HANDBOOK OF SMALL TOOLS

COMPRISING

THREADING TOOLS, TAPS, DIES, CUTTERS, DRILLS, AND REAMERS

TOGETHER WITH A COMPLETE TREATISE ON

SCREW-THREAD SYSTEMS

BY

ERIK OBERG

Associate Editor of "Machinery," Author of
"Shop Arithmetic for the Machinist"

FIRST EDITION
FIRST THOUSAND

NEW YORK
JOHN WILEY & SONS
LONDON: CHAPMAN & HALL, LIMITED
1908

Stanhope Press
F. H. GILSON COMPANY
BOSTON, U.S.A.

PREFACE.

In the following pages the author has endeavored to present an original and, as far as possible, complete treatise on the design and construction of small cutting tools, such as threading tools, taps, dies, milling cutters of all classes, reamers, drills, counterbores, hollow mills, etc. The material has been prepared with special regard to the requirements of the tool-maker, tool draftsman, foreman, inspector, and superintendent, for specific information relating to tools of the class mentioned. The immediate reason for the placing of this book on the market is the lack of definite data on this class of work in existing treatises on shop practice, and the book has been written to supply a distinct demand in this direction. The author also wishes to emphasize the fact that the information given is authentic, and that the book places on record the most modern practice in tool manufacture, the experience gained by him during several years connection with one of the foremost tool-making firms in the country, the Pratt & Whitney Company, being the basis of the treatise.

In arranging the material, a great deal of space has been devoted to tables, formulas, and general data, giving the tool-maker and the designer of tools specific working figures; and while methods and processes have not been neglected, the author's personal experience has been that the demand of the tool-making trade is for directions *what to do* rather than *how to do it*. An effort has been made to prepare the material for this book so as to give specifically, in plain figures, in tables, and in formulas, the desired information. While the book is of a practical character, and intended for the use of practical men, theoretical considerations have not been overlooked, and formulas and deductions of formulas are included whereever considered advisable. Those who have no interest in the deduction or use of formulas will find the results sought for directly in the tables, without calculations. The portion of Chapter II devoted to change gearing for the lathe has been prepared with the intention of presenting this matter in as simple a manner as possible, in order to meet the requirements of those whose knowledge of mathematics is limited; hence the rather extended and elementary treatment of this subject.

The majority of the tables are original, and have never been published before, except those which have appeared under the author's name in *Machinery*, in which, in the form of separate articles, a great deal of the material has already been published. In the preparation of the material the author has also made use of some portions of articles contributed from time to time to *Machinery* by Mr. A. L. Valentine, Mr. E. R. Markham, and Mr. A. E. Johnson, and credit is here given to these writers.

The author is also under obligation to the publishers of *Machinery* for the use of a considerable number of engravings and for permission to use several articles previously contributed by him to this journal, and copyrighted by The Industrial Press, publishers of *Machinery*.

ERIK OBERG.

BROOKLYN, N. Y., *November*, 1908.

CONTENTS.

CHAPTER I.

SCREW-THREAD SYSTEMS.

CHAPTER II.

METHODS AND PRINCIPLES OF THREAD-CUTTING.—MEASURING THREADS.

CHAPTER III.

THREADING TOOLS.—DEFINITIONS OF TAPS.

CHAPTER IV.

HAND TAPS.

CHAPTER V.

TAPPER TAPS AND MACHINE TAPS.—SCREW MACHINE TAPS.—HOBS AND DIE TAPS.

CHAPTER VI.

TAPER TAPS.—MISCELLANEOUS TAPS.

CHAPTER VII.

THREADING DIES.

CHAPTER VIII.

PLAIN AND SIDE MILLING CUTTERS.

CHAPTER IX.

MISCELLANEOUS MILLING CUTTERS.

CHAPTER X.

REAMERS.

CHAPTER XI.

DRILLS. — COUNTERBORES. — HOLLOW MILLS. — LATHE ARBORS.

SMALL TOOLS.

CHAPTER I.

SCREW-THREAD SYSTEMS.

INTRODUCTORY.

NOTWITHSTANDING all that has been written about standard screw-thread systems, data which completely cover all the recognized standards are very scattered, and it is often necessary to search for information in many various handbooks and works of reference. For this reason we will of necessity, before entering upon the subject of taps and tap-making, devote our attention to the different kinds and systems of thread in common use. While a great many more systems than we will review in the following have been proposed from time to time, only those which are mentioned below have been officially recognized by mechanical men, or gained prestige by means of universal use and adoption. It will be found that the list given embraces all standards, whether in use principally in the United States, in Great Britain, or on the European continent. Any one having to do with tool-making, and, of course, tap-making in particular, must be equally familiar with the systems abroad as with those of this country, because the trade relations between the United States and Great Britain and the continent make it necessary to produce a great number of tools in this country, made in accordance with the systems in vogue in the country where the tools are to be used. The recognized British standards are also used to a great extent by machine builders in this country, and even the number of American manufacturers who introduce what is termed the French and International standards in their establishments is steadily growing. To question the advisability of such a course is not within the limitations of this treatise, but the fact is referred to merely in order to point out the universal use of all the standard systems of screw threads, and to call attention to the necessity of a complete record of the peculiarities of each system.

STANDARD SYSTEMS.

The most common systems which will be treated in detail in the following pages are:

The United States standard thread,
The sharp V-thread,
The Whitworth standard thread,
The British standard fine screw thread,
The British Association standard thread,
The Briggs standard pipe thread,
The Whitworth standard thread for gas and water piping,
The square thread,
The Acme thread, and finally
The French and International standard threads.

THE UNITED STATES STANDARD THREAD.

The United States standard thread, usually denoted U. S. S., has a cross section as shown in Fig. 1. The sides of the thread form an angle of 60 degrees with one another. The top and bottom of the thread are flattened, the width of the flat in both cases being equal to one-eighth of the pitch of the thread. In this connection it may be appropriate to define the expression "pitch" as well as "lead," as these two are often confused and the word "pitch," in particular, often, though improperly, used in place of "number of threads per inch." The pitch of a thread is the distance from center to center of two adjacent threads. It is equal to the reciprocal value of the number of threads per inch, or, if expressed in a formula,

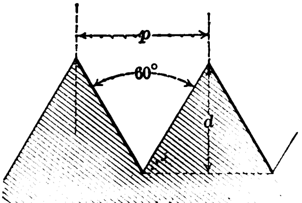

SHARP V
Fig. 1. ~~United States~~ Standard Thread

$$\text{pitch} = \frac{1}{\text{number of threads per inch}}.$$

If, for instance, the number of threads per inch in a certain case is 16, then

$$\text{pitch} = \frac{1}{16} = 0.0625 \text{ inch.}$$

The lead of a screw thread is the distance the screw will travel forward if turned around one complete revolution. It is evident that for a single-threaded screw the pitch and the lead are equal. If the screw is provided with a double thread, then the lead is equal to two times the pitch. These definitions should be strictly adhered to, as great confusion is often caused by the different meanings being given to the expressions "pitch" and "lead."

If we now return to the United States standard thread, we will notice that if the thread is flattened one-eighth of the pitch at top and bottom, the depth of the thread is equal to three-quarters of the depth of a corresponding thread sharp both at top and bottom. If p equals the pitch of the thread, d the depth, and f the width of the flat, we can express the relation between these quantities in the following formulas:

$$p = \frac{1}{\text{number of threads per inch}},$$

$$d = \frac{3}{4} \times p \times \cos 30° = 0.64952\, p,$$

$$f = \frac{p}{8}.$$

Assuming again a case with 16 threads per inch, we find by using our formulas,

$$\text{depth of thread} = 0.64952 \times \frac{1}{16} = 0.0406 \text{ inch},$$

and the width of the flat $= \dfrac{\frac{1}{16}}{8} = 0.0078$ inch.

In Table I the depth of the thread and the width of the flat for the most common number of threads per inch are given. A column is also given for the double depth of the thread. This quantity is of value when wanting to find the root diameter of the thread, this diameter evidently being equal to the outside or standard diameter less the double depth of the thread. As this figure therefore is of particular importance it is given in all the following tables for various forms of thread.

There will be noticed in some cases in Table I apparent errors in the last decimal figure in the column for the double depth of the thread, this figure not being in all cases exactly two times the figure for the depth of the thread as stated in the second column. This depends, of course, upon that the figures given are not even decimal values, and in all cases wherever the fifth decimal, which is not given, is above 5, the fourth figure is raised to the nearest higher digit.

TABLE I.

ELEMENTS OF THE UNITED STATES STANDARD THREAD.

No. of Threads per Inch.	Depth of Thread.	Width of Flat.	Double Depth of Thread.	No. of Threads per Inch.	Depth of Thread.	Width of Flat.	Double Depth of Thread.
2¼	0.2887	0.0556	0.5774	18	0.0361	0.0069	0.0722
2⅜	0.2735	0.0526	0.5470	20	0.0325	0.0062	0.0650
2½	0.2598	0.0500	0.5196	22	0.0295	0.0057	0.0590
2⅝	0.2474	0.0476	0.4949	24	0.0271	0.0052	0.0541
2¾	0.2362	0.0455	0.4724	26	0.0250	0.0048	0.0500
2⅞	0.2259	0.0435	0.4518	28	0.0232	0.0045	0.0464
3	0.2165	0.0417	0.4330	30	0.0217	0.0042	0.0433
3¼	0.1999	0.0385	0.3997	32	0.0203	0.0039	0.0406
3½	0.1856	0.0357	0.3712	34	0.0191	0.0037	0.0382
4	0.1624	0.0312	0.3248	36	0.0180	0.0035	0.0361
4½	0.1443	0.0278	0.2887	38	0.0171	0.0033	0.0342
5	0.1299	0.0250	0.2598	40	0.0162	0.0031	0.0325
5½	0.1181	0.0227	0.2362	42	0.0155	0.0030	0.0309
6	0.1083	0.0208	0.2165	44	0.0148	0.0028	0.0295
7	0.0928	0.0179	0.1856	46	0.0141	0.0027	0.0282
8	0.0812	0.0156	0.1624	48	0.0135	0.0026	0.0271
9	0.0722	0.0139	0.1443	50	0.0130	0.0025	0.0260
10	0.0650	0.0125	0.1299	52	0.0125	0.0024	0.0250
11	0.0590	0.0114	0.1181	56	0.0116	0.0022	0.0232
12	0.0541	0.0104	0.1083	60	0.0108	0.0021	0.0217
13	0.0500	0.0096	0.0999	64	0.0101	0.0020	0.0203
14	0.0464	0.0089	0.0928	68	0.0096	0.0018	0.0191
15	0.0433	0.0083	0.0866	72	0.0090	0.0017	0.0180
16	0.0406	0.0078	0.0812	80	0.0081	0.0016	0.0162

In Table II are given the number of threads per inch corresponding to a given diameter, as well as the root diameter for all standard screws. When denoting that a certain thread is to be of the same shape as the United States standard, but the number of threads per inch is not in accordance with the standard number of threads for the diameter in question, it is usual to state the number of threads and add "United States Form," U. S. F. Thus, while 1½ — U. S. S. means a tap or a screw 1½ inches in diameter with 6 threads per inch, this being the standard number for this diameter, if 12 threads per inch are wanted, the tap or screw would be denoted 1½ — 12 U. S. F. The United States standard thread is sometimes, though at the present time rarely, called the Sellers thread, naming it from its originator, Mr. William Sellers.

TABLE II.

NUMBER OF THREADS PER INCH CORRESPONDING TO A GIVEN DIAMETER.

United States Standard Thread.

Diameter.	No. of Threads.	Diameter at Root of Thread.	Diameter.	No. of Threads.	Diameter at Root of Thread.
1/16	64	0.0422	1 3/4	5	1.4902
3/32	50	0.0678	1 13/16	5	1.5527
1/8	40	0.0925	1 7/8	5	1.6152
5/32	36	0.1202	1 15/16	5	1.6777
3/16	32	0.1469	2	4 1/2	1.7113
7/32	28	0.1724	2 1/8	4 1/2	1.8363
1/4	20	0.1850	2 1/4	4 1/2	1.9613
5/16	18	0.2403	2 3/8	4	2.0502
3/8	16	0.2938	2 1/2	4	2.1752
7/16	14	0.3447	2 5/8	4	2.3002
1/2	13	0.4001	2 3/4	4	2.4252
9/16	12	0.4542	2 7/8	3 1/2	2.5038
5/8	11	0.5069	3	3 1/2	2.6288
11/16	11	0.5694	3 1/8	3 1/2	2.7538
3/4	10	0.6201	3 1/4	3 1/2	2.8788
13/16	10	0.6826	3 3/8	3 1/4	2.9753
7/8	9	0.7307	3 1/2	3 1/4	3.1003
15/16	9	0.7932	3 5/8	3 1/4	3.2253
1	8	0.8376	3 3/4	3	3.3170
1 1/16	7	0.8769	3 7/8	3	3.4420
1 1/8	7	0.9394	4	3	3.5670
1 3/16	7	1.0019	4 1/4	2 7/8	3.7982
1 1/4	7	1.0644	4 1/2	2 3/4	4.0276
1 5/16	6	1.0960	4 3/4	2 5/8	4.2551
1 3/8	6	1.1585	5	2 1/2	4.4804
1 7/16	6	1.2210	5 1/4	2 1/2	4.7304
1 1/2	6	1.2835	5 1/2	2 3/8	4.9530
1 9/16	5 1/2	1.3263	5 3/4	2 3/8	5.2030
1 5/8	5 1/2	1.3888	6	2 1/4	5.4226
1 11/16	5 1/2	1.4513	....	....	....

FORMULAS FOR DETERMINING THE NUMBER OF THREADS PER INCH.

In order to fix definitely the proper number of threads per inch for any given diameter of screw in the United States standard system, the following formula is used:

$$p = 0.24\sqrt{D + 0.625} - 0.175,$$

in which formula p equals the pitch of the thread for any bolt or screw of the diameter D. To illustrate the use of this formula, we take, for example, a two-inch bolt, and by proper substitution we find

$$\begin{aligned} p &= 0.24\sqrt{2 + 0.625} - 0.175 \\ &= 0.2138 \text{ inch.} \end{aligned}$$

The reciprocal value of this, or

$$\frac{1}{0.2138} = 4.68,$$

is the proper number of threads per inch for a two-inch bolt. It is evident that the fraction is not used in such a form, but is approximated by the value 4½ threads per inch, as otherwise the screw-cutting operation and selection of change gears would be altogether too complicated.

The formula given above is the one originally proposed by William Sellers, the originator of the United States standard thread. It is applicable to all screws one-quarter inch and larger in diameter. For diameters below one-quarter inch the formula should be changed to

$$p = 0.23\sqrt{D + 0.625} - 0.175.$$

The modification above, which has met with general acceptance, changing the coefficient 0.24 to 0.23, was proposed by Mr. George M. Bond in 1882. The purpose of the change was to make the formula applicable to screw threads for bolts which are smaller in diameter than one-quarter inch, inasmuch as Mr. Bond's formula tends to increase the number of threads per inch more rapidly as the diameter decreases than is found to result from the use of the original formula.

It will be proper to remark in this connection that screws $\frac{11}{16}$, $\frac{13}{16}$, and $\frac{15}{16}$ inch in diameter according to the formula ought to have 10, 9, and 8 threads per inch respectively, but in Table II the number of threads is given as 11, 10, and 9, because this conforms with the usual manufacturing practice.

PRINCIPAL REQUIREMENTS FOR A DESIRABLE SCREW THREAD.

The principal requirements for a screw thread, and in fact the required conditions which led to the adoption of the United States standard thread, are as follows:

1. That it shall possess a strength that, in the length or depth of a nut, shall be equal to the strength of the weakest part of the bolt, which, of course, is at the bottom of the thread of the screw.
2. That the tools required to produce the thread shall be easily made, and shall not appreciably change their form by reason of wear.
3. That these tools shall be capable of being easily sharpened, and set to the correct position in a lathe.
4. That a minimum of measuring and gauging shall be required to test the diameter and form of the thread.
5. That the angles of the sides shall be as acute as consistent with required strength.
6. That the thread shall not be unduly liable to become loose in cases where the nut may require to be fastened and loosened occasionally.

From the comparisons which we shall make in the following between the United States and other kinds of threads it will be apparent that the former thread form fills the requirements better than any other kind of thread hitherto proposed.

THE SHARP V-THREAD.

The sharp V-Thread, a diagram of which is shown in Fig. 2, is very similar to the United States standard thread, except that theoretically it is not provided with any flat either at the top or bottom of the thread. In common practice, however, it has proven necessary to provide this thread with a slight flat on the top of the thread. Several reasons may be mentioned necessitating this. In the first place, it is very difficult to produce a perfectly sharp edge on the top of the thread, and, in the case of a tap, the sharp edge would be very likely to be impaired in hardening, leaving the top of the thread less perfect than if provided with a slight, uniform flat. In the second place, the sharp edge would wear away very rapidly, both in the case of a tap and a screw, and as the wear could not be expected to be uniform, the ultimate result would be far less desirable than the one obtained by slightly flattening the top of the thread from the beginning.

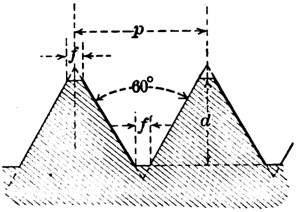

Fig. 2. ~~**Sharp**~~ **V-Thread**
U.S.S.

The necessity of providing the sharp V-thread with a flat at the top of the thread has, however, caused some difficulty. A standard outside diameter must necessarily be adhered to, and if then a flat is provided, there must be an increase in the angle diameter of the thread, or the diameter measured halfway between the theoretical top and bottom of the thread as shown in Fig. 3. This diameter is evidently of the greatest importance, since it is obvious that if there are any variations in this dimension it will directly influence the fit between the screw and the nut. Inasmuch as there is no recognized standard as to how much of a flat the top of the thread ought to be provided with, various manufacturers each have their own practice in this particular, which necessarily causes much confusion. The gauges made by one firm do not always correspond to the taps manufactured by another. The question is still more confusing on account of the fact that many manufacturers do not even have a definite standard for all gauges and taps manufactured by them, but working to their old established plug gauges often produce large taps with smaller flats on the top of the thread, proportionally, than the flats on smaller taps. The conditions mentioned are evidently a serious drawback in regard to the sharp V-thread, and it is to be expected that the manufacturers as well as the users of

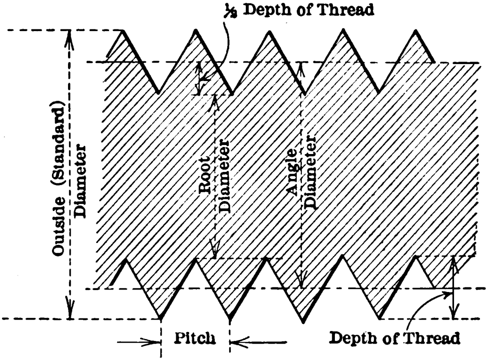

Fig. 3. Definitions of Screw-Thread Terms

taps with sharp V-thread will before long settle upon a definite standard. Some manufacturers have used the same flat for the sharp V-thread as is used for the Briggs standard pipe tap thread, which, although theoretically rounded at top and bottom, is, in this country at least, made with a small flat on the top of the thread. The width of this flat is selected so as to give exactly the same angle diameter as is obtained when rounding the top of the thread in accordance with Briggs' original proposition. This flat is equal to about one-twenty-fifth of the pitch.

TABLE III.

ELEMENTS OF THE SHARP V-THREAD.

No. of Threads per Inch.	Depth of Thread.	Width of Flat.	Double Depth of Thread.	No. of Threads per Inch.	Depth of Thread.	Width of Flat.	Double Depth of Thread.
2¼	0.3849	0.0178	0.7698	18	0.0481	0.0022	0.0962
2⅜	0.3646	0.0168	0.7293	20	0.0433	0.0020	0.0866
2½	0.3464	0.0160	0.6928	22	0.0394	0.0018	0.0787
2⅝	0.3299	0.0152	0.6598	24	0.0361	0.0017	0.0722
2¾	0.3149	0.0145	0.6298	26	0.0333	0.0015	0.0666
2⅞	0.3012	0.0139	0.6025	28	0.0309	0.0014	0.0619
3	0.2887	0.0133	0.5774	30	0.0289	0.0013	0.0577
3¼	0.2665	0.0123	0.5329	32	0.0271	0.0012	0.0541
3½	0.2474	0.0114	0.4949	34	0.0255	0.0012	0.0509
4	0.2165	0.0100	0.4330	36	0.0241	0.0011	0.0481
4½	0.1925	0.0089	0.3849	38	0.0228	0.0011	0.0456
5	0.1732	0.0080	0.3464	40	0.0217	0.0010	0.0433
5½	0.1575	0.0073	0.3149	42	0.0206	0.0010	0.0412
6	0.1443	0.0067	0.2887	44	0.0197	0.0009	0.0394
7	0.1237	0.0057	0.2474	46	0.0188	0.0009	0.0377
8	0.1083	0.0050	0.2165	48	0.0180	0.0008	0.0361
9	0.0962	0.0044	0.1925	50	0.0173	0.0008	0.0346
10	0.0866	0.0040	0.1732	52	0.0167	0.0008	0.0333
11	0.0787	0.0036	0.1575	56	0.0155	0.0007	0.0309
12	0.0722	0.0033	0.1443	60	0.0144	0.0007	0.0289
13	0.0666	0.0031	0.1332	64	0.0135	0.0006	0.0271
14	0.0619	0.0029	0.1237	68	0.0127	0.0006	0.0255
15	0.0577	0.0027	0.1155	72	0.0120	0.0006	0.0241
16	0.0541	0.0025	0.1083	80	0.0108	0.0005	0.0217

In Table III the depth of the thread and the flat for various pitches, as figured from the formulas below, are given. The standard pitches corresponding to certain diameters are stated in Table IV in the same manner as for the United States standard thread. In the formulas p equals the pitch, d the depth, and f the flat on the top of the thread.

$$p = \frac{1}{\text{number of threads per inch}},$$

$$d = p \times \cos 30^\circ = 0.86603\,p,$$

$$f = \frac{p}{25}.$$

TABLE IV.

NUMBER OF THREADS PER INCH CORRESPONDING TO A GIVEN DIAMETER.

Sharp V-Thread.

Diameter.	No. of Threads.	Diameter at Root of Thread.	Diameter.	No. of Threads.	Diameter at Root of Thread.
$\frac{1}{16}$	72	0.0384	$1\frac{3}{4}$	5	1.4036
$\frac{3}{32}$	56	0.0628	$1\frac{13}{16}$	5	1.4661
$\frac{1}{8}$	40	0.0817	$1\frac{7}{8}$	$4\frac{1}{2}$	1.4901
$\frac{5}{32}$	32	0.1021	$1\frac{15}{16}$	$4\frac{1}{2}$	1.5526
$\frac{3}{16}$	24	0.1153	2	$4\frac{1}{2}$	1.6151
$\frac{7}{32}$	24	0.1465	$2\frac{1}{8}$	$4\frac{1}{2}$	1.7401
$\frac{1}{4}$	20	0.1634	$2\frac{1}{4}$	$4\frac{1}{2}$	1.8651
$\frac{5}{16}$	18	0.2163	$2\frac{3}{8}$	$4\frac{1}{2}$	1.9901
$\frac{3}{8}$	16	0.2667	$2\frac{1}{2}$	4	2.0670
$\frac{7}{16}$	14	0.3138	$2\frac{5}{8}$	4	2.1920
$\frac{1}{2}$	12	0.3557	$2\frac{3}{4}$	4	2.3170
$\frac{9}{16}$	12	0.4182	$2\frac{7}{8}$	4	2.4420
$\frac{5}{8}$	11	0.4675	3	$3\frac{1}{2}$	2.5051
$\frac{11}{16}$	11	0.5300	$3\frac{1}{8}$	$3\frac{1}{2}$	2.6301
$\frac{3}{4}$	10	0.5768	$3\frac{1}{4}$	$3\frac{1}{2}$	2.7551
$\frac{13}{16}$	10	0.6393	$3\frac{3}{8}$	$3\frac{1}{4}$	2.8421
$\frac{7}{8}$	9	0.6825	$3\frac{1}{2}$	$3\frac{1}{4}$	2.9671
$\frac{15}{16}$	9	0.7450	$3\frac{5}{8}$	$3\frac{1}{4}$	3.0921
1	8	0.7835	$3\frac{3}{4}$	3	3.1726
$1\frac{1}{16}$	8	0.8460	$3\frac{7}{8}$	3	3.2976
$1\frac{1}{8}$	7	0.8776	4	3	3.4226
$1\frac{3}{16}$	7	0.9401	$4\frac{1}{4}$	$2\frac{7}{8}$	3.6475
$1\frac{1}{4}$	7	1.0026	$4\frac{1}{2}$	$2\frac{3}{4}$	3.8702
$1\frac{5}{16}$	7	1.0651	$4\frac{3}{4}$	$2\frac{5}{8}$	4.0902
$1\frac{3}{8}$	6	1.0863	5	$2\frac{1}{2}$	4.3072
$1\frac{7}{16}$	6	1.1488	$5\frac{1}{4}$	$2\frac{1}{2}$	4.5572
$1\frac{1}{2}$	6	1.2113	$5\frac{1}{2}$	$2\frac{3}{8}$	4.7707
$1\frac{9}{16}$	6	1.2738	$5\frac{3}{4}$	$2\frac{3}{8}$	5.0207
$1\frac{5}{8}$	5	1.2786	6	$2\frac{1}{4}$	5.2302
$1\frac{11}{16}$	5	1.3411	....	....	....

In applying these formulas let us assume a case of a screw with 12 threads per inch. We then find:

$$\text{depth of thread} = 0.86603 \times \frac{1}{12} = 0.0722 \text{ inch, and}$$

$$\text{flat on top of thread} = \frac{\frac{1}{12}}{25} = \frac{1}{300} = 0.0033 \text{ inch.}$$

Attention must be called to the fact that the formula for the width of the flat is selected simply to give an arbitrary value, which is *not* recognized as *any standard element* of the sharp V-thread. In figuring the depth of the thread this flat is disregarded, and the depth is arrived at as if the thread were exactly sharp.

COMPARISON BETWEEN THE UNITED STATES STANDARD AND THE SHARP V-THREAD.

The two standards referred to hitherto are the two forms of thread most commonly used in the United States. The objection to the sharp V-thread as compared with the United States standard thread is that the comparatively sharp points of the teeth are very frail and liable to injury from contact with other objects. The groove at the bottom of the thread also being sharp, facilitates fracture under strain, and is a source of weakness in the screw. The depth of the thread being considerably greater than that of the United States standard thread, subtracts from the effective area of the screw, or the sectional area at the bottom of the thread, thus impairing the tensile strength of the threaded bolt. It is true that the V-thread in itself is a trifle stronger than the United States standard thread, but the increased danger of a screw with the latter form of thread failing, due to the threads stripping, as compared with that of a screw with sharp V-threads, is more apparent than real, as experience has shown that a screw with a full United States standard thread will fail almost invariably by breaking across the diameter at the bottom of the threads before the threads themselves will shear or strip.

Experiments carried out with the object of determining the exact relation between the strength of the two forms of thread in question have proven that smaller screws provided with the United States standard thread have approximately one-quarter more strength, medium-sized ones one-sixth more, and larger ones one-eighth more strength to resist tension than screws having an ordinary sharp V-thread. The resistance to torsion of screws with the former thread is about one-third, one-quarter, and one-fifth greater, respectively, than those provided with a sharp V-thread.

THE ADVANTAGE OF FINE PITCHES.

Another valuable feature of the United States standard thread as compared with the sharp V-thread is the greater endurance or life of a tap provided with the former thread and the greater duty of which it is capable, owing to the liberal flats at the top and bottom of the thread. Still another feature of superiority of the former system is the tendency in some sizes to employ finer pitches than those of the V-thread. This can be easily seen in regard to a number of sizes by referring to Tables II and IV. It may be well to point out that even the pitches of the United States standard thread are rather coarse for many purposes, and manufacturers of special machinery are inclined to modify the system. If this could be done in such a way that a recognized system with finer threads could be universally adopted, to be used in cases where the United States standard proved too coarse, then all would be well.

But if various branches of manufacturers adopt standards of their own, great confusion will result. In Great Britain, as we will see later, great pains have been taken to establish a system of fine screw threads, to be used in special cases as a substitute for the regular Whitworth thread. This system of fine screw threads promises to be generally adopted. Such an organized effort should be effected in this country in regard to the United States standard thread, so that, while both the form and the number of threads per inch corresponding to certain diameters are retained for such purposes, where they prove effective, in accordance with the original system, a series of finer pitches with the same thread form should also be adopted to be used where the coarser thread does not answer the purpose as well.

One such system has been proposed and adopted by the Association of Licensed Automobile Manufacturers. As this system has been favored only by a limited group of manufacturers it can hardly be classed with the standard systems of thread. We will, however, return to this subject later and give more detailed information regarding this system.

POINTS OF ADVANTAGE OF THE SHARP V-THREAD.

In spite of all that we have said in favor of the United States standard thread, the sharp V-thread will long continue to be in general use, due primarily to the fact that it has so thoroughly established itself in the mechanical industries. This form of thread has also another strong claim because of being admirably adapted to the making of steam-tight joints. It answers this purpose best, perhaps, of all common forms of thread, and all patch-bolt taps, boiler taps, stay-bolt taps, and arch-pipe taps are as a rule provided with a sharp V-thread. There is no variation of any consequence at the top and bottom of the thread, as there may be in the United States standard form of thread, with the resulting liability of leakage through the clearance thus formed.

THREADS FOR MACHINE SCREWS.

The sharp V-thread is also used for machine screws. In these screws, however, while the bottom of the thread is sharp, the top is flattened considerably. No data can be given for this latter flat, as it does not conform to any system or standard, the flat being large or small only to conform to the manufacturer's once established gauges. There has been, however, a strong movement for adopting the United States standard thread form for machine screws, which, of course, would be of great advantage. The only objection to using this thread form for small screws is that flattening only one-eighth of the depth of a full V-thread provides practically a sharp thread on very fine pitches, and a larger proportion than one to eight between the width of the flat and the pitch of the thread would be desirable in such cases. The standard proportions for machine screw threads adopted by the American Society of Mechanical Engineers fills this requirement, and we will return to this system later.

THE WHITWORTH STANDARD THREAD.

The Whitworth standard thread is used chiefly in Great Britain, but to a certain extent also in the United States. Its use here, however, has greatly diminished since the United States standard thread commenced to gain general approval. The Whitworth standard is the older one of the two, and is the first recognized screw thread system. For this reason as well as for its decided merits, which will be referred to later, it commands close attention.

In the Whitworth standard the sides of the thread form an angle of 55 degrees with one another. The top and the bottom of the thread are rounded as shown in Fig. 4. The radii for these rounded portions are determined by the depth of the thread, which is two-thirds of the depth of a thread of the same angle, sharp at top and bottom. The radii at the top and at the bottom are the same. If p and d mean the pitch and the depth of the thread, respectively, and r the radius of the top or bottom,

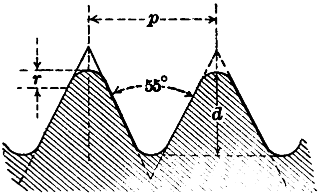

Fig. 4. Whitworth Standard Thread.

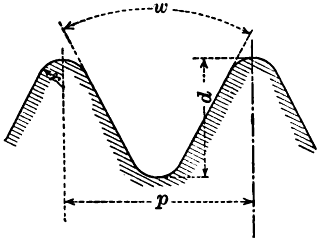

Fig. 5.

$$d = \frac{2}{3} \times \frac{p}{2} \times \cot 27^\circ\, 30' = 0.64033\, p,$$

$$r = 0.1373\, p.^*$$

---

* In any thread system where the thread is rounded at top and bottom, the radius can be determined by the formula given below, if the pitch, the depth of the thread, and the angle between the sides of the thread are given. Let

p = pitch of thread,
d = depth of thread,
w = inclusive angle of thread, and
r = radius at top and bottom. (See Fig. 5.)

Then

$$r = \frac{\left(\frac{p}{4}\cot\frac{w}{2} - \frac{d}{2}\right)\sin\frac{w}{2}}{1 - \sin\frac{w}{2}}.$$

As an example of the application of this formula let us figure the radius required for a Whitworth thread having say 10 threads to the

TABLE V.

ELEMENTS OF WHITWORTH STANDARD THREAD.

No. of Threads per Inch.	Depth of Thread.	Radius.	Double Depth of Thread.	No. of Threads per Inch.	Depth of Thread.	Radius.	Double Depth of Thread.
2¼	0.2846	0.0610	0.5692	18	0.0356	0.0076	0.0711
2⅜	0.2696	0.0578	0.5392	20	0.0320	0.0069	0.0640
2½	0.2561	0.0549	0.5123	22	0.0291	0.0062	0.0582
2⅝	0.2439	0.0523	0.4879	24	0.0267	0.0057	0.0534
2¾	0.2328	0.0499	0.4657	26	0.0246	0.0053	0.0493
2⅞	0.2227	0.0478	0.4454	28	0.0229	0.0049	0.0457
3	0.2134	0.0458	0.4269	30	0.0213	0.0046	0.0427
3¼	0.1970	0.0422	0.3940	32	0.0200	0.0043	0.0400
3½	0.1830	0.0392	0.3659	34	0.0188	0.0040	0.0377
4	0.1601	0.0343	0.3202	36	0.0178	0.0038	0.0356
4½	0.1423	0.0305	0.2846	38	0.0169	0.0036	0.0337
5	0.1281	0.0275	0.2561	40	0.0160	0.0034	0.0320
5½	0.1164	0.0250	0.2328	42	0.0152	0.0033	0.0305
6	0.1067	0.0229	0.2134	44	0.0146	0.0031	0.0291
7	0.0915	0.0196	0.1830	46	0.0139	0.0030	0.0278
8	0.0800	0.0172	0.1601	48	0.0133	0.0029	0.0267
9	0.0711	0.0153	0.1423	50	0.0128	0.0027	0.0256
10	0.0640	0.0137	0.1281	52	0.0123	0.0026	0.0246
11	0.0582	0.0125	0.1164	56	0.0114	0.0025	0.0229
12	0.0534	0.0114	0.1067	60	0.0107	0.0023	0.0213
13	0.0493	0.0106	0.0985	64	0.0100	0.0021	0.0200
14	0.0457	0.0098	0.0915	68	0.0094	0.0020	0.0188
15	0.0427	0.0092	0.0854	72	0.0089	0.0019	0.0178
16	0.0400	0.0086	0.0800	80	0.0080	0.0017	0.0160

inch. The pitch, p, is 0.1; the depth of the thread, d, according to the formula given for the depth of Whitworth threads is 0.064; the angle, w, is 55 degrees. The

$$\text{radius} = \frac{\left[\frac{0.1}{4}\cot\left(\frac{55}{2}\right)^{\circ} - \frac{0.064}{2}\right]\sin\left(\frac{55}{2}\right)^{\circ}}{1 - \sin\left(\frac{55}{2}\right)^{\circ}}.$$

Carrying out this calculation we find

$$\text{radius} = 0.0137,$$

which corresponds to the result which would have been obtained from the simplified formula

$$r = 0.1373\,p$$

already given for the radius of the Whitworth thread.

If we apply these formulas to the case of a screw with 8 threads per inch, we find:

$$\text{depth of thread} = 0.64033 \times \frac{1}{8} = 0.0800 \text{ inch, and}$$

$$\text{radius at top and bottom} = 0.1373 \times \frac{1}{8} = 0.0172 \text{ inch.}$$

The values of *d* and *r* are given in Table V for different numbers of threads per inch. Table VI gives the number of threads per inch corresponding to different diameters.

TABLE VI.

NUMBER OF THREADS PER INCH CORRESPONDING TO A GIVEN DIAMETER.

Whitworth Standard Thread.

Diameter.	No. of Threads.	Diameter at Root of Thread.	Diameter.	No. of Threads.	Diameter at Root of Thread.
1/16	60	0.0412	1 3/4	5	1.4939
3/32	48	0.0670	1 13/16	5	1.5564
1/8	40	0.0930	1 7/8	4 1/2	1.5904
5/32	32	0.1162	1 15/16	4 1/2	1.6529
3/16	24	0.1341	2	4 1/2	1.7154
7/32	24	0.1653	2 1/8	4 1/2	1.8404
1/4	20	0.1860	2 1/4	4	1.9298
5/16	18	0.2414	2 3/8	4	2.0548
3/8	16	0.2950	2 1/2	4	2.1798
7/16	14	0.3460	2 5/8	4	2.3048
1/2	12	0.3933	2 3/4	3 1/2	2.3841
9/16	12	0.4558	2 7/8	3 1/2	2.5091
5/8	11	0.5086	3	3 1/2	2.6341
11/16	11	0.5711	3 1/8	3 1/2	2.7591
3/4	10	0.6219	3 1/4	3 1/4	2.8560
13/16	10	0.6844	3 3/8	3 1/4	2.9810
7/8	9	0.7327	3 1/2	3 1/4	3.1060
15/16	9	0.7952	3 5/8	3 1/4	3.2310
1	8	0.8399	3 3/4	3	3.3231
1 1/16	8	0.9024	3 7/8	3	3.4481
1 1/8	7	0.9420	4	3	3.5731
1 3/16	7	1.0045	4 1/4	2 7/8	3.8046
1 1/4	7	1.0670	4 1/2	2 7/8	4.0546
1 5/16	7	1.1295	4 3/4	2 3/4	4.2843
1 3/8	6	1.1616	5	2 3/4	4.5343
1 7/16	6	1.2241	5 1/4	2 5/8	4.7621
1 1/2	6	1.2866	5 1/2	2 5/8	5.0121
1 9/16	6	1.3491	5 3/4	2 1/2	5.2377
1 5/8	5	1.3689	6	2 1/2	5.4877
1 11/16	5	1.4314	....	....	....

ADVANTAGES AND DISADVANTAGES OF THE WHITWORTH THREAD.

The Whitworth form of thread has two points of merit that commend it highly where heavy service is required. First, screws with this form of thread have all of the strength possessed by screws with United States standard threads, with the advantage over the latter of having no sharp edges or corners from which fractures may start. Secondly, screws and nuts with this form of thread will work well together after continued heavy service where the other forms of thread would fail. Whitworth threads are used in the United States chiefly on special screws, such, for instance, as screws for gasoline needle valves where a liquid-tight and yet working fit is desired. It is also often used for locomotive boiler stay bolts.

The objections to the Whitworth form of thread are that the angle of 55 degrees cannot be measured or simply laid out with ordinary tools, and that the rounded corners at the top and the bottom of the threads are extremely difficult to produce with the degree of precision required in tools for thread cutting. Here the United States standard thread has a decided advantage, as the angle is easily obtained, and the flat at the top and bottom of the thread can be easily and accurately made. The Whitworth standard thread system is denoted B. S. W. (British Standard Whitworth screw thread) in Great Britain, where it is the recognized standard.

THE BRITISH STANDARD FINE SCREW THREAD.

The British Standard fine screw thread is a system of threads recently adopted in Great Britain. The form of the thread is the same as that for the Whitworth standard, but there is a greater number of threads per inch corresponding to a certain diameter than in the Whitworth system. The fine screw-thread system is denoted B. S. F., and applies to screws one-quarter inch in diameter and larger. The reason for adopting this standard was founded on the complaints of many manufacturers that the regular Whitworth standard gave altogether too coarse pitches for a number of purposes, and while the old system was well adapted for a variety of constructions, it was not the best obtainable for those designs where shocks and vibrations had to be taken into consideration.

The pitches for the system of fine screw threads are based approximately on the formula

$P = \frac{\sqrt[3]{d^2}}{10}$ for sizes up to and including one inch; and

on the formula

$P = \frac{\sqrt[8]{d^5}}{10}$ for sizes larger than one inch in diameter.

In the above formulas

P = pitch, or lead of single-threaded screw,
d = diameter of screw.

As an example of the application of these formulas let us find the required number of threads per inch for a half-inch and a 3-inch screw. In the former case the first formula would be used:

$$\text{Pitch} = \frac{\sqrt[3]{(\frac{1}{2})^2}}{10} = \frac{\sqrt[3]{0.25}}{10} = \frac{0.630}{10} = 0.063 \text{ inch.}$$

The number of threads per inch $= \frac{1}{\text{pitch}} = \frac{1}{0.063} = 16$ (approx.).

In order to find the number of threads per inch for a 3-inch screw we employ the second formula given:

$$\text{Pitch} = \frac{\sqrt[8]{3^5}}{10} = \frac{\sqrt[8]{243}}{10} = \frac{1.99}{10} = 0.199 \text{ inch.}$$

The number of threads per inch $= \frac{1}{\text{pitch}} = \frac{1}{0.199} = 5$ (approx.).

It is evident that where the number of threads would be a fractional value it is approximated to the nearest whole number, except in the case of 3½ and 4½ threads per inch, where fractional values are used.

In Table VII the number of threads per inch corresponding to certain diameters is given. It must be plainly understood that this standard is not supposed to make the regular Whitworth standard thread superfluous, but is simply intended to offer a possibility of a standard fine screw thread for purposes where the regular Whitworth thread would be too coarse. This standard applies only to screws larger than one-quarter inch in diameter. For smaller screws the British Association standard is used.

BRITISH ASSOCIATION STANDARD THREAD.

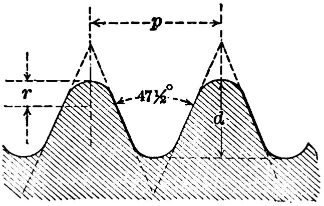

Fig. 6. British Association Standard Thread

The British Association standard thread is the standard system for screws of small diameter in Great Britain. It is hardly used at all in the United States, excepting in the manufacture of tools for the English market. The features of the thread form are similar to those of the Whitworth thread, but the angle between the two sides of the thread is only 47 degrees 30 minutes, and the radius at the top and the bottom of the thread (see Fig. 6) is proportionally larger, the reason being that the depth of the thread is smaller in relation to the pitch than in the Whitworth standard thread. If p, d, and r signify the pitch, the depth, and the radius at the top and bottom of the thread, respectively, then

$$d = 0.6\,p,$$

$$r = \frac{2p}{11}.$$

TABLE VII.

NUMBER OF THREADS PER INCH CORRESPONDING TO A CERTAIN DIAMETER.

British Standard Fine Screw Thread.

Diameter.	No. of Threads.	Diameter at Root of Thread.	Diameter.	No. of Threads.	Diameter at Root of Thread.
1/4	25	0.1988	1 15/16	7	1.7545
5/16	22	0.2543	2	7	1.8170
3/8	20	0.3110	2 1/8	7	1.9420
7/16	18	0.3664	2 1/4	6	2.0366
1/2	16	0.4200	2 3/8	6	2.1616
9/16	16	0.4825	2 1/2	6	2.2866
5/8	14	0.5335	2 5/8	6	2.4116
11/16	14	0.5960	2 3/4	6	2.5366
3/4	12	0.6433	2 7/8	6	2.6616
13/16	12	0.7058	3	5	2.7439
7/8	11	0.7586	3 1/8	5	2.8689
15/16	11	0.8211	3 1/4	5	2.9939
1	10	0.8719	3 3/8	5	3.1189
1 1/16	10	0.9344	3 1/2	4 1/2	3.2154
1 1/8	9	0.9827	3 5/8	4 1/2	3.3404
1 3/16	9	1.0452	3 3/4	4 1/2	3.4654
1 1/4	9	1.1077	3 7/8	4 1/2	3.5904
1 5/16	9	1.1702	4	4 1/2	3.7154
1 3/8	8	1.2149	4 1/4	4	3.9298
1 7/16	8	1.2774	4 1/2	4	4.1798
1 1/2	8	1.3399	4 3/4	4	4.4298
1 9/16	8	1.4024	5	4	4.6798
1 5/8	8	1.4649	5 1/4	3 1/2	4.8841
1 11/16	8	1.5274	5 1/2	3 1/2	5.1341
1 3/4	7	1.5670	5 3/4	3 1/2	5.3841
1 13/16	7	1.6295	6	3 1/2	5.6341
1 7/8	7	1.6920	....	....	....

The various sizes of screws in this system are numbered, and a certain number of threads per inch always corresponds to a given diameter. Table VIII gives all the detailed information in regard to diameter of screws, pitches, and depth and radius of thread, which is necessary for originating tools with this form of thread. The system is founded on metric measurements, hence diameter and pitch are given also in millimeters.

TABLE VIII.

ELEMENTS OF BRITISH ASSOCIATION STANDARD THREAD.

British Association Number.	Diameter.		Pitch.		Depth of Thread.	Radius.	Double Depth of Thread.
	Millimeters.	Inches.	Millimeters.	Inches.	Inches.	Inches.	Inches.
0	6.0	0.2362	1.0	0.0394	0.0236	0.0072	0.0472
1	5.3	0.2087	0.90	0.0354	0.0212	0.0064	0.0425
2	4.7	0.1850	0.81	0.0319	0.0191	0.0058	0.0383
3	4.1	0.1614	0.73	0.0287	0.0172	0.0052	0.0345
4	3.6	0.1417	0.66	0.0260	0.0156	0.0047	0.0312
5	3.2	0.1260	0.59	0.0232	0.0139	0.0042	0.0279
6	2.8	0.1102	0.53	0.0209	0.0125	0.0038	0.0250
7	2.5	0.0984	0.48	0.0189	0.0113	0.0034	0.0227
8	2.2	0.0866	0.43	0.0169	0.0101	0.0031	0.0203
9	1.9	0.0748	0.39	0.0154	0.0092	0.0028	0.0184
10	1.7	0.0669	0.35	0.0138	0.0083	0.0025	0.0165
11	1.5	0.0591	0.31	0.0122	0.0073	0.0022	0.0146
12	1.3	0.0511	0.28	0.0110	0.0066	0.0020	0.0132
13	1.2	0.0472	0.25	0.0098	0.0059	0.0018	0.0118
14	1.0	0.0394	0.23	0.0091	0.0055	0.0016	0.0109
15	0.90	0.0354	0.21	0.0083	0.0050	0.0015	0.0099
16	0.79	0.0311	0.19	0.0075	0.0045	0.0014	0.0090
17	0.70	0.0276	0.17	0.0067	0.0040	0.0012	0.0080
18	0.62	0.0244	0.15	0.0059	0.0035	0.0011	0.0071
19	0.54	0.0213	0.14	0.0055	0.0033	0.0010	0.0066
20	0.48	0.0189	0.12	0.0047	0.0028	0.0009	0.0057
21	0.42	0.0165	0.11	0.0043	0.0026	0.0008	0.0052
22	0.37	0.0146	0.098	0.0039	0.0023	0.0007	0.0046
23	0.33	0.0130	0.089	0.0035	0.0021	0.0006	0.0042
24	0.29	0.0114	0.080	0.0031	0.0019	0.0006	0.0038
25	0.25	0.0098	0.072	0.0028	0.0017	0.0005	0.0034

This system was originated in Switzerland as a standard for screws used in watch and clock making; it is therefore also, at times, referred to as the Swiss small screw-thread system.

BRIGGS STANDARD PIPE THREAD.

The Briggs standard pipe thread is made with an angle of 60 degrees; it is slightly rounded off both at the top and at the bottom, so that the depth of the thread, instead of being equal to the depth of a sharp V-thread (0.866 × pitch), is only four-fifths of the pitch, or equal to $\frac{0.8}{n}$, if n be the number of threads per inch. The difficulty of producing a thread with rounded top and bottom has, however, caused the manufacturers in this country to modify the original standard. Instead of rounding the bottom of the thread it is made sharp as shown in Fig. 7. The top is slightly flattened instead of rounded, the flat being carried down just far enough to tangent the top circle of the correct thread form.

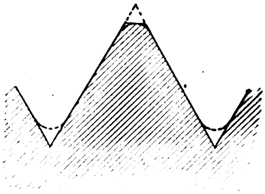
Fig. 7. Brigg's Standard Pipe Thread Form

This thread is used for pipe joints, as indicated by the name, and for many purposes in locomotive boiler work. The taps for producing Briggs standard pipe thread are provided with a taper of three-quarters inch per foot on the diameter. The pipe size is expressed by its nominal size, which, however, is considerably smaller than the actual size. In Table IX the nominal and actual sizes of the tube are given, as well as the corresponding number of threads per inch, the depth and the double depth of the thread. These latter values are figured as being $0.833 \times p$ and $2 \times 0.833 \times p$, respectively, p being the pitch of the thread. This gives the correct depth of a V-thread with a flat on the top as called for by the formula

$$\text{depth} = 0.8 \times \frac{1}{\text{number of threads per inch}},$$

but gives a thread sharp at the bottom of the thread, this being at variance with the original standard as expressed by the formula, but conforming to practical usage. The

$$\text{flat on the top of the thread} = \frac{0.03812}{\text{number of threads per inch}},$$

or approximately one-twenty-fifth of the pitch.

TABLE IX.

ELEMENTS OF BRIGGS STANDARD PIPE THREAD.

Nominal Size of Tube.	Actual Outside Size of Tube.	No. of Threads per Inch.	Depth of Thread.	Width of Flat on Top of Thread.	Double Depth of Thread.
⅛	0.405	27	0.0309	0.0014	0.0617
¼	0.540	18	0.0463	0.0021	0.0926
⅜	0.675	18	0.0463	0.0021	0.0926
½	0.840	14	0.0595	0.0027	0.1190
¾	1.050	14	0.0595	0.0027	0.1190
1	1.315	11½	0.0724	0.0033	0.1449
1¼	1.660	11½	0.0724	0.0033	0.1449
1½	1.900	11½	0.0724	0.0033	0.1449
2	2.375	11½	0.0724	0.0033	0.1449
2½	2.875	8	0.1041	0.0048	0.2082
3	3.500	8	0.1041	0.0048	0.2082
3½	4.000	8	0.1041	0.0048	0.2082
4	4.500	8	0.1041	0.0048	0.2082
4½	5.000	8	0.1041	0.0048	0.2082
5	5.563	8	0.1041	0.0048	0.2082
6	6.625	8	0.1041	0.0048	0.2082
7	7.625	8	0.1041	0.0048	0.2082
8	8.625	8	0.1041	0.0048	0.2082
9 *	9.688	8	0.1041	0.0048	0.2082
10	10.750	8	0.1041	0.0048	0.2082

* By the action of the Manufacturers of Wrought-iron Pipe and Boiler Tubes at a meeting held in New York, May 9, 1889, a change in size of actual outside diameter of 9-inch pipe was adopted, making the latter 9.625 instead of 9.688 inches, as given in the table of Briggs Standard Pipe Diameters.

Whitworth Standard Thread for Gas and Water Piping.

The Whitworth standard thread for gas and water piping is used to some extent in this country. The form of this thread is the Whitworth form, and the only difference from the regular Whitworth standard is the number of threads per inch. The sizes and number of threads per inch, with corresponding depth of thread, are given in Table X.

TABLE X.

ELEMENTS OF WHITWORTH STANDARD THREAD FOR GAS AND WATER PIPING.

Nominal Size of Tube.	Actual Size of Tube.	No. of Threads per Inch.	Depth of Thread.	Radius.	Double Depth of Thread.
⅛	0.385	28	0.0229	0.0049	0.0457
¼	0.520	19	0.0337	0.0072	0.0674
⅜	0.665	19	0.0337	0.0072	0.0674
½	0.822	14	0.0457	0.0098	0.0915
⅝	0.902	14	0.0457	0.0098	0.0915
¾	1.034	14	0.0457	0.0098	0.0915
⅞	1.189	14	0.0457	0.0098	0.0915
1	1.302	11	0.0582	0.0125	0.1164
1⅛	1.492	11	0.0582	0.0125	0.1164
1¼	1.650	11	0.0582	0.0125	0.1164
1⅜	1.745	11	0.0582	0.0125	0.1164
1½	1.882	11	0.0582	0.0125	0.1164
1⅝	2.021	11	0.0582	0.0125	0.1164
1¾	2.160	11	0.0582	0.0125	0.1164
1⅞	2.245	11	0.0582	0.0125	0.1164
2	2.347	11	0.0582	0.0125	0.1164
2⅛	2.467	11	0.0582	0.0125	0.1164
2¼	2.587	11	0.0582	0.0125	0.1164
2⅜	2.794	11	0.0582	0.0125	0.1164
2½	3.001	11	0.0582	0.0125	0.1164
2⅝	3.124	11	0.0582	0.0125	0.1164
2¾	3.247	11	0.0582	0.0125	0.1164
2⅞	3.367	11	0.0582	0.0125	0.1164
3	3.485	11	0.0582	0.0125	0.1164
3¼	3.698	11	0.0582	0.0125	0.1164
3½	3.912	11	0.0582	0.0125	0.1164
3¾	4.125	11	0.0582	0.0125	0.1164
4	4.339	11	0.0582	0.0125	0.1164

SQUARE THREADS.

The square thread is shown in Fig. 8. The sides of the thread are parallel, and as the name indicates, the depth of the thread is equal to the width of space between the teeth, this space being equal to one-half of the pitch. In Table XI the depth of the thread is given for certain numbers of threads per inch.

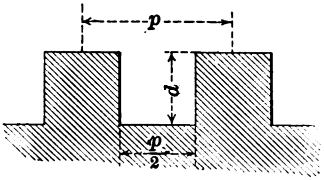

Fig. 8. Square Thread

The square form of thread is usually made about twice as coarse in pitch as the V or United States standard threads, and partly for this reason and partly because of the perpendicular walls of the thread it is a troublesome thread to cut with taps and dies. There is also difficulty where more than one cut is made to produce the finished screw, due to the succeeding taps or dies not having a lead exactly like the one of the partly cut thread, and consequently the thread already formed is cut away. This form of thread is largely used on adjusting and power-conveying screws.

While, theoretically, the space between the teeth is equal to the thickness of the tooth, each being one-half of the pitch, it is evident that the thickness of the tooth must be enough smaller than the space to admit at least an easy sliding fit. In threads with angular sides this slight variation may be taken care of by a small increase of the angle diameter in the nut, but in the case of a square thread with perpendicular sides it is obvious that the only provision possible is a slight increase of the width of the space above the thickness of the tooth.

TABLE XI.

ELEMENTS OF THE SQUARE THREAD.

No. of Threads per Inch.	Depth of Thread.	Double Depth of Thread.	No. of Threads per Inch.	Depth of Thread.	Double Depth of Thread.
1	0.5000	1.0000	8	0.0625	0.1250
1⅓	0.3750	0.7500	9	0.0556	0.1111
1½	0.3333	0.6667	10	0.0500	0.1000
1¾	0.2857	0.5714	11	0.0455	0.0909
2	0.2500	0.5000	12	0.0417	0.0833
2½	0.2000	0.4000	13	0.0385	0.0769
3	0.1667	0.3333	14	0.0357	0.0714
3½	0.1429	0.2857	15	0.0333	0.0667
4	0.1250	0.2500	16	0.0312	0.0625
4½	0.1111	0.2222	18	0.0278	0.0556
5	0.1000	0.2000	20	0.0250	0.0500
5½	0.0909	0.1818	22	0.0227	0.0455
6	0.0833	0.1667	24	0.0208	0.0417
7	0.0714	0.1429	....	....	....

THE ACME THREAD.

The Acme thread, shown in Fig. 9, has of late become widely used, having in most instances taken the place of the square thread on account of its better wearing qualities and the comparative ease with which this thread can be produced. Of all the thread systems which we have treated, this is the only one where a standard provision has been made for clearance at the top and in the bottom of the thread. The screw provided with an Acme thread is made of standard diameter, but the nut into which it is to fit is made over size in its total diameter. The relationship between screw and nut is plainly illustrated in Fig. 10. If the diameter of the screw is A over the top of

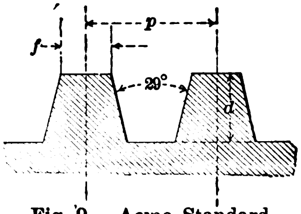

Fig. 9. Acme Standard Thread Form

the thread, and B at the bottom or root of the thread, the corresponding diameters in the nut are $A + 0.020$ and $B + 0.020$ inch. Referring again to Fig. 9, it will be noticed that the sides of the thread form an angle of 29 degrees with one another. Considering the screw only, if p is the pitch, d the depth of the thread, f the width of the flat at the top of the thread, and c the width of the flat at the root of the thread, then

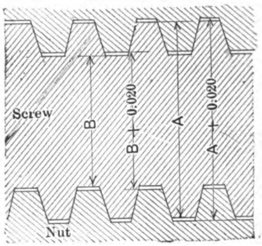

Fig. 10. Dimensions of Thread in Screw and Nut, Acme Standard

$$d = \frac{p}{2} + 0.010 \text{ inch},$$

$$f = 0.3707\, p,$$

$$c = 0.3707\, p - 0.0052 \text{ inch}.$$

Table XII contains the values of d, f, and c for certain common numbers of threads per inch. Having given the formula for the depth of the thread it is clear that

Diameter at root of thread = total diameter $- (p + 0.020)$.

This formula regards screws as well as taps for Acme thread nuts. The formulas for d and f given above refer to screws only. On taps the flats at the top and the bottom are alike and equal c, or $0.3707\, p - 0.0052$ inch. The diameter of the tap equals diameter of screw + 0.020, which is evident from what has previously been said about the size of the thread in Acme thread nuts.

The Acme thread has many good points, not the least of which is its strength and the ease with which it may be cut, compared with the square thread. This is due to the greater strength of the teeth in both taps and dies, as well as to the facility with which the cuttings free themselves.

This thread is recommended as a substitute for, and in preference to, the square form of thread.

TABLE XII.

ELEMENTS OF THE ACME STANDARD THREAD.

No. of Threads per Inch.	Depth of Thread.	Width of Flat at Top of Thread.	Width of Flat at Root of Thread.	Double Depth of Thread.
1	0.5100	0.3707	0.3655	1.0200
1½	0.3433	0.2471	0.2419	0.6867
2	0.2600	0.1853	0.1801	0.5200
2½	0.2100	0.1483	0.1431	0.4200
3	0.1767	0.1236	0.1184	0.3533
3½	0.1529	0.1059	0.1007	0.3057
4	0.1350	0.0927	0.0875	0.2700
4½	0.1211	0.0824	0.0772	0.2422
5	0.1100	0.0741	0.0689	0.2200
5½	0.1009	0.0674	0.0622	0.2018
6	0.0933	0.0618	0.0566	0.1867
7	0.0814	0.0530	0.0478	0.1629
8	0.0725	0.0463	0.0411	0.1450
9	0.0656	0.0412	0.0360	0.1311
10	0.0600	0.0371	0.0319	0.1200
12	0.0517	0.0309	0.0257	0.1033

French and International Standard Threads.

The French and International standard threads are of the same form as the United States standard, and the formulas given for the latter form of thread apply to the former. The pitches, however, are stated in the metric measure, and are somewhat finer for corresponding diameters than the United States standard thread. This is a distinct advantage, especially on the smaller sizes. The standard thread of the International system, denoted S. I., was adopted by the International Congress for the unifying of screw threads, held at Zürich, 1898. This system conforms in general with the system earlier adopted in France, the French standard thread, denoted S. F., but some slight variations occur, as can be easily seen from

Table XIV, where the diameters and corresponding pitches are given.

In order to provide for clearance at the bottom of the thread, the Congress referred to above specified that "the clearance at the bottom of the thread shall not exceed one-sixteenth part of the height of the original triangle. The shape of the bottom of the thread resulting from said clearance is left to the manufacturers. However, the Congress recommends rounded profile for said bottom." By this provision, choice is given manufacturers in the several countries interested of making the bottoms of their threads flat or rounded, as desired, and yet have them conform to a common standard so as to interchange if necessary.

TABLE XIII.

ELEMENTS OF THE FRENCH AND INTERNATIONAL SYSTEM STANDARD THREAD.

Pitch, Mm.	Depth of Thread, Inches.	Width of Flat, Inches.	Double Depth of Thread, Inches.	Pitch, Mm.	Depth of Thread, Inches.	Width of Flat, Inches.	Double Depth of Thread, Inches.
8	0.2046	0.0394	0.4092	3.25	0.0831	0.0160	0.1662
7.75	0.1982	0.0382	0.3964	3	0.0767	0.0148	0.1534
7.5	0.1918	0.0369	0.3836	2.75	0.0703	0.0135	0.1406
7.25	0.1854	0.0357	0.3708	2.5	0.0639	0.0123	0.1279
7	0.1790	0.0344	0.3580	2.25	0.0575	0.0111	0.1151
6.75	0.1726	0.0332	0.3452	2	0.0511	0.0098	0.1023
6.5	0.1662	0.0320	0.3324	1.75	0.0448	0.0086	0.0895
6.25	0.1598	0.0308	0.3196	1.5	0.0384	0.0074	0.0767
6	0.1534	0.0295	0.3068	1.25	0.0320	0.0062	0.0639
5.75	0.1470	0.0283	0.2940	1	0.0256	0.0049	0.0511
5.5	0.1406	0.0271	0.2812	0.9	0.0230	0.0044	0.0460
5.25	0.1343	0.0259	0.2685	0.8	0.0205	0.0039	0.0409
5	0.1279	0.0246	0.2557	0.75	0.0192	0.0037	0.0384
4.75	0.1215	0.0234	0.2429	0.7	0.0179	0.0034	0.0358
4.5	0.1151	0.0221	0.2301	0.6	0.0153	0.0030	0.0307
4.25	0.1087	0.0209	0.2174	0.5	0.0128	0.0025	0.0256
4	0.1023	0.0197	0.2046	0.4	0.0102	0.0020	0.0205
3.75	0.0959	0.0185	0.1918	0.3	0.0077	0.0015	0.0153
3.5	0.0895	0.0172	0.1790	0.25	0.0064	0.0012	0.0128

In Table XIII the necessary data as to depth of thread and flat at top and bottom of thread are given. We may remark that in this country the rounded profile at the bottom is not in vogue, the form of the thread being made an exact duplicate of the United States standard form.

TABLE XIV.

DIAMETERS AND CORRESPONDING PITCHES.

French and International Systems Standard Thread.

French System.			International System.		
Diameter, Mm.	Pitch, Mm.	Diameter at Root of Thread, Mm.	Diameter, Mm.	Pitch, Mm.	Diameter at Root of Thread, Mm.
3	0.5	2.35	6	1.0	4.70
4	0.75	3.03	7	1.0	5.70
5	0.75	4.03	8	1.25	6.38
6	1.0	4.70	9	1.25	7.38
7	1.0	5.70	10	1.5	8.05
8	1.0	6.70	11	1.5	9.05
9	1.0	7.70	12	1.75	9.73
10	1.5	8.05	14	2.0	11.40
12	1.5	10.05	16	2.0	13.40
14	2.0	11.40	18	2.5	14.75
16	2.0	13.40	20	2.5	16.75
18	2.5	14.75	22	2.5	18.75
20	2.5	16.75	24	3.0	20.10
22	2.5	18.75	27	3.0	23.10
24	3.0	20.10	30	3.5	25.45
26	3.0	22.10	33	3.5	28.45
28	3.0	24.10	36	4.0	30.80
30	3.5	25.45	39	4.0	33.80
32	3.5	27.45	42	4.5	36.15
34	3.5	29.45	45	4.5	39.15
36	4.0	30.80	48	5.0	41.51
38	4.0	32.80	52	5.0	45.51
40	4.0	34.80	56	5.5	48.86
42	4.5	36.15	60	5.5	52.86
44	4.5	38.15	64	6.0	56.21
46	4.5	40.15	68	6.0	60.21
48	5.0	41.51	72	6.5	63.56
50	5.0	43.51	76	6.5	67.56
			80	7.0	70.91

In order to facilitate any necessary conversion of millimeters into inches a metric conversion table is appended. (See Table XV.)

TABLE XV.

MILLIMETERS CONVERTED INTO INCHES.

Mm.	Inches.	Mm.	Inches.	Mm.	Inches.	Mm.	Inches.	Mm.	Inches.
0.01	0.0004	0.35	0.0138	0.69	0.0272	4	0.1575	38	1.4961
0.02	0.0008	0.36	0.0142	0.70	0.0276	5	0.1969	39	1.5354
0.03	0.0012	0.37	0.0146	0.71	0.0280	6	0.2362	40	1.5748
0.04	0.0016	0.38	0.0150	0.72	0.0283	7	0.2756	41	1.6142
0.05	0.0020	0.39	0.0154	0.73	0.0287	8	0.3150	42	1.6535
0.06	0.0024	0.40	0.0157	0.74	0.0291	9	0.3543	43	1.6929
0.07	0.0028	0.41	0.0161	0.75	0.0295	10	0.3937	44	1.7323
0.08	0.0031	0.42	0.0165	0.76	0.0299	11	0.4331	45	1.7716
0.09	0.0035	0.43	0.0169	0.77	0.0303	12	0.4724	46	1.8110
0.10	0.0039	0.44	0.0173	0.78	0.0307	13	0.5118	47	1.8504
0.11	0.0043	0.45	0.0177	0.79	0.0311	14	0.5512	48	1.8898
0.12	0.0047	0.46	0.0181	0.80	0.0315	15	0.5905	49	1.9291
0.13	0.0051	0.47	0.0185	0.81	0.0319	16	0.6299	50	1.9685
0.14	0.0055	0.48	0.0189	0.82	0.0323	17	0.6693	51	2.0079
0.15	0.0059	0.49	0.0193	0.83	0.0327	18	0.7087	52	2.0472
0.16	0.0063	0.50	0.0197	0.84	0.0331	19	0.7480	53	2.0866
0.17	0.0067	0.51	0.0201	0.85	0.0335	20	0.7874	54	2.1260
0.18	0.0071	0.52	0.0205	0.86	0.0339	21	0.8268	55	2.1653
0.19	0.0075	0.53	0.0209	0.87	0.0343	22	0.8661	56	2.2047
0.20	0.0079	0.54	0.0213	0.88	0.0346	23	0.9055	57	2.2441
0.21	0.0083	0.55	0.0217	0.89	0.0350	24	0.9449	58	2.2835
0.22	0.0087	0.56	0.0220	0.90	0.0354	25	0.9842	59	2.3228
0.23	0.0091	0.57	0.0224	0.91	0.0358	26	1.0236	60	2.3622
0.24	0.0094	0.58	0.0228	0.92	0.0362	27	1.0630	61	2.4016
0.25	0.0098	0.59	0.0232	0.93	0.0366	28	1.1024	62	2.4409
0.26	0.0102	0.60	0.0236	0.94	0.0370	29	1.1417	63	2.4803
0.27	0.0106	0.61	0.0240	0.95	0.0374	30	1.1811	64	2.5197
0.28	0.0110	0.62	0.0244	0.96	0.0378	31	1.2205	65	2.5590
0.29	0.0114	0.63	0.0248	0.97	0.0382	32	1.2598	66	2.5984
0.30	0.0118	0.64	0.0252	0.98	0.0386	33	1.2992	67	2.6378
0.31	0.0122	0.65	0.0256	0.99	0.0390	34	1.3386	68	2.6772
0.32	0.0126	0.66	0.0260	1	0.0394	35	1.3779	69	2.7165
0.33	0.0130	0.67	0.0264	2	0.0787	36	1.4173	70	2.7559
0.34	0.0134	0.68	0.0268	3	0.1181	37	1.4567	......	......

MISCELLANEOUS SYSTEMS OF THREAD IN COMMON USE.

Besides the systems previously treated, which we have classified as standard systems of thread, there are a number of systems which have never become recognized standards, but which nevertheless are used to a greater or smaller extent in special trades.

Instrument and Watch Makers' Systems.—The standard screw thread of the Royal Microscopical Society of London, England, is employed for microscope objectives, and the nose pieces of the microscope into which these objectives screw. The form of the thread is the Whitworth form; the diameter of the male gauge is 0.7626 inch. The number of threads per inch is 36.

TABLE XVI.

WHITWORTH STANDARD THREAD SYSTEM FOR WATCH AND MATHEMATICAL INSTRUMENT MAKERS.

Diameter of Screw, Inches.	No. of Thrds. per Inch.	Diameter of Screw, Inches.	No. of Thrds. per Inch.	Diameter of Screw, Inches.	No. of Thrds. per Inch.
0.010	400	0.022	210	0.050	100
0.011	400	0.024	210	0.055	100
0.012	350	0.026	180	0.060	100
0.013	350	0.028	180	0.065	80
0.014	300	0.030	180	0.070	80
0.015	300	0.032	150	0.075	80
0.016	300	0.034	150	0.080	60
0.017	250	0.036	150	0.085	60
0.018	250	0.038	120	0.090	60
0.019	250	0.040	120	0.095	60
0.020	210	0.045	120	0.100	50

In Table XVI are given the sizes and corresponding number of threads for Whitworth standard screw pitch system for watch and mathematical instrument makers. This system is adopted by many instrument makers both in the United States and Europe.

Lag Screw Threads.—There is no recognized standard for the sizes and corresponding number of threads for lag screws. Table XVII gives the number of threads according to common practice. While lag screws are largely made according to this system, there is, however, a number of varying systems in use.

TABLE XVII.

LAG SCREW THREADS.

Diameter of Screw.	Number of Threads per Inch.	Diameter of Screw.	Number of Threads per Inch.
$\frac{1}{4}$	10	$\frac{5}{8}$	5
$\frac{5}{16}$	9	$\frac{11}{16}$	5
$\frac{3}{8}$	8	$\frac{3}{4}$	5
$\frac{7}{16}$	7	$\frac{7}{8}$	4
$\frac{1}{2}$	6	1	4
$\frac{9}{16}$	6	....	....

Gas-Fixture Threads. — Thin brass tubing is threaded with 27 threads per inch, irrespective of diameter. The so-called "Ornament brass sizes" have 32 threads per inch. The standard sizes of the thread are 0.196 inch (large ornament brass size) and 0.148 inch (small ornament brass size).

Fine Screw-Thread Systems. — We have previously referred to the desirability of the adoption of a standard system with the United States standard form of thread but with a finer pitch than called for by this standard. We also mentioned the system which has been proposed by the Association of Licensed Automobile Manufacturers. In this system the diameters and corresponding number of threads are as follows:

$\frac{1}{4}$	28	$\frac{5}{8}$	18
$\frac{5}{16}$	24	$\frac{11}{16}$	16
$\frac{3}{8}$	24	$\frac{3}{4}$	16
$\frac{7}{16}$	20	$\frac{7}{8}$	14
$\frac{1}{2}$	20	1	14
$\frac{9}{16}$	18		

The objection to the adoption of this standard by a single body of manufacturers is obvious. Even if the standard is one which would recommend itself for general use, it would have been better if the opinions and the needs of machine builders in general had been taken into consideration. Besides, there is reasonable doubt whether the standard referred to is not *too* fine for ordinary construction even where the need of a fine-pitch standard has presented itself. Automobile construction is, of course, so specialized a manufacture that here doubtless may arise requirements which do not present themselves elsewhere.

It seems as if the pitches of the British standard fine screw thread were well selected for a fine-pitch screw thread, at least with a few slight modifications. It would be well if a system of such a kind could be adopted. The number of threads corresponding to a certain diameter given in Table XVIII will be found very suitable for a fine pitch screw standard, and may serve as a guide in selecting fine pitches until a recognized standard is proposed and adopted.

TABLE XVIII.

PROPOSED FINE SCREW-THREAD SYSTEM.

Diameter of Screw.	Number of Threads.	Diameter of Screw.	Number of Threads.	Diameter of Screw.	Number of Threads.	Diameter of Screw.	Number of Threads.
$\frac{1}{4}$	26	$\frac{3}{4}$	14	$1\frac{1}{2}$	10	$2\frac{1}{2}$	7
$\frac{5}{16}$	24	$\frac{13}{16}$	13	$1\frac{5}{8}$	9	$2\frac{3}{4}$	7
$\frac{3}{8}$	22	$\frac{7}{8}$	13	$1\frac{3}{4}$	9	3	7
$\frac{7}{16}$	20	$\frac{15}{16}$	12	$1\frac{7}{8}$	9	$3\frac{1}{4}$	6
$\frac{1}{2}$	18	1	12	2	8	$3\frac{1}{2}$	6
$\frac{9}{16}$	16	$1\frac{1}{8}$	11	$2\frac{1}{8}$	8	4	6
$\frac{5}{8}$	16	$1\frac{1}{4}$	11	$2\frac{1}{4}$	8	......	....
$\frac{11}{16}$	14	$1\frac{3}{8}$	10	$2\frac{3}{8}$	7	......	....

STANDARD PROPORTIONS FOR MACHINE SCREWS.

Finally, we will give our attention to a new standard system for machine screws which promises to gain universal recognition. A committee appointed by the American Society of Mechanical Engineers to investigate the subject of machine screw proportions and to recommend standard specifications for machine screws, made its first report at the December meeting, 1905. Some criticism, however, of this report made it necessary to call for a second, and what was intended to be a final, report at the May meeting, 1906. In the discussion that followed this report there were, however, several diverging opinions expressed on this subject, and the committee was therefore continued and was supposed to report at the December meeting in the same year. For some reason the report, however, was not accepted by the Association until the Indianapolis meeting in May, 1907. Below are presented some of the most important points of consideration in the new standard for machine screws which has been accepted by the American Society of Mechanical Engineers.

The standard diameters of machine screws are to be 21 in number. The included angle of the thread is 60 degrees, and the flat at the top and bottom of the thread for the basic standard is one-eighth of the pitch. The uniform increment between all sizes from 0.060 inch to 0.190 inch is 0.013 inch, and for larger sizes 0.026 inch, making the largest size 0.450 inch in diameter. The number of threads is made a function of the diameter as expressed by the formula

$$\text{Number of threads per inch} = \frac{6.5}{D + 0.02}.$$

This formula, however, gives the results approximately only, as even numbers of threads are chosen in order to avoid fractional or odd numbers.

TABLE XIX.

FORMULAS FOR PROPOSED STANDARD FOR MACHINE SCREWS AND TAPS. BASIC STANDARD THREAD,. U. S. FORM.

T.P.I. = Number of Threads per inch.

Screws.

Max. external diam. = basic external diam.

Max. pitch diam. = basic pitch diam.

Max. root diam. = basic root diam.

Min. external diam. = basic external diam. $- \dfrac{0.336}{\text{T.P.I.} + 40}$.

Min. pitch diam. = basic pitch diam. $- \dfrac{0.168}{\text{T.P.I.} + 40}$.

Min. root diam. = basic root diam. $- \left[\dfrac{0.10825}{\text{T.P.I.}} + \dfrac{0.168}{\text{T.P.I.} + 40}\right]$.

Taps.

Max. external diam. = basic external diam. $+ \dfrac{0.10825}{\text{T.P.I.}} + \dfrac{0.224}{\text{T.P.I.} + 40}$.

Max. pitch diam. = basic pitch diam. $+ \dfrac{0.224}{\text{T.P.I.} + 40}$.

Max. root diam. = basic root diam. $+ \dfrac{0.336}{\text{T.P.I.} + 40}$.

Min. external diam. = basic external diam. $+ \dfrac{0.112}{\text{T.P.I.} + 40}$.

Min. pitch diam. = basic pitch diam. $+ \dfrac{0.112}{\text{T.P.I.} + 40}$.

Min. root diam. = basic root diam. $+ \dfrac{0.112}{\text{T.P.I.} + 40}$.

In regard to the limits for variation from the basic standard, the maximum screw shall conform practically in all respects to the basic standard. The minimum screw shall have a flat at the bottom of the thread of one-sixteenth of the pitch, and the difference between the maximum and the minimum root diameter will allow at the bottom of the thread any width of flat between one-sixteenth and one-eighth of the pitch. (See Figs. 11 and 12.) The maximum tap shall have a flat at the top of the thread equal to one-sixteenth of the pitch, and the difference between the maximum and the minimum

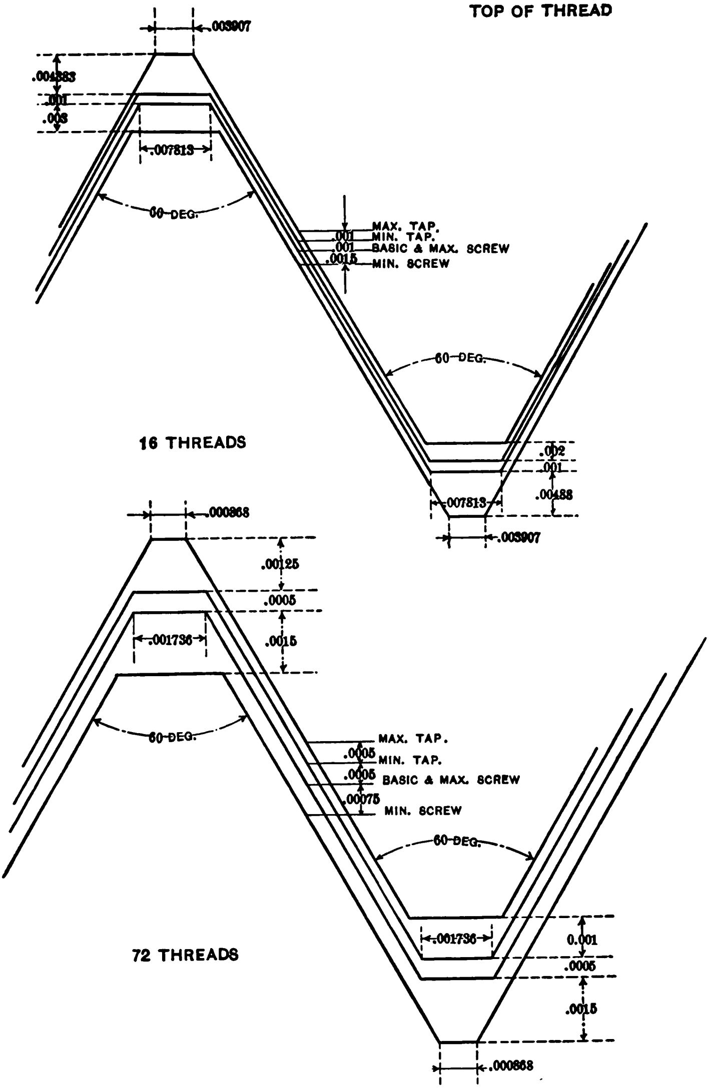

Figs. 11 and 12. Machine Screw Thread Standard Adopted by the American Society of Mechanical Engineers; 16 and 72 Threads per Inch external diameter will allow at the top of the thread any width of flat between one-sixteenth and one-eighth of the pitch. The minimum tap shall conform to the basic standard in all respects except in diameter, as plainly shown in the cuts. The difference between the minimum tap and the maximum screw is settled upon in order to allow for errors in pitch and for the wear of the tap in service. The formulas in Table XIX give the relations between the various dimensions determining the sizes of taps and screws in this standard.

TABLE XX.

DOUBLE END TEMPLET THREAD GAUGES FOR INSPECTION OF SCREWS.

$$\text{Thickness} = \sqrt{\text{Pitch}} \times 1.443.$$

Threads per Inch.	Thickness.	Threads per Inch.	Thickness.
80	0.161	30	0.263
72	0.170	28	0.273
64	0.180	24	0.295
56	0.193	22	0.308
48	0.208	20	0.323
44	0.217	18	0.345
40	0.228	16	0.361
36	0.240	14	0.385
32	0.255	....	....

The reference thread gauges should be made from unhardened steel, 0.35 per cent carbon, and a set should include both reference thread gauges for screws and reference thread gauges for taps, each of these to represent the maximum and minimum diameters. Table XX gives the thickness of double end templet thread gauges, for each pitch of the standard screws recommended, for the practical inspection of machine screws. The formula

$$\text{Thickness} = \sqrt{\text{pitch}} \times 1.443$$

provides a limit for the error in lead on screws and taps. These templet thread gauges are to be made of steel, hardened, and being double ended and having maximum and minimum limits, respectively, are to represent at the largest end the pitch and root diameters of the basic standard, while at the small end they should represent the minimum limits for the pitch and root diameters of screws. The threads of these templet gauges should be made by taps having the thread enough larger than the standard in the outside diameter to insure clearance at the top of the thread of the screw. In addition to the threaded holes, these gauges should have plain cylindrical holes representing, respectively, the external diameter of the maximum and minimum screw.

In Chapter IV, tables are given stating all dimensions for taps and screws made according to this system of standard machine screw threads.

CHAPTER II.

METHODS AND PRINCIPLES OF THREAD-CUTTING. —MEASURING THREADS.

THREAD-CUTTING.

Comparison between Usual Methods.— There are two common ways of producing screw threads, cutting the threads in a lathe or cutting them by means of dies. The first method, and the one with which we will deal here, is the one used whenever any greater degree of accuracy of pitch and diameter is desired. By special methods, and by extreme care in making the dies as well as cutting the thread, screws within close limits of accuracy may be produced by means of dies; but for cutting the threads of taps, where any original error or imperfection would be duplicated in all the pieces of work afterward threaded by the tap, the only desirable method is the cutting of the thread in a lathe. All screws of any considerable length must also be cut in this manner, as accuracy in lead cannot be insured unless the accuracy of a tested lead screw is duplicated in the piece threaded.

Examples have been pointed out where, in using dies for thread cutting, the inaccuracy of ordinary commercial dies in the pitch has been so great as to cut a thread which, if continued for a foot in length, would have had an error of one-eighth inch in the lead. If the thread is cut with dies by hand there is also a chance for error in the starting of the die. The thread may not be true with the axis of the work, for although most dies intended for use by hand are either themselves provided with a guide or mounted so that the piece to be threaded enters a guide before reaching the die, this guide does not always fit the piece closely enough to start the die perfectly true. In all these respects lathe threading is superior, and cannot be too strongly recommended in all cases where a thread of good qualities is required.

Cutting Screws without the Aid of a Lead Screw.— Because the lead of a screw being cut always depends upon the lead of a thread that has been previously cut, any incorrectness in the master thread (as in a lathe, in the thread of the lead screw) will be reproduced in the screw. For ordinary purposes, the errors in the lead of lead screws of lathes of good manufacture are insignificant, but occasions arise when these errors must be taken into consideration. In order to avoid the duplication of errors of this character, Messrs. de Fries & Co., Düsseldorf, Germany, have designed a new screw-cutting lathe, working on the principle of producing a thread independently of a previously cut lead screw. The lathe employed for this purpose is of common design, the feature of extraordinary interest being the arrangement for feeding the carriage; a flexible steel band is used for this purpose instead of the lead screw. This band is located centrally between the two ways of the bed, and one end of the band is fastened to the front end of the carriage, while the other end extends under the head-stock and is fastened to a drum, turned accurately to a definite diameter. When this drum is revolving, the steel band is wound up on it, and thus feeds the carriage. The drum, of course, must be large enough so that the steel band when winding up does not reach fully one complete turn around the drum, because if it reached more than one turn around, the band in winding up on itself would be wound up on a larger diameter than that of the drum, thus causing incorrect results. The drum is driven from the cone pulley by means of a worm and worm wheel.

For the return, another steel band is fastened to the rear end of the carriage, this band extending to the rear end of the lathe and running over an idle pulley. A counterweight is suspended from this band heavy enough to pull the carriage back when released from the pull at its front end. This lathe is not used for cutting the whole screw from start to finish, but simply for finishing the thread. The arrangement is by its construction too weak to stand up for the heavy cuts necessary for rough threading. The thread is therefore cut in an ordinary screw-cutting lathe, somewhat over size, and then placed in this special lathe mentioned and there finished. It is claimed that by this machine it is possible to cut the most correct thread as yet produced for commercial purposes.

Cutting Threads in the Thread Milling Machine. — A method of producing threads which has been but lately brought into more general use is the milling of the thread in special thread milling machines, which, while embodying the principles of a lathe, are provided with a cutter head in place of the lathe tool-post, and a cutter, driven from the countershaft in place of the ordinary tool. As this method contains all the principles which insure accuracy in thread-cutting in a lathe, equally perfect threads will result from milling. The cutting of threads in a thread milling machine is also more economical, at least when fairly long threads are to be cut. The thread is milled to its full depth at once, and as the center of the cutter is always at the same height as the center of the work, there is no risk of improper setting of the tool. The only objection that could be advanced is that the cutter head is tilted to the angle of helix of the thread, and consequently, if the same cutter is used for all diameters with the same number of threads per inch, the thread form will be slightly inaccurate, owing to the different angles to which the cutter head is tilted. For all ordinary angles of helix, that is, for all diameters provided with a proportionate pitch, this inaccuracy, however, is so small as to command no consideration.

Method of Rolling Threads.—Some manufacturers of taps finish the thread by a process named *rolling*. The tap is first rough threaded, and afterward passed through a set of three rollers, mounted in a kind of a chuck.

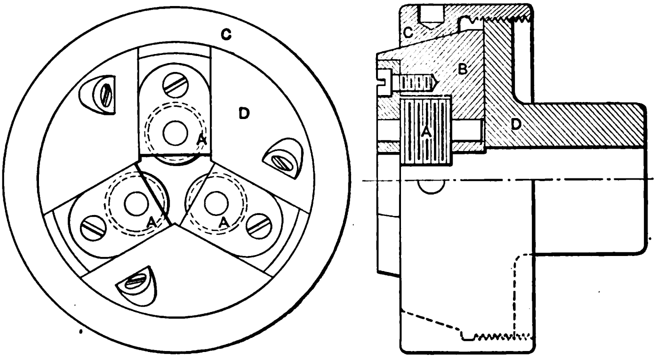

Fig. 13. Device for Rolling Threads on Small Screws

These rollers are provided with circular grooves of the same shape as the thread, and in order to insure the correct lead, each roller must be cut with its grooves one-third of the pitch in advance of the next preceding roller. All the rollers are mounted in the same horizontal plane if the tap passes through them vertically, or in the same vertical plane if the tap passes through them in a horizontal direction. What has been said in regard to rolling threads may be better understood by referring to Fig. 13, where the outline of a chuck with three rollers is shown. The pieces *A* provided with circular grooves are the rollers. These are mounted in adjustable blocks *B*, the back ends of which are tapered to correspond to the taper of the ring *C*, which encloses the whole arrangement and serves the purpose of providing for the adjustment. By screwing the ring *C* down, the rollers are evidently pushed toward the center of the chuck, and screwing the ring up permits the rollers and the blocks to recede. The blocks, when adjusted, are held in position in relation to the center line of the body *D* by means of binding screws entering from the front face at an angle of 45 degrees and binding in grooves in the blocks.

This arrangement is used for rolling smaller taps. For larger ones the ring *C* is eliminated, and the rollers are mounted in blocks, adjustable by screws in a similar manner to the jaws in universal chucks. This manner of finishing tap threads is very economical, and the tap thread fills all reasonable requirements. It is particularly of advantage for finishing taps with thread forms having radii at top and bottom, as it saves the necessity of complicated thread tools, the roughing operation taking no account of the round at top and bottom, this being impressed in the tap by the rollers when finishing.

One special way of producing threads by rolling, which, however, can hardly be considered as directly concerning the tool-maker, is the process of rolling threads on rough wire or forged blanks without previous rough threading. The blank is then rolled between two dies or blocks having grooves of the right pitch, form, and angle of lead, and the thread is formed by displacement of the metal, which causes the finished screw to be larger in diameter than the blank. One die is usually stationary, while the other has a reciprocating motion.

A device of this description, intended to be used for thread-rolling on a punch press, was shown by Mr. S.

Oliver in the July, 1907, issue of *Machinery*. In Fig. 14, *A* is a punch holder to fit the punch press. *B* is the bolster, or a piece of cast iron about 1 inch thick, upon which are located two cast-iron blocks, one made stationary and the other adjustable by slotting *B*, so that the block can be forced ahead by the set screw *C*. There is a groove in the stationary block and a tongue in the punch holder *A* to prevent the dies from getting out of line. The screw *D* is for holding a thin piece of steel as a stop so that the thread can be cut to the desired length. The screw *E* holds a wire supporting the piece to be threaded until the upper die, *F*, comes down and carries it past the lower die, *G*. In cutting the die, it may be made in one piece, *H* being the circumference of the thread to be rolled and G_1 the desired length for the lower die. F_1 is the desired length for the upper die, which must be longer than the lower die so that it will roll the wire past the die

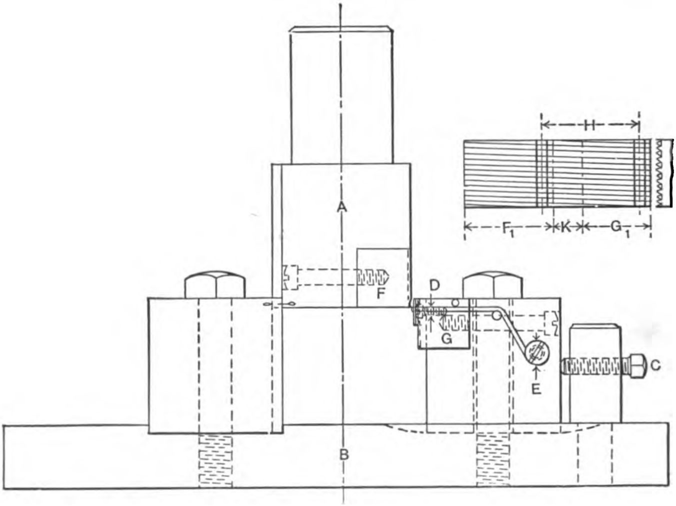

Fig. 14. Device for Thread-Rolling in a Punch Press

G and permit it to drop out of the way. The part *K* must be cut out when cutting in two parts. The proper angle to which to cut the die depends on the pitch of the thread. The pitch divided by the circumference of the screw to be rolled will give the tangent of the angle. In cutting the die, which must be of good tool steel and hardened after making, the shaper is used. The cut is taken with a tool that can be taken off and put back again without changing its location, such a tool, for instance, as a circular threading tool. In case the point should happen to get dull, the tool can then be removed for grinding. If the feed screw should not have the desired graduations on it, a brass index plate can be made very quickly and used on the machine. The brass plate should be of a good size and cut accurately in a milling machine, and a pointer clamped on the shaper.

Cutting Threads by Rapidly Revolving Hardened Disk. — An interesting method for producing threads was shown in the January, 1908, issue of *Machinery*, by Mr. Oskar Kylin. In Fig. 15 this method is illustrated. It is used for threading studs, pins, etc., of manganese steel, this material being so hard that it cannot be cut by any kind of tool steel. A plain, hardened tool-steel disk, having the edge made according to the angle of thread, is employed. This disk is revolved at a high speed, and at the same time forced into the work, which is revolved slowly. Due to the friction between the edge of the disk and the work, and the softening of the material, owing to the heat generated by the friction, the disk wears away the stock and by means of this creates the thread. The stock is coming off in very small, thin scales like chips, which to some extent remind one of the scales of a fish. An ordinary lathe has been rigged up for the purpose by removing the tool-post and top rest and substituting for them the fixture shown in the cut. The disk must be driven independently by an overhead drum or some similar arrangement. The peripheral speed of the disk is usually between 3000 and 4000 feet per minute. The operation is unavoidably slow and expensive, and the method is used only when no other way is possible.

Cutting Threads in the Lathe. — Having mentioned the most common methods for producing threads we will now review the fundamental principles of cutting threads in the lathe. While well known to all mechanics, it is necessary to dwell upon this question to some extent in order to complete the subject in hand.

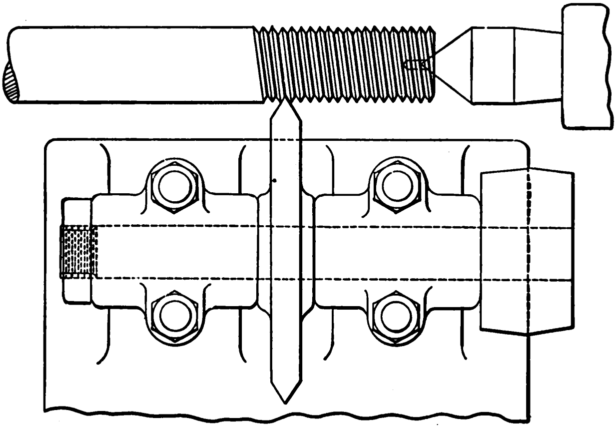

Fig. 15. Cutting Threads by a Rapidly Revolving Disk

DETERMINING THE CHANGE GEARS FOR THREAD-CUTTING.

The determining of the change gears for gearing the lathe to cut the desired thread seems to be a never decreasing source of difficulty. Of course, all lathes are now provided with a gear-cutting index for gearing the lathe to cut standard threads. When it is required, however, to determine the change gears for an odd or a fractional pitch, many a man otherwise efficient is at a loss.

While the principles and rules governing the calculation of change gears are very simple, they of course presuppose some fundamental knowledge of the use of common fractions. If such knowledge is at hand, the subject of figuring change gears, if once thoroughly understood, can hardly ever be forgotten. It should be impressed upon the minds of all who have found difficulties with this subject that the matter is not approached in a logical manner, and is usually grasped by the memory rather than by the intellect. Before answering the question in regard to any rules for figuring change gears, let us therefore analyze the subject. The lead screw *B* of the lathe (see Fig. 16) must be recognized as our first factor, and the spindle as the second. If the lead screw has six threads per inch, then, if the lead screw makes six revolutions, the carriage travels one inch, and the thread-cutting tool travels one inch along the piece to be threaded. If the spindle makes the same number of revolutions in a given time as the lead screw, it is clear the tool will cut six threads per inch. In such a case the gear *D* on the spindle stud *J*, and gear *E* on the lead screw, are alike. If the spindle makes twice the number of revolutions of the lead screw, the spindle revolves twelve times while the tool moves one inch, and consequently twelve threads per inch will be cut. But in order to make the spindle revolve twice as fast as the

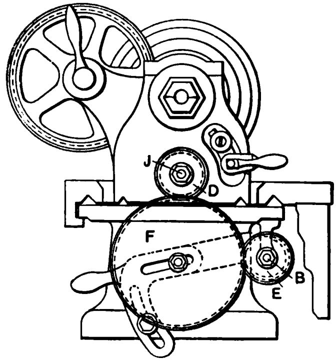

Fig. 16. Simple Gearing

lead screw, it is necessary that a gear be put on the spindle stud of only half the number of teeth of the gear on the lead screw, so that when the lead screw revolves once the spindle-stud gear makes two revolutions.

SIMPLE GEARING.

Suppose we wish to cut nine threads per inch with a lead screw of six threads per inch, as referred to above. Then the six threads of the lead screw correspond to nine threads on the piece to be threaded, which is the same as saying that six revolutions of the lead screw correspond to nine revolutions of the spindle; or in other words, one revolution of the lead screw corresponds to 1½ of the spindle. From this it is evident that the gear on the lead screw must make only one revolution while the spindle-stud gear makes 1½. Thus, if the lead-screw gear has, for instance, 36 teeth, the gear on the spindle stud should have only 24, the smaller gear, of course, revolving faster than the larger. If we express what has been previously said in a formula we have

$$\frac{\text{threads per inch of lead screw}}{\text{threads per inch to be cut}} = \frac{\text{teeth in gear on spindle stud}}{\text{teeth in gear of lead screw}}.$$

Applying this to the case above, we have

$$\frac{6}{9} = \frac{24}{36}.$$

The values 24 and 36 are obtained by multiplying 6 and 9, respectively, by 4. By multiplying both the numerator and the denominator by the same number we do not change the proportion. As a general rule we may then say that the change gears necessary to cut a certain number of threads per inch are found by placing the number of threads in the lead screw in the numerator, the number of threads to be cut in the denominator, and then multiplying numerator as well as denominator by the *same* number, by trial, until two gears are obtained the numbers of teeth of which are both to be found in the set of gears accompanying the lathe. The gear with the number of teeth designated by the new numerator is to be placed on the spindle stud (at *J*, Fig. 16), and the gear with the number of teeth corresponding to the denominator on the lead screw *B*.

A few examples of this will more clearly explain the rule. Suppose the number of teeth of the change gears of a lathe are 24, 28, 32, 36, and so forth, increasing by 4 teeth up to 100. Assume that the lead screw is provided with 6 threads per inch, and that 10 threads per inch are to be cut. Then

$$\frac{6}{10} = \frac{6 \times 4}{10 \times 4} = \frac{24}{40}.$$

By multiplying both numerator and denominator by 4 we obtain two available gears with 24 and 40 teeth, respectively. The 24-tooth gear goes on the spindle stud, and the 40-tooth gear on the lead screw. Assuming the same lathe and gears, let us find the gears for cutting 11½ threads per inch, this being the standard number of threads for certain sizes of pipe thread. Then

$$\frac{6}{11\frac{1}{2}} = \frac{6 \times 8}{11\frac{1}{2} \times 8} = \frac{48}{92}.$$

It will be found that multiplying by any other number than 8 would not, in this case, have given us gears with such numbers of teeth as we have in our set with this lathe. Until we get accustomed to figuring of this kind, we can, of course, only by trial find out the correct number by which to multiply numerator and denominator.

The number of teeth in the *intermediate* gear F, Fig. 16, which meshes with both the spindle-stud gear and the lead-screw gear, is of no consequence.

LATHES WITH REDUCTION GEARING IN HEAD-STOCK.

In some lathes, however, there is a reduction gearing in the head-stock of the lathe, so that if equal gears are placed on the lead screw and the spindle stud, the spindle does not make the same number of revolutions as the lead screw, but a greater number. Usually in such lathes the ratio of the gearing in the head-stock is 2 to 1, so that with equal gears the spindle makes two revolutions to one of the lead screw. This is particularly common in lathes intended for cutting fine pitches or, in general, in small lathes. In figuring the gears this must, of course, be taken into consideration. As the spindle makes twice as many revolutions as the lead screw with equal gears, if the ratio of the gears be 2 to 1, that means that if the head-stock gearing were eliminated, and the lead screw instead had twice the number of threads per inch as it has, with equal gears the spindle would still revolve the same as before for each inch of travel along the piece to be threaded. In other words, the gearing in the head-stock may be *disregarded if the number of threads of the lead screw is multiplied by the ratio of this gearing.* Suppose, for instance, that in a lathe the lead screw has eight threads per inch, that the lathe is geared in the head-stock with a ratio of 2 to 1, and that 20 threads are to be cut. Then

$$\frac{2 \times 8}{20} = \frac{16}{20} = \frac{16 \times 4}{20 \times 4} = \frac{64}{80},$$

which two last values signify the numbers of teeth in the gears to use.

Sometimes the ratio of the gearing in the head-stock cannot be determined by counting the teeth in the gears, because the gears are so placed that they cannot be plainly seen. In such a case, equal gears are placed on the lead screw and the spindle stud, and a thread cut on a piece in the lathe. The number of threads per inch of this piece should be used for the numerator in our calculation instead of the actual number of threads of the lead screw. The ratio of the gearing in the head-stock is equal to the ratio between the number of threads cut on the piece in the lathe and the actual number of threads per inch of the lead screw.

Compound Gearing.

The cases with only two gears in a train referred to are termed simple gearing. Sometimes it is not possible to obtain the correct ratio excepting by introducing two more gears in the train, which, as hardly need be mentioned, is termed compound gearing. This class of gearing is shown in Fig. 17. The rules for figuring compound gearing are exactly the same as for simple gearing excepting that we must divide both our numerator and denominator into two factors, each of which is multiplied by the same number in order to obtain the change gears.

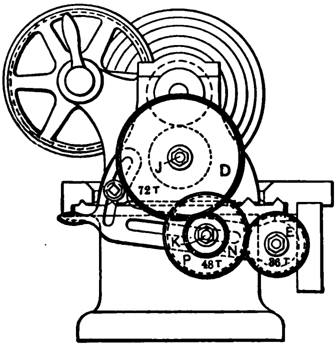

Fig. 17. Compound Gearing

Suppose a lathe has a lead screw with six threads per inch, that the numbers of the teeth in the gears available are 30, 35, 40, and so forth, increasing by 5 up to 100.

Assume that it is desired to cut 24 threads per inch. We have then

$$\frac{6}{24} = \text{ratio.}$$

By dividing up the numerator and denominator into factors, and multiplying *each pair of factors by the same number*, we find the gears:

$$\frac{6}{24} = \frac{2 \times 3}{4 \times 6} = \frac{(2 \times 20) \times (3 \times 10)}{(4 \times 20) \times (6 \times 10)} = \frac{40 \times 30}{80 \times 60}.$$

The last four numbers indicate the gears which should be used. The upper two, 40 and 30, are driving gears, the lower two, with 80 and 60 teeth, are driven gears. Driving gears are, of course, the gear D, Fig. 17, on the spindle stud, and the gear P on the intermediate stud K, meshing with the lead-screw gear. Driven gears are the lead-screw gear, E, and the gear N on the intermediate stud, meshing with the spindle-stud gear. It makes no difference which of the driving gears is placed on the spindle stud, or which of the driven is placed on the lead screw.

Suppose, for a final example, that we wish to cut $1\frac{3}{4}$ threads per inch on a lathe with a lead screw having six threads per inch, and that the gears run from 24 and up to 100 teeth, increasing by 4. Proceeding as before we have

$$\frac{6}{1\frac{3}{4}} = \frac{2 \times 3}{1 \times 1\frac{3}{4}} = \frac{(2 \times 36) \times (3 \times 16)}{(1 \times 36) \times (1\frac{3}{4} \times 16)} = \frac{72 \times 48}{36 \times 28}.$$

This is the case directly illustrated in Fig. 17. The gear with 72 teeth is placed on the spindle stud J, the one with 48 on the intermediate stud K, meshing with the lead-screw gear. These two gears (72 and 48 teeth) are the *driving* gears. The gears with 36 and 28 teeth are placed on the lead screw and on the intermediate stud, as shown, and are the *driven* gears.

FRACTIONAL THREADS.

Sometimes the lead of the thread is expressed by a fraction of an inch instead of stating the number of threads per inch. For instance, a thread may be required to be cut having a three-eighths-inch lead. In such a case the expression "three-eighths lead" should first be transformed to "number of threads per inch," after which we can proceed in the same way as has already been explained. To find how many threads per inch there is when the lead is stated, we simply find how many times the lead is contained in one inch, or, in other words, we divide *one* by the given lead. Thus *one* divided by three-eighths gives us $2\frac{2}{3}$, which is the number of threads per inch of a thread having three-eighths-inch lead. To find change gears to cut such a thread we would proceed as follows:

Assume that the lead screw has 6 threads per inch and that the change gears run from 24 up to 100 teeth, increasing by 4. Proceeding to find the gears as before we have

$$\frac{6}{2\frac{2}{3}} = \frac{2 \times 3}{1 \times 2\frac{2}{3}} = \frac{(2 \times 36) \times (3 \times 24)}{(1 \times 36) \times (2\frac{2}{3} \times 24)} = \frac{72 \times 72}{36 \times 64}.$$

The rule for finding the number of threads per inch, when the lead is given, may be expressed by the formula

$$\text{number of threads per inch} = \frac{1}{\text{lead of thread}}.$$

What has been said in the foregoing in regard to the figuring of change gears for the lathe may be summed up in the following rules:

1. To find the number of threads per inch if the lead of a thread is given, *divide one by the lead.*

2. To find the change gears used in simple gearing, when the number of threads per inch on the lead screw and the number of threads per inch to be cut are given, *place the number of threads on the lead screw as numerator and the number of threads to be cut as denominator in a fraction, and multiply numerator and denominator by the same number until a new fraction results representing suitable numbers of teeth for the change gears.* In the new fraction, the numerator represents the number of teeth on the spindle stud, and the denominator the number of teeth in the gear on the lead screw.

3. To find the change gears used in compound gearing, *place the number of threads per inch on the lead screw as numerator and the number of threads per inch to be cut as denominator in a fraction, divide up both numerator and denominator into two factors each, and multiply each pair of factors* (one factor in the numerator and one in the denominator making "a pair") *by the same number until new fractions result representing suitable numbers of teeth for the change gears.* The gears represented by the numbers in the new numerators are driving gears, and those in the denominators are driven gears.

CUTTING METRIC THREADS WITH AN ENGLISH LEAD SCREW.

It often happens that screws or taps having threads cut according to the metric system are required. The lead of these screws is expressed in millimeters. Thus, instead of saying that a screw has so many threads per inch, it is said that the screw has so many millimeters lead. Suppose, for example, that we have a lathe having a lead screw with 6 threads per inch, and that a screw with 3 millimeters lead is required to be cut. We can find the change gears to be used in the same manner as has been previously explained for screws cut according to the English system, if we only first find out *how many threads per inch we will have if we cut a screw with a certain lead given in millimeters*. Thus, in this case, we must find out how many threads there will be in one inch if we cut a screw with 3 millimeters lead. There are 25.4 millimeters to one inch, so that, if we find out how many times 3 is contained in 25.4, we evidently get the number of threads in one inch. To find out how many times 3 is contained in 25.4, we divide 25.4 by 3. It is not necessary to carry out the division. We can simply write it as a fraction in the form $\frac{25.4}{3}$, this then being the number of threads per inch. We now proceed as if we had to do only with English threads. We place the number of the threads on the lead screw in the lathe as the numerator in a fraction, and the number of threads to be cut, which number is expressed by the fraction $\frac{25.4}{3}$, as the denominator. Then we have

$$\frac{6}{\frac{25.4}{3}}.$$

This seems very complicated, but as we remember that the line between the numerator and the denominator in a fraction really means that we are to divide the numerator by the denominator, then if we carry out this division we get

$$6 \div \frac{25.4}{3} = \frac{6 \times 3}{25.4} = \frac{18}{25.4}.$$

If we now proceed as in the case of figuring change gears for any number of threads per inch we multiply numerator and denominator by the *same* number until we find suitable numbers of teeth for our gears. In the case above we can find by trial that the first number by which we can multiply 25.4 so that we get a whole number as result is 5. Multiplying 25.4 by 5 gives us 127. This means that we must have one gear with 127 teeth whenever we cut metric threads by means of an English lead screw. The gear to mesh with the 127-teeth gear in this case has 90 teeth, because 5 times 18 equals 90.

If we summarize what we have just said in rules, we would express them as follows:

1. To find the number of threads per inch, when the lead is given in millimeters, *divide* 25.4 *by the number of millimeters in the given lead.*

2. To find the change gears for cutting metric threads with an English lead screw, *place the number of threads per inch in the lead screw multiplied by the number of millimeters in the lead of the thread to be cut as the numerator of a fraction and* 25.4 *as the denominator, and multiply numerator and denominator by* 5. *The numerator and denominator of the new fraction are the gears to be used.* These same rules expressed in formulas would be

$$\text{number of threads per inch} = \frac{25.4}{\text{lead in millimeters}}$$

and

$$\frac{\begin{matrix}\text{number of threads per} \\ \text{inch in lead screw}\end{matrix} \times \begin{matrix}\text{lead in millimeters} \\ \text{of screw to be cut}\end{matrix} \times 5}{25.4 \times 5} = \frac{\text{gear on spindle stud}}{\text{gear on lead screw}}.$$

Of course it is sometimes necessary to compound the gears, because the gear on the spindle stud would otherwise get too many teeth, that is, would be too large. Suppose, for an example, that we wish to cut a screw having 6 millimeters lead on a lathe having a lead screw with 8 threads per inch. According to our rule and formula the gear on the spindle stud would then have 8 × 6 × 5, or 240 teeth. As no lathe is provided with a change gear with so many teeth, we must use compound gearing. In this case we would proceed as follows:

$$\frac{8 \times 6 \times 5}{25.4 \times 5} = \frac{48 \times 5}{127 \times 1} = \frac{48 \times 120}{127 \times 24},$$

which is exactly the same method as has already been explained under the head of compound gearing in connection with the figuring of change gears for English screws. The method of mounting these gears is shown in the diagram, Fig. 18.

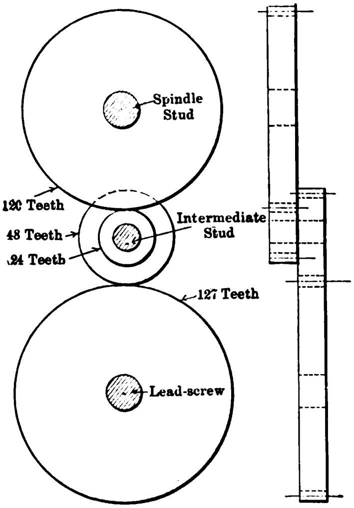

Fig. 18

What should in particular be impressed upon the mind of the student is that there is *no difference in method* of figuring the gears whether the thread to be cut is given in the English or in the metric system. If given in the latter system, simply transform the "lead in millimeters" to "number of threads per inch" and proceed in exactly the same way as if the thread had been given according to the English system.

The 127-tooth gear is always placed on the lead screw when cutting metric threads with an English lead screw.

Cutting an English Thread with a Metric Lead Screw.

The method of figuring the change gears for a case where an English screw is to be cut by a metric lead screw is simply the reverse of the one already explained. We simply transform the millimeter lead of the metric lead screw into "number of threads per inch." This we do in the same way as explained before, by dividing 25.4 (which is the number of millimeters in one inch) by the number of millimeters in the lead of the metric lead screw. After having obtained this number of threads per inch, we proceed as usual, putting the number of threads per inch of the lead screw in the numerator and the number of threads per inch to be cut in the denominator of a fraction, simplifying the fraction, and multiplying numerator and denominator by 5 to get the number of teeth in the change gears.

Suppose, for example, that we wish to cut 5 threads per inch with a lead screw having 4 millimeters lead. The number of threads per inch of the lead screw is then $\frac{25.4}{4}$, and we find our gears by writing our fraction

$$\frac{\frac{25.4}{4}}{5}.$$

This fraction can be simplified by actually dividing $\frac{25.4}{4}$ by 5, in which case we get $\frac{25.4}{5 \times 4}$ as a result.

Multiplying both numerator and denominator by 5 gives us then

$$\frac{25.4 \times 5}{5 \times 4 \times 5} = \frac{127}{100},$$

which gives us the numbers of teeth in our change gears.

The formula expressing this calculation would take this form:

$$\frac{25.4 \times 5}{\text{number of threads per inch to be cut} \times \text{lead in millimeters of lead screw} \times 5} = \frac{\text{gear on spindle stud}}{\text{gear on lead screw}}.$$

Expressed as a rule this formula would read:

To find the change gears for cutting English threads on a metric lead screw, *place 25.4 as the numerator and the threads per inch to be cut multiplied by the number of millimeters in the lead of the lead screw in the denominator of a fraction, and multiply numerator and denominator by 5. The numerator and denominator of the new fraction are the change gears to be used.*

In this case too, of course, it sometimes becomes necessary to compound the gears, in order to get gears which are to be found in the set of gears provided with the lathe. Sometimes the gears may be available, but they are so large that the capacity of the lathe does not permit them to be placed in a direct train; then, also, it becomes necessary to compound the gears. Take the case which we have already referred to, where we were to cut a screw with 5 threads per inch, using a lead screw having 4 millimeters lead. We then obtained the gears with 127 and 100 teeth respectively. Now suppose that the lathe does not possess a change gear with 100 teeth to be placed in a direct train. The gears to be used in a compound train would then have to be found as has already been described and as shown in the following calculation:

$$\frac{25.4 \times 5}{5 \times 4 \times 5} = \frac{127}{100} = \frac{127 \times 1}{50 \times 2} = \frac{127 \times 25}{50 \times 50}.$$

The 127-tooth gear is always put on the spindle stud when cutting English screws with a metric lead screw. A diagram of the arrangement of the gears in the last example is shown in Fig. 19.

If there is any special reduction gearing in the head of the lathe, this must of course be taken into consideration, in the manner already described under the heading "Lathes with Reduction Gearing in Head-Stock."

For those who prefer formulas to rules expressed in words the whole previous discussion may be simply stated as follows:

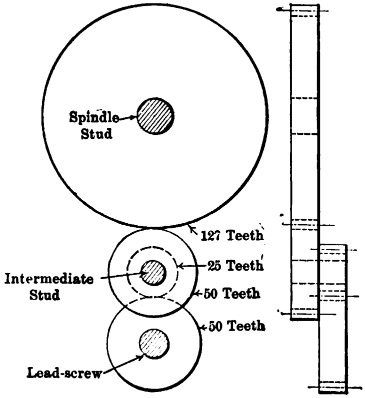

Fig. 19

Let us first take the case of an English thread to be cut on a lathe provided with a metric lead screw. As there are 25.4 millimeters in one inch, the number of threads per inch on the metric lead screw equals 25.4 divided by the pitch of the lead screw expressed in millimeters; in other words, if a is the pitch of the lead screw in millimeters and C is the number of threads per inch of same lead screw, then

$$C = \frac{25.4}{a}.$$

Let c be the number of threads per inch to be cut on the piece to be threaded; then the ratio of the change gears is

$$\frac{C}{c} = \frac{25.4 \div a}{c} = \frac{25.4}{a \times c}.$$

Change gears conforming to this ratio will cut an exactly correct pitch. Multiply both denominator and numerator by 5, thus making the formula read

$$\frac{127}{5\,a \times c}.$$

Thus it will be seen that if a gear with 127 teeth is introduced in the train of gears and other gears are selected, as indicated by the values a and c, the correct change gears can be found without any trouble whatever.

Let us assume for an example that the pitch of the lead screw (a) equals 4 millimeters, and that 5 threads per inch (c) are to be cut.

Then the ratio of gears $= \frac{127}{20 \times 5} = \frac{127 \text{ driver.}}{100 \text{ driven.}}$

If the lathe has a capacity of taking a 127- and 100-tooth gear in a direct train, these gears are used; otherwise, gears have to be compounded, and it is readily seen that trains of gears composed as follows:

$$\overset{\text{drivers}}{\underset{\text{driven}}{\frac{127 - 24}{40 - 60}}}; \qquad \overset{\text{drivers}}{\underset{\text{driven}}{\frac{127 - 30}{50 - 60}}}; \qquad \overset{\text{drivers}}{\underset{\text{driven}}{\frac{127 - 32}{64 - 50}}};$$

and many other combinations will serve the purpose, the gears above being such as generally go with any lathe. The 127-tooth gear in this case ought to be mounted on the spindle stud.

If we now take the case of a metric thread to be cut on a lathe provided with an English lead screw, we will find a formula for the ratio in the same manner.

Suppose d = the number of threads per inch on the lead screw,
e = the pitch in millimeters on the screw to be cut, and
f = the number of threads per inch of same screw.

Then referring to what has previously been said,

$f = \frac{25.4}{e}$ and the ratio of the change gears $\frac{d}{f} = \frac{d}{25.4 \div e} = \frac{d \times e}{25.4} = \frac{5d \times e}{127}$.

Then, as before, it will be readily seen that even in this case a gear with 127 teeth is necessary, and no other gear can replace it, either in the first case or in this, as 127 is a *prime factor*. In order to illustrate this formula with an example, let us assume that the lead screw has 8 threads per inch (d), and that a screw with 6 millimeters pitch (e) is to be cut. The ratio of gears is then

$$\frac{40 \times 6}{127},$$

and trains of gears composed as follows:

$$\begin{array}{ccc} \text{drivers} & \text{drivers} & \text{drivers} \\ \dfrac{96 - 90}{127 - 36}; & \dfrac{100 - 60}{127 - 25}; & \dfrac{80 - 75}{127 - 25}; \\ \text{driven} & \text{driven} & \text{driven} \end{array}$$

and others can be used in this case. Of course the 127-tooth gear ought to be mounted on the screw in this case.

General Principles of Thread-Cutting.

The operations for cutting a thread are shortly as follows. The first step is to turn to the exact outside diameter. This of course is more or less modified in the case of taps, which are often wanted to be a trifle over-size. When turning a blank to be threaded with Whitworth thread, or with any thread form with a round top, the piece should be turned from 0.002 inch over-size for quarter-inch size to 0.004 inch for 1-inch size to insure that the rounded form shall be perfect on the top of the threads. In cutting the thread, the threading tool, which will be treated in detail later, is of course the first consideration. If the tool is correct in itself, it must also, in order to produce a correct thread, be set square with the axis of the work, which is done by a thread gauge. The height of the top face of the tool should be exactly at the same height as the center line of the piece to be threaded. If it is not, the form of the thread will not be correct even if the thread tool be perfect, inasmuch as the latter must be duplicated in a plane through the center of the piece to be threaded. The thread is cut by successive small cuts; the last or finishing cuts should be made with a very fine feed to insure a smooth surface of the thread. A thin lubricant of lard oil and turpentine is excellent for thread-cutting.

Mr. F. E. Shailor, in *Machinery,* March, 1907, says that when meeting with difficulty in obtaining a smooth thread, such as is required for screw gauges and taps, one good way to obtain a smooth thread is to turn the tap nearly to size and harden it, then draw the temper to a "light blue." When turning to size, if the tool does not stand up well, draw still lower, the object being to leave just enough temper in the tap to make the steel firm. By making light chips with a hard thread tool a glossy, smooth thread will result. Another advantage gained by hardening the tap before finishing is that it will greatly eliminate the chances of the lead changing after the final hardening. It is, however, not advisable to follow this practice except in certain cases when a smooth thread is the very highest object desired, because it is well known that steel will, as a rule, lose its qualities of endurance and strength by successive hardening and annealing.

Multiple Threads. — Multiple threads, double, triple, etc., are used in cases where a quick lead is required but a deep thread is not desirable. It may be that the diameter of the screw is so small, comparatively, that a deep thread would seriously impair its strength or be entirely impossible. Two, three, or more threads of less depth but with the same lead as the coarse thread may then be substituted. This condition is plainly illustrated in the upper part, *A*, of Fig. 20. The lead of a multiple-threaded screw is the distance it will travel in the nut for one turn of the screw, or in other words, the distance from center to center of the *same* thread. The pitch is the distance from center to center of *adjacent* threads (see Fig. 20). A great deal of confusion has always existed in regard to the correct way to designate a multiple-threaded screw. The safest way is to state the lead and the class of thread, whether double or triple, etc. Thus, *one-quarter-inch lead, double,* means a screw with double thread, which, when cut, has the lathe geared for 4 threads per inch, but

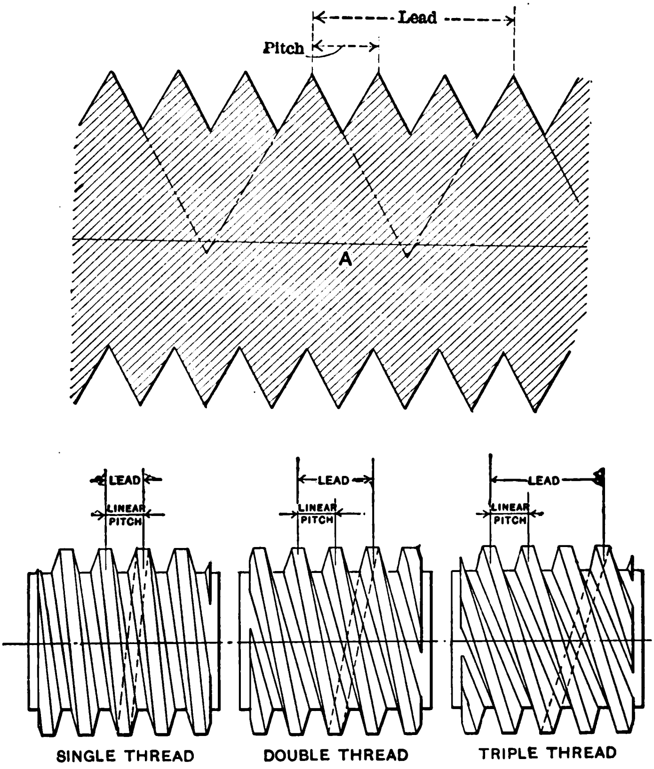

Fig. 20. Single and Multiple Threads

each thread is cut only to a depth corresponding to 8 threads per inch. This same condition is also expressed by 4 *threads per inch, double.* These two ways of expressing the number of multiple threads are both correct, but the former is always the safer to use in order to avoid misunderstandings, provided of course that the word "lead" is used and understood in its correct sense. A way of expression which under no circumstances could be misunderstood, and if misunderstood, would be inexcusable, would be to say: *one-quarter lead, one-eighth pitch, double thread.*

When cutting a multiple thread it is obvious that the lathe must be geared the same as if cutting a single thread of the same lead as the multiple one. One thread is then cut at a time, and the tool advanced after each thread an exact amount corresponding to the pitch of the screw, by disconnecting the spindle and the lead screw; the other thread is then cut independently of the first, and so forth. Multiple threads are cut even more advantageously by means of chasers having several teeth. In such a case there is no need of advancing the thread tool, as all the threads will be cut at once. The lathe must be geared, of course, to correspond to the lead of the screw to be cut, not to the pitch of the chaser. If the latter were done, a single-threaded screw would evidently result.

MEASURING THREADS.

When the thread of a screw or a tap is cut, the necessary measuring or gauging of the outside diameter as well as of the angle diameter, and the testing of the lead, is commonly the next thing required if accuracy is of importance. The outside diameter can be measured by ordinary micrometers. The angle diameter, which is the most important, must be measured by special means.

Brown and Sharpe Thread Micrometers. — The Brown and Sharpe Manufacturing Company are the originators of a system of measuring the angle diameters of taps by means of a special micrometer shown in Fig. 21. The fixed anvil is V-shaped so as to fit over the thread, while the movable point is cone-shaped so as to enable it to enter the space between two threads and at the same time be at liberty to revolve. The contact points are on the sides of the thread, as they necessarily must be if it is the angle diameter which is to be determined. The cone-shaped point of the measuring screw is slightly rounded so as to insure that the point will not bear in the bottom of the thread; there is also provision for sufficient clearance at the bottom of the V-shaped anvil to prevent the top of the thread bearing at this point.

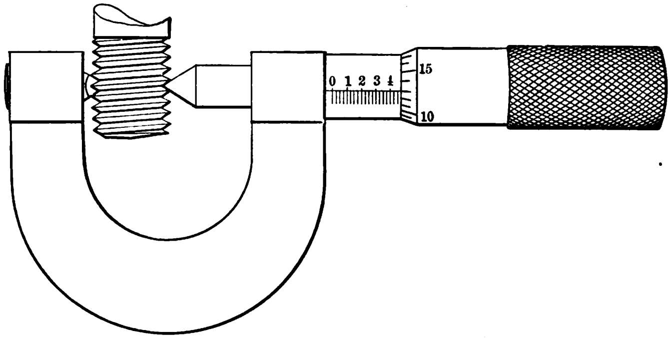

Fig. 21. Brown and Sharpe Thread Micrometer

Considering this, it is evident that the actual outside diameter of a screw or a tap has no influence upon the reading of the micrometer, and as screws, at least those made according to the United States standard system, are not intended to bear upon the top of the thread when screwed into a nut, but upon the angular sides, it is obvious that measuring in this manner constitutes the only real test of the size of a screw or tap. As we measure one-half of the depth of the thread from the top, on each side, the diameter of the thread as indicated by the micrometer, or the pitch diameter, is the full size of the thread less the depth of one thread. Referring to Fig. 22, when the point and anvil are in contact, zero on the micrometer barrel represents a line drawn through the plane *AB*, and if the caliper is opened, say to 0.500, it represents the distance of the two planes 0.500 inch apart.

While the movable point measures all pitches, the fixed anvil is limited in its capacity, for if made large enough to measure eight threads per inch it would be too wide at the top to measure twenty threads per inch, and if made to measure twenty threads per inch it would be so small that the coarser thread would not obtain a proper bearing in the anvil.

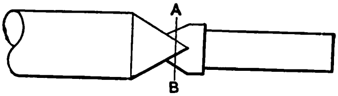

Fig. 22. Principle of Brown and Sharpe Thread Micrometer

The V anvil swivels, however, and therefore adapts itself automatically to different angles of helix of the thread. The only criticism that might be advanced in regard to this tool is that the V anvil has flat sides, which, when pressed against the helical surface of the screw thread, will theoretically cause an over-size reading. This point was not lost sight of in designing this tool, but the difference between the micrometer reading and the theoretically correct figure is so slight as to permit of being wholly disregarded in practical work.

To find the theoretical angle diameter, which is measured by the micrometer, one subtracts the depth of the thread from the standard outside diameter. The depths of the threads for all United States, V, and Whitworth standard threads were given in the first chapter. In Tables XXI and XXII in this chapter are given the angle diameters for all standard United States and V thread screws, that is, the reading of the Brown and Sharpe thread micrometer if the screw or tap is correct.

TABLE XXI.

ANGLE DIAMETERS (BROWN AND SHARPE THREAD MICROMETER READING) FOR UNITED STATES STANDARD SCREWS.

Diameter of Screw.	Thrds. per Inch.	Angle Diameter.	Diameter of Screw.	Thrds. per Inch.	Angle Diameter.	Diameter of Screw.	Thrds. per Inch.	Angle Diameter.
1/16	64	0.0524	15/16	9	0.8653	2	4 1/2	1.8557
3/32	50	0.0807	1	8	0.9188	2 1/8	4 1/2	1.9807
1/8	40	0.1088	1 1/16	7	0.9697	2 1/4	4 1/2	2.1057
5/32	36	0.1382	1 1/8	7	1.0322	2 3/8	4	2.2126
3/16	32	0.1672	1 3/16	7	1.0947	2 1/2	4	2.3376
7/32	28	0.1955	1 1/4	7	1.1572	2 5/8	4	2.4626
1/4	20	0.2175	1 5/16	6	1.2042	2 3/4	4	2.5876
5/16	18	0.2764	1 3/8	6	1.2667	2 7/8	3 1/2	2.6894
3/8	16	0.3344	1 7/16	6	1.3292	3	3 1/2	2.8144
7/16	14	0.3911	1 1/2	6	1.3917	3 1/8	3 1/2	2.9394
1/2	13	0.4500	1 9/16	5 1/2	1.4444	3 1/4	3 1/2	3.0644
9/16	12	0.5084	1 5/8	5 1/2	1.5069	3 3/8	3 1/4	3.1751
5/8	11	0.5660	1 11/16	5 1/2	1.5694	3 1/2	3 1/4	3.3001
11/16	11	0.6285	1 3/4	5	1.6201	3 5/8	3 1/4	3.4251
3/4	10	0.6850	1 13/16	5	1.6826	3 3/4	3	3.5335
13/16	10	0.7475	1 7/8	5	1.7451	3 7/8	3	3.6585
7/8	9	0.8028	1 15/16	5	1.8076	4	3	3.7835

Ball-Point Micrometers. — If one has standard plug gauges on hand, and it is thus not necessary to actually measure the angle diameter but merely compare it with the standard gauge, a ball-point micrometer, such

TABLE XXII.

ANGLE DIAMETERS (BROWN AND SHARPE THREAD MICROMETER READING) FOR STANDARD SHARP V-THREAD SCREWS.*

Diameter of Screw.	Thrds. per Inch.	Angle Diameter.	Diameter of Screw.	Thrds. per Inch.	Angle Diameter.	Diameter of Screw.	Thrds. per Inch.	Angle Diameter.
1/16	72	0.0505	15/16	9	0.8413	2	4 1/2	1.8075
3/32	56	0.0783	1	8	0.8917	2 1/8	4 1/2	1.9325
1/8	40	0.1033	1 1/16	8	0.9542	2 1/4	4 1/2	2.0575
5/32	32	0.1292	1 1/8	7	1.0013	2 3/8	4 1/2	2.1825
3/16	24	0.1514	1 3/16	7	1.0638	2 1/2	4	2.2835
7/32	24	0.1826	1 1/4	7	1.1263	2 5/8	4	2.4085
1/4	20	0.2067	1 5/16	7	1.1888	2 3/4	4	2.5335
5/16	18	0.2644	1 3/8	6	1.2307	2 7/8	4	2.6585
3/8	16	0.3209	1 7/16	6	1.2932	3	3 1/2	2.7526
7/16	14	0.3756	1 1/2	6	1.3557	3 1/8	3 1/2	2.8776
1/2	12	0.4278	1 9/16	6	1.4182	3 1/4	3 1/2	3.0026
9/16	12	0.4903	1 5/8	5	1.4518	3 3/8	3 1/4	3.1085
5/8	11	0.5463	1 11/16	5	1.5143	3 1/2	3 1/4	3.2335
11/16	11	0.6088	1 3/4	5	1.5768	3 5/8	3 1/4	3.3585
3/4	10	0.6634	1 13/16	5	1.6393	3 3/4	3	3.4613
13/16	10	0.7259	1 7/8	4 1/2	1.6825	3 7/8	3	3.5863
7/8	9	0.7788	1 15/16	4 1/2	1.7450	4	3	3.7113

as shown in Fig. 23, is all that is necessary. The balls, which are made in one piece with stems which are

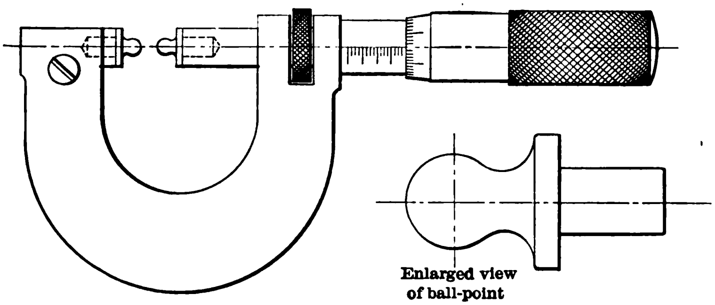

Fig. 23. Ball-point Micrometer for Comparing Angle Diameters

---

* The figures given are for the theoretical angle diameter. If the sharp V-thread for practical purposes is provided with a flat on the top of the thread, the figures for the angle diameter, as given, should be increased by an amount equal to width of flat × 1.732.

inserted in the anvil and the face of the measuring screw respectively, are made in certain sizes corresponding each to a certain series of pitches. It is evident that as the object is not measuring but only comparing the angle diameters, there is no need of the balls being in any *exact* relation to the pitch, nor does one need a certain size of ball for each pitch of thread. A certain relation between the size of the ball points and the pitch of the thread, however, must be maintained, inasmuch as the ball point used for a certain pitch must not be so large as to bear only at the top or edge of the thread and not on the sides, nor be so small as to tangent the flat in the bottom of the thread.

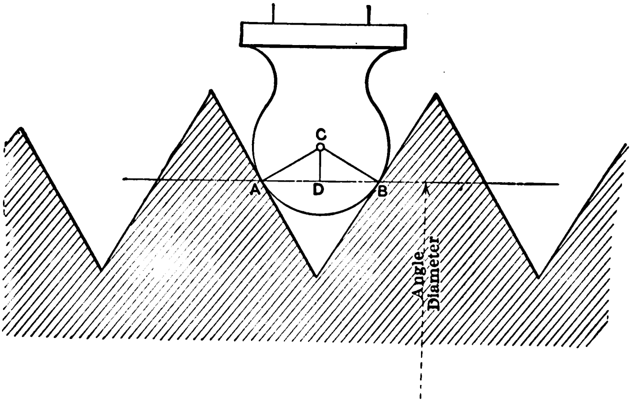

Fig. 24. Determining the Size of Ball Points

The most desirable size of ball point would of course be one that would tangent the sides of the thread at the angle diameter as shown in Fig. 24. The diameter of such a ball for the United States or V standard threads is easily figured. If the point of tangent, *A*, is located at the angle diameter of the thread, the line *AB* equals one-half the pitch. The radius *AC* of the ball point equals two times CD, if we consider only 60-degree threads, the angle DAC then being 30 degrees. Consequently, if d is the diameter of the ball point and p the pitch of the thread,

$$CD = AD \times \tan 30°,$$

$$CD = \frac{d}{4};\ AD = \frac{AB}{2} = \frac{p}{4};$$

consequently

$$\frac{d}{4} = \frac{p}{4} \times \tan 30°, \text{ or } d = p \times \tan 30°.$$

From this we see that the best size of ball point for a certain pitch is a diameter equal to 0.577 times the pitch. But ball points may be used that are only about one-third of the pitch or that are as large as to be 0.8 times the pitch in diameter. In Table XXIII are given the sizes of balls suitable for the most common numbers of threads per inch. This table applies to threads of United States standard and sharp V form.

TABLE XXIII.

BALL POINTS FOR MICROMETERS FOR COMPARING ANGLE DIAMETERS.

Threads per Inch.	Diameter of Ball.	Threads per Inch.	Diameter of Ball.
24	0.022	9	0.060
22	0.025	8	0.070
20	0.028	7	0.080
18	0.030	6	0.090
16	0.035	5½	0.100
14	0.035	5	0.110
13	0.040	4½	0.120
12	0.045	4	0.130
11	0.050	3½	0.150
10	0.055	3	0.170

Three-Wire System for Measuring Threads. — A method for measuring very correctly the angle diameter by means of ordinary micrometers and three wires of equal diameter has long been known. In this system three wires are used as shown in Fig. 25, one wire being placed in the angle of the thread on one side of the piece and the other two on the opposite side, one on each side of the corresponding thread, measuring over the whole with a micrometer. The formula for the micrometer reading is obtained as follows:

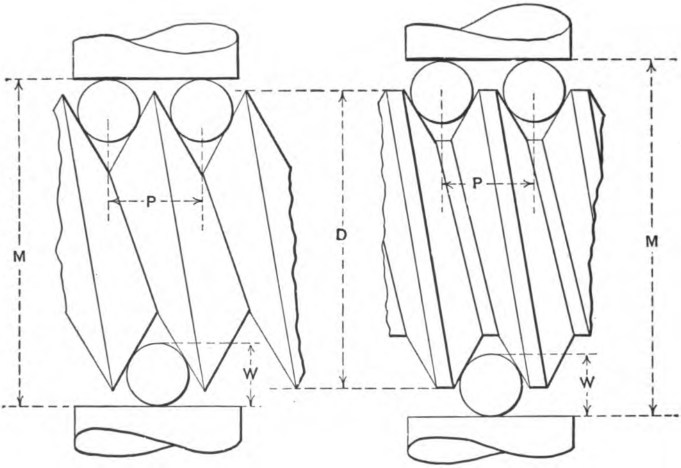

Fig. 25. Measuring Threads by the Three-Wire System

In Fig. 26 assume that m is the bottom of a V thread, the circle showing one wire in place. Then angle $a = 30°$; $\sin 30° = 0.5$; $\frac{no}{0.5} = mn$ or $2\,no = mn$. As no and np are radii of the same circle, it follows that

$$mp = 3\,no = 1\tfrac{1}{2} \times \text{diameter of wire.}$$

Multiplying by 2 to add a length mp for the opposite side gives $2\,mp = 3 \times$ diameter of wire. Hence for V thread,

$$\text{Diameter of screw} - \frac{1.732}{\text{number of threads per inch}}$$
$$+\ (3 \times \text{diameter of wire used}) = \text{micrometer reading.}$$

For United States form we have to take into account the flat at the bottom of the thread, so instead of using the United States constant 1.299 we add to it one-eighth of 1.732, or 0.2165, giving as a constant 1.5155, making the formula

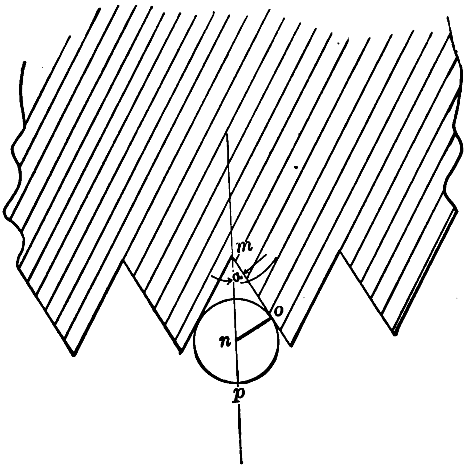

Fig. 26. Deducing the Formula for the Micrometer Reading

$$\text{Diameter of screw} - \frac{1.5155}{\text{number of threads per inch}}$$
$$+\ (3 \times \text{diameter of wire used}) = \text{micrometer reading.}$$

These formulas may be expressed in a shorter form by denoting the measurements as follows (see Fig. 25):

D = diameter of screw,
M = measurements over wires,
W = diameter of wires,
P = pitch of thread $= \dfrac{1}{\text{number of threads per inch}}$.

The following formulas will then apply to V threads·

$$M = D - 1.732\,P + 3\,W.$$
$$D = M + 1.732\,P - 3\,W.$$

The same formulas for the United States standard thread are

$$M = D - 1.5155\,P + 3\,W,$$
$$D = M + 1.5155\,P - 3\,W.$$

Suppose that we apply these formulas to a screw with United States standard thread form; the screw is 1½ inches in diameter, with 12 threads per inch. The wires used for measuring are 0.070 inch in diameter. The micrometer reading for a correct screw should then be

$$1\tfrac{1}{2} - 1.5155 \times \frac{1}{12} + 3 \times 0.070 = 1.5837.$$

If the micrometer reading happens to be 1.591 in the above case, that would indicate that the angle diameter of the screw is not correct. The amount of the error would be found by using the second formula, which gives the diameter of the screw when the dimension over the wires is known.

$$1.591 + 1.5155 \times \frac{1}{12} - 3 \times 0.070 = 1.5073 = \text{the actual}$$

diameter of the screw.

From this we see that our screw is 0.0073 too large in angle diameter. The outside diameter of course may be correct, 1½ inches, but the flat on the top of the thread may be incorrect so as to account for the difference.

The above formulas together with a table giving the values of 1.732 P and 1.5155 P for various numbers of threads were given by Mr. J. Dangerfield in the *American Machinist*, issue of May 31, 1906. The table has been extended somewhat, so as to give all standard pitches in common use. (See Table XXIV.)

TABLE XXIV.

VALUES OF CONSTANTS USED IN FORMULAS FOR MEASURING ANGLE DIAMETERS OF SCREWS BY THE THREE-WIRE SYSTEM.

No. of Threads per Inch.	V Thread, 1.732 P.	U. S. Thread, 1.5155 R.	No. of Threads per Inch.	V Thread, 1.732 P.	U. S. Thread, 1.5155 P.
2¼	0.7698	0.6736	18	0.0962	0.0842
2⅜	0.7293	0.6381	20	0.0866	0.0758
2½	0.6928	0.6062	22	0.0787	0.0689
2⅝	0.6598	0.5773	24	0.0722	0.0631
2¾	0.6298	0.5511	26	0.0666	0.0583
2⅞	0.6025	0.5271	28	0.0619	0.0541
3	0.5774	0.5052	30	0.0577	0.0505
3¼	0.5329	0.4663	32	0.0541	0.0474
3½	0.4949	0.4330	34	0.0509	0.0446
4	0.4330	0.3789	36	0.0481	0.0421
4½	0.3849	0.3368	38	0.0456	0.0399
5	0.3464	0.3031	40	0.0433	0.0379
5½	0.3149	0.2755	42	0.0412	0.0361
6	0.2887	0.2526	44	0.0394	0.0344
7	0.2474	0.2165	46	0.0377	0.0329
8	0.2165	0.1894	48	0.0361	0.0316
9	0.1925	0.1684	50	0.0346	0.0303
10	0.1732	0.1515	52	0.0333	0.0291
11	0.1575	0.1378	56	0.0309	0.0271
12	0.1443	0.1263	60	0.0289	0.0253
13	0.1332	0.1166	64	0.0271	0.0237
14	0.1237	0.1082	68	0.0255	0.0223
15	0.1155	0.1010	72	0.0241	0.0210
16	0.1083	0.0947	80	0.0217	0.0189

This system for measuring the angle diameter of thread has also been treated at some length by Mr. Joseph M. Stabel in the January, 1904, issue of *Machinery*. He shows a special micrometer gauge adapted for the purpose of measuring with the aid of three wires. This instrument is illustrated in Fig. 27. It is composed of a regular micrometer with its anvil cut off and its frame fixed into a base plate, which in turn rests upon three hardened feet. Great care should be taken when milling the slot for the micrometer frame in the base plate, as the frame must stand perfectly perpendicular with the base if accurate results in measuring are to be obtained. Upon the base plate rests the plate *b*,

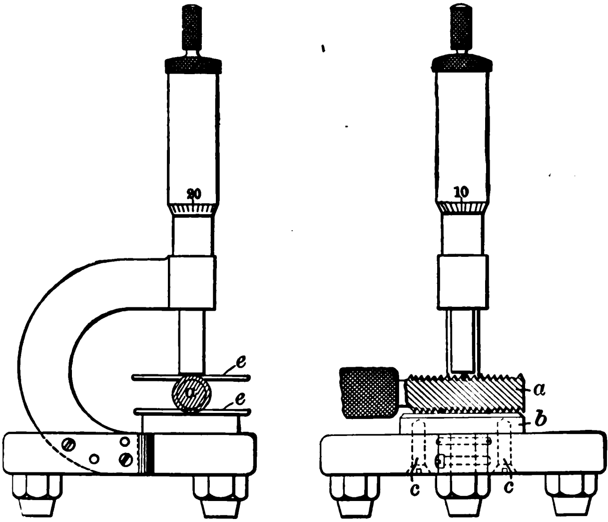

Fig. 27. Special Micrometer for Measuring Threads by Three-Wire System

which serves as the anvil of the micrometer. This anvil should be hardened, ground, and lapped perfectly parallel. It is held in position by the screws *c*. The screw holes should not pass entirely through the plate *b*, but leave the top surface of this plate perfectly solid and free from any obstructions. The wires are shown in positions at *e*. It is of course not necessary to have this special measuring instrument, as an ordinary micrometer answers the purpose for at least all fine pitches, but it is apparent that the tool shown makes this measuring very much easier to handle than it would be with regular micrometers.

In *Machinery*, March, 1907, Mr. F. E. Shailor shows a method for securing and holding the wires while measuring with ordinary micrometers. As shown in Fig. 28, the three wires are fastened in a small wooden handle. It is evident that each handle with its wires can be used only for a comparatively small number of pitches, and for diameters which are within close range. Where a great deal of measuring is to be done the arrangement shown in Fig. 27 is therefore to be recommended.

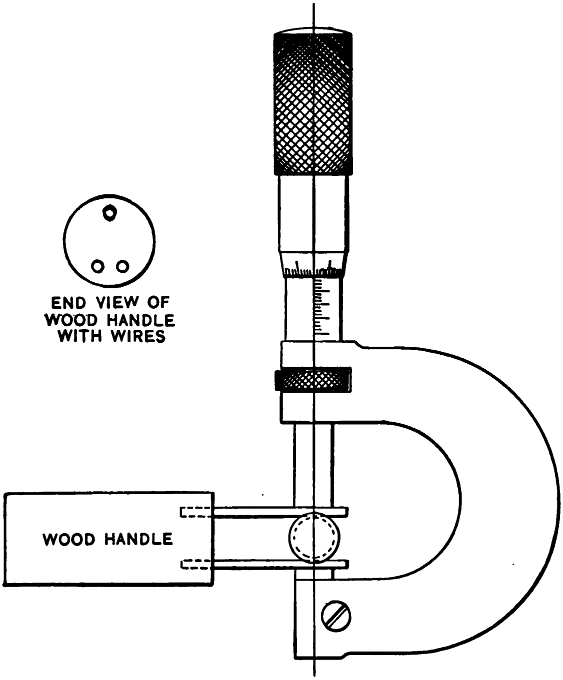

Fig. 28. Method of Holding Wires

TABLE XXV.

MEASURING V AND UNITED STATES STANDARD THREADS BY MEANS OF THE THREE-WIRE SYSTEM.

Diameter of Screw.	Number of Threads per Inch.	Diameter of Wire Used.	Dimension over Wires, V Thread.	Dimension over Wires, U. S. Thread.
¼	18	0.035	0.2588	0.2708
¼	20	0.035	0.2684	0.2792
¼	22	0.035	0.2763	0.2861
¼	24	0.035	0.2828	0.2919
5/16	18	0.035	0.3213	0.3333
5/16	20	0.035	0.3309	0.3417
5/16	22	0.035	0.3388	0.3486
5/16	24	0.035	0.3453	0.3544
⅜	16	0.040	0.3867	0.4003
⅜	18	0.040	0.3988	0.4108
⅜	20	0.040	0.4084	0.4192
7/16	14	0.050	0.4638	0.4793
7/16	16	0.050	0.4792	0.4928
½	12	0.050	0.5057	0.5237
½	13	0.050	0.5168	0.5334
½	14	0.050	0.5263	0.5418
9/16	12	0.050	0.5682	0.5862
9/16	14	0.050	0.5888	0.6043
⅝	10	0.070	0.6618	0.6835
⅝	11	0.070	0.6775	0.6972
⅝	12	0.070	0.6907	0.7087
11/16	10	0.070	0.7243	0.7460
11/16	11	0.070	0.7400	0.7597
¾	10	0.070	0.7868	0.8085
¾	11	0.070	0.8025	0.8222
¾	12	0.070	0.8157	0.8337
13/16	9	0.070	0.8300	0.8541
13/16	10	0.070	0.8493	0.8710
⅞	8	0.090	0.9285	0.9556
⅞	9	0.090	0.9525	0.9766
⅞	10	0.090	0.9718	0.9935
15/16	8	0.090	0.9910	1.0181
15/16	9	0.090	1.0150	1.0391
1	8	0.090	1.0535	1.0806
1	9	0.090	1.0775	1.1016
1⅛	7	0.090	1.1476	1.1785
1¼	7	0.090	1.2726	1.3035
1⅜	6	0.150	1.5363	1.5724
1½	6	0.150	1.6613	1.6974
1⅝	5½	0.150	1.7601	1.7995
1¾	5	0.150	1.8536	1.8969
1⅞	5	0.150	1.9786	2.0219

TABLE XXV.—*Continued.*

Diameter of Screw.	Number of Threads per Inch.	Diameter of Wire Used.	Dimension over Wires, V Thread.	Dimension over Wires, U. S. Thread.
2	4½	0.150	2.0651	2.1132
2¼	4½	0.150	2.3151	2.3632
2½	4	0.150	2.5170	2.5711
2¾	4	0.150	2.7670	2.8211
3	3½	0.200	3.1051	3.1670
3¼	3½	0.200	3.3551	3.4170
3½	3¼	0.250	3.7171	3.7837
3¾	3	0.250	3.9226	3.9948
4	3	0.250	4.1726	4.2448
4¼	2⅞	0.250	4.3975	4.4729
4½	2¾	0.250	4.6202	4.6989
4¾	2⅝	0.250	4.8402	4.9227
5	2½	0.250	5.0572	5.1438

In Table XXV are given the most common diameters and corresponding pitches, and, for given wires used in measuring, the dimension over the wires. If the sizes of wires stated are used, this table will save all figuring in the cases where the diameter and the pitch of the screw or tap to be measured can be found in the table. The dimensions are given for sharp V thread as well as for United States standard thread.

Limits for Diameter of Wires Used in the Three-Wire System. — It is evident that there are certain maximum and minimum limits for the sizes of the wire which can be used for measuring the diameters of screws and taps with the three-wire system. The most desirable size of wire would be that which is of the same diameter as the ball points for ball-point micrometers previously referred to. The wires would then tangent the sides of the thread at the points over which the angle diameter is measured. This size of wire, however, is rather small, too small, in fact, for measuring taps with sharp V thread, as the anvil and the point or face of the micrometer screw would be liable to bear upon the top edges of the thread before bearing upon the wire.

We can, however, determine the limits between which wires may be selected for each particular pitch. The limits must be such, for the minimum dimension, that the wires extend beyond the top of the thread so as to prevent

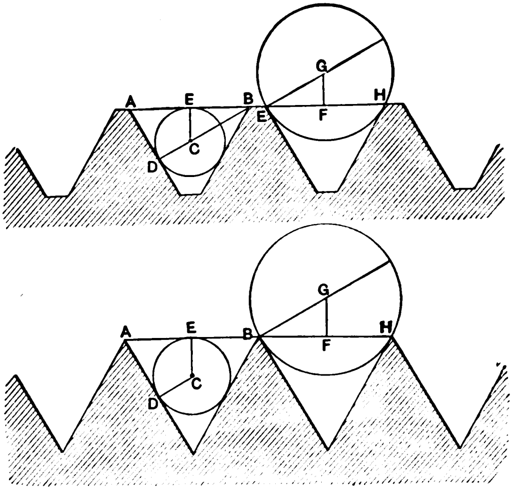

Fig. 29. Limits for Wires Used when Measuring Threads by the Three-Wire System

the micrometer bearing on the threads, as mentioned, and for the maximum limit, that the wires tangent the sides of the thread, and do not bear upon the corners or edges of the top of the thread. These maximum and minimum limits with regard to the United States and V standard threads are clearly indicated in Fig. 29.

If we first refer to the minimum size of wire for the United States standard thread, we find that to be reached when the line AB (Fig. 29) tangents the wire. The length of the side AB of the triangle into which the circle representing the wire is inscribed equals $\frac{7}{8} \times$ pitch. But $AB \times \cos 30° = BD$, and $CD = \frac{1}{3} BD$ (the radius of the circle inscribed in an equilateral triangle being equal to one-third the altitude). Consequently

$$CD = \frac{1}{3} AB \times \cos 30° = \frac{1}{3} \times \frac{7}{8} \times \text{pitch} \times \cos 30°$$
$$= 0.2526 \times \text{pitch}.$$

The minimum size of wire would then be twice this, or

$$\text{Minimum wire} = 0.5052 \times \text{pitch} = \frac{0.5052}{\text{No. of threads per inch}}.$$

The maximum size for the United States standard thread would be a wire which would tangent the thread at E and H, Fig. 29. We have here $EH = \frac{7}{8} \times$ pitch, $EF = \frac{1}{2} EH$, and $EG = \frac{EF}{\cos 30°}$. Consequently

$$EG = \frac{EH}{2 \times \cos 30°} = \frac{7}{8} \times \frac{\text{pitch}}{2 \times \cos 30°} = 0.5052 \text{ pitch}.$$

The maximum size of wire would be twice this, or

$$\text{Max. wire} = 1.0104 \times \text{pitch} = \frac{1.0104}{\text{No. of threads per inch}}.$$

In a similar manner we find the minimum and maximum wires for the sharp V thread.

$$\text{Min. wire} = \frac{2}{3} \times \text{pitch} \times \cos 30° = \frac{0.5773}{\text{No. of threads per inch}}.$$

$$\text{Max. wire} = \frac{\text{pitch}}{\cos 30°} = \frac{1.155}{\text{No. of threads per inch}}.$$

While the figures found give the extreme limits, it is evident that the wires used ought not to be near to these limits, particularly not to the larger one, as that gives a poor place for contact with the thread. We may say that if the wires vary between 0.65 × pitch and 0.9 × pitch, that will give us satisfactory results. Allowing these limits, it is evident that the same size wire may be used for a number of sizes, as is the case in Table XXV.

Formulas for Whitworth Thread. — When measuring Whitworth threads with the three-wire system the formula used is

$$\text{Diameter of screw} - \frac{1.6008}{\text{No. of threads per inch}} + (3.1657 \times \text{diameter of wire used}) = \text{micrometer reading.}$$

In other words, if

D = diameter of screw,
M = measurement over wires,
W = diameter of wires,
P = pitch of thread = $\frac{1}{\text{No. of threads per inch}}$,

then

$$M = D - 1.6008\,P + 3.1657\,W \text{ and}$$
$$D = M + 1.6008\,P - 3.1657\,W.$$

In Table XXVI are given the values of the constant 1.6008 P for various pitches.

The maximum and minimum limits of the wires used for measuring Whitworth threads are determined by the formulas

Maximum limit = 0.81 pitch and
Minimum limit = 0.51 pitch.

TABLE XXVI.

VALUES OF CONSTANTS USED IN FORMULAS FOR MEASURING ANGLE DIAMETERS OF WHITWORTH SCREWS WITH THE THREE-WIRE SYSTEM.

No. of Threads per Inch.	Whitworth Thread, 1.6008 *P*.	No. of Threads per Inch.	Whitworth Thread, 1.6008 *P*.	No. of Threads per Inch.	Whitworth Thread, 1.6008 *P*.	No. of Threads per Inch.	Whitworth Thread, 1.6008 *P*.
2¼	0.7115	5½	0.2911	18	0.0889	42	0.0381
2⅜	0.6740	6	0.2668	20	0.0800	44	0.0364
2½	0.6403	7	0.2287	22	0.0728	46	0.0348
2⅝	0.6098	8	0.2001	24	0.0667	48	0.0334
2¾	0.5821	9	0.1779	26	0.0616	50	0.0320
2⅞	0.5568	10	0.1601	28	0.0572	52	0.0308
3	0.5336	11	0.1455	30	0.0534	56	0.0286
3¼	0.4926	12	0.1334	32	0.0500	60	0.0267
3½	0.4574	13	0.1231	34	0.0471	64	0.0250
4	0.4002	14	0.1143	36	0.0445	68	0.0235
4½	0.3557	15	0.1067	38	0.0421	72	0.0222
5	0.3202	16	0.1001	40	0.0400	80	0.0200

Measuring Acme Threads with the Three-Wire System.— The three-wire system may also be used for measuring Acme threads in the angle. As there are no standard diameters corresponding to certain pitches in the Acme standard, we cannot make up a table in the same manner as we have done for the V and United States standard threads. In Table XXVII, however, all the figures necessary to facilitate measuring Acme threads with three wires are given. In the second column the size of wire to use for certain pitches is stated. The third column in the table gives the amount which must be added to the root diameter of an Acme tap or screw to find the dimension over the wires. The last column gives the amount which must be added to the standard outside diameter to find the size over the wires. The convenience of this last column is that it makes it unnecessary to find the root diameter of the screw in order to measure the angle diameter.

If it should, for instance, be desired to cut a one-inch screw or tap with six threads per inch, the only computation necessary is to add the value found in the last column in Table XXVII, opposite six threads per inch, to the outside diameter of the screw:

$$1.000 + 0.0521 = 1.0521,$$

which is the size that the screw or tap should measure over wires 0.0916 inch in diameter.

In regard to the points of tangency between the wires and the sides of the thread, these points would evidently be most correctly located if they coincided with the points over which the angle diameter is measured, that is, the points *C* and *D* in Fig. 30. This would be permissible for Acme thread screws, but in the case of taps with fine pitch the wire would be too small to reach above the top of the thread, which on Acme thread taps is 0.010 inch higher than on the screws. For this reason the points of tangency must be located a trifle further toward the top of the thread, say at *AB* (Fig. 30) which is $\frac{3}{16} \times$pitch from the top of the thread.

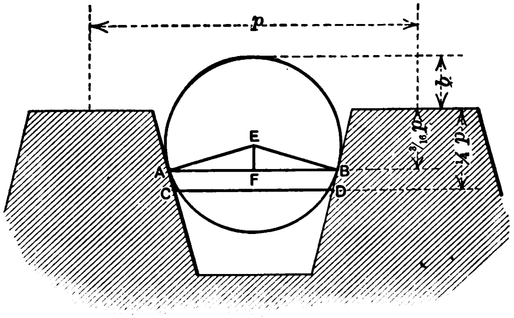

Fig. 30. Determining Formula for Measuring Acme Threads by Three-Wire System

The diameter of the wire for measuring will be found as follows. $CD = \frac{p}{2}$, if p signifies the pitch, and is located at a distance of $\frac{1}{4}p$ from the top of the thread, inasmuch as CD is at the location of the pitch line over which the angle diameter is measured.

$$AB = CD + 2 \times \frac{1}{16}p \times tg\ 14\tfrac{1}{2}°.$$

$$\text{The diameter of the wire} = \frac{AB}{\cos 14\frac{1}{2}°}.$$

Consequently

$$\text{Diam. of wire} = \frac{\frac{p}{2} + \frac{p}{8} \times tg\ 14\frac{1}{2}°}{\cos 14\frac{1}{2}°} = 0.5498\,p.$$

The diameter according to this formula is given in Table XXVII.

TABLE XXVII.

MEASURING ACME THREAD SCREWS BY THE THREE-WIRE SYSTEM.

No. of Threads per Inch.	Diameter of Wires Used.	Dimension over Wires minus Root Diam. (=2 *a*).	Dimension over Wires minus Standard Diam. (=2 *b*).	No. of Threads per Inch.	Diameter of Wires Used.	Dimension over Wires minus Root Diam. (=2 *a*).	Dimension over Wires minus Standard Diam. (=2 *b*).
1	0.5498	1.3324	0.3124	5	0.1100	0.2825	0.0625
1½	0.3665	0.8950	0.2083	5½	0.1000	0.2586	0.0568
2	0.2749	0.6762	0.1562	6	0.0916	0.2388	0.0521
2½	0.2199	0.5450	0.1250	7	0.0785	0.2075	0.0446
3	0.1833	0.4574	0.1041	8	0.0687	0.1840	0.0390
3½	0.1571	0.3950	0.0893	9	0.0611	0.1658	0.0347
4	0.1375	0.3481	0.0781	10	0.0550	0.1512	0.0312
4½	0.1222	0.3116	0.0694	12	0.0458	0.1293	0.0260

The formula for determining the distance b is easily found. Let R be the radius of the wire. Then

$$b = (R + EF) - \frac{3}{16}p.$$

But $EF = R \times \sin 14\frac{1}{2}°$, and $R = 0.2749\,p$, according to our previous formula for the diameter of wire.

Consequently

$$b = 0.1562\,p.$$

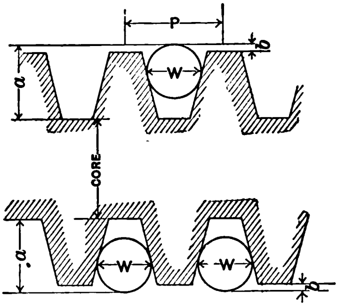

Fig. 31. Measuring Acme Threads by Three-wire System

The dimension a in Fig. 31 and Table XXVII is simply b + depth of thread, or, as given in the table, $2a = 2b$ + double depth of thread $= 2b + p + 0.020$.

The best and most handy tool for measuring the depth of Acme and square threads is the micrometer depth gauge. As this tool is fairly common in the shop, a description seems unnecessary.

Sensitive Micrometer Attachment. — When testing the diameters of taps or other pieces that are handled in great quantities and are all supposed to be within certain close limits of a standard dimension, the ordinary micrometer presents the difficulty of having to be moved for each piece, and small variations in diameters have to be carefully read off from the graduations on the barrel.

Not only does this take a comparatively long time but it also easily happens that the differences from the standard diameter are not carefully noted and pieces are liable to pass inspection that would not pass if a convenient arrangement for reading off the differences were at hand. Fig. 32 shows a regular Brown and Sharpe micrometer fitted with a sensitive arrangement for testing and inspecting the diameters of pieces which must be within certain close limits of variation. The addition to the ordinary micrometer is all at the anvil end of the instrument. The anvil itself is loose and consists of a plunger *B*, held in place by a small pin *A*. The pin has freedom to move in a slot in the micrometer body, as shown in the enlarged view in the cut. A spring *C* holds the plunger *B* up against the work to be measured and a screw *D* is provided for obtaining the proper tension in the spring. The screw and the spring are contained in an extension *E* screwed and doweled to the body of the micrometer. A pointer or indicator is provided which is pivoted at *F* and has one extension arm resting against the pin *A*, which

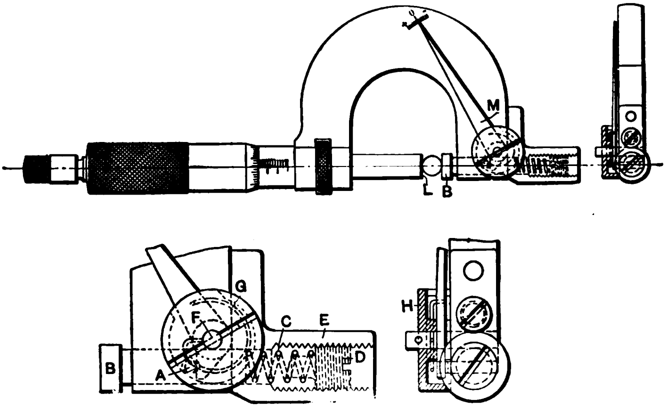

Fig. 32. Sensitive Micrometer Attachment

is pointed in order to secure a line contact. At the end of the indicator is a small scale graduated with the zero mark in the center, and as the indicator swings to one side or the other, the variations in the size of the piece measured are easily determined. A small spring *G* is provided for holding the pointer up against the pin *A*. The case *H* simply serves the purpose of protecting the spring mentioned. As the plunger *B* takes up more space than the regular anvil, the readings of the micrometer cannot be direct. The plunger *B* can be made of such dimensions, however, that 0.100 inch deducted from the barrel and thimble reading will give the actual dimensions. Such a deduction is easily made in all cases. In other words, the reading of the micrometer should be 0.100 when the face of the measuring screw is in contact with the face of the plunger; the 0.100 inch mark is thus the zero of this measuring tool.

When wanting to measure a number of pieces, a standard size piece or gauge is placed between the plunger *B* and the face *L* of the micrometer screw and the instrument is adjusted until the indicator points exactly to zero on the small scale provided on the body of the micrometer. After this the micrometer is locked and the pieces to be measured are pushed one after another between the face *L* and the plunger *B*, the indications of the pointer *M* being meanwhile observed. Whenever the pointer shows too great a difference the piece of course does not pass inspection. All deviations are easily detected, and any person of ordinary common sense can be employed for inspecting the work.

TESTING THE LEAD OF TAPS AND SCREWS.

In cases where there is no necessity of ascertaining the exact error in the lead of a screw or tap, and when only a limited number are to be tested, a fairly good test is afforded by simply screwing the thread into a female gauge. The threaded portion of this latter should then, however, be fairly long, so that errors in lead, which are liable to be very small in a short distance, may be detected by taking account of the error in the comparatively long length. Ordinarily, however, when quantities of taps are to be tested, the errors in lead are most easily ascertained by some device particularly intended for the testing of the lead of a screw thread alone. Some devices which test both the lead and the diameter within certain limits are also in use. Of these latter, two examples are shown in a report on British Standard Systems for Limit Gauges for Screw Threads, presented to the Engineering Standards Committee of Great Britain.

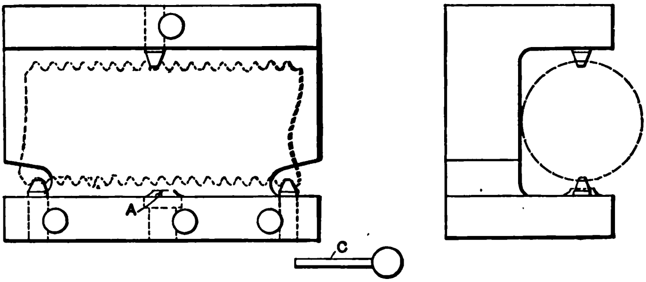

Fig. 33. British Gauge for Simultaneous Testing of Lead and Angle Diameter

TESTING THE LEAD BY GAUGES.

The first of these gauges is shown in Fig. 33. In this gauge, allowance is made for a permissible error in angle diameter and lead. As is plainly shown in the cut, the screw thread enters between three fixed points, shaped like the thread, two of which are located in the lower jaw of the gauge and one in the upper. The distance between the two points on the lower part of the gauge should be equal to about twice the diameter of the screw. The fixed point in the upper jaw should, of course, be placed midway between the points in the lower jaw. At A is shown a ground flat face which is so adjusted that the small cylinder C, of such diameter that it will touch the thread about half way down its depth, will barely enter between the flat face and the thread of the bolt for the *minimum permissible* diameter, but will "not go" as a general rule. This device then gives a practical test for both diameter and lead. If the lead were out too much, the screw would not enter the gauge, because the two points in the lower jaw would not fit the pitch of the thread, these points being, of course, set to a standard gauge. If, again, it could be conceived that the diameter was so much smaller than the standard that the screw or tap could be placed in the gauge in spite of the lead being an appreciable amount long or short, then the feeler C would enter so freely between the face A and the screw as to indicate that the screw was not within permissible limits. It will be noticed that provision is made for getting the points entering the threads placed exactly in the center of the screw. In the end view the screw is shown resting with one side up against the back of the gauge, the distance from the back of the gauge to the center of the points being equal to half the diameter of the screw. It is evident that gauges of this kind will have to be made for each different diameter and pitch.

Another form of gauge intended to deal with shorter lengths of thread than the one just described is shown in Fig. 34. In this case two separate gauges are applied, one minimum and one maximum. The screw is supposed to enter into the one and refuse to enter into the other.

In this gauge the top plates *T* are made of hardened steel and contain V teeth set as shown, the distance *L* representing the next even number of threads immediately above the number contained in a length of screw equal to the diameter of the thread, while the distance L_1 is one thread shorter. The plates are screwed, and preferably doweled, to a base plate, and are, of course, made and adjusted to a standard plug. At *s* are shown screws which can be so adjusted that the measurement can be made exactly at the center of the screw, the distance from the faces of screws *s* to the center of the gauge plates being equal to one-half the diameter of the screw.

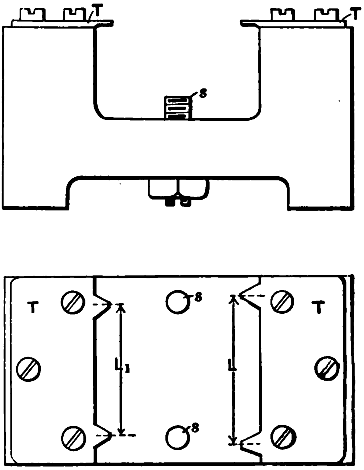

Fig. 34. Maximum and Minimum Gauge for Lead and Angle Diameter

COMPARATORS FOR THE LEAD OF TAPS AND SCREWS.

When it is wanted, however, to determine the errors in pitch with some exactitude and not to find out only whether the error is between certain limits, then the instrument termed "thread comparator" is used. This consists, in its simplest form (see Fig. 35), of a fixed block *A* and a sliding block *B* provided with ball points. The sliding block operates a pointer *C*, which on a large scale indexes the errors of lead. The manner of using this instrument is as follows. A standard plug is first placed against the device so that the ball points enter in threads, say one inch apart. The position of the pointer on the scale is noted when the standard plug engages the ball points, the free block *B* adjusting itself to the thread into which its ball point enters, and carrying with it the pointer *C*. Next the tap or screw to be tested is placed in position against the device. If the lead of this screw or tap is correct and is the same as that of the plug, the pointer will evidently occupy the same position in relation to the scale as in the case of the plug. If the tap or screw is long or short in the lead, the pointer will show the amount on the scale by swinging either to the left or to the right. The scale should, of course, preferably be graduated so as to show thousandths of an inch.

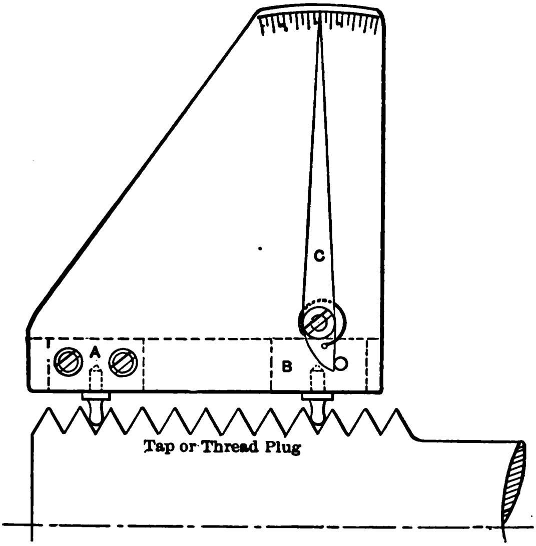

Fig. 35. Simple Form of Comparator for Lead of Screw Threads

A more elaborate device for measuring the errors in lead of taps is shown in Fig. 36. Here one ball point *A*, which we may call the fixed, is mounted in a slide *D*, which latter is operated by a knurled head screw *B*. Ball point *A* may be screwed into any of the holes *C*, which may be one-half inch apart; thus one may with this device measure the lead in one inch, or in any length up to six inches, as may be desired, by moving the ball point *A* to different positions in the slide *D*. The ball point *E* is inserted in a movable block

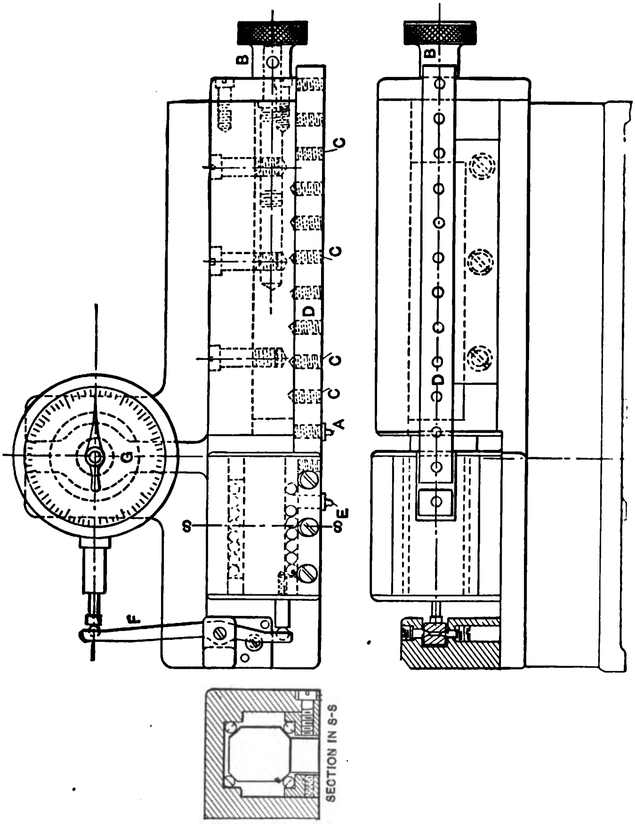

Fig. 36. Comparator for Testing Lead of Taps and Screws

resting on a ball bearing. This block, in turn, is connected through the lever *F* with the indicator or sensitive gauge *G*, which should be so arranged and graduated that thousandths of an inch can be easily read. When the standard plug is placed against this device, the ball points entering between threads in the same way as in the device previously described, the slide *D* can be so adjusted by the knurled head screw *B* that the indicator points to zero. When the screw or tap to be tested is placed against the ball points, any error will then be apparent by the motion imparted by too long or too short lead to the movable ball point *E*. This motion is, of course, carried to the indicator through the lever arm *F*. If the latter is graduated in thousandths of an inch, the graduations below or above zero will indicate the amount in thousandths of an inch that a tap or screw is short or long in the lead in the distance originally measured on the plug, *i.e.*, the distance between the ball points when the plug was placed in position against the device. In the device shown, the length of the lever *F*, between its pivot and that end which is operated by the movable block, is half of the length between the pivot and the end operating the gauge. Consequently, if the gauge be graduated to show movements of 0.001 inch on its own plunger, it will indicate a motion of 0.001 inch on the movable ball point by moving two graduations on its own scale. Very close measurements are consequently possible.

Of course this device is only one modification of the many possible for obtaining the same results. Very likely there are others equally good, but this one is shown as an example of a satisfactory design, and at the same time as an indication of the principles involved in the design of comparators for the lead of screw and tap threads.

CHAPTER III

THREADING TOOLS.—DEFINITIONS OF TAPS.

Simple Forms of Thread Tools.

Thread tools for V, United States, and Whitworth Threads.—A threading tool of the simplest form is shown in Fig. 37. This tool is provided with a shank held in the tool-post and ground on the end to the shape of the thread to be cut, in this case a sharp V thread. The tool should be ground flat on the top face *AB*, and the sides *CD* and *EF* should form an angle of 60 degrees. It should be noted that this angle must measure 60 degrees in the plane *AB*, as the angle in this plane is the one which will be duplicated in the thread-cutting. The angle between the two faces in the section *GH*, perpendicular to the line *KL*, the tool being given clearance, will be slightly more than 60 degrees. In grinding an ordinary tool as shown, it is unimportant what this latter angle is so long as the tool fits the thread gauge measured in the plane *AB*. When making special thread-cutting tools which are ground in special fixtures or grinding machines, however, the angle in the section *GH* is the one taken into account. It is, of course, of great importance that the clearance angle *KLM* should be permanently settled upon in such cases, as the difference between the angle between the faces

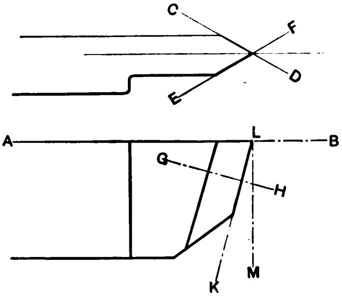

Fig. 37. Simplest Form of V Thread Tool

measured in the section *GH* and the angle measured in the plane *AB* is directly dependent upon the clearance angle. This clearance angle is usually made 15 degrees.

In the case of a United States standard thread tool, shown in Fig. 38, the difficulty of correctly measuring the flat is the one of the greatest importance. In ordinary practice this flat is made in accordance with standard thread gauges, such as are sold for instance by the Brown and Sharpe Company; but if the flat must be fully correct, as is required in thread tools manufactured for the market or for making thread gauges, a more complicated method must be resorted to. This method will be treated in detail in connection with single-point cutters used in standard thread tool holders.

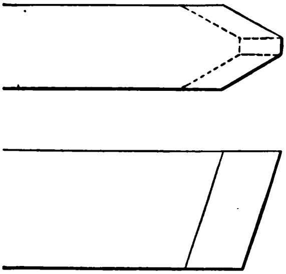

Fig. 38. Simplest Form of Thread Tool for United States Standard Thread

Thread tools for the Whitworth standard thread form in fact are forming tools. As seen from Fig. 39, the tool is provided with round corners on the sides of the tool to form the round points of the the top of the thread, while the point of the tool of course forms the actual groove or thread.

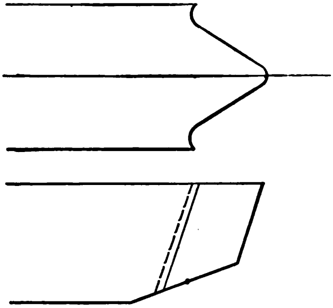

Fig. 39. Thread Tool for Whitworth Thread

Thread Tools for Square Threads.—Tools for cutting square threads must be given "side clearance" as well as clearance for the cutting edge. The latter is 15 degrees, as commonly used for all threading tools. The former depends upon the diameter of the screw to be cut and the pitch of the thread. A tool for cutting square threads is shown in Fig. 40. The angle *DCE* is the side clearance angle, or the angle which the sides of the tool must make with the vertical line in order to clear the sides of the thread in the cutting operation. This angle should be equal to the helical angle of the thread. In other words, the tangent for the side clearance angle is equal to the lead divided by the circumference of the screw, or if expressed in a formula,

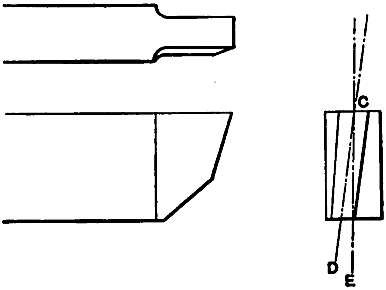

Fig. 40. Square-Thread Tool

$$\tan DCE = \frac{l}{\pi d},$$

if l equals the lead of the thread and d the outside diameter of the screw. Instead of using the outside diameter of the screw it would be more correct to use the angle diameter of the screw in the formula, although this is seldom done. In such a case the formula would be transformed into

$$\tan DCE = \frac{l}{\pi (d - \frac{1}{2}p)},$$

in which formula l and d denote the same quantities as before, and *p* the pitch of the thread. In the case of a single-threaded screw, of course, the pitch and the lead would be the same.

This clearance angle can be constructed graphically in a very simple manner. In Fig. 41, draw a line *AB* equal to the circumference of the screw and at *B* a line *BC* at right angles to *AB*; the length of *BC* should be equal to the lead of the thread. Draw a line from *A* to *C*. The angle *BAC* in the required clearance angle, provided the drawing has been made fairly accurate. This angle can be measured by means of a protractor and the tool ground according to it without the use of trigonometrical tables.

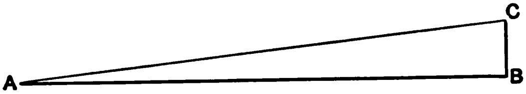

Fig. 41. Laying out the Clearance Angle for a Square-Thread Tool

Tools for the Acme standard thread are similar to those for square thread, but as a rule do not need side clearance except for steep pitches. The width of the flat is determined by a thread gauge, the same as for the United States standard thread.

THREAD-TOOL HOLDERS.

Ordinarily, however, it is cheaper to use threading tools held in special holders. The same holder can be used for all sizes of threading tools, and the tools themselves are made with a constant cross section from the beginning, so that all grinding takes place on the top of the tool, the thread form remaining perfect until the thread tool is used up by grinding. A holder which is manufactured by the Pratt and Whitney Company and universally used, is shown in Fig. 42. Threading tools for use with this holder are shown in Figs. 43 and 44. Referring to the holder it will be noticed that the tool is held in position by means of a tongue *A*, and clamped tightly by a clamp *B* and the nut *C*. An elevating screw *D* is provided by means of which the threading tool proper, which has a thread on its back part, may be raised or lowered so as always to be adjusted to its proper height. The screw *D* is stationary as far as longitudinal movement is concerned, being held in place by the pin *E*; consequently the tool will move whenever the adjusting screw is turned. The screw *F* is for adjusting the height of the clamp *B* in relation to the body of the holder, so that if the threading tool proper should be either a little too thick or too thin, a perfect bearing can still be obtained by adjusting this screw.

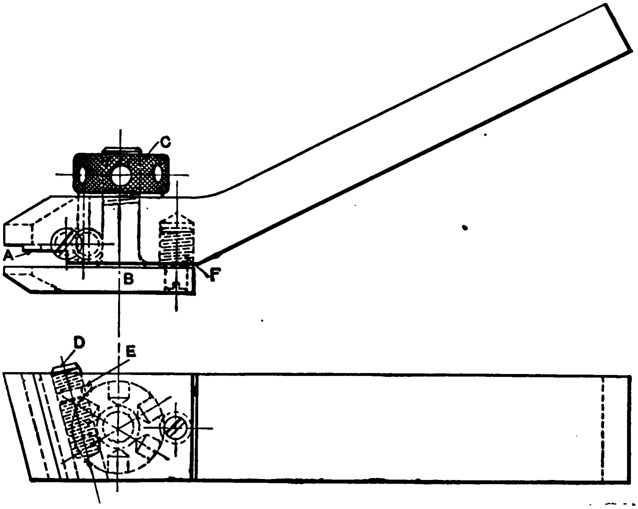

Fig. 42. Pratt and Whitney Thread-Tool Holder

Single-Point Cutters.

In Figs. 43 and 44 the ordinary thread tool or single-point cutters used with this holder are shown. The former cut shows the form of tool for all pitches smaller than 4 threads per inch, while Fig. 44 shows the tool used for coarse pitches, say from 2½ to 4 threads per inch. This form for coarse pitches is necessitated by the width of the body of the tool, which is only one-quarter inch, and it is obvious that the cutting part of the tool itself must at least be equal to the pitch, hence for pitches coarser than 4 threads per inch the front or cutting part is made seven-sixteenths inch wide.

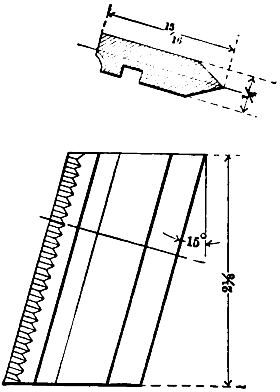

Fig. 43. Single-Point Cutter used in Pratt and Whitney Thread-Tool Holder for Pitches finer than 4 Threads per Inch

Special forms of single-point cutters are shown in Fig. 45. Here the cutting point is offset with regard to the body of the tool in order to make it possible to cut a thread close up to a shoulder. The tool to the left is termed a right-hand offset tool, and the one to the right is a left-hand offset thread tool.

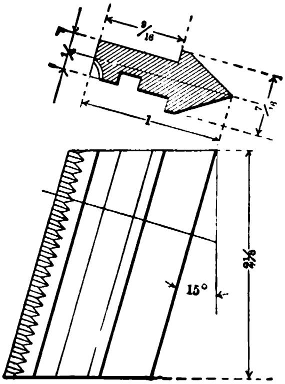

Fig. 44. Single-Point Cutter used in Pratt and Whitney Thread-Tool Holder, 2½ to 4 Threads per Inch

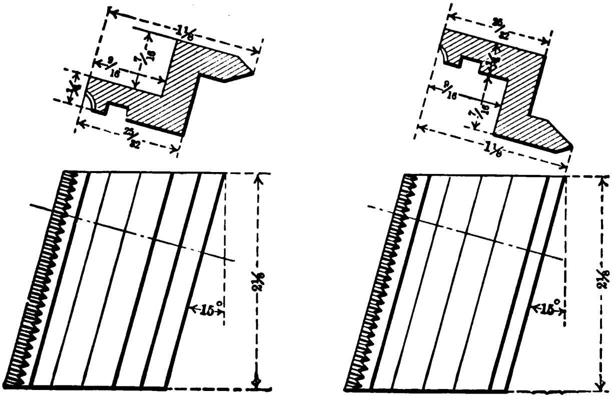

Fig. 45. Offset Single-Point Cutters

CHASERS.

In Fig. 46 is shown the common form of thread chaser used in the thread-tool holder referred to. While the part of this chaser having provision for being clamped in a holder and adjusted can be of a description to suit any holder, the part containing the thread can in all cases be made according to the dimensions given in Table XXVIII.

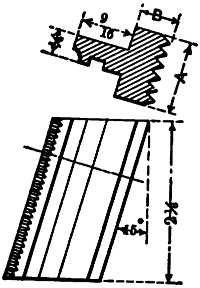

Fig. 46

TABLE XXVIII.

DIMENSIONS OF THREADING CHASERS.

No. of Threads per Inch.	A.	B.	No. of Teeth in Chaser.	No. of Threads per Inch.	A.	B.	No. of Teeth in Chaser.
3	1.333	$\frac{3}{4}$	4	12	0.667	$\frac{5}{16}$	8
$3\frac{1}{4}$	1.231	$\frac{3}{4}$	4	13	0.615	$\frac{5}{16}$	8
$3\frac{1}{2}$	1.143	$\frac{3}{4}$	4	14	0.571	$\frac{1}{4}$	8
4	1.000	$\frac{5}{8}$	4	16	0.500	$\frac{1}{4}$	8
$4\frac{1}{2}$	1.111	$\frac{5}{8}$	5	18	0.500	$\frac{1}{4}$	9
5	1.000	$\frac{1}{2}$	5	20	0.450	$\frac{1}{4}$	9
$5\frac{1}{2}$	0.909	$\frac{1}{2}$	5	22	0.409	$\frac{3}{16}$	9
6	0.833	$\frac{1}{2}$	5	24	0.375	$\frac{3}{16}$	9
7	0.714	$\frac{3}{8}$	5	26	0.385	$\frac{3}{16}$	10
8	0.750	$\frac{3}{8}$	6	28	0.357	$\frac{3}{16}$	10
9	0.667	$\frac{3}{8}$	6	30	0.333	$\frac{3}{16}$	10
10	0.700	$\frac{3}{8}$	7	32	0.312	$\frac{1}{8}$	10
11	0.636	$\frac{3}{8}$	7	36	0.278	$\frac{1}{8}$	10
$11\frac{1}{2}$	0.696	$\frac{3}{8}$	8	48	0.250	$\frac{1}{8}$	12

THE MAKING OF THREADING TOOLS.

United States Thread Tools. — The chief requirements for cutting a correct thread are correct threading tools, a correct setting of the tool, and a lathe with a reasonably accurate lead screw. In making the thread tool a correct 60-degree angle gauge is necessary. To produce such a gauge first plane up a piece of steel in the shape of an equilateral triangle as shown at *a* in Fig. 47. After hardening this triangle, grind and lap the edges until the three corner angles prove to be exactly alike when measured with a protractor. This is now the master gauge. To produce the female gauge make two pieces, one right hand and one left, like that shown at *b* in Fig. 47; harden them and lap the edges that form the 150-degree angle so that they are straight, and square with both sides. When this is done the two pieces should be screwed, and doweled to a backing plate *d* as shown in Fig. 47, using the master triangle to locate them, thus producing a practically perfect female gauge.

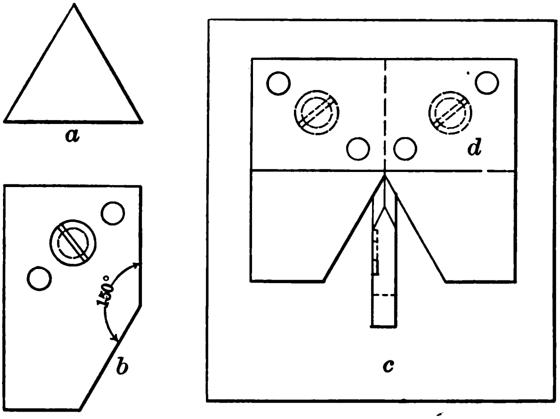

Fig. 47. Gauge for Making a 60-Degree Thread Tool

In making up the tool some form of cutter to be used in a holder should be chosen in preference to a forged tool on account of convenience in handling and measuring and the facility with which it may be reground without destroying the shape. The tool should be made so that the top will stand level when in the holder, and the clearance should be about 15 degrees, which is ample for a single thread unless the pitch is very coarse. With that amount of clearance the included angle between the sides of the tool in a plane perpendicular to the front edge is approximately 61° 44′. The tool should be planed to that angle as nearly as is possible by measuring with a protractor, then, to test its accuracy, it should be placed top down on a flat piece of glass *c* and tried with the 60-degree gauge as shown in Fig. 47. After lapping the tool until it shuts out the light when tried in this manner, the angle may be considered as nearly correct as is possible to obtain with ordinary means. To adapt the V thread tool thus made to cut the United States standard form of thread, it is only necessary to grind off the sharp edge an amount equal to one-eighth of the depth of a V thread of the required pitch, or for 20 threads per inch $\frac{0.866}{20} \times \frac{1}{8} = 0.0054$ inch. To test the accuracy of this grinding, a piece of steel should be turned up to the correct outside diameter and a short shoulder turned down at the end to the correct diameter of the bottom of the thread; then the piece is threaded and the tool fed in until the flat of the tool just tangents the shoulder. Then cut a nick in the edge of a piece of sheet steel with the threading tool. This sheet steel piece is now applied like a gauge to the threaded cylindrical piece. If the nick in the sheet steel fits the thread so that it shuts out the light, the flat of the tool is correct.

In preparing a plug gauge for threading it should be made the same as the cylindrical test piece above, with a part turned down to the root diameter of the thread, except that for V thread it is customary to leave the shoulder 0.005 inch large on account of the impossibility of producing a perfectly sharp point on the tool. The thread tool should be set level, with the top at the same height as the center line of the spindle of the lathe, otherwise the correct angle will not be reproduced. After a master plug has once been produced, it is not necessary to turn down a portion to the root diameter of the thread, as the work can be compared with the master plug by means of a micrometer fitted with either ball or V points for measuring in the angle of the thread.

It occasionally happens that a tap is to be threaded, or other external threading is to be done, of an odd size or pitch where it is desired to originate a master plug. In such cases it is best to use the three-wire system for measuring the angle of the thread.

Measuring Width of Flat on United States Standard Thread Tools. — When making United States standard threading tools, as described, it is comparatively easy to arrange for gauging the angle, but the measuring of the width of the flat is a more difficult task, if by measuring we understand the process of making sure that the flat is fully correct, and not merely comparing the thread tool we make with a manufactured thread gauge, which is a very uncertain test for accurate work. The common method already described is a "cut and try" scheme, first cutting a thread on a cylindrical piece with the tool supposed to be approximately correct, and afterward using the same thread tool with which this thread was cut to plane a groove in a flat piece of steel. The groove in the flat piece of steel is then a duplicate of the thread previously cut and should also be an exact duplicate of the section *GACF* of the thread cut on the cylindrical piece. (See Fig. 48.) When testing, if the groove proves to be an exact duplicate of the thread form, the flat evidently is correct, inasmuch as the flats at the bottom and at the top of the thread are alike, it being supposed that the angle was previously tested and found correct. However, if the groove in the flat steel piece does not exactly fit the section of the thread on the cylindrical piece, it is necessary to grind the tool again and make another trial, continuing this until a tool with a correct flat is produced. The ideal

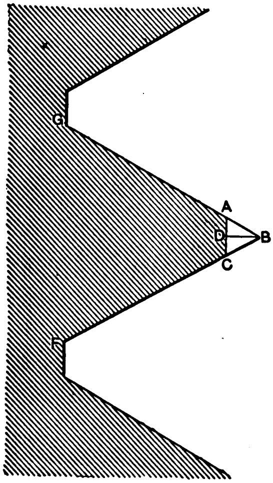

Fig. 48. Section of U. S. Standard Thread

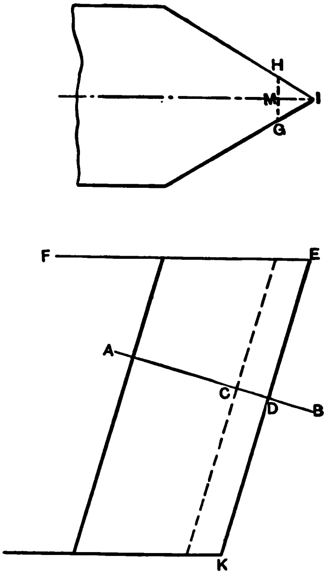

Fig. 49. U. S. Standard Thread Tool before Grinding Flat

method would be to measure the flat by micrometers, if that could be done, in which case there would be no uncertainties, and a correct tool could be produced more directly and with less work. It is, of course, not possible to measure with micrometers the distance *AC* in Fig. 48, as such a measurement would be at best uncertain for large pitches, and absolutely impossible to make on smaller ones, even when using an eyeglass. If, however, the vertical distance BD from the top of the thread down to the flat can be measured, the width of the flat is easily figured, as for a United States standard thread,

$$AG = 2\,BD \times \tan 30^\circ.$$

This distance cannot, of course, be measured with ordinary micrometers, but a micrometer can be simply designed which may be used for obtaining this distance. Such a micrometer is shown in Fig. 50. If it were only a case of measuring a threading tool without clearance, the angle CBD in Fig. 50 would simply need to be 60 degrees, and the micrometer so graduated that the reading would be zero when the face A of the measuring screw was exactly in line with the point B of the angle CBD. When

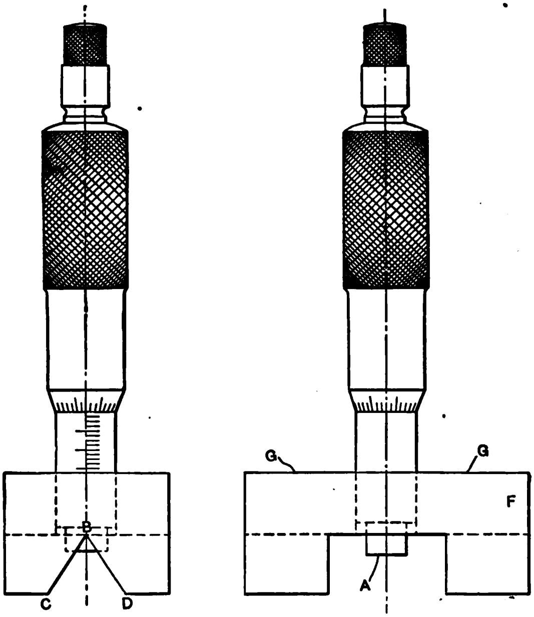

Fig. 50. Micrometer for Measuring Flat of Thread Tools

wanting to measure the width of the flat of a threading tool, the tool would be placed in the angular space provided for it and the micrometer adjusted until the face of the measuring screw would touch the flat. The reading should then be multiplied by two times the tangent for 30 degrees, or 1.155.

As the threading tool is provided with clearance, the case, however, is not quite so simple, but still presents no actual difficulties. Referring to Fig. 49, where a threading tool is provided with 15 degrees clearance, it is evident that the measurement taken by the micrometer will have to be along the line *CD* in a plane *AB* at right angles to the line *EK*. The length of the line *CD* is equal to *MI* multiplied by cosine of 15 degrees, or, reversing the expression,

$$MI = \frac{CD}{\cos 15^\circ}.$$

The width of the flat *HG* again is equal to 2 × *MI* × tangent for 30 degrees. Thus:

$$HG = 2 \times \frac{CD}{\cos 15^\circ} \times \tan 30^\circ,$$

or in other words, the width of the flat of the threading tool equals two times the distance measured by the micrometers in the plane *AB* divided by cosine of 15 degrees, the quotient multiplied by the tangent for 30 degrees. We naturally would reverse the formula when wanting to produce a threading tool for a given pitch, the width of the flat *HG* being then given from the beginning and the distance we require to know being *CD*. Knowing this distance, we can grind down the sharp V tool until we read off on the micrometer the required figure for *CD*. The formula for determining *CD* is

$$CD = \frac{HG}{2} \times \cot 30^\circ \times \cos 15^\circ.$$

For United States standard thread,

$$HG = \frac{1}{8} \times \frac{1}{\text{number of threads per inch}}.$$

If N denotes the number of threads per inch, the formula may be written:

$$CD = \frac{\cot 30^\circ \times \cos 15^\circ}{16\,N}.$$

In Table XXIX the values of CD are given for a number of United States standard pitches when the clearance angle of the tool is 15 degrees.

TABLE XXIX.

MICROMETER READINGS FOR MEASURING THE FLAT OF UNITED STATES STANDARD THREAD TOOLS.

Clearance angle 15 degrees.

No. of Threads per Inch.	Micrometer Reading.	No. of Threads per Inch.	Micrometer Reading.	No. of Threads per Inch.	Micrometer Reading.
2¼	0.0465	9	0.0116	34	0.0031
2⅜	0.0440	10	0.0105	36	0.0029
2½	0.0418	11	0.0095	38	0.0027
2⅝	0.0398	12	0.0087	40	0.0026
2¾	0.0380	13	0.0080	42	0.0025
2⅞	0.0364	14	0.0075	44	0.0024
3	0.0349	15	0.0070	46	0.0023
3¼	0.0322	16	0.0065	48	0.0022
3½	0.0299	18	0.0058	50	0.0021
4	0.0261	20	0.0052	52	0.0020
4½	0.0232	22	0.0048	56	0.0019
5	0.0209	24	0.0044	60	0.0017
5½	0.0190	26	0.0040	64	0.0016
6	0.0174	28	0.0037	68	0.0015
7	0.0149	30	0.0035	72	0.0015
8	0.0131	32	0.0033	80	0.0013

Referring now to Fig. 50, the micrometer consists of an ordinary micrometer head fitted into a block F. This block is provided with an angular groove CBD to receive the tool. The angle to which to plane this block equals

61° 44′, which is the angle between the faces *IH* and *IG* in Fig. 49, measured in the plane *AB*. In the center of the block, where the micrometer head is attached, part of the block is cut away, leaving a free view of the tool and the face of the measuring screw when the former is placed in position for measuring. The micrometer head employed may be an ordinary one with regular graduations, in which case the reading of the micrometer must be carefully noted when the face *A* of the screw is in line with the point *B* of the angular groove, but it is still better, if one wants to go to the expense, to make the head with a special graduation having the zero mark where the face and point of the angle coincide. In this latter case the graduations would evidently be made in a direction opposite to the one on an ordinary micrometer barrel. In the former case it would be necessary to subtract the measured reading from the reading when *A* and *B* coincide in order to obtain the length of the line *CD* in Fig. 49. To facilitate the holding of the tool when measuring, it is advisable to knurl it on the top at *G*.

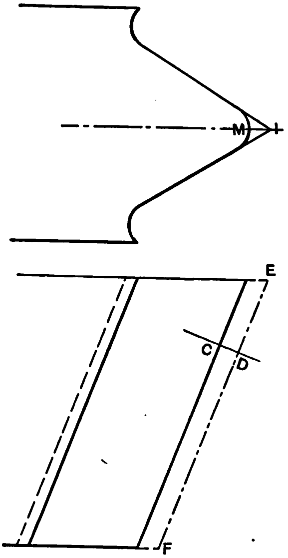

Fig. 51. Whitworth Standard Thread Tool

This manner of measuring can be conveniently employed when testing or inspecting tools with round points like the tools used for originating the thread tools used to cut the Whitworth or the British Association standard thread. In this case the length of a line *CD* from the point I to the highest part M of the radius measured in a plane at right angles to EF as shown in Fig. 51, must be determined. The angle CBD (Fig. 50) of the block must of course be made according to the angle of the thread which is measured. If the angle of the thread is v, the angle CBD is determined from the formula

$$\tan\frac{CBD}{2}=\frac{\tan\frac{v}{2}}{\cos 15^\circ},$$

provided that the clearance angle is 15 degrees. The values for the length of the line CD measured on a tool with 15 degrees clearance angle are given in Table XXX for the Whitworth standard thread and in Table XXXI for the most common pitches of the British Association standard thread.

TABLE XXX.

MICROMETER READINGS FOR TESTING WHITWORTH FORM OF TOOL.

Clearance angle 15 degrees.

No. of Threads per Inch.	Micrometer Reading.	No. of Threads per Inch.	Micrometer Reading.	No. of Threads per Inch.	Micrometer Reading.
2¼	0.0687	9	0.0172	34	0.0045
2⅜	0.0651	10	0.0155	36	0.0043
2½	0.0619	11	0.0141	38	0.0041
2⅝	0.0589	12	0.0129	40	0.0039
2¾	0.0562	13	0.0119	42	0.0037
2⅞	0.0538	14	0.0110	44	0.0035
3	0.0515	15	0.0103	46	0.0034
3¼	0.0476	16	0.0097	48	0.0032
3½	0.0442	18	0.0086	50	0.0031
4	0.0387	20	0.0077	52	0.0030
4½	0.0344	22	0.0070	56	0.0028
5	0.0309	24	0.0064	60	0.0026
5½	0.0281	26	0.0059	64	0.0024
6	0.0258	28	0.0055	68	0.0023
7	0.0221	30	0.0052	72	0.0021
8	0.0193	32	0.0048	80	0.0019

TABLE XXXI.

MICROMETER READINGS FOR TESTING BRITISH ASSOCIATION FORM OF TOOLS.

Clearance angle 15 degrees.

British Asso. No.	Micrometer Reading.	British Asso. No.	Micrometer Reading.	British Asso. No.	Micrometer Reading.
0	0.0102	9	0.0040	18	0.0015
1	0.0092	10	0.0036	19	0.0014
2	0.0083	11	0.0032	20	0.0012
3	0.0075	12	0.0029	21	0.0011
4	0.0068	13	0.0025	22	0.0010
5	0.0060	14	0.0023	23	0.0009
6	0.0054	15	0.0021	24	0.0008
7	0.0049	16	0.0019	25	0.0007
8	0.0044	17	0.0017	....	....

Making Whitworth Thread Tools.—While the development of a correct United States or V-thread tool is a thing requiring a great deal of skill and patience, it is easy compared to the task of producing a tool. for the round top and bottom thread, of which the Whitworth and British Association standards are the leading examples. In testing for accuracy, threads of this type are not only measured by gauges and micrometers, but the curves must match the angle so evenly that when the male gauge is tried in the female from either end no difference can be detected. The difficulty attending this will be better appreciated when it is known that some of the leading tap and die manufacturers of this country and Europe have failed in producing threads that would pass the British government's inspection.

It may be laid down as a cardinal principle that the best results are obtained by developing the form first with a flat top and bottom as in the United States thread, rounding the corners afterward. The first step of all is to produce a correct angle gauge; assuming that we are to work out the Whitworth thread, this would be a gauge measuring 55 degrees. Make and harden a steel triangle, *A*, Fig. 52, with the angle *x* as near 55 degrees as is possible by using a bevel protractor; the other two angles are to be equal. Then make an angle iron *B*, making sure that *ab* and *cd* are parallel, and that *be* is square with *ab*. Assuming that *C* and *D* are accurate two-inch and one-half-inch plugs, we put in the pins *E*, *E* in such a position that a line drawn through the centers of *C* and *D*, at right angles to their axes, will make an angle of 27½ degrees with *ab*. This can be done by figuring the distance *fg* as follows: In the triangle *lhk*, *hk* = 1 − 0.25 = 0.75 inch.

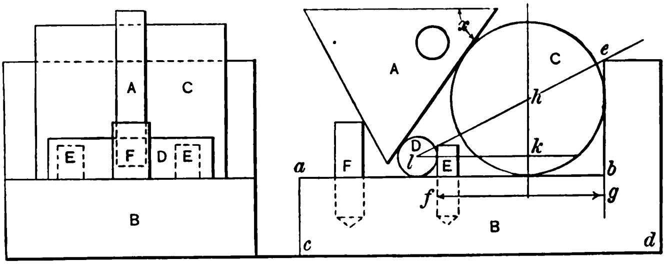

Fig. 52. Making Angle Gauge for Whitworth Thread Tool

$$lk = \frac{0.75}{\tan 27\tfrac{1}{2}^\circ} = \frac{0.75}{0.5206} = 1.4406 \text{ inch.}$$

$$1.4406 + \tfrac{1}{2} \text{ diameter of } C - \tfrac{1}{2} \text{ diameter of } D = 1.4406 + 1 - 0.25 = 2.1906 \text{ inch} = fg.$$

Set the pin *F* near enough to *D* to keep the corner of the triangle from striking the angle iron *B*. Mount the triangle *A* as shown, and set up the fixture on surface grinder table, using a toe strap in the small hole in *A* to hold it in position, and grind first one edge, then the other. This gives us the male angle gauge. A female gauge can now be made from this by the method described in connection with United States standard thread tools.

The tools to be used in making the thread tool (see Fig. 53) include an angular tool with a flat point, the width of the point to be such that it reaches to the center of the round in the bottom of the thread, the angle of the tool matching the gauge previously made; a female radius tool for forming the point; and a male radius tool for the side radii. For convenience in measuring and getting the exact form required, these tools should be made with the top square with the face at the cutting edge, *i.e.*, without clearance. The sides and back of all should be ground as well as the top. The tool *a* can be ground by means of an angular block made in the same manner as the male angle gauge and should be finished by lapping. The tool *b* can be made in two pieces, one a hardened, ground, and lapped wire, and the other a soft piece made up in such shape that the wire can be soldered or otherwise firmly fastened to it in the correct position. The tool *c* should be made up first as at *c′* and hardened. Then lap the hole carefully to size and grind the outside. After measuring the distance from the hole to the back of the tool, the front can be ground off to *ef* and the

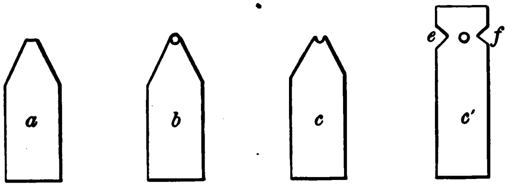

Fig. 53. Tools for Making Whitworth Thread Tools

bevels ground until the depth of the round part is right.

We now require a shaper with an apron made up to hold the tool holder at an angle of 15 degrees, as shown in Fig. 54. The apron should fit the clapper box perfectly. If it does not, it is better to fasten it solid and let the tools drag back through the cut, sharpening the tools over again before finishing. Otherwise one runs the risk of side shake. With this angular apron we can use the tools made without clearance to produce a tool with correct clearance for the lathe. Two thread-tool blanks, one, *a*, of tool steel and one, *b*, of machinery steel, should be set up on the table adapter as shown in the cut with spacing-

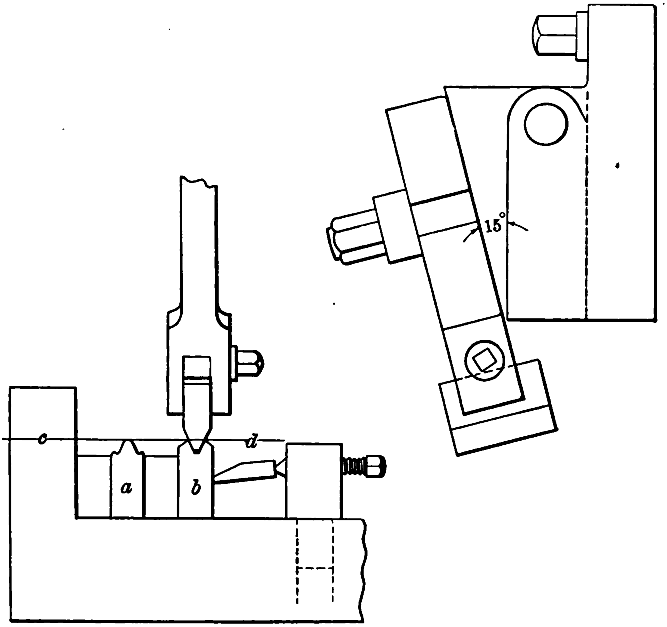

Fig. 54. Method of Planing a Whitworth Thread Tool

parallels between to avoid interfering with one while planing the other. The blanks should be planed off to exactly the same height, and all measurements for height should be figured from the line *cd*, allowance being made for the difference caused by the 15-degree clearance. Then, after carefully measuring the tools previously made to determine where the exact center is, we can start forming the blanks, setting the tools sidewise successively by positive measurement from the rib of the adapter. The angular tool comes first, and with it we plane down the sides of the tool *a* and the center of *b* so that the point of the tool just reaches the center of the radius. Then using the female radius tool we round the point of *a* and the two points of *b*, coming down until the circle of the tool is just tangent to the top of the blanks. The male tool will round out the two lower corners of *a* and the center of *b*, being fed down to exact depth.

We now have the thread tool *a*, which can be hardened and the machinery steel blank used as a lap to correct errors in it, reversing the lap occasionally, and using oilstone powder or other fine abrasive as the cutting medium. Great care must be used in putting on the abrasive, as in all lapping operations of this kind points and corners are apt to lap faster than wide surfaces. This operation does not really correct the tool, but equalizes the errors due to imperfect matching of the different cuts, and it can be done so effectively that whatever errors of that kind are left cannot be detected.

To test the tool, turn up a blank plug with a teat equal to the diameter at the bottom of the thread. When this is threaded, the point of the tool should touch the teat just as the outer corners touch the top of the thread. In the angle, the thread should measure by wires according to the formula

$$\text{Diameter of screw} - \frac{1.6008}{\text{number of threads per inch}} + (3.1659 \times \text{diameter of wire used}) = \text{micrometer reading.}$$

For the final test of the fit of the curves with the angle, a tap must be threaded with the tool, and a female gauge tapped with the tap. The plug made before must screw into this with an equal amount of friction from either end and show a full contact on the thread. If this last test is not successful it shows that the lapping is not good enough and must be done over. If the plug does not measure right it is necessary to go back to the planing and plane up another tool, making such allowances as one judges will correct the error. It is sometimes necessary to do this several times before a perfect tool is produced. In the use of the tool in the lathe great care is necessary to see that it is set at the center of the spindle, and so that the two side curves will scrape the top of the thread at the same time. With the exception of making the angle gauge and tool-grinding block, this whole procedure has to be carried out for every pitch required.

Thread Tools with Side Clearance.

The tool most commonly used requiring side clearance is the square-thread tool. We have previously referred to the method of determining the amount of this clearance. Acme thread tools for steep pitches often also require side clearance, and as the matter of determining the exact amount of this is more complicated than in the former case, a more detailed analysis is necessary.

In figuring the side clearance as well as the angle to which to plane threading tools, the angle of clearance is, of course, the determining factor. In Fig. 55 a diagram illustrating the planing of thread tools is shown. By means of the formulas on next page the angles to which the planer or shaper head should be set can be easily determined. By reference to the diagram, the formulas are readily understood. The expressions "the leading" and "the following" side of the tool may need a short explanation. The former indicates the side of the tool which first enters the work when a thread is cut; the latter, of course, is the side which would last leave the work if it is supposed that the tool traveled along the full length of the work.

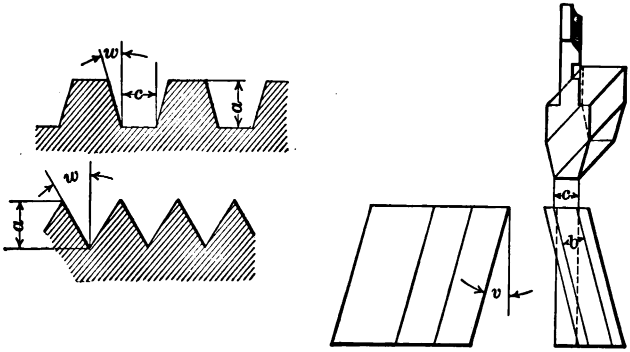

Fig. 55. Tool with Side Clearance

The diagrams and the formulas are given with special reference to the tools used in the Pratt and Whitney thread-tool holder, this holder being the one most used in general practice. Evidently the formulas are equally applicable to any thread tool which can be planed or shaped in a similar manner to the one particularly referred to.

If we first consider a tool with side clearance, as shown in the cut, we will first find it necessary to determine the angle of the helix of the thread, the same as for square-thread tools mentioned in the first pages of this chapter.

In the formulas,

a = depth of thread,
b = width of flat on offset tool,
c = actual width of flat,
d = outside diameter of screw,
v = clearance angle,
w = one-half angle of thread,
y = angle of helix,
x = normal angle (to which to set planer head when planing tool on side).

For finding the angle of helix of the thread we have then

$$\tan y = \frac{\text{lead of thread}}{(d - a)\,\pi}.$$

For the normal angle we have

$$\tan x = \frac{\cos y \pm (\cot w \times \sin v \times \sin y)}{\cot w \times \cos v}.$$

Use + for leading side and − for following side.

For Acme (29 degrees) thread and 15 degrees clearance angle, the formula can, for all practical purposes, be written

$$\tan x = \frac{\cos y \pm \sin y}{3.735}.$$

The width of flat on the offset tool is figured from the formula $b = c \times \cos y$.

If the tool has no side clearance, the angle of helix can be considered = 0 degrees, and above formula reduces itself to $\tan x = \frac{\tan w}{\cos v}$.

For 60-degree screw thread, United States standard, the formula will thus have this appearance:

$$\tan x = \frac{\tan 30^\circ}{\cos 15^\circ} = 0.5977;\ x = 30^\circ\ 52'.$$

In this latter case the width of flat of tool (*c*) remains unchanged.

It will be noticed that formulas are given first for "tools with side clearance" and second for "tools without side clearance." Of course any thread tool ought to be given a side clearance, the amount of which depends on the angle of helix of thread to be cut; but on account of the small angle of helix on fine-pitch threads the necessity of using a tool with side clearance in such cases is reduced to a minimum, and can for practical reasons be dispensed with, the clearance of 15 degrees in the front of the tool being sufficient to carry the parts of the tool not cutting far enough back so as not to interfere with the thread.

THREADING TOOLS FOR TAPER TAPS.

Threading tools for taper taps may, in fact, be said to constitute a class by themselves, particularly if the threading tool be a chaser. The cutting of taper-threaded taps, such as pipe taps, with chasers is more or less common in shops where taper taps are manufactured, but the operation usually causes some difficulties. In itself the problem is very simple and the difficulty has probably originated in an insufficient analysis of the subject. We will consider the conditions of cutting a taper thread with a chaser, and particularly consider the case of a pipe tap with a total taper of three-quarters inch per foot, cut with a chaser supposed to be held in a threading tool holder. In Fig. 56 a chaser is shown such as would be held in the threading-tool holder made by the Pratt and Whitney Company. It is evident that if either a single-point cutter or a chaser used for ordinary straight-thread cutting were put in a holder and the holder swiveled around so as to present the chaser to the work at right angles to the outside of the tapered blank to be threaded, the thread formed would not be correct, inasmuch as a line drawn through the center of the thread perpendicular to the axis of the tap would not bisect the angle of the thread. This last condition, that the line perpendicular to the axis of the tap should bisect the angle of the thread as shown in Fig. 56, is the main requirement for producing a correct thread on a tapered piece. In order to produce such a thread with a chaser, the chaser must be made in a way specially adapting it for this class of work only. There are two ways in which such a chaser can be made, depending upon the way in which the chaser is to be presented to the work. In the first place, the chaser may

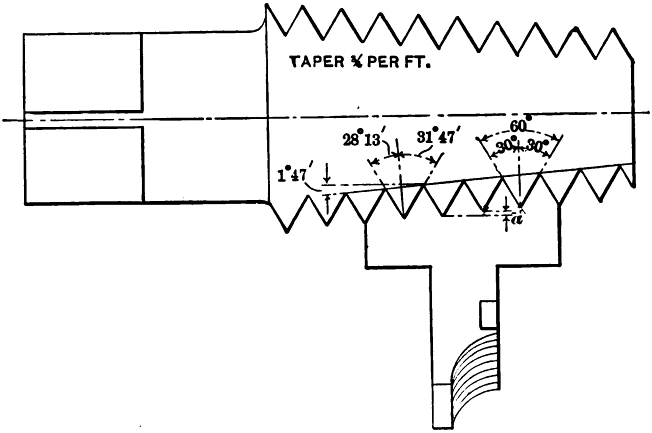

Fig. 56. Taper Tap cut with Chaser made According to the Method shown in Fig. 57

be presented to the work perpendicular to the axis of the tap, as shown in Fig. 56, or the chaser may be presented perpendicular to the outside surface of the tap blank, as shown in Fig. 59.

We will first discuss the former case. If the chaser were not provided with clearance it is evident that the milling cutter for milling the grooves in the chaser would be a 60-degree angular cutter, being 30 degrees on each side. The chaser would be held in the vise as shown in Fig. 57 and the cutter fed down, for each consecutive tooth cut, an amount depending upon the taper and the pitch of the thread. The values of *a* (Fig. 56) for pipe thread and other common taper tap pitches, when the taper is ¾ inch per foot, are as follows:

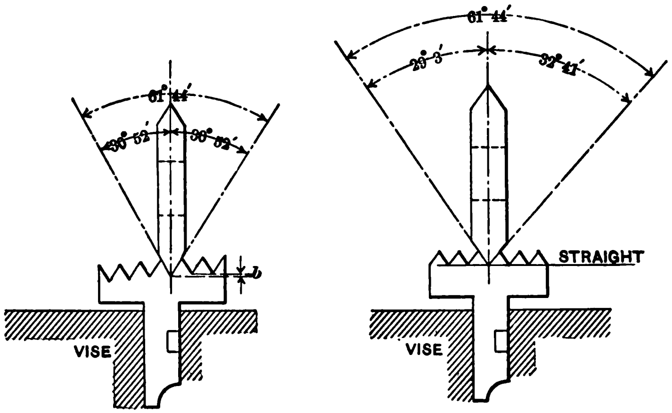

Fig. 57 Fig. 58

Two Methods of Milling the Teeth of Chasers for Taper Taps

Threads per Inch.	*a*
8	0.0039
11½	0.0027
12	0.0026
14	0.0022
18	0.0017
27	0.0012

However, as the chaser must be made with 15 degrees clearance, the milling cutter cannot be made 60 degrees, but must be made 61° 44′, this being the angle between the two sides of a single-point cutter with 15 degrees clearance angle, if measured in a plane at right angles to the front face of the tooth. The arrangement for holding the chaser when milling, and the angles required for the milling cutter, are shown in Fig. 57. The feeding down of the cutter will not equal *a* (Fig. 56) on account of the 15-degree clearance angle, but will be equal to $a \times \cos$ 15 degrees. This distance is shown as *b* in Fig. 57. The values of *b* for various pitches are given below:

Threads per Inch.	*b*
8	0.0038
11½	0.0026
12	0.0025
14	0.0021
18	0.0016
27	0.0011

While *b* is theoretically different from *a*, it will be seen by comparing the two tables that the difference is so small as to be insignificant for all practical purposes.

We will now consider the case where the tap is cut with a chaser at right angles to the outside tapered surface of the blank. We will find that in cutting this chaser with a milling cutter and holding it as shown in Fig. 58, we will not need to feed down the milling cutter for each consecutive tooth to be cut, but the milling cutter itself must be provided with different angles for the different sides of the thread. In Fig. 59 the actual angles of the sides of the thread with a line perpendicular to the outside surface of the blank are given as 28° 13′ and 31° 47′, respectively, the sum of these angles being 60°. The chaser being cut with 15 degrees clearance, these angles in the cutter will be 29° 3′ and 32° 41′ respectively, the sum of these two angles being 61° 44′. In Fig. 58 the manner of holding the chaser in a vise and the angles of the cutter are plainly shown. In the view to the left in Fig. 59 are indicated the angles to which to plane a single-point cutter held in the same manner as the chaser and provided with a clearance of 15 degrees.

Care must be taken when making chasers to be used in the manner indicated in the first case that the elevating screw of the milling machine, by means of which the chaser is raised up toward the milling cutter for each consecutive tooth cut, is correct, and that no back lash enters as a factor in the operation. As this is difficult to insure against, it is advisable to cut the threads according to the second method, as there the chances of error are smaller, it only being required that the milling cutter be ground to the exact angles wanted, and that the chaser afterward be presented to the work fully perpendicular to

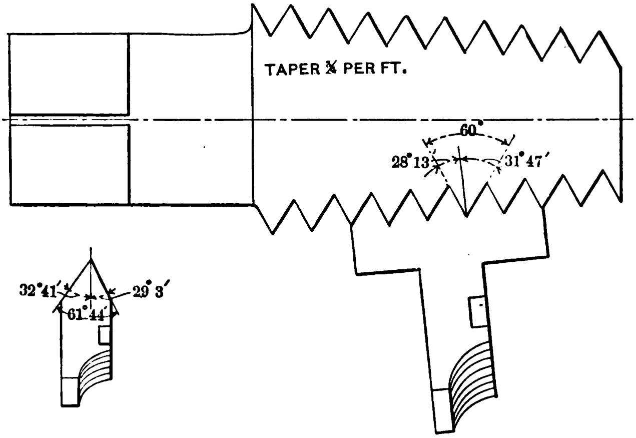

Fig. 59. Taper Tap cut with Chaser made According to the Method shown in Fig. 58

the outside surface. The angle which the face of the chaser in the latter case will make with the axis of the tap to be cut is 1° 47′. This angle, however, would be difficult to measure unless the threading tool were held in a tool-post provided with some kind of a graduated swivel. In such a case a chaser could be placed so that its face would be parallel with the axis of the tap, clamped to the tool-post swivel, and this swivel afterward moved around in an arc corresponding to 1° 47′. Ordinarily, however, if the tap blank is turned to a correct taper, the chaser can be set from the outside surface of the blank, its face being parallel to this surface in a horizontal plane through the axis of the tap.

THE INFLUENCE OF THE THREAD MILLER ON THREADING TOOLS.

With the advent of the thread milling machine the extreme accuracy of thread forms hitherto scrupulously adhered to was sacrificed for the greater commercial advantages in rapid thread-cutting. The thread milling cutter, while, as a rule, itself ground to the correct form of the thread, is, when in use, swiveled around a horizontal axis at right angles to the axis through the center of the hole of the cutter in order to conform to the angle of helix of the thread to be cut. By swiveling the cutter in this way the exact form of thread is not duplicated in the screw to be cut, inasmuch as the correct angle of the thread will not be measured in a horizontal plane through the axis of the screw as it ought to be, but in a plane at right angles to the direction of the helix of the thread. It is obvious that the inaccuracy is increased in proportion to the angle of helix. For fine pitches the inaccuracy is so small as to be insignificant for practical consideration, but as the pitches grow coarser, the same diameter being retained, the differences between the correct thread form and the one produced become enough pronounced to demand attention.

It is particularly when cutting Acme threads that this difference is great enough to cause difficulties, because of the fact that the pitches on Acme screws are usually twice as coarse as those on United States or V standard screws. The head of the thread milling machine carrying the cutter has to be tilted over so much in cutting the screw that the dimensions of the thread produced differ by measurable amounts from the standard thread, and if a screw with such a thread is placed in a nut cut with a tap having a correct thread, a very poor fit will result. The variations are, of course, even greater in the case of multiple-threaded screws, and the use of the thread milling machine for cutting such screws may be prohibitive in extreme cases unless the taps for the nuts are produced in a manner similar to the one used for the screws.

One way would be to mill the taps on screw milling machines. This is also done to a certain extent by manufacturers of these taps. But if it is desired to cut the taps in a lathe, and there are not enough taps to be made to warrant the making of thread tools to suit all the different angles of helix which may occur, a correct thread tool or single-point cutter may be used and placed in a tool-post or holder capable of swiveling adjustment, so that the tool can be tilted over to the same angle as the milling cutter would be set to in cutting the screw. Such a tool holder is shown in Fig. 60. An incidental advantage and saving of expense is gained by the use of such a holder, because the tool or single-point cutter, being set over to conform to the angle of the thread, does not need to be provided with side clearance, but can be made as if intended for cutting a circular groove or a thread of very fine pitch.

The tool holder shown is provided with a tongue *A* and a clamp *B* to hold single-point cutters of the kind manufactured by the Pratt and Whitney Company. The stem *C* of the holder is fitted to a cast-iron bracket *D*, which is clamped to the cross slide of the lathe. The screw *E* clamps the holder in position. The shoulder *F* of the holder is graduated in degrees in order to indicate the angle to which the tool is tilted. The holder, as shown, is of the very

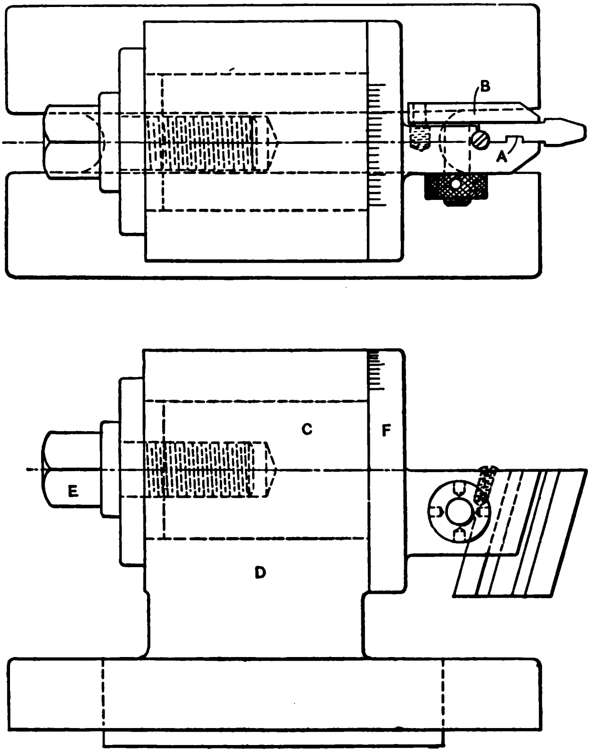

Fig. 60. Swiveling Thread-Tool Holder

simplest construction in order to merely convey the idea of the tool. With a little more elaboration in the design a still more efficient tool may result, but for temporary use the one shown will prove efficient.

SQUARE-THREAD TOOLS.

The top of the thread of square-threaded screws with coarse lead is always thicker or wider than the thread at the bottom. The space between the thread is still of the same square section. The explanation of the difference between the thickness of the thread at the top and bottom is that a thread with a steep lead is approximating a groove cut parallel with the axis of a screw as shown in Fig. 61. We see that in this extreme case, while the groove is of correct square section, the portion between the grooves, or the "thread," is far wider at the top than at the bottom. Evidently this imperfection in square threads is greater the steeper the pitch is. Where the

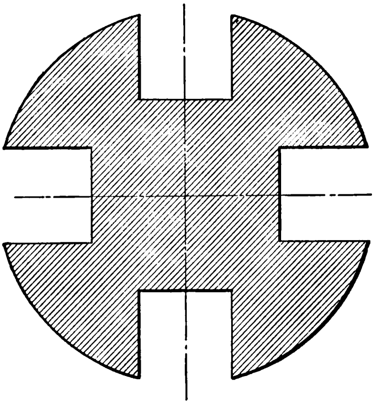

Fig. 61. Extreme Example Showing the Difference in Width at Top and Bottom of the Square Thread

lead is small compared with the diameter, the difference in width at the top and bottom of the thread is not noticeable.

It is clear that if a nut is to perfectly fit a screw having the top of the thread wider than the width at the bottom, the thread in the nut must be cut accordingly. The tool for cutting the thread in the nut must be wider at the point and its sides must be ground convex. The thread in such a case is first cut with parallel sides to the required depth with an ordinary square threading tool; then this special tool is used for widening the thread to the required shape. The exact shape of the square threading tool is obtained by drilling a hole in a piece of steel, which latter is of the same diameter as the screw, inserting a plug in this hole and threading the piece the same as the screw, so that the inserted plug is located in the middle of a thread with the grooves on each side cutting into it. If the plug is then removed, it will show the exact section of the thread in the screw and the shape which should be given to the thread tool for threading the nut.

When cutting square threads it is customary to make the screws exactly according to the theoretical standard of the square thread. The width of the point of the tool for cutting *screws* with square threads is therefore exactly one-half of the pitch, but the width of the point of the tool for cutting taps, which afterwards are used for tapping nuts, is slightly less than one-half the pitch, so that the groove in the tap becomes narrower, and the land or cutting point wider than the theoretical square thread, thereby cutting a groove in the nut which will be slightly wider than the thread in the screw, so as to provide for clearance. An inside threading tool for threading nuts evidently must be of the same width as the land on the tap would be, or in other words, slightly wider than one-half the pitch. This provides, then, the required clearance. Table XXXII gives the width of the point of the tool for all ordinary pitches from one to twenty-four threads per inch. The second column gives the width of the point for cutting taps to be used for producing square-thread nuts. The third column gives the width of the point of the tool for cutting screws, which, as we have said, equals one-half the pitch; and the fourth column gives the width of the point for inside threading tools for nuts. While the table has been carried to as fine pitches as those having twenty-four threads per inch, square-threaded screws having so fine a pitch are very seldom used. Some manufacturers of square threading tools, however, make square threading tools for pitches as fine as these, and for this reason they have been included.

TABLE XXXII.

WIDTH OF TOOL FOR CUTTING SQUARE THREADS.

No. of Threads per Inch.	Width of Point of Tool.			No. of Threads per Inch.	Width of Point of Tool.		
	For Taps.	For Screws.	For Inside Thread Tools for Nuts.		For Taps.	For Screws.	For Inside Thread Tools for Nuts.
1	0.4965	0.5000	0.5035	8	0.0615	0.0625	0.0635
1⅓	0.3715	0.3750	0.3785	9	0.0545	0.0555	0.0565
1½	0.3303	0.3333	0.3363	10	0.0490	0.0500	0.0510
1¾	0.2827	0.2857	0.2887	11	0.0444	0.0454	0.0464
2	0.2475	0.2500	0.2525	12	0.0407	0.0417	0.0427
2½	0.1975	0.2000	0.2025	13	0.0375	0.0385	0.0395
3	0.1641	0.1666	0.1691	14	0.0352	0.0357	0.0362
3½	0.1408	0.1428	0.1448	15	0.0328	0.0333	0.0338
4	0.1235	0.1250	0.1265	16	0.0307	0.0312	0.0317
4½	0.1096	0.1111	0.1126	18	0.0272	0.0277	0.0282
5	0.0985	0.1000	0.1015	20	0.0245	0.0250	0.0255
5½	0.0894	0.0909	0.0924	22	0.0222	0.0227	0.0232
6	0.0818	0.0833	0.0848	24	0.0203	0.0208	0.0213
7	0.0699	0.0714	0.0729	......	....	....	....

In Fig. 62 a diagram is presented which will facilitate the calculation of the clearance angles required by square threading tools.

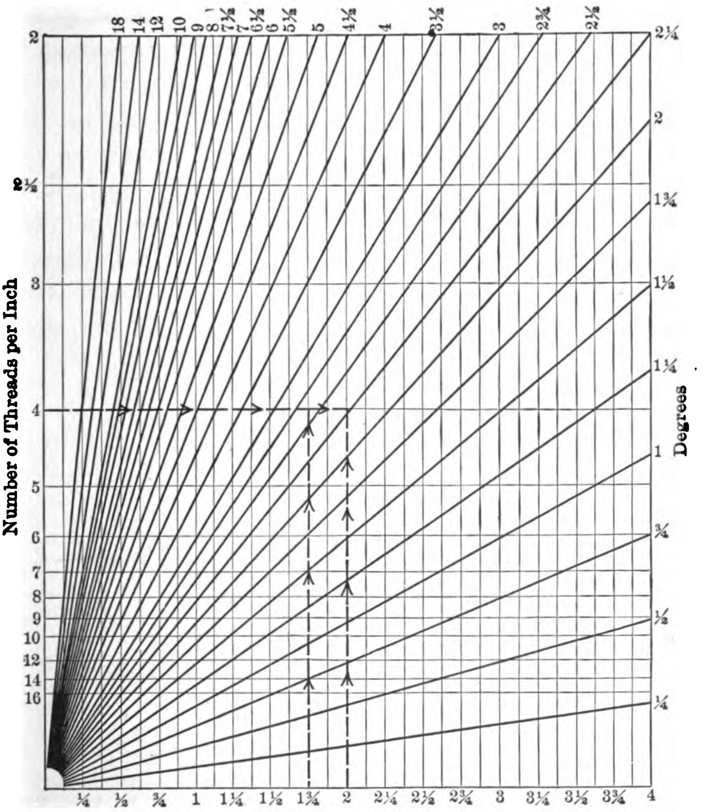

Fig. 62. Diagram of Clearance Angles for Square Thread Tools

Referring to Fig. 63, the angle on the leading side is figured to correspond to the root diameter of the screw to be cut, whereas the angle on the following side is determined by the outside diameter of the screw. The use of the diagram, Fig. 62, is best indicated by an example. Suppose it is required to find the angles for the square threading tool for a screw 2 inches in diameter, having 4 threads per inch. The root diameter equals $2 - \frac{1}{4} = 1\frac{3}{4}$ inches. To find the angle for the leading side of the tool, follow the vertical line from $1\frac{3}{4}$ inches diameter to the intersection with the horizontal line from 4 threads per inch, and from the intersection follow the nearest diagonal line, thus finding the clearance angle of the leading side of the tool equal to $2\frac{1}{2}$ degrees. To find the angle for the following side, follow the vertical line from 2 inches diameter to its intersection with the horizontal line from 4 threads per inch. From the intersection follow the nearest diagonal line, finding thus the clearance angle for the following side equal to $2\frac{1}{4}$ degrees. These angles are the theoretical clearance angles. For practical purposes, slightly greater clearance should be given.

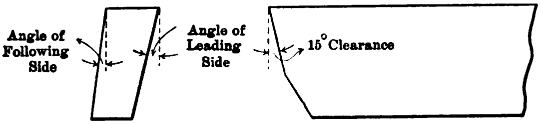

Fig. 63. Clearance Angles of Square Threading Tools

SPECIAL THREAD TOOL HOLDER.

The cut, Fig. 64, shows a spring thread tool holder the object of which is to permit the thread tool to spring away from the work if too heavy a cut is taken. This tool consists of a holder *A*, which is provided with a projection into which a hole is drilled for obtaining the spring effect, and the usual clamp and binding nut. The slot *B* is cut from the lower side of the holder into the hole, and permits the front part of the holder to recede under a too heavy cut. Proper resistance is given to the tool by the set screw *C*, which has a spring at the lower end, acting upon the front part of the holder. The part *D* is an inserted blade or key which keeps the front part of the holder from bending to one side while cutting. A great many designs of spring tool holders have been tried, and the one shown in Fig. 64 is comparatively common.

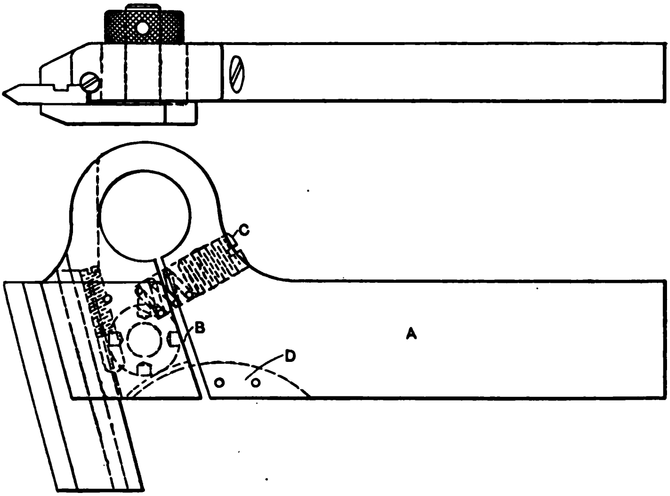

Fig. 64. Example of Spring Thread Tool Holder

The difficulty with holders of this kind is that it is almost impossible to adjust the screw for each particular pitch to be threaded so that the spring will have proper tension. It is evident that in cutting a coarse thread there is no need of the tool being as sensitive as when cutting a very fine thread, but there is no means for judging when in each particular case the proper springing action has been attained. Another objection to the design shown is that it prevents a full and clear view of the thread being cut, the projecting part extending partly above the work.

Of all spring thread tool holders hitherto designed, however, this one is about as good as any. A spring tool holder for threading tools which will overcome the objections mentioned is greatly in demand, and many attempts have been made to solve the problem, but none have been entirely successful.

DEFINITIONS OF DIFFERENT KINDS OF TAPS.

Before entering into a detailed discussion of the requirements and qualifications of taps, we will here briefly review the uses of various kinds of taps and define the names for different classes commonly used. In some cases there are doubts as to the proper name for a certain tap, and some confusion exists for instance as to the difference between a tapper tap and a machine tap. Persons not very familiar with the nomenclature of toolmaking would also easily confuse such names as screw machine tap, machine screw tap, and machine tap. In order to avoid any misunderstandings throughout this treatise we will settle definitely upon the meaning of the terms used. The same names as are used by leading tap-makers and manufacturers of small tools will be adhered to.

Hand taps, as the name implies, are taps used for tapping holes by hand. All taps used in this manner, however, are not termed hand taps, the name as commonly used referring only to straight taps used by hand. In fact, not even all taps which would come within this description are properly termed hand taps. The *machine screw tap* is nothing but a hand tap, but is not ordinarily termed so, inasmuch as all taps used for tapping holes for standard machine screws are classified as machine screw taps.

Tapper taps and *machine taps* are both used for tapping nuts in special nut-tapping machines. There is, however, a distinct difference between these two kinds of taps, although the names are often confused. The tapper tap is the original and older form used for machine nut tapping, and is simpler in its construction, consisting simply of a long chamfered and a straight portion, and usually relieved only on the top of the thread of the chamfered part. The construction of the machine tap is more complex, and will be described in detail later. The latter tap is capable of greater endurance, and is used preferably in tough material and when good cutting qualities are necessary.

Screw machine taps, as the name implies, are used for tapping in the screw machine. They are provided with shanks fitting either the turret holes of the machine or bushings inserted in these holes. As these taps ordinarily cut threads down to the bottom of a hole they are provided with very short chamfer.

Pulley taps are used for tapping holes which cannot be reached by ordinary hand taps, as for instance the set-screw or oil-cup holes in the hub of a pulley which can be reached only through a hole drilled in the pulley rim. The pulley tap, practically, is nothing but a hand tap with a very long shank.

Die taps are used for cutting threads in dies. They are provided with a very long chamfer, and, while used by hand, resemble in their construction the machine tap.

Hob taps are used for sizing dies. Because of their construction they cannot be used for actual thread-cutting, but can only take a slight finishing chip. A special form is the *Sellers hob*, which is used with a special guiding arrangement and is provided with a long guide at the end of the thread. The commonly used hob tap, or the short-shank hob tap, is in all particulars similar to an ordinary hand tap, except in regard to fluting.

Taper taps, as properly understood, are any taps which have the diameter of the part of the thread nearest the shank larger than the diameter of the point, the intermediate portion being formed by a gradual taper from the point to the end of the thread at the shank. It is necessary to note this proper meaning of the expression "taper tap" because of the fact that the first tap in a set of hand taps is commonly, but not properly, referred to as a taper tap. As this expression is used to denote two widely different things, and as its common usage precludes any possible change, we will in the following pages distinctly state which of the two meanings is referred to in any particular case. The most common of all taper taps is the *pipe tap,* which is used for tapping holes for standard pipe sizes. There is also a particular form of pipe tap termed the *straight pipe tap,* which, as the name implies, is straight. This latter tap, in fact, is nothing but a hand tap, the name merely indicating the standard sizes in regards to diameter and pitch conforming to which this tap is made.

Other less common forms of taper taps, which, however, are largely used in boiler and locomotive work, are *mud* or *wash-out taps,* sometimes termed *arch pipe taps, taper boiler taps,* and *patch-bolt taps.*

Pipe hobs are used for sizing pipe dies. They are longer than ordinary pipe taps and fluted in a different manner.

Stay-bolt taps are used in locomotive boiler work. Their action is that of a hand tap, but they are usually provided with a reamer portion preceding the threaded part. A special form of stay-bolt taps is embodied in the *spindle stay-bolt tap,* which revolves on a central spindle provided with a taper guide on the front end.

Straight boiler taps are used in boiler work. They differ in construction somewhat from the taper boiler tap, and are provided with a straight portion, which in fact puts them in the same class as ordinary hand taps.

A number of taps for special purposes have been named after the persons with whom they originated, or after the devices with which they are used. They embody, however, no principles of construction differing from any of those mentioned, in so far as the tap part is concerned. Inserted cutter taps may belong to any of the classes mentioned before, and are in a class by themselves only because of not being solid but having the cutting teeth on blades which are inserted and held in a body in a suitable manner.

CHAPTER IV.

HAND TAPS.

Of all taps, the ones most commonly used are hand taps. While there is a great deal of difference of opinion in regard to the proper way in which to make most machinists' tools, hand taps have been made so long and in such quantities as to have nearly settled all disputes regarding their necessary qualifications. There is only one point on which opinions differ, and this will be referred to later. Even on this point it is probably not so much a difference of opinion as a difference in common usage.

Hand Taps Made in Sets.

Hand taps are, as a rule, made in sets of three, the taps being termed taper, plug, and bottoming taps respectively. When using all three for tapping a hole they are used in the order named. A set of three taps is shown in Fig. 65. As indicated in the cut, the point of the taper tap is turned down to the diameter at the bottom of the thread for a length of about three or four threads. This turned-down portion acts as a guide and aids in securing a straight tapped hole. From the upper end of this guide the thread is chamfered until it reaches the full diameter of the tap. The length of this chamfered portion should be from six to seven threads. The remaining part of the threaded portion of the tap is turned straight or parallel. The plug tap is chamfered at the point for a length corresponding to about three threads. The remaining portion of the thread of this tap is then turned parallel. The bottoming tap is made practically in the same way as the plug tap, with the exception that only about one thread is chamfered at the point of this tap. It is understood that the diameter of the straight or parallel portion of the thread of all the taps in the set is the same.

The question of the principle according to which hand taps should be made in sets is the point about which there may be some difference of opinions. It is evident that from a critical point of view this way of making taps intended to be used in sets cannot be considered correct, inasmuch as the work to be done by the taps will be very unevenly distributed on account of the fact that all the taps in the set have the same diameter. The chamfered portion of the first or taper tap will have the bulk of the work to do, while the two following taps practically have no work to do except in a case where a full thread is

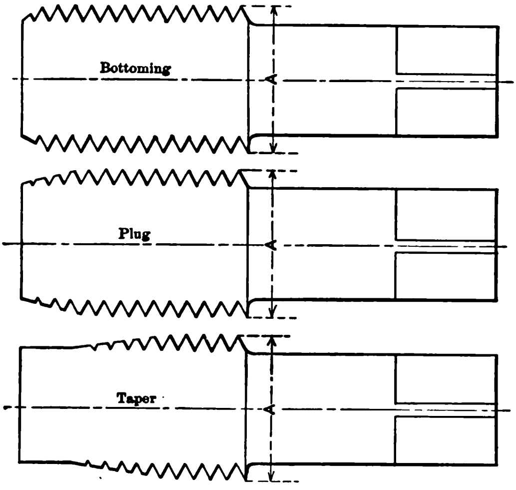

Fig. 65. Set of Three Taps made According to Prevailing Practice

required at the bottom of a hole; but even then the duties of the different taps in the set are rather unevenly distributed.

For this reason it is very obvious that taps intended for use in sets should vary in diameter, as shown in Fig. 66, so that each tap will have a reasonable amount of work to do; of course, the last tap, being a finishing tap, should have less work to do than the first two. The making of hand taps in sets, in this manner, although being both for practical and theoretical reasons the only correct and the best way, does not seem to have met with the favor of the tap manufacturers, there being only one leading firm (the Pratt and Whitney Company) which manufactures hand taps made in this manner.

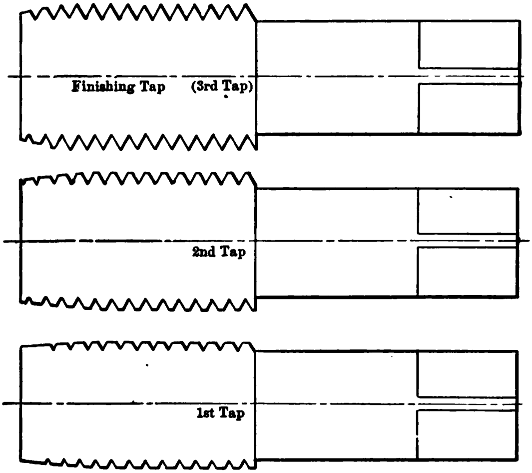

Fig. 66. Set of Three Taps made with Gradually Increasing Diameters

Objection to Making Hand Taps in Sets. — The principal objection to making hand taps in sets as described above, and the probable cause for their slow introduction, must be that when using taps of such description the whole set always has to be used, whereas for a short hole to be tapped clear through a piece the taper tap alone will be found sufficient, if the straight portion of the tap is up to the full diameter; and in fact all three taps, when all made with the same diameter, are seldom used except when a full thread is wanted at the bottom of a hole. However, the cutting of the full thread tapped clear through a piece, by the taper tap in one operation, places an undue stress on this tap, and will not give as smooth a thread as if the hole had been run through by a set of taps of varying diameter, each of which cuts a fair amount of the thread.

Proportioning the Work to be Done by Each Tap in a Set. — The question of making the taps in a set with different diameters is of so great importance, and will probably be given more or less attention by tap-makers in the future, that it may be well worth to analyze the problem of just how much each succeeding tap should be larger in diameter than the preceding one. We must also remark at the outset that it is not enough that there is a variation in the diameters of the taps as measured on the top of the thread; there must also be a difference in the diameters measured in the angle of the thread. The two diagrams Figs. 67 and 68 show by means of different cross-sectioning the amounts of metal removed by the different taps in a set made as outlined above. The first diagram represents the cutting of a V thread, the second a United States standard thread. The differences in the outside diameters of the taps as well as in the angle diameters are clearly indicated.

We will now proceed to express these differences by formulas, and it is, of course, evident that the values will vary with the pitch of the thread. In the formulas given in the following the proportions between the amount of metal removed by each succeeding tap are so adjusted that the first tap cuts the greater part of the thread, the second tap a somewhat smaller amount, and, finally, the last tap in the set a comparatively slight proportion of the total thread. If we first consider the V thread, and take the pitch of the thread as the working factor, the distances from the top of the full thread to the top of the thread of the plug and taper taps respectively will be found according to the following formulas:

$$a = 0.15 \times \text{pitch.}$$
$$b = 0.47 \times \text{pitch.}$$

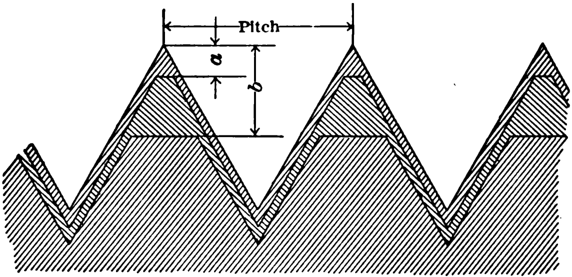

Fig. 67. **Section Showing Relative Amount Removed by each Tap in a Set of Three Taps, Sharp V Thread**

The relative values of a and b are shown in the diagram of the sharp V thread, Fig. 67. Considering the differences in the angle diameter of the thread, these ought to be the amounts c and d, respectively, smaller than the correct angle diameter, for the plug and taper taps:

For plug tap $c = 0.09 \times$ pitch,
For taper tap $d = 0.17 \times$ pitch.

For United States standard thread the formulas would be

$$e = 0.05 \times \text{pitch and}$$
$$f = 0.33 \times \text{pitch}$$

for the differences on the top of the thread (for the relative values of e and f see diagram, Fig. 68).

The angle diameter perhaps should, strictly considered, vary differently from that of a sharp V thread, but the variation would be so slight that it can be eliminated in all practical considerations, and the variations between the correct angle diameter and those of the plug and taper tap can be made the same as for sharp V thread, viz.,

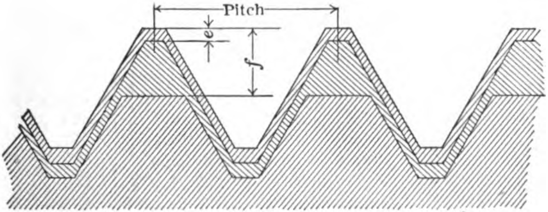

Fig. 68. Section Showing Relative Amount Removed by each Tap in a Set of Three Taps, U. S. Standard Thread

0.09 × pitch for the plug tap and 0.17 × pitch for the taper tap.

For convenience, and in order to save the trouble of figuring the values from the formulas in each individual case, Table XXXIII, showing the amounts found from the formulas, is given herewith. The quantities a, b, e, and f are given as $2a$, $2b$, $2e$, and $2f$, thus giving the differences for the diameter (a, b, e, and f being the difference on one side only). Only as many decimals are given as are necessary for all practical purposes. The differences in the angle diameters, although alike for United

States standard thread and sharp V thread, have been repeated in both columns in order to secure uniformity.

TABLE XXXIII.

DIMENSIONS FOR MAKING HAND TAPS IN SETS.

No. of Thread per Inch.	Pitch.	U. S. Standard Thread.				Standard Sharp V Thread.			
		2 f.	*2 e.*	*d.*	*c.*	*2 b.*	*2 a.*	*d.*	*c.*
3	0.3333	0.222	0.033	0.056	0.030	0.312	0.100	0.056	0.030
3½	0.2857	0.190	0.029	0.048	0.026	0.269	0.086	0.048	0.026
4	0.2500	0.167	0.025	0.042	0.023	0.235	0.075	0.042	0.023
4½	0.2222	0.148	0.022	0.037	0.020	0.209	0.067	0.037	0.020
5	0.2000	0.133	0.020	0.033	0.018	0.188	0.060	0.033	0.018
5½	0.1818	0.121	0.018	0.030	0.016	0.171	0.055	0.030	0.016
6	0.1667	0.111	0.017	0.028	0.015	0.157	0.050	0.028	0.015
7	0.1429	0.095	0.014	0.024	0.013	0.134	0.043	0.024	0.013
8	0.1250	0.083	0.012	0.021	0.011	0.118	0.037	0.021	0.011
9	0.1111	0.074	0.011	0.018	0.010	0.104	0.033	0.018	0.010
10	0.1000	0.067	0.010	0.017	0.009	0.094	0.030	0.017	0.009
11	0.0909	0.061	0.009	0.015	0.008	0.085	0.027	0.015	0.008
12	0.0833	0.056	0.008	0.014	0.008	0.078	0.025	0.014	0.008
13	0.0769	0.051	0.008	0.013	0.007	0.072	0.023	0.013	0.007
14	0.0714	0.048	0.007	0.012	0.006	0.067	0.021	0.012	0.006
16	0.0625	0.042	0.006	0.010	0.006	0.059	0.019	0.010	0.006
18	0.0556	0.037	0.0055	0.009	0.005	0.052	0.017	0.009	0.005
20	0.0500	0.033	0.005	0.008	0.0045	0.047	0.015	0.008	0.0045
22	0.0455	0.030	0.0045	0.0075	0.004	0.043	0.014	0.0075	0.004
24	0.0417	0.028	0.004	0.007	0.004	0.039	0.0125	0.007	0.004
26	0.0385	0.026	0.004	0.0065	0.0035	0.036	0.0115	0.0065	0.0035
28	0.0357	0.024	0.0035	0.006	0.003	0.034	0.0105	0.006	0.003
30	0.0333	0.022	0.0035	0.0055	0.003	0.031	0.010	0.0055	0.003
32	0.0312	0.021	0.003	0.005	0.003	0.029	0.0095	0.005	0.003
34	0.0294	0.020	0.003	0.005	0.0025	0.028	0.009	0.005	0.0025
36	0.0278	0.019	0.003	0.0045	0.0025	0.026	0.0085	0.0045	0.0025
38	0.0263	0.018	0.0025	0.0045	0.0025	0.025	0.008	0.0045	0.0025
40	0.0250	0.017	0.0025	0.004	0.0025	0.0235	0.0075	0.004	0.0025
42	0.0238	0.016	0.0025	0.004	0.002	0.0225	0.007	0.004	0.002
44	0.0227	0.015	0.0025	0.004	0.002	0.0215	0.0065	0.004	0.002
46	0.0217	0.0145	0.002	0.0035	0.002	0.0205	0.0065	0.0035	0.002
48	0.0208	0.014	0.002	0.0035	0.002	0.0195	0.006	0.0035	0.002
50	0.0200	0.0135	0.002	0.0035	0.002	0.019	0.006	0.0035	0.002
52	0.0192	0.013	0.002	0.003	0.0015	0.018	0.006	0.003	0.0015
54	0.0185	0.0125	0.002	0.003	0.0015	0.0175	0.0055	0.003	0.0015
56	0.0179	0.012	0.002	0.003	0.0015	0.017	0.0055	0.003	0.0015
58	0.0172	0.0115	0.0015	0.003	0.0015	0.016	0.005	0.003	0.0015
60	0.0167	0.011	0.0015	0.003	0.0015	0.0155	0.005	0.003	0.0015

In regard to the chamfer at the point of the thread it is good practice to chamfer 6 threads on the first, 3 on the second, and 1 on the last tap in a set when made as outlined above.

What has been said before in regard to making hand taps in sets has special reference to taps with United States standard thread and sharp V thread. It has also bearing upon taps with International or French standard thread. No table, however, can be considered necessary for these standards. As the shape of the threads for the latter standards is the same as for the United States standard, the values in the column under "United States Standard Thread," if selected for the pitch which comes nearest to a given pitch in millimeter, will give satisfactory working figures.

Acme Taps in Sets. — While it has not become the generally adopted custom to make the three taps in a set of hand taps with the United States or V standard thread of different diameters, so that each tap cuts a certain proportion of the metal to be removed in forming the thread, this construction becomes imperative when making taps with Acme or square threads. The reason for this is that the pitch of the thread of taps with the latter class of threads is usually coarser for corresponding diameters, and the same size tap is therefore required to remove more metal in this case than if it were provided with 60-degree threads. The shape of the Acme and square threads, with their wide flats at the top of the thread, also increases the resistance to the cut, if the full depth of the thread should be produced with one tap. For these reasons Acme and square thread taps, intended for cutting a complete thread from a nut blank, and not intended merely for finishing a thread cut in a lathe, are always made in sets, each tap in the set being smaller in diameter than the one following.

While for Acme and square thread taps three taps in a set are undoubtedly the most common, these taps may be made with only two taps in a set for very fine pitches, and with as many as five taps in a set for very coarse pitches. The last tap in these sets is not made on the principle of a bottoming tap, as Acme and square threads are seldom used except in nuts which are threaded straight through. There is, in fact, a more liberal chamfer on all the taps in the set than is common with ordinary taps.

In giving formulas and definite data we will first turn our attention to the Acme tap. On account of the clearance required on the top of an Acme thread between the screw and the nut, the actual diameter of the last or finishing tap in the set must be larger than the standard or nominal diameter of the screw or nut. If

A = actual diameter of finishing tap and
B = root diameter of the thread,

the relations of these values to the nominal or standard diameter of the tap are

$$A = \text{nominal diameter} + 0.020 \text{ inch},$$

$$B = \text{nominal diameter} - \left(\frac{1}{\text{number of threads per inch}} + 0.020 \text{ inch}\right).$$

Table XXXIV gives the proportions for the diameters of Acme taps in sets of two up to and including five. Referring to the table, C = the actual diameter of the succeeding taps in the sets, D = the diameter at the point of the thread, and E = the length of the straight or parallel portion of the thread in relation to the whole length of the thread L. In order to simplify the expressions in the formulas the difference between the actual diameter of the finishing tap A and the root diameter B is termed G.

TABLE XXXIV.

ACME THREAD TAPS IN SETS.

No. of Taps in Set.	Tap.	C	D	E
2	1st	$B + 0.65\,G$	$B + 0.010$ inch	$\frac{L}{6}$
	2nd	A	C on 1st tap $-$ 0.005 inch	$\frac{L}{3}$
3	1st	$B + 0.45\,G$	$B + 0.010$ inch	$\frac{L}{6}$
	2nd	$B + 0.8\,G$	C on 1st tap $-$ 0.005 inch	$\frac{L}{4}$
	3rd	A	C on 2nd tap $-$ 0.005 inch	$\frac{L}{3}$
4	1st	$B + 0.4\,G$	$B + 0.010$ inch	$\frac{L}{8}$
	2nd	$B + 0.7\,G$	C on 1st tap $-$ 0.005 inch	$\frac{L}{6}$
	3rd	$B + 0.9\,G$	C on 2nd tap $-$ 0.005 inch	$\frac{L}{4}$
	4th	A	C on 3rd tap $-$ 0.005 inch	$\frac{L}{3}$
5	1st	$B + 0.37\,G$	$B + 0.010$ inch	$\frac{L}{8}$
	2nd	$B + 0.63\,G$	C on 1st tap $-$ 0.005 inch	$\frac{L}{6}$
	3rd	$B + 0.82\,G$	C on 2nd tap $-$ 0.005 inch	$\frac{L}{5}$
	4th	$B + 0.94\,G$	C on 3rd tap $-$ 0.005 inch	$\frac{L}{4}$
	5th	A	C on 4th tap $-$ 0.005 inch	$\frac{L}{3}$

Square-Thread Taps in Sets. — If we now turn to the square-thread tap, and let the letters represent the same dimensions as in the case of Acme taps, we will find our dimensions in Table XXXV. We must, however, take into account that there is no clearance allowed on the top of the thread, and that the depth of a square thread equals one-half of the pitch. Therefore

A = the nominal diameter of the tap and
B = the nominal diameter − pitch of thread.

TABLE XXXV.

SQUARE-THREAD TAPS IN SETS.

No. of Taps in Set.	Tap.	C	D	E
2	1st	$B + 0.67\,G$	$B - 0.005$ inch	$\frac{L}{6}$
	2nd	A	C on 1st tap − 0.005 inch	$\frac{L}{3}$
3	1st	$B + 0.41\,G$	$B - 0.005$ inch	$\frac{L}{6}$
	2nd	$B + 0.8\,G$	C on 1st tap − 0.005 inch	$\frac{L}{4}$
	3rd	A	C on 2nd tap − 0.005 inch	$\frac{L}{3}$
4	1st	$B + 0.32\,G$	$B - 0.005$ inch	$\frac{L}{8}$
	2nd	$B + 0.62\,G$	C on 1st tap − 0.005 inch	$\frac{L}{6}$
	3rd	$B + 0.90\,G$	C on 2nd tap − 0.005 inch	$\frac{L}{4}$
	4th	A	C on 3rd tap − 0.005 inch	$\frac{L}{3}$
5	1st	$B + 0.26\,G$	$B - 0.005$ inch	$\frac{L}{8}$
	2nd	$B + 0.50\,G$	C on 1st tap − 0.005 inch	$\frac{L}{6}$
	3rd	$B + 0.72\,G$	C on 2nd tap − 0.005 inch	$\frac{L}{5}$
	4th	$B + 0.92\,G$	C on 3rd tap − 0.005 inch	$\frac{L}{4}$
	5th	A	C on 4th tap − 0.005 inch	$\frac{L}{3}$

By comparing the tables given for the Acme and the square thread taps it will be noticed that the differences occur in the columns for the values of *C* and *D*, for the latter, however, only in the case of the first tap in each set. That the values for *C* should differ is evident, inasmuch as there is a decided difference in the cutting action of an Acme and a square thread tap. In a set of square-thread taps each tap is a finishing tap in itself, because the lands of each tap are alike. In a set of Acme taps each tap may be considered as a finishing tap for the preceding one. The last tap in each set has less work to do in order to assure a smooth bottom of the thread in the nut tapped.

In regard to the dimension *D*, this is larger than the root diameter of the tap in the case of an Acme tap, because the nut is supposed to be bored out with a clearance of 0.020 inch, as explained when reference was made to various forms of threads. This, then, still permits the tap to enter into the nut. In the case of a square-thread tap there is no standard as to how much the hole in the nut should clear the root of the thread, and therefore the point of the tap is made below the root diameter on the first tap in each set to insure that the tap can enter the nut. In order to further facilitate the entering of the tap in the nut, there should be, besides the long chamfer referred to above, a slight chamfer at the point of the thread, by means of which the tap will easily find its way into the nut to be tapped. This chamfer should not be lacking on any of the taps in the set.

Acme and Square Thread Taps in Sets of Three. — As was mentioned before, the most common way of making Acme and square thread taps is to make them with three taps in a set. The values necessary to obtain *C* in Tables XXXIV and XXXV have therefore been figured for a set of three taps for the most common pitches and are given in Table XXXVI. It must be understood that the formulas given and the tables figured from them possess a certain degree of flexibility, inasmuch as the making up of the formulas necessarily required some assumed standard to be selected as embodying the best practice. Certain conditions may require deviations from the rules given. While, however, the formulas which are given may not suit all possible conditions, they are made up to suit ordinary needs, and they are particularly valuable in suggesting the possibility of systematizing the making of tools too often given up to "guesswork."

TABLE XXXVI.

TABLE FOR MAKING ACME AND SQUARE THREAD TAPS IN SETS OF THREE.

Number of Threads per Inch.	Acme Thread.		Square Thread.	
	Amount in Inches to add to Root Diameter of Tap to obtain Diameter of Straight Part of Thread of		Amount in Inches to add to Root Diameter of Tap to obtain Diameter of Straight Part of Thread of	
	1st Tap.	2nd Tap.	1st Tap.	2nd Tap.
1	0.468	0.832	0.410	0.800
1½	0.318	0.566	0.273	0.533
2	0.243	0.432	0.205	0.400
2½	0.198	0.352	0.164	0.320
3	0.168	0.298	0.137	0.267
3½	0.147	0.261	0.117	0.229
4	0.130	0.232	0.102	0.200
4½	0.118	0.210	0.091	0.178
5	0.108	0.192	0. 82	0.160
5½	0.100	0.178	0.075	0.146
6	0.093	0.166	0.068	0.133
7	0.082	0.146	0.059	0.114
8	0.074	0.132	0.051	0.100
9	0.068	0.121	0.046	0.089
10	0.063	0.112	0.041	0.080
12	0.055	0.098	0.034	0.067

In using Table XXXVI it is necessary first to find the root diameter by subtracting the double depth of the thread, plus the clearance in the case of Acme thread, from the nominal diameter of the tap, and then add the amount stated opposite the pitch for the respective taps in the set.

It is difficult to draw a distinct line between hand taps and machine taps when these are provided with Acme or square threads, for while these taps are as a rule used as hand taps, the construction is that of a machine tap. In general practice, however, these taps are generally classified as hand taps.

General Construction of Acme and Square Thread Taps. — Before we leave the Acme and square thread taps to return to the regular hand taps, we will point out some of the peculiarities in their construction. The first tap in a set should be turned to a taper in the bottom of the thread for a distance of about one-quarter of the whole length of the threaded part as indicated in Fig. 69. The diameter at the root of the thread at the point of the first tap should thus be less than the standard root diameter. If the taper selected is such that the root diameter will be about one-thirty-second inch smaller at the point than the root diameter proper of the tap, that will be found to greatly increase the ease with which the tap can be started in the nut. The first tap in the set should also be provided with a groove or a secondary thread on top of the ordinary thread. This will aid in preventing the tap from reaming, instead of

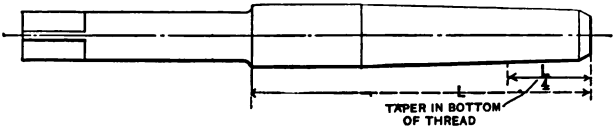

Fig. 69. General Appearance of Acme and Square Thread Taps

actually cutting a thread in the nut. This secondary thread may continue the full length of the chamfered portion of the first tap. The first tap should also preferably be provided with a short pilot as shown in Fig. 70 to guide the tap straight into the nut. When the pitch is very coarse as compared with the diameter of the tap, or when the number of taps in a set is small in proportion to the work they are to perform, the first tap in the set should be provided with spiral flutes, forming a right angle with the angle of direction of the thread. In other words, the spiral of the flutes should be left-hand for a right-hand tap, and *vice versa*. This will greatly increase the cutting qualities of the tap. In fact, it evidently would increase the efficiency of all taps to flute them in this manner, but whenever it is not imperative it is avoided on account of the increased expense and difficulty.

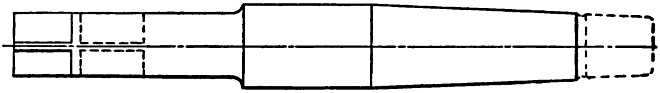

Fig. 70. Difference between First and Subsequent Taps in a Set of Acme or Square Thread Taps

When the first tap in a set is provided with a pilot, the diameter of this should be made a trifle smaller than the hole in the nut to be tapped (from 0.002 to 0.005 inch smaller). The length of the pilot should be about equal to the diameter of the tap, or, at least, not shorter than 0.75 times the diameter. The length of the pilot should project from the regular length of the thread of the taps in the set, but in order to make the total length of all the taps in the set the same, the length of the pilot should be subtracted from the length of the shank in the first tap. This is indicated by the dotted lines in the cut, Fig. 70, where the full lines show the second and third taps in a set, and the dotted the pilot and the modification in the shank of the first tap.

At the end of this chapter we shall return to these taps when giving formulas and length dimensions for all kinds of hand taps. We shall now again take up ordinary hand taps with United States, sharp V, or Whitworth form of thread. What will be said in regard to the fluting of these taps applies of course to Acme and square thread taps as well. The relief of the latter taps will be specially mentioned later.

Cutting Taps with Dies.

While it is rather common to cut the threads on taps with dies instead of cutting the thread in a lathe, it is a practice which can hardly be recommended. Any inaccuracy in the lead of the thread of the die will be duplicated in the tap, and still further augmented by the change in lead in the tap due to hardening. Sometimes, when the threads on small taps are cut with dies in screw machines, it is found that the taps have a "stretched" thread, or in other words, that the lead of the thread is longer than the standard lead. On examination the die may be found to be properly made, but further investigation may show that the heavy turret slide of the screw machine was dragged along with the die, and this has caused the thread to stretch, making the lead long. For this reason it is not advisable to cut the thread of taps which are required to have the highest possible degree of accuracy in a screw machine. It is particularly bad practice in the case of taps with a long threaded portion or taps used for threading long holes, as the inaccuracies in lead will be so much the more pronounced.

The opinion that taps stretch or become long in the lead when cut by dies in screw machines is one that is not universally accepted, and it must be admitted that the reason given for this occurrence does not seem entirely plausible. Whatever be the cause, however, the fact that taps cut in screw machines are liable to be inaccurate remains undisputed.

It is true that it is the practice with some firms manufacturing taps to cut the thread with dies in a screw machine, but in the case of *manufacturing* some factors enter which make this permissible. In the first place, the difference in price when threading in a screw machine or cutting the thread in a lathe is so great that a number of taps can be thrown out at the final inspection if their inaccuracy in lead is greater than the limits of error permitted, and a saving may still be the result of the method employed. It must be understood, however, that such a procedure is applicable only to small taps, where the loss of material is not very significant should a tap not pass the inspector, but this process should not be applied to taps where great accuracy is especially desired. In such cases nothing can compare with a thread cut in a lathe provided with a lead screw which itself has been properly tested as to its own accuracy. For ordinary machine screw taps, however, in manufacturing, the screw machine may answer the purpose and prove economical.

REQUIREMENTS FOR CORRECTLY THREADED TAPS.

In correctly threading a tap, there are six distinct points to be taken into consideration. The tap must be provided with the correct diameter in the angle of the thread, a correct outside diameter, correct lead, correct angle between the sides of the thread, correct relation of this angle to the axis of the tap, and finally, correct flats or radii at the top and bottom of the threads, as required by the standard thread form. The angle diameter, for instance, may be correct while the outside diameter would be a trifle large or small, depending upon whether the flat or radius at the top of the thread were either too small or too large. The lead, of course, may be incorrect while the other factors are practically correct. The angle of the thread may be larger or smaller than the standard angle, and if the lead, the outside diameter, and the angle diameter were still approximately correct, the tap would produce a very poorly fitting thread. The angle between the sides of the thread may be correct in itself, but the thread-cutting tool may have been presented to the work at an oblique angle, thus producing a thread that would not be symmetrical about a line through the center of the thread at right angles to the axis of the tap. It is evident that all these requirements in regard to threading must be filled in order to make a perfect tap.

In manufacturing, where tools and holders specially made for the purpose are used in threading taps, there is little danger of inaccurate or unsymmetrical angles of the thread. It is therefore the practice simply to inspect the angle diameter and the lead of the tap. If these two prove correct within the prescribed limits, and if the outside diameter of the tap blank was inspected before threading, there is little danger of any serious inaccuracies in respect to the other details of the thread. It must, however, be understood that the threading tools and the alignment of the threading lathes must be subject to inspection at certain intervals, if the chances of error are to be guarded against as much as possible.

Fluting.

The flutes of a tap serve two purposes. They provide for cutting edges for the threads and form channels for the carrying off of the chips. The form of the flute is very important, as it determines the cutting qualities of the tap as well as the ease with which the chips will be able to pass away from the cutting points. The main qualities looked for in a tap are strength and ease of working, provided the tap is otherwise correct. In order to obtain strength a shallow flute with no sharp corners is the first requirement. An easy-working tap, again, requires a considerable amount of chip room, and consequently a comparatively deep flute. The correct flute therefore is a compromise between a flute which will give the greatest amount of chip room and the greatest strength to the tap. Besides, the flute must be of a shape easily produced, so as to limit the cost as far as consistent with good results, and must carry away the chips from the cutting edges in a manner offering the least resistance. The present practice is to provide hand taps with deep straight-sided flutes having a small round in the bottom, as shown to the left in Fig. 71. This method, while it provides an abundance of chip room, is accompanied by some very grave disadvantages. The tap will crack more easily in hardening, it will not carry away the chips from the cutting edges as readily, and is not as strong as a tap fluted in the manner shown in the section

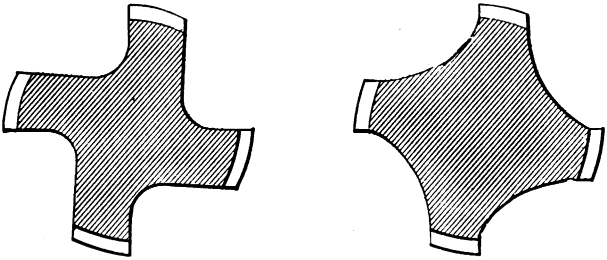

Fig. 71. Common Forms of Tap Flutes

to the right in Fig. 71. The making and maintenance of the cutters for producing this latter flute, however, are more expensive, and as the present practice of fluting is becoming fairly universal it is evident that the objections, while of a serious nature, do not outweigh the advantages gained. The radius at the bottom of the flute ought, however, not to be less than one-quarter of the diameter of the tap. Some persons well familiar with this kind of work claim that a radius of one-eighth of the diameter of the tap would serve the purpose equally well, besides giving a larger space for chips. It has been proven beyond doubt, however, that this slight difference in the radius at the bottom of the flute influences the endurance qualities of the tap very materially.

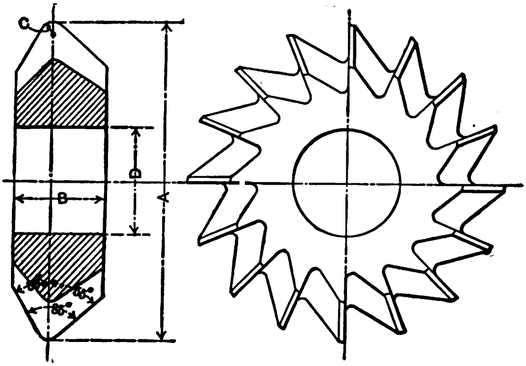

Fig. 72. Tap Fluting Cutter

Fluting Cutters. — The cutter used for cutting the straight-sided flute is shown in Fig. 72. The included angle between the sides is 85 degrees, 55 degrees on one side and 30 degrees on the other. The thickness of the cutter should be approximately equal to $\frac{7}{16} D + \frac{5}{16}$ inch if D equals the diameter of the tap. The radius, as mentioned before, ought to be equal to $\frac{D}{4}$, but should not exceed $\frac{7}{16}$ inch. The diameter of the cutter depends, of course, not only upon the diameter of the tap to be fluted but also upon the size of the hole in the cutter for the milling-machine arbor. If we assume that we use a three-quarter-inch hole in the cutters for the smaller diameters of taps, say up to and including three-quarter-inch, and one-inch hole in cutters for large-diameter taps, we can make

$$\text{Diameter of cutter} = \frac{D}{2} + 2 \text{ inches},$$

in which formula D, as before, equals the diameter of the tap to be fluted.

TABLE XXXVII.

DIMENSIONS OF FLUTING CUTTERS FOR HAND TAPS.

(See Fig. 72 for form of cutter.)

Diameter of Tap.	Diameter of Cutter.	Thickness of Cutter.	Radius.	Diameter of Hole in Cutter.
	A	B	C	D
$\frac{1}{4}$	2	$\frac{3}{8}$	$\frac{1}{16}$	$\frac{3}{4}$
$\frac{3}{8}$	$2\frac{1}{4}$	$\frac{1}{2}$	$\frac{3}{32}$	$\frac{3}{4}$
$\frac{1}{2}$	$2\frac{1}{4}$	$\frac{1}{2}$	$\frac{1}{8}$	$\frac{3}{4}$
$\frac{5}{8}$	$2\frac{1}{4}$	$\frac{5}{8}$	$\frac{5}{32}$	$\frac{3}{4}$
$\frac{3}{4}$	$2\frac{1}{4}$	$\frac{5}{8}$	$\frac{3}{16}$	$\frac{3}{4}$
$\frac{7}{8}$	$2\frac{1}{2}$	$\frac{3}{4}$	$\frac{7}{32}$	1
1	$2\frac{1}{2}$	$\frac{3}{4}$	$\frac{1}{4}$	1
$1\frac{1}{4}$	$2\frac{1}{2}$	$\frac{7}{8}$	$\frac{5}{16}$	1
$1\frac{1}{2}$	$2\frac{3}{4}$	1	$\frac{3}{8}$	1
$1\frac{3}{4}$	$2\frac{3}{4}$	$1\frac{1}{8}$	$\frac{7}{16}$	1
2	3	$1\frac{1}{8}$	$\frac{7}{16}$	1
$2\frac{1}{4}$	3	$1\frac{1}{4}$	$\frac{7}{16}$	1
$2\frac{1}{2}$	$3\frac{1}{4}$	$1\frac{3}{8}$	$\frac{7}{16}$	1
$2\frac{3}{4}$	$3\frac{1}{4}$	$1\frac{1}{2}$	$\frac{7}{16}$	1
3	$3\frac{1}{2}$	$1\frac{5}{8}$	$\frac{7}{16}$	1
$3\frac{1}{2}$	$3\frac{3}{4}$	$1\frac{7}{8}$	$\frac{7}{16}$	1
4	4	2	$\frac{7}{16}$	1

Table XXXVII is figured from the formulas given. The figures given in the table are, however, practical working figures and are only approximately the values figured from the formulas whenever these values give dimensions unnecessarily fine and in too small fractions. Of course the nearest quarter of an inch is near enough for the dimension in regard to diameter, and the nearest one-eighth inch in regard to thickness. The radius, however, must be given in finer subdivisions, as one-thirty-second or even one-sixty-fourth inch makes a considerable difference in this respect.

The cutter for the flute shown to the right in Fig. 71 is shown in Fig. 73. The curve forming the cutting edge is composed of two arcs tangent to each other with their centers at *A* and *B* respectively. The radius for the large arc should be about equal to the diameter of the tap. The radius of the small arc should be about one-sixth of the diameter. It must be plainly understood that when formulas and rules like the above are given they are intended only for guidance. It is evidently impossible to have cutters conform to these formulas for each different diameter of tap, as it would require more cutters than necessary. The formulas merely express a good average working practice.

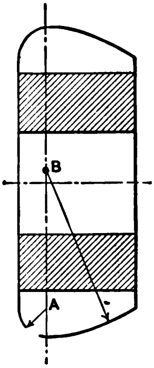

Fig. 73. Special Form of Tap Fluting Cutter

The lands of the tap when fluted with the cutter last described may be somewhat narrower than the lands in taps fluted with straight-sided flutes, inasmuch as the latter tap requires wide lands in order to make up for the loss of strength due to the deep, more sharp cornered flute.

Fluting Taps for Brass. — In the case of either flute it is the practice to make the cutting edges of the taps radial as in Fig. 71. This is, at least, the common practice in regard to taps for steel and cast iron. In regard to taps for brass there is some difference of opinion. The general practice, however, if a tap is to be used entirely for brass, is to provide a cutting edge which is slightly in advance of the radial line, or in other words, parallel to the radial line, but ahead of the center, as shown in Fig. 74. This way of cutting the flute gives a slight negative rake, and causes the tap to cut more smoothly and with less liability of chattering. The dimension a in Fig. 74 should be from one-sixteenth to one-tenth of the diameter of the tap. However, a tap with the cutting edges radial will cut brass fairly well if otherwise properly made.

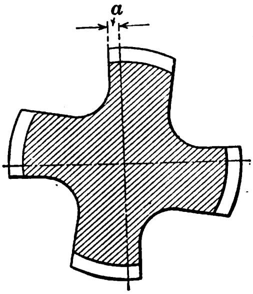

Fig. 74. Section of Tap for Brass

Number of Flutes. — Lastly, we have to consider the number of the flutes in hand taps. The formula

$$\text{Number of flutes} = \frac{11\,D}{8} + 2\tfrac{3}{4},$$

in which formula D equals the diameter of the tap, will give approximately the correct number of flutes. Figuring a table from this formula, we will find the number of flutes for various diameters as stated in Table XXXVIII.

It will be noticed that the numbers of flutes for hand taps as given in Table XXXVIII are 4, 6, and 8, the odd numbers 3, 5, and 7 not being used. The reason for this is that an even number of flutes enables one to measure the diameter of the tap in all cases with ordinary micrometers. If an odd number of flutes is used the measuring of the diameter is rather complicated and requires a gauge to which to fit the tap. Even then there will still be more or less uncertainty unless the tap is of a standard diameter.

TABLE XXXVIII.

DIAMETERS OF HAND TAPS AND CORRESPONDING NUMBER OF FLUTES.

Diameter of Tap.	Number of Flutes.	Diameter of Tap.	Number of Flutes.
$\frac{1}{4}$	4	$1\frac{3}{4}$	6
$\frac{3}{8}$	4	2	6
$\frac{1}{2}$	4	$2\frac{1}{4}$	6
$\frac{5}{8}$	4	$2\frac{1}{2}$	6
$\frac{3}{4}$	4	$2\frac{3}{4}$	6
$\frac{7}{8}$	4	3	6
1	4	$3\frac{1}{2}$	8
$1\frac{1}{4}$	4	4	8
$1\frac{1}{2}$	4	....	....

It must also be remarked, in connection with the fluting of hand taps, that the width of the lands does not depend only upon the necessary strength of the tap. As a hand tap, as a rule, receives all its guidance from the lands resting against the walls of the nut it is necessary to have the lands wide enough so that they steady the tap during the tapping operation.

In regard to the number of flutes there is, however, some difference of opinion. There are those who consider four flutes the proper number to use on all sizes of hand taps with the land about one-fourth the diameter of the tap. However, on large taps the land will be rather wide if made according to this rule, and better results will be obtained by increasing the number of flutes in accordance with the formula previously given.

Convex Fluting Cutter. — Sometimes a regular convex cutter is used for fluting taps. This is merely a way of providing a flute similar to the one shown to the right in Fig. 71, but avoiding the expense of a special cutter. In selecting half-round (convex) cutters for taps the formula below can be used for determining the proper thickness of the cutter:

$$T = \frac{8\,D}{3\,A},$$

in which formula

T = the thickness of the cutter,
D = the diameter of the tap,
A = the number of flutes.

If, for instance, we wish to flute a one-inch tap with four flutes, the thickness of a convex cutter for the purpose would be

$$\frac{8 \times 1}{3 \times 4} = \frac{8}{12} = 0.667, \text{ or } \frac{11}{16} \text{ approximately.}$$

GRINDING FLUTING CUTTERS.

In the case of formed cutters with regular milling cutter teeth it is, of course, necessary that the teeth be ground around the edges, instead of being ground only on the faces as is always the case on cutters with eccentrically relieved teeth. In Figs. 72 and 73 are shown two types of milling cutters which may be ground with devices working on the principles indicated and described below, the cutter in Fig. 72, as mentioned above, being a regular fluting cutter for taps, and the cutter in Fig. 73 a special fluting cutter.

In Fig. 75 is shown the device used for grinding a regular tap fluting cutter. The angle included between the two faces on the fluting cutter is 85 degrees, and the angle between the two faces *C* and *D* in the device for grinding the teeth of these cutters is also 85 degrees, one side making 30 and the other 55 degrees with a line at right angles to the axis of stud *A* on which the cutter is mounted while grinding. The device consists of a base plate *G* having three feet which rest on a special table on the grinding machine, shown in Fig. 76, which will be more

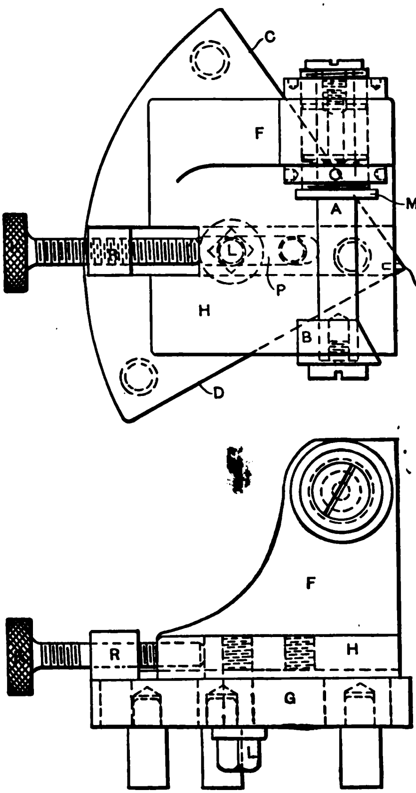

Fig. 75. Device for Grinding Tap Fluting Cutter Shown in Fig. 72

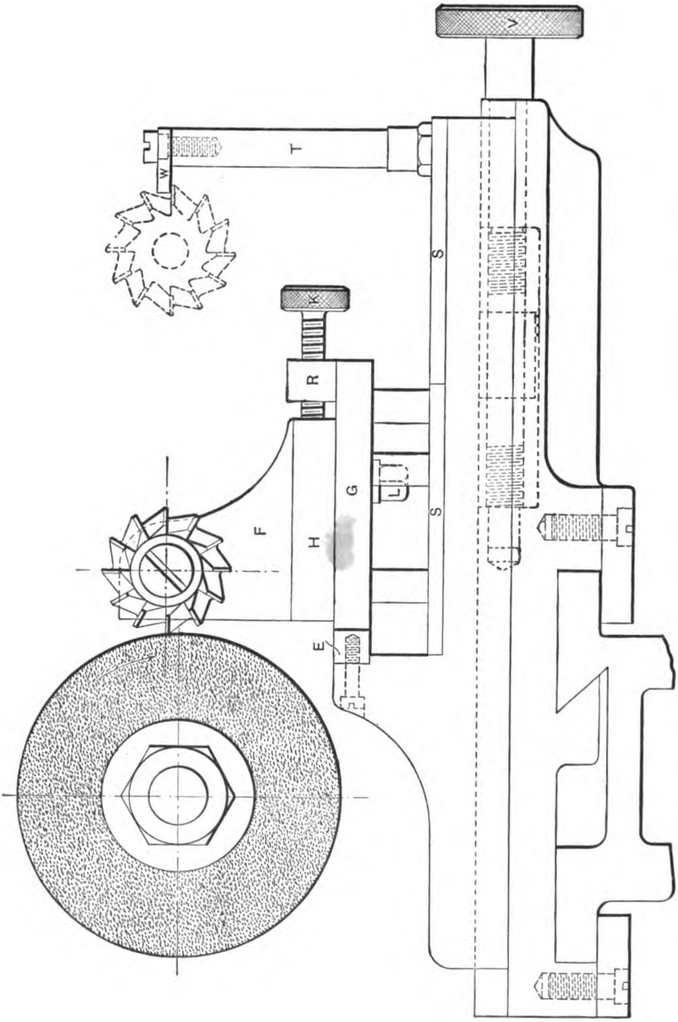

Fig. 76. Grinding Device for Fluting Cutters, on Table of Grinder

fully described later. On this base plate *G* slides a cutter holding slide *H*, which has a groove in the bottom fitting a tongue projecting from the base plate. An oblong slot is provided in the base plate as shown at *P*, so that the slide *H* can be clamped to the base plate by the screw *L* at any place within the length of the slot. The screw *K* passing through the lug *R* driven into the base plate *G*, and acting upon the slide *H*, permits the necessary adjustment. The slide *H* holds a stud or spindle *A* passing through a projecting standard *F* of the slide. The cutter to be ground is mounted on this stud.

It will be evident, upon explanation of the action of this device, that when grinding the cutters these must be so mounted upon the stud *A* that the apex of the included angle between the two angular faces (that is, the point where the angular sides would meet if extended) shall be on the same center line as the point *N* of the grinding fixture, where the two sides *C* and *D* meet (see Fig. 75). In order to obtain the fine adjustment necessary to bring these two points on the same center line, that end of stud *A* which enters into the bearing in the standard *F* is provided with threaded portions on which adjusting nuts are mounted. Collars are placed on the smaller diameter of *A* against the shoulder *M*, so that the adjustment necessary to be made by the nuts will be comparatively small, the collars taking up the main difference in width of the various cutters to be ground. On the outside end of the stud *A* is a collar *B* and a set screw having a large round slotted head, which is used for binding the collar against the cutter. It will be noted that this collar is cut off on one side to an angle. This is done in order to permit the collar to clear the emery wheel of the grinder when the side of the cutter tooth next to the collar is being ground.

As shown in Fig. 72, the cutters to be ground have their two faces connected with the small radius, different for different kinds and sizes of fluting cutters. This radius is obtained by permitting the faces of the cutter teeth to project slightly outside of the faces *C* and *D* of the base plate *G*, Fig. 75, when the cutter is in position on the stud *A*, the point of the cutter, however, still being in line with the point *N* of the device, as mentioned above. When in use, the grinding device is placed on the table of the grinding machine, as shown in Fig. 76. This table is mounted directly on the grinding-machine knee, and is provided with a guide strip *E*. The hardened shoe *N* in Fig. 75 slides against this guide strip *E* in Fig. 76, and by swinging the device around so that first the face *C* comes along the guide strip *E*, and then turning it around the point *N* until the face *D* rests against the guide strip, the cutter is ground to the same angle as that of the base plate *G* in Fig. 75, and a radius will be formed at the point of the cutter, depending upon how far the faces of the cutter teeth project outside of the faces *C* and *D* of the base plate *G*. Different angles may be obtained by putting tapered strips along the sides *C* and *D*, the angle included between the face of the strips being the same as the angle between the faces of the teeth of the cutter. The base plate for this device should be made of machine steel, and the faces *C* and *D* should be case-hardened. If tapered strips are screwed onto the faces *C* and *D* to accommodate other angles than the ones referred to, these strips should also be made of machine steel and case-hardened. Slide *H* is made of cast iron.

Referring now to Fig. 76, in which the special table on the cutter grinding machine is shown, this table consists of a cast-iron body, being provided with two tool-steel plates *S* on the top, forming the table surface. These plates are hardened and ground to prevent too rapid wear, as the feet of the grinding device constantly slide on their top surface. The guide strip *E* is also made of tool steel and hardened.

At *T* in Fig. 76 a stud is shown projecting up from the top of the table. From this stud projects an arm *W*, which is used for setting the cutter tooth, as shown, the cutter being indicated by dotted lines. It is, of course, necessary that each tooth be exactly at the same height as the others, when ground, so that the diameter of the cutter measured over any two teeth will be exactly the same. The cutter is held simply by frictional resistance, and the indexing around is done by hand by the operator. The table can be fed out and in by means of a feed screw with a knurled head *V*, thereby permitting a greater or less amount to be ground off from the teeth of different cutters.

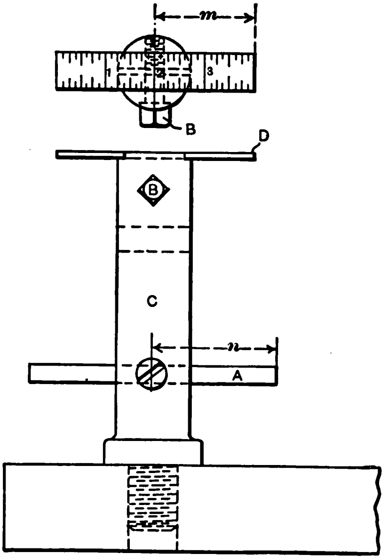

Fig. 77. Device for Setting Grinding Fixture to Grind a Certain Radius at Point of Cutter

In Fig. 77 is shown a device which is used for setting the slide *H* in Fig. 75 to such a position that the correct radius will be ground at the apex of the angle of the cutter teeth. The stud *C* is screwed into the top of any kind of a base or surface plate. This stud has a slot or groove cut in its top surface, and a regular 4-inch machinist's scale, preferably graduated in 100ths or 64ths of an inch, is laid in this slot at the top and held by means of the set screw *B*, the upper part of the round stud *C* being split so that the scale can be gripped in the slot cut for it, as if placed in a split chuck.

When the device in Fig. 75 is to be set so as to grind a certain radius, the pin *A*, Fig. 77, is placed against the edge of the point *N* of the base plate *G*, Fig. 75, and the slide *H* is adjusted so that the cutter touches the end *D* of the scale in Fig. 77. When the scale is so set that *m* equals *n*, the cutter to be ground will have no radius but will get a sharp edge at the point. When *m* is shorter than *n*, the difference between *n* and *m* will give a relative measure of the radius that will result between the faces of the cutter teeth; but it must be understood that this difference does not give the exact actual radius. This would be measured from the side *D* of the plate *G* to the side of the cutter. Of course, the arrangement in Fig. 77 may be used for measuring this length also, by placing the face *D* against pin *A* and the angular side of the cutter tooth against the end of the scale.

The device in Fig. 78, finally, is used for inspecting the cutters when ground. The cutter is placed on the stud *A*, the stud entering the hole in the cutter, and the gauge pin *B*, having a large head ground flat, is pushed up against the ends of the teeth in the cutter. This permits not only the length of the different teeth in the same cutter to be gauged, but in cases where several cutters are used in a set for fluting taps, all the cutters in the set can be gauged to find out if they are of exactly the same diameter. The gauge stud *B* is fed in and out by means of the micrometer screw *G* which has a graduated head as shown. When the stud *B* has been set to the size of one cutter in the set of cutters, it is clamped in place by the clamp screw *D*. If, however, the other cutters in the set should prove to be smaller or larger than the first cutter, the gauge screw *D* can be loosened and the micrometer screw adjusted so as to move *B* in the desired direction, and the amount that the cutters are smaller and larger than

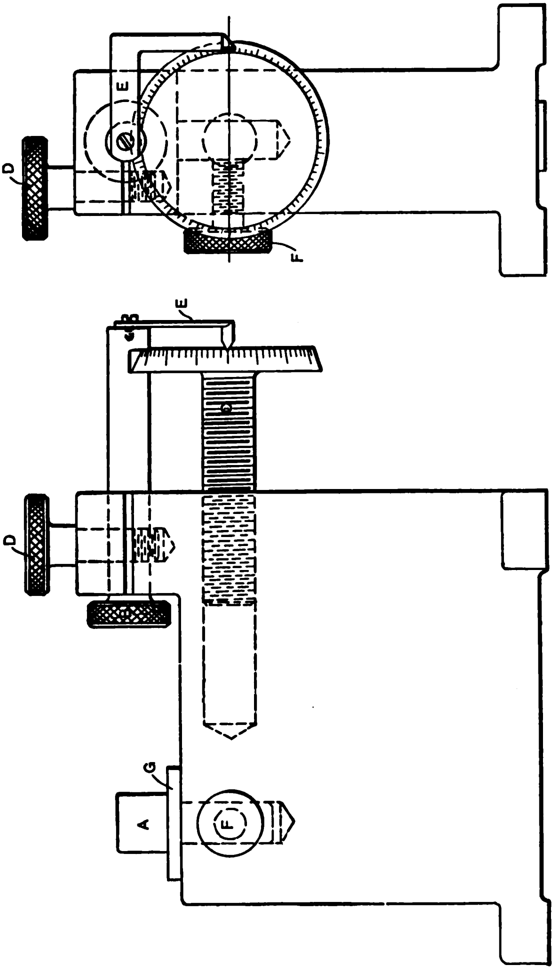

Fig. 78. Gauge for Fluting Cutters

the size of the other cutters in the set can be determined by reading off the number of thousandths directly on the graduated head of the micrometer screw *C*. This head should be graduated so that each graduation reads 0.001

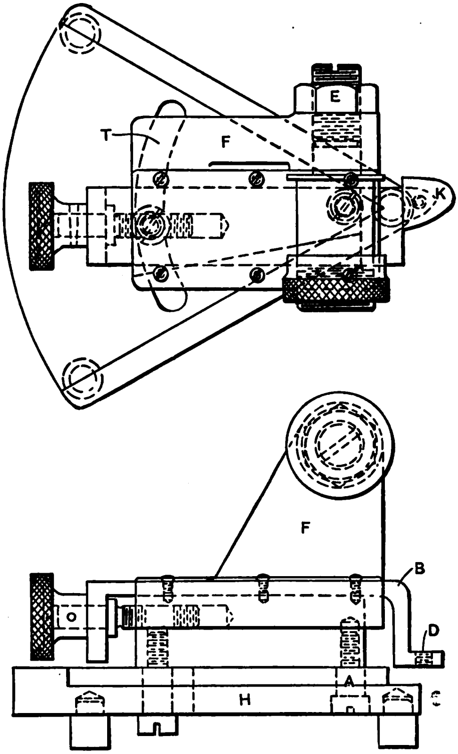

Fig. 79. Device for Grinding Formed Fluting Cutter Shown in Fig. 73

inch. A pointer *E* is screwed to the end of the gauge stud *B*, to insure correct reading of the graduations. Collars may be put on stud *A* to accommodate smaller or larger thicknesses of cutters, or the binding screw *F* may be loosened and the stud *A* moved up enough to accommodate thinner cutters, the cutters resting on the shoulder *G*.

In Fig. 79 is shown a device used in conjunction with the grinding table in Fig. 76 for grinding formed fluting cutters, with an outline similar to the one shown in Fig. 73. The principle of this device is practically the same as that in Fig. 75. It will be noticed, however, that in order to permit the device to be swung around so as to grind the complete form of the cutter a slot *T* cut on a circular arc has been provided in the base of the device, and the top portion is swiveled around the stud *A*. At the front end of the slide *B* a threaded hole *D* is provided for the screw which holds the former for the various formed cutters to this slide, the slide being adjustable to take care of the different diameters of the cutters. In Fig. 80 is shown a side view of this device, which plainly shows the design of the cutter-holding slide, the arbor, and its adjustment. It will be noticed that in this case, instead of adjusting the cutter arbor by means of two nuts on each side of standard *F*, the stud *C* has the smaller end threaded directly into the upright *F* and the nut *E* simply acts as a binding or check nut. A slot is

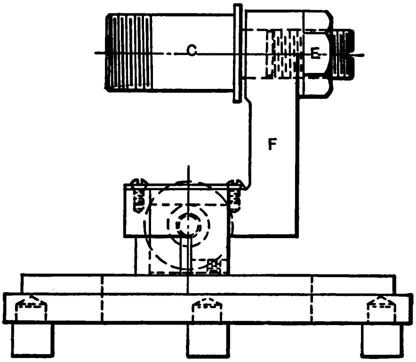

Fig. 80. Side View of Formed Fluting Cutter Grinding Device

provided for a screw-driver in the end of the stud *C* to facilitate adjustment. It will be noticed that in the device in Fig. 79 the former is not attached directly to the base of the device but is placed on an independent slide. On account of this there is no need of having any sliding adjustment between the base *H* of the device and the standard *F*, all adjustment being taken care of by the slide *B*, having the formers attached at *D*, as mentioned. The general shape of the formers used is shown at *K*, Fig. 79.

The device last described may also be used for grinding cutters for fluting drills when these cutters are made with regular milling cutter teeth. In fact, the former, shown in place in Fig. 79, is one which in form most nearly corresponds to the form of a drill fluting cutter.

RELIEF OF TAPS.

In the next place we must turn our attention to the proper relieving of hand taps. The question of proper relief is one of the most serious and particular met with in tap-making. The old and until recently the most common method was to give all the teeth a relief on the top as well as in the angle of the thread; *i.e.*, the heels of the teeth were made of smaller diameter than the diameter measured over the cutting edges, both at the top and at the root of the thread (as shown in Fig. 81). However, this has been found to be wholly unnecessary, and taps of this kind are now made without any relief at all in the angle of the thread; but the top of the thread of the *chamfered part only* is slightly relieved. To further improve upon the cutting qualities of the tap, it should be made smaller in diameter toward the shank than at the point. This difference in diameter should, of course, vary for different diameters, and the limits in variation of size permitted must, of course, also be taken into consideration. It may be said that in general practice it answers the purpose if the tap is about 0.0015 inch smaller at the shank end of the thread for taps up to one-half inch diameter, and from 0.002 to 0.003 inch smaller at this end than at the point for taps from one-half up to two inches diameter. It may be added that although this is an essentially good point in tap-making, most manufacturers do not make their taps that way, probably because it would increase the expense in the manufacture and require greater care in making.

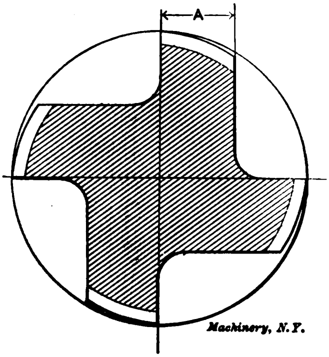

Fig. 81. Section of Tap Relieved both on Top and in Angle of Thread

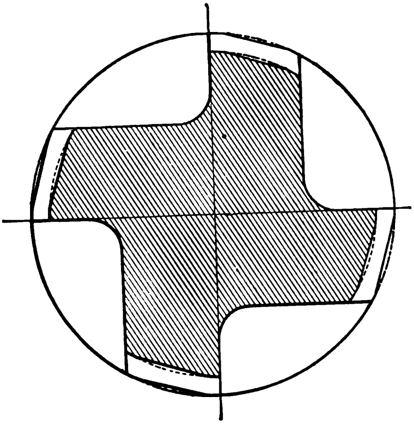

Fig. 82. Section of Tap Relieved in Center of Land

Another improvement upon a hand tap, seldom seen in taps manufactured for the market, is to give to the angle of the thread a relief in the center of the land, as shown in Fig. 82. The reason for so doing is obvious. The tap gets the same support along its periphery as if not relieved in the angle of the thread, because it retains its bearing at the heel of the thread, but as can be clearly seen a good portion of the resistance is eliminated, the bearing surface of the tap thread which is presented to the nut being considerably smaller.

Acme and square thread taps should be relieved on the top of the thread on the chamfered portion on all the taps in a set, and the finishing tap should be given relief in the center of the land on its straight or parallel portion. In cases where the taps are used as machine taps rather than as hand taps, they should be relieved in the angle of the thread as well as on the top on the chamfered portion.

Change of Pitch in Hardening.

As is well known, the pitch of a tap as well as its diameter will change in hardening, the pitch as a rule becoming shorter and the diameter larger. This tendency of change can be minimized by slow and even heating, combined with hardening at as low a heat as is possible to obtain the desired result in the tap, but it can never be fully eliminated. For this reason it is necessary to cut the thread of taps on lathes having lead screws slightly longer in the pitch than the standard. The tap will then also have a pitch slightly in excess of the standard before hardening, and if the excess length is properly selected, the tap will have a nearly correct pitch when hardened. The amount that the pitch should be longer before hardening varies, of course, according to the makes and grades of steel. To give definite rules in this matter would be impossible, more particularly so because the result of hardening may not always be shrinkage in the length of the piece to be hardened. Practical experiments have proved that in some cases, although rare, even when working with a most uniform grade of steel and handling it with the utmost care, there is no sure way of telling whether the result will be shrinkage or expansion. However, it has been found that most kinds of steel have an invariable tendency to contract lengthwise when hardened, and if this contraction has been found to be within certain limits in a few experiments, the steel may be fairly well depended upon to vary in the same way in so great a number of cases as to permit neglecting those in which unexpected results are obtained. It is of interest to note, however, that exceptional cases have been observed where different parts of the same pieces have shown considerable difference in the amount of shrinkage.

While, as stated before, definite rules cannot be laid down, it may be given as a guide that most steels have an average shrinkage of from 0.016 to 0.020 inch per foot, when the ratio between the diameter and the length of the work does not exceed say 1 to 10. When, however, the threaded piece is very long compared with the diameter, as for instance in stay-bolt taps, the contraction is proportionally greater. For very large diameters a proportionately smaller value of shrinkage between the limits given above can usually be assumed. Jessop's steel changes about the least and is the most uniform of any kind of ordinarily used steels. The average shrinkage of this steel is so small that it gives it a great range of usefulness in cases where other steels make trouble. The amount of change is only from about 0.004 inch to 0.006 inch per foot, these values being in proportion to smaller or larger diameters of work, as remarked above.

Of course many conditions will have to be taken into consideration to obtain satisfactory results. The amount of change depends not only upon the grade of steel but, as said before, upon the uniformity and amount of heat used when hardening, the rapidity and manner of cooling, and also upon the number of times the work has been through the fire. In regard to the effect upon steel of repeated annealing, a few interesting remarks might be made. If after having been through the fire once the pitch of a tap is correct, and it is annealed and hardened again, each consecutive repetition of this process will invariably bring about a growing error. Again, if a certain kind of steel should be too long in the lead after the first hardening, a second or, if necessary, a third hardening is likely to bring about a satisfactory result so far as the pitch is concerned, though this is not advisable, as tool steel generally loses its good qualities by being put through the fire too many times.

Lead Screw for Cutting Taps Long in the Lead. — In this connection it may be appropriate to give some attention to the process of producing a lead screw intended for cutting a thread which is a certain amount longer in the lead than the same thread would be if regularly pitched. If such a lead screw is to be cut on a lathe provided with a standard screw there are some difficulties in finding the change gears with which to obtain the results desired. The following formula will aid in finding the ratio of the gears to be used. In this formula

a = amount thread is longer in one foot than the same number of threads would be if regularly pitched.
n = nominal number of threads per inch on work to be threaded.
l = threads per inch on lead screw of lathe.
r = ratio of gears in head of lathe.
R = ratio of change gears to cut a thread a certain amount, a, longer in one foot than same number of threads regularly pitched.

Then

$$R = \frac{l \times r\,(12 + a)}{12\,n}.$$

The ratio of change gears having been thus obtained, the proper gears to use must be found by trial calculations.

The most common amount to cut hand taps long in the lead in one foot is about 0.018 inch. Stay-bolt taps and taps of a similar kind are often cut from 0.030 to 0.034 inch long in the lead in one foot. If we assume that we wish to cut a lead screw which is 0.018 inch long in the lead in one foot, and that the nominal number of threads per inch in this lead screw is to be 8, that the correct lead screw in the lathe used for cutting the screw has 6 threads per inch, and finally that the ratio of the gearing in the head-stock of the lathe is 2, then the ratio of change gears required to cut the lead screw in question would be

$$\frac{6 \times 2\,(12 + 0.018)}{12 \times 8} = 1.50225.$$

The trials which will give the gears which most nearly produce this ratio are more or less lengthy, but no definite rule can be given except for finding the ratio according to the above formula.

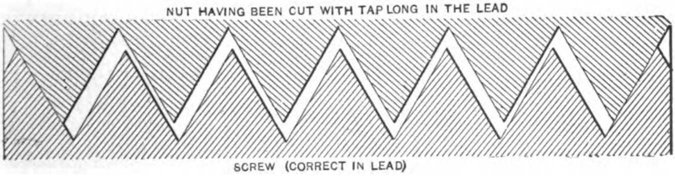

Fig. 83. Effect of Difference in Lead in Nut and Screw

Provision for Differences in Lead of Tap and Screw. — The lead of a tap cannot, however, be depended upon to be exactly correct even when the precautions referred to above are taken, but it will be within very close limits. If the tap is long in the lead the nut tapped will, of course, also be long in the lead, and will not correctly fit a standard screw. The resulting fit is shown exaggerated in Fig. 83. As this difficulty cannot be in any way eliminated, the only way possible to arrange so that a screw of standard diameter and correct lead will go into a nut of incorrect lead is to make the diameter of the nut, and consequently the tap for tapping the nut, a certain amount over-size, as is evident from Fig. 83. This amount depends upon the length of the nut to be tapped and upon the unavoidable error in the lead of the tap. As these quantities are difficult to determine particularly when making taps for general purposes in great quantities, some standard figures must be assumed which will fill the requirements in all ordinary cases. Table XXXIX gives the values of over-size near which the angle diameter of hand taps ought to be after hardening. In other words, the angle diameter must be between the standard angle diameter and the standard plus the limits of over-size stated in the table, and preferably near the larger value.

TABLE XXXIX.

LIMITS OF OVER-SIZE IN DIAMETER OF HAND TAPS.

Size of Tap in Inches.	Limit of Over-size.	Size of Tap in Inches.	Limit of Over-size.
1/16	0.00075	1 1/2	0.00275
1/8	0.001	1 3/4	0.003
1/4	0.00125	2	0.003
3/8	0.0015	2 1/4	0.0035
1/2	0.00175	2 1/2	0.0035
5/8	0.002	2 3/4	0.004
3/4	0.00225	3	0.004
7/8	0.0025	3 1/2	0.0045
1	0.0025	4	0.005
1 1/4	0.00275	....	....

Swelling of Taps in Hardening. — Table XXXIX is, of course, only of value for inspecting taps after hardening unless some data are given in regard to the amount a tap is likely to increase in diameter in the hardening process. If such data are given, it will make it possible to determine the angle diameter of the tap before hardening, the only figure which is of use in making the tap. It is extremely difficult to state anything with certainty in this respect. Experiments with taps made from the same kind of steel and under the same conditions prove that there may be very great variations in the swelling or increase in diameter of taps due to hardening. In Table XL are given such values as may be considered correct for average cases.

TABLE XL.

INCREASE OF TAPS IN DIAMETER DUE TO HARDENING.

Diameter of Tap.	Increase Due to Hardening.	Diameter of Tap.	Increase Due to Hardening.
$\frac{1}{16}$	....	$1\frac{1}{2}$	0.0025
$\frac{1}{8}$	0.00025	$1\frac{3}{4}$	0.0025
$\frac{1}{4}$	0.0005	2	0.003
$\frac{1}{2}$	0.001	$2\frac{1}{2}$	0.003
$\frac{3}{4}$	0.0015	3	0.0035
1	0.002	$3\frac{1}{2}$	0.0035
$1\frac{1}{4}$	0.002	4	0.004

As the amount of over-size necessary for a tap depends on the pitch rather than upon the diameter, the data given in Table XXXIX should be applied only to taps with standard threads.

The relationship between the pitch, the length of the nut, and the error in lead on the one hand, and the excess in angle diameter on the other, is approximately expressed by the formula

$$D_2 - D_1 = \frac{A \times N \times L}{\tan 30^\circ},$$

in which formula

D_1 = the theoretical angle diameter,
D_2 = the actual angle diameter required in the tap to compensate for the error in the lead,
A = the error in lead per each thread,
N = the number of threads per inch, and
L = the length of the nut in inches.

Diagram of Relation between Lead and Excess Diameter. — The relationship expressed by the formula above is shown in the diagram Fig. 84. This diagram gives the excess in angle diameter required over the standard angle diameter in taps to compensate for given errors in the pitch of the thread due to shrinkage in hardening. If the error in the pitch in a certain length T is given, the diagram will give the excess in pitch diameter necessary to compensate for this error, assuming that the length of the piece to be tapped equals T. If the length of the piece to be tapped does not equal T, the amount of excess in pitch diameter required is obtained from the formula $\frac{L}{T} \times E$ = excess in pitch diameter necessary to permit a correct screw to go into the tapped piece.

In this formula L = the length of the piece to be tapped and E = the excess in pitch diameter required for a piece to be tapped, the length of which equals T.

Let us assume that the given error in the pitch of the thread in a length of 3 inches is 0.001 inch. Suppose the nut to be tapped is 1¼ inches long. Then

$T = 3$; $L = 1\frac{1}{4}$; $E = 0.00175$ (found from the diagram), and according to our formula

$\frac{1\frac{1}{4}}{3} \times 0.00175 = 0.00075$ (approx.) = excess in angle diameter required.

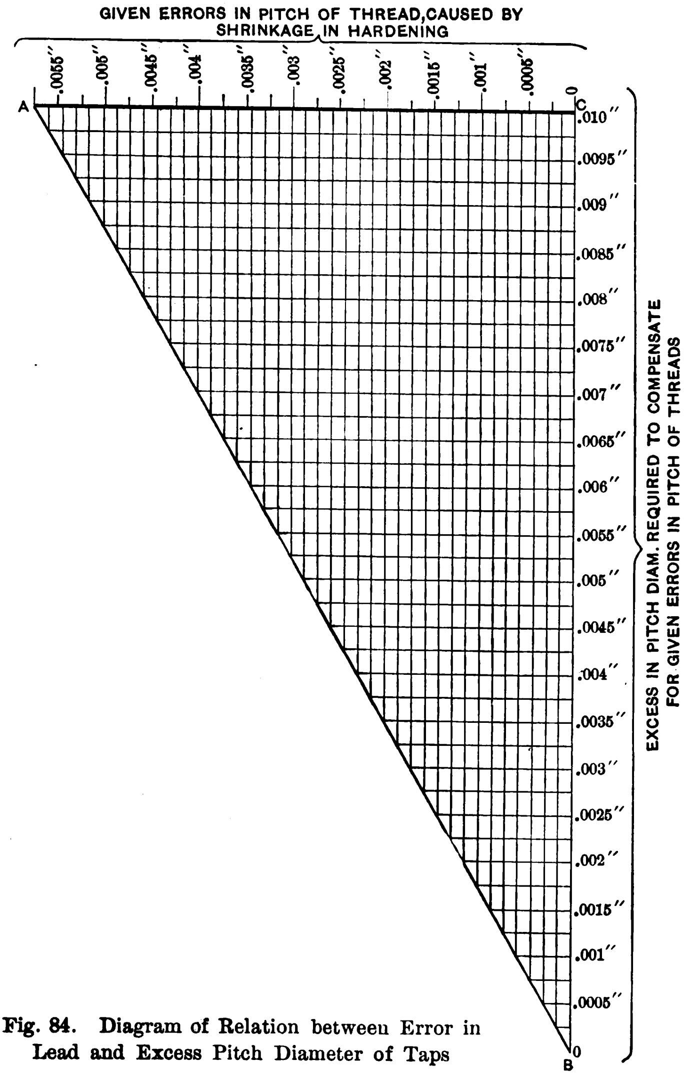

Fig. 84. Diagram of Relation between Error in Lead and Excess Pitch Diameter of Taps

The value of E is found from the diagram by finding 0.001 on the horizontal line AC; then follow the vertical line from 0.001 to the line AB; from the intersecting point on this line follow the horizontal line to BC and read off the nearest graduation on the scale on this line. The value obtained is E, or the excess in angle diameter required, provided the length of thread in which the error in lead is measured equals the length of the nut. Otherwise the amount of excess is found by the formula previously given, in the manner already explained.

It is common practice that the length of nut taken as the basis for various taps, when they are to be used on general work, is assumed to equal the diameter of the tap. It is evident, however, that this will be correct only for taps with standard threads, because when threads finer than standard are used for a certain diameter, the length of the nut is usually shorter. The excess in angle diameter should therefore properly be determined rather by the pitch than by the diameter of the tap. This is done by several firms when inspecting taps made for them by other manufacturers.

The Westinghouse Electric and Manufacturing Company makes use of a formula:

$$\text{Excess in angle diameter} = \sqrt{\text{pitch}} \times 0.01.$$

By means of this formula values a trifle larger than those given for limits of over-size in Table XXXIX are obtained. In this formula the excess angle diameter is made directly dependent upon the pitch of the thread. In Table XLI the values of the excess for a number of pitches are given. The corresponding diameters of United States standard screws are also stated. This will permit comparison to be readily made with the values in Table XXXIX. It must be remembered that these values refer to the sizes of the taps after they are hardened.

TABLE XLI.

LIMITS OF OVER-SIZE IN DIAMETERS OF HAND TAPS.

No. of Threads per Inch.	Corresponding Diameter, U. S. Standard.	Limit of Over-size = $\sqrt{\text{pitch}} \times 0.01$	No. of Threads per Inch.	Corresponding -Diameter, U. S. Standard.	Limit of Over-size = $\sqrt{\text{pitch}} \times 0.01$
3	$3\frac{3}{4}$–4	0.0058	18	$\frac{5}{16}$	0.0024
4	$2\frac{3}{8}$–$2\frac{3}{4}$	0.0050	20	$\frac{1}{4}$	0.0022
5	$1\frac{3}{4}$–$1\frac{7}{8}$	0.0045	22	....	0.0021
6	$1\frac{3}{8}$–$1\frac{1}{2}$	0.0041	24	....	0.0020
7	$1\frac{1}{8}$–$1\frac{1}{4}$	0.0038	26	....	0.0020
8	1	0.0035	28	$\frac{7}{32}$	0.0019
9	$\frac{7}{8}$	0.0035	30	....	0.0018
10	$\frac{3}{4}$	0.0032	32	$\frac{3}{16}$	0.0018
11	$\frac{5}{8}$	0.0030	36	$\frac{5}{32}$	0.0017
12	$\frac{9}{16}$	0.0029	40	$\frac{1}{8}$	0.0016
13	$\frac{1}{2}$	0.0028	50	$\frac{3}{32}$	0.0014
14	$\frac{7}{16}$	0.0027	56	....	0.0013
16	$\frac{3}{8}$	0.0025	64	$\frac{1}{16}$	0.0012

HARDENING TAPS.

As mentioned before, the amount that a tap will change in dimensions in hardening depends greatly upon the manner in which it is hardened. The heating must be made evenly throughout the tap, and it should be heated slowly; the water used for dipping should not be very cold; the tap, when dipped, should be held in a vertical position. The amounts given in the preceding tables were obtained from actual experience in the manufacturing of taps. But it must be clearly understood that the rules for hardening are all very indefinite. It is easy to say: "Heat slowly and uniformly," but not so easy to do it; and only by experience is it possible to attain uniform results in the hardening of a tap or any other tool.

Mr. E. R. Markham in *Machinery,* May, 1904, described a method of hardening taps by means of which, he claims, the original pitch and diametrical measurements can be maintained. This method is termed "pack hardening." Mr. Markham says:

"It is a well-known fact that small, thin pieces of steel can be hardened by heating red hot and dipping in oil, with little or no tendency to spring; but as steel is hardened by *rapid* cooling from a red heat and as *large* pieces of steel cool very slowly in oil, it is generally considered advisable to cool them in water, brine, or some bath which takes the heat quickly from the steel. Now it has been ascertained by experiment that steel can be treated in a manner that insures its hardening when dipped in oil, thus eliminating the danger of cracking or breaking, and reducing to the minimum the liability of springing. This is accomplished by packing the articles with some carbonaceous material in an iron box which should be covered with a flat piece of iron. The space between the edges of the box and cover should be luted with fire clay which has been mixed with water until it is of the consistency of dough. This should be allowed to dry before placing in the furnace, or the rapid drying will cause it to crack. Should it crack when drying the cracks may be filled with clay and this allowed to dry.

"The carbonaceous material used must not contain any elements that are injurious to tool steel. For this reason do not use *bone* in any form. Bone contains phosphorus, and this is extremely injurious, as it causes the steel to become brittle when it is in combination with carbon. Burned bone does not contain as high a percentage of phosphorus as the raw bone, but will not give as good results as other material we can use.

"If the steel used in making the tool does not contain over 1¼ per cent carbon, 'charred leather' is an excellent material to use when packing in the iron box. If steels of higher carbon are used, charred leather does not act as well as charred hoofs, or a mixture of charred hoofs and horns; for charred leather has a tendency to give *high-carbon* steels a grain that resembles steel made by the cementation process, when it is subjected to heat for a considerable time. But there is no such effect when charred leather is used in connection with steels that do not contain more than 1¼ per cent carbon."

The box containing the articles is heated in the furnace, and when heated throughout, the taps are taken out and immersed in a bath of raw linseed oil, working the taps up and down and around in the oil while cooling.

In drawing the temper, it is of course evident that a certain temperature can hardly be settled upon, inasmuch as various kinds of steel would not require to be drawn to exactly the same temperature. It may be said, however, that temperatures varying from 430 to 460° F. will not prove to be far from the correct ones. The lower temperature mentioned is commonly employed for the oil baths used for drawing the temper in manufacturing plants. If preference should be given to any exact temperature, it would be correct to make a rule of drawing large taps to 430 degrees and smaller ones, say up to seven-sixteenths inch inclusive, to 460° F.

When hardening in the ordinary way the tap can be heated to the greatest advantage in a crucible of molten lead heated to a red heat. There is, however, some difficulty in regard to the lead sticking to the tap. While there are some tool-makers who do not take any precautions to prevent this, it may be avoided by dipping the tap in a mixture of two parts charred leather, three parts fine flour, and four parts table salt, all thoroughly mixed while dry, and converted into a fluid by slowly adding water until the mixture has the consistency of varnish. The ingredients should be finely pulverized. This mixture will prevent the lead from sticking to the tap, and facilitates the hardening of the tap because of its carbonaceous composition. After dipping, the tap must be allowed to dry thoroughly, as otherwise, when plunging the taps in the hot lead, the latter will fly and endanger the operators.

DIMENSIONS OF ORDINARY HAND TAPS.

It has been a very common thing among manufacturers of taps, and still more among persons who only occasionally have been called upon to make these tools, to produce taps without following any definite rule as to the proportions of the various details. Little attention has been given to the possibility of expressing the relation between the diameter and the total length, for instance, by a single formula. For this reason it is very common to find that the dimensions of taps, or of any other tools of a similar character which are made in a great number of sizes, do not follow any definite rule in their proportions, except the one that a larger size has most of its dimensions a trifle larger than those of the preceding one. Various manufacturers also differ widely as to the proportions of their tools. It is, however, not impossible to express in simple formulas the rules according to which taps of proper proportions could be made. The formulas which follow are all worked out so that all the length dimensions of the tap stand in a certain relation to the diameter of the tap. This insures a tap which will be well proportioned and at the same time be well adapted for its work, even if the pitch of the thread should vary for the same diameter. The formulas are worked out with particular regard to taps with standard threads, either United States standard or sharp V thread, but will be equally serviceable for finer pitches. The formulas, as has been said, are based upon the tap diameter, this being the most convenient working factor, as, of course, the diameter is always given from the beginning. At the first glance an observer might infer that the working factor ought to be the number of threads per inch, but as that number in all standard systems is dependent upon and stands in a certain relation to the diameter, this latter factor is just as correct to work from, and gives simpler and more universal formulas.

It is obvious that formulas cannot be made up that would suit the whole range of diameters from the very smallest up to the very largest, and therefore it has been necessary to divide the series into two groups in order to obtain correct proportions, the one group including taps from three-sixteenths inch up to one inch diameter; the second from one inch up to four inches diameter.

In the formulas the following letters are used to denote the dimensions:

A = the total length of the tap,
B = the length of the thread,
C = the length of the shank,
D = the diameter of the tap,
E = the diameter of the shank,
F = the size of the square,
G = the length of the square.

For sizes up to and including one inch in diameter the formulas are:

$A = 3.5\,D + 1\tfrac{5}{8}$ inches,
$B = D + 1\tfrac{1}{2}$ inches,
$C = 1.25\,D + 1\tfrac{3}{8}$ inches,
$E =$ root diameter of thread $- 0.01$ inch,
$F = 0.75\,E$,
$G = 0.75\,D + \tfrac{1}{16}$ inch.

For sizes one inch and larger the formulas will be:

$A = 2.25\,D + 2\tfrac{7}{8}$ inches,
$B = D + 1\tfrac{1}{2}$ inches,
$C = 1.25\,D + 1\tfrac{3}{8}$ inches,
$E =$ root diameter of thread $- 0.02$ inch,
$F = 0.75\,E$,
$G = 0.33\,D + \tfrac{1}{2}$ inch.

Table XLII contains figures for the dimensions of hand taps with standard threads based on these formulas. Of course, where no necessity for close fractional dimensions exists, the dimensions are only approximately those obtained from the formulas, and are given as practical working dimensions. As seen in the table the shanks for the three-sixteenths-inch and the quarter-inch diameter taps are made equal to the diameter of the tap, according to the usual custom in manufacturing these taps.

DIMENSIONS OF ACME AND SQUARE THREAD TAPS.

It has been mentioned previously that Acme and square thread screws are usually made with coarser pitches than used for the V form of thread. For this reason the length dimensions given for ordinary hand taps do not suit those provided with the former kinds of threads. The Acme

TABLE XLII.

DIMENSIONS OF HAND TAPS.

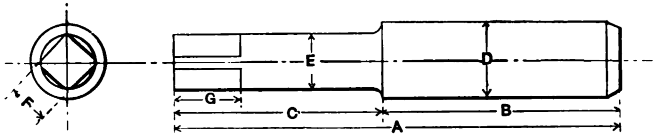

Fig. 85

Diameter of Tap.	Number of Threads per Inch.		Total Length.	Length of Thread	Length of Shank.	Diameter of Shank, *E*.		Size of Square.	Length of Square.
D.	U. S. St'd.	V St'd.	*A.*	*B.*	*C.*	U. S. St'd.	V St'd.	*F.*	*G.*
3/16	32	24	2 1/4	7/8	1 3/8	3/16	3/16	9/64	3/16
1/4	20	20	2 1/2	1	1 1/2	1/4	1/4	3/16	1/4
5/16	18	18	2 11/16	1 1/8	1 9/16	0.23	0.21	5/32	5/16
3/8	16	16	2 15/16	1 1/4	1 11/16	0.28	0.25	3/16	3/8
7/16	14	14	3 1/8	1 3/8	1 3/4	0.33	0.30	1/4	3/8
1/2	13	12	3 3/8	1 1/2	1 7/8	0.39	0.34	9/32	7/16
9/16	12	12	3 9/16	1 5/8	1 15/16	0.44	0.40	5/16	1/2
5/8	11	11	3 13/16	1 3/4	2 1/16	0.49	0.45	11/32	9/16
11/16	11	11	4	1 7/8	2 1/8	0.56	0.52	13/32	9/16
3/4	10	10	4 1/4	2	2 1/4	0.61	0.56	7/16	5/8
13/16	10	10	4 7/16	2 1/8	2 5/16	0.67	0.62	1/2	11/16
7/8	9	9	4 11/16	2 1/4	2 7/16	0.72	0.67	1/2	3/4
15/16	9	9	4 7/8	2 3/8	2 1/2	0.78	0.73	9/16	3/4
1	8	8	5 1/8	2 1/2	2 5/8	0.82	0.77	5/8	13/16
1 1/16	7	8	5 1/4	2 9/16	2 11/16	0.86	0.83	5/8	7/8
1 1/8	7	7	5 7/16	2 5/8	2 13/16	0.92	0.86	11/16	7/8
1 3/16	7	7	5 9/16	2 11/16	2 7/8	0.98	0.92	11/16	7/8
1 1/4	7	7	5 11/16	2 3/4	2 15/16	1.04	0.98	3/4	15/16
1 5/16	6	7	5 13/16	2 13/16	3	1.08	1.05	13/16	15/16
1 3/8	6	6	6	2 7/8	3 1/8	1.14	1.07	13/16	15/16
1 7/16	6	6	6 1/8	2 15/16	3 3/16	1.20	1.13	7/8	1
1 1/2	6	6	6 1/4	3	3 1/4	1.26	1.19	15/16	1
1 5/8	5 1/2	5	6 9/16	3 1/8	3 7/16	1.37	1.26	1	1 1/16
1 3/4	5	5	6 13/16	3 1/4	3 9/16	1.47	1.38	1 1/16	1 1/16
1 7/8	5	4 1/2	7 1/8	3 3/8	3 3/4	1.59	1.46	1 1/8	1 1/8
2	4 1/2	4 1/2	7 3/8	3 1/2	3 7/8	1.69	1.59	1 1/4	1 3/16
2 1/8	4 1/2	4 1/2	7 11/16	3 5/8	4 1/16	1.81	1.71	1 5/16	1 3/16
2 1/4	4 1/2	4 1/2	7 15/16	3 3/4	4 3/16	1.94	1.84	1 7/16	1 1/4
2 3/8	4	4 1/2	8 1/4	3 7/8	4 3/8	2.03	1.97	1 1/2	1 5/16
2 1/2	4	4	8 1/2	4	4 1/2	2.15	2.04	1 9/16	1 5/16
2 5/8	4	4	8 13/16	4 1/8	4 11/16	2.28	2.17	1 11/16	1 3/8
2 3/4	4	4	9 1/16	4 1/4	4 13/16	2.40	2.29	1 3/4	1 7/16
2 7/8	3 1/2	4	9 3/8	4 3/8	5	2.48	2.42	1 13/16	1 7/16
3	3 1/2	3 1/2	9 5/8	4 1/2	5 1/8	2.60	2.48	1 7/8	1 1/2
3 1/4	3 1/2	3 1/2	10 3/16	4 3/4	5 7/16	2.85	2.73	2 1/16	1 9/16
3 1/2	3 1/4	3 1/4	10 3/4	5	5 3/4	3.08	2.95	2 1/4	1 11/16
3 3/4	3	3	11 5/16	5 1/4	6 1/16	3.29	3.15	2 7/16	1 3/4
4	3	3	11 7/8	5 1/2	6 3/8	3.54	3.39	2 5/8	1 13/16

and square thread taps should also be made in sets, usually in sets of three. These conditions necessitate a separate set of dimensions for taps with these systems of thread.

When the dimensions for the diameter of each tap in the set have been ascertained in accordance with Table XXXVI, Table XLIII may be used for finding the length dimensions for Acme taps, in sets of three taps, from one-half to 3 inches diameter. The dimensions in this table apply to single-threaded taps. For multiple-threaded taps, or taps with very coarse pitch relative to the diameter, it is advisable to lengthen the dimensions for the chamfered part of the thread, leaving the other dimensions as given in the table. The size of the square of these taps is not given, depending as it does upon the varying diameters of the shank, which in turn depend on the depth of the thread. The square should, however, always be made equal to $\frac{3}{4}$ × diameter of shank. Square-thread taps are made according to the same table as Acme taps, with the exception of the figures in column K in Table XLIII, representing the full diameter of the last tap in a set of Acme-thread taps. In the case of square-thread taps column K should be equal to the nominal diameter of the tap, because, as has already been mentioned, no over-size allowance is customary in making these taps.

MACHINE SCREW TAPS.

As has been previously said, machine screw taps are only a special form of hand taps, used for tapping holes for standard machine screws. These taps are known by numbers from one to thirty. A certain outside diameter corresponds to each number, but there is no rigidly recognized number of threads corresponding to the various diameters. The form of the thread is the V shape, with an angle of 60 degrees, sharp at the bottom of the thread,

TABLE XLIII.

LENGTH DIMENSIONS OF ACME TAPS IN SETS.

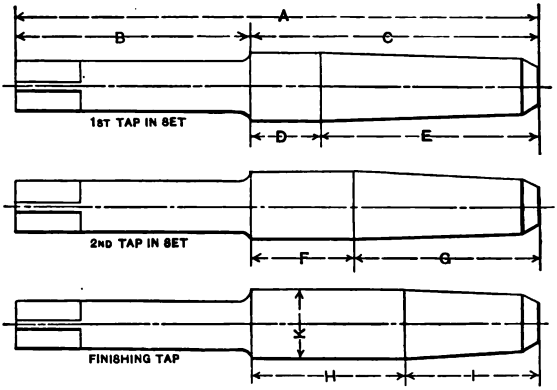

Fig. 86

Nominal Diam.	A	B	C	D	E	F	G	H	I	K
$\frac{1}{2}$	$4\frac{1}{4}$	$1\frac{7}{8}$	$2\frac{3}{8}$	$\frac{1}{2}$	$1\frac{7}{8}$	$\frac{5}{8}$	$1\frac{3}{4}$	$\frac{7}{8}$	$1\frac{1}{2}$	0.520
$\frac{9}{16}$	$4\frac{7}{8}$	$2\frac{1}{8}$	$2\frac{3}{4}$	$\frac{9}{16}$	$2\frac{3}{16}$	$\frac{3}{4}$	2	1	$1\frac{3}{4}$	0.582
$\frac{5}{8}$	$5\frac{1}{2}$	$2\frac{3}{8}$	$3\frac{1}{8}$	$\frac{5}{8}$	$2\frac{1}{2}$	$\frac{7}{8}$	$2\frac{1}{4}$	$1\frac{1}{8}$	2	0.645
$\frac{11}{16}$	6	$2\frac{1}{2}$	$3\frac{1}{2}$	$\frac{11}{16}$	$2\frac{13}{16}$	$\frac{15}{16}$	$2\frac{9}{16}$	$1\frac{1}{4}$	$2\frac{1}{4}$	0.707
$\frac{3}{4}$	$6\frac{1}{2}$	$2\frac{11}{16}$	$3\frac{13}{16}$	$\frac{11}{16}$	$3\frac{1}{8}$	1	$2\frac{13}{16}$	$1\frac{3}{8}$	$2\frac{7}{16}$	0.770
$\frac{13}{16}$	$6\frac{7}{8}$	$2\frac{13}{16}$	$4\frac{1}{16}$	$\frac{3}{4}$	$3\frac{5}{16}$	$1\frac{1}{16}$	3	$1\frac{7}{16}$	$2\frac{5}{8}$	0.832
$\frac{7}{8}$	$7\frac{1}{4}$	3	$4\frac{1}{4}$	$\frac{3}{4}$	$3\frac{1}{2}$	$1\frac{1}{8}$	$3\frac{1}{8}$	$1\frac{1}{2}$	$2\frac{3}{4}$	0.895
$\frac{15}{16}$	$7\frac{9}{16}$	$3\frac{1}{8}$	$4\frac{7}{16}$	$\frac{13}{16}$	$3\frac{5}{8}$	$1\frac{3}{16}$	$3\frac{1}{4}$	$1\frac{9}{16}$	$2\frac{7}{8}$	0.957
1	$7\frac{7}{8}$	$3\frac{1}{4}$	$4\frac{5}{8}$	$\frac{13}{16}$	$3\frac{13}{16}$	$1\frac{1}{4}$	$3\frac{3}{8}$	$1\frac{5}{8}$	3	1.020
$1\frac{1}{8}$	$8\frac{1}{2}$	$3\frac{9}{16}$	$4\frac{15}{16}$	$\frac{7}{8}$	$4\frac{1}{16}$	$1\frac{5}{16}$	$3\frac{5}{8}$	$1\frac{3}{4}$	$3\frac{3}{16}$	1.145
$1\frac{1}{4}$	9	$3\frac{3}{4}$	$5\frac{1}{4}$	$\frac{15}{16}$	$4\frac{5}{16}$	$1\frac{3}{8}$	$3\frac{7}{8}$	$1\frac{7}{8}$	$3\frac{3}{8}$	1.270
$1\frac{3}{8}$	$9\frac{1}{2}$	4	$5\frac{1}{2}$	1	$4\frac{1}{2}$	$1\frac{7}{16}$	$4\frac{1}{16}$	2	$3\frac{1}{2}$	1.395
$1\frac{1}{2}$	10	$4\frac{1}{4}$	$5\frac{3}{4}$	1	$4\frac{3}{4}$	$1\frac{1}{2}$	$4\frac{1}{4}$	$2\frac{1}{8}$	$3\frac{5}{8}$	1.520
$1\frac{5}{8}$	$10\frac{1}{2}$	$4\frac{1}{2}$	6	1	5	$1\frac{1}{2}$	$4\frac{1}{2}$	$2\frac{1}{8}$	$3\frac{7}{8}$	1.645
$1\frac{3}{4}$	11	$4\frac{3}{4}$	$6\frac{1}{4}$	$1\frac{1}{16}$	$5\frac{3}{16}$	$1\frac{9}{16}$	$4\frac{11}{16}$	$2\frac{1}{4}$	4	1.770
$1\frac{7}{8}$	$11\frac{3}{8}$	$4\frac{7}{8}$	$6\frac{1}{2}$	$1\frac{1}{16}$	$5\frac{7}{16}$	$1\frac{9}{16}$	$4\frac{15}{16}$	$2\frac{1}{4}$	$4\frac{1}{4}$	1.895
2	$11\frac{3}{4}$	5	$6\frac{3}{4}$	$1\frac{1}{8}$	$5\frac{5}{8}$	$1\frac{5}{8}$	$5\frac{1}{8}$	$2\frac{3}{8}$	$4\frac{3}{8}$	2.020
$2\frac{1}{4}$	$12\frac{1}{2}$	$5\frac{1}{4}$	$7\frac{1}{4}$	$1\frac{1}{8}$	$6\frac{1}{8}$	$1\frac{3}{4}$	$5\frac{1}{2}$	$2\frac{1}{2}$	$4\frac{3}{4}$	2.270
$2\frac{1}{2}$	$13\frac{1}{4}$	$5\frac{1}{2}$	$7\frac{3}{4}$	$1\frac{3}{16}$	$6\frac{9}{16}$	$1\frac{7}{8}$	$5\frac{7}{8}$	$2\frac{5}{8}$	$5\frac{1}{8}$	2.520
$2\frac{3}{4}$	14	$5\frac{3}{4}$	$8\frac{1}{4}$	$1\frac{1}{4}$	7	2	$6\frac{1}{4}$	$2\frac{3}{4}$	$5\frac{1}{2}$	2.770
3	15	$6\frac{1}{4}$	$8\frac{3}{4}$	$1\frac{1}{4}$	$7\frac{1}{2}$	2	$6\frac{3}{4}$	3	$5\frac{3}{4}$	3.020

but provided with a considerable flat at the top of the thread. There is no standard adopted for the size of this flat. It varies with the different pitches and diameters, and the only guidance in making these taps is to follow the standards adopted by the tap manufacturers. A list of sizes with a number of different pitches is given in Table XLIV. The outside diameter, which is constant for each size or number of tap, and the angle diameter, upon which the width of the flat depends, are given in the table. The root diameter of the thread is easily found by subtracting the depth of the sharp V thread from the angle diameter.

In regard to the making of these taps there is little to say which has not already been touched upon in connection with ordinary hand taps. They are made in sets of three, on the same principles as are used in the common method of making hand taps, that is, with the diameter of all three taps in a set the same on the straight or parallel portion. As these taps are very small, they cannot be provided with female centers, excepting on the larger sizes, particularly not at the threaded end. It is customary to provide all these taps one-quarter inch in diameter and smaller with male centers.

Machine screw taps are fluted in the same manner as hand taps. The form of the fluting cutter, its size, thickness, and the radius between the angular sides which produces the fillet in the bottom of the flute are all dimensions which may be figured from the same formulas as for regular hand taps. The radius of the cutter is perhaps the most important of these dimensions. It will be found that according to the formula

$$\text{Radius} = \frac{D}{4},$$

in which D = the diameter of the tap, the radius for sizes Nos. 1 and 2 should be about one-sixty-fourth inch, for No. 3 to No. 7 about one-thirty-second inch, for No. 8 to No. 11 about three-sixty-fourths inch, for No. 12 to No. 18 about one-sixteenth inch, for No. 19 to No. 26 about three-thirty-seconds inch, and for No. 28 and No. 30 about one-eighth inch.

The number of flutes should properly be three for sizes smaller than five-thirty-seconds inch in diameter, and four for larger sizes.

Dimensions of Machine Screw Taps. — The various length dimensions of machine screw taps may be expressed by simple formulas the same as in the case of regular hand taps. The general appearance of the former taps is shown in Fig. 87. The shank on the smaller sizes is larger than the diameter of the tap itself, and on the larger sizes equal to the diameter of the tap. On the larger sizes there is a neck between the threaded portion and the shank, but on the smaller the thread runs directly into the shank part.

In the formulas for machine screw taps,

A = the total length of the tap,
B = the length of the thread,
C = the length of the neck,
D = the diameter of the tap,
E = the length of the shank,
F = the diameter of the shank,
G = the size of the square,
H = the length of the square

TABLE XLIV.

SIZES, PITCHES, AND ANGLE DIAMETERS OF MACHINE SCREW TAPS.

No. of Tap.	No. of Threads per Inch.	Outside Diameter.	Angle Diameter.	No. of Tap.	No. of Threads per Inch.	Outside Diameter.	Angle Diameter.
1	72	0.071	0.0670	6	48	0.141	0.1291
1	64	0.071	0.0620	6	44	0.141	0.1250
1	60	0.071	0.0650	6	40	0.141	0.1290
1	56	0.071	0.0612	6	38	0.141	0.1245
1½	56	0.081	0.0710	6	36	0.141	0.1230
1½	52	0.081	0.0715	6	34	0.141	0.1235
2	64	0.089	0.0800	6	32	0.141	0.1230
2	60	0.089	0.0790	6	30	0.141	0.1155
2	56	0.089	0.0795	6	28	0.141	0.1195
2	48	0.089	0.0785	6	26	0.141	0.1160
2	40	0.089	0.0747	6	24	0.141	0.1150
2	36	0.089	0.0710	7	48	0.154	0.1415
3	64	0.101	0.0912	7	40	0.154	0.1375
3	60	0.101	0.0925	7	36	0.154	0.1360
3	56	0.101	0.0957	7	32	0.154	0.1377
3	52	0.101	0.0875	7	30	0.154	0.1320
3	50	0.101	0.0895	7	28	0.154	0.1314
3	48	0.101	0.0870	7	26	0.154	0.1310
3	44	0.101	0.0910	7	24	0.154	0.1249
3	40	0.101	0.0890	8	48	0.166	0.1535
3	36	0.101	0.0860	8	44	0.166	0.1520
3	34	0.101	0.0840	8	42	0.166	0.1525
3	32	0.101	0.0812	8	40	0.166	0.1549
4	56	0.113	0.1035	8	38	0.166	0.1530
4	52	0.113	0.1005	8	36	0.166	0.1510
4	50	0.113	0.1003	8	34	0.166	0.1520
4	48	0.113	0.1045	8	32	0.166	0.1480
4	46	0.113	0.0975	8	30	0.166	0.1457
4	44	0.113	0.1000	8	28	0.166	0.1455
4	42	0.113	0.0992	8	26	0.166	0.1435
4	40	0.113	0.1031	8	24	0.166	0.1385
4	38	0.113	0.0960	8	22	0.166	0.1432
4	36	0.113	0.1000	8	20	0.166	0.1387
4	34	0.113	0.0965	9	40	0.180	0.1625
4	32	0.113	0.0970	9	38	0.180	0.1600
4	30	0.113	0.0970	9	36	0.180.	0.1652
5	50	0.125	0.1117	9	34	0.180	0.1630
5	48	0.125	0.1135	9	32	0.180	0.1630
5	44	0.125	0.1108	9	30	0.180	0.1603
5	40	0.125	0.1140	9	28	0.180	0.1590
5	36	0.125	0.1120	9	26	0.180	0.1535
5	32	0.125	0.1199	9	24	0.180	0.1515
5	30	0.125	0.1070	10	48	0.194	0.1805

TABLE XLIV—*Continued.*

No. of Tap.	No. of Threads per Inch.	Outside Diameter.	Angle Diameter.	No. of Tap.	No. of Threads per Inch.	Outside Diameter.	Angle Diameter.
10	40	0.194	0.1753	14	24	0.246	0.2221
10	38	0.194	0.1792	14	22	0.246	0.2160
10	36	0.194	0.1760	14	20	0.246	0.2113
10	34	0.194	0.1780	14	18	0.246	0.2140
10	32	0.194	0.1710	14	16	0.246	0.2035
10	30	0.194	0.1730	15	28	0.261	0.2390
10	28	0.194	0.1685	15	26	0.261	0.2325
10	26	0.194	0.1680	15	24	0.261	0.2309
10	24	0.194	0.1680	15	22	0.261	0.2345
10	22	0.194	0.1610	15	20	0.261	0.2270
10	20	0.194	0.1592	15	18	0.261	0.2225
10	18	0.194	0.1575	16	40	0.272	0.2530
11	40	0.206	0.1927	16	36	0.272	0.2520
11	36	0.206	0.1890	16	32	0.272	0.2512
11	32	0.206	0.1925	16	28	0.272	0.2504
11	28	0.206	0.1820	16	26	0.272	0.2500
11	26	0.206	0.1800	16	24	0.272	0.2450
11	24	0.206	0.1780	16	22	0.272	0.2421
11	22	0.206	0.1764	16	20	0.272	0.2370
11	20	0.206	0.1740	16	18	0.272	0.2326
12	48	0.221	0.2095	16	16	0.272	0.2295
12	44	0.221	0.2065	16	14	0.272	0.2232
12	40	0.221	0.2048	17	24	0.285	0.2570
12	36	0.221	0.2025	17	22	0.285	0.2540
12	34	0.221	0.2035	17	20	0.285	0.2520
12	32	0.221	0.2035	17	18	0.285	0.2435
12	30	0.221	0.2013	17	16	0.285	0.2397
12	28	0.221	0.2015	18	26	0.298	0.2735
12	26	0.221	0.1970	18	24	0.298	0.2710
12	24	0.221	0.1940	18	22	0.298	0.2680
12	22	0.221	0.1900	18	20	0.298	0.2686
12	20	0.221	0.1858	18	18	0.298	0.2608
13	32	0.234	0.2140	18	16	0.298	0.2550
13	28	0.234	0.2112	19	24	0.312	0.2850
13	24	0.234	0.2080	19	20	0.312	0.2803
13	22	0.234	0.2048	19	18	0.312	0.2762
13	20	0.234	0.2005	19	16	0.312	0.2704
13	18	0.234	0.1938	20	24	0.325	0.2970
14	44	0.246	0.2307	20	22	0.325	0.2940
14	40	0.246	0.2330	20	20	0.325	0.2980
14	36	0.246	0.2310	20	18	0.325	0.2886
14	32	0.246	0.2272	20	16	0.325	0.2830
14	30	0.246	0.2220	22	24	0.350	0.3235
14	28	0.246	0.2245	22	22	0.350	0.3200
14	26	0.246	0.2231	22	20	0.350	0.3155

TABLE XLIV—*Concluded.*

No. of Tap.	No. of Threads per Inch.	Outside Diameter.	Angle Diameter.	No. of Tap.	No. of Threads per Inch.	Outside Diameter.	Angle Diameter.
22	18	0.350	0.3150	26	16	0.404	0.3592
22	16	0.350	0.3065	26	14	0.404	0.3560
24	24	0.378	0.3495	28	18	0.430	0.3905
24	22	0.378	0.3462	28	16	0.430	0.3883
24	20	0.378	0.3425	28	14	0.430	0.3826
24	18	0.378	0.3420	30	18	0.456	0.4175
24	16	0.378	0.3340	30	16	0.456	0.4166
24	14	0.378	0.3305	30	14	0.456	0.4096
26	18	0.404	0.3660	......	......	....	....

The following formulas will apply to all sizes of machine screw taps:

$$A = 5\,D + 1\tfrac{5}{16} \text{ inches},$$
$$B = 3\,D + \tfrac{3}{8} \text{ inch},$$
$$G = 0.75\,F,$$
$$H = 0.67\,D + \tfrac{1}{8} \text{ inch}.$$

F, the diameter of the shank, is 0.125 inch up to and including No. 5 machine screw tap, and equal to D for larger sizes. Up to and including No. 7 machine screw tap there is no neck between the shank and the thread. For larger sizes,

$$C = 0.75\,D.$$

For sizes up to and including No. 7,

$$E = 2\,D + \tfrac{15}{16} \text{ inch}.$$

For larger sizes,

$$E = 1.25\,D + \tfrac{15}{16} \text{ inch}.$$

The values in Table XLV are figured from these formulas, but it must be remembered that here as in the case of hand taps dimensions are only approximately those obtained from the formulas, whenever no necessity for close fractional dimensions exists.

TABLE XLV.

DIMENSIONS OF MACHINE SCREW TAPS.

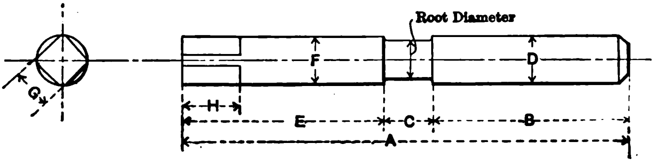

Fig. 87

No. of Tap.	Diam. of Tap.	St'rd No. of Threads.	Total Length.	Length of Thread.	Length of Neck.	Length of Shank.	Diam. of Shank.	Size of Square.	Length of Square.
	D		*A*	*B*	*C*	*E*	*F*	*G*	*H*
1	0.071	64	$1\frac{5}{8}$	$\frac{9}{16}$	......	$1\frac{1}{16}$	0.125	$\frac{3}{32}$	$\frac{3}{16}$
$1\frac{1}{2}$	0.081	56	$1\frac{11}{16}$	$\frac{5}{8}$	......	$1\frac{1}{16}$	0.125	$\frac{3}{32}$	$\frac{3}{16}$
2	0.089	56	$1\frac{3}{4}$	$\frac{5}{8}$	......	$1\frac{1}{8}$	0.125	$\frac{3}{32}$	$\frac{3}{16}$
3	0.101	48	$1\frac{13}{16}$	$\frac{11}{16}$	......	$1\frac{1}{8}$	0.125	$\frac{3}{32}$	$\frac{3}{16}$
4	0.113	36	$1\frac{7}{8}$	$\frac{11}{16}$	......	$1\frac{3}{16}$	0.125	$\frac{3}{32}$	$\frac{3}{16}$
5	0.125	36	$1\frac{15}{16}$	$\frac{3}{4}$	......	$1\frac{3}{16}$	0.125	$\frac{3}{32}$	$\frac{7}{32}$
6	0.141	32	2	$\frac{13}{16}$	......	$1\frac{3}{16}$	0.141	$\frac{7}{64}$	$\frac{7}{32}$
7	0.154	32	$2\frac{1}{16}$	$\frac{13}{16}$	......	$1\frac{1}{4}$	0.154	$\frac{7}{64}$	$\frac{7}{32}$
8	0.166	32	$2\frac{1}{8}$	$\frac{7}{8}$	$\frac{1}{8}$	$1\frac{1}{8}$	0.166	$\frac{1}{8}$	$\frac{7}{32}$
9	0.180	30	$2\frac{3}{16}$	$\frac{15}{16}$	$\frac{1}{8}$	$1\frac{1}{8}$	0.180	$\frac{1}{8}$	$\frac{1}{4}$
10	0.194	24	$2\frac{1}{4}$	$\frac{15}{16}$	$\frac{5}{32}$	$1\frac{5}{32}$	0.194	$\frac{5}{32}$	$\frac{1}{4}$
11	0.206	24	$2\frac{5}{16}$	1	$\frac{5}{32}$	$1\frac{5}{32}$	0.206	$\frac{5}{32}$	$\frac{1}{4}$
12	0.221	24	$2\frac{7}{16}$	$1\frac{1}{16}$	$\frac{5}{32}$	$1\frac{7}{32}$	0.221	$\frac{5}{32}$	$\frac{9}{32}$
13	0.234	22	$2\frac{1}{2}$	$1\frac{1}{16}$	$\frac{3}{16}$	$1\frac{1}{4}$	0.234	$\frac{3}{16}$	$\frac{9}{32}$
14	0.246	20	$2\frac{9}{16}$	$1\frac{1}{8}$	$\frac{3}{16}$	$1\frac{1}{4}$	0.246	$\frac{3}{16}$	$\frac{9}{32}$
15	0.261	20	$2\frac{5}{8}$	$1\frac{3}{16}$	$\frac{3}{16}$	$1\frac{1}{4}$	0.261	$\frac{3}{16}$	$\frac{5}{16}$
16	0.272	18	$2\frac{11}{16}$	$1\frac{3}{16}$	$\frac{7}{32}$	$1\frac{9}{32}$	0.272	$\frac{7}{32}$	$\frac{5}{16}$
18	0.298	18	$2\frac{13}{16}$	$1\frac{1}{4}$	$\frac{7}{32}$	$1\frac{11}{32}$	0.298	$\frac{7}{32}$	$\frac{5}{16}$
20	0.325	16	$2\frac{15}{16}$	$1\frac{3}{8}$	$\frac{7}{32}$	$1\frac{11}{32}$	0.325	$\frac{1}{4}$	$\frac{11}{32}$
22	0.350	16	$3\frac{1}{16}$	$1\frac{7}{16}$	$\frac{1}{4}$	$1\frac{3}{8}$	0.350	$\frac{1}{4}$	$\frac{11}{32}$
24	0.378	16	$3\frac{3}{16}$	$1\frac{1}{2}$	$\frac{9}{32}$	$1\frac{13}{32}$	0.378	$\frac{9}{32}$	$\frac{3}{8}$
26	0.404	16	$3\frac{5}{16}$	$1\frac{9}{16}$	$\frac{5}{16}$	$1\frac{7}{16}$	0.404	$\frac{5}{16}$	$\frac{3}{8}$
28	0.430	14	$3\frac{7}{16}$	$1\frac{11}{16}$	$\frac{5}{16}$	$1\frac{7}{16}$	0.430	$\frac{5}{16}$	$\frac{13}{32}$
30	0.456	14	$3\frac{9}{16}$	$1\frac{3}{4}$	$\frac{5}{16}$	$1\frac{1}{2}$	0.456	$\frac{11}{32}$	$\frac{7}{16}$

The limits of over-size in diameter of machine screw taps after hardening should be made as indicated by Table XLVI.

TABLE XLVI.

LIMIT OF OVER-SIZE IN DIAMETER OF MACHINE SCREW TAPS AFTER HARDENING.

Diameter of Tap. Inches.	Limit of Over-size.	Diameter of Tap. Inches.	Limit of Over-size.	Diameter of Tap Inches.	Limit of Over-size.
$\frac{1}{16}$	0.00075	$\frac{5}{32}-\frac{3}{16}$	0.00125	$\frac{9}{32}-\frac{5}{16}$	0.002
$\frac{3}{32}-\frac{1}{8}$	0.001	$\frac{7}{32}-\frac{1}{4}$	0.0015	$\frac{11}{32}-\frac{7}{16}$	0.0025

A. S. M. E. STANDARD MACHINE SCREWS.

We mentioned in Chapter I the standard for machine screws, approved and adopted by the American Society of Mechanical Engineers. The dimensions for the thread quantities, according to this standard, are given in Tables XLVII, XLVIII, XLIX, and L, for both taps and screws, regular and special.

TABLE XLVII.

A. S. M. E. STANDARD MACHINE SCREWS.

Old.	New.	Outside Diameters.			Pitch Diameters.			Root Diameters.		
No.	Outside Diam. and Threads per Inch.	Minimum.	Maximum.	Difference.	Minimum.	Maximum.	Difference.	Minimum.	Maximum.	Difference.
0	0.060–80	0.0572	0.060	0.0028	0.0505	0.0519	0.0014	0.0410	0.0438	0.0028
1	0.073–72	0.0700	0.073	0.0030	0.0625	0.0640	0.0015	0.0520	0.0550	0.0030
2	0.086–64	0.0828	0.086	0.0032	0.0743	0.0759	0.0016	0.0624	0.0657	0.0033
3	0.099–56	0.0955	0.099	0.0035	0.0857	0.0874	0.0017	0.0721	0.0758	0.0037
4	0.112–48	0.1082	0.112	0.0038	0.0966	0.0985	0.0019	0.0807	0.0849	0.0042
5	0.125–44	0.1210	0.125	0.0040	0.1082	0.1102	0.0020	0.0910	0.0955	0.0045
6	0.138–40	0.1338	0.138	0.0042	0.1197	0.1218	0.0021	0.1007	0.1055	0.0048
7	0.151–36	0.1466	0.151	0.0044	0.1308	0.1330	0.0022	0.1097	0.1149	0.0052
8	0.164–36	0.1596	0.164	0.0044	0.1438	0.1460	0.0022	0.1227	0.1279	0.0052
9	0.177–32	0.1723	0.177	0.0047	0.1544	0.1567	0.0023	0.1307	0.1364	0.0057
10	0.190–30	0.1852	0.190	0.0048	0.1660	0.1684	0.0024	0.1407	0.1467	0.0060
12	0.216–28	0.2111	0.216	0.0049	0.1904	0.1928	0.0024	0.1633	0.1696	0.0063
14	0.242–24	0.2368	0.242	0.0052	0.2123	0.2149	0.0026	0.1808	0.1879	0.0071
16	0.268–22	0.2626	0.268	0.0054	0.2358	0.2385	0.0027	0.2014	0.2090	0.0076
18	0.294–20	0.2884	0.294	0.0056	0.2587	0.2615	0.0028	0.2208	0.2290	0.0082
20	0.320–20	0.3144	0.320	0.0056	0.2847	0.2875	0.0028	0.2468	0.2550	0.0082
22	0.346–18	0.3402	0.346	0.0058	0.3070	0.3099	0.0029	0.2649	0.2738	0.0089
24	0.372–16	0.3660	0.372	0.0060	0.3284	0.3314	0.0030	0.2810	0.2908	0.0098
26	0.398–16	0.3920	0.398	0.0060	0.3544	0.3574	0.0030	0.3070	0.3168	0.0098
28	0.424–14	0.4178	0.424	0.0062	0.3745	0.3776	0.0031	0.3204	0.3312	0.0108
30	0.450–14	0.4438	0.450	0.0062	0.4005	0.4036	0.0031	0.3464	0.3572	0.0108

TABLE XLVIII.

A. S. M. E. STANDARD MACHINE SCREW TAPS.

Old.	New.	Outside Diameters.			Pitch Diameters.			Root Diameters.			Tap Drill Diameters.
No.	Out. Diam. and Thrds. per Inch.	Minimum.	Maximum.	Difference.	Minimum.	Maximum.	Difference.	Minimum.	Maximum.	Difference.	
0	0.060–80	0.0609	0.0632	0.0023	0.0528	0.0538	0.0010	0.0447	0.0466	0.0019	0.0465
1	0.073–72	0.0740	0.0765	0.0025	0.0650	0.0660	0.0010	0.0560	0.0580	0.0020	0.0595
2	0.086–64	0.0871	0.0898	0.0027	0.0770	0.0781	0.0011	0.0668	0.0689	0.0021	0.0700
3	0.099–56	0.1002	0.1033	0.0031	0.0886	0.0897	0.0011	0.0770	0.0793	0.0023	0.0785
4	0.112–48	0.1133	0.1168	0.0035	0.0998	0.1010	0.0012	0.0852	0.0887	0.0025	0.0890
5	0.125–44	0.1263	0.1301	0.0038	0.1116	0.1129	0.0013	0.0968	0.0995	0.0027	0.0995
6	0.138–40	0.1394	0.1435	0.0041	0.1232	0.1246	0.0014	0.1069	0.1097	0.0028	0.1100
7	0.151–36	0.1525	0.1569	0.0044	0.1345	0.1359	0.0014	0.1164	0.1193	0.0029	0.1200
8	0.164–36	0.1655	0.1699	0.0044	0.1475	0.1489	0.0014	0.1294	0.1323	0.0029	0.1360
9	0.177–32	0.1786	0.1835	0.0049	0.1583	0.1598	0.0015	0.1380	0.1411	0.0031	0.1405
10	0.190–30	0.1916	0.1968	0.0052	0.1700	0.1716	0.0016	0.1483	0.1515	0.0032	0.1520
12	0.216–28	0.2176	0.2232	0.0056	0.1944	0.1961	0.0017	0.1712	0.1745	0.0033	0.1730
14	0.242–24	0.2438	0.2500	0.0062	0.2167	0.2184	0.0017	0.1896	0.1931	0.0035	0.1935
16	0.268–22	0.2698	0.2765	0.0067	0.2403	0.2421	0.0018	0.2108	0.2144	0.0036	0.2130
18	0.294–20	0.2959	0.3031	0.0072	0.2634	0.2652	0.0018	0.2309	0.2346	0.0037	0.2340
20	0.320–20	0.3219	0.3291	0.0072	0.2894	0.2912	0.0018	0.2569	0.2606	0.0037	0.2610
22	0.346–18	0.3479	0.3559	0.0080	0.3118	0.3138	0.0020	0.2757	0.2796	0.0039	0.2810
24	0.372–16	0.3740	0.3828	0.0088	0.3334	0.3354	0.0020	0.2928	0.2968	0.0040	0.2970
26	0.398–16	0.4000	0.4088	0.0088	0.3594	0.3614	0.0020	0.3188	0.3228	0.0040	0.3230
28	0.424–14	0.4261	0.4359	0.0098	0.3797	0.3818	0.0021	0.3333	0.3374	0.0041	0.3390
30	0.450–14	0.4521	0.4619	0.0098	0.4057	0.4078	0.0021	0.3593	0.3634	0.0041	0.3680

TABLE XLIX.

A. S. M. E. SPECIAL MACHINE SCREWS.

Old.	New.	Outside Diameters.			Pitch Diameters.			Root Diameters.		
No.	Outside Diam. and Threads per Inch.	Minimum.	Maximum.	Difference.	Minimum.	Maximum.	Difference.	Minimum.	Maximum.	Difference.
1	0.073–64	0.0698	0.073	0.0032	0.0613	0.0629	0.0016	0.0494	0.0527	0.0033
2	0.086–56	0.0825	0.086	0.0035	0.0727	0.0744	0.0017	0.0591	0.0628	0.0037
3	0.099–48	0.0952	0.099	0.0038	0.0836	0.0855	0.0019	0.0677	0.0719	0.0042
4	0.112–40	0.1078	0.112	0.0042	0.0937	0.0958	0.0021	0.0747	0.0795	0.0048
	36	0.1076	0.112	0.0044	0.0918	0.0940	0.0022	0.0707	0.0759	0.0052
5	0.125–40	0.1208	0.125	0.0042	0.1067	0.1088	0.0021	0.0877	0.0925	0.0048
	36	0.1206	0.125	0.0044	0.1048	0.1070	0.0022	0.0837	0.0889	0.0052
6	0.138–36	0.1336	0.138	0.0044	0.1178	0.1200	0.0022	0.0967	0.1019	0.0052
	32	0.1333	0.138	0.0047	0.1154	0.1177	0.0023	0.0917	0.0974	0.0057
7	0.151–32	0.1463	0.151	0.0047	0.1284	0.1307	0.0023	0.1047	0.1104	0.0057
	30	0.1462	0.151	0.0048	0.1270	0.1294	0.0024	0.1017	0.1077	0.0060
8	0.164–32	0.1593	0.164	0.0047	0.1414	0.1437	0.0023	0.1177	0.1234	0.0057
	30	0.1592	0.164	0.0048	0.1400	0.1424	0.0024	0.1147	0.1207	0.0060
9	0.177–30	0.1722	0.177	0.0048	0.1529	0.1553	0.0024	0.1277	0.1337	0.0060
	24	0.1718	0.177	0.0052	0.1473	0.1499	0.0026	0.1158	0.1229	0.0071
10	0.190–32	0.1853	0.190	0.0047	0.1674	0.1697	0.0023	0.1437	0.1494	0.0057
	24	0.1848	0.190	0.0052	0.1603	0.1629	0.0026	0.1288	0.1359	0.0071
12	0.216–24	0.2108	0.216	0.0052	0.1863	0.1889	0.0026	0.1548	0.1619	0.0071
14	0.242–20	0.2364	0.242	0.0056	0.2067	0.2095	0.0028	0.1688	0.1770	0.0082
16	0.268–20	0.2624	0.268	0.0056	0.2327	0.2355	0.0028	0.1948	0.2030	0.0082
18	0.294–18	0.2882	0.294	0.0058	0.2550	0.2579	0.0029	0.2129	0.2218	0.0089
20	0.320–18	0.3142	0.320	0.0058	0.2810	0.2839	0.0029	0.2389	0.2478	0.0089
22	0.346–16	0.3400	0.346	0.0060	0.3024	0.3054	0.0030	0.2550	0.2648	0.0098
24	0.372–18	0.3662	0.372	0.0058	0.3330	0.3359	0.0029	0.2909	0.2998	0.0089
26	0.398–14	0.3918	0.398	0.0062	0.3485	0.3516	0.0031	0.2944	0.3052	0.0108
28	0.424–16	0.4180	0.424	0.0060	0.3804	0.3834	0.0030	0.3330	0.3428	0.0098
30	0.450–16	0.4440	0.450	0.0060	0.4064	0.4094	0.0030	0.3590	0.3688	0.0098

TABLE L.

A. S. M. E. SPECIAL MACHINE SCREW TAPS.

Old.	New.	Outside Diameter.			Pitch Diameters.			Root Diameters.			
No.	Out. Diam. and Thrds. per Inch.	Minimum.	Maximum.	Difference.	Minimum.	Maximum.	Difference.	Minimum.	Maximum.	Difference.	Tap Drill Diameters.
1	0.073–64	0.0741	0.0768	0.0027	0.0640	0.0651	0.0011	0.0538	0.0559	0.0021	0.0550
2	0.086–56	0.0872	0.0903	0.0031	0.0756	0.0767	0.0011	0.0640	0.0663	0.0023	0.0670
3	0.099–48	0.1003	0.1038	0.0035	0.0868	0.0880	0.0012	0.0732	0.0757	0.0025	0.0760
4	0.112–40	0.1134	0.1175	0.0041	0.0972	0.0986	0.0014	0.0809	0.0837	0.0028	0.0820
	36	0.1135	0.1179	0.0044	0.0955	0.0969	0.0014	0.0774	0.0803	0.0029	0.0810
5	0.125–40	0.1264	0.1305	0.0041	0.1102	0.1116	0.0014	0.0939	0.0967	0.0028	0.0980
	36	0.1265	0.1309	0.0044	0.1085	0.1099	0.0014	0.0904	0.0933	0.0029	0.0935
6	0.138–36	0.1395	0.1439	0.0044	0.1215	0.1229	0.0014	0.1034	0.1063	0.0029	0.1065
	32	0.1396	0.1445	0.0049	0.1193	0.1208	0.0015	0.0990	0.1021	0.0031	0.1015
7	0.151–32	0.1526	0.1575	0.0049	0.1323	0.1338	0.0015	0.1120	0.1151	0.0031	0.1160
	30	0.1526	0.1578	0.0052	0.1310	0.1326	0.0016	0.1093	0.1125	0.0032	0.1130
8	0.164–32	0.1656	0.1705	0.0049	0.1453	0.1468	0.0015	0.1250	0.1281	0.0031	0.1285
	30	0.1656	0.1708	0.0052	0.1440	0.1456	0.0016	0.1223	0.1255	0.0032	0.1285
9	0.177–30	0.1786	0.1838	0.0052	0.1569	0.1585	0.0016	0.1353	0.1385	0.0032	0.1405
	24	0.1788	0.1850	0.0062	0.1517	0.1534	0.0017	0.1247	0.1282	0.0035	0.1285
10	0.190–32	0.1916	0.1965	0.0049	0.1713	0.1728	0.0015	0.1510	0.1541	0.0031	0.1540
	24	0.1918	0.1980	0.0062	0.1647	0.1664	0.0017	0.1377	0.1412	0.0035	0.1405
12	0.216–24	0.2178	0.2240	0.0062	0.1907	0.1924	0.0017	0.1637	0.1672	0.0035	0.1660
14	0.242–20	0.2439	0.2511	0.0072	0.2114	0.2132	0.0018	0.1789	0.1826	0.0037	0.1820
16	0.268–20	0.2699	0.2771	0.0072	0.2374	0.2392	0.0018	0.2049	0.2086	0.0037	0.2090
18	0.294–18	0.2959	0.3039	0.0080	0.2598	0.2618	0.0020	0.2237	0.2276	0.0039	0.2280
20	0.320–18	0.3219	0.3299	0.0080	0.2858	0.2878	0.0020	0.2497	0.2536	0.0039	0.2570
22	0.346–16	0.3480	0.3568	0.0088	0.3074	0.3094	0.0020	0.2668	0.2708	0.0040	0.2720
24	0.372–18	0.3739	0.3819	0.0080	0.3378	0.3398	0.0020	0.3017	0.3056	0.0039	0.3125
26	0.398–14	0.4001	0.4099	0.0098	0.3537	0.3558	0.0021	0.3073	0.3114	0.0041	0.3125
28	0.424–16	0.4260	0.4348	0.0088	0.3854	0.3874	0.0020	0.3448	0.3488	0.0040	0.3480
30	0.450–16	0.4520	0.4608	0.0088	0.4114	0.4134	0.0020	0.3708	0.3748	0.0040	0.3770

PULLEY TAPS.

Pulley taps are another special form of hand taps. Their particular use has been previously referred to. The shank of the pulley tap is usually the full diameter of the thread; this gives the long tap a guide in starting the thread, inasmuch as the shank may be a fair fit in the hole in the pulley rim, through which it must pass to reach the hub.

The tap is provided with a neck between the thread and the shank, the purpose of which is mainly to facilitate the threading when the tap is made. The diameter of this neck should be about 0.005 inch below the root diameter of the thread. The length of the thread is shorter than on hand taps of corresponding size. The chamfer is made like the chamfer on a plug tap in a set of three taps, that is, the tap is chamfered at the point for about three or four threads. As these taps are seldom required to tap down to the bottom of a hole, a tap thus chamfered will be the most suitable.

The tap should be relieved on the top of the thread of the chamfered portion, but not on the straight or parallel portion of the thread. This latter requirement is particularly important, as a pulley tap must always be backed out, and if relieved on the straight portion, chips might easily wedge in between the thread being cut and the thread on the tap, surely injuring the former and not unlikely to break off the teeth in the latter.

The form of flute and the number of flutes should be the same as for regular hand taps. The flute should not be continued at the upper end any longer than necessary to provide the last thread of the tap with a cutting edge, partly because it spoils the appearance of the tap if the flutes run into the shank, but primarily because the tap is greatly weakened and liable to break at the neck if the flutes run through the neck to their full depth.

TABLE LI.

DIMENSIONS OF PULLEY TAPS WITH U. S. STANDARD THREAD.

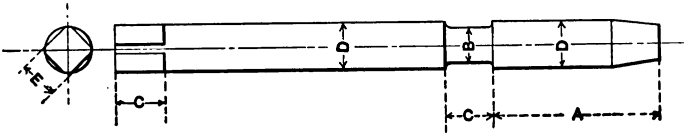

Fig. 88

Diameter of Tap.	Length of Thread.	Diameter of Neck.	Length of Neck and Square.	Size of Square.
D	*A*	*B*	*C*	*E*
$\frac{1}{4}$	$1\frac{1}{4}$	0.180	$\frac{1}{4}$	$\frac{3}{16}$
$\frac{5}{16}$	$1\frac{3}{8}$	0.235	$\frac{5}{16}$	$\frac{1}{4}$
$\frac{3}{8}$	$1\frac{1}{2}$	0.289	$\frac{3}{8}$	$\frac{9}{32}$
$\frac{7}{16}$	$1\frac{5}{8}$	0.340	$\frac{7}{16}$	$\frac{5}{16}$
$\frac{1}{2}$	$1\frac{3}{4}$	0.395	$\frac{1}{2}$	$\frac{3}{8}$
$\frac{9}{16}$	$1\frac{7}{8}$	0.449	$\frac{9}{16}$	$\frac{7}{16}$
$\frac{5}{8}$	2	0.502	$\frac{5}{8}$	$\frac{15}{32}$
$\frac{11}{16}$	$2\frac{1}{8}$	0.564	$\frac{11}{16}$	$\frac{1}{2}$
$\frac{3}{4}$	$2\frac{1}{4}$	0.615	$\frac{3}{4}$	$\frac{9}{16}$
$\frac{7}{8}$	$2\frac{1}{2}$	0.726	$\frac{7}{8}$	$\frac{5}{8}$
1	$2\frac{3}{4}$	0.833	1	$\frac{3}{4}$
$1\frac{1}{8}$	3	0.934	$1\frac{1}{8}$	$\frac{7}{8}$
$1\frac{1}{4}$	$3\frac{1}{4}$	1.059	$1\frac{1}{4}$	$\frac{15}{16}$

Dimensions of Pulley Taps. — In Table LI dimensions are given for pulley taps for sizes from one-quarter to $1\frac{1}{4}$ inches in diameter. These taps, however, are rarely made in sizes larger than one inch diameter. The total length cannot be given, as that dimension varies with the requirements. The only dimensions we can give besides the diameter of the shank, which should equal the diameter of the thread, and the diameter of the neck, which has been referred to previously, are the length of the thread and the length of the neck. If D equals the diameter of the tap and A the length of the thread, we may write down the formula

$$A = \frac{8D + 3}{4}.$$

The length of the neck is made equal to the diameter of the tap. The length of the square may also be made equal to the diameter of the tap, and the size of the square equal to three-fourths times the diameter.

The over-size limits of pulley taps after hardening are the same as for regular hand taps (see Table XXXIX).

CHAPTER V.

TAPPER TAPS AND MACHINE TAPS. — SCREW MACHINE TAPS. — HOBS AND DIE TAPS.

TAPPER TAPS.

Definition and General Appearance. — The name tapper tap as understood by tool-makers and tap manufacturers is applied to one of the two kinds of taps used for tapping nuts in tapping machines. It is often confused with the expression "machine tap," which properly designates the second kind of taps used for this purpose. The machine tap, however, differs from the tapper tap in a number of particulars, most important of which are the number and the form of the flutes, the relief of the threads, and the general design. The tapper tap is the earlier of the two, and is simpler in its details. It is not adapted for the same hard usage as a machine tap, but is largely used for tapping nuts for general purposes in material which is not of too tough a structure.

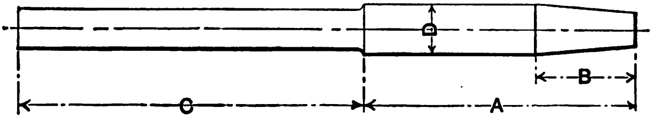

Fig. 89. General Appearance of Tapper Taps

The general appearance and design of the tap is shown in Fig. 89. It consists of a threaded portion A, chamfered on the top of the thread for a distance B, and a shank C, which as a rule is not provided with a square on the end, this being unnecessary because the tap is usually held firmly in a chuck by its circular shank. Some manufacturers using these taps prefer, however, to have the shank flatted on two sides, enabling them to secure a firmer hold on the tap in the machine. The diameter of the shank should be at least 0.015 inch smaller than the diameter at the root of the thread, in order to permit the threaded nuts to slide freely over the shank.

Turning and Threading. — In turning and threading tapper taps, as well as any other taps, it must be remembered that the straight part of the threaded portion must be left a certain amount over the standard size. The screw which is to fit the nut threaded by the tap is usually made of a standard diameter, and the nut therefore must evidently be somewhat in excess of this in order to permit the screw to enter and to allow for slight unavoidable differences in the lead of the thread between the screw and the nut. The amount which a tap should thus be left over the standard diameter is largely a matter of judgment, inasmuch as this amount must vary according to whether a tight, free, or loose fit is desired between the screw and the nut made by the tap. For general purposes, however, the tap should be made between the limits of from 0.0005 inch to 0.0015 inch over-size before hardening for sizes not over one-half inch diameter, from 0.001 inch to 0.002 inch for sizes between one-half and one inch, and from 0.0015 inch to 0.003 inch for sizes between one and two inches in diameter. Tapper taps are rarely made in sizes larger than two inches. When larger diameters of taps are required for nut tapping, the taps should preferably be made on the principles of machine taps.

Fluting. — It has been the general practice to flute tapper taps practically the same as hand taps. It is, however, not necessary to make the lands as wide as on these latter taps, because there is not the same tendency for a tapper tap to deviate from its true course, the tapper tap being guided by the firm grip of the chuck, while a hand tap depends solely upon the lands of its threaded portion for guidance. In regard to the number of flutes there is some difference of opinion. The practice adhered to by prominent tool manufacturers is to give four flutes to all taps up to and inclusive of one and one-half inches diameter, and five flutes for larger sizes. The fluting cutter for straight-sided flutes should have an inclusive angle of 85 degrees, 55 degrees on one side and 30 degrees on the other, the same as for hand taps.

Relief. — The next question of importance is that of the relief given to the thread. Tapper taps as a rule are relieved only on the top of the thread of the chamfered portion. They are not given any relief in the angle of the thread. The straight part, which performs no cutting, being nothing but the sizing part of the tap, should not be relieved, or, if relieved, the relief should be very slight in order to permit the tap to retain its size so much longer. It may be remarked that if the tap is backed out through the nut no relief at all should be permitted on the parallel part of the thread, because of the liability of chips getting in between the land and the thread in the nut and injuring tap as well as nut.

Tapper taps when being hardened should be drawn to a temper of 430° F. What has been said in the previous chapter in regard to the influence of hardening upon hand taps is, of course, equally true of tapper taps. The general tables given in that connection apply to all kinds of taps.

Dimensions of Tapper Taps. — The accompanying formulas, and Table LII figured from them, give the common proportions of length of thread and length of chamfered part of tapper taps. The length over all depends solely upon the kind of work on which the tap is to be used. It is the common manufacturing practice to make these taps 11 inches long over all. The formulas are based upon the diameter of the tap, as this is the most convenient working factor. In the table the values are given approximately, as there is no reason to work closer than to one-sixteenth or even one-eighth inch in regard to length dimensions of this character.

In the formulas,

A = the length of the thread,
B = the parallel part of the thread,
C = the chamfered part of the thread,
D = the diameter of the tap,
E = the diameter of the shank,
F = the diameter at the point of the thread.

The formulas for tapper taps up to and including nine-sixteenths inch are as follows:

$A = 4.5\,D + \frac{5}{16}$ inch,
$B = 2.75\,D + \frac{3}{16}$ inch,
$C = 1.75\,D + \frac{1}{8}$ inch,
E = root diameter of thread – 0.01 inch,
F = root diameter of thread – ($0.005\,D$ + 0.005 inch).

For sizes from five-eighths inch diameter to 2 inches inclusive the formulas are:

$A = 2\,D + 1\frac{3}{4}$ inches,
$B = 1.25\,D + 1$ inch,
$C = 0.75\,D + \frac{3}{4}$ inch,
E = root diameter of thread – 0.02 inch,
F = root diameter of thread – ($0.005\,D$ + 0.005 inch).

By means of the formulas given the dimensions for any intermediate size between those tabulated in Table LII may easily be determined. It is understood, of course, that the formulas have a great degree of flexibility, and that they are proposed only in order to facilitate the work of the tool-maker or draftsman, to whom it is often left to settle upon the dimensions for these tools. The tables are worked out in order to save figuring in each individual case, but, as stated previously, give only approximate working dimensions, and do not give the close theoretical values figured from the formulas excepting when essential.

TABLE LII.

DIMENSIONS OF TAPPER TAPS.

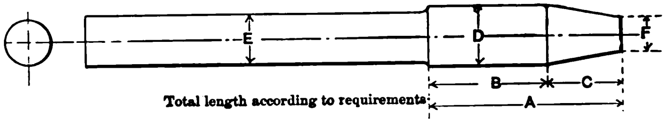

Fig. 90

Diam. of Tap.	Number of Threads per Inch.		Length of Thread	Length of Straight Part.	Length of Chamfered Part.	Diameter of Shank, *E*.		Diameter of Point, *F*.	
D.	U. S. St'd.	V St'd.	*A*.	*B*.	*C*.	U. S. St'd.	V St'd.	U. S. St'd.	V St'd.
3/16	32	24	1 3/16	3/4	7/16	0.14	0.11	0.140	0.110
1/4	20	20	1 7/16	7/8	9/16	0.17	0.15	0.179	0.157
5/16	18	18	1 3/4	1 1/16	11/16	0.23	0.21	0.234	0.210
3/8	16	16	2	1 1/4	3/4	0.28	0.25	0.287	0.260
7/16	14	14	2 5/16	1 7/16	7/8	0.33	0.30	0.338	0.306
1/2	13	12	2 9/16	1 9/16	1	0.39	0.34	0.393	0.349
9/16	12	12	2 7/8	1 3/4	1 1/8	0.44	0.40	0.446	0.410
5/8	11	11	3	1 13/16	1 3/16	0.49	0.45	0.499	0.460
11/16	11	11	3 1/8	1 7/8	1 1/4	0.56	0.52	0.561	0.522
3/4	10	10	3 1/4	1 15/16	1 5/16	0.61	0.56	0.611	0.568
13/16	10	10	3 3/8	2	1 3/8	0.67	0.62	0.673	0.630
7/8	9	9	3 1/2	2 1/8	1 3/8	0.72	0.67	0.722	0.674
15/16	9	9	3 5/8	2 3/16	1 7/16	0.78	0.73	0.783	0.735
1	8	8	3 3/4	2 1/4	1 1/2	0.82	0.77	0.828	0.774
1 1/8	7	7	4	2 7/16	1 9/16	0.92	0.86	0.928	0.867
1 1/4	7	7	4 1/4	2 9/16	1 11/16	1.04	0.98	1.053	0.992
1 3/8	6	6	4 1/2	2 3/4	1 3/4	1.14	1.07	1.147	1.074
1 1/2	6	6	4 3/4	2 7/8	1 7/8	1.26	1.19	1.272	1.199
1 5/8	5 1/2	5	5	3 1/16	1 15/16	1.37	1.26	1.376	1.266
1 3/4	5	5	5 1/4	3 3/16	2 1/16	1.47	1.38	1.476	1.390
1 7/8	5	4 1/2	5 1/2	3 3/8	2 1/8	1.59	1.46	1.601	1.476
2	4 1/2	4 1/2	5 3/4	3 1/2	2 1/4	1.69	1.59	1.696	1.600

MACHINE TAPS.

Definition and General Appearance. — As the name implies, the machine tap is used for nut tapping in tapping machines, the same as the tapper tap. It has been mentioned that the names of these two taps are often confused. From a manufacturing point of view, however, there is a distinct difference between the two kinds of taps. The tapper tap embodies, in fact, the very simplest design possible for its purpose. It cannot be successfully used in many instances where the machine tap will be satisfactory. The machine tap being threaded and relieved in a different manner is adapted for use on very tough material and for heavy duty.

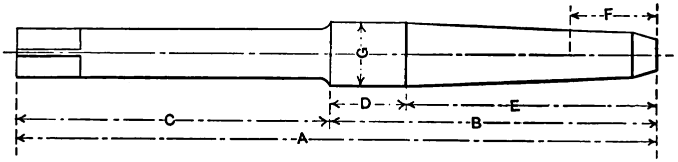

Fig. 91. General Appearance of the Machine Tap

The general appearance of the tap is shown in Fig. 91. It consists of a threaded portion *B*, having a straight part *D* and a chamfered portion *E*, and a shank *C* which is provided with a square, enabling the tap to be securely held in a chuck without danger of slipping. The extreme end of the threaded part is provided with a secondary chamfer, the purpose of which is to facilitate the entering of the tap in the hole in the nut blank. The diameter of the shank should be from 0.01 to 0.02 inch below the root diameter of the thread, the same as for tapper taps, and for the same reason, viz., to permit the threaded nuts to slide freely over the shank.

Turning and Threading. — In turning machine taps the straight portion of the threaded part must be left a certain amount over-size. The amount to be left over the standard diameter before hardening may, for general purposes, be between the limits of 0.0005 inch and 0.0015 inch for sizes not over one-half inch diameter, from 0.001 inch to 0.002 inch for sizes between one-half and 1 inch, from 0.0015 inch to 0.003 inch for sizes between 1 and 2 inches, and from 0.002 inch to 0.0035 inch for sizes between 2 and 3 inches in diameter.

The main difference between tapper taps and machine taps will be found in the threading and relieving of the taps. While the tapper tap is threaded straight for the whole length of the threaded portion, the machine tap is threaded on a taper for a certain distance from the point. The length of this taper thread and also the length of the part chamfered on the top of the thread depend, of course, primarily upon the conditions under which the tap is to be used, the material to be tapped, as well as the length of the nut. When making taps in large quantities, however, whether for the market or for shop use in a large establishment, it is evidently impossible to know beforehand exactly what the taps will be used for, and certain standards must necessarily be adopted. Experienced makers of machine taps adhere to the rule of chamfering from twenty to twenty-five threads on the top of the threads and tapering the root of the thread for a distance equivalent to eight or nine threads from the point. Formulas will be found below which give the length of the chamfered part and the length of the taper thread for various sizes of taps. These dimensions will be so selected as to provide for a length equivalent to at least twenty and eight threads, respectively, on standard thread taps.

While a long taper on a tap is desirable because it diminishes the amount of stock that each tooth of the thread will remove, it has the disadvantage of making the cutting edges toward the point of the tap very broad with a very small space between them. This impairs the cutting quality of the tap, inasmuch as the action is rather that of reaming than of cutting. It is in order to overcome this disadvantage that machine taps are tapered in the angle of the thread for some distance from the point. This makes the width of the tooth smaller and increases the cutting qualities of the tap considerably. This taper in the angle of the thread constitutes one of the principal differences between the machine tap and the tapper tap, the latter being simply chamfered off on the top of the threads. If we analyze the action of the tap when provided with too many cutting edges we will find that the metal is either ground down very fine, and an unnecessary amount of power is consumed in doing this, or some teeth may in fact not cut at all, simply compressing the metal, making the work of removing it still harder for the next cutting edge. On the other hand, a short taper takes away considerable of the chip room necessary for the removed metal. While this may not be of great consequence in an ordinary hand tap, where the motion is slow and the tap is often reversed, it is of great importance in machine taps and tapper taps, where the cutting speed is high and always in one direction. The tap as well as the nut to be threaded is liable to be injured if ample space for the chips to pass away from the cutting edges is not provided.

An ingenious method of decreasing the number of cutting edges, as well as increasing the available chip room, is embodied in the "Echols thread," where every alternate tooth is removed, as shown in Fig. 92. The removal of every other tooth in one of the lands is evidently equivalent to the removal of the teeth of the continuous thread in every other land of the tap. It is therefore obvious that taps provided with this thread must be made with an odd number of lands, so that removing the tooth in alternate lands may result in removing every other tooth in each individual land. If there were an even number of flutes, the cutting away of the teeth in alternate lands would result in removing all the teeth from certain lands and none from the others. Machine taps are often provided with the Echols thread.

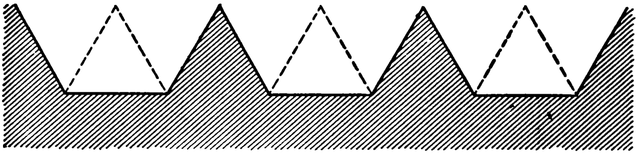

Fig. 92. Interrupted or Echols Thread

Fluting. — In considering the fluting of machine taps we find another difference between these and tapper taps. The former tap requires greater strength on account of its harder service, and at the same time as much chip room as possible. The flute that best fills these requirements may, however, not be the flute commercially possible for the purpose, because the factor of cost is of much importance and unusual or formed shapes of cutters will cost more to make and also require much slower cutting speed. When treating hand taps in preceding chapter two forms of flutes were shown. Another form of flute introduced by the Pratt and Whitney Company for machine taps is shown in Fig. 93. This latter form is to be recommended in all cases where a tap of unusual quality is required. The tap will not break as easily, and the chips are carried off in a more satisfactory manner. A certain kind of flute of late used extensively by certain concerns is the "hook" flute, shown exaggerated in Fig. 94. This flute provides for a keener cutting edge, and is recommended for very tough materials. Some users, however, do not look upon this flute as favorably as others, and opinions vary considerably as to the superiority of this flute, unless the "hook" be made very slight. It is advisable to make the lands fairly narrow as compared with

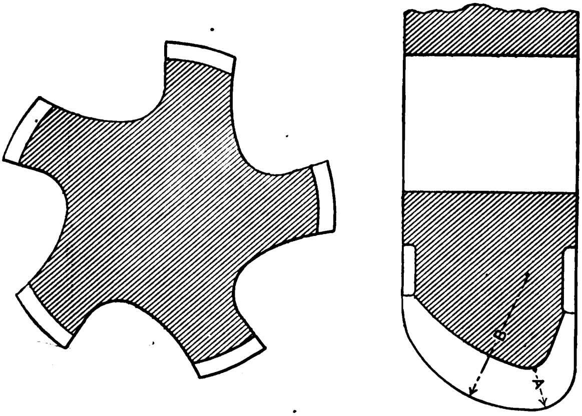

Fig. 93. Form of Flute for Machine Taps, and Fluting Cutter Used

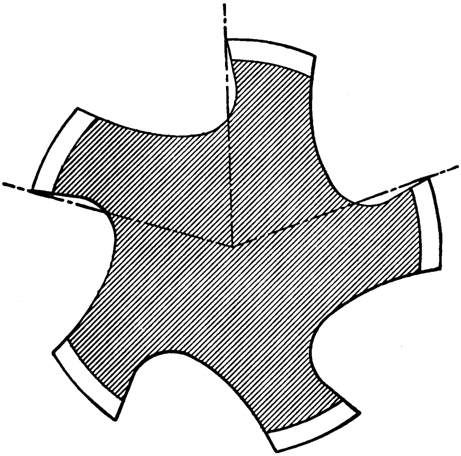

Fig. 94. Hook Flute

hand taps, inasmuch as this will increase the chip room and but slightly decrease the strength, the lands of hand taps being made wide not only to secure strength but to insure good guiding. If provided with a straight-sided flute with a radius in the bottom, which is largely used by manufacturers, this radius may be approximately determined by the equation

$$R = \frac{\sqrt{D}}{6} - \frac{1}{32},$$

R being the radius in the bottom of the flute and D the diameter of the tap.

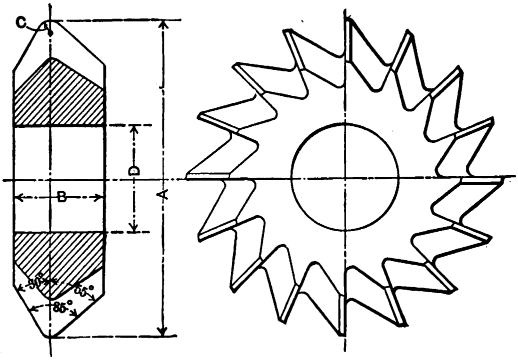

Fig. 95. Regular Fluting Cutter for Machine Taps

Fluting Cutters.—The cutter used for cutting straight-sided flutes is shown in Fig. 95, and is similar to the straight-sided fluting cutter used for hand taps, with the exception of the smaller radius. The inclusive angle between the sides is 85 degrees, 55 degrees on one side and 30 degrees on the other. The thickness of the cutter should be approximately equal to $\frac{3}{8}D + \frac{5}{16}$ inch, if D equals the diameter of the tap to be fluted. The diameter of the cutter depends, of course, not only upon the diameter of the tap to be fluted but also upon the size of the holes in the cutter for the milling-machine arbor. If we assume that we use a three-quarter-inch arbor for the cutters intended for the smaller diameters of taps, say up to and including three-quarter-inch, and one-inch hole in cutters for larger diameters, then

$$\text{Diameter of cutter} = \frac{D}{2} + 2 \text{ inches},$$

in which formula D as before equals the diameter of tap to be fluted.

Table LIII has been figured from these formulas. The figures given are, of course, practical working figures, and are only approximately the values obtained from the formulas whenever these values give dimensions unnecessarily close and in too small fractions. The nearest quarter of an inch is near enough for the dimensions in regard to diameter, and the nearest one-sixteenth or one-eighth inch for thickness. The radius, however, must be given more accurately, as one-thirty-second and even one-sixty-fourth inch makes a considerable difference in this respect, particularly in small taps.

TABLE LIII.

DIMENSIONS OF FLUTING CUTTERS FOR MACHINE TAPS.

(See Fig. 95 for form of cutter.)

Diameter of Tap.	Diameter of Cutter.	Thickness of Cutter.	Radius.	Diameter of Hole in Cutter.
	A	*B*	*C*	*D*
1/4	2	3/8	1/32	3/4
3/8	2 1/4	1/2	1/16	3/4
1/2	2 1/4	1/2	3/32	3/4
5/8	2 1/4	9/16	3/32	3/4
3/4	2 1/4	9/16	1/8	3/4
7/8	2 1/2	5/8	1/8	1
1	2 1/2	11/16	1/8	1
1 1/4	2 1/2	3/4	5/32	1
1 1/2	2 3/4	7/8	5/32	1
1 3/4	2 3/4	1	3/16	1
2	3	1	3/16	1
2 1/4	3	1 1/8	7/32	1
2 1/2	3 1/4	1 1/4	7/32	1
2 3/4	3 1/4	1 3/8	1/4	1
3	3 1/2	1 1/2	1/4	1
3 1/2	3 3/4	1 5/8	9/32	1
4	4	1 3/4	5/16	1

In the case of a fluting cutter such as shown in Fig. 93 the radius A should be about one-eighth and the radius B about one-third of the diameter of the tap for taps with five flutes. For taps with four or six flutes these radii should be slightly larger or smaller, respectively, relative to the diameter of the tap.

The number of flutes for various diameters is given in Table LIV.

TABLE LIV.

NUMBERS OF FLUTES IN MACHINE TAPS FOR VARIOUS DIAMETERS.

Diameter of Tap.	No. of Flutes.	Diameter of Tap.	No. of Flutes.	Diameter of Tap.	No. of Flutes.
$\frac{1}{4}$	4	$\frac{3}{4}$	5	2	5
$\frac{5}{16}$	4	$\frac{7}{8}$	5	$2\frac{1}{4}$	6
$\frac{3}{8}$	4	1	5	$2\frac{1}{2}$	6
$\frac{7}{16}$	5	$1\frac{1}{4}$	5	$2\frac{3}{4}$	6
$\frac{1}{2}$	5	$1\frac{1}{2}$	5	3	6
$\frac{5}{8}$	5	$1\frac{3}{4}$	5	$3\frac{1}{2}$	7

Relief. — Machine taps are relieved as well in the angle of the thread as on the top of the thread for the whole of the chamfered portion, or in other words, the diameter measured over the heel of the thread should be smaller than the diameter measured over the cutting edge; the diameters measured in the angle of the thread at the same respective places should also differ in the same manner. The straight portion of the thread in a machine tap is for sizing only, the same as in the case of a tapper tap, and should as a rule not be relieved. However, what was said about the relief of the straight part of a tapper tap applies here also. When being hardened, machine taps should be drawn to a temper of about 430° F. This temperature should, perhaps, vary for different kinds of steel, but the figure stated will be found a good average.

Dimensions of Machine Taps. — Below are given two sets of empirical formulas for the most important dimensions of machine taps. In the formulas,

A = the total length of the tap,
B = the length of the thread,
C = the length of the shank,
D = the diameter of the tap,
E = the length of the parallel part of the thread,
F = the length of the taper threaded portion.

For taps up to and including two inches in diameter the following formulas will be suitable:

$$\begin{aligned} A &= 5\tfrac{3}{4}\,D + 3\tfrac{7}{8}, \\ B &= 2\tfrac{1}{2}\,D + 1\tfrac{1}{4}, \\ C &= 3\tfrac{1}{4}\,D + 2\tfrac{5}{8}, \\ E &= \tfrac{3}{4}\,D + \tfrac{3}{16}, \\ F &= \frac{3\,D + 1}{4}. \end{aligned}$$

For taps two inches in diameter and larger the formulas will be:

$$\begin{aligned} A &= 3\,D + 9\tfrac{3}{8}, \\ B &= 1\tfrac{1}{2}\,D + 3\tfrac{1}{4}, \\ C &= 1\tfrac{1}{2}\,D + 6\tfrac{1}{8}, \\ E &= \tfrac{3}{8}\,D + \tfrac{15}{16}, \\ F &= \frac{2\,D + 3}{4}. \end{aligned}$$

Table LV is based upon the formulas given. All dimensions are given in convenient working sizes, and are approximate in cases where the formulas give values which cannot be expressed in even fractions, or give fractional values inconvenient for working figures.

The diameter of the extreme end or point of the chamfered portion should be equal to the root diameter less the depth of the thread, or in other words, equal to the full diameter of the tap minus three times the depth of thread.

TABLE LV.

DIMENSIONS OF MACHINE TAPS.

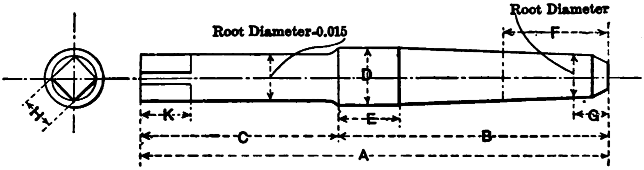

Fig. 96

Diam. of Tap.	Total Length.	Length of Thread.	Length of Shank.	Length of Full Thread.	Length of Taper in Angle.	Length below Root Diam.	Size of Square.	Length of Square.
D	*A*	*B*	*C*	*E*	*F*	*G*	*H*	*K*
1/4	5 5/16	1 7/8	3 7/16	3/8	7/16	3/16	1/8	5/8
5/16	5 5/8	2	3 5/8	7/16	1/2	7/32	5/32	5/8
3/8	6 1/16	2 3/16	3 7/8	1/2	9/16	1/4	3/16	11/16
7/16	6 3/8	2 5/16	4 1/16	1/2	9/16	1/4	1/4	3/4
1/2	6 3/4	2 1/2	4 1/4	9/16	5/8	5/16	9/32	3/4
9/16	7 1/16	2 5/8	4 7/16	5/8	11/16	5/16	5/16	13/16
5/8	7 1/2	2 13/16	4 11/16	11/16	3/4	5/16	11/32	7/8
11/16	7 13/16	2 15/16	4 7/8	11/16	3/4	3/8	13/32	7/8
3/4	8 3/16	3 1/8	5 1/16	3/4	13/16	3/8	7/16	15/16
13/16	8 1/2	3 1/4	5 1/4	13/16	7/8	3/8	1/2	1
7/8	8 15/16	3 7/16	5 1/2	7/8	15/16	7/16	1/2	1
15/16	9 1/4	3 9/16	5 11/16	7/8	15/16	7/16	9/16	1 1/16
1	9 5/8	3 3/4	5 7/8	15/16	1	7/16	5/8	1 1/8
1 1/8	10 3/8	4 1/16	6 5/16	1 1/16	1 1/8	1/2	11/16	1 3/16
1 1/4	11 1/16	4 3/8	6 11/16	1 1/8	1 3/16	9/16	3/4	1 1/4
1 3/8	11 13/16	4 11/16	7 1/8	1 1/4	1 5/16	9/16	13/16	1 3/8
1 1/2	12 1/2	5	7 1/2	1 5/16	1 3/8	5/8	15/16	1 7/16
1 5/8	13 1/4	5 5/16	7 15/16	1 7/16	1 1/2	11/16	1	1 1/2
1 3/4	13 15/16	5 5/8	8 5/16	1 1/2	1 9/16	11/16	1 1/16	1 5/8
1 7/8	14 11/16	5 15/16	8 3/4	1 5/8	1 11/16	3/4	1 1/8	1 11/16
2	15 3/8	6 1/4	9 1/8	1 11/16	1 3/4	3/4	1 1/4	1 3/4
2 1/8	15 3/4	6 7/16	9 5/16	1 3/4	1 13/16	3/4	1 5/16	1 3/4
2 1/4	16 1/8	6 5/8	9 1/2	1 13/16	1 7/8	13/16	1 7/16	1 3/4
2 3/8	16 1/2	6 13/16	9 11/16	1 13/16	1 15/16	13/16	1 1/2	1 13/16
2 1/2	16 7/8	7	9 7/8	1 7/8	2	7/8	1 9/16	1 13/16
2 5/8	17 1/4	7 3/16	10 1/16	1 15/16	2 1/16	7/8	1 11/16	1 13/16
2 3/4	17 5/8	7 3/8	10 1/4	2	2 1/8	7/8	1 3/4	1 13/16
2 7/8	18	7 9/16	10 7/16	2	2 3/16	15/16	1 13/16	1 7/8
3	18 3/8	7 3/4	10 5/8	2 1/16	2 1/4	15/16	1 7/8	1 7/8
3 1/4	19 1/8	8 1/8	11	2 3/16	2 3/8	1	2 1/16	1 7/8
3 1/2	19 7/8	8 1/2	11 3/8	2 1/4	2 1/2	1 1/16	2 1/4	1 15/16
3 3/4	20 5/8	8 7/8	11 3/4	2 3/8	2 5/8	1 1/16	2 7/16	1 15/16
4	21 3/8	9 1/4	12 1/8	2 7/16	2 3/4	1 1/8	2 5/8	2

SCREW MACHINE TAPS.

Definition and General Appearance. — Screw machine taps, as the name indicates, are used for tapping in screw machines. The thread to be cut is usually short and the taps therefore are essentially different from other taps used for nut tapping in machines. It is difficult to establish a standard for this kind of taps, as in many cases the length of the thread, the length of the chamfer, and the diameter of the shank largely depend upon special conditions. When manufactured in quantities, however, either for shop use or for the market, there is a necessity for establishing a standard which will be correct in most cases.

The chamfered end of the thread of these taps is usually very short, as in most cases the tap is required to tap down to the bottom of a hole. A neck is provided between the tap and the shank, as the latter is usually larger in diameter than the tap itself. In regard to the diameter of the shank, manufacturers making a specialty of this kind of taps recommend that this diameter be made to correspond with the outside diameter of a spring screw die for cutting the same size of thread as that for which the screw machine tap is intended. This makes it possible to use the same kind of holders for both tap and die. In Table LVI the diameter of the shank is given in accordance with this recommendation, but it must be understood that this diameter depends in many cases upon the size of the turret or the bushings which the tap shank is to fit.

The shank should be ground true with the thread, as otherwise the resulting thread cut with the taps may be out of true. A flat is milled on the shank for the turret binding screws. This prevents the ground surface of the shank from being spoiled by the burr that would result from binding directly upon the circular surface. The flutes of a screw machine tap are cut with double angle cutters of 85 degrees inclusive angle, 55 degrees on one side and 30 on the other. The thread is relieved only on the top of the thread of the chamfered portion. The straight portion ought not to be relieved, as the screw machine tap must always be reversed at the end of the cut, and if relieved, there would be danger of chips getting in between the back of the threads on the lands of the tap and the threads in the nut, which might result in damaging not only the thread already cut but the tap also.

Dimensions of Screw Machine Taps. — The following formulas may be used for determining the dimensions of screw machine taps for general use. In these formulas,

D = diameter of tap,
A = total length of tap,
B = length of thread,
C = length of neck,
E = length of shank,
G = width of flat on shank.

The dimensions in Table LVI are approximately figured from the following formulas:

$$A = \frac{5D + 20}{8},$$

$$B = \frac{D + 4}{4},$$

$$C = \frac{D + 3}{8},$$

$$E = \frac{2D + 9}{8}.$$

The diameter of the shank cannot be determined by any formula, as it should conform to the diameters most commonly used for spring screw threading dies. The width of the flat, *G*, depends of course upon the diameter of the shank and should be made approximately according to the formula

$$G = \frac{2F + 1}{8}.$$

The dimensions given must, of course, be deviated from in many cases, inasmuch as they would not suit all special purposes but are intended only for taps made for general use.

Screw machine taps should have four flutes in all sizes smaller than $1\frac{1}{2}$ inches, and six flutes for larger diameters.

TABLE LVI.

DIMENSIONS OF SCREW MACHINE TAPS.

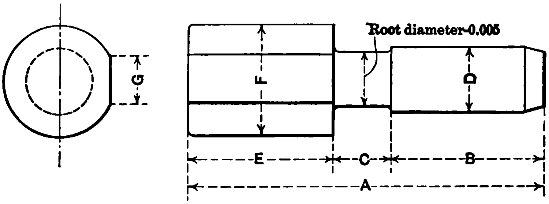

Fig. 97

Diameter of Tap.	Total Length.	Length of Thread.	Length of Neck.	Length of Shank.	Diameter of Shank.	Width of Flat.
D	*A*	*B*	*C*	*E*	*F*	*G*
$\frac{1}{4}$	$2\frac{5}{8}$	$1\frac{1}{16}$	$\frac{3}{8}$	$1\frac{3}{16}$	$\frac{1}{2}$	$\frac{1}{4}$
$\frac{5}{16}$	$2\frac{11}{16}$	$1\frac{1}{16}$	$\frac{7}{16}$	$1\frac{3}{16}$	$\frac{3}{4}$	$\frac{5}{16}$
$\frac{3}{8}$	$2\frac{11}{16}$	$1\frac{1}{16}$	$\frac{7}{16}$	$1\frac{3}{16}$	$\frac{3}{4}$	$\frac{5}{16}$
$\frac{7}{16}$	$2\frac{13}{16}$	$1\frac{1}{8}$	$\frac{7}{16}$	$1\frac{1}{4}$	1	$\frac{3}{8}$
$\frac{1}{2}$	$2\frac{13}{16}$	$1\frac{1}{8}$	$\frac{7}{16}$	$1\frac{1}{4}$	1	$\frac{3}{8}$
$\frac{9}{16}$	$2\frac{13}{16}$	$1\frac{1}{8}$	$\frac{7}{16}$	$1\frac{1}{4}$	$1\frac{1}{4}$	$\frac{7}{16}$
$\frac{5}{8}$	$2\frac{13}{16}$	$1\frac{1}{8}$	$\frac{7}{16}$	$1\frac{1}{4}$	$1\frac{1}{4}$	$\frac{7}{16}$
$\frac{11}{16}$	$2\frac{15}{16}$	$1\frac{3}{16}$	$\frac{7}{16}$	$1\frac{5}{16}$	$1\frac{1}{4}$	$\frac{7}{16}$
$\frac{3}{4}$	$2\frac{15}{16}$	$1\frac{3}{16}$	$\frac{7}{16}$	$1\frac{5}{16}$	$1\frac{1}{4}$	$\frac{7}{16}$
$\frac{13}{16}$	3	$1\frac{3}{16}$	$\frac{1}{2}$	$1\frac{5}{16}$	$1\frac{5}{8}$	$\frac{1}{2}$
$\frac{7}{8}$	3	$1\frac{3}{16}$	$\frac{1}{2}$	$1\frac{5}{16}$	$1\frac{5}{8}$	$\frac{1}{2}$
$\frac{15}{16}$	$3\frac{1}{8}$	$1\frac{1}{4}$	$\frac{1}{2}$	$1\frac{3}{8}$	$1\frac{5}{8}$	$\frac{1}{2}$
1	$3\frac{1}{8}$	$1\frac{1}{4}$	$\frac{1}{2}$	$1\frac{3}{8}$	$1\frac{5}{8}$	$\frac{1}{2}$
$1\frac{1}{8}$	$3\frac{1}{8}$	$1\frac{1}{4}$	$\frac{1}{2}$	$1\frac{3}{8}$	2	$\frac{5}{8}$
$1\frac{1}{4}$	$3\frac{1}{4}$	$1\frac{5}{16}$	$\frac{1}{2}$	$1\frac{7}{16}$	2	$\frac{5}{8}$
$1\frac{3}{8}$	$3\frac{5}{16}$	$1\frac{5}{16}$	$\frac{9}{16}$	$1\frac{7}{16}$	$2\frac{1}{2}$	$\frac{3}{4}$
$1\frac{1}{2}$	$3\frac{7}{16}$	$1\frac{3}{8}$	$\frac{9}{16}$	$1\frac{1}{2}$	$2\frac{1}{2}$	$\frac{3}{4}$
$1\frac{5}{8}$	$3\frac{7}{16}$	$1\frac{3}{8}$	$\frac{9}{16}$	$1\frac{1}{2}$	$2\frac{1}{2}$	$\frac{3}{4}$
$1\frac{3}{4}$	$3\frac{9}{16}$	$1\frac{7}{16}$	$\frac{9}{16}$	$1\frac{9}{16}$	$3\frac{1}{4}$	$\frac{15}{16}$
$1\frac{7}{8}$	$3\frac{5}{8}$	$1\frac{7}{16}$	$\frac{5}{8}$	$1\frac{9}{16}$	$3\frac{1}{4}$	$\frac{15}{16}$
2	$3\frac{3}{4}$	$1\frac{1}{2}$	$\frac{5}{8}$	$1\frac{5}{8}$	$3\frac{1}{4}$	$\frac{15}{16}$

HOBS AND DIE TAPS.

Ordinary Hob Taps.—Hob taps are, as a rule, only intended for final finishing or sizing of the thread in dies. For this reason their construction differs widely from that of ordinary hand taps. They are not primarily intended for actual cutting, being used merely for burring a thread already cut with ordinary taps. Straight hob taps are not relieved either on the top or in the angle of the parallel portion of the thread. Two or at most three threads, however, are chamfered at the point of the tap, and these chamfered threads are relieved on the top of the thread the same as ordinary hand taps. A taper hob, of course, should be slightly relieved on the top as well as in the angle of the thread. The flutes of a hob tap constitute the essential difference between this tap and the hand tap. The number of flutes is greater, and the cutters used are usually regular angular cutters of 50 degrees inclusive angle, 25 degrees on each side, or 45 degrees inclusive angle, 22½ degrees on each side. They should have a very slight round joining the angular sides. The dimensions of ordinary hob taps are made the same as for regular hand taps. These were given in Table XLII in the preceding chapter. The number of flutes will be found from Table LVII of Sellers hobs, the number of flutes being made the same for these latter hobs as for regular ones.

Sellers Hobs.—The Sellers hobs are a special kind of hob taps, differing from the ordinary hob tap in that they are provided with a guide at a point of the thread. The diameter of this guide or pilot is given in Table LVII according to the ordinary method in practice. The other dimensions are given approximately according to formulas below, in which

D = diameter of hob,
A = total length of the hob,
B = length of the pilot,
C = length of the thread,
E = length of the shank,
G = the size of the square, and
H = the length of the square.

Formulas for hobs up to two inches in diameter are:

$$A = 5\tfrac{3}{8}D + 3\tfrac{3}{8},$$
$$B = \frac{5\,D}{2} + \tfrac{5}{8},$$
$$C = \frac{5\,D}{2} + \tfrac{5}{8},$$
$$E = \frac{3\,D + 17}{8},$$
$$G = \tfrac{3}{4} \times \text{diameter of shank},$$
$$H = \frac{3\,D + 5}{8}.$$

For sizes of Sellers hobs two inches in diameter and more, use the formulas:

$$A = 3\tfrac{3}{8}\,D + 7\tfrac{3}{8},$$
$$B = \frac{3\,D}{2} + 2\tfrac{5}{8},$$
$$C = \frac{3\,D}{2} + 2\tfrac{5}{8},$$
$$E = \frac{3\,D + 17}{8},$$
$$G = \tfrac{3}{4} \times \text{diameter of shank},$$
$$H = \frac{3\,D + 5}{8}.$$

The diameter of the shank should be made about one-sixty-fourth smaller than the diameter of the root of the thread. The guide or pilot should always be hardened and ground.

Die Taps. — Die taps are used for cutting the thread in the die in one single operation from the blank and are supposed to be followed by the hob tap. The die tap is provided with a long chamfered portion and a short straight or parallel thread. If to be followed by a hob tap, the parallel portion should be slightly under the standard size so as to leave enough metal for the hob tap to remove to insure the correct size of the die. This difference in size should be not only on the top of the thread but in the angle of the thread as well, so that any inaccuracy in the lead of the thread may be taken care of. On the other hand, it must be remembered that the difference must be very slight, as the hob cannot remove very much stock, having a very short chamfer and very small chip room for the stock removed. If this is not taken into consideration, the dies may be injured in the sizing operation. It may not be out of the way to point out that one should never try to cut the full thread in the die with a hob, as this is purely impossible if any satisfactory results are expected. There are cases known where persons, supposedly well informed as to the use of tools, have bought hob taps for the purpose of cutting dies with these taps in one operation, and after having met with failure in accomplishing this, have complained that the tools supplied were not satisfactory.

Returning to die taps we may say that they are very similar to machine taps and are made in almost exactly the same way. The flutes are cut with the same fluting cutters as are used for machine taps. The die taps are

TABLE LVII.

DIMENSIONS OF SELLERS HOBS.

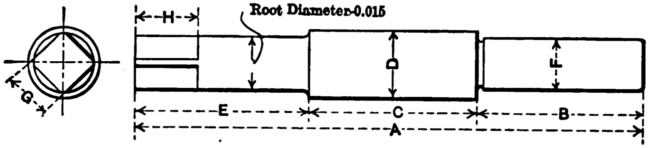

Fig. 98

Diam. of Hob.	Total Length.	Length of Pilot.	Length of Thread.	Length of Shank.	Diam. of Pilot.	Size of Square.	Length of Square.	No. of Flutes.
D	*A*	*B*	*C*	*E*	*F*	*G*	*H*	
$\frac{1}{4}$	$4\frac{3}{4}$	$1\frac{1}{4}$	$1\frac{1}{4}$	$2\frac{1}{4}$	$\frac{3}{16}$	$\frac{1}{8}$	$\frac{3}{4}$	6
$\frac{5}{16}$	5	$1\frac{3}{8}$	$1\frac{3}{8}$	$2\frac{1}{4}$	$\frac{1}{4}$	$\frac{5}{32}$	$\frac{3}{4}$	6
$\frac{3}{8}$	$5\frac{3}{8}$	$1\frac{9}{16}$	$1\frac{9}{16}$	$2\frac{1}{4}$	$\frac{5}{16}$	$\frac{3}{16}$	$\frac{3}{4}$	6
$\frac{7}{16}$	$5\frac{11}{16}$	$1\frac{11}{16}$	$1\frac{11}{16}$	$2\frac{5}{16}$	$\frac{5}{16}$	$\frac{1}{4}$	$\frac{13}{16}$	6
$\frac{1}{2}$	$6\frac{1}{16}$	$1\frac{7}{8}$	$1\frac{7}{8}$	$2\frac{5}{16}$	$\frac{3}{8}$	$\frac{9}{32}$	$\frac{13}{16}$	8
$\frac{9}{16}$	$6\frac{5}{16}$	2	2	$2\frac{5}{16}$	$\frac{3}{8}$	$\frac{5}{16}$	$\frac{13}{16}$	8
$\frac{5}{8}$	$6\frac{3}{4}$	$2\frac{3}{16}$	$2\frac{3}{16}$	$2\frac{3}{8}$	$\frac{1}{2}$	$\frac{11}{32}$	$\frac{7}{8}$	8
$\frac{11}{16}$	7	$2\frac{5}{16}$	$2\frac{5}{16}$	$2\frac{3}{8}$	$\frac{1}{2}$	$\frac{13}{32}$	$\frac{7}{8}$	8
$\frac{3}{4}$	$7\frac{3}{8}$	$2\frac{1}{2}$	$2\frac{1}{2}$	$2\frac{3}{8}$	$\frac{1}{2}$	$\frac{7}{16}$	$\frac{7}{8}$	8
$\frac{13}{16}$	$7\frac{11}{16}$	$2\frac{5}{8}$	$2\frac{5}{8}$	$2\frac{7}{16}$	$\frac{1}{2}$	$\frac{1}{2}$	$\frac{15}{16}$	8
$\frac{7}{8}$	$8\frac{1}{16}$	$2\frac{13}{16}$	$2\frac{13}{16}$	$2\frac{7}{16}$	$\frac{11}{16}$	$\frac{1}{2}$	$\frac{15}{16}$	8
$\frac{15}{16}$	$8\frac{3}{8}$	$2\frac{15}{16}$	$2\frac{15}{16}$	$2\frac{1}{2}$	$\frac{11}{16}$	$\frac{9}{16}$	1	10
1	$8\frac{3}{4}$	$3\frac{1}{8}$	$3\frac{1}{8}$	$2\frac{1}{2}$	$\frac{11}{16}$	$\frac{5}{8}$	1	10
$1\frac{1}{8}$	$9\frac{7}{16}$	$3\frac{7}{16}$	$3\frac{7}{16}$	$2\frac{9}{16}$	$\frac{7}{8}$	$\frac{11}{16}$	$1\frac{1}{16}$	10
$1\frac{1}{4}$	$10\frac{1}{16}$	$3\frac{3}{4}$	$3\frac{3}{4}$	$2\frac{9}{16}$	$\frac{7}{8}$	$\frac{3}{4}$	$1\frac{1}{16}$	10
$1\frac{3}{8}$	$10\frac{3}{4}$	$4\frac{1}{16}$	$4\frac{1}{16}$	$2\frac{5}{8}$	$1\frac{1}{16}$	$\frac{13}{16}$	$1\frac{1}{8}$	10
$1\frac{1}{2}$	$11\frac{7}{16}$	$4\frac{3}{8}$	$4\frac{3}{8}$	$2\frac{11}{16}$	$1\frac{1}{16}$	$\frac{15}{16}$	$1\frac{3}{16}$	10
$1\frac{5}{8}$	$12\frac{1}{8}$	$4\frac{11}{16}$	$4\frac{11}{16}$	$2\frac{3}{4}$	$1\frac{5}{16}$	1	$1\frac{1}{4}$	12
$1\frac{3}{4}$	$12\frac{3}{4}$	5	5	$2\frac{3}{4}$	$1\frac{5}{16}$	$1\frac{1}{16}$	$1\frac{1}{4}$	12
$1\frac{7}{8}$	$13\frac{7}{16}$	$5\frac{5}{16}$	$5\frac{5}{16}$	$2\frac{13}{16}$	$1\frac{1}{2}$	$1\frac{1}{8}$	$1\frac{5}{16}$	12
2	$14\frac{1}{8}$	$5\frac{5}{8}$	$5\frac{5}{8}$	$2\frac{7}{8}$	$1\frac{1}{2}$	$1\frac{1}{4}$	$1\frac{3}{8}$	12
$2\frac{1}{8}$	$14\frac{9}{16}$	$5\frac{13}{16}$	$5\frac{13}{16}$	$2\frac{15}{16}$	$1\frac{1}{2}$	$1\frac{5}{16}$	$1\frac{7}{16}$	12
$2\frac{1}{4}$	$14\frac{15}{16}$	6	6	$2\frac{15}{16}$	$1\frac{1}{2}$	$1\frac{7}{16}$	$1\frac{7}{16}$	12
$2\frac{3}{8}$	$15\frac{3}{8}$	$6\frac{3}{16}$	$6\frac{3}{16}$	3	$1\frac{1}{2}$	$1\frac{1}{2}$	$1\frac{1}{2}$	12
$2\frac{1}{2}$	$15\frac{13}{16}$	$6\frac{3}{8}$	$6\frac{3}{8}$	$3\frac{1}{16}$	$1\frac{1}{2}$	$1\frac{9}{16}$	$1\frac{9}{16}$	12
$2\frac{5}{8}$	$16\frac{1}{4}$	$6\frac{9}{16}$	$6\frac{9}{16}$	$3\frac{1}{8}$	$1\frac{1}{2}$	$1\frac{11}{16}$	$1\frac{5}{8}$	14
$2\frac{3}{4}$	$16\frac{5}{8}$	$6\frac{3}{4}$	$6\frac{3}{4}$	$3\frac{1}{8}$	$1\frac{1}{2}$	$1\frac{3}{4}$	$1\frac{5}{8}$	14
$2\frac{7}{8}$	$17\frac{1}{16}$	$6\frac{15}{16}$	$6\frac{15}{16}$	$3\frac{3}{16}$	$1\frac{1}{2}$	$1\frac{13}{16}$	$1\frac{11}{16}$	14
3	$17\frac{1}{2}$	$7\frac{1}{8}$	$7\frac{1}{8}$	$3\frac{1}{4}$	$1\frac{1}{2}$	$1\frac{7}{8}$	$1\frac{3}{4}$	14
$3\frac{1}{4}$	$18\frac{5}{16}$	$7\frac{1}{2}$	$7\frac{1}{2}$	$3\frac{5}{16}$	$2\frac{3}{4}$	$2\frac{1}{16}$	$1\frac{13}{16}$	16
$3\frac{1}{2}$	$19\frac{3}{16}$	$7\frac{7}{8}$	$7\frac{7}{8}$	$3\frac{7}{16}$	$2\frac{3}{4}$	$2\frac{1}{4}$	$1\frac{15}{16}$	16
$3\frac{3}{4}$	20	$8\frac{1}{4}$	$8\frac{1}{4}$	$3\frac{1}{2}$	$2\frac{3}{4}$	$2\frac{7}{16}$	2	16
4	$20\frac{7}{8}$	$8\frac{5}{8}$	$8\frac{5}{8}$	$3\frac{5}{8}$	$2\frac{3}{4}$	$2\frac{5}{8}$	$2\frac{1}{8}$	16

relieved both on the top of the thread and in the angle of the thread on the chamfered portion, and they are threaded on a taper for a short distance from the point of the tap the same as machine taps. On the end of the die tap a straight pilot may be provided with advantage. This will help in guiding the tap straight when starting the thread. Some manufacturers do not provide their taps with this straight pilot; they simply chamfer them all the way down to the point, but make the diameter of point below the root diameter of the thread for a distance equivalent to the length of the guide. This, of course, serves no other purpose than to aid in facilitating the point of the tap to easily enter the hole in the die blank but does not guide or start the tap straight. When these taps are to be used for threading dies which have already been provided with clearance holes, they should be fluted with somewhat narrower flutes than otherwise, leaving the lands fairly wide, and preferably be given a greater number of flutes than usual. This will permit the tap to pass through the die without deviating from its true course.

Dimensions of Die Taps. — Table LVIII gives complete dimensions for these taps. The dimensions are figured from the formulas below. In these formulas,

D = diameter of the thread,
A = total length of die tap,
B = length of the thread,
C = length of the shank,
E = length of the straight thread,
F = length of the pilot,
G = size of the square, and
H = length of the square.

TABLE LVIII.

DIMENSIONS OF TAPER DIE TAPS.

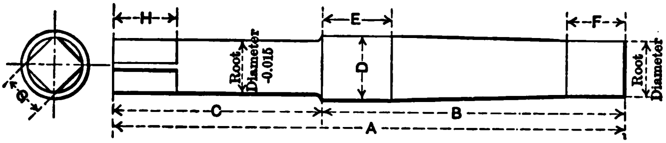

Fig. 99

Diam. of Tap.	Total Length.	Length of Thread.	Length of Shank.	Length of Straight Thread.	Length of Pilot.	Size of Square.	Length of Square.	No. of Flutes.
D	*A*	*B*	*C*	*E*	*F*	*G*	*H*	
$\frac{1}{4}$	$5\frac{3}{16}$	$2\frac{13}{16}$	$2\frac{3}{8}$	$\frac{1}{4}$	$\frac{3}{8}$	$\frac{1}{8}$	$\frac{9}{16}$	5
$\frac{5}{16}$	$5\frac{1}{2}$	$3\frac{1}{16}$	$2\frac{7}{16}$	$\frac{5}{16}$	$\frac{7}{16}$	$\frac{5}{32}$	$\frac{5}{8}$	5
$\frac{3}{8}$	$5\frac{7}{8}$	$3\frac{5}{16}$	$2\frac{9}{16}$	$\frac{3}{8}$	$\frac{1}{2}$	$\frac{3}{16}$	$\frac{11}{16}$	5
$\frac{7}{16}$	$6\frac{1}{4}$	$3\frac{5}{8}$	$2\frac{5}{8}$	$\frac{7}{16}$	$\frac{9}{16}$	$\frac{1}{4}$	$\frac{11}{16}$	5
$\frac{1}{2}$	$6\frac{5}{8}$	$3\frac{7}{8}$	$2\frac{3}{4}$	$\frac{1}{2}$	$\frac{5}{8}$	$\frac{9}{32}$	$\frac{3}{4}$	5
$\frac{9}{16}$	$6\frac{15}{16}$	$4\frac{1}{8}$	$2\frac{13}{16}$	$\frac{9}{16}$	$\frac{5}{8}$	$\frac{5}{16}$	$\frac{13}{16}$	5
$\frac{5}{8}$	$7\frac{5}{16}$	$4\frac{3}{8}$	$2\frac{15}{16}$	$\frac{5}{8}$	$\frac{11}{16}$	$\frac{11}{32}$	$\frac{13}{16}$	5
$\frac{11}{16}$	$7\frac{11}{16}$	$4\frac{11}{16}$	3	$\frac{11}{16}$	$\frac{11}{16}$	$\frac{13}{32}$	$\frac{7}{8}$	6
$\frac{3}{4}$	$8\frac{1}{16}$	$4\frac{15}{16}$	$3\frac{1}{8}$	$\frac{3}{4}$	$\frac{3}{4}$	$\frac{7}{16}$	$\frac{7}{8}$	6
$\frac{13}{16}$	$8\frac{3}{8}$	$5\frac{3}{16}$	$3\frac{3}{16}$	$\frac{13}{16}$	$\frac{3}{4}$	$\frac{1}{2}$	$\frac{15}{16}$	6
$\frac{7}{8}$	$8\frac{3}{4}$	$5\frac{7}{16}$	$3\frac{5}{16}$	$\frac{7}{8}$	$\frac{13}{16}$	$\frac{1}{2}$	1	6
$\frac{15}{16}$	$9\frac{1}{8}$	$5\frac{3}{4}$	$3\frac{3}{8}$	$\frac{15}{16}$	$\frac{13}{16}$	$\frac{9}{16}$	1	6
1	$9\frac{1}{2}$	6	$3\frac{1}{2}$	1	$\frac{7}{8}$	$\frac{5}{8}$	$1\frac{1}{16}$	6
$1\frac{1}{8}$	$10\frac{3}{16}$	$6\frac{1}{2}$	$3\frac{11}{16}$	$1\frac{1}{8}$	$\frac{15}{16}$	$\frac{11}{16}$	$1\frac{1}{8}$	6
$1\frac{1}{4}$	$10\frac{15}{16}$	$7\frac{1}{16}$	$3\frac{7}{8}$	$1\frac{1}{4}$	1	$\frac{3}{4}$	$1\frac{3}{16}$	7
$1\frac{3}{8}$	$11\frac{5}{8}$	$7\frac{9}{16}$	$4\frac{1}{16}$	$1\frac{3}{8}$	$1\frac{1}{16}$	$\frac{13}{16}$	$1\frac{5}{16}$	7
$1\frac{1}{2}$	$12\frac{3}{8}$	$8\frac{1}{8}$	$4\frac{1}{4}$	$1\frac{1}{2}$	$1\frac{1}{8}$	$\frac{15}{16}$	$1\frac{3}{8}$	7
$1\frac{5}{8}$	$13\frac{1}{16}$	$8\frac{5}{8}$	$4\frac{7}{16}$	$1\frac{5}{8}$	$1\frac{1}{8}$	1	$1\frac{7}{16}$	7
$1\frac{3}{4}$	$13\frac{13}{16}$	$9\frac{3}{16}$	$4\frac{5}{8}$	$1\frac{3}{4}$	$1\frac{3}{16}$	$1\frac{1}{16}$	$1\frac{1}{2}$	8
$1\frac{7}{8}$	$14\frac{1}{2}$	$9\frac{11}{16}$	$4\frac{13}{16}$	$1\frac{7}{8}$	$1\frac{1}{4}$	$1\frac{1}{8}$	$1\frac{5}{8}$	8
2	$15\frac{1}{4}$	$10\frac{1}{4}$	5	2	$1\frac{5}{16}$	$1\frac{1}{4}$	$1\frac{11}{16}$	8
$2\frac{1}{8}$	$15\frac{15}{16}$	$10\frac{3}{4}$	$5\frac{3}{16}$	$2\frac{1}{8}$	$1\frac{5}{16}$	$1\frac{5}{16}$	$1\frac{3}{4}$	8
$2\frac{1}{4}$	$16\frac{11}{16}$	$11\frac{5}{16}$	$5\frac{3}{8}$	$2\frac{1}{4}$	$1\frac{3}{8}$	$1\frac{7}{16}$	$1\frac{13}{16}$	9
$2\frac{3}{8}$	$17\frac{3}{8}$	$11\frac{13}{16}$	$5\frac{9}{16}$	$2\frac{3}{8}$	$1\frac{7}{16}$	$1\frac{1}{2}$	$1\frac{15}{16}$	9
$2\frac{1}{2}$	$18\frac{1}{8}$	$12\frac{3}{8}$	$5\frac{3}{4}$	$2\frac{1}{2}$	$1\frac{1}{2}$	$1\frac{9}{16}$	2	9
$2\frac{5}{8}$	$18\frac{9}{16}$	$12\frac{5}{8}$	$5\frac{15}{16}$	$2\frac{5}{8}$	$1\frac{1}{2}$	$1\frac{11}{16}$	2	9
$2\frac{3}{4}$	19	$12\frac{7}{8}$	$6\frac{1}{8}$	$2\frac{3}{4}$	$1\frac{9}{16}$	$1\frac{3}{4}$	2	10
$2\frac{7}{8}$	$19\frac{7}{16}$	$13\frac{1}{8}$	$6\frac{5}{16}$	$2\frac{7}{8}$	$1\frac{5}{8}$	$1\frac{13}{16}$	$2\frac{1}{16}$	10
3	$19\frac{7}{8}$	$13\frac{3}{8}$	$6\frac{1}{2}$	3	$1\frac{5}{8}$	$1\frac{7}{8}$	$2\frac{1}{16}$	10
$3\frac{1}{4}$	$20\frac{3}{4}$	$13\frac{7}{8}$	$6\frac{7}{8}$	$3\frac{1}{4}$	$1\frac{11}{16}$	$2\frac{1}{16}$	$2\frac{1}{16}$	10
$3\frac{1}{2}$	$21\frac{5}{8}$	$14\frac{3}{8}$	$7\frac{1}{4}$	$3\frac{1}{2}$	$1\frac{3}{4}$	$2\frac{1}{4}$	$2\frac{1}{8}$	10
$3\frac{3}{4}$	$22\frac{1}{2}$	$14\frac{7}{8}$	$7\frac{5}{8}$	$3\frac{3}{4}$	$1\frac{13}{16}$	$2\frac{7}{16}$	$2\frac{1}{8}$	10
4	$23\frac{3}{8}$	$15\frac{3}{8}$	8	4	$1\frac{7}{8}$	$2\frac{5}{8}$	$2\frac{3}{16}$	10

For diameters below $2\frac{1}{2}$ inches the following formulas are used:

$$A = 5\tfrac{3}{4}\,D + 3\tfrac{3}{4},$$
$$B = 4\tfrac{1}{4}\,D + 1\tfrac{3}{4},$$
$$C = 1\tfrac{1}{2}\,D + 2,$$
$$E = D,$$
$$F = \sqrt{D} - \tfrac{1}{8},$$
$$G = \tfrac{3}{4} \times \text{the diameter of shank},$$
$$H = \tfrac{5}{8}\,D + \tfrac{7}{16}.$$

For sizes $2\frac{1}{2}$ inches and larger the following formulas are used:

$$A = 3\tfrac{1}{2}\,D + 9\tfrac{3}{8},$$
$$B = 2\,D + 7\tfrac{3}{8},$$
$$C = 1\tfrac{1}{2}\,D + 2,$$
$$E = D,$$
$$F = \sqrt{D} - \tfrac{1}{8},$$
$$G = \tfrac{3}{4} \times \text{diameter of shank},$$
$$H = \tfrac{1}{8}\,D + 1\tfrac{1}{16}.$$

It must be plainly understood that the formulas given are for guidance only, and that no hard and fast rule

TABLE LIX.

LIMIT OF OVER-SIZE IN DIAMETER OF HOBS AND DIE TAPS AFTER HARDENING.

Diameter of Tap. Inches.	Limit of Oversize.	Diameter of Tap. Inches.	Limit of Oversize.	Diameter of Tap. Inches.	Limit of Oversize.
$\frac{1}{16}$	0.00025	$\frac{7}{8}$	0.002	$2\frac{3}{4}$	0.003
$\frac{1}{8}$	0.0005	1	0.00225	3	0.003
$\frac{1}{4}$	0.00075	$1\frac{1}{4}$	0.00225	$3\frac{1}{4}$	0.0035
$\frac{3}{8}$	0.001	$1\frac{1}{2}$	0.0025	$3\frac{1}{2}$	0.0035
$\frac{1}{2}$	0.00125	$1\frac{3}{4}$	0.0025	$3\frac{3}{4}$	0.004
$\frac{5}{8}$	0.0015	2	0.00275	4	0.004
$\frac{3}{4}$	0.00175	$2\frac{1}{4}$	0.00275	....	....

could be made in regard to the dimensions. Formulas are given for so insignificant a dimension as the length of the squared portion of the shank only in order to facilitate a systematic arrangement of the values in the tables.

The limits of over-size in diameter permissible in hobs and die taps after hardening are given in Table LIX.

Hobs and die taps are made to somewhat closer limits in regard to the excess diameter. The figures given in Table LIX should not be exceeded under any circumstances, as a hob with an error in lead so great as to require a larger excess in diameter than given should not pass inspection.

CHAPTER VI.

TAPER TAPS. — MISCELLANEOUS TAPS.

Taper Taps in General.

Taper taps, if the expression be properly understood, are taps which have the diameter of the thread nearest the shank larger than the diameter of the full thread at the point, the intermediate portion being formed by the gradual taper from one end of the thread to the other, as has already been said when defining different kinds of taps in Chapter III. It may be well to call attention again to this proper meaning of the expression "taper tap" because of the fact that the first tap in a set of hand taps is commonly but not properly referred to as a taper tap. As this expression is used to designate two widely different things, and as its common usage as the name of the first tap in a set of hand taps prevents any possible change, it is always well, when speaking of taper taps, to state which of the two meanings is referred to in any particular case. In the present discussion we are referring to the taps properly termed taper taps, that is, those with the diameter of the full thread at the point smaller than the diameter of the thread at the end nearest the shank as shown exaggerated in Fig. 100.

There are three particular points to take into consideration when making taper taps. In the first place, the threading tool must be presented to the tap at right angles to the axis of the tap, and not at right angles to its tapered surface, unless the tool is specially made for taper threading of taps with a definite taper; in the second place, taper taps should, if possible, be turned on lathes provided with taper attachments, and not by setting over the tail-stock of the lathe; and, finally, proper relief should in all cases be given a taper tap. The first of these questions was treated at length in the chapter on threading tools, under the heading "Cutting Taper Threaded Taps with Chasers." The second and third questions will now be taken up.

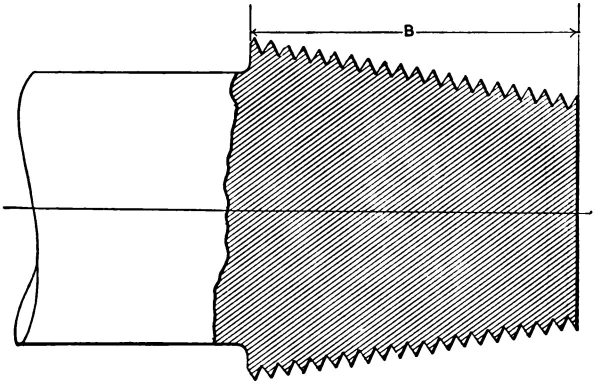

Fig. 100. General Appearance of Taper Taps

Effect of Setting Over Tail-Stock when Threading Taper Taps. — The second consideration of importance when threading taper taps is that, if possible, the thread should not be cut by means of setting over the tail-stock but by means of a taper attachment. If the old method of setting over the tail-stock is used, two errors will be introduced, and these errors will increase as the taper of the taps increases. The first error consists in the pitch of the thread becoming finer than the standard, which is readily seen by referring to Fig. 101. The length of the work shown between the centers of the lathe is *a* if measured along the axis of the work. If measured along the tapered surface the length is b; but $b = \frac{a}{\cos v}$. If the piece is threaded with a certain number of threads per inch, c, the number of threads when threading by means of a taper attachment would be $a \times c$; but if the threading is done with the tail-stock set over, as shown by the dotted lines, the number of threads would be $\frac{a}{\cos v} \times c$, or a greater number of threads, and consequently a finer pitch than in the first case.

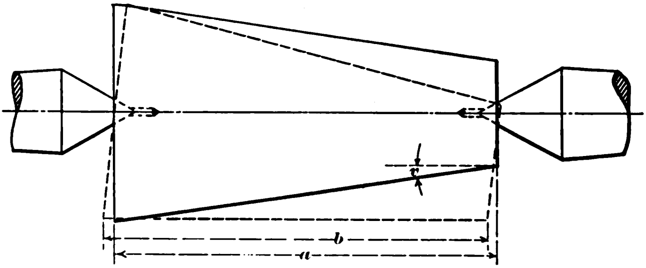

Fig. 101. Effect of Setting Over Tail-Stock when Threading Taper Taps

An example will plainly demonstrate the case. Let the length a, measured parallel to the axis, be 12 inches. Assume that we wish to cut 10 threads per inch and that the angle v is 8 degrees. The number of threads on the whole length of the piece, when cut in a correct way by means of a taper attachment, will be 120. Now, the length b, or the length of the piece measured parallel to the outside, is $\frac{12}{\cos 8^\circ} = 12.121$, or $12\frac{1}{8}$ inches approximately. In this length we would get $121\frac{1}{4}$ threads instead of 120. It is thus evident that for steep tapers the difference is quite considerable and cannot be overlooked.

"Drunken" Thread. — The second error due to setting over the tail-stock when cutting a taper thread is that the thread, instead of becoming a true, continuous helix,

becomes "drunken." An exaggerated drunken thread is shown in Fig. 102. The drunken thread is due to the fact that in taper turning with the tail-stock set over, the work does not turn with a uniform angular velocity, while the cutting tool is advancing along the work longitudinally with a uniform linear velocity. The change in the pitch and the irregularity of the thread are so small as to be imperceptible to the eye if the taper is slight, but as the tapers increase to say one-half inch or three-quarters inch per foot the errors become pronounced. While the setting over of the tail-stock for cutting taper threads should be discouraged as much as possible, in cases where it is necessary the evil effects of the method may be partly overcome, at least so far as the cutting qualities of the taps are concerned, by relieving the threads liberally. Obviously this will not correct the errors of incorrect pitch and imperfect helix of the thread, but it will cause the tap to cut freely.

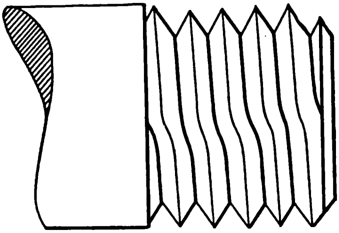

Fig. 102. Exaggerated Appearance of Drunken Thread

Amount of Error Due to Setting Over the Tail-Stock. — In Table LX figures are given stating the amount a tap will be *short in the lead in one inch* for various tapers if threaded with the tail-stock set over. When used in connection with taps and reamers, "amount of taper" is meant to express the *difference in diameter per foot of length* measured along the center line or axis of the tool. From the table given it is easily seen whether the inaccuracy produced will be of consequence in a particular case or not. The amount of the error in one inch equals

$$1 - \cos v,$$

if v is figured from the formula

$$\tan v = \frac{t}{2 \times 12},$$

in which formula t is the taper per foot of the piece to be threaded.

A numerical example will make the formulas more easily understood. Suppose the taper per foot of a particular piece of work is five-eighths inch. The angle v is then first determined:

$$\tan v = \frac{0.625}{2 \times 12} = 0.026,$$

$$v = 1^\circ\ 30'.$$

The amount the lead of the thread will be short in one inch if threaded with the tail-stock set over equals

$$1 - \cos 1^\circ\ 30' = 0.00034,$$

or about 0.004 per foot. Being a fairly small taper we see that the amount of the error is comparatively slight. If the taper is increased, however, the error will soon assume such proportions as to be negligible only in very rough work.

TABLE LX.

AMOUNT OF SHORTAGE IN LEAD IN ONE INCH OF TAPS THREADED BY SETTING OVER THE TAIL-STOCK.

Taper per Foot.	Error in Lead per Inch.	Taper per Foot.	Error in Lead per Inch.
$\frac{1}{8}$	0.00001	$1\frac{1}{2}$	0.0019
$\frac{1}{4}$	0.00005	$1\frac{3}{4}$	0.0026
$\frac{3}{8}$	0.00012	2	0.0035
$\frac{1}{2}$	0.00022	$2\frac{1}{2}$	0.0054
$\frac{5}{8}$	0.00034	3	0.0078
$\frac{3}{4}$	0.00048	$3\frac{1}{2}$	0.0105
1	0.0009	4	0.0137
$1\frac{1}{4}$	0.0014	....	....

Relief of Taper Taps. — The third and perhaps the main consideration in regard to making taper taps is the question of a proper relief. This question has caused much perplexity, particularly in the case of taps with steep tapers. It is evident that a taper tap not relieved, either on the top or in the angle of the thread, will refuse to cut altogether, or if forced through a hole will either leave a very rough and irregular thread or break off its own teeth. This depends upon that, as the tap is continuously tapering upward, the heels of the teeth are always located in a circular section of a larger diameter than the cutting edges of the corresponding teeth. Consequently, if forced to cut a thread, the tap, if not relieved, will squeeze the metal back of the cutting edge in order to find room for the increasing diameter. While the edge cuts, the space produced by the cutting point of the thread is not large enough for the increasing diameter of the part of the thread immediately following. On account of this it is imperative that taper taps be relieved the full length of the thread, on the top as well as in the angle of the thread, for the full width of the land. The relief should also be greater on the side *D* than on the side *E* of the thread. (See Fig. 103.) This will lessen the friction and the resistance while cutting a thread, inasmuch as it is obvious that the greater pressure on the thread of the tap created by the cutting process comes on the side *D*. Thus, if this side is properly relieved, so as to permit only

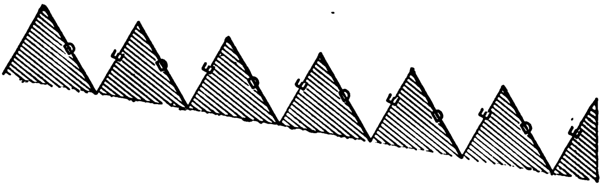

Fig. 103. Relief of Taper Taps

the cutting edge to come in contact with the material to be cut, the friction is reduced to the smallest possible amount at the same time as the keenness of the cutting edge is increased.

With the exception of the previous remarks there is nothing to be added concerning taper taps which has not already been discussed in relation to straight taps. As a rule there is not the necessity for the extreme accuracy in taper taps that is sometimes expected in hand taps, because, with incidental exceptions, of course, taper taps are usually employed on work of rougher character. Besides, being tapered, there is never any requirement for a working fit between the stud and the nut, and taper taps are used mainly for tapping holes where a steam- or air-tight fit is required.

PIPE TAPS.

The most common of all taper taps is the pipe tap. The number and form of threads for this tap were given in Chapter I. The pipe tap tapers three-quarters inch per foot, or one-sixteenth inch per inch measured along its axis. The taps are known by the nominal size of the pipe for which they are intended. Consequently a pipe tap is a great deal larger than the size by which it is designated. The largest diameter of a half-inch pipe tap, as seen from Table LXII, is 0.887 inch.

Fluting. — Pipe taps are fluted with the same kind of cutters as are used for hand taps. As there is considerable difference in the manner in which a hand tap and a pipe tap cut, there is also some difference in regard to the required chip room. In the case of a hand tap, as soon as the thread has been cut by the chamfered portion, the straight part of the thread does not cut or produce any chips. The pipe tap, again, being tapered, is constantly cutting, no matter which part of the tap is in contact with the work, and therefore there is necessity for large chip room, and the flutes should be made as deep as possible without impairing the strength of the tap.

The number of flutes for pipe taps may be approximately determined by the formula

$$N = 1.75A + 3,$$

in which N is the number of flutes and A the diameter of the tap at the size line.

This formula gives the following number of flutes for sizes up to 4-inch pipe tap.

Nominal Size of Tap.	Number of Flutes.	Nominal Size of Tap.	Number of Flutes.
⅛	4	1½	6
¼	4	2	7
⅜	4	2½	8
½	4	3	9
¾	5	3½	10
1	5	4	11
1¼	6	....	....

The formula given for the number of flutes makes the distance from cutting edge to cutting edge at the size line larger as the sizes grow larger, thereby making possible deeper flutes in the larger sizes.

Testing Lead of Taper Taps. — In testing or inspecting the lead of taper taps, it must be remembered that the correct lead should be on a line parallel to the axis of the tap, and the lead of the thread cannot be measured in the same manner as with straight taps, unless due allowance is made for the differences in length along the axis and the tapered surface. In Table LXI the values are given which should be measured along the tapered surface to correspond to one inch along the axis for different tapers. In other words, if a tap is tapered three-quarters inch per foot, and is provided with 8 threads per inch, the distance covering 8 threads on the surface of the tap is not one inch but 1.0005 inch, as seen from the table opposite three-quarters taper per foot. If the lead of the thread is tested by comparing it with a standard plug, this need not, of course, be taken into consideration, as then any device for comparing the lead of straight taps is equally applicable to taper taps.

TABLE LXI.

AMOUNT MEASURED ALONG THE TAPERED SURFACE CORRESPONDING TO 1 INCH ALONG THE AXIS.

Taper per Foot.	Amount Measured along the Tapered Surface Corresponding to 1 Inch along the Axis.	Taper per Foot.	Amount Measured along the Tapered Surface Corresponding to 1 Inch along the Axis.
1/8	1.0000	1 1/2	1.002
1/4	1.0001	1 3/4	1.0025
3/8	1.0001	2	1.0035
1/2	1.0002	2 1/2	1.0055
5/8	1.0003	3	1.008
3/4	1.0005	3 1/2	1.011
1	1.0009	4	1.014
1 1/4	1.0015	....	....

The distance on the tapered surface corresponding to one inch along the axis is $\frac{1}{\cos v}$, if v is determined by the formula

$$\tan v = \frac{t}{2 \times 12},$$

where t is the taper per foot.

Thus, if a tap tapers $1\frac{1}{4}$ inches per foot and has 8 threads to the inch, if 16 threads were measured at the surface of the taper, the length, if the lead be correct, should not be 2 inches but 2.003 inches, which we find from

$$\tan v = \frac{1.25}{2 \times 12} = 0.0521;$$

$$v = 3° \text{ (approximately), and } \frac{1}{\cos 3°} = 1.0014;$$

$$2 \times 1.0014 = 2.003 \text{ (approximately).}$$

In Tables LX and LXI figures have been given for tapers as steep as 4 inches per foot. Of course, such steep tapers are very seldom used.

Dimensions of Pipe Taps. — The dimensions of pipe taps are given in Table LXII. Referring to Fig. 105, a diameter *A* is given at the distance *B* from the point of the tap. This diameter is the essential diametrical measure of a pipe tap, and the circular line which may be imagined to be drawn around the tap at this place is termed the size line. The two smallest sizes are provided with a neck between the threaded part and the shank. On the remaining sizes the shank is made small enough to come below the root diameter of the thread, and a neck is therefore unnecessary.

As pipe taps must be made according to the established manufacturing standard, formulas for the dimensions cannot be given, excepting for those measurements which are unessential, like the dimensions for the shank and square; but Table LXII gives all necessary information in regard to all standard sizes, and formulas, even if they could be given, would consequently be superfluous.

Limits of Accuracy. — The accuracy usually demanded of taper pipe taps in regard to the exact location of the size line is given below. The method of testing or measuring taper taps in order to insure that they are within the permitted limits of variation in this respect is by means of a ring gauge, as shown in Fig. 104, the diameter *L* at the large end of which is the dimension at the size line; the diameter *S* at the small end of the hole is the diameter at the point of the tap, and the length *M* of the ring gauge equals the dimension *B* in Fig. 105, representing the distance from the size line to the point of the tap. Thus, in testing the tap with this ring gauge, if the end of the tap comes exactly flush with the gauge, the location of the size line is exactly correct. If the end of the tap projects through or comes short of the face of the ring gauge at the small end of the hole, such projection or shortage represents the error in the location of the size line.

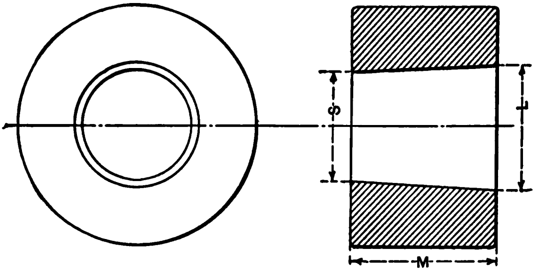

Fig. 104. Gauge for Testing Taper Pipe Taps

Pipe Sizes.	Error Permitted in the Location of the Size Line.
$\frac{1}{8}$–1	± $\frac{1}{32}$
1$\frac{1}{4}$–3	± $\frac{1}{16}$
3$\frac{1}{2}$ and up	± $\frac{1}{8}$

Plus in the above table signifies a projection of the tap through the ring gauge, and minus, failure of the tap to reach the end of the gauge.

TABLE LXII.

DIMENSIONS OF BRIGGS STANDARD PIPE TAPS.

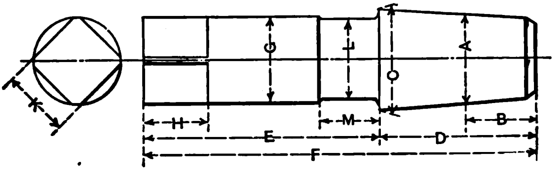

Fig. 105

Nominal Pipe Size.	Diameter at Size Line.	Distance from End to Size Line.	Diameter at Large End.	Length of Thread.	Length of Shank.	Total Length.	Diameter of Shank.	Length of Square.	Size of Square.	Diameter of Neck.	Length of Neck.
	A	*B*	*C*	*D*	*E*	*F*	*G*	*H*	*K*	*L*	*M*
1/8	0.405	25/64	0.443	1	1 5/8	2 5/8	7/16	9/16	5/16	3/8	3/8
1/4	0.540	9/16	0.575	1 1/8	1 3/4	2 7/8	17/32	9/16	3/8	15/32	3/8
3/8	0.675	9/16	0.718	1 1/4	1 7/8	3 1/8	9/16	5/8	7/16	These sizes have no neck.	These sizes have no neck.
1/2	0.840	3/4	0.887	1 1/2	2	3 1/2	3/4	11/16	9/16		
3/4	1.050	3/4	1.104	1 5/8	2 1/4	3 7/8	15/16	3/4	11/16		
1	1.315	15/16	1.366	1 3/4	2 1/2	4 1/4	1 1/8	13/16	13/16		
1 1/4	1.660	31/32	1.717	1 7/8	2 3/4	4 5/8	1 5/16	15/16	1		
1 1/2	1.900	1	1.963	2	3	5	1 1/2	1	1 1/8		
2	2.375	1	2.453	2 1/4	3 1/2	5 3/4	1 7/8	1 3/16	1 3/8		
2 1/2	2.875	1 1/2	2.961	2 7/8	4	6 7/8	2 1/4	1 3/8	1 11/16		
3	3.500	1 9/16	3.605	3 1/4	4 1/2	7 3/4	2 5/8	1 1/2	1 15/16		
3 1/2	4.000	1 5/8	4.125	3 5/8	4 9/16	8 3/16	2 13/16	1 9/16	2 1/8		
4	4.500	1 11/16	4.629	3 3/4	4 5/8	8 3/8	3	1 5/8	2 1/4		
4 1/2	5.000	1 7/8	5.125	3 7/8	4 11/16	8 9/16	3 3/16	1 11/16	2 3/8		
5	5.563	2	5.687	4	4 3/4	8 3/4	3 3/8	1 3/4	2 1/2		
6	6.625	2 1/4	6.766	4 1/2	4 7/8	9 3/8	3 3/4	1 7/8	2 13/16		
7	7.625	2 3/8	7.773	4 3/4	5	9 3/4	4 1/8	2	3 1/16		
8	8.625	2 3/8	8.773	4 3/4	5 1/8	9 7/8	4 1/2	2 1/8	3 3/8		
9	9.625	2 1/2	9.781	5	5 1/4	10 1/4	4 7/8	2 1/4	3 5/8		
10	10.750	2 1/2	10.906	5	5 3/8	10 3/8	5 1/4	2 3/8	3 15/16		

ENGLISH TAPER PIPE TAPS.

English taper pipe taps constitute a special class of taper taps. Most tap manufacturers in this country make them exactly like the Briggs standard pipe taps in regard to dimensions, the only difference being that the English taper pipe taps are provided with the Whitworth form of thread and with such a number of threads per inch as is called for by the standard for Whitworth standard gas and water pipe thread. It appears, however, that in England these taps are made with 1 inch taper per foot, instead of three-quarters inch, and at least one firm in this country follows the English practice.

The last statement is made on the authority of Mr. Charles E. Smart of Greenfield, Mass., who in a communication to *Machinery* in June, 1908, wrote as follows: "Mechanical hand-books give nothing on the subject of the taper of Whitworth pipe taps, and for that reason it is highly desirable that the question of correct taper be brought up in the discussion of this subject. The dimensions of these taps should be based upon standard Whitworth pipe tap gauges, which are made in England by the Whitworth Company. These gauges all taper 1 inch to the foot and are so marked upon the gauge.

"The accompanying table [LXIII] shows the dimensions of Whitworth pipe taps as made by the A. J. Smart Manufacturing Company. It will be noticed by comparing this table with the one for regular Briggs pipe taps, that the diameters at the small end are not the same for the same nominal sizes. This is because English pipe is smaller than American pipe, according to all tables, so that the ends on the Whitworth pipe taps should be made correspondingly smaller. It is believed by the A. J. Smart Manufacturing Company that the proper way to make the taps, therefore, is to make the diameter at the smaller end correspondingly smaller. The lengths of the pipe taps in the table will also be found to be shorter, because it has been found that all users of pipe taps, especially plumbers, prefer the shorter lengths, and many of the tap manufacturers are now making the lengths of the threaded part of pipe taps the same as those given in the table. The A. J. Smart

TABLE LXIII.

WHITWORTH PIPE TAPS.

(A. J. Smart Manufacturing Company's Standard.)

Taper per foot = 1 inch.

Nominal Size.	Diam. at Large End of Thread.	Total Length of Tap.	Length of Thread.	Length of Shank.	Diam. of Shank.	Length of Square.	No. of Threads per Inch, Whitworth Form.	No. of Flutes.	Size of Steel.
$\frac{1}{8}$	0.435	$2\frac{1}{8}$	1	$1\frac{1}{8}$	0.328	$\frac{11}{32}$	28	4	$\frac{15}{32}$
$\frac{1}{4}$	0.570	$2\frac{3}{8}$	$1\frac{1}{8}$	$1\frac{1}{4}$	0.438	$\frac{7}{16}$	19	4	$\frac{19}{32}$
$\frac{3}{8}$	0.718	$2\frac{5}{8}$	$1\frac{5}{16}$	$1\frac{5}{16}$	0.563	$\frac{1}{2}$	19	4	$\frac{3}{4}$
$\frac{1}{2}$	0.888	3	$1\frac{7}{16}$	$1\frac{9}{16}$	0.703	$\frac{9}{16}$	14	4	$\frac{59}{64}$
$\frac{5}{8}$	0.964	$3\frac{1}{4}$	$1\frac{15}{32}$	$1\frac{25}{32}$	0.781	$\frac{5}{8}$	14	4	1
$\frac{3}{4}$	1.103	$3\frac{3}{8}$	$1\frac{1}{2}$	$1\frac{7}{8}$	0.906	$\frac{11}{16}$	14	4	$1\frac{9}{64}$
1	1.382	$3\frac{3}{4}$	$1\frac{5}{8}$	$2\frac{1}{8}$	1.125	$\frac{13}{16}$	11	4	$1\frac{13}{32}$
$1\frac{1}{4}$	1.725	$4\frac{1}{8}$	$1\frac{3}{4}$	$2\frac{3}{8}$	1.453	$\frac{15}{16}$	11	6	$1\frac{3}{4}$
$1\frac{1}{2}$	1.958	$4\frac{3}{8}$	$1\frac{7}{8}$	$2\frac{1}{2}$	1.609	1	11	6	$1\frac{63}{64}$
$1\frac{3}{4}$	2.130	$4\frac{1}{2}$	$1\frac{15}{16}$	$2\frac{9}{16}$	1.766	$1\frac{1}{16}$	11	6	$2\frac{5}{32}$
2	2.430	$4\frac{5}{8}$	2	$2\frac{5}{8}$	2.063	$1\frac{1}{8}$	11	6	$2\frac{15}{32}$

Manufacturing Company also only makes 4 or 6 flutes in its taps. The company has found that customers do not like an odd number of flutes, as the taper with the odd number of flutes can never be measured by micrometers after the flutes have been once milled. This is a great disadvantage (or, to some people, an advantage) in cases of disputes as to the sizes of the taps. In the table given there will be found a column giving the size of the steel used for the different taps. This information is given for the convenience of the purchasing agent, the superintendent, the foreman, etc., and has often been found exceedingly useful."

In paragraph 7, page 6, of the "Report on British Standard Pipe Threads for Iron or Steel Pipe and Tubes," of April, 1905, issued by the Engineering Standards Committee, however, the taper of Whitworth pipe is given as three-quarters inch per foot. Before this report was issued it was the custom in England to make these taps with a taper of one inch per foot.

Pipe taps and taper taps in general are often made with the interrupted thread shown in Fig. 92, Chapter V. This form of thread is very well adapted for taper taps, and in case of a very steep taper is, in fact, almost essential if a smooth and perfect thread is to be cut.

In hardening, pipe taps should be drawn to a somewhat higher temperature than ordinary hand taps of the same sizes. The correct temperature is about 470° F.

PIPE HOBS.

Pipe hobs are used for sizing pipe dies after the thread has been cut nearly to size either in a lathe or by a pipe tap. The threaded portion of a pipe hob is made longer than that of pipe taps, but there is no good reason why this should be so, excepting that it has become customary, and established custom is as unyielding in tool-making as in anything else. Outside of the longer threaded portion, the only essential difference from the pipe tap is the number and the form of the flutes. These latter are cut with a 50-degree double-angle cutter, 25-degree angle on each side, which is the same kind of a cutter as is used for ordinary straight hob taps. The number of flutes may be approximately determined by the formula

$$8.5\,B = N,$$

in which B = diameter at large end of thread of hob and N = the number of flutes.

This formula gives the width of each land as about three-sixteenths inch, and the width of the space or flute the same amount. According to this formula the number of flutes for various sizes of pipe hobs is as follows:

Size of Pipe Hob.	Number of Flutes.	Size of Pipe Hob.	Number of Flutes.
⅛	5	2	22
¼	6	2½	26
⅜	6	3	32
½	8	3½	36
¾	10	4	40
1	12	4½	44
1¼	16	5	48
1½	18	6	58

Dimensions of Pipe Hobs. — The dimensions for lengths and diameters of pipe hobs are given in Table LXIV. The dimension A is given according to the established standard of the manufacturers of taps. This is the essential diameter and is located 1½ inches from the large end of the thread of the hob. The limit of error for the location of this diameter is the same as the limit for the location of the size line of pipe taps which has been previously stated, and the gauging is done in the same manner. It is evident that a separate set of ring gauges is required, and that the length of the gauge in this case should always be 1½ inches, the large diameter of the hole in the gauge being diameter B in Fig. 106, and the small diameter the dimension A. The taper of pipe hobs is, of course, the regular pipe thread taper, three-quarters inch per foot.

The more important dimensions in Table LXIV are figured from the formulas:

$$C = \frac{N + 16}{8},$$

$$D = \frac{5\sqrt{N} + 11}{4},$$

$F = A - \frac{1}{16}$ for pipe sizes up to and including 3 inches,

$F = \frac{N}{8} + 3\frac{1}{4}$ for $3\frac{1}{2}$-inch pipe size and larger.

In these formulas,

A = size of the hob $1\frac{1}{2}$ inches from the large end of the thread,
N = nominal size of hob (pipe size),
G = length of shank,
D = length of thread, and
F = diameter of shank.

TABLE LXIV.

DIMENSIONS OF PIPE HOBS.

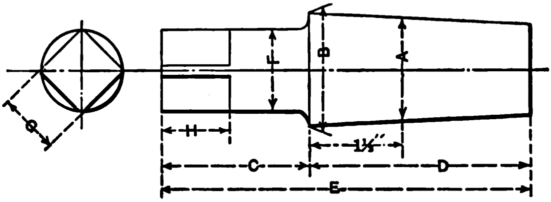

Fig. 106

Nominal Size.	Actual Size.	Diameter at Large End.	Length of Shank.	Length of Thread.	Length Over All.	Diam. of Shank.	Size of Square.	Length of Square.
	A	B	C	D	E	F	G	H
$\frac{1}{8}$	0.445	0.539	2	$3\frac{3}{16}$	$5\frac{3}{16}$	$\frac{3}{8}$	$\frac{5}{16}$	$\frac{1}{2}$
$\frac{1}{4}$	0.573	0.667	2	$3\frac{3}{8}$	$5\frac{3}{8}$	$\frac{1}{2}$	$\frac{3}{8}$	$\frac{5}{8}$
$\frac{3}{8}$	0.719	0.813	$2\frac{1}{16}$	$3\frac{1}{2}$	$5\frac{9}{16}$	$\frac{5}{8}$	$\frac{7}{16}$	$\frac{3}{4}$
$\frac{1}{2}$	0.885	0.979	$2\frac{1}{16}$	$3\frac{5}{8}$	$5\frac{11}{16}$	$\frac{13}{16}$	$\frac{5}{8}$	$\frac{7}{8}$
$\frac{3}{4}$	1.104	1.198	$2\frac{1}{8}$	$3\frac{7}{8}$	6	$1\frac{1}{16}$	$\frac{13}{16}$	1
1	1.363	1.457	$2\frac{1}{8}$	4	$6\frac{1}{8}$	$1\frac{5}{16}$	1	$1\frac{1}{8}$
$1\frac{1}{4}$	1.721	1.815	$2\frac{3}{16}$	$4\frac{1}{8}$	$6\frac{5}{16}$	$1\frac{5}{8}$	$1\frac{1}{4}$	$1\frac{1}{4}$
$1\frac{1}{2}$	1.955	2.049	$2\frac{3}{16}$	$4\frac{1}{4}$	$6\frac{7}{16}$	$1\frac{7}{8}$	$1\frac{7}{16}$	$1\frac{3}{8}$
2	2.460	2.554	$2\frac{1}{4}$	$4\frac{1}{2}$	$6\frac{3}{4}$	$2\frac{3}{8}$	$1\frac{13}{16}$	$1\frac{1}{2}$
$2\frac{1}{2}$	2.963	3.057	$2\frac{5}{16}$	$4\frac{11}{16}$	7	$2\frac{7}{8}$	$2\frac{3}{16}$	$1\frac{5}{8}$
3	3.620	3.714	$2\frac{3}{8}$	$4\frac{7}{8}$	$7\frac{1}{4}$	$3\frac{9}{16}$	$2\frac{5}{8}$	$1\frac{3}{4}$
$3\frac{1}{2}$	4.062	4.156	$2\frac{7}{16}$	$5\frac{1}{16}$	$7\frac{1}{2}$	$3\frac{11}{16}$	$2\frac{13}{16}$	$1\frac{3}{4}$
4	4.485	4.579	$2\frac{1}{2}$	$5\frac{1}{4}$	$7\frac{3}{4}$	$3\frac{3}{4}$	$2\frac{13}{16}$	$1\frac{7}{8}$
$4\frac{1}{2}$	5.000	5.094	$2\frac{9}{16}$	$5\frac{3}{8}$	$7\frac{15}{16}$	$3\frac{13}{16}$	$2\frac{7}{8}$	$1\frac{7}{8}$
5	5.565	5.659	$2\frac{5}{8}$	$5\frac{1}{2}$	$8\frac{1}{8}$	$3\frac{7}{8}$	$2\frac{15}{16}$	2
6	6.620	6.714	$2\frac{3}{4}$	$5\frac{3}{4}$	$8\frac{1}{2}$	4	3	2

Relief. — Pipe hobs, being provided with a taper thread, must be relieved both in the angle and on the top of the thread. In this respect they differ from straight-thread hobs, which are relieved only on the top of the thread of the short chamfer at the point.

TAPER BOILER TAPS.

Taper boiler taps, as the name indicates, are used in steam boiler work, and, like the pipe tap, are used in this work where a steam-tight fit is desired. The taper of these taps is the same as the pipe tap taper, three-quarters inch per foot. In regard to their construction there is nothing to say that has not already been said either in connection with pipe taps or about taper taps in general. The size by which these taps are designated is located one-quarter inch from the large end of the thread. The permissible limits of error in the location of the size line are the same as for pipe taps.

In Table LXV dimensions are given for taper boiler taps. The most important of these are approximately figured from the following formulas:

$$A = 3D + 2\tfrac{3}{4} \text{ inches},$$

$$B = \frac{3D}{4} + 1\tfrac{7}{8} \text{ inches},$$

$$C = \frac{D}{4} + \tfrac{3}{8} \text{ inch},$$

$$E = 2D + \tfrac{1}{2} \text{ inch}.$$

In these formulas,

A = total length of tap,
B = length of thread,
C = length of neck,
D = diameter of tap, measured one-quarter inch from the large end of the thread.

These taps are provided with 4 flutes up to $1\frac{1}{2}$ inches diameter, and with 5 flutes for sizes from $1\frac{5}{8}$ to 2 inches. If made in sizes larger than 2 inches, 6 flutes should be given to the tap. Boiler taps are always provided with 12 sharp V threads per inch, irrespective of the diameter of the tap.

TABLE LXV.

DIMENSIONS OF TAPER BOILER TAPS.

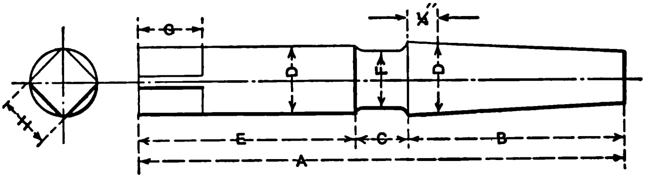

Fig. 107

Diam. of Tap.	Total Length.	Length of Thread.	Length of Neck.	Length of Shank.	Diam. of Neck.	Length of Square.	Size of Square.
D	*A*	*B*	*C*	*E*	*F*	*G*	*H*
$\frac{1}{2}$	$4\frac{1}{4}$	$2\frac{1}{4}$	$\frac{1}{2}$	$1\frac{1}{2}$	$\frac{11}{32}$	$\frac{1}{2}$	$\frac{3}{8}$
$\frac{9}{16}$	$4\frac{7}{16}$	$2\frac{5}{16}$	$\frac{1}{2}$	$1\frac{5}{8}$	$\frac{13}{32}$	$\frac{9}{16}$	$\frac{7}{16}$
$\frac{5}{8}$	$4\frac{5}{8}$	$2\frac{3}{8}$	$\frac{1}{2}$	$1\frac{3}{4}$	$\frac{15}{32}$	$\frac{5}{8}$	$\frac{15}{32}$
$\frac{11}{16}$	$4\frac{13}{16}$	$2\frac{3}{8}$	$\frac{9}{16}$	$1\frac{7}{8}$	$\frac{17}{32}$	$\frac{11}{16}$	$\frac{1}{2}$
$\frac{3}{4}$	5	$2\frac{7}{16}$	$\frac{9}{16}$	2	$\frac{19}{32}$	$\frac{3}{4}$	$\frac{9}{16}$
$\frac{13}{16}$	$5\frac{3}{16}$	$2\frac{1}{2}$	$\frac{9}{16}$	$2\frac{1}{8}$	$\frac{21}{32}$	$\frac{13}{16}$	$\frac{5}{8}$
$\frac{7}{8}$	$5\frac{3}{8}$	$2\frac{9}{16}$	$\frac{9}{16}$	$2\frac{1}{4}$	$\frac{23}{32}$	$\frac{7}{8}$	$\frac{11}{16}$
$\frac{15}{16}$	$5\frac{9}{16}$	$2\frac{9}{16}$	$\frac{5}{8}$	$2\frac{3}{8}$	$\frac{25}{32}$	$\frac{15}{16}$	$\frac{11}{16}$
1	$5\frac{3}{4}$	$2\frac{5}{8}$	$\frac{5}{8}$	$2\frac{1}{2}$	$\frac{27}{32}$	1	$\frac{3}{4}$
$1\frac{1}{16}$	$5\frac{15}{16}$	$2\frac{11}{16}$	$\frac{5}{8}$	$2\frac{5}{8}$	$\frac{29}{32}$	$1\frac{1}{16}$	$\frac{13}{16}$
$1\frac{1}{8}$	$6\frac{1}{8}$	$2\frac{3}{4}$	$\frac{5}{8}$	$2\frac{3}{4}$	$\frac{31}{32}$	$1\frac{1}{8}$	$\frac{7}{8}$
$1\frac{3}{16}$	$6\frac{5}{16}$	$2\frac{3}{4}$	$\frac{11}{16}$	$2\frac{7}{8}$	$1\frac{1}{32}$	$1\frac{3}{16}$	$\frac{7}{8}$
$1\frac{1}{4}$	$6\frac{1}{2}$	$2\frac{13}{16}$	$\frac{11}{16}$	3	$1\frac{3}{32}$	$1\frac{1}{4}$	$\frac{15}{16}$
$1\frac{5}{16}$	$6\frac{11}{16}$	$2\frac{7}{8}$	$\frac{11}{16}$	$3\frac{1}{8}$	$1\frac{5}{32}$	$1\frac{5}{16}$	1
$1\frac{3}{8}$	$6\frac{7}{8}$	$2\frac{15}{16}$	$\frac{11}{16}$	$3\frac{1}{4}$	$1\frac{7}{32}$	$1\frac{3}{8}$	$1\frac{1}{16}$
$1\frac{7}{16}$	$7\frac{1}{16}$	$2\frac{15}{16}$	$\frac{3}{4}$	$3\frac{3}{8}$	$1\frac{9}{32}$	$1\frac{7}{16}$	$1\frac{1}{16}$
$1\frac{1}{2}$	$7\frac{1}{4}$	3	$\frac{3}{4}$	$3\frac{1}{2}$	$1\frac{11}{32}$	$1\frac{1}{2}$	$1\frac{1}{8}$
$1\frac{5}{8}$	$7\frac{5}{8}$	$3\frac{1}{8}$	$\frac{3}{4}$	$3\frac{3}{4}$	$1\frac{15}{32}$	$1\frac{1}{2}$	$1\frac{1}{4}$
$1\frac{3}{4}$	8	$3\frac{3}{16}$	$\frac{13}{16}$	4	$1\frac{19}{32}$	$1\frac{1}{2}$	$1\frac{5}{16}$
$1\frac{7}{8}$	$8\frac{3}{8}$	$3\frac{5}{16}$	$\frac{13}{16}$	$4\frac{1}{4}$	$1\frac{23}{32}$	$1\frac{1}{2}$	$1\frac{7}{16}$
2	$8\frac{3}{4}$	$3\frac{3}{8}$	$\frac{7}{8}$	$4\frac{1}{2}$	$1\frac{27}{32}$	$1\frac{1}{2}$	$1\frac{1}{2}$

PATCH-BOLT TAPS.

Patch-bolt taps are practically only a modified form of taper boiler taps. The taper is the same, but the threaded portion as well as the total length is shorter than the corresponding lengths of a taper boiler tap. The taps are used for similar purposes in boiler construction.

TABLE LXVI.

DIMENSIONS OF PATCH-BOLT TAPS.

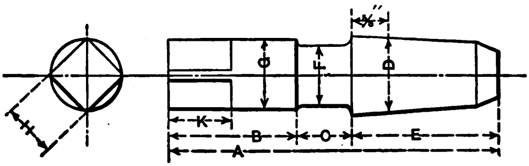

Fig. 108

Diam. of Tap.	Total Length.	Length of Shank.	Length of Neck.	Length of Thread.	Diam. of Neck.	Diam. of Shank.	Size of Square.	Length of Square.
D	*A*	*B*	*C*	*E*	*F*	*G*	*H*	*K*
1/2	2 7/8	1 1/8	1/2	1 1/4	3/8	1/2	3/8	1/2
9/16	3	1 3/16	1/2	1 5/16	7/16	9/16	7/16	1/2
5/8	3 1/16	1 1/4	1/2	1 5/16	1/2	5/8	15/32	9/16
11/16	3 1/8	1 5/16	1/2	1 5/16	9/16	11/16	1/2	9/16
3/4	3 3/16	1 3/8	1/2	1 5/16	5/8	3/4	9/16	5/8
13/16	3 1/4	1 7/16	1/2	1 5/16	11/16	13/16	5/8	5/8
7/8	3 3/8	1 1/2	1/2	1 3/8	3/4	7/8	21/32	11/16
15/16	3 7/16	1 9/16	1/2	1 3/8	13/16	15/16	11/16	11/16
1	3 1/2	1 5/8	1/2	1 3/8	7/8	1	3/4	3/4
1 1/16	3 9/16	1 11/16	1/2	1 3/8	15/16	1 1/16	13/16	3/4
1 1/8	3 5/8	1 3/4	1/2	1 3/8	1	1 1/8	27/32	13/16
1 3/16	3 3/4	1 13/16	1/2	1 7/16	1 1/16	1 3/16	7/8	13/16
1 1/4	3 13/16	1 7/8	1/2	1 7/16	1 1/8	1 1/4	15/16	7/8
1 5/16	3 7/8	1 15/16	1/2	1 7/16	1 3/16	1 5/16	1	7/8
1 3/8	3 15/16	2	1/2	1 7/16	1 1/4	1 3/8	1 1/32	15/16
1 7/16	4	2 1/16	1/2	1 7/16	1 5/16	1 7/16	1 1/16	15/16
1 1/2	4 1/16	2 1/8	1/2	1 7/16	1 3/8	1 1/2	1 1/8	1

The dimensions for patch-bolt taps are given in Table LXVI. The essential dimensions are approximately figured from the formulas:

$$\begin{aligned} A &= 1\tfrac{3}{16}\,D + 2\tfrac{5}{16} \text{ inches,} \\ B &= D + \tfrac{5}{8} \text{ inch,} \\ E &= \tfrac{3}{16}\,D + 1\tfrac{3}{16} \text{ inches,} \\ F &= D - \tfrac{1}{8} \text{ inch.} \end{aligned}$$

In these formulas,

D = diameter of tap (measured five-eighths inch from the large end of the thread),
A = total length of tap,
B = length of shank,
E = length of thread, and
F = diameter of neck.

The diameter of the shank equals the diameter of the tap.

Patch-bolt taps are always provided with 12 threads per inch, V form, irrespective of diameter. All sizes are fluted with 4 flutes up to 1½ inches diameter. Patch-bolt taps are not manufactured in larger sizes.

MUD AND WASH-OUT TAPS.

Mud and wash-out taps are used in boiler work the same as the taps previously referred to. These taps are sometimes referred to as arch pipe taps, but the former name is by far the more common. They are made in six sizes, usually known by numbers as stated in Table LXVII. These taps taper 1¼ inches per foot, and have 12 sharp V threads per inch. The dimensions as given in Table LXVII conform in all essential details to the practice of manufacturers of taps. Number 0 tap is provided with 5 flutes, No. 1 with 6, No. 2 with 7, and the others with 8 flutes.

TABLE LXVII.

DIMENSIONS OF MUD OR WASH-OUT TAPS.

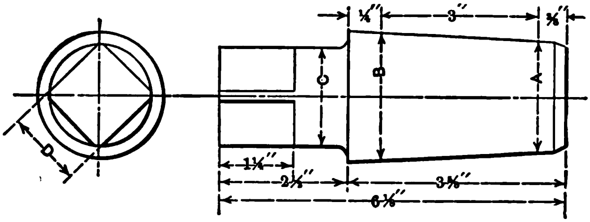

Fig. 109

Number of Tap.	Diameter at Small End.	Diameter at Large End.	Diameter of Shank.	Size of Square.
	A	*B*	*C*	*D*
0	1 7/16	1 3/4	1 1/2	1 1/8
1	1 3/4	2 1/16	1 7/8	1 3/8
2	2 1/16	2 3/8	2	1 1/2
3	2 3/8	2 11/16	2	1 1/2
4	2 11/16	3	2	1 1/2
5	3	3 5/16	2	1 1/2

BLACKSMITHS' TAPER TAPS.

There is but one more class of taper taps generally manufactured, the blacksmiths' taper tap. This tap has a long taper thread and a very short shank, only sufficiently long for a square and a collar to prevent the tap wrench from slipping from the square down upon the body of the tap. The taper of the thread is three-quarters inch per foot; the size by which the tap is known is measured five-eighths inch from the large end of the thread. These taps are generally made with the standard number of V threads per inch corresponding to their nominal diameter. The sizes given in Table LXVIII are the sizes generally made; all these sizes have four flutes.

TABLE LXVIII.

DIMENSIONS OF BLACKSMITHS' TAPER TAPS.

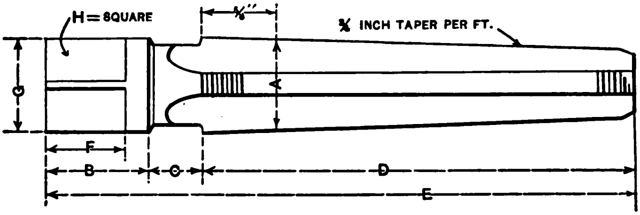

Fig. 110

Nominal Diam. of Tap.	Length of Shank.	Length of Neck.	Length of Thread.	Total Length.	Length of Square.	Diam. of Shank.	Size of Square.
A	*B*	*C*	*D*	*E*	*F*	*G*	*H*
$\frac{1}{4}$	$\frac{1}{2}$	$\frac{3}{8}$	$1\frac{1}{2}$	$2\frac{3}{8}$	$\frac{3}{8}$	$\frac{5}{16}$	$\frac{1}{4}$
$\frac{5}{16}$	$\frac{9}{16}$	$\frac{7}{16}$	$1\frac{11}{16}$	$2\frac{11}{16}$	$\frac{3}{8}$	$\frac{3}{8}$	$\frac{9}{32}$
$\frac{3}{8}$	$\frac{5}{8}$	$\frac{7}{16}$	$1\frac{7}{8}$	$2\frac{15}{16}$	$\frac{7}{16}$	$\frac{7}{16}$	$\frac{5}{16}$
$\frac{7}{16}$	$\frac{5}{8}$	$\frac{7}{16}$	$2\frac{1}{16}$	$3\frac{1}{8}$	$\frac{7}{16}$	$\frac{1}{2}$	$\frac{3}{8}$
$\frac{1}{2}$	$\frac{11}{16}$	$\frac{1}{2}$	$2\frac{1}{4}$	$3\frac{7}{16}$	$\frac{1}{2}$	$\frac{9}{16}$	$\frac{7}{16}$
$\frac{9}{16}$	$\frac{3}{4}$	$\frac{1}{2}$	$2\frac{7}{16}$	$3\frac{11}{16}$	$\frac{1}{2}$	$\frac{5}{8}$	$\frac{15}{32}$
$\frac{5}{8}$	$\frac{13}{16}$	$\frac{1}{2}$	$2\frac{5}{8}$	$3\frac{15}{16}$	$\frac{9}{16}$	$\frac{11}{16}$	$\frac{1}{2}$
$\frac{11}{16}$	$\frac{13}{16}$	$\frac{1}{2}$	$2\frac{13}{16}$	$4\frac{1}{8}$	$\frac{9}{16}$	$\frac{3}{4}$	$\frac{9}{16}$
$\frac{3}{4}$	$\frac{7}{8}$	$\frac{9}{16}$	3	$4\frac{7}{16}$	$\frac{5}{8}$	$\frac{13}{16}$	$\frac{5}{8}$
$\frac{13}{16}$	$\frac{15}{16}$	$\frac{9}{16}$	$3\frac{3}{16}$	$4\frac{11}{16}$	$\frac{5}{8}$	$\frac{7}{8}$	$\frac{11}{16}$
$\frac{7}{8}$	1	$\frac{9}{16}$	$3\frac{3}{8}$	$4\frac{15}{16}$	$\frac{11}{16}$	$\frac{15}{16}$	$\frac{11}{16}$
$\frac{15}{16}$	1	$\frac{5}{8}$	$3\frac{9}{16}$	$5\frac{3}{16}$	$\frac{11}{16}$	1	$\frac{3}{4}$
1	$1\frac{1}{16}$	$\frac{5}{8}$	$3\frac{3}{4}$	$5\frac{7}{16}$	$\frac{3}{4}$	$1\frac{1}{16}$	$\frac{13}{16}$
$1\frac{1}{8}$	$1\frac{3}{16}$	$\frac{11}{16}$	$4\frac{1}{8}$	6	$\frac{13}{16}$	$1\frac{3}{16}$	$\frac{7}{8}$
$1\frac{1}{4}$	$1\frac{1}{4}$	$\frac{11}{16}$	$4\frac{1}{2}$	$6\frac{7}{16}$	$\frac{7}{8}$	$1\frac{5}{16}$	1
$1\frac{3}{8}$	$1\frac{3}{8}$	$\frac{3}{4}$	$4\frac{7}{8}$	7	$\frac{15}{16}$	$1\frac{7}{16}$	$1\frac{1}{16}$
$1\frac{1}{2}$	$1\frac{7}{16}$	$\frac{3}{4}$	$5\frac{1}{4}$	$7\frac{7}{16}$	1	$1\frac{9}{16}$	$1\frac{3}{16}$

PIPE TAPS AND DRILLS COMBINED.

Pipe taps are sometimes provided with a drill point as shown in Fig. 111, for drilling the hole previous to tapping. Instead of a square for a wrench, they are then usually provided with square taper shank for a taper drill socket. The dimensions of the shank must of course suit the requirements. The threaded portion is an exact duplicate of the threaded part of a pipe tap. The drill part has two flutes like a twist drill, and the point is ground to the same angle, 59 degrees with the center line, as are ordinary twist drills. The diameter and the length of the drill point are the only dimensions necessary to state in this connection.

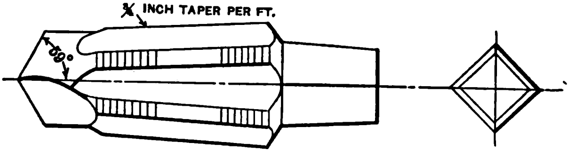

Fig. 111. Pipe Tap and Drill Combined

Pipe Tap Size.	Length of Drill Point.	Diameter of Drill.
1/8	7/8	11/32
1/4	1	7/16
3/8	1 1/8	37/64
1/2	1 1/4	45/64
3/4	1 3/8	29/32
1	1 1/2	1 9/64
1 1/4	1 5/8	1 1/2
1 1/2	1 3/4	1 23/32
2	1 7/8	2 3/16
2 1/2	2	2 5/8

STAY-BOLT TAPS.

Stay-bolt taps are extensively used in locomotive boiler work. The ordinary or radial stay-bolt tap is shown in Fig. 112; in Fig. 113 is shown the spindle stay-bolt tap, which has derived its name from the guiding spindle upon which the tap proper revolves.

Radial Stay-bolt Taps. — If we first give our attention to the radial stay-bolt tap as shown in Fig. 112, the length

C represents the threaded portion. Of this part, the portion *F* is straight or parallel, and the part *G* is chamfered. The part *E* is a taper reamer which reams the hole previous to tapping. The taper of this reamer is usually three-thirty-seconds of an inch per foot. The diameter at *H* is equal to the root diameter of the thread. The diameter of the shank is about 0.005 inch below the root diameter.

Stay-bolt taps are usually made with 12 threads per inch of the sharp V form. Although practice has almost universally favored the employment of the sharp V thread, the main advantage (and perhaps the only real advantage) of a thread of this sort is that it can be made tight in the boiler sheets and kept tight without any great difficulty. On the other hand, the use of the V thread violates one of the fundamental principles of machine design — the principle, namely, of avoiding all sharp angles and of filleting every place where such angles tend to occur.

This must have occurred many times to engineers and designers, and yet no general movement has been made to discard the V thread and substitute for it a form that shall not be open to the same objection. The Whitworth thread is receiving considerable attention at the present time, however, for use upon stay-bolts, and it is regarded with favor by certain builders of large experience, notably by the Baldwin Locomotive Works, who are now using this thread upon locomotive stay-bolts. If experience shows that stay-bolts can be made tight and kept so when fitted with this thread, it is probable that its adoption will extend to other builders.

Stay-bolt taps receive very rough treatment, and are exposed to hard usage, and should therefore be made of an extra good quality of steel. The thread should be relieved both on top and in the angle of the thread on the chamfered portion. In order to prevent the existence of too wide cutting edges toward the smaller end of the chamfered portion, the tap is threaded taper about one-half of the chamfered part. This prevents the tap from reaming instead of cutting. In order to gain the same end it is advisable never to make the chamfer any longer than 6 inches.

The interrupted thread shown in Fig. 92, Chapter V, is particularly of value in the case of stay-bolt taps, and is probably used more on this class of taps than on any other.

In Table LXIX the dimensions for standard radial stay-bolt taps as made by a prominent tap-manufacturing firm are given. However, stay-bolt taps are made in a variety of sizes and designs for special requirements; but the two kinds given in the table are the most commonly used. All stay-bolt taps of sizes given in the table should have 5 flutes.

The over-size limit of variation in diameter from the correct size, is commonly assumed in stay-bolt taps to be 0.002 inch for taps smaller than 1 inch in diameter and 0.003 inch for larger sizes. It is evident that it is not permissible for the tap to be *under* the correct size; consequently the diameter is required, after hardening, to be between the standard diameter and a diameter 0.002 or 0.003 inch respectively, above the standard.

Sometimes stay-bolt taps are provided with a threaded guide at the upper end of the thread. This guide is not fluted and should be made slightly smaller in diameter than the cutting size of the tap. The amount which the diameter is smaller is usually about 0.010 inch, and should apply to the angle diameter as well as to the top of the thread. While not fluted, this threaded guide ought still to be grooved by a small convex cutter for oil passages to the flutes.

TABLE LXIX.

DIMENSIONS OF REGULAR STAY-BOLT TAPS.

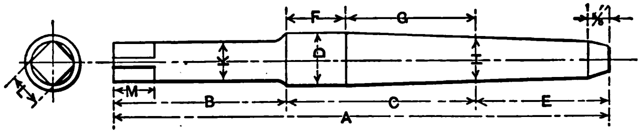

Fig. 112

Total Length of Tap.	Diameter of Tap.	Length of Shank.	Length of Thread.	Length of Reamer.	Length of Parallel Thread.	Length of Chamfer.	Root Diameter.	Diameter of Shank.	Size of Square.	Length of Square.
A	*D*	*B*	*C*	*E*	*F*	*G*	*H*	*K*	*L*	*M*
20 inches	¾	7	7½	5½	1½	6	0.606	0.601	$\frac{15}{32}$	¾
	$\frac{13}{16}$	7	7½	5½	1½	6	0.668	0.663	½	¾
	⅞	7	7½	5½	1½	6	0.731	0.726	$\frac{9}{16}$	¾
	$\frac{15}{16}$	7	7½	5½	1½	6	0.793	0.788	$\frac{19}{32}$	¾
	1	7	7½	5½	1½	6	0.856	0.851	$\frac{21}{32}$	1
	1$\frac{1}{16}$	7	7½	5½	1½	6	0.918	0.913	$\frac{11}{16}$	1
	1⅛	7	7½	5½	1½	6	0.981	0.976	¾	1
	1$\frac{3}{16}$	7	7½	5½	1½	6	1.043	1.038	$\frac{25}{32}$	1
	1¼	7	7½	5½	1½	6	1.106	1.101	$\frac{27}{32}$	1¼
	1$\frac{5}{16}$	7	7½	5½	1½	6	1.168	1.163	⅞	1¼
	1⅜	7	7½	5½	1½	6	1.231	1.226	$\frac{15}{16}$	1¼
24 inches	¾	9	8	7	2	6	0.606	0.601	$\frac{15}{32}$	¾
	$\frac{13}{16}$	9	8	7	2	6	0.668	0.663	½	¾
	⅞	9	8	7	2	6	0.731	0.726	$\frac{9}{16}$	¾
	$\frac{15}{16}$	9	8	7	2	6	0.793	0.788	$\frac{9}{2}$	¾
	1	9	8	7	2	6	0.856	0.851	$\frac{21}{32}$	1
	1$\frac{1}{16}$	9	8	7	2	6	0.918	0.913	$\frac{11}{16}$	1
	1⅛	9	8	7	2	6	0.981	0.976	¾	1
	1$\frac{3}{16}$	9	8	7	2	6	1.043	1.038	$\frac{25}{32}$	1
	1¼	9	8	7	2	6	1.106	1.101	$\frac{27}{32}$	1¼
	1$\frac{5}{16}$	9	8	7	2	6	1.168	1.163	⅞	1¼
	1⅜	9	8	7	2	6	1.231	1.226	$\frac{15}{16}$	1¼

Spindle Stay-Bolt Taps. — The spindle stay-bolt tap, as shown in Fig. 113, is not provided with a reamer, and with but a short chamfer. It is fluted about half way of the threaded part. The remaining part of the thread acts as a guide and should be made in the same way as threaded guides for radial stay-bolt taps. The guide *E* on the end of the spindle holds the tap in place in relation to the inner tube sheet while the outer one is threaded. The standard dimensions for these taps are given in Fig. 113 and in Table LXX.

TABLE LXX.

DIMENSIONS OF SPINDLE STAY-BOLT TAPS.

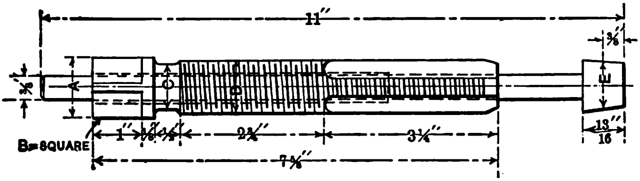

Fig. 113

Diameter of Tap.	Diameter of Shank.	Size of Square.	Diameter of Neck.	Diameter of Guide.
D	*A*	*B*	*C*	*E*
$\frac{3}{4}$	1	$\frac{3}{4}$	0.601	$\frac{5}{8}$
$\frac{13}{16}$	1	$\frac{3}{4}$	0.663	$\frac{11}{16}$
$\frac{7}{8}$	1	$\frac{3}{4}$	0.726	$\frac{3}{4}$
$\frac{15}{16}$	1	$\frac{3}{4}$	0.788	$\frac{13}{16}$
1	$1\frac{1}{16}$	$\frac{13}{16}$	0.851	$\frac{7}{8}$
$1\frac{1}{16}$	$1\frac{1}{8}$	$\frac{7}{8}$	0.913	$\frac{15}{16}$
$1\frac{1}{8}$	$1\frac{3}{16}$	$\frac{7}{8}$	0.976	1
$1\frac{3}{16}$	$1\frac{1}{4}$	$\frac{15}{16}$	1.038	$1\frac{1}{16}$
$1\frac{1}{4}$	$1\frac{5}{16}$	1	1.101	$1\frac{1}{8}$
$1\frac{5}{16}$	$1\frac{3}{8}$	$1\frac{1}{16}$	1.163	$1\frac{3}{16}$
$1\frac{3}{8}$	$1\frac{7}{16}$	$1\frac{1}{16}$	1.226	$1\frac{1}{4}$

STRAIGHT BOILER TAPS.

Straight boiler taps are, strictly speaking, only a special class of hand taps. They have a long chamfer and a straight guide at the point. The chamfered portion is relieved on the top of the thread. These taps are fluted in the same way as hand taps. In Table LXXI the dimensions for these taps are given.

TABLE LXXI.

DIMENSIONS OF STRAIGHT BOILER TAPS.

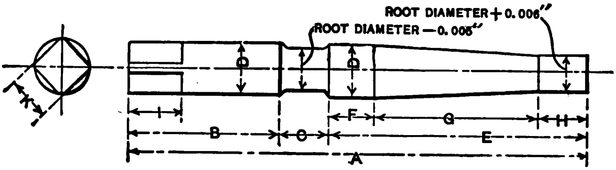

Fig. 114

Diam. of Tap.	Total Length.	Length of Shank.	Length of Neck.	Length of Thread.	Length of Full Thread.	Length of Chamfer.	Length of Pilot.	Length of Square.	Size of Square.
D	*A*	*B*	*C*	*E*	*F*	*G*	*H*	*I*	*K*
1/2	4 1/4	1 3/4	1/2	2	1/2	1 1/8	3/8	1/2	3/8
9/16	4 7/16	1 13/16	1/2	2 1/8	9/16	1 3/16	3/8	9/16	7/16
5/8	4 5/8	1 13/16	1/2	2 5/16	5/8	1 1/4	7/16	5/8	15/32
11/16	4 13/16	1 13/16	9/16	2 7/16	11/16	1 5/16	7/16	11/16	1/2
3/4	5	1 7/8	9/16	2 9/16	3/4	1 5/16	1/2	3/4	9/16
13/16	5 3/16	1 15/16	9/16	2 11/16	13/16	1 3/8	1/2	13/16	5/8
7/8	5 3/8	2	9/16	2 13/16	7/8	1 7/16	1/2	7/8	11/16
15/16	5 9/16	2	5/8	2 15/16	15/16	1 1/2	1/2	15/16	11/16
1	5 3/4	2	5/8	3 1/8	1	1 9/16	9/16	1	3/4
1 1/16	5 15/16	2 1/16	5/8	3 1/4	1 1/16	1 5/8	9/16	1 1/16	13/16
1 1/8	6 1/8	2 1/16	5/8	3 7/16	1 1/8	1 11/16	5/8	1 1/8	7/8
1 3/16	6 5/16	2 1/16	11/16	3 9/16	1 3/16	1 3/4	5/8	1 3/16	7/8
1 1/4	6 1/2	2 1/8	11/16	3 11/16	1 1/4	1 3/4	11/16	1 1/4	15/16
1 5/16	6 11/16	2 3/16	11/16	3 13/16	1 5/16	1 13/16	11/16	1 5/16	1
1 3/8	6 7/8	2 1/4	11/16	3 15/16	1 3/8	1 7/8	11/16	1 3/8	1 1/16
1 7/16	7 1/16	2 1/4	11/16	4 1/8	1 7/16	1 15/16	3/4	1 7/16	1 1/16
1 1/2	7 1/4	2 1/4	3/4	4 1/4	1 1/2	2	3/4	1 1/2	1 1/8
1 5/8	7 5/8	2 5/16	3/4	4 9/16	1 5/8	2 1/8	13/16	1 1/2	1 1/4
1 3/4	8	2 3/8	13/16	4 13/16	1 3/4	2 3/16	7/8	1 1/2	1 5/16
1 7/8	8 3/8	2 1/2	13/16	5 1/16	1 7/8	2 5/16	7/8	1 1/2	1 7/16
2	8 3/4	2 1/2	7/8	5 3/8	2	2 7/16	15/16	1 1/2	1 1/2

The most important of these dimensions are determined from the formulas:

$A = 3\,D + 2\tfrac{3}{4}$ inches,
$E = 2\tfrac{1}{4}\,D + \tfrac{7}{8}$ inch,
$F = D$,
$H = \tfrac{3}{8}\,D + \tfrac{3}{16}$ inch,

in which formulas,

A = total length of tap,
D = diameter of tap,
E = length of threaded portion,
F = length of full or parallel thread, and
H = length of guide.

In making these taps the same limits in regard to oversize diameters as are employed for regular hand taps should be adopted.

STRAIGHT PIPE TAPS.

Straight pipe taps, as was mentioned in a previous chapter, are only a variation of hand taps, having the same number of threads per inch as the corresponding sizes of taper pipe taps, and a diameter arbitrarily adopted by the manufacturers of these taps. Table LXXII gives the dimensions for taps up to and including three-quarters inch nominal diameter. The larger sizes are given in Table LXXIII. It will be noticed that the difference in appearance between the larger and smaller sizes is simply that the latter is provided with a short neck, turned down below the root diameter, while on the larger sizes the whole shank is turned down below the root of the thread.

TABLE LXXII.

STANDARD STRAIGHT PIPE TAPS.

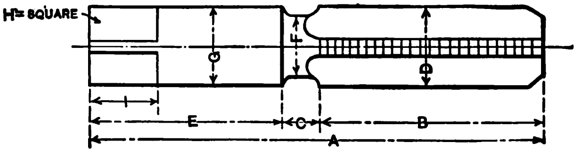

Fig. 115

Nominal Size.	Diam. of Tap.	Total Length.	Length of Thread.	Length of Neck.	Length of Shank.	Diam. of Neck.	Diam. of Shank.	Size of Square.	Length of Square.
	D	*A*	*B*	*C*	*E*	*F*	*G*	*H*	*I*
$\frac{1}{8}$	0.398	$2\frac{5}{8}$	1	$\frac{5}{16}$	$1\frac{5}{16}$	0.335	$\frac{3}{8}$	$\frac{9}{32}$	$\frac{7}{16}$
$\frac{1}{4}$	0.531	$2\frac{7}{8}$	$1\frac{1}{8}$	$\frac{3}{8}$	$1\frac{3}{8}$	0.440	$\frac{1}{2}$	$\frac{3}{8}$	$\frac{1}{2}$
$\frac{3}{8}$	0.672	$3\frac{1}{16}$	$1\frac{1}{4}$	$\frac{3}{8}$	$1\frac{7}{16}$	0.575	$\frac{5}{8}$	$\frac{15}{32}$	$\frac{9}{16}$
$\frac{1}{2}$	0.828	$3\frac{1}{4}$	$1\frac{3}{8}$	$\frac{7}{16}$	$1\frac{7}{16}$	0.705	$\frac{3}{4}$	$\frac{9}{16}$	$\frac{5}{8}$
$\frac{3}{4}$	1.041	$3\frac{5}{8}$	$1\frac{5}{8}$	$\frac{1}{2}$	$1\frac{1}{2}$	0.915	1	$\frac{3}{4}$	$\frac{3}{4}$

TABLE LXXIII.

STANDARD STRAIGHT PIPE TAPS.

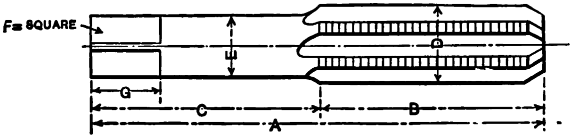

Fig. 116

Nominal Size.	Diam. of Tap.	Total Length.	Length of Thread.	Length of Shank.	Diam. of Shank.	Size of Square.	Length of Square.
	D	*A*	*B*	*C*	*E*	*F*	*G*
1	1.293	4	$1\frac{3}{4}$	$2\frac{1}{4}$	$1\frac{1}{8}$	$\frac{13}{16}$	$\frac{13}{16}$
$1\frac{1}{4}$	1.645	$4\frac{7}{16}$	$1\frac{15}{16}$	$2\frac{1}{2}$	$1\frac{1}{4}$	$\frac{15}{16}$	$\frac{15}{16}$
$1\frac{1}{2}$	1.880	$4\frac{7}{8}$	$2\frac{1}{8}$	$2\frac{3}{4}$	$1\frac{3}{8}$	$1\frac{1}{16}$	1
2	2.359	$5\frac{11}{16}$	$2\frac{7}{16}$	$3\frac{1}{4}$	$1\frac{5}{8}$	$1\frac{1}{4}$	$1\frac{3}{16}$
$2\frac{1}{2}$	2.836	$6\frac{1}{2}$	$2\frac{3}{4}$	$3\frac{3}{4}$	$1\frac{7}{8}$	$1\frac{7}{16}$	$1\frac{5}{16}$
3	3.461	$7\frac{3}{8}$	$3\frac{1}{8}$	$4\frac{1}{4}$	$2\frac{1}{8}$	$1\frac{5}{8}$	$1\frac{1}{2}$
$3\frac{1}{2}$	3.971	$8\frac{3}{16}$	$3\frac{7}{16}$	$4\frac{3}{4}$	$2\frac{3}{8}$	$1\frac{13}{16}$	$1\frac{11}{16}$
4	4.398	9	$3\frac{3}{4}$	$5\frac{1}{4}$	$2\frac{5}{8}$	$1\frac{15}{16}$	$1\frac{13}{16}$

These taps are chamfered the same as plug hand taps, and relieved only on the top of the thread on the chamfered part.

The number of flutes may be made the same as for corresponding sizes of Briggs standard pipe taps; if it is considered that fewer flutes would be more advisable, approximately the same number of flutes as is given to regular hand taps will be satisfactory. In cases like this the number of flutes, within reasonable limits, is largely a matter of judgment. The straight pipe tap, being actually a hand tap, should evidently be fluted like a hand tap. But inasmuch as the tap has a greater number of threads per inch than corresponding sizes of ordinary hand taps, there is a reason for providing it with a greater number of flutes.

English straight pipe taps having Whitworth form of threads and made according to Whitworth's thread system for gas and water piping are given in Tables LXXIV and LXXV.

TABLE LXXIV.

ENGLISH STRAIGHT PIPE TAPS.

(See Fig. 115 for meaning of letters in table.)

Nominal Size.	Diam. of Tap.	Total Length.	Length of Thread.	Length of Neck.	Length of Shank.	Diam. of Neck.	Diam. of Shank.	Size of Square.	Length of Square.
	D	*A*	*B*	*C*	*E*	*F*	*G*	*H*	*I*
1/8	0.385	2 5/8	1	5/16	1 5/16	0.335	3/8	9/32	7/16
1/4	0.520	2 7/8	1 1/8	3/8	1 3/8	0.448	1/2	3/8	1/2
3/8	0.665	3 1/16	1 1/4	3/8	1 7/16	0.593	5/8	15/32	9/16
1/2	0.822	3 1/4	1 3/8	7/16	1 7/16	0.726	3/4	9/16	5/8
5/8	0.902	3 7/16	1 1/2	7/16	1 1/2	0.806	7/8	21/32	11/16
3/4	1.034	3 5/8	1 5/8	1/2	1 1/2	0.938	1	3/4	3/4

TABLE LXXV.

ENGLISH STRAIGHT PIPE TAPS.

(See Fig. 116 for meaning of letters in table.)

Nominal Size.	Diam. of Tap.	Total Length.	Length of Thread.	Length of Shank.	Diam. of Shank.	Size of Square.	Length of Square.
	D	*A*	*B*	*C*	*E*	*F*	*G*
$\frac{7}{8}$	1.189	$3\frac{13}{16}$	$1\frac{11}{16}$	$2\frac{1}{8}$	$1\frac{1}{16}$	$\frac{13}{16}$	$\frac{13}{16}$
1	1.302	4	$1\frac{3}{4}$	$2\frac{1}{4}$	$1\frac{1}{8}$	$\frac{13}{16}$	$\frac{13}{16}$
$1\frac{1}{8}$	1.492	$4\frac{1}{4}$	$1\frac{7}{8}$	$2\frac{3}{8}$	$1\frac{3}{16}$	$\frac{7}{8}$	$\frac{7}{8}$
$1\frac{1}{4}$	1.650	$4\frac{7}{16}$	$1\frac{15}{16}$	$2\frac{1}{2}$	$1\frac{1}{4}$	$\frac{15}{16}$	$\frac{15}{16}$
$1\frac{3}{8}$	1.745	$4\frac{11}{16}$	$2\frac{1}{16}$	$2\frac{5}{8}$	$1\frac{5}{16}$	1	$\frac{15}{16}$
$1\frac{1}{2}$	1.882	$4\frac{7}{8}$	$2\frac{1}{8}$	$2\frac{3}{4}$	$1\frac{3}{8}$	$1\frac{1}{16}$	1
$1\frac{5}{8}$	2.021	$5\frac{1}{16}$	$2\frac{3}{16}$	$2\frac{7}{8}$	$1\frac{7}{16}$	$1\frac{1}{16}$	$1\frac{1}{16}$
$1\frac{3}{4}$	2.160	$5\frac{5}{16}$	$2\frac{5}{16}$	3	$1\frac{1}{2}$	$1\frac{1}{8}$	$1\frac{1}{16}$
$1\frac{7}{8}$	2.245	$5\frac{1}{2}$	$2\frac{3}{8}$	$3\frac{1}{8}$	$1\frac{9}{16}$	$1\frac{3}{16}$	$1\frac{1}{8}$
2	2.347	$5\frac{11}{16}$	$2\frac{7}{16}$	$3\frac{1}{4}$	$1\frac{5}{8}$	$1\frac{1}{4}$	$1\frac{3}{16}$
$2\frac{1}{8}$	2.467	$5\frac{7}{8}$	$2\frac{1}{2}$	$3\frac{3}{8}$	$1\frac{11}{16}$	$1\frac{1}{4}$	$1\frac{3}{16}$
$2\frac{1}{4}$	2.587	$6\frac{1}{8}$	$2\frac{5}{8}$	$3\frac{1}{2}$	$1\frac{3}{4}$	$1\frac{5}{16}$	$1\frac{1}{4}$
$2\frac{3}{8}$	2.794	$6\frac{5}{16}$	$2\frac{11}{16}$	$3\frac{5}{8}$	$1\frac{13}{16}$	$1\frac{3}{8}$	$1\frac{5}{16}$
$2\frac{1}{2}$	3.001	$6\frac{1}{2}$	$2\frac{3}{4}$	$3\frac{3}{4}$	$1\frac{7}{8}$	$1\frac{7}{16}$	$1\frac{5}{16}$
$2\frac{5}{8}$	3.124	$6\frac{3}{4}$	$2\frac{7}{8}$	$3\frac{7}{8}$	$1\frac{15}{16}$	$1\frac{7}{16}$	$1\frac{3}{8}$
$2\frac{3}{4}$	3.247	$6\frac{15}{16}$	$2\frac{15}{16}$	4	2	$1\frac{1}{2}$	$1\frac{7}{16}$
$2\frac{7}{8}$	3.367	$7\frac{1}{8}$	3	$4\frac{1}{8}$	$2\frac{1}{16}$	$1\frac{9}{16}$	$1\frac{7}{16}$
3	3.485	$7\frac{3}{8}$	$3\frac{1}{8}$	$4\frac{1}{4}$	$2\frac{1}{8}$	$1\frac{5}{8}$	$1\frac{1}{2}$
$3\frac{1}{4}$	3.698	$7\frac{3}{4}$	$3\frac{1}{4}$	$4\frac{1}{2}$	$2\frac{1}{4}$	$1\frac{11}{16}$	$1\frac{9}{16}$
$3\frac{1}{2}$	3.912	$8\frac{3}{16}$	$3\frac{7}{16}$	$4\frac{3}{4}$	$2\frac{3}{8}$	$1\frac{13}{16}$	$1\frac{11}{16}$
$3\frac{3}{4}$	4.125	$8\frac{5}{8}$	$3\frac{5}{8}$	5	$2\frac{1}{2}$	$1\frac{7}{8}$	$1\frac{3}{4}$
4	4.339	9	$3\frac{3}{4}$	$5\frac{1}{4}$	$2\frac{5}{8}$	$1\frac{15}{16}$	$1\frac{13}{16}$

ADJUSTABLE TAPS.

Purpose and Kinds of Adjustable Taps. — Adjustable taps are made for the purpose of permitting adjustment to a correct standard size. As the solid tap, on account of changes in hardening, cannot be depended upon to measure exactly the diameter for which it was intended, and because of the impossibility of preventing a solid tap from decreasing in diameter through wear, the adjustable tap has a wide field of usefulness where correct-sized nuts must be produced. The adjustable tap may either be made from a solid piece, split in a suitable manner to permit adjustments, or may be provided with inserted blades or cutters, which are so held in the tap body that a slight movement of these blades in the longitudinal direction of the tap moves the cutting points of the thread nearer or further from the axis of the tap, thus decreasing or increasing the diameter as the case may be.

Another cause for inserted blade taps besides adjustability may also be mentioned. The efforts constantly made by progressive manufacturers to decrease the cost of tools without impairing their efficiency have resulted in the designing of a number of taps of this type which permit cheaper grades of material to be used in the tap body, while the best quality steel may be used for the inserted blades, the total cost, especially in the case of large taps, being smaller than if the tap were made solid of ordinary tool steel throughout. Incidentally another advantage is also gained, in that, as the wear of the cutting portion of the tap is the only reason for discarding the tap, the inserted blade design makes it possible to retain the body proper and replace the cutters only.

In the case of large taps and coarse pitches the adjustable tap does not give very good satisfaction if a thread is cut by one passage of the tap, because the strain on the tap is so great as to spring it to a certain extent. It is evident that an adjustable tap cannot possibly be made quite as rigid as a solid tap. But in such cases the tap still retains its superiority as a "sizing" tap, used to finish the thread after it has been roughed out by means of an ordinary tap cut somewhat under size.

Examples of Adjustable Taps. — The form of adjustable taps, previously referred to, which is cut from a solid piece and split, is shown in Fig. 117. The body is split straight through; a nut with a taper thread serves to hold the tap together at the end, and a screw with a taper head is used to expand the tap, as shown. As the expansion is

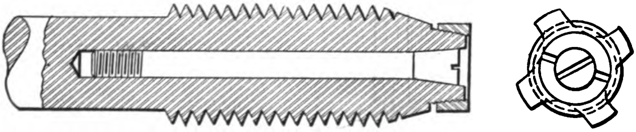

Fig. 117. Adjustable Tap Made from Solid Stock

effected by bending the cutting lands as the tapered head of the screw travels inward, the thread form is not accurately retained and the tap is not to be recommended. When accurate work is required the inserted blade form of adjustable taps is the preferable form.

The requirements for a good inserted blade tap are that the blades when bound in place shall be practically solid with the body; that the design shall permit a liberal adjustment in regard to size; that this adjustment shall be easily accomplished; and that the means employed for binding and adjusting the blades shall not be of such a kind as to prevent the use of the tap in any case where the solid tap could be used. This latter requirement involves the possibility of tapping clear through a hole as well as the tapping down to the bottom of a hole.

A tap which fills fairly well all these requirements with the exception of the one mentioned last is shown in Fig. 118. The blades are held in place by nuts, beveled on the inside to fit the tapered ends of the blade. In this manner the blades are prevented from longitudinal motion as well as from moving out or in in relation to the center line of the tap. The blades fit into slots in the tap body and are thus prevented from moving sideways. The adjustment is provided for by the tapered bottom of the slots in the body, by means of which the cutting size of the tap increases when the blades are moved upward toward the shank end of the tap. The adjustment is easily accomplished, it only being required to loosen the upper nut and push up the blades, and then tighten the lower as well as the upper nut solidly upon the blades. It is, however, not possible with the design shown to tap down clear to the bottom of a hole, nor is it possible to tap straight through a hole. This latter requirement could, of course, be easily obtained by making the slots deeper and the blades wider, thus making it possible to decrease the outside diameter of the upper binding nut so that it would be less than the root diameter of the thread. This would permit the tap to pass clear through a threaded hole.

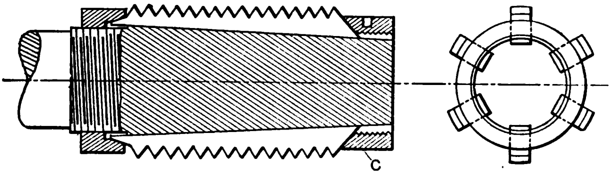

Fig. 118. Adjustable Tap with Inserted Blades

There is, however, a more serious objection to this design. The backing of the blade by means of a tapered surface in the nut is not very positive, and the blades are liable to be a trifle incorrect in their relative position in regard to lead. It is evident that if that is the case the thread cut will be incorrect in its shape, the space cut being wider than the thread itself in the nut. A tap which overcomes the objections raised in regard to the tap in Fig. 118 is shown in Fig. 119.

Pratt and Whitney Company Adjustable Tap. — This tap consists of body, blades and binders, and a thrust nut and a check nut mounted on a threaded part of the body.

On comparatively small sizes of taps the end of the body is turned down to fit a hole in the shank, as shown in the lower view, Fig. 119. The shank is then driven into place and secured by a taper pin. On larger sizes the shank is made solid with the body as shown in the upper view. This difference in design is necessitated by the construction of the tap. The shank if made solid with the body must obviously be below not only the root diameter of the tap itself but also below the root diameter of the portion on the body threaded for the thrust and check nut, as otherwise these nuts could not be put in place. On small taps this would require a diameter of shank altogether too small compared with the diameter of the tap. In such cases, therefore, the body is driven into a shank of larger diameter than would otherwise be possible to use.

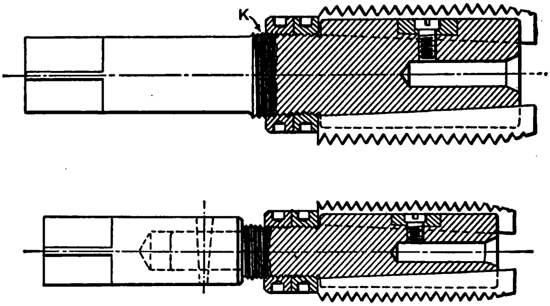

Fig. 119. Pratt and Whitney Company's Design of Adjustable Tap

The body is slotted longitudinally to receive the blades, and has a circular groove all around to receive the binders. The latter are, by means of small screws threaded into the body, pressed firmly against a shoulder formed by a small groove in the blades, as shown plainly in the enlarged view of the binding arrangement in Fig. 120. The hole shown at the front end of the tap extending at the center of the tap for some distance inward is for providing clearance for the taps when tapping the binder screw holes. The blades are squared off at the upper end to rest solidly against the thrust nut. As it is important that each blade be placed in a correct position in relation to the others, each blade being a certain amount ahead of the next preceding one in regard to lead for the purpose of securing a continuous thread around the tap, it is customary to replace all the blades at once, preferably threading them in the tap body itself or in a master holder similar to the tap. It is evident that it would be difficult to replace single blades, as the replaced blade would hardly come in such a position in relation to the others as to produce a perfect continuous thread all around the tap.

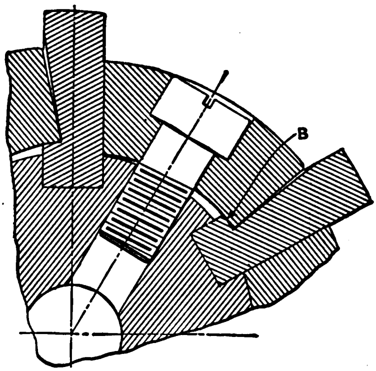

Fig. 120. Method of Binding the Blades in the Tap in Fig. 119

As the thrust nut only locates the blades longitudinally, the binders are relied upon altogether for holding the blades down. For this reason the binder is placed near the center of the blade. In the case of a reamer constructed on this same principle the binder is placed nearer the front end, as in a reamer there is no objection to beveling the thrust nut on the inside in a manner similar to that used for the inserted blade tap formerly described. This beveling of the nut and tapering of the upper end of the blade will, of course, hold the blade very securely in place, but cannot, for the reasons previously given, be adopted in a tap of good design.

The binders are made from a solid ring which is turned, chucked, reamed, and has the screw holes drilled and counterbored before the ring is cut into pieces. This tap fills all the requirements mentioned at the beginning of the discussion of inserted blade taps. When the binders are tightened against the shoulder in the blade, and the nuts are screwed tightly up against the end of the blades, the blade at the same time fitting the slot in the body snugly, there is no possible chance for the blade to move. The tapered bottom of the slots in the tap body provides for the adjustment the same as in the case of the inserted blade tap previously described. When the tap is to be expanded, the binder screws are loosened and the nuts at the upper end of the blades are screwed back. The blades can then be moved upward as far as necessary for obtaining the desired size, and the nuts and binders are again tightened. The ease of accomplishing this adjustment is apparent. No parts of the tap used either for binding or adjustment project outside of the tap at the end. Nor does any detail project beyond the root diameter of the thread in the tap. Thus the tap can pass entirely through a hole as well as tap clear down to the bottom of a hole, provided only a short chamfer is given to the thread. Very few taps of the adjustable or expansion type fill the given requirements as well as does this one. Of course, this is not intended to mean that the design which we have described to some extent in detail is the only one possible which will fill the requirements outlined. There can, of course, be a great deal of variation in the design, and the example chosen is selected simply because it embodies all the features which are of importance. Taps of this construction are manufactured by the Pratt and Whitney Company. Inserted blade taps do not adapt themselves to very small sizes of taps. As a rule, it should not be attempted to make such taps of sizes smaller than 1½ inches or at least not below 1¼ inches in diameter.

Other Examples of Inserted Blade Taps. — In Fig. 121 an inserted blade tap of a design common for pipe taps

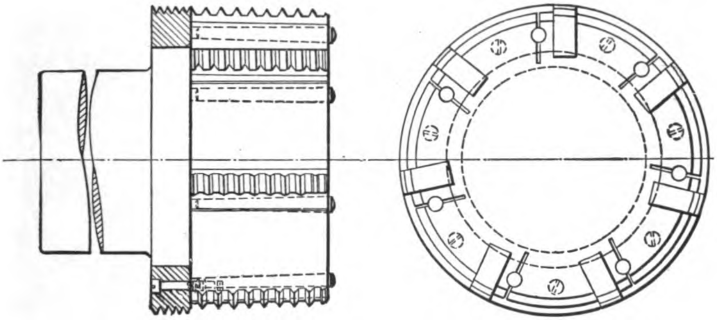

Fig. 121. Inserted Blade Pipe Tap

is shown. Here the chasers are held in place by means of taper pins which wedge the metal of the body firmly against the blade. The correct location of the blades in a longitudinal direction is obtained by means of a ring held to the body by screws. It is plainly seen from the construction that this tap is not intended to be adjustable, but is simply made with inserted blades from an economical point of view. This design being most commonly used for large taps affords a considerable saving in material. The tap shown in the cut is provided with interrupted thread as commonly used on pipe taps and taper taps in general.

Another form of inserted blade tap is shown in Fig. 122. The blades are here held in place by means of a ring threaded on the inside to fit the thread of the blades or chasers, and split and provided with binding screws so as to make possible a positive grip over the blades. The advantage of this design is that the threads of the various chasers must necessarily be so located as to form a continuous helix all around the tap, inasmuch as the threaded ring fits upon the thread in the chasers. But the design is open to the objection that the ring prevents threading as far down in a hole as may sometimes be required, and the ring may interfere with lugs or projections in the piece to be threaded. In this respect the former of the two taps last described is superior, as it is free from any outside incumbrance and takes up no more room than a solid tap.

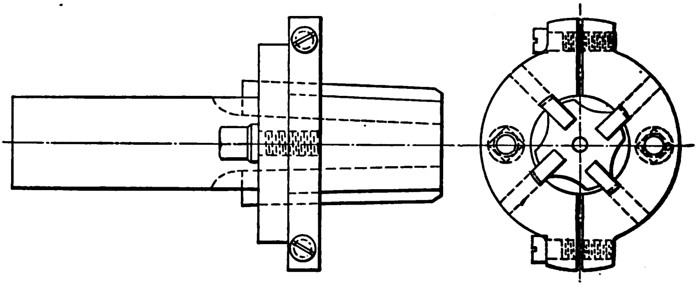

Fig. 122. Burritt's Design of Inserted Blade Pipe Tap

KIND OF STEEL USED FOR TAPS.

Ordinary carbon steel or tool steel should be used for all kinds of taps. It is advisable to use a higher grade, or at least a tougher kind, of steel for machine taps and stay-bolt taps than for other kinds as they are subjected to heavy twisting strains.

While high-speed steel has proven itself to be of great usefulness for cutting tools of general description such as lathe and planer tools, drills, etc., it has not as yet proven practicable to make such tools as taps, threading dies, and chasers, which cannot be ground after hardening, of this material. The reason for this is that most grades of high-speed steel have to be heated to such a high temperature when hardening that the sharp edges of the tools to be hardened are practically melted away, and as a rule, unless the tool is of such a construction that it can be ground after hardening, it is almost useless for cutting purposes. It is not to be inferred from this that it is impossible to make taps and threading dies from high-speed steel, but the difficulties encountered in trying to successfully harden these tools are such that prominent manufacturers hesitate to undertake the making of tools, that cannot be ground after hardening, from this material.

The substitution of machine steel for purposes for which carbon steel was formerly employed is one of the improvements about which little is heard. Nevertheless, some large concerns use it almost exclusively for dies, taps, and other cutting tools which require toughness as well as hardness. A machine-steel tap when skillfully case-hardened will cut as freely and is said to wear practically as well as one of carbon steel. Besides being cheaper to make, it will not snap off suddenly when subjected to undue stress. It is said that the Singer Manufacturing Company use little carbon steel in their Elizabethport works, and that all punches, dies, taps, etc., are generally made from machine steel, case-hardened.

CHAPTER VII.

THREADING DIES.

It is undoubtedly true that there is, as a rule, a great deal more said in the technical press as well as in text-books on tool-making about making taps than there is about making threading dies. The reason for this is probably that while the principles governing tap-making are fairly well settled and agreed upon, those appertaining to the making of threading dies are not so well defined. Besides, dies are not made in such variety as are taps, nor do they differ from one another very materially, providing we except the spring screw threading die. However, the die is used for external thread-cutting just as often as the tap is used to thread the corresponding nut, and for this reason threading dies ought to be given a place equally prominent with taps in the manufacture of shop tools.

Spring Screw Threading Dies.

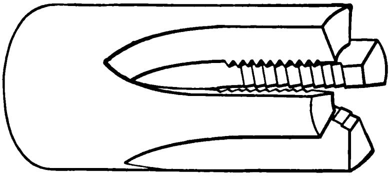

Fig. 123. Spring Screw Threading Die

At present no threading dies are used to such a great extent as are spring screw threading dies, Fig. 123. The increasing importance of automatic screw machines has been the one great factor which has added most to the demand for this class of dies. There is, however, still a great deal to wish for in regard to the making of these dies, as at present they are not manufactured exactly as they ought to be. A simple analysis will bear out this statement.

Requirements of a Threading Die. — There are in general three main requirements for a threading die. The cut should be smooth and clean, the thread should be of a perfect form, and the threaded piece should be of the exact diameter required. In order to obtain this there are several points to be taken into consideration.

In the first place it must be observed that a die with a thread cut perfectly straight or parallel would act exactly the same as a tap without back taper, that is, a tap having the same angle diameter at the shank end as at the point. This question in relation to taps was mentioned in a previous chapter in connection with the relief of taps. The trouble encountered in using taps made without back taper will also appear in dies made in the same manner. To overcome the difficulties arising, and in order to give to the die a certain amount of back taper, usually called clearance, dies for the market are generally made a certain amount over the size required, and then the size to be cut is obtained by means of an adjusting collar, forcing the prongs of the die down sufficiently to produce the correct diameter required on the piece to be threaded. This will, of course, give the die a certain back taper, the amount of which will depend upon the amount over the actual size the die was originally made. The collar being applied at the front end of the die, will evidently spring the prongs more at the point, where it is applied, than further up, nearer the solid part of the die. This is the general procedure of making spring screw dies for the market, and we will now analyze the results, and see whether this die fills our three main requirements mentioned above.

The die has ample clearance and will almost invariably produce a smooth, cleancut thread. The size of the thread on the threaded piece can also be exactly correct, as the adjusting collar, usually called clamp collar, can be so adjusted as to give any size wished for within certain limits.

Shortcomings of the Commercial Spring Screw Die. — The form of the thread, however, will not be perfect, as can readily be seen from the cut, Fig. 124, where the case is shown exaggerated. By bending the prongs inward the thread will evidently not move inward at right angles to the axis of the die, but will move along an arc, thus causing the thread to be of incorrect angle in the piece cut, one side of the thread making an angle of more, and one an angle of less than 30 degrees with the axis.

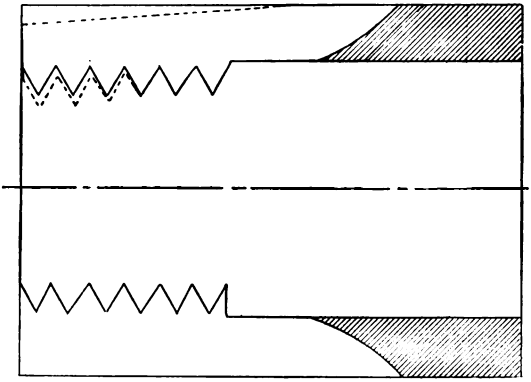

Fig. 124. Distortion of Thread Form in Spring Screw Dies of Usual Design when Adjusted

That this inaccuracy is of importance is even more evident if we refer to a die with a thread form such as shown in Fig. 125. Here the angle of the thread is very slight, and consequently, the bending of the prongs is distorting the thread-form still more. The piece threaded by adjusting a die of this class in this manner can never be expected to fit very well into a nut provided with a correct thread.

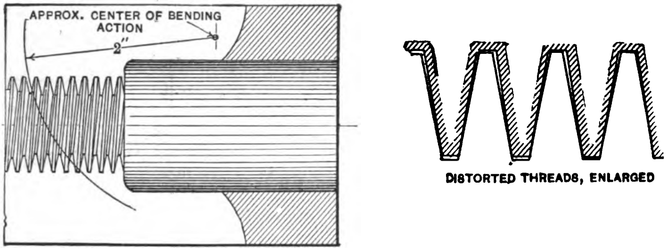

Fig. 125. Spring Screw Die with Special Threads, and Result of Adjustment

Preferable Method of Making Spring Screw Dies. — In order to eliminate the error produced by the closing in of the prongs for adjustment by means of a clamp-collar and still maintain the necessary back taper or clearance, the correct size should originally be at the front end of the die, and the diameter of the thread in the die should gradually increase backward, that is, the die should be made with back taper from the beginning. On large sizes this is, of course, very easily accomplished by setting over the taper bar of the machine where the die is chased out an amount equal to the amount of back taper desired. On small sizes, however, this is impractical, and on very small sizes absolutely impossible. Therefore, in order to obtain a die made in a way that will produce the results required, the die must be tapped out from the back end with a tap that has been cut with the taper required in the die.

The amount of the clearance mentioned should vary according to the kind of metal the die is to be used upon, the clearance being greater for brass than for steel. Opinions vary as to what is the best amount of back taper to give to a die. While some consider that a clearance of 0.003 inch per inch is ample for cutting steel or iron, and 0.005 inch per inch for brass, others claim that one might give even as much as 0.010 inch per inch clearance for steel and iron, and 0.015 inch per inch for dies cutting brass, copper and metals of similar structure. It may be safe to say that any figure between the extreme limits given above will prove satisfactory, and that the exact amount of clearance is comparatively unimportant.

A die made according to the last mentioned method would, when new, cut a perfectly correct thread. Suppose now that the die should wear, and in order to obtain the correct size of the thread the adjusting collar had to be tightened. In such a case a slight error in the form of the thread would occur, on the grounds mentioned previously, but considering the way in which this die is made, the error is reduced to a minimum. In fact, it is easily seen, that the maximum error, when a die of this kind is almost worn out, cannot be any greater than the minimum error occurring in a new die with the same length of thread cut straight, and made a sufficient amount oversize to produce the same amount of back taper by forcing the prongs in at the point.

The reason for continuing to manufacture spring screw dies in the old manner, when the superiority of dies made according to the system outlined is well known by manufacturers, is one merely of expense. It would make the die more expensive to grind on the outside, true with the thread, as a taper arbor would be more difficult to make than a straight arbor, but it is unquestionable that the increase in expense is very slight if compared with the superior qualities of the die. The grinding of the outside of the die should never be overlooked by those desiring a good die, especially if a solid holder is used. It must, however, be admitted that most dies made for the market are not ground on the outside, a fact of which most users probably are painfully aware, as it takes a great deal of experimenting and attention to produce desirable results with dies where the thread is not true with the outside. It also seems unnecessary to spend so much time and care in producing a good thread in the die, and then to overlook a factor equally important to accomplish perfect results.

Objections to the Method Described. — It has been objected that it is rather difficult to grind the outside of spring screw threading dies, particularly the outside of small dies. It is true that it is difficult to grind some sizes of dies, but certainly not impossible even under manufacturing conditions. The advantages gained would be fully worth the cost of trying to conquer the difficulties. As shown in Fig. 126, the die should be held on a taper threaded arbor, corresponding to the taper in the die, but the whole length of the die should not be ground at once. There would, however, be no difficulty in grinding the die from the point upward for a length about equal to the length of the thread in the die, as the arbor and the die for that distance are practically one solid piece and are well supported by the centers of the arbor, which of course should not project outside of the die more than necessary. When this is done the die should be taken — with the arbor still in place in the die

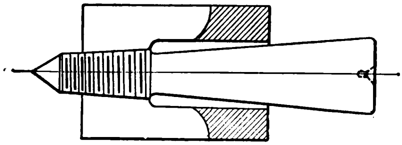

Fig. 126. Spring Screw Die Mounted on Threaded Arbor for Grinding

— and put into a machine equipped with a drawback mechanism and a spring collet or step chuck (Fig. 127). The die is then, of course, held by the outside of the already ground portion of same, and the back can if necessary be supported by the center of the arbor. Any one making a business of manufacturing spring screw threading dies would find this operation very inexpensive. The matter of cost is particularly pointed out in this connection, as it has been claimed that it would be too expensive in ordinary manufacturing to grind spring screw dies on the outside. But if we consider that a die not ground on the outside after hardening must be made from either drawn wire of the correct required size or made from rough stock, which before being made into die blanks had to be turned and ground, the question gets a different aspect. A die ground on the outside after hardening is made from rough stock, rough turned and ready for grinding after hardening. Right here we have a saving of either the difference in price of drawn wire and rough stock or the saving of the cost of grinding the soft blanks. If we add to this saving the time saved in not having to be so extremely particular in making the tapped hole run perfectly true with the outside of the die as we have to be if the die is not to be ground on the outside after hardening, we have quite an item to deduct from our grinding expenses after the dies are hardened. As regards the difference in the expense in making the die taps and

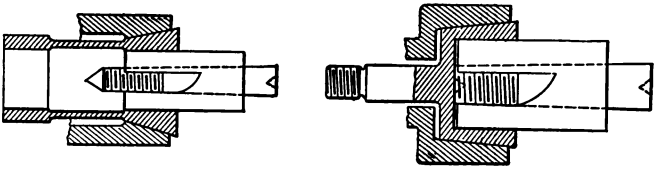

Fig. 127. Grinding the Outside of Spring Screw Dies

hobs there is none. The only increase is the expense of making the arbor used when grinding the outside of the die, but when considering that this arbor is made exactly the same and at the same time as the hob, the expense is reduced to a minimum.

Clamp Collars. — Another point of great importance in making spring screw dies cut correctly is the way in which the prongs or lands of the die are being adjusted to cut the proper size. The clamp collars generally used for this are nothing but split steel rings. The adjustment is secured by means of a screw, and it is readily seen from the cut, Fig. 128, that the action of the steel collar on the prongs of the die is not uniform, that is, it will not give an equal pressure to the various prongs. The prongs *A* and *B* will be forced in more than the prongs *C* and *D*. The result of this will be a die with its thread out of round, and all the care and precautions taken in making a perfect die have become useless by the use of improper means for adjusting the prongs. Being out of true the die cannot have all the prongs cutting, which of course is essential in producing good results.

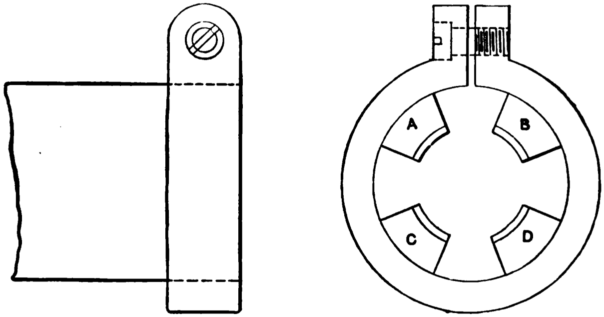

Fig. 128. Usual Form of Clamp Collar for Spring Screw Dies

The only correct principle to apply for adjusting the prongs is a solid ring which will evenly force all the prongs equally toward the center. This can be accomplished by making a solid steel ring with the hole tapered, and tapering the fluted end of the die to suit the taper in the ring.

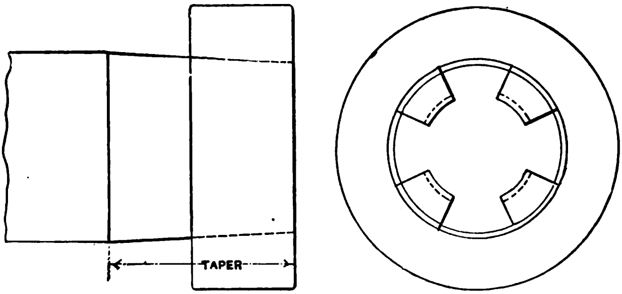

Fig. 129. Taper Collar for Adjusting Spring Screw Dies

(See Fig. 129.) The amount of taper in the ring and on the prongs will be directly dependent upon the adjustment wanted in the die.

As, however, this taper ring would require all dies to be

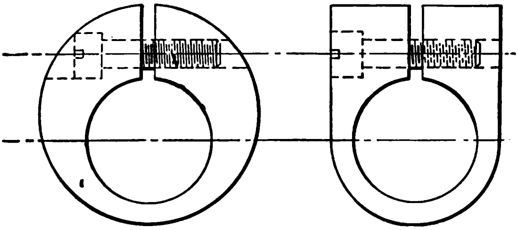

Fig. 130. Special Types of Clamp Collars

tapered towards the point it has not met with general acceptance. There have been, instead, attempts to improve upon the old style of clamp collar. In Fig. 130, two such improvements are shown. The one to the left actually does embody a decided improvement on the old form, but whether the one shown to the right is superior in any respect may be open to discussion.

Fluting. — Spring screw dies are generally made with four flutes, but experience has taught that a die of this kind will almost invariably have only two lands cutting. A die with three flutes, however, will, even if slightly out of true on account of spring in the hardening, have the three lands cut evenly, and three flutes are therefore to be recommended. There is also another advantage gained by giving a die only three flutes. The lands become wide and stiff, while the chip-room may still be equally large or even larger. It may be said as an objection to wide lands that they will necessarily produce more friction between the die and the piece to be cut. This can easily be overcome by milling the prongs as shown in Fig. 131.

When fluting, the kind of material upon which the die is to be used should also be considered. If the die is to be used on soft metals, such as brass, the cutting face of the prongs is usually made to come a small amount back of the center, while on dies used for steel or iron the cutting face is radial.

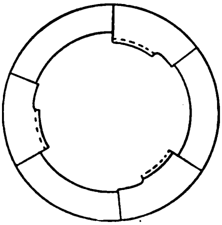

Fig. 131. Three-fluted Die with Lands Relieved to Reduce Friction

Fluting Cutters. — If the die is made with three flutes, these should be cut with a 60-degree angular cutter. If made with four flutes, however, the cutter should be 48, 45 or 40 degrees according to the size of the die, the 48-degree cutter being used for the smallest dies, and a 45-degree cutter for all ordinary sizes. Dies one-half inch in outside diameter or smaller are usually never made with more than three lands.

Hardening Spring Screw Dies. — The principal troubles encountered in the manufacture of spring screw threading dies are due to difficulties in hardening. In the first place the lead is liable to be incorrect, due to the shortening of the prongs in hardening. This difficulty is so much the more pronounced as the prongs may alter differently from one another, in which case the die may be perfectly useless. In the second place the prongs may spring out of shape in the form of a curve outward, as shown exaggerated in Fig. 132. In the third place they may twist, as shown in Fig. 133. That in either case a good thread cannot be cut with the die is obvious. In the case of the prong springing out in a curve all the beneficial effect of the back taper would be lost. In the case of the prong twisting, the contact with the piece to be threaded is not on the cutting edge of the teeth, but back of it, causing a drag which always makes a rough thread and is very likely to break off the screw to be threaded.

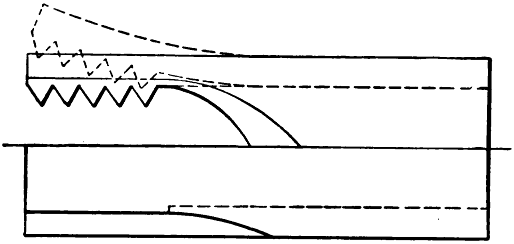

Fig. 132. Exaggerated View of Prong of Die Sprung Outward in Hardening

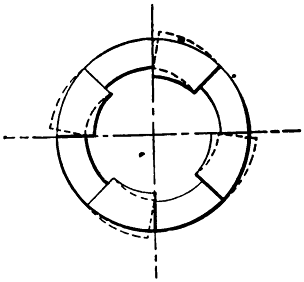

Fig. 133. **Prongs of Die Twisted in Hardening**

In order to eliminate as much as possible these effects of hardening it is well to take care not to heat the die back of the line *ab* in Fig. 134, and not to heat it any more than so that it will harden only to the line *cd* at the end of the thread. It is, however, even more effective for preventing the die from springing out of shape in hardening not to flute right through the metal into the hole, but to leave a small amount to be removed when grinding the flutes after the die has been hardened and finish ground on the outside. The temper should be drawn to about 430° F.

Chamfer of Threads. — The only point now remaining to be considered is that of the chamfer, which is, of course, greatly dependent upon the class of work to be done. It is evident that the longer chamfer, or taper on the top of the threads, one can allow in a die, the better results will be obtained, as it is obvious that a greater number of teeth will then do the cutting, and each tooth will have less to remove. The result will be a smoother thread. For general use one must, of course, settle upon a certain length of chamfer. The practice is to chamfer about three threads, if the die is not expected to cut close to a shoulder. In the latter case, one, or at most one and one-half thread of chamfer must suffice.

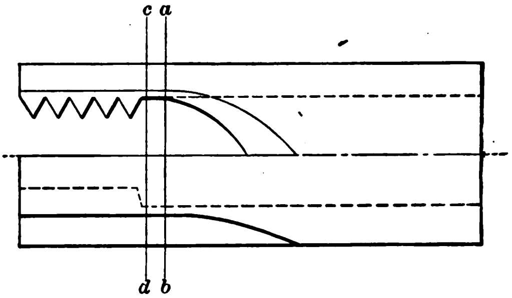

Fig. 134. Directions for Hardening Spring Screw Dies

Dimensions. — The length of the threaded part of a spring screw die should be directly depending upon the pitch of the thread. It is common practice to make the length of the thread equal to about 7 times the pitch. In Table LXXVI, the length of thread for various pitches is given.

TABLE LXXVI.

LENGTH OF THREAD IN SPRING SCREW DIES FOR VARIOUS PITCHES.

No. of Threads per Inch.	Length of Thread.	No. of Threads per Inch.	Length of Thread.	No. of Threads per Inch.	Length of Thread.
40	$\frac{3}{16}$	16	$\frac{7}{16}$	8	$\frac{7}{8}$
36	$\frac{7}{32}$	14	$\frac{1}{2}$	7	1
32	$\frac{1}{4}$	13	$\frac{9}{16}$	6	$1\frac{3}{16}$
28	$\frac{9}{32}$	12	$\frac{5}{8}$	$5\frac{1}{2}$	$1\frac{5}{16}$
24	$\frac{5}{16}$	11	$\frac{11}{16}$	5	$1\frac{7}{16}$
20	$\frac{3}{8}$	10	$\frac{3}{4}$	$4\frac{1}{2}$	$1\frac{9}{16}$
18	$\frac{13}{32}$	9	$\frac{13}{16}$	....	....

The outside diameters of spring screw dies are made in certain standard sizes. It is difficult to say what outside diameter should correspond to a certain diameter of thread, as practice differs quite widely. In Table LXXVII dimensions are given for spring screw dies which will be found to embody the average practice very accurately. The length of the flute should be about three-fifths of the length of the die.

Sizes of Hobs for Spring Screw Dies. — It has been previously mentioned that while a superior die is produced by threading the die with a taper hob from the back, the general practice is still to tap the dies with straight taps a certain amount oversize. The amount which the die taps should be made oversize for different pitches when the dies are produced in the latter manner is stated in Table LXXVIII.

TABLE LXXVII.

PROPORTIONS OF SPRING SCREW THREADING DIES.

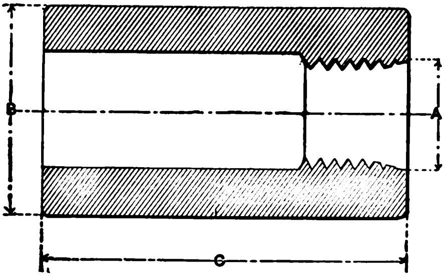

Fig. 135

Diameter of Cut.	Outside Diameter.	Length.	Diameter of Cut.	Outside Diameter.	Length.
A	*B*	*C*	*A*	*B*	*C*
$\frac{1}{8}$	$\frac{1}{2}$	$1\frac{1}{4}$	$\frac{3}{4}$	$1\frac{3}{8}$	$2\frac{1}{2}$
$\frac{3}{16}$	$\frac{1}{2}$	$1\frac{1}{4}$	$\frac{3}{4}$	2	3
$\frac{1}{4}$	$\frac{1}{2}$	$1\frac{1}{4}$	$\frac{7}{8}$	2	3
$\frac{1}{4}$	$\frac{3}{4}$	$1\frac{3}{4}$	1	2	3
$\frac{5}{16}$	$\frac{3}{4}$	$1\frac{3}{4}$	$1\frac{1}{8}$	2	3
$\frac{3}{8}$	$\frac{3}{4}$	$1\frac{3}{4}$	$1\frac{1}{4}$	2	3
$\frac{3}{8}$	1	2	$1\frac{1}{8}$	$2\frac{1}{2}$	$3\frac{1}{2}$
$\frac{7}{16}$	1	2	$1\frac{1}{4}$	$2\frac{1}{2}$	$3\frac{1}{2}$
$\frac{1}{2}$	1	2	$1\frac{1}{2}$	$2\frac{1}{2}$	$3\frac{1}{2}$
$\frac{1}{2}$	$1\frac{3}{8}$	$2\frac{1}{2}$	$1\frac{3}{4}$	$3\frac{1}{4}$	4
$\frac{9}{16}$	$1\frac{3}{8}$	$2\frac{1}{2}$	2	$3\frac{1}{4}$	4
$\frac{5}{8}$	$1\frac{3}{8}$	$2\frac{1}{2}$	$2\frac{1}{4}$	$3\frac{1}{4}$	4

Dimensions of Clamp Collars. — As has been said already, the clamp collar shown in Fig. 136, although not the best, is the one most commonly used. In Table LXXIX dimensions for these clamp collars are given corresponding to the diameters of dies given in Table LXXVII. In order to facilitate the design of intermediate sizes a set of approximate formulas for determining the relation between the dimensions is given below. The various dimensions denoted by the letters are seen from Fig. 136.

TABLE LXXVIII.

OVERSIZE OF TAPS FOR HOBBING SPRING SCREW DIES WHEN CUT STRAIGHT.

No. of Threads per Inch.	Oversize.	No. of Threads per Inch.	Oversize.	No. of Threads per Inch.	Oversize.
$4\frac{1}{2}$	0.015	12	0.006	28	0.004
5	0.013	13	0.006	30	0.004
$5\frac{1}{2}$	0.012	14	0.005	32	0.004
6	0.010	16	0.005	36	0.004
7	0.008	18	0.005	40	0.003
8	0.007	20	0.005	48	0.003
9	0.007	22	0.005	56	0.003
10	0.006	24	0.004	64	0.002
11	0.006	26	0.004	72	0.002

TABLE LXXIX.

DIMENSIONS OF CLAMP COLLARS FOR SPRING SCREW THREADING DIES.

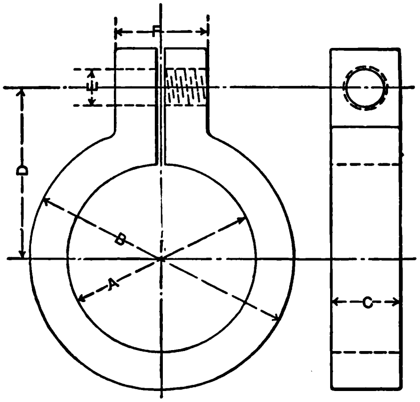

Fig. 136

A	*B*	*C*	*D*	*E*	*F*
$\frac{1}{2}$	$\frac{3}{4}$	$\frac{5}{16}$	$\frac{13}{32}$	$\frac{5}{32}$	$\frac{7}{16}$
$\frac{3}{4}$	$1\frac{1}{16}$	$\frac{3}{8}$	$\frac{9}{16}$	$\frac{3}{16}$	$\frac{1}{2}$
1	$1\frac{3}{8}$	$\frac{7}{16}$	$\frac{23}{32}$	$\frac{1}{4}$	$\frac{5}{8}$
$1\frac{3}{8}$	$1\frac{13}{16}$	$\frac{9}{16}$	$\frac{31}{32}$	$\frac{5}{16}$	$\frac{3}{4}$
2	$2\frac{5}{8}$	$\frac{11}{16}$	$1\frac{3}{8}$	$\frac{7}{16}$	1
$2\frac{1}{2}$	$3\frac{1}{4}$	$\frac{13}{16}$	$1\frac{5}{8}$	$\frac{1}{2}$	$1\frac{3}{16}$

The formulas are:

$$B = 1\tfrac{1}{4}A + \tfrac{1}{8} \qquad E = \tfrac{3}{16}A + \tfrac{1}{16}$$

$$C = \tfrac{1}{4}A + \tfrac{3}{16} \qquad F = \tfrac{3}{8}A + \tfrac{1}{4}$$

$$D = \tfrac{5}{8}A + \tfrac{3}{32}$$

ROUGHING AND FINISHING SPRING SCREW DIES.

In order to obtain uniform and well-finished threads when cut with spring-screw threading dies it is well known that it is necessary to use two dies, one for roughing and one for finishing the thread. In general practice the roughing die is obtained simply by adjusting a regular spring screw die of standard size to cut a certain amount oversize. This, of course, answers the purpose well enough for most classes of work for which this kind of die is used. It is evident, however, that there is no great certainty as to the relative amount of metal removed by each die, and it is most probable that the roughing die, at least on larger sizes, is doing far more than its fair portion of the work, leaving but a small amount of metal for the finishing die to remove. The latter die should, of course, not perform as heavy a duty as the former, but it is considered as a fair proportion to let the roughing die remove two-thirds and the finishing die one-third of the total amount of metal to be removed. In order to obtain such a proportion some firms who perform very close work by means of spring-screw dies make special roughing dies, enough over size to permit the finishing die to cut the predetermined amount of the thread. These roughing dies are provided with perfectly-shaped threads, simply hobbed out with a tap which is the desired amount oversize on the top as well as in the angle of the thread. In this manner the finishing die will remove a certain amount of metal both on the top and in the angle, thus finishing the whole thread perfectly smooth and to the correct form.

It must, of course, be determined how much oversize the roughing die is required in order to leave one-third of the metal to be removed by the finishing die. This can be expressed in a simple formula with the pitch of the thread as the variable. In Fig. 137 the relative amounts of metal removed by the respective dies are shown in a diagram; we have here a United States standard thread where the amount of metal represented by the area *ABDC* is to be removed by the roughing die and the area *BEFGHACD* by the finishing die. The derivation of the formula we wish to obtain is as follows:

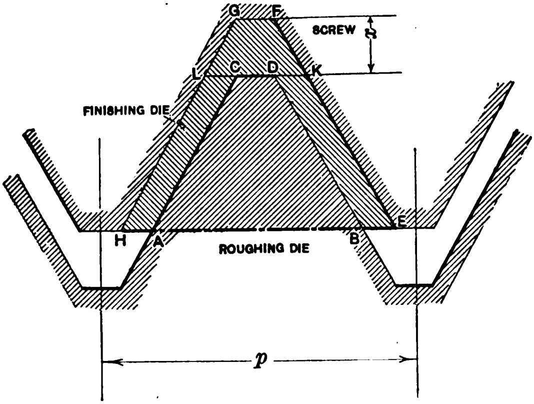

Fig. 137. Diagram of Metal Removed, United States Standard Thread

Formulas for U. S. Standard Thread. — The area of a section of a full V thread with the pitch p is

$$\frac{1}{2}p^2 \times \cos 30°.$$

Subtracting from this the amounts

$$\frac{1}{2} \times \frac{1}{64}p^2 \times \cos 30°, \text{and} \frac{1}{2} \times \frac{1}{64}p^2 \times \cos 30° + \frac{7}{64}p^2 \times \cos 30°,$$

which represent the areas deducted from a full V thread in order to obtain the area of a section of a United States standard thread, we find this latter area to be

$$\frac{3}{8}p^2 \times \cos 30°.$$

Consequently the amount of this sectional area to be removed by the roughing die is

$$\frac{1}{4}p^2 \times \cos 30°,$$

and the amount to be removed by the finishing die

$$\frac{1}{8}p^2 \times \cos 30°.$$

Referring to Fig. 137 we therefore arrive at the following equation:

$$\frac{1}{2}\left(\frac{7}{8}p - 2x \times \tan 30°\right)^2 \cos 30° - \frac{1}{2} \times \frac{1}{64}p^2 \times \cos 30°$$
$$= \frac{1}{4}p^2 \times \cos 30°.$$

Solving this equation gives $x = 0.135\ p$ approximately. The diameter of the tap with which the roughing spring-screw die is to be produced should thus equal the standard diameter plus two times $0.135\ p$. This refers to United States standard threads.

Formulas for Sharp V thread. — For the same proportions between the amount of metal removed by each die, if a full V thread is to be cut, the formulas are, of course, derived in the same manner, but have a different aspect. The area of a section of the thread is

$$\frac{1}{2}p^2 \times \cos 30°.$$

The amount of sectional area to be removed by the roughing die is consequently

$$\frac{1}{3}p^2 \times \cos 30^\circ.$$

Referring to Fig. 138 we arrive at the following equation:

$$\frac{1}{2}\left(p-2\,x\times\tan 30^\circ\right)^2 \cos 30^\circ = \frac{1}{3}p^2 \times \cos 30^\circ.$$

Solving this equation gives $x = 0.160$ approximately. Using this value, the diameter of the roughing die is now easily determined.

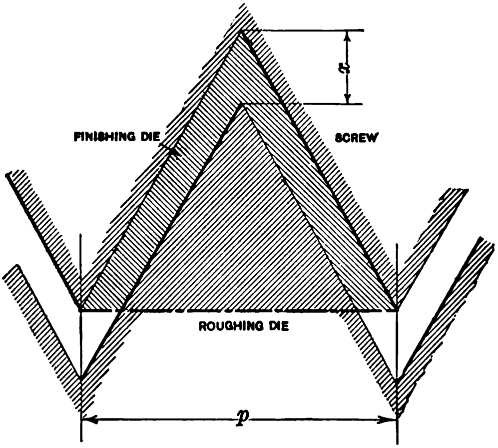

Fig. 138. Diagram of Metal Removed, Standard Sharp V Thread

If we wish to give formulas for the results obtained, we can express them in the following manner:

For the United States standard thread, $R = D + 0.27\,p$.

For sharp V thread, $R = D + 0.32\,p$, in which formulas

R = diameter of roughing die,

D = standard diameter of finishing die, and

$$p = \text{pitch} = \frac{1}{\text{number of threads per inch}}.$$

It is, of course, of no great importance if the amount removed by each die is somewhat different from the values given, the amounts to be removed being arrived at in a purely arbitrary way from the beginning. But the proportions given conform to the practice of a prominent tool-manufacturing firm, and the calculations are given to show that even in a domain largely given over to "guesswork" there can be exact calculations made and adhered to. In tool-making, as a rule, calculations form a very small part, and altogether too often is "a few thousandths over" or "a few thousandths under" considered the only way to determine certain values which, if once settled upon, could be formulated by simple figuring so as to serve as a permanent guide for the tool-maker. It is a mistake to think that tool-making is so widely different in its nature from other fields of industrial progress that here no strict rules can be followed. It must be admitted that there is perhaps no field of mechanical achievement where opinions differ so widely as they do in regard to tool-making. But that is no reason for continuing to consider tool-making as a business in which no principles or rules can be concentrated in simple formulas arrived at in a logical and common-sense manner.

VARIOUS CLASSES OF THREADING DIES.

We have in the preceding pages given particular attention to one class of dies in the same manner as in the case of taps we devoted ourselves most particularly to one class of taps, hand taps. The same fundamental principles, of course, hold good for all kinds of dies as were pointed out with reference to spring screw threading dies. We can therefore in the following summarize our statements, and shall only dwell upon the more important points in regard to other classes of dies.

The remaining kinds of dies may be divided into three general classes — solid dies, which may be either square or round as shown in Fig. 139; adjustable split dies, which usually are round; and inserted chaser dies, where the blades, provided with the cutting teeth, are inserted in a body and secured in some suitable manner.

Solid Dies.

The solid die is used to a great extent on general work, either in cases where a correct size is not essential or for roughing a thread before taking a finishing cut with an adjustable die. The solid die is not preferable to use when threads are to be cut requiring a high degree of accuracy. In the first place, the size when the die is hardened cannot be depended upon to be exactly the size wanted, as dies are very apt to "go" more or less in hardening, and, on account of their construction, to "go" in an irregular manner, one land closing up or departing more from the true axis of the thread than the others. In the second place, even if the die were correct from the beginning, there are no provisions for adjusting it to size when worn.

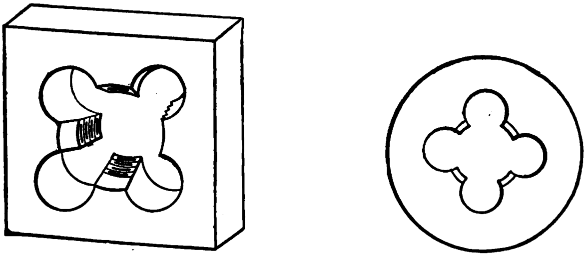

Fig. 139. Square and Round Solid Dies

Solid Square Dies. — The solid die, as a rule, is of a square form. It is used principally for threading in bolt cutters, and for work of this kind answers its purpose well. It is also used for pipe dies. In this case the thread evidently must be tapered. As a tapered thread in order to cut a thread smoothly and correctly requires to be relieved in the angle, and as the difficulties of relieving an internal thread like that of a pipe die are very great and it is not customary to do so, pipe dies, and, of course, also all other taper dies, cannot be used for cutting the threads of taps, but can only be used for rough work on pipes and similar soft metal where a perfect thread is not essential.

Lands and Clearance Holes. — Solid square dies are always provided with four lands excepting if very large, when five lands may be preferable. The width of the land should be about one-twelfth of the circumference of the screw to be cut with the die, or approximately one-fourth of the diameter of this screw. The clearance holes should be laid out so as to provide for this width of land. The center of the clearance holes should be located a trifle outside of the circle which measures the diameter of the screw to be cut. Some makers of dies locate the center of the clearance holes exactly on this circle, but the clearance holes then become rather small and are easily clogged with chips which may tear the threads of the screw being cut and occasionally break the teeth of the threads in the die.

In very large dies it is not possible to make circular clearance holes, as these would be required to be of too large a diameter in order to make the lands of the correct width. In such cases two clearance holes are drilled between each two of the lands and connected with a straight surface as shown in Fig. 140.

The chamfer on the top of the thread should extend for about three to four threads. It is necessary to relieve the dies on the top of the thread of the chamfered teeth in order to make the die cut. If the die should be expected to cut a thread close up to a shoulder, the chamfer, of course, would have to be made proportionally shorter, the same as in the case of spring screw dies already mentioned.

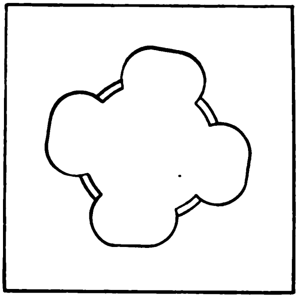

Fig. 140. Large Size Square Solid Die, showing Form of Clearance Holes

As the clearance holes when drilled do not produce a desirable cutting edge on the face of the teeth, the front face must be filed after the holes are drilled. They are as a rule filed radial as shown in Fig. 141. When the dies are used wholly for threading brass castings and various other alloys of copper, it is common in many shops

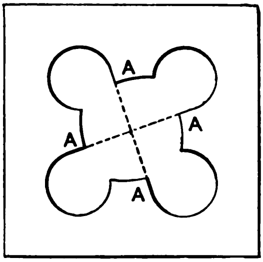

Fig. 141. Cutting Edges as Ordinarily made

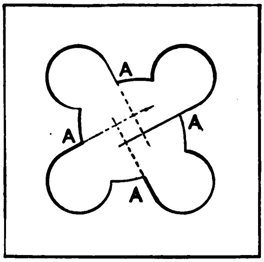

Fig. 142. Cutting Edges with Negative Rake

to give the face of the cutting edges a negative rake as shown in Fig. 142. However, opinions differ widely as to the proper rake to give to the lands of threading dies, and it is probably as well to make the faces radial in all cases. As a matter of fact the dies will cut all metals ordinarily used in a machine shop to full satisfaction if made in this manner.

Dimensions of Solid Square Dies. — In regard to the sizes in which solid square dies should be made, the outside dimensions evidently depend upon the size of the holders in which the dies are used. The thickness of the die should preferably be made not less than one and one-quarter times the diameter of the screw to be cut with the die, but manufacturers of dies do not as a rule make their dies quite so thick. The general rule is to make the thickness about equal to the diameter, at least for sizes of screws larger than three-quarters inch diameter. In Tables LXXX and LXXXI are given the general dimensions of dies as commonly manufactured, both for regular sizes and pipe sizes. These dimensions are, of course, given only as a guidance, there being no particular reason for making the dies in these sizes excepting that the outside dimensions being standardized, the number of holders necessary to use with the dies is reduced to a minimum.

TABLE LXXX.

DIMENSIONS OF SQUARE SOLID BOLT DIES.

Diameter of Thread.	Size of Square.	Thickness.	Diameter of Thread.	Size of Square.	Thickness.
1/4	2 1/2	1/2	7/8	2 1/2	3/4
5/16	2 1/2	1/2	1	2 1/2	1
3/8	2 1/2	1/2	1 1/8	2 1/2	1
7/16	2 1/2	1/2	1 1/4	2 1/2	1
1/2	2 1/2	3/4	1 3/8	2 1/2	1
9/16	2 1/2	3/4	1 1/2	3	1
5/8	2 1/2	3/4	1 5/8	3	1
11/16	2 1/2	3/4	1 3/4	3	1 1/4
3/4	2 1/2	3/4	1 7/8	3 1/2	1 1/2
13/16	2 1/2	3/4	2	3 3/4	2

TABLE LXXXI.

DIMENSIONS OF SOLID SQUARE PIPE DIES.

Nominal Pipe Size.	Size of Square.	Thickness.	Nominal Pipe Size.	Size of Square.	Thickness.
$\frac{1}{8}$	2	$\frac{1}{2}$	1	3	$\frac{3}{4}$
$\frac{1}{4}$	2	$\frac{1}{2}$	$1\frac{1}{4}$	3	$\frac{3}{4}$
$\frac{3}{8}$	2	$\frac{1}{2}$	$1\frac{1}{4}$	4	1
$\frac{3}{8}$	$2\frac{1}{2}$	$\frac{3}{4}$	$1\frac{1}{2}$	4	1
$\frac{1}{2}$	$2\frac{1}{2}$	$\frac{3}{4}$	2	4	1
$\frac{3}{4}$	$2\frac{1}{2}$	$\frac{3}{4}$	$2\frac{1}{2}$	5	$1\frac{1}{4}$
$\frac{3}{4}$	3	$\frac{3}{4}$	3	5	$1\frac{1}{4}$

It is, however, necessary to call attention to the fact that on account of the clearance holes the size of the outside square must have some minimum relation to the diameter of the thread to be cut, so that the metal where the clearance holes are drilled will not become too thin. Even if strong enough to stand the strain incident to the thread-cutting operation, a die with too thin metal at the clearance holes will spring badly out of shape in hardening and will become a very poor tool for its purpose. The outside size of the square ought not to be less than double the diameter of the thread to be cut.

Number of Lands. — While four cutting edges or lands are sufficient, at least for all dies up to four inches diameter which cut a full thread, it is necessary to provide more than four cutting edges in a die used for threading work in which part of the circumference is cut away. A greater number of cutting edges is here needed in order to steady and guide the die and prevent the work from crowding into the side where the metal is cut away. When more than one-sixth of the circumference is cut away, it is not advisable to try to use dies for cutting the thread. The number of cutting edges is proportional to the amount of the circumference of the work cut away and should be as follows:

Fraction of Circumference Cut Away.	Number of Cutting Edges.
$\frac{1}{24}$	5
$\frac{1}{12}$	6
$\frac{1}{8}$	7
$\frac{1}{6}$	8

SPLIT ADJUSTABLE DIES.

Split adjustable dies, as said before, are usually round, as shown in Fig. 143. The split permits the die to be opened or closed up for adjustment. The countersink *A* at the split is for the point of the adjusting screw. The countersinks *B* are for the binding screws, which close up the die to bear upon the point of the adjusting screw. Instead of countersinking at *A* and *B* as shown in Fig. 143 it is cheaper when making these dies in quantities to mill grooves as shown in Fig. 144. The groove as well as the

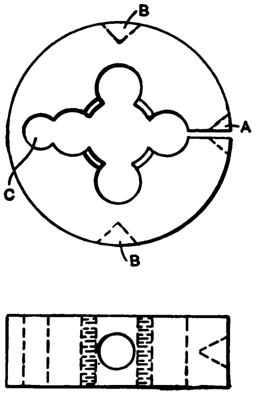

Fig. 143. Round Split Adjustable Die

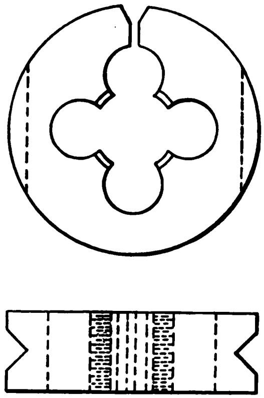

Fig. 144. Die with Grooves for Adjusting Screws

countersink for the adjusting screw is usually made 60 degrees inclusive angle, and those for the binding screws 90 degrees.

In order to make the dies more easily adjustable a small hole is often drilled outside of the clearance hole opposite the split, as shown at *C* in Fig. 143. If the dies made are few they may be split before hardening, as shown in Fig. 145, with a saw or narrow file, but should not be split all the way through until after hardening in order to prevent springing due to this process. When made in large quantities, a hole may be drilled outside of the clearance hole where the split is to come and the groove for the adjusting screw milled so as to leave a narrow bridge of metal between the hole and the bottom of the groove as shown in Fig. 146. This bridge of metal is then removed after hardening by means of grinding with a thin emery wheel or a bevel wheel with an acute angle.

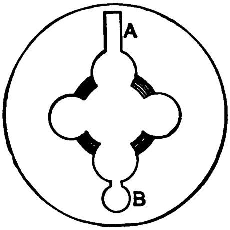

Fig. 145. Manner of Splitting Round Adjustable Die before Hardening

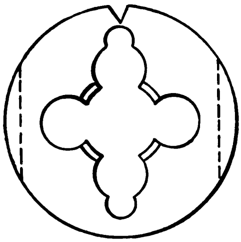

Fig. 146. Another Method of Splitting Round Adjustable Dies before Hardening

Round split dies for sizes up to and including three-sixteenths inch are given only three lands. All other sizes are provided with four lands. When hardening these dies, draw to a blue back of the clearance holes, in order to insure a good spring temper.

About three threads should be chamfered and relieved on the top of the chamfer on the leading side of the die. Such dies as are intended for use in die stocks should be chamfered on both sides or ends, in order to permit the turning of the die and its cutting close up to a shoulder. In such cases the chamfer on the leading side should be about three threads as before and on the back side from one to one and one-half threads. The thread which is to be cut close to a shoulder should, however, always be started with the leading side of the die, both because this side is provided with a longer chamfer and consequently possesses better cutting qualities, and also because of the guide with which the die stock is provided on the leading side which is necessary to insure a straight thread.

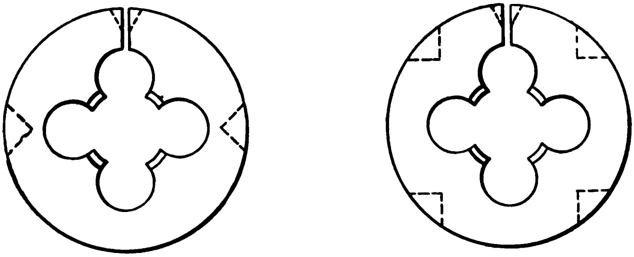

Fig. 147. Comparison between Common Ways used for Locating Adjusting Screws

There is some difference of opinion as to the best manner of arranging the binding screws for adjustable split dies. The common arrangement, with two screws, has been referred to; but an arrangement for four screws, as shown in Fig. 147, evidently will close up the various lands more uniformly and the die will cut more freely. If adjusted so that the lands do not come at a uniform distance from the true axis of the die, all the lands will not cut; or, if they cut, will produce a thread that will be out of true.

Dimensions. — The outside dimensions of round split dies are usually made to certain standards to fit a few holders. Dimensions commonly used are stated in Table LXXXII.

TABLE LXXXII.

DIMENSIONS OF ROUND SPLIT ADJUSTABLE DIES.

Diameter of Thread.	Outside Diameter of Die.	Thickness.	Diameter of Thread.	Outside Diameter of Die.	Thickness.
1/16	13/16	1/4	1/2	2	5/8
1/8	13/16	1/4	9/16	2	5/8
3/16	13/16	1/4	5/8	2	5/8
1/4	13/16	1/4	11/16	2	5/8
3/16	1	3/8	3/4	2	5/8
1/4	1	3/8	11/16	2 1/2	11/16
5/16	1	3/8	3/4	2 1/2	11/16
3/8	1	3/8	13/16	2 1/2	11/16
7/16	1	3/8	7/8	2 1/2	11/16
3/8	1 1/2	1/2	1	2 1/2	11/16
7/16	1 1/2	1/2	1 1/8	2 1/2	11/16
1/2	1 1/2	1/2	1 1/4	2 1/2	11/16

If there is no necessity of adhering to certain outside diameters in order to fit holders, the dimensions for these dies published in the *American Machinist,* issue of June 29, 1905, answer the purpose very well. These dimensions are given in Table LXXXIII. There is no necessity, of course, to use as many die-holders as there are different outside diameters of dies. A couple of holders may be used, and intermediate sizes which do not fit the holders may be held by using a split bushing or collar in the holder. In Fig. 148 two circles *C* and *D* are shown. On these circles are located the centers of the clearance holes, the three holes having their centers on the inner circle, and the fourth hole, the one opposite the split, on the outer circle. This provides for the springing qualities of the die, and saves the drilling of an extra, small hole to give necessary adjusting possibilities. The last mentioned (fourth) hole is also larger in diameter than the others.

TABLE LXXXIII.

DIMENSIONS OF ROUND SPLIT DIES.

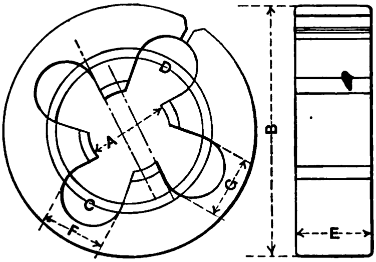

Fig. 148

Diameter of Screw.	Diameter of Die Blank.	Diameter of Large Center Circle.	Diameter of Small Center Circle.	Thickness. of Die.	Diameter of Large Clearance Hole.	Diameter of Small Clearance Hole.
A	*B*	*C*	*D*	*E*	*F*	*G*
1	$2\frac{5}{8}$	$1\frac{11}{16}$	$1\frac{1}{2}$	$\frac{3}{4}$	$\frac{11}{16}$	$\frac{5}{8}$
$\frac{15}{16}$	$2\frac{1}{2}$	$1\frac{19}{32}$	$1\frac{13}{32}$	$\frac{43}{64}$	$\frac{41}{64}$	$\frac{19}{32}$
$\frac{7}{8}$	$2\frac{5}{16}$	$1\frac{1}{2}$	$1\frac{5}{16}$	$\frac{21}{32}$	$\frac{19}{32}$	$\frac{35}{64}$
$\frac{13}{16}$	$2\frac{5}{32}$	$1\frac{3}{8}$	$1\frac{7}{32}$	$\frac{5}{8}$	$\frac{9}{16}$	$\frac{1}{2}$
$\frac{3}{4}$	2	$1\frac{1}{4}$	$1\frac{1}{8}$	$\frac{9}{16}$	$\frac{33}{64}$	$\frac{15}{32}$
$\frac{11}{16}$	$1\frac{13}{16}$	$1\frac{5}{32}$	$1\frac{1}{32}$	$\frac{33}{64}$	$\frac{15}{32}$	$\frac{7}{16}$
$\frac{5}{8}$	$1\frac{21}{32}$	$1\frac{1}{16}$	$\frac{15}{16}$	$\frac{15}{32}$	$\frac{7}{16}$	$\frac{25}{64}$
$\frac{9}{16}$	$1\frac{1}{2}$	$\frac{15}{16}$	$\frac{27}{32}$	$\frac{7}{16}$	$\frac{25}{64}$	$\frac{11}{32}$
$\frac{1}{2}$	$1\frac{5}{16}$	$\frac{27}{32}$	$\frac{3}{4}$	$\frac{3}{8}$	$\frac{11}{32}$	$\frac{5}{16}$
$\frac{7}{16}$	$1\frac{5}{32}$	$\frac{23}{32}$	$\frac{21}{32}$	$\frac{5}{16}$	$\frac{19}{64}$	$\frac{9}{32}$
$\frac{3}{8}$	1	$\frac{5}{8}$	$\frac{9}{16}$	$\frac{9}{32}$	$\frac{17}{64}$	$\frac{15}{64}$
$\frac{5}{16}$	$\frac{13}{16}$	$\frac{1}{2}$	$\frac{15}{32}$	$\frac{7}{32}$	$\frac{7}{32}$	$\frac{3}{16}$
$\frac{1}{4}$	$\frac{21}{32}$	$\frac{13}{32}$	$\frac{3}{8}$	$\frac{3}{16}$	$\frac{11}{64}$	$\frac{5}{32}$

Approximate formulas may be given to express the relation between the various dimensions. In these formulas,

A = diameter of the screw to be threaded,
B = diameter of the die blank,
C = diameter of outside circle locating clearance hole opposite split,
D = diameter of inside circle locating other three clearance holes,
E = thickness of the die,
F = diameter of clearance hole opposite split, and
G = diameter of the remaining three clearance holes.

The approximate formulas are:

$$B = 2.62\,A,$$
$$C = 1.68\,A,$$
$$D = 1.5\,A,$$
$$E = 0.75\,A,$$
$$F = 0.69\,A,$$
$$G = 0.62\,A.$$

Die Holders.

An ordinary lathe die holder is shown in Fig. 149, and dimensions for holders of this design for the dies in Table LXXXII are given in Table LXXXIV. A holder for a smaller size is also specified, as dies for small machine screw sizes are often made with an outside diameter of five-eighths inch and a thickness of one-quarter inch. The dimensions cannot always be adhered to perhaps, but they will be of value as guidance when proportioning holders of this or similar kinds.

It will be noticed that the center line of the binding screws does not fully coincide with the center of the die in the longitudinal direction, but that the screws apparently are located 0.010 inch too far in. This is for the purpose of forcing the dies solidly toward the bottom of the recess, the screws exerting a wedge action on the dies in the countersinks or milled grooves provided for the point of the screws.

Approximate formulas may be found from which well-proportioned holders for other sizes than those given in the table may be made. In the formulas,

d = outside diameter of die,
A = diameter of recess,
B = depth of recess = thickness of die,
C = outside diameter of holder,
D = diameter of hole in shank,
E = diameter of shank,
F = length of body,
G = length of shank,
H = total length,
I = size of adjusting and binding screws, and
K = distance from end of holders to center of screws.

The following formulas give results approximately as stated in Table LXXXIV.

$$A = d + (0.004\,d + 0.005),$$

$$C = \frac{11\,d + 1}{8}, \qquad G = 3\,B,$$

$$D = \frac{9\,d}{16}, \qquad H = \frac{9\,B}{2},$$

$$E = \frac{3\,d + 1}{4}, \qquad I = \frac{d}{8} + \frac{3}{32},$$

$$F = \frac{3\,B}{2}, \qquad K = \frac{B}{2} + 0.010.$$

TABLE LXXXIV.

DIMENSIONS OF DIE HOLDERS FOR USE IN ORDINARY LATHE.

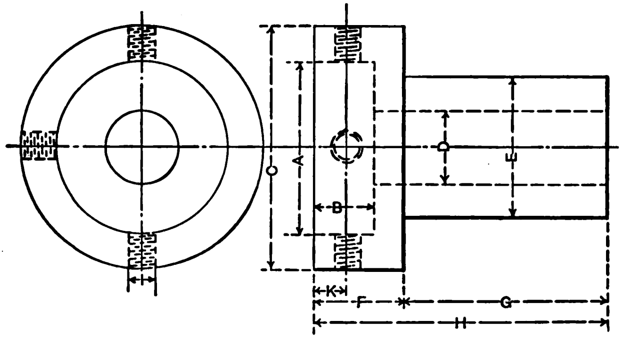

Fig. 149

Diameter of Recess.	Depth of Recess.	Outside Diameter.	Diameter of Hole in Shank.	Diameter of Shank.	Length of Body.	Length of Shank.	Total Length.	Size of Screws.	Location of Screws.
A	*B*	*C*	*D*	*E*	*F*	*G*	*H*	*I*	*K*
0.632	$\frac{1}{4}$	1	$\frac{3}{16}$	$\frac{1}{2}$	$\frac{3}{8}$	$\frac{3}{4}$	$1\frac{1}{8}$	$\frac{5}{32}$	0.135
0.821	$\frac{1}{4}$	$1\frac{1}{4}$	$\frac{7}{16}$	$\frac{7}{8}$	$\frac{3}{8}$	$\frac{3}{4}$	$1\frac{1}{8}$	$\frac{3}{16}$	0.135
1.009	$\frac{3}{8}$	$1\frac{1}{2}$	$\frac{9}{16}$	1	$\frac{9}{16}$	$1\frac{1}{8}$	$1\frac{11}{16}$	$\frac{7}{32}$	0.197
1.511	$\frac{1}{2}$	$2\frac{3}{16}$	$\frac{13}{16}$	$1\frac{3}{8}$	$\frac{3}{4}$	$1\frac{1}{2}$	$2\frac{1}{4}$	$\frac{1}{4}$	0.260
2.013	$\frac{5}{8}$	$2\frac{7}{8}$	$1\frac{1}{16}$	$1\frac{3}{4}$	$\frac{15}{16}$	$1\frac{7}{8}$	$2\frac{13}{16}$	$\frac{5}{16}$	0.322
2.515	$\frac{11}{16}$	$3\frac{9}{16}$	$1\frac{3}{8}$	$2\frac{1}{8}$	1	$2\frac{1}{16}$	$3\frac{1}{16}$	$\frac{3}{8}$	0.354

HOLDER FOR SPRING SCREW DIES.

In Fig. 150 is shown a holder for spring screw threading dies which gives to the spring screw die all the qualities of a solid die without losing any of the adjustable qualities of the spring die.

It will be seen from the cut that the die is held rigidly within a solid holder *A*, the shank of which fits the regular die holder or chuck. The screws *B* hold the die in place.

The screws *C* adjust the die in regard to the size independently of one another. These separate adjustments are convenient, for it is often necessary to adjust one jaw more than another. The screws *D* give a backing to the jaws and prevent them from springing away from the cut. A hardened bushing *E*, held in front of the die, guides the work when entering the die so that the thread will be concentric with the blank. The holes *F* permit the oil to enter the die and the chips to pass away from the cut.

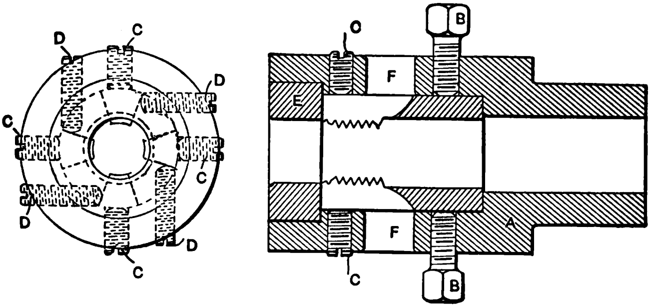

Fig. 150. Special Holder for Spring Screw Threading Dies

When adjusting the die use a master screw. Screw it into the die through the bushing and adjust the jaws until they barely touch the thread of the master screw. The die is then ready for use. The first screw made should be gauged, and readjustment should be made according to requirements. A little practice will enable the operator to adjust the die without any trouble. This holder will also be found to be convenient for holding the die when rehobbing it. Often one jaw needs more hobbing than another, and by means of the screws *C* this can be accomplished. The bushing *E* will be found to be an excellent guide for the hob.

INSERTED CHASER DIES.

Inserted chaser dies may be of two kinds — those which have the chasers driven solidly in place, and those having chasers easily removable. It is evident that the latter form is the superior, but it is also the more complicated and expensive form.

Inserted Chaser Dies with Fixed Chasers. — If we first consider the case of the dies with the blades solidly in place, we may safely say that it is not advisable to attempt to make small dies with inserted blades; but for dies larger than 1¾ or 2 inches in many shops a ring of machine steel or cast iron is made having slots in which are inserted blades made of tool steel. The first cost of a die may not be any less when made by this method, but the cost of new blades is much less than the cost of a new solid die. Then, again, unless large dies are pack-hardened there is considerable danger of cracking, which is, of course, largely done away with when only the blades are hardened.

The slots to receive the blades should be so made that the front edge of the blade will be radial, as was shown in Fig. 151. The slot must be wider at the bottom than at the top, as shown, in order that the blade may be drawn on to its seating and kept from drawing away from it when in use.

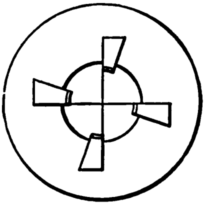

Fig. 151. Solid Inserted Blade Die

Inserted blade dies may be made either solid or adjustable. When made solid they are tapped with a hob the same size as the screw to be cut by the die; when made adjustable, they should be tapped with a hob a few thousandths of an inch larger than the size of the screw, to provide clearance to the land when cutting. For adjustable inserted blade dies the method of adjusting for size varies in different shops. Some mechanics consider it best to make them to adjust as shown in Fig. 152, while others claim best

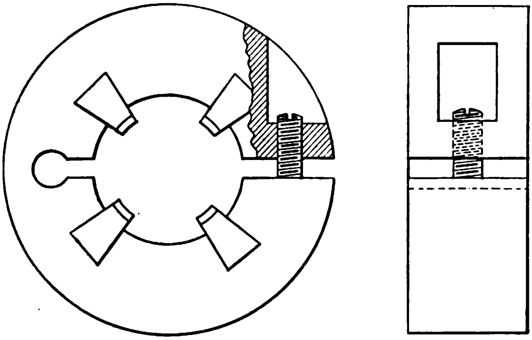

Fig. 152. Adjustable Inserted Blade Die

results if provided with adjustment as described under adjustable dies in a previous portion of this chapter.

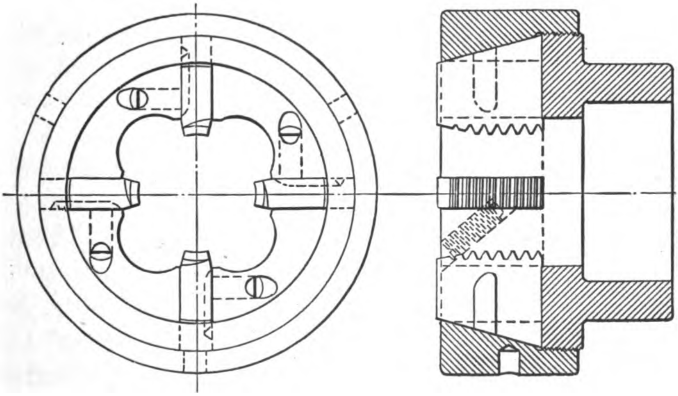

Fig. 153. Inserted Chaser Die with Adjustable Blades

Inserted Chaser Die with Removable Blades. — A typical construction of inserted chaser dies with easily removable blades is shown in Fig. 153. This die consists of four chasers or blades inserted in radial slots in a body or collet, the chasers as well as the collet being enclosed in a die ring. This ring is beveled on the inside to fit a corresponding bevel on the back of the chasers. It can be screwed up or down on the collet, thus pushing the chasers in or permitting them to recede from the center. Screws are provided bearing in slots of the chasers for holding the latter in place after having been adjusted by means of the ring.

The chasers must, of course, be made in sets so that each is, so to speak, one-quarter of a thread ahead of the following one, or in other words, the teeth on the chasers must all form one continuous thread around the die. The die shown in Fig. 153 is known as the Woodbridge adjustable die. The shank is in one solid piece with the body. Another form of inserted chaser die is shown in Fig. 154. Here the shank is screwed into the body and secured to it by means of a pin *G*. The screw *A* serves the purpose of locking the die ring *B* to the body as soon as the chasers are properly adjusted. The principle of securing the chasers is exactly the same as in the die previously described.

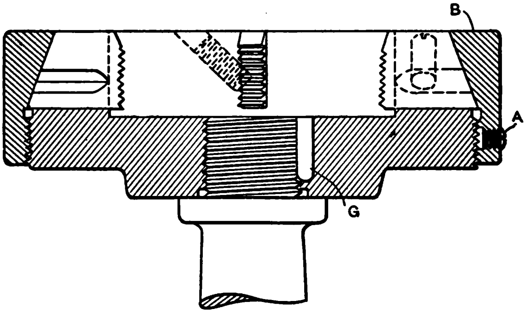

Fig. 154. Another Type of Inserted Chaser Die with Adjustable Blades

The object of inserted chaser dies is the adjustment possible and the saving caused by being able to use the same body and ring for an indefinite period, the chasers only being replaced when worn. Only the chasers are made from tool steel, the remaining parts being machine steel. As there is a considerable element of waste in being obliged to throw away a solid or adjustable die made from expensive steel whenever the cutting edges are worn away, it is obvious that the economy of replacing the cutting edges only is well worth consideration.

GRINDING THREADING DIES.

The grinding of the chamfer on the leading end of dies and die chasers is of great importance. The principle involved is the same in all classes of dies, but as an example we will refer to the spring screw dies shown in Figs. 155 and 156. The die may be to all appearances in perfect condition for doing good work and have an equal chamfer on every land, but the chamfer may not be of a kind that actually does much good. In nine cases out of ten, in manufactured dies, one will find that the chamfer is made on the lines indicated in Fig. 155, which is, to any one analyzing the subject, entirely wrong. This die has the appearance, when examined, of having a very liberal chamfer, but the actual fact is that this die has only about 1 to 1½ threads chamfered. Now, these 1½ threads will have all the cutting to do, and, consequently, will have a tendency to "dig in." The land that digs into the metal first will, of course, leave little or nothing for the other lands to cut. If a die is otherwise well made in all respects, and then has a chamfer like the one shown in Fig. 156, there will be no difficulty. The thread of the die should never be chamfered more than to the root of the thread. Whatever chamfer is made below this line is absolutely useless unless it be that the turret and spindle of the screw machine in which the die is used should be so much out of line that the die would have to act as a guide for the blank, in which case a chamfer like that shown in Fig. 155 would be quite useful. It might also be argued that a die held in a *loose* die holder must have a chamfer like that shown in Fig. 155, in order to start properly, but even in this case a chamfer as shown in Fig. 156 should be used, and the blank to be threaded should be chamfered before it is presented to the die.

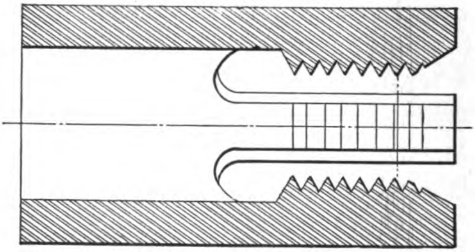

Fig. 155. Incorrect Way of Grinding Chamfer on Dies

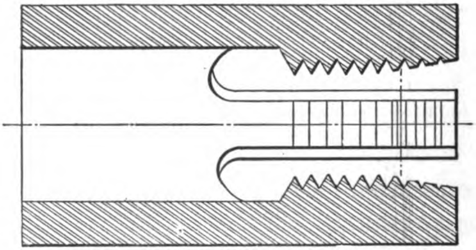

Fig. 156. Correct Way of Grinding Dies

SELF-OPENING DIES.

A treatise on dies would not be complete without mentioning self-opening dies. These are used particularly when cutting long threads. When the die has cut a screw the desired length, the cutting edges recede from the work, obviating the necessity of backing off the die. Thus for work on long screws valuable time is saved, and the tendency of the die to alter the shape of the thread when backing off is done away with.

There are many forms of self-opening dies, and to attempt a description of them all would be out of the question. One of the simpler ones was described by E. R. Markham in *Machinery*, June, 1904. This form, however, is not claimed to be the most satisfactory when in use, but some dies on the market which give excellent results are made for the trade in shops equipped with special tools which render it impossible with the ordinary machine-shop equipment to make a die at anywhere near the figure they can be purchased for. While the self-opening die shown in Fig. 157 is not claimed as the best, it works very well, and is commendable because it can be made in the ordinary shop.

The cutting edges are located on the ends of two movable jaws, or sliding pieces; these are placed in a slot cut in the head. They are moved toward the center by means of inclined cuts in the ring, as shown. To open the die turn the ring to allow the end of the sliding pieces to go into the deepest part of the inclined cut. A spring in each slide forces them against the cut in the ring. The ring *B* is made to fit on body *A*, which contains the slot to receive the movable jaws *C*, *C* which, in turn, are kept in place by means of the plate *D*.

The length of the threaded part of the screw is governed by the location of the dog *E*, which is movable on and fastened to plunger *F*. The dog projects through a slot into the hole in the shank, making it possible for the screw to strike it, thus forcing the plunger out of the hole in the adjustable ring *G*. This ring is adjustable on head ring *B* and is fastened to it by means of set screw *H*, which adjustment is necessary in order to alter the cutting size of the die. Plunger *F* is movable through collar *I*, which is securely fastened to the head by means of a pointed set screw, as shown. A coil spring forces the plunger into the hole in the adjustable collar *G*, when it is turned to a position that insures the die cutting the correct size.

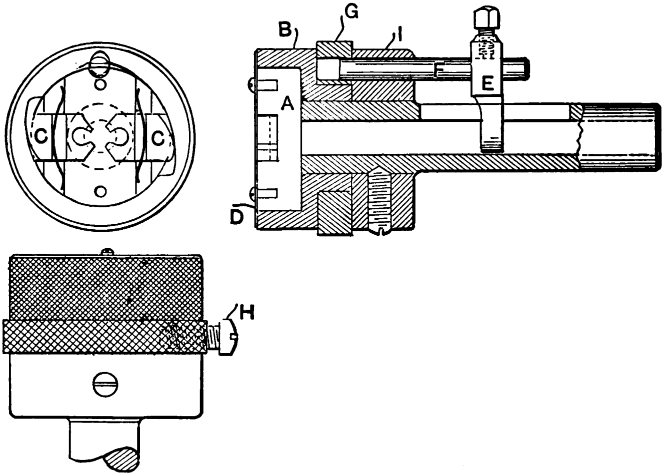

Fig. 157. Simple Design of Self-Opening Die

The movable pieces *C*, *C* are moved toward the center by means of the inclined surfaces on the inner side of ring *B*. When the plunger is forced out of the hole in collar *G*, the springs acting on the sliding pieces *C*, *C* force them against the inclined surfaces in the outer ring, causing it to turn, thus allowing the die to open.

CHAPTER VIII.

PLAIN AND SIDE MILLING CUTTERS.

INTRODUCTORY.

THE milling cutter, although a comparatively recently introduced tool, is probably one of the most universally used in the modern machine shop. There is no tool which has so completely revolutionized machine-shop practice, changed the methods formerly in vogue as well as influenced the design and development of machine tools, as has the milling cutter and its necessary companion, the milling machine. All this change has been brought about in a comparatively short time. For although the milling machine itself is not of so recent origin, it may be said without exaggeration that the milling machine has gained most of its prestige during the last fifteen years. The general adaptation of the process of milling to so many operations formerly done on as many machines, and the decreased need for individual skill, have been the greatest factors in its successful stride for recognition. Not only is the milling machine to-day doing a great deal of the work which years ago had to be done in the planer, shaper, slotting machine, and the gear planing machine, but during the last three or four years the newly developed thread milling machine has to a great extent superseded the old methods of cutting screw threads in the lathe. The milling cutter, the development of which necessarily had to follow the development of the machine, must therefore perform almost any function performed by any other machinist's tool, but evidently the variety of duties calls for a great variety in the design of cutters.

The forms of the teeth of milling cutters differ in many respects from the shape of the single-edged tool. The teeth are usually weaker than the tools, inasmuch as the back of the teeth must be milled away to provide clearance for chips. The teeth are, as a rule, not provided with top rake, or front rake, which is a more correct expression in the case of milling cutter teeth, but are usually milled radial. On all regular milling cutters, when the grooves between the teeth are milled, a small flat is left at the point of the teeth, which is termed "land;" this land is backed off sufficiently to provide for the cutting rake of the teeth.

After these general remarks we are ready to enter upon a detailed description of milling cutters. As said previously, the great variety of work done by milling cutters and the wide difference between the operations performed necessitate so great a variety in kinds, styles, and forms, that it would not be possible to treat them all under a general heading. For this reason we will follow the practice we adopted in the case of taps and dies, that of treating the most commonly used as completely as possible, analyzing the principles involved in connection with them, and giving but the necessary general information in regard to the less commonly used.

PLAIN MILLING CUTTERS.

Conditions Limiting the Size of Plain Milling Cutters. — By far the most commonly used of all cutters are plain milling cutters, Fig. 158. These are generally manufactured in sizes from two to five inches in diameter, and up to six inches in width or length. They may, of course, be made in sizes even larger than this, and the limit for the diameter given, five inches, for instance, is only arbitrary. Cutters up to ten and twelve inches in diameter are sometimes made solid. It must be remarked, however, that cutters of more than five inches diameter ought to be made of the inserted-tooth style, that is, with tool-steel blades inserted into a body made of machine steel or cast iron. If the cutter is made in this manner, it will even be cheaper to have high-speed steel blades inserted in a steel or cast-iron body than to make the cutter solid out of common ordinary tool steel. The inserted-blade milling cutter will, under all circumstances, be cheaper in the long run, because when the tool-steel cutters are worn out the body can be used for another set of cutters or blades, it being necessary to replace the latter only. In this connection it may be well to say that the opinions of milling-machine operators differ as to the superiority of high-speed steel for milling cutters; and when we referred to the use of this steel for blades for inserted-tooth milling cutters, it was done more as a reference to common practice than as an

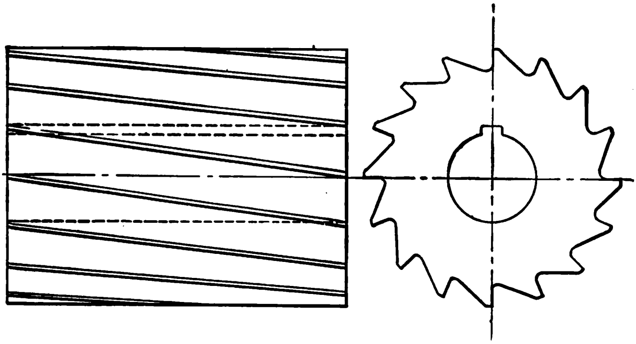

Fig. 158. Plain Milling Cutter

advice in the matter. We will return later to the opinions as to the use of high-speed steel for milling cutters.

In regard to the width of solid milling cutters, while here too such dimensions as six or eight inches face prevail more or less commonly, it is not good practice to make cutters of such a width. Four inches width of face may be considered as the maximum in good practice, and when greater length of cutter is required it should be made in two or more interlocking sections. The style of interlock used for plain milling cutters will be treated later. There are two very strong reasons why not only the maker or manufacturer of cutters but also the user should prefer wide-face cutters made in sections, at least when the commercial side of the question is considered. And the commercial side necessarily must be considered, as this is the cause which has led to our present highly developed machine-shop practice.

In the first place, the difficulty and the risk taken by the manufacturer in the various operations when making cutters of very large dimensions, and particularly the risk due to the liability of such large tools cracking in hardening, is a very pronounced reason why it is not profitable to undertake to make large cutters solid. When in use the risk taken with a solid cutter is greater than with one made in sections. If for any reason some part of the cutter should meet with an accident and become damaged, the whole cutter must be replaced. If the cutter is made in sections, only the portion which has been injured will need to be replaced. It is evident that the first cost of interlocked cutters will be somewhat higher than that of solid cutters, but it is fairly safe to say that, all considered, the cutter made in sections will in the end prove to be by far the cheaper one.

The Influence of the Diameter of Cutter on Time Required for Traversing the Work. — When speaking of the size of milling cutters some attention must be paid to the desirability of making the diameter of cutters as small as consistent with practical considerations. This is of advantage, in the first place, on account of the saving in material possible; secondly, because the power required for taking the cut when the cutter is in use becomes smaller on account of the smaller turning moment; and thirdly, because the distance the center of the cutter has to move for a given length of surface cut becomes smaller in proportion to the size of the milling cutter itself. As this distance evidently is proportional to the time used for traversing the work, it is clear that a smaller diameter cutter involves a saving in time needed to perform a certain milling operation and consequently in the expense. Small-diameter cutters are therefore a great saving in many respects, provided, of course, that the cutters are large enough to have sufficient strength, and can be provided with teeth heavy enough for the operation for which they are intended.

The influence of the diameter of the cutter on the time required to traverse a piece of work can be most easily understood by referring to Fig. 159. If *A* is the piece to be milled, *B* a milling cutter of a diameter twice as large as the diameter of the cutter *C*, and *DE* the surface to be milled, it is plainly seen that the center of large cutters must travel from *F* to *G* in order to traverse the piece of work, while the small cutter must travel only from *H* to *K*, a considerably shorter distance. It will be seen that the actual saving in length of travel, *FG* – *HK*, is constant, whatever be the length of the work, other conditions being equal. From this we can draw the conclusion that the relative saving, that is, the percentage of time saved, is greater in the case of short cuts than in the case of long ones, and, in fact, for very long surface cuts it probably will be so small as to be disregarded altogether. However, for short cuts, the Brown and Sharpe Company states that a difference of only half an inch in diameter has been found to make a saving of 10 per cent in the cost of the work in their own shops.

Conditions Governing the Minimum Size of Cutters. — While thus a small cutter is desirable, we must carefully note the conditions governing the minimum size practicable. In the first place, the hole through the cutter must be large enough to permit the use of an arbor strong enough to transmit the necessary power for driving the cutter without undue vibrations. The metal between the hole and the bottom of the grooves between the teeth must be strong enough not only between the hole and the groove as measured at *A*, Fig. 160, but between the key-way and the bottom of the groove as measured at *b*. This is the place where cutters constructed too weak usually fail. It may be said that

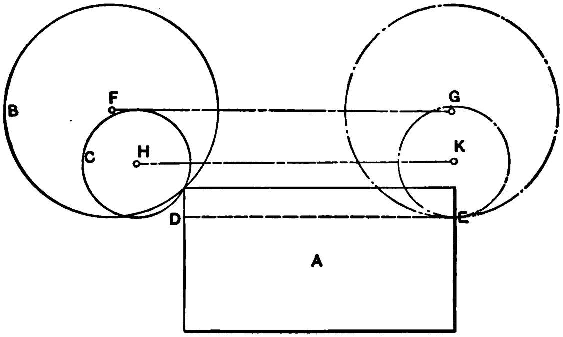

Fig. 159. Influence of Diameter of Cutter on Time Required for Traversing the Work

less than three-eighths inch metal is not advisable to use. Finally, the diameter must be large enough to permit a groove of correct shape to be cut and permit proper space between the teeth. It is obvious that if the teeth are spaced close together the groove will be proportionally less in depth, and the diameter of the cutter can consequently be made smaller; however, the spacing of the teeth should not be influenced by the endeavor to diminish the diameter of the cutter, as this would spoil the efficiency of the cutter in other respects.

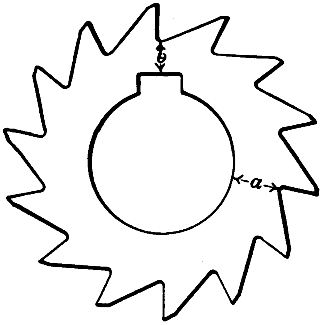

Fig. 160. The Weakest Parts of a Milling Cutter

It may also be proper to say that a narrow-face cutter as a rule can be of less heavy construction, diametrically, than a wide-face one, because, as a rule, the stresses in the cutter become proportionally greater as the width of the face increases.

NUMBER OF TEETH.

As to the number of teeth in plain milling cutters there is considerable difference of opinion. The practice of the Pratt and Whitney Company, which has been one of the pioneers in cutter manufacturing, corresponds very nearly to the formula

$$N = \frac{5D + 24}{2},$$

in which formula

N = the number of teeth and

D = the diameter of cutter.

The numbers of teeth figured from this formula are given in Table LXXXV. Of course, plain milling cutters are always given an even number of teeth, and the values figured from the formula will only be approximate.

TABLE LXXXV.

NUMBER OF TEETH IN PLAIN MILLING CUTTERS.

$$\text{No. of teeth} = \frac{5 \times \text{diam.} + 24}{2}.$$

Diameter of Cutter.	Number of Teeth.	Diameter of Cutter.	Number of Teeth.
2	16	5½	26
2¼	18	6	26
2½	18	6½	28
2¾	18	7	30
3	20	7½	30
3½	20	8	32
4	22	9	34
4½	24	10	36
5	24	....	....

It will be noticed by examining the number of teeth given in the table and comparing them with the diameters that the spacing of the teeth becomes very much coarser as the diameters increase. Thus, the pitch of the cutter, or the distance on the circumference from cutting edge to cutting edge, is about three-eighths inch for a two-inch cutter, nine-sixteenths for a four-inch, and more than one inch for a ten-inch diameter cutter. This practice has been found to be satisfactory for all ordinary milling.

English Rule for Nnmber of Teeth. — When milling cutters first were made very little attention was paid to spacing the teeth of larger diameter cutters differently from those of small diameters. The teeth were also too fine, which resulted in the crowding of the chips as well as the breaking of the teeth. Even now it is claimed by some persons who deserve credit as authorities on the subject that a spacing of one-quarter to three-eighths inch distance from tooth to tooth is enough for any size milling cutter. However, it is open to question if this works well for anything but finishing cutters. Roughing cutters, and cutters for brass in particular, should have coarser pitch.

TABLE LXXXVI.

NUMBER OF TEETH IN PLAIN MILLING CUTTERS.

$$\text{Pitch of teeth} = \frac{\sqrt{\text{diam.} \times 8}}{16}.$$

Diameter of Cutter.	Number of Teeth.	Diameter of Cutter.	Number of Teeth.
2	26	5½	42
2¼	26	6	44
2½	28	6½	46
2¾	30	7	46
3	30	7½	48
3½	34	8	50
4	38	9	54
4½	38	10	56
5	40	....	....

A rule given by an English writer for cutters from four to fifteen inches in diameter is expressed in the formula

$$P = \frac{\sqrt{D \times 8}}{16},$$

where P = pitch of teeth and
D = diameter of cutter.

This rule gives a pitch of nearly three-eighths inch for a four-inch cutter, one-half inch for an eight-inch, and five-eighths inch for a twelve-inch diameter cutter. It will be seen that this pitch, although gradually increasing, gives far finer spacing, and consequently a larger number of teeth, than the rule expressed in our first formula for the number of teeth in cutters. The numbers of teeth according to the last formula are given in Table LXXXVI. These values should be used only for cutters used for finishing or for those taking very moderate roughing cuts.

German Rule for Number of Teeth. — While it may seem unnecessary to place on record any more formulas for obtaining the number of teeth in milling cutters, still in order to give a complete review of present practice the following formula, of German origin, may be of interest. According to this

$$P = \frac{D}{10} + C,$$

in which formula

P = pitch of teeth,
D = diameter of cutter, and
C = a constant the value of which varies for various diameters. Thus, for cutters up to 2 inches diameter .... $C = \frac{3}{16}$ inch

For cutters from

2 inches to 4 inches diameter .... $C = \frac{5}{32}$ inch
4 inches to $4\frac{3}{4}$ inches diameter .... $C = \frac{1}{8}$ inch
$4\frac{3}{4}$ inches to 6 inches diameter .... $C = \frac{1}{16}$ inch
6 inches to $7\frac{1}{4}$ inches diameter .... $C = \frac{1}{32}$ inch
$7\frac{1}{4}$ inches to 8 inches diameter .... $C = 0$ inch.

According to this formula, which admittedly is rather cumbersome to use, the pitch for a two-inch cutter would be approximately three-eighths inch, for a four-inch about nine-sixteenths, and for a ten-inch diameter cutter one inch; these values correspond very closely with those found from the formula based on the practice of the Pratt and Whitney Company.

In the last formula, as well as in the former one where the pitch was found and not the number of teeth, the latter value is, of course, found by dividing the circumference of the cutter by the pitch. Thus, if N equals the number of teeth in the cutter, P the pitch, and D the diameter of the cutter as before, we have

$$N = \frac{\pi D}{P} = \frac{3.14\ D}{P}.$$

Suppose we wish to obtain the number of teeth in a cutter 6 inches in diameter with the teeth spaced for finishing according to the formula $P = \frac{\sqrt{D \times 8}}{16}$ previously given. We first find the pitch,

$$\frac{\sqrt{6 \times 8}}{16} = \frac{\sqrt{48}}{16} = \frac{7}{16} \text{ (approximately).}$$

We now apply this value of the pitch to our formula for the number of teeth:

$$N = \frac{3.14 \times 6}{\frac{7}{16}} = \frac{301.4}{7} = 43 \text{ (approximately).}$$

The number of teeth selected would, of course, be an even number, that is 44.

It may be well once more to remark that this fine spacing, while it may be all right and even desirable for smooth finishing cuts, is not well suited for general practice. Besides, experiments have proven that less power is required to drive coarsely pitched cutters than those of fine pitch. The result of these experiments shows that for two four-inch cutters the one having 30 and the other only 15 teeth to the circumference, the ratio of the power required to drive the cutters, all conditions being equal, was 13.5 : 10.5, or in other words, the finely pitched cutter required nearly 30 per cent more power to perform a certain amount of work than did the coarsely pitched one. This certainly is evidence that ought to prove conclusively that fine pitches on milling cutters should be avoided.

TABLE LXXXVII.

LEAD OF SPIRAL FOR PLAIN MILLING CUTTERS.

Spiral = 9 × diameter + 4.

Diameter of Cutter.	Lead of Spiral in Inches.	Diameter of Cutter.	Lead of Spiral in Inches.
2	22	5½	53½
2¼	24¼	6	58
2½	26½	6½	62½
2¾	28¾	7	67
3	31	7½	71½
3½	35½	8	76
4	40	9	85
4½	44½	10	94
5	49	....	....

Spiral-cut Milling Cutters. — The teeth of plain milling cutters should preferably be cut spiral.* While all cutters ought to be cut spiral, whatever be the width of the face, it has become a practice among manufacturers of cutters to cut the teeth straight on narrow cutters, that is, cutters up to about three-quarters inch thickness. The amount of spiral is commonly expressed by stating the distance along the axis of the cutter corresponding to one complete turn of the spiral. If we denote this amount by S and the diameter of the cutter by D, we may write the formula

$$S = 9D + 4.$$

---

* "Helical" is, of course, the more correct expression, but as the word "spiral" is commonly used to express the helix of milling cutters, this word will be used.

Thus, if a cutter is six inches in diameter, the spiral should make one turn around the cutter in

$$9 \times 6 + 4 = 58 \text{ inches.}$$

The amount of spiral for various diameters figured from this formula is given in Table LXXXVII.

Nicked Milling Cutters. — In some cases it is preferred to have cutters with the teeth cut straight, no matter what width of face. One reason for this is that a spiral cutter necessarily produces a certain amount of end thrust, and when used in special machines not properly designed to take up a great deal of pressure in the longitudinal direction of the spindle it may be desirable to use a cutter with the teeth cut straight. Of course there would be no need for this in any modern, standard milling machine. When the teeth are cut straight, in order to break up the length of the cut, small grooves are cut at proper intervals in the lands of each tooth in such a manner that the grooves in one tooth come in the center of the cutting portion between the two grooves in the next tooth, as shown in the upper and lower cutting edges in Fig. 161. Cutters, the cutting edges of which are notched by this

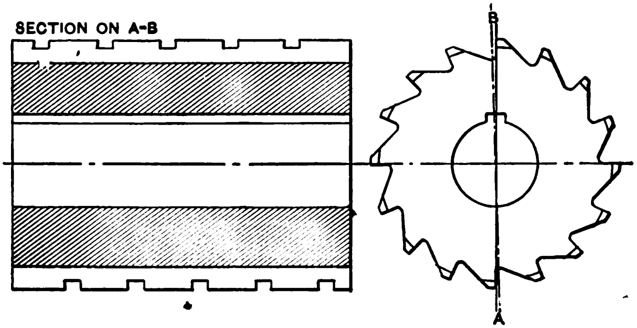

Fig. 161. Milling Cutters with Nicked Teeth

method, are generally termed "cutters with nicked cutting edges." Very often the cutting edges of spiral-teeth cutters are also nicked, particularly when the face is wide; but whether this actually improves the cutting qualities of the cutter may be open to question inasmuch as the cut is continually broken up anyway owing to the spiral of the cutting edge.

Fluting Cutters for Plain Milling Cutters. — Plain milling

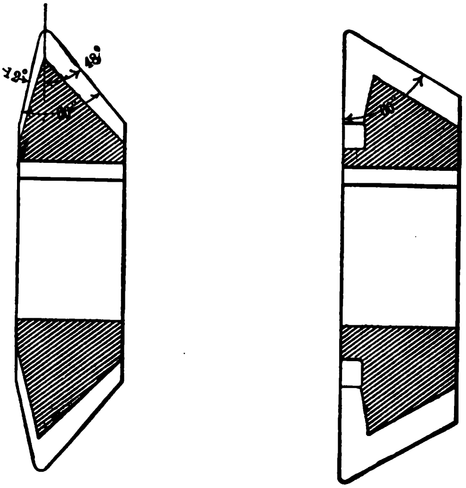

Fig. 162 Fig. 163

Fluting Cutters for Plain Milling Cutters

cutters, with the teeth cut spiral, should be fluted with a cutter having 60 degrees included angle, 12 degrees on one side and 48 degrees on the other, as shown in Fig. 162. Most manufacturers of small tools make for the market cutters for fluting spiral mills having an inclusive angle of 52 degrees only, 12 degrees on one side and 40 on the other. These cutters, however, produce too weak and unsupported a tooth and as a matter of fact the manufacturers themselves use a 60-degree cutter for cutting the teeth of the cutters of their own manufacture. When cutters are provided with straight teeth a grooving cutter as shown in Fig. 163 should be used. This is a regular 60-degree angular cutter.

The angular cutter for producing the teeth should have the corners of the teeth slightly rounded rather than sharp. The amount of round need be but slight, but it makes a stronger cutter when the grooves are cut a trifle rounding in the bottom and it also reduces the tendency to crack when the cutter is hardened, sharp corners being an invitation to crack.

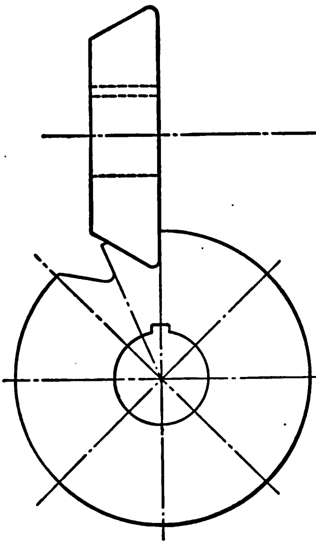

Fig. 164. Cutting Radial Teeth in Milling Cutter

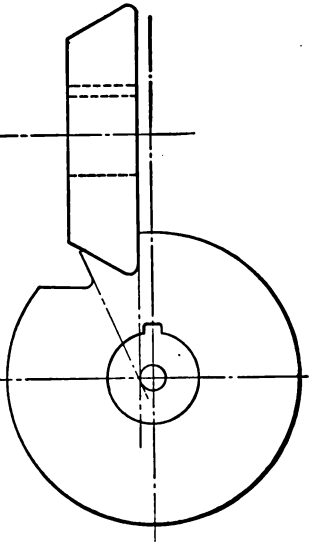

Fig. 165. Cutting Teeth with Negative Rake

Cutting the Teeth of Plain Milling Cutters. — While the teeth of all ordinary milling cutters are cut radial as shown in Fig. 164, some persons very familiar with the best shop practice claim that a certain amount of negative front rake, as shown in Fig. 165, is sometimes desirable, particularly when the cutter is to be used on brass. There are, however, differences of opinion in this respect, because on the other hand there are good reasons why milling cutters should be given a slight positive front rake in order to improve their cutting qualities. This has not been the practice so far, but it may become recognized, that here is an opportunity for improvement. Mr. A. L. De Leeuw in *Machinery* for May, 1906, calls attention to the fact that the use of a positive front rake in milling cutter teeth is not as common as it ought to be. He says that while it is true that not every cutter can be used with front rake, a great number that ought to have front rake are not provided with it. There are two main reasons why the rake for a milling cutter may not be advisable; one is that a cutter ground with rake is liable to produce a rather poor surface; the other is that the spaces between the teeth are liable to be filled up with chips. It is generally easy to avoid trouble on the latter score by providing means for washing the chips away. As far as the first reason is concerned, this is not quite so bad as it looks. In the first place, where one operation is done on a great number of parts it would be easy to have two cutters, one for roughing and one for finishing. This is something which, for some reason, is too much neglected in milling practice, perhaps for the reason that not so long ago most shops had only one or two milling machines, which were mainly used for tool work, or such operations as could not possibly be done on any other machine. As a consequence, there was a very great number of costly milling cutters for only one or two machines. It was quite natural, then, that this large number of cutters was not doubled again so as to get one cutter for roughing and one for finishing. As a rough surface was positively inadmissible, it followed that the cutter had to be made in such a way that a good surface was produced. That the cutter was not a decided success as a roughing cutter was only regretted (if it was noticed at all). Now that the milling machine is beginning to be recognized as a factor in the rapid production of work in manufacturing shops, it seems that the time is past when people can be satisfied with a slow cut, because the same cutter which takes a fast cut will not make a good surface.

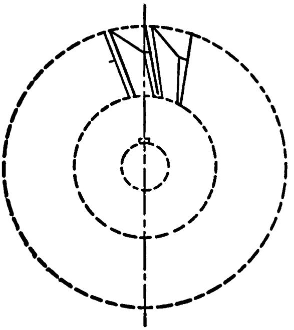

Fig. 166. Milling Cutter Teeth with Positive Front Rake

Fig. 166 shows a cutter milled with positive front rake. It must be understood that such cutters are not suited for finishing cuts, but only for roughing.

In milling the teeth it is necessary to leave a slight portion at the top of the tooth flat; this portion is termed "land," and is ground after hardening to the required angle to give keenness to the cutting edge. The width of the land varies for different pitches of teeth, and consequently for different diameters. The values for the dimension of the width of the land are given in Table LXXXVIII.

TABLE LXXXVIII.

WIDTH OF LAND OF PLAIN AND SIDE MILLING CUTTERS.

Diameter of Cutter.	Width of Land.	Diameter of Cutter.	Width of Land.
2	$\frac{1}{32}$	5	$\frac{3}{64}$
$2\frac{1}{2}$	$\frac{1}{32}$	6	$\frac{1}{16}$
3	$\frac{1}{32}$	7	$\frac{1}{16}$
$3\frac{1}{2}$	$\frac{3}{64}$	8	$\frac{5}{64}$
4	$\frac{3}{64}$	10	$\frac{5}{64}$

Allowance for Grinding. — The hole in the cutter should be left about 0.005 inch under size before hardening and ground to size when hardened. In order to facilitate this grinding it is advisable to recess the hole as shown in Fig. 167. The ends of the cutter must also be ground so as to offer true surfaces for the ground clamp collars to bear against. A considerable saving when grinding the ends is afforded by recessing as shown in Fig. 168, thereby producing a hub, which is the only portion of the end requiring to be ground. The diameter of the hub should not be less than the diameter of the hole in the cutter plus three-quarters inch. All corners should be carefully rounded when recessing, as any sharp corners are liable to produce cracks in hardening.

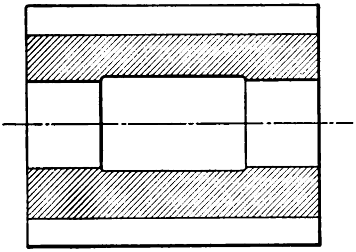

Fig. 167. Cutter with Hole Recessed to Facilitate Grinding

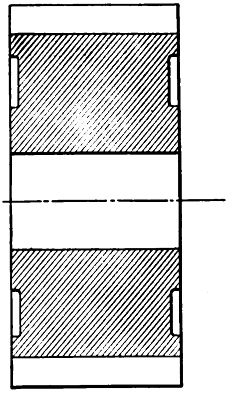

Fig. 168. Ends of Cutter Recessed to Save Grinding more than Actual Hubs

Key-ways.— In commenting upon the diameter to select for milling cutters, one of the conditions governing the size was the strength of the metal between the key-way and the bottom of the groove between the teeth. This key-way causes a great deal of confusion to users as well as to makers of cutters, as there is not as yet any universally adopted standard as to the size of the key-way. Manufacturers of cutters are trying to establish a standard for square as well as for half-round splines, which, if adopted by all users, would save a great deal of expense and difficulty and add to the interchangeability of the cutters. These standards are given in Tables LXXXIX and XC.

TABLE LXXXIX.

STANDARD KEY-WAYS FOR MILLING CUTTERS.—SQUARE.

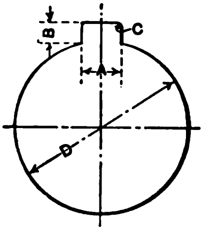

D = Diam. of Hole.	A = Width of Key-way.	B = Depth of Key-way.	C = Radius of Corners.
$\frac{3}{8}$ to $\frac{9}{16}$ inch.	$\frac{3}{32}$	$\frac{3}{64}$	0.002
$\frac{5}{8}$ to $\frac{7}{8}$ inch.	$\frac{1}{8}$	$\frac{1}{16}$	0.030
$\frac{15}{16}$ to $1\frac{1}{8}$ inch.	$\frac{5}{32}$	$\frac{5}{64}$	0.035
$1\frac{3}{16}$ to $1\frac{3}{8}$ inch.	$\frac{3}{16}$	$\frac{3}{32}$	0.040
$1\frac{7}{16}$ to $1\frac{3}{4}$ inch.	$\frac{1}{4}$	$\frac{1}{8}$	0.050
$1\frac{13}{16}$ to 2 inch.	$\frac{5}{16}$	$\frac{5}{32}$	0.060
$2\frac{1}{16}$ to $2\frac{1}{2}$ inch.	$\frac{3}{8}$	$\frac{3}{16}$	0.060
$2\frac{9}{16}$ to 3 inch.	$\frac{7}{16}$	$\frac{3}{16}$	0.060

HARDENING.

With regard to the hardening of milling cutters a great deal has been written, but there can be very little said that is definite enough to actually benefit any one who is trying to learn hardening theoretically. Experience and

TABLE XC.

STANDARD KEY-WAYS FOR MILLING CUTTERS. — HALF ROUND.

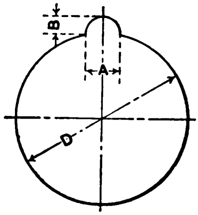

D = Diam. of Hole.	A = Width of Key-way.	B = Depth of Key-way.
$\frac{3}{8}$ to $\frac{5}{8}$ inch.	$\frac{1}{8}$	$\frac{1}{16}$
$\frac{11}{16}$ to $\frac{13}{16}$ inch.	$\frac{3}{16}$	$\frac{3}{32}$
$\frac{7}{8}$ to $1\frac{3}{16}$ inch.	$\frac{1}{4}$	$\frac{1}{8}$
$1\frac{1}{4}$ to $1\frac{7}{16}$ inch.	$\frac{5}{16}$	$\frac{5}{32}$
$1\frac{1}{2}$ to 2 inch.	$\frac{3}{8}$	$\frac{3}{16}$
$2\frac{1}{16}$ to $2\frac{7}{16}$ inch.	$\frac{7}{16}$	$\frac{7}{32}$
$2\frac{1}{2}$ to 3 inch.	$\frac{1}{2}$	$\frac{1}{4}$

acquaintance with the steels used are essential for successful hardening. Slow heating is, of course, necessary. For quenching bath some hardeners advocate the use of raw linseed oil, some brine, and some nothing but water. The bath should not be very cold. A brine bath of a temperature of about 70° F. will prove satisfactory if the hardener knows his business in other respects. Small cutters, say those below $2\frac{1}{2}$ inches in diameter, should be drawn to a temperature of 430° F. The temper of large milling cutters is usually not drawn.

It may be remarked that when quenching milling cutters, after having heated them, the general principles to be borne in mind are that long cutters should be plunged vertically and thin ones edgewise. This will in both cases tend to counteract distortion of the cutter.

GRINDING.

The grinding of the teeth of plain milling cutters is done in either of two ways. By the first and oldest method it is done by an emery wheel of the disk type, the wheel grinding the land of the tooth to the desired angle of clearance. The principal objection to this method is that the surface ground will become slightly concave, as shown by the dash-dotted line in Fig. 169. Another difficulty in this method, particularly, is also to be found in the care necessary to so adjust the grinding wheel that the proper degree of clearance will result. In this respect the toolmaker is entirely dependent upon his own judgment. It may, of course, be said that the angle of clearance should be from 5 to 7 degrees, that is, the land of the tooth should be in a plane making 5 to 7 degrees angle with the tangent

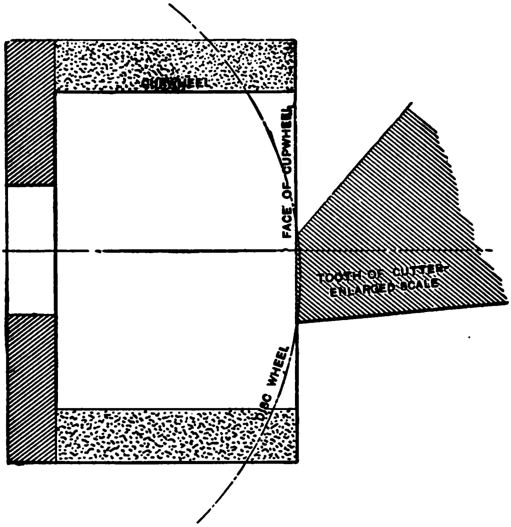

Fig. 169. Comparison between Action of Disk Wheel and Cup Wheel when Grinding Milling Cutter Teeth

to the outside diameter of the cutter at the edge of the tooth as shown in Fig. 170. In other words, if the teeth are cut radial, the included angle between the top of the tooth and the front face should be from 83 to 85 degrees. This, however, does not help the tool-maker much, as it is very hard to measure the angle referred to with any degree of accuracy. The common method of finding out whether enough clearance has been given to the tooth is to place a straight edge or a regular scale on top of the ground teeth as shown in Fig. 171. If the straight edge, when resting on adjacent cutting edges either coincides with the plane of the land of the tooth or shows a slight clearance between the straight edge and the top of the tooth as shown in Fig. 171, then the angle of clearance may be considered approximately correct.

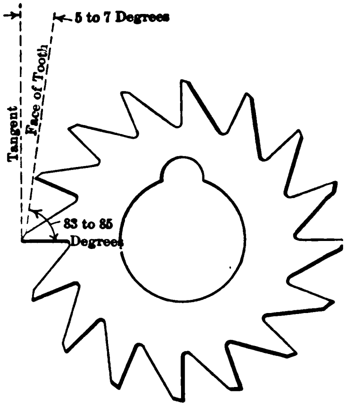

Fig. 170. Angle of Clearance of Cutter Teeth

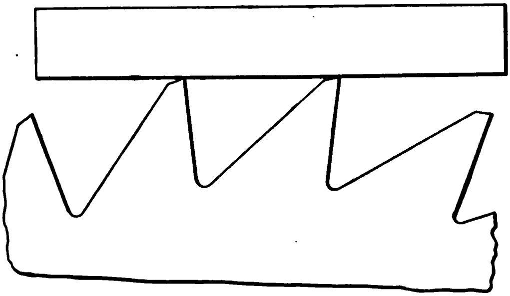

Fig. 171. Gauging the Clearance by Means of a Straight Edge

Grinding Clearance with Cup Wheel. — The second method of grinding the relief or clearance of plain milling cutters is by means of a cup wheel. This method was originated in Germany, and is at present gaining ground everywhere. The difference in the surface produced by this wheel and by the disk wheel is easily seen in Fig. 169. The cup wheel produces a longer lasting tooth, as the latter is not provided with so keen and unsupported a cutting edge. This method of grinding is to be recommended in all cases where it is possible to use it. By this method it is also possible to gauge the angle of clearance in a more satisfactory manner. The grinding head may be made so that the cup wheel spindle inclines say 6 degrees to the horizontal. This of course gives the face of the cup wheel an inclination of 6 degrees to a vertical plane. If now the cutter is presented to the wheel so that the front face of the tooth to be ground is in the horizontal plane going through the center of the cutter, as shown in Fig. 172, then the clearance angle of the tooth will evidently be 6 degrees. The advantages of the method referred to are a flat top surface and a uniform clearance angle on all the teeth.

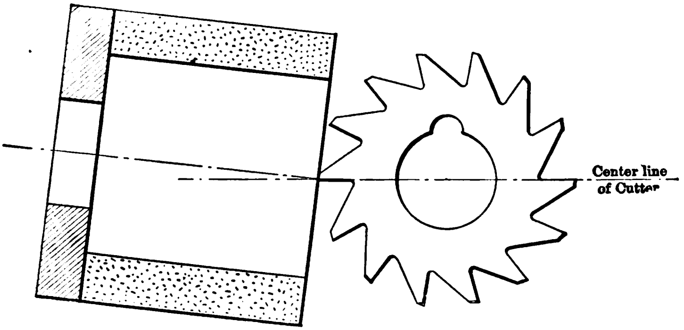

Fig. 172. Cup Wheel Inclined to the Angle of Clearance of Cutter

In order to diminish the disadvantage of the concave form of the land of the tooth when the grinding is performed with a disk wheel, it is necessary to select a wheel of as large a diameter as possible, as then evidently the concavity will become less pronounced.

Precautions in Grinding. — When grinding it is also necessary to get the length of all the teeth as nearly equal as possible, so that one tooth does not project further from the common center than do the others. If one or a few teeth project beyond the others, they will cut deeper into the metal to be cut, and a surface of an uneven and wavy appearance will result. In order to get the teeth ground to an equal length they should all be ground with a stop resting against the face of the tooth operated upon. It is evident that in such a case they must all be identically the same when ground. If the cutter were indexed around by an index head when grinding, in the same way as when the teeth are cut, an uneven length of teeth would result, because no index head is so perfect as to bring every tooth to the very same position in relation to the grinding wheel as was occupied by the former tooth. Every indexing head will cause slight irregularity in the spacing of the teeth. If, however, the teeth are all one after another brought up against the same stop, which is held in a fixed relation to the grinding wheel, every tooth will be ground correctly, irrespective of slight irregularities in the spacing of the teeth.

When a special grinding head with the spindle inclined as mentioned previously cannot be had, the clearance angle can be secured by using a cup wheel with a vertical face and setting the stop pin or guide for the tooth somewhat below the center of the cutter to be ground, as shown in Fig. 173. Evidently this will fill the purpose equally well.

Setting the Tooth Guide.— The amounts to set the guide below the cutter center are given in Table XCI for 5- and 7-degree angles. This table is as given by the Cincinnati Milling Machine Company. When grinding with a disk wheel the center of the wheel must be set a certain distance above the center of the cutter, the guide pin in this case being set at the same height as the cutter center. The amounts to set the wheel center above the cutter center for various cutter diameters are given in Table XCII. It is evident that if too large a wheel is selected it may cut into the tooth nearest to the one ground. In such a case a smaller wheel must be used.

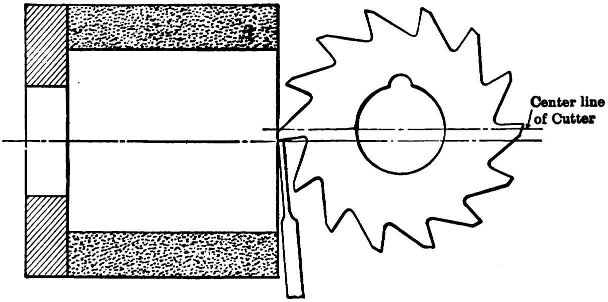

Fig. 173. Setting Stop Pin for Grinding Clearance on Milling Cutter Teeth

In regard to the clearance angle it may be added that where special roughing and finishing cutters are made 5 degrees should be used for the latter and 7 degrees for the former cutters.

SIDE OR STRADDLE MILLING CUTTERS.

The next class of cutters to be considered are side or straddle milling cutters, Fig. 174, the latter name having originated through the use of these cutters in pairs or gangs.

TABLE XCI.

TABLE FOR SETTING TOOTH REST BELOW CUTTER CENTER TO OBTAIN 5 AND 7 DEGREES CLEARANCE WHEN GRINDING MILLING CUTTER TEETH WITH CUP WHEEL.

Diameter of Cutter.	5 Deg. Clearance.	7 Deg. Clearance.	Diameter of Cutter.	5 Deg. Clearance.	7 Deg. Clearance.
$\frac{1}{4}$	0.011	0.015	3	0.132	0.180
$\frac{3}{8}$	0.015	0.022	$3\frac{1}{4}$	0.143	0.195
$\frac{1}{2}$	0.022	0.030	$3\frac{1}{2}$	0.154	0.210
$\frac{5}{8}$	0.028	0.037	$3\frac{3}{4}$	0.165	0.225
$\frac{3}{4}$	0.033	0.045	4	0.176	0.240
$\frac{7}{8}$	0.037	0.052	$4\frac{1}{2}$	0.198	0.270
1	0.044	0.060	5	0.220	0.300
$1\frac{1}{8}$	0.050	0.067	$5\frac{1}{2}$	0.242	0.330
$1\frac{1}{4}$	0.055	0.075	6	0.264	0.360
$1\frac{1}{2}$	0.066	0.090	$6\frac{1}{2}$	0.286	0.390
$1\frac{3}{4}$	0.077	0.105	7	0.308	0.420
2	0.088	0.120	$7\frac{1}{2}$	0.330	0.450
$2\frac{1}{4}$	0.099	0.135	8	0.352	0.480
$2\frac{1}{2}$	0.110	0.150	9	0.396	0.540
$2\frac{3}{4}$	0.121	0.165	10	0.440	0.600

TABLE XCII.

TABLE GIVING DISTANCE TO SET CENTER OF GRINDING WHEEL ABOVE THE CUTTER CENTER WHEN USING DISK WHEEL.

Diameter of Emery Wheel.	5 Deg. Clearance.	7 Deg. Clearance.	Diameter of Emery Wheel.	5 Deg. Clearance.	7 Deg. Clearance.
2	$\frac{3}{32}$	$\frac{1}{8}$	$4\frac{1}{4}$	$\frac{3}{16}$	$\frac{17}{64}$
$2\frac{1}{4}$	$\frac{3}{32}$	$\frac{9}{64}$	$4\frac{1}{2}$	$\frac{13}{64}$	$\frac{9}{32}$
$2\frac{1}{2}$	$\frac{7}{64}$	$\frac{5}{32}$	$4\frac{3}{4}$	$\frac{13}{64}$	$\frac{19}{64}$
$2\frac{3}{4}$	$\frac{1}{8}$	$\frac{11}{64}$	5	$\frac{7}{32}$	$\frac{5}{16}$
3	$\frac{1}{8}$	$\frac{3}{16}$	$5\frac{1}{4}$	$\frac{15}{64}$	$\frac{21}{64}$
$3\frac{1}{4}$	$\frac{9}{64}$	$\frac{13}{64}$	$5\frac{1}{2}$	$\frac{15}{64}$	$\frac{11}{32}$
$3\frac{1}{2}$	$\frac{5}{32}$	$\frac{7}{32}$	$5\frac{3}{4}$	$\frac{1}{4}$	$\frac{23}{64}$
$3\frac{3}{4}$	$\frac{5}{32}$	$\frac{15}{64}$	6	$\frac{17}{64}$	$\frac{3}{8}$
4	$\frac{11}{64}$	$\frac{1}{4}$	....	....	....

These cutters can be considered as a combination of a plain milling cutter and an end mill, and consequently, as far as the face is concerned, whatever has been said about plain milling cutters applies also to side milling cutters. As these cutters are very seldom made of any considerable width of face, they are almost always cut straight.

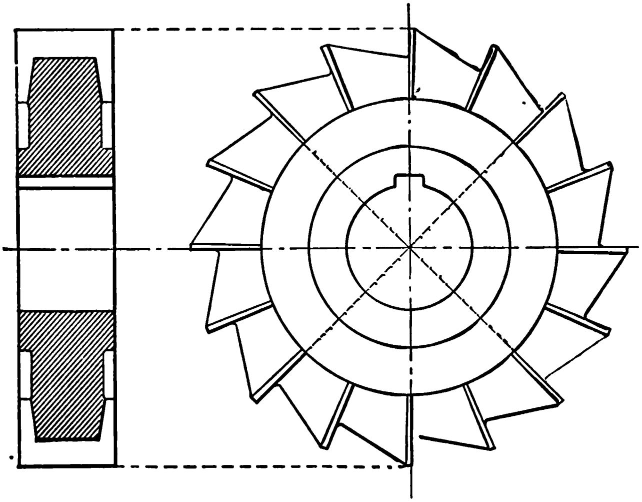

Fig. 174. Side Milling Cutter

Milling the Teeth on the Sides. — When milling the teeth on the sides of a side milling cutter, the cutter to use and the angle to which to set over the mill when being cut must be selected with a great degree of judgment and care. It would be almost impossible to give any definite rules or figures, but for general guidance it may be said that a cutter of the same form as for milling the teeth on the face should be used except that the angle of the cutter should be about 75 degrees instead of 60 degrees. The formula for finding the angle to which to set over the cutter while the teeth are being cut on the side can, however, easily be derived. If N be the number of teeth in the cutter to be cut, v the angle of the cutter with which the teeth are cut, and w the angle to which to set over the index head of the milling machine on which the mill to be cut is mounted, then

$$\cos w = \tan \frac{360^\circ}{N} \times \cot v.$$

This formula is proved as follows:

Let it be assumed that the number of teeth in the mill to be cut and the angle of the angular cutter with which the teeth are to be milled are given. The angle sought is the one to which to set the index head of the milling machine. In Fig. 175 the problem is shown diagrammatically, the cutter angle ADB and the number of teeth, N, being given, while the angle to which the index head is to be set (which is to be determined) is BEC. In order to simplify the calculations, assume the radius of the side mill to equal 1. Evidently the length of the radius has no influence on the final result, or on our formula, anyway. The angle BCM represents the angle of one tooth of the side mill. Now produce CM to A and draw AB. The line CE represents the bottom of the tooth, and the plane in which the angle of the cutter for milling the teeth must be measured is at right angles to CE, or in the plane BD (lower view of Fig. 175).

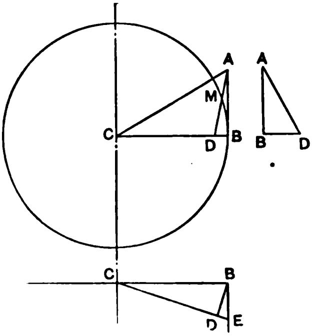

Fig. 175. Deriving Formula for the Setting of Side Milling Cutter when Milling Teeth on Side

We can now arrive at the following equation:

$$\text{Angle } ACB = \frac{360°}{N}.$$

$$\tan\frac{360°}{N} = \tan ACB = \frac{AB}{BC}.$$

But BC = radius of side mill = 1, and consequently

$$\tan\frac{360°}{N} = AB. \tag{1}$$

The triangle ABD, shown at the right in Fig. 175, is in a plane perpendicular to the bottom CE of the tooth, the angle ADB being the cutter angle, as mentioned. Then

$$BD = AB \times \cot ADB = \tan\frac{360°}{N} \times \cot ADB. \tag{2}$$

The line BD, however, also lies in the plane containing the right triangle CDB. We have, therefore,

$$\cos CBD = \frac{BD}{BC}. \tag{3}$$

But BC = radius of side mill = 1, and consequently, from (2) and (3),

$$\cos CBD = BD = \tan\frac{360°}{N} \times \cot ADB. \tag{4}$$

The angle CBD equals the angle BEC, or the angle to which to set the index head; therefore

$\cos BEC = \tan\frac{360°}{N} \times \cot ADB$, or, expressed in words:

The cosine of the angle to which to set the index head equals the tangent of the tooth angle multiplied by the cotangent of the angle of the cutter by which the teeth are cut.

This proof was contributed by Irving Banwell in *Machinery*, February, 1908.

Assume as an example that we wish to cut the teeth on the side of a side milling cutter having 18 teeth with an angular cutter of 75 degrees. Then the cosine for the angle to which to set the index head in which the milling cutter is held, or

$$\cos w = \tan 20^\circ \times \cot 75^\circ = 0.364 \times 0.268 = 0.0975.$$

$$w = 84^\circ\ 25'.$$

NUMBER OF TEETH.

The number of teeth in a side milling cutter may be a trifle greater than that of a plain milling cutter, because the former class of cutters usually are very much narrower than the latter. If N is the number of teeth and D the diameter of the cutter, the following formula for number of teeth corresponds with the practice of the Pratt and Whitney Company:

$$N = 3.1\,D + 11.$$

Thus the number of teeth in a cutter 5 inches in diameter would be

$$3.1 \times 5 + 11 = 15.5 + 11 = 26.5,$$

which of course must be 26 teeth. The number of teeth figured from this formula is given in Table XCIII.

TABLE XCIII.

NUMBER OF TEETH IN SIDE MILLING CUTTERS.

No. of teeth = 3.1 diam. + 11.

Diameter of Cutter.	Number of Teeth.	Diameter of Cutter.	Number of Teeth.
2	18	5½	28
2¼	18	6	30
2½	18	6½	32
2¾	20	7	32
3	20	7½	34
3½	22	8	36
4	24	9	38
4½	24	10	42
5	26	....	....

Relief of Teeth. — What has been previously said about the relief of plain milling cutters is equally applicable to side milling cutters. The relief on the side of these cutters need not, however, be as large as the relief on the face of the tooth. In fact, some manufacturers do not relieve their side milling cutters at all on the side, but that cannot be considered good practice. A slight relief is evidently called for if the tooth on the side is to be able to cut at all.

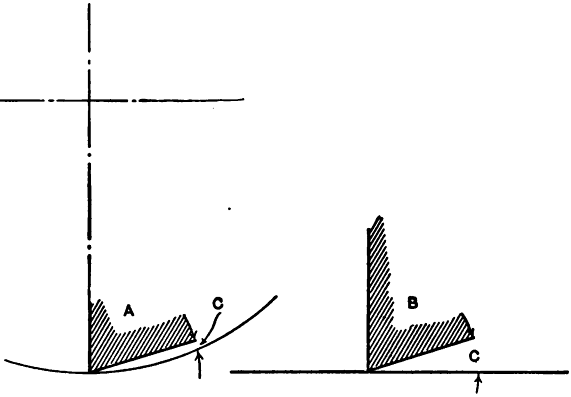

Fig. 176. Comparison between Relief of Teeth on the Cylindrical Surface and the Side of Cutter

The reason why the relief on the side of the cutter may and should be smaller than that on the face is very obvious if one considers the difference in the relationship of the tooth to the surface to be cut when this tooth is located on a circular and on a plain surface. Referring to the cut, Fig. 176, where the case is shown in exaggerated scale, it is easily seen that if the same angle of relief is given to the tooth *A* on a circular surface and to the tooth *B* on a flat surface (the side of the cutter) the actual relief *C* will be considerably larger on the tooth *B* and will be larger than the relief on the tooth *A* according to the diameter of the circle on which the tooth *A* is located. The same angle of relief gives a smaller actual relief *C* on a smaller diameter than on a large one.

Even if we do not consider this theoretically, there are practical reasons why the relief on the sides need not be as large as on the face; in fact, the main reason why a side milling cutter is preferable to a narrow, plain milling cutter for cutting slots is that the former has more chip room on the sides because of having teeth and consequently space for chips between them, thus making the sides of the slot smoother, whereas, when using the plain milling cutter, the chips will clog between the sides of the cutter and the sides of the slot, producing rough places in the work. It is well known that the actual cutting of a side mill is performed by the face; this is proven also by the fact that these cutters have to be ground more often on the face than on the sides.

It may be inferred that no relief at all on the sides is necessary if the teeth on the sides are not doing any actual work. However, there are occasions when these cutters will have to do actual work, and that is when no other cutter than a side milling cutter with the teeth relieved on the sides will produce desirable results, as, for example, when an absolutely straight slot is required to be cut. When cutting a slot a plain milling cutter will never cut its way straight through the work, because when once out of the straight line it has no means of correcting its path, but must follow the direction in which it started to cut, whereas a straddle milling cutter with its teeth relieved on the sides will, even if started wrong, have an opportunity of correcting its path by being able to cut with its sides. It may be said that if the cutter or cutter arbor is running out, the slot will obviously be wider than the cutter, but the slot will in all cases be straight. In this connection it is appropriate to mention various ways of making cutters that will maintain standard widths. This is accomplished by interlocking the cutters in such a manner as to permit adjustment after the cutters have been reduced in width by grinding on the sides or through wear.

INTERLOCKED CUTTERS.

There are three different ways of interlocking cutters in common use, viz.: (1) A straight slot through the center across one end of one cutter and a corresponding tongue on one end of the other cutter fitting loosely in the slot (Fig. 177); (2) Two or more sectors on one end of each of the two cutters cut away in such a manner that the remaining high sectors in the one cutter fit loosely into the spaces cut away in the other cutter (Fig. 178); (3) Opposite every other tooth on one side of each of the two cutters is cut away a portion, leaving a space into which the high portions of each of the cutters fit (Fig. 179).

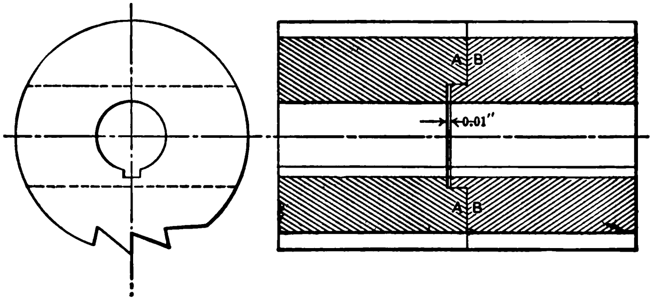

Fig. 177. Simplest Form of Interlocked Cutters

Referring to the first kind of interlock mentioned, it must be remarked that this interlock is poorly adapted for maintaining a standard width and is mostly used where cutters of unusual lengths are required which would be impractical, if not entirely impossible, to make in one piece. This interlock is to be recommended for such purposes because of its being very simple and inexpensive to make. It will be noticed from the cut that there ought to be a clearance of 0.010 inch between the bottom of the slot in one cutter and the top of the tongue in the other cutter, thus giving a resting surface between the two cutters at *A* and *B*, which faces ought to be ground. It may also be remarked that between the sides of the slot and the tongue there does not need to be a perfect fit and consequently these sides do not need to be ground. As mentioned above, this kind of interlock is not to be recommended for maintaining a standard width, although it could be used for such purpose by inserting thin pieces between the ground faces *A* and *B*.

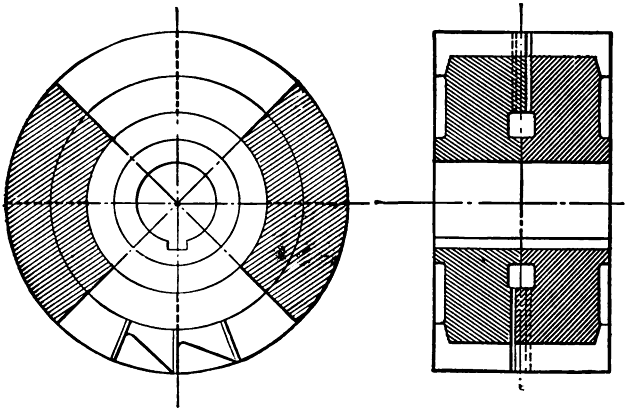

Fig. 178. Interlocked Cutters for Maintaining Standard Width

For maintaining a standard width, interlocks such as are shown in Figs. 178 and 179 are the most desirable. In these cases the cutters are provided with ground hubs, the width being maintained by inserting thin washers between these hubs. Between the hubs and the interlocking sections there should be an annular recess of sufficient width and depth to permit clearance for the milling cutter when milling out the sections for the interlock. If such a recess is not provided, or if it is not wide enough, the cutter will cut into the hub, causing an unfinished appearance as well as a poor surface for a good contact with the hub in the other cutter with which it is interlocked.

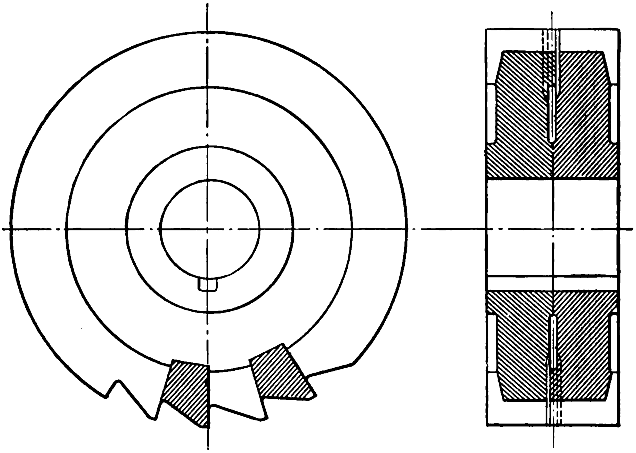

Fig. 179. Interlocked Cutters with Every Other Tooth Recessed

Cutters for Maintaining Standard Widths by Means of Beveled Faces. — In the February, 1905, issue of *Machinery*, Mr. E. R. Markham showed a method of making cutters for maintaining a standard width which he claims to be very satisfactory, and which has, he says, in many shops superseded the cutter with interlocking teeth for the purpose mentioned. This cutter is shown in Fig. 180. To make this form of cutter use an eccentric mandrel like that in Fig. 181. This mandrel has two sets of centers; the eccentric centers are located equidistant from the regular centers but on opposite sides, on the opposite ends, as shown. Half of the cutter is placed on the mandrel so that the end to be cut at an angle shall be halfway between the ends of the mandrel, as shown in Fig. 182. After facing the end *a* by running the mandrel on the concentric centers, the eccentric centers are placed on the lathe centers and the end *b* is faced as shown. The two parts are then put together on a stud and the hole drilled and reamed for the dowel pin, *a*, Fig. 180. The cutter is then placed in the vise of the shaper or planer and the key-way cut, after which the teeth are milled. The necessary adjustment for width of the slot is obtained by blocking apart by means of collars of tin, thin sheet steel, or paper.

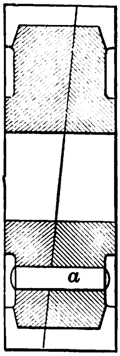

Fig. 180. Special Interlocked Milling Cutter

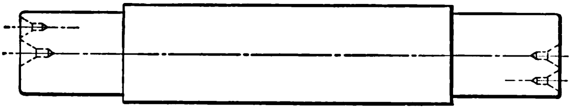

Fig. 181. Mandrel for Turning Halfs of Cutter shown in Fig. 180

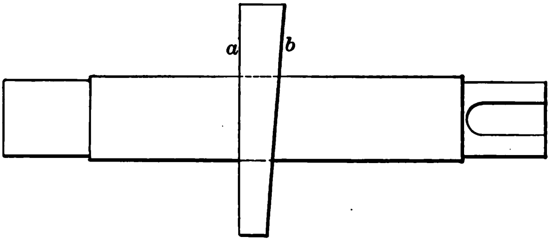

Fig. 182. Turning Cutter Halfs

Gang Cutters. — When two milling cutters, for instance, one plain and one side milling cutter, are used together in a gang, as it is usually termed, one should always let the teeth of the larger cutter project outside of the hub, as shown in Fig. 183, so that when cutting no ridge in the metal cut will result. When the cutters are of equal or nearly equal diameter, the common methods of interlocking evidently provide against any ridge being left in the surface milled. It is very important, whenever arranging milling cutters in a gang to finish a continuous width of surface, that all the cutters either interlock or project inside one another. In Fig. 184 is shown a gang of four cutters thus arranged. No ridge can be left at any place when this gang is put together in the manner shown.

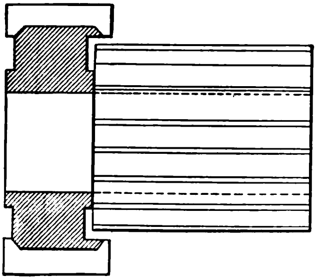

Fig. 183. Plain and Side Milling Cutters in Gang

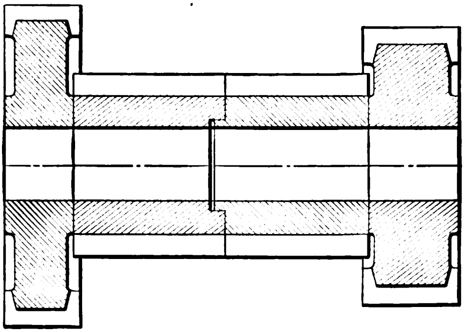

FIG. 184. Gang of Milling Cutters

HIGH-SPEED STEEL FOR MILLING CUTTERS.

In regard to the material which can most advantageously be used for milling cutters, opinions differ as to the higher efficiency gained by making the cutters from high-speed steel. Mr. Robert Grimshaw of Hannover, Germany, in *Machinery*, February, 1907, stated that his experience with high-speed steels has shown that while they would rough out about three to five times as fast as the carbon steels, they were not to be recommended either for finishing cuts on the lathe or for milling cutters, and that his own rather expensive experience was backed up by the results obtained by others in Germany.

It should hardly be necessary to say that the reason why we should not expect proportionately as good work in finishing as in roughing is that the new steels, almost without exception, require to be almost, if not quite, red hot in order that their molecules may arrange themselves in mechanical grouping or in chemical combination so as to give the maximum hardness, and that in consequence of the high speed required to get this temperature, and the tearing rather than cutting action, the surfaces obtained are not so smooth as those produced with the carbon steels.

The experiments of Prof. Haussner of Brunn, Germany, go to show that a slight increase in specific power required to produce turnings accompanies an increase in the speed of cutting; and this is at once the cause of the new tools getting hot when roughing and the reason why they cut so fast. But in finishing on the lathe or planer there is less heat developed than in roughing. In milling there is, in the first place, no machine that will give the speed required to make the tool red hot; and in the second place the weight and cross-section of the body of the mill, in proportion to the cutting portion proper, is so great that in any case the slight heat developed by the work is rapidly carried away from the point of application of the cutter. Further, the teeth are not constantly at work, as is the case with the point of a lathe tool; and each tooth has a chance to cool off "between bites." This being the case, we have not the combination of circumstances tending to produce that high temperature of the cutting point, or points, necessary in the case of the new steels to do fast work. In a paper before the American Society for Testing Materials, Mr. Metcalf said in effect: "As far as we know, the users of high-speed steel have not been able to make tools that will finish satisfactorily; therefore they use for this purpose carbon-steel tools, after they have done the heavier, rougher work with the high-speed steels." Although this was said about finishing in the lathe, it applies equally well to all milling operations, roughing and finishing alike, as the conditions encountered are in principle the same, as has already been pointed out.

While these experiences, of course, have their value, and while the reasoning underlying the opinions is undoubtedly correct, yet both in this country and in England a number of the leading manufacturers, who are users of milling cutters, find that although the cutting speed can be only slightly increased, so that the saving in time does not in itself outweigh the increased expense of material for cutters of high-speed steel, such cutters retain their cutting edges much longer than those made of ordinary tool steel; and this fact, when considering the question of economy, is nearly as important as that of high cutting speed.

In large shops, where several hundred milling cutters are in constant use, their grinding is a very important item in the expense account, and as high-speed steel cutters have to be ground less frequently, that is a distinct saving. The labor cost in the making of milling cutters is considerable, in many cases so great that the cost of material is small in comparison; and the greater the labor cost the more important it is to use material which adds to the cutter's life. The greater cost of high-speed steel becomes a heavy item in tools where the labor cost of making the tool is comparatively small; but in the case of a formed milling cutter, where the labor cost is large, the difference in the total cost between ordinary carbon steel and high-speed steel becomes insignificant.

In a discussion regarding the manufacture and up-keep of milling cutters, at a meeting of the Institution of Mechanical Engineers of Great Britain, one of the speakers called attention to one valuable property of high-speed steel, which he had not seen referred to, namely, that of withstanding shocks. In one of the railway shops in England the output of the crank-turning lathes had been practically doubled by the use of high-speed steel tools. The forgings were never very accurate, there being perhaps one-quarter inch to take off one side of the diameter, and 1½ inches off the other, and a tool suited to such wide variation was greatly appreciated. If the high-speed steel tool dug in, it did not break, as invariably happened with ordinary carbon steel.

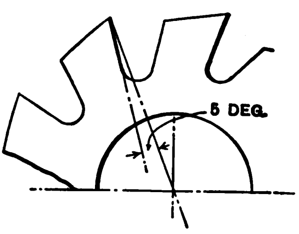

Fig. 185. Method of Making High-Speed Steel Cutters to Insure Long Service

Another speaker called attention to an important factor affecting the life of high-speed steel milling cutters. The teeth, besides being correctly relieved at the back, should have a front rake of 5 degrees, as indicated in Fig. 185. The number of teeth in milling cutters, particularly when made of high-speed steel, plays a very important part. A cutter made of this material with a large number of teeth has a considerably shorter life than one with fewer but deeper teeth. In a certain case two milling cutters, one with 16 teeth and one with 32 teeth, had been made. The one with the coarser teeth, of helical shape, would finish an article with as good a finish as the one with the finer pitched teeth, but the cost of making the coarse-pitched cutter was 35 per cent less than the cost of making the one with the fine-pitched teeth and the life of the coarse-pitched cutter was four or five times as long as that of the other.

CHAPTER IX.

MISCELLANEOUS MILLING CUTTERS

End Mills.

The end mill, as the name indicates, is a cutter having teeth on, and cutting with, the end rather than by the face as in the case of face or side mills. However, the end mill is provided with teeth on the face as well as on the end, as shown in Fig. 186. This kind of cutter is usually made with a solid shank, but is also made with a hole through it to fit a removable shank and is then termed shell end mill. Such a mill is shown in Fig. 187.

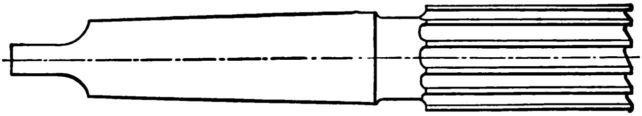

Fig. 186. End Mill with Taper Shank

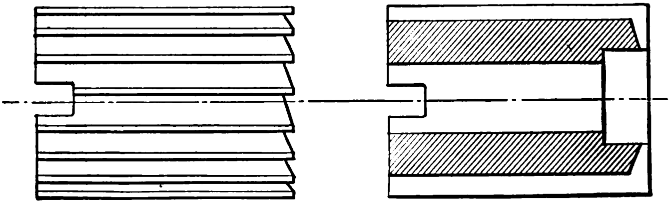

Fig. 187. Side View and Section of Shell End Mill

The end mill is a combination of a plain and side milling cutter, and can be used for milling surfaces parallel to the axis of the cutter as well as surfaces perpendicular to the axis. The teeth on the end are almost always radial, and without front rake. The teeth on the cylindrical surface are usually cut straight, but may be cut spiral as well. The object of the spiral is the same as in the case of face mills, viz., that the cut may be broken up into a number of smaller portions. The amount of spiral should not exceed 20 degrees.

Direction of Spiral. — The direction of the spiral in end mills is more important than in the case of plain mills, where the spiral may be in either direction. In Fig. 188 are shown two end mills, both cutting in the right-hand direction, but one with right-hand and one with left-hand spiral flutes. At first thought it seems as if a right-hand end mill should be given a right-hand spiral, the same as a twist drill. This would tend to force the chips out of the grooves, while a left-hand spiral would tend to force them down toward the cutting edges. The right-hand spiral, however, tends to draw the whole mill into the piece to be cut, the spiral acting as a thread of steep pitch. This is a very grave objection in that it loosens the mill shank, if tapered, from its socket, and may result in injury to the work in hand. Manufacturers of end mills, therefore, as a rule use a left-hand spiral for right-hand mills,

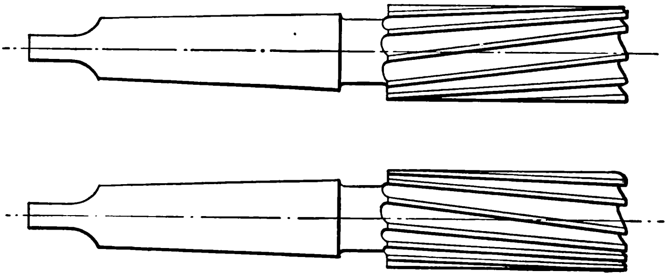

Fig. 188. Right- and Left-hand Spiral Cut End Mills.

and *vice versa*, notwithstanding that this produces a poorer cutting mill. Not only is there an obstruction to the chips freely moving out of the flutes, which is very important in taking deep cuts, but the teeth on the end get a negative front rake, as seen from the cut, and for this reason the mill is not suited to cut with the end, but will cut freely only with the teeth on the cylindrical sides. The fact that the left-handed spiral pushes the mill firmly into the socket is, however, considered to outweigh the disadvantages mentioned. If the mill is to be used as end mill only, then the spiral on a right-hand mill should be right hand, because the teeth can be given positive front rake. For ordinary use the end mill with teeth cut straight is preferable, as it does not cause any trouble of the kind referred to above.

Size of Shank. — Solid-shank end mills are usually provided with either Brown and Sharpe or Morse taper shank. In Table XCIV are given the different numbers of standard shanks corresponding to the ordinary sizes of end mills. In some cases two numbers are given, indicating that it is usual to make the mills in question with either of two sizes of shanks. The numbers of the shanks given for various sizes of mills correspond to the practice of end-mill manufacturers.

Dimensions. — The only dimension necessary to give in relation to end mills, besides the size of the shank, is the length of the cut, or the length of the cylindrical portion provided with cutting edges. This dimension is also given in Table XCIV, together with the number of teeth ordinarily cut in these mills. The length of the neck between the cutting part of the mill and the shank is unimportant, and should only be long enough to prevent the fluting cutter from cutting into the shank when the teeth are milled.

TABLE XCIV.

DIMENSIONS OF END MILLS.

Diameter of Mill.	Length of Cut.	Number of Teeth.	Number of Morse Taper Shank.	Number of B. and S. Taper Shank.
1/4	3/4	6	1	4, 5
5/16	7/8	8	1	4, 5
3/8	7/8	8	1	4, 5
7/16	1	8	1, 2	4, 5
1/2	1 1/8	8	1, 2	5, 7
9/16	1 1/4	8	1, 2	5, 7
5/8	1 3/8	10	2	5, 7
11/16	1 1/2	10	2	7, 9
3/4	1 5/8	10	2, 3	7, 9
7/8	1 3/4	10	2, 3	7, 9
1	1 7/8	10	2, 3	7, 9
1 1/8	2	12	3	7, 9
1 1/4	2	12	3, 4	7, 9
1 3/8	2 1/8	12	3, 4	9
1 1/2	2 1/4	14	3, 4	9
1 5/8	2 1/4	14	4	9
1 3/4	2 3/8	14	4	9
1 7/8	2 1/2	16	4	11
2	2 1/2	16	4	11

Milling the Teeth on the End of End Mills. — The milling of the teeth on the end of end milling cutters, and the selection of a cutter with a proper angle, require a great deal of judgment and care. It is almost impossible to give any definite rules or figures for the cutter to select, as this varies with the size and the number of teeth in the mill, as well as with the clearance it is wanted to give back of the cutting edge. The angle of the angular cutter used should, however, be selected between 55 and 75 degrees. If the cutter is settled upon, the proper angle to which to set over the index head in which the end mill is held (see Fig. 189) can be found by the rule already referred to in connection with the milling of the teeth on the sides of side milling cutters. This was given by Mr. George G. Porter in *Machinery*, April, 1904.

If

N = number of teeth in end mill,

V = angle of cutter with which teeth are cut, and

W = angle to which to set the index head in which the mill is held, then

$$\cos W = \tan \frac{360^\circ}{N} \times \cot V.$$

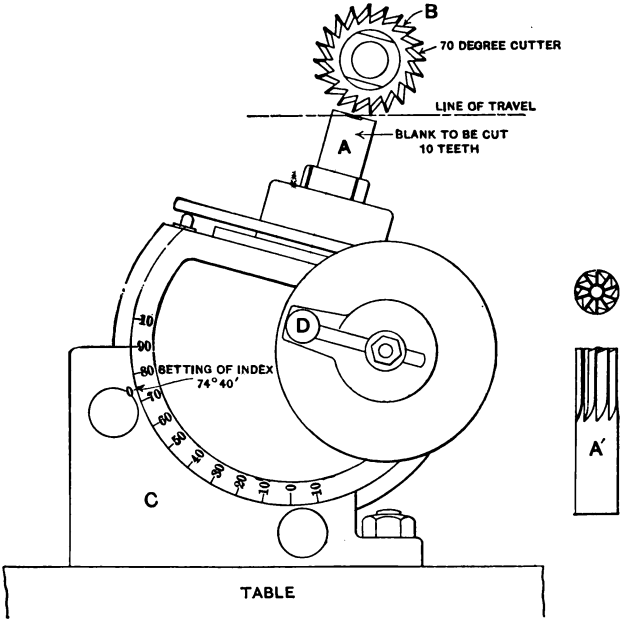

Fig. 189. Milling the Teeth on the End of End Mills

The use of this formula is best explained by an example. Suppose that an end mill is to be made having 10 teeth, and that a 70-degree cutter will be used for cutting the teeth. We have then

$$\cos W = \tan 36^\circ \times \cot 70^\circ = 0.727 \times 0.364 = 0.264.$$

From this we have $W = 74^\circ\,40'$.

End Mills With Center Cut. — When it is necessary to cut into the surface of a piece of work with the end of the mill and then feed along, as in die work, internal cams, etc., the teeth are sharpened or given clearance on the inside, and so are able to cut a path from the point where the mill is sunk into the work. The teeth, being very coarse, allow of heavy cuts. This is especially the case when cast iron is the material being machined. After cutting the teeth on the end of the mill a thin metal splitting saw of comparatively small diameter should be run through close to the face of each tooth, making the cut shown in Fig. 190 at *A*. This cut is to permit backing off the inner edge of the tooth, which gives the mill a cutting tooth on the inside as well as on the outside, and allows it to cut away the projection made when the mill is fed into the work.

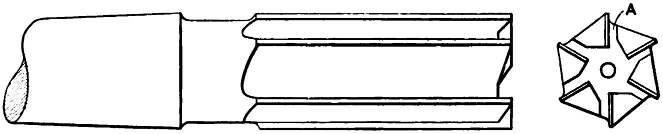

Fig. 190. End Mill with Center Cut

As mentioned, the number of teeth in end milling cutters with center cut is smaller than that in ordinary end mills. It is customary to put in four teeth for sizes smaller than one-half inch, six teeth for sizes from one-half to 1¼ inches inclusive, and eight teeth for sizes up to 2 inches.

In ordinary end mills there is a recess in the end the same as in end mills with center cut, but the teeth are not sharpened on their inside edge. The object of recessing the end in that case is to furnish a cavity for the entrance of the cutter that is used to cut the teeth on the end. It also facilitates the operation of grinding the teeth on the end.

Shell End Mills. — Shell end mills, Fig. 187, do not differ in principle from ordinary end mills. They are mounted on arbors such as are shown in Fig. 191. The head of the screw in the end of the arbor fits into the recess in the end of the mill. The keys *A* fit into the key-ways at the upper end of the mill, and constitute the drive.

The important dimensions of shell end mills are given in Table XCV. The number of teeth in these mills is larger for the same diameters than the number in solid end mills, because the coarser teeth of the latter would require a deeper flute than would be permissible in the thin shell of shell end mills.

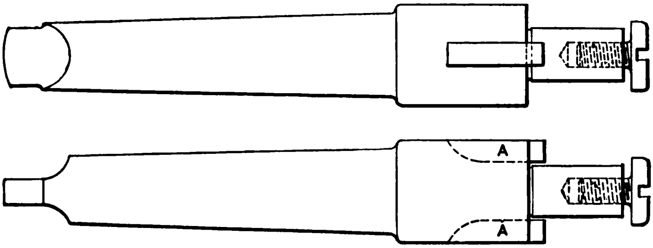

Fig. 191. Arbor for Shell End Mills

TABLE XCV.

GENERAL DIMENSIONS OF SHELL END MILLS.

Diam. of Mill.	Total Length.	Diam. of Hole.	No. of Teeth.	Diam. of Mill.	Total Length.	Diam. of Hole.	No. of Teeth.
$1\frac{1}{4}$	$1\frac{1}{4}$	$\frac{1}{2}$	16	$2\frac{1}{8}$	2	$\frac{3}{4}$	18
$1\frac{5}{16}$	$1\frac{1}{4}$	$\frac{1}{2}$	16	$2\frac{1}{4}$	2	$\frac{3}{4}$	18
$1\frac{3}{8}$	$1\frac{1}{4}$	$\frac{1}{2}$	16	$2\frac{3}{8}$	2	$\frac{3}{4}$	18
$1\frac{7}{16}$	$1\frac{1}{4}$	$\frac{1}{2}$	16	$2\frac{1}{2}$	2	$\frac{3}{4}$	18
$1\frac{1}{2}$	$1\frac{1}{4}$	$\frac{5}{8}$	16	$2\frac{5}{8}$	2	1	20
$1\frac{5}{8}$	$1\frac{1}{4}$	$\frac{5}{8}$	18	$2\frac{3}{4}$	2	1	20
$1\frac{3}{4}$	$1\frac{1}{4}$	$\frac{5}{8}$	18	$2\frac{7}{8}$	2	1	20
$1\frac{7}{8}$	$1\frac{1}{4}$	$\frac{5}{8}$	18	3	2	1	20
2	$1\frac{1}{4}$	$\frac{5}{8}$	18	......	......	......	......

ANGULAR MILLING CUTTERS.

Angular milling cutters are provided with teeth on the angular face and on one side as shown in Fig. 192. They are usually made with the angle *A* 45, 50, 60, 70, or 80 degrees for regular purposes. They are used mainly for fluting milling cutters. They are designated by the angle *A*, so that a 60-degree angular cutter means one having this angle 60 degrees. Angular milling cutters are ordinarily made in three sizes, $2\frac{1}{2}$, $2\frac{3}{4}$, and 3 inches in diameter, all one-half inch thick, with 1-inch hole in the two smaller sizes and $1\frac{1}{4}$-inch hole in the largest. A recess *B* is turned in the side of the cutter provided with teeth. The depth of this recess may be made five-sixty-fourths inch and the diameter $1\frac{5}{8}$, $1\frac{7}{8}$, and $2\frac{1}{8}$ respectively, according to the diameter of the cutter.

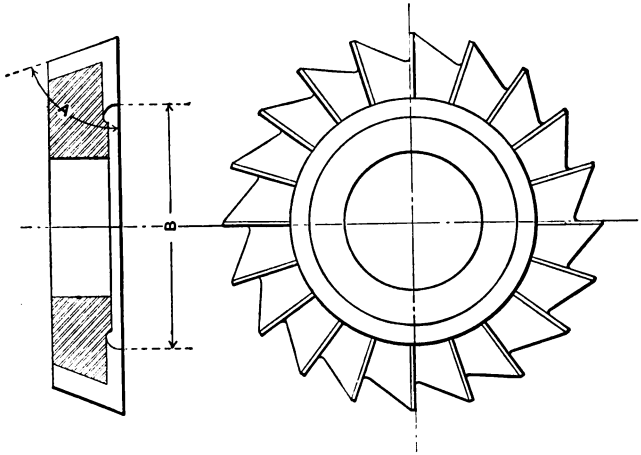

Fig. 192. Angular Milling Cutter

The number of teeth in angular cutters is made 20, 22, and 24 respectively for the three different sizes of cutters.

The cutter shown in the cut is termed right hand. The cutter is ordinarily mounted on the milling-machine arbor with the side without teeth toward the milling-machine head.

CUTTERS FOR FLUTING SPIRAL-TEETH MILLING CUTTERS.

Cutters for fluting spiral-teeth milling cutters, usually termed cutters for spiral mills, are ordinarily made with a 52-degree inclusive angle, as shown in Fig. 193, 12 degrees on one side and 40 degrees on the other. However, this cutter produces a rather weak tooth, and it is preferable to make the 40-degree angle on the one side equal to 48 degrees, the inclusive angle then being equal to 60 degrees. These cutters are, of course, nothing but double angle cutters. The one shown in the cut is termed a left-hand cutter; that is, when mounted on the arbor of a milling machine the

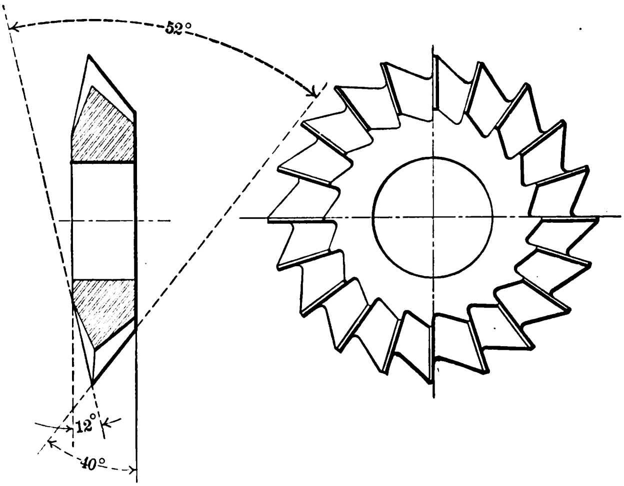

Fig. 193. Cutter for Fluting Spiral Teeth Milling Cutters

side with the larger angle, the 40- or 48-degree angle, should be toward the machine. The manner in which these cutters are used is shown in Fig. 194, where *C* is the cutter being milled and *A* the cutter for cutting the spiral grooves.

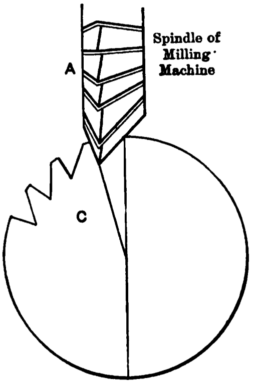

Fig. 194. Setting Cutter in Fig. 193 when Fluting Milling Cutter

Cutters for spiral mills are usually made in three sizes only, 2½, 2¾, and 3 inches diameter; the width is made one-half inch in all, and the hole 1 inch in the two smaller sizes and 1¼ inches in the largest. The number of teeth is made 18, 20, and 22 respectively for the three sizes. The teeth are cut with angular cutters, the 40- or 48-degree side with a 60-degree cutter and the 12-degree side with a 75-degree cutter.

FIXTURE FOR GRINDING ANGULAR MILLING CUTTERS.

Fig. 195 shows a little device which has proved itself very useful in grinding angular milling cutters when a perfect angle is required. This device was shown in *Machinery*, January, 1908, by Mr. P. Yorgensen. A radius at the point of the angle can also be ground, radius and angle being ground at one setting. This fixture consists of a base plate *C*, which is clamped to the grinder table so that it can be fed to and from the wheel by the feed arrangement on the grinder. On this base plate rests a triangular plate *D*, carried on three feet. This latter plate is free to move in all directions, simply sliding on its feet on the plate *C*, and is guided only by the hands of the operator. In this triangular plate *D* there is a slot *E*, into which a tongue of the bracket *F* is fitted, this bracket then being movable back and forth on the plate *D*, and having arrangement for clamping in any position. The cutters *A* are clamped to this bracket *F* by a suitable screw and washer. For different widths of cutters, either different brackets must be employed or washers may be interposed between the bracket and the cutter, because it is evident that the center line of the cutter must always coincide with the center line of the triangular plate *D*. The cutter can be set to any given radius between the two angular faces by placing a gauge block, having the same thickness as the radius wanted, against the side of the triangular block, and placing a square against the gauge, and adjusting the cutter so that

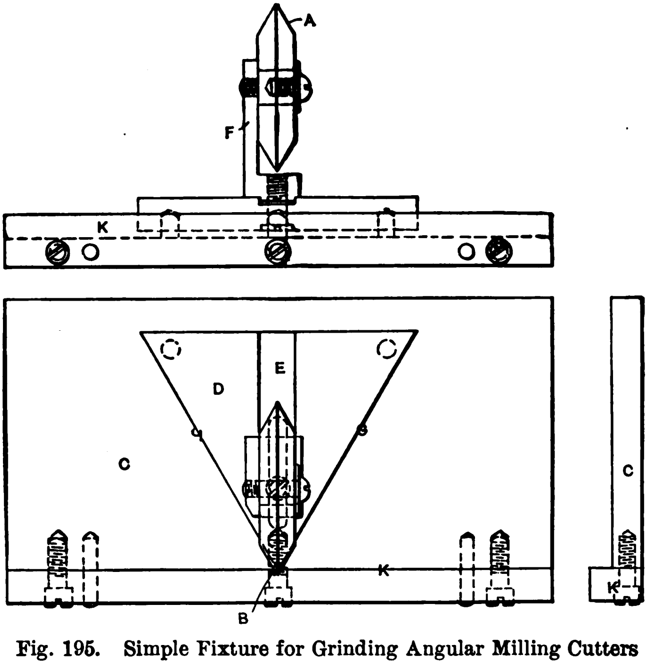

Fig. 195. Simple Fixture for Grinding Angular Milling Cutters

the blade of the square just touches the angular face of the teeth of the cutter *A*. If, for instance, we have a cutter that we want to grind to a 60-degree angle, and want one-sixteenth-inch radius at the point, we simply set the cutter central with the triangular block and place a one-sixteenth-inch gauge block between the square and the side of the block, and then adjust the cutter until it touches the blade of the square. The cutter is then clamped in place. The grinding itself is performed by sliding the plate *D* first to one side and then to the other, so that the sides *G* and *H* alternately rest against the guide *K* on the bed plate *C*, the side of the teeth of the cutter being meanwhile moved back and forth across the face of the grinding wheel. The turning around of the triangular block from one side to the other with the point *B* against the guide *K* evidently produces a radius at the point of the cutter between the two angular sides. The height of the cutter tooth in a horizontal direction, when setting, is determined by a gauge block of such a height that the tooth face is in a horizontal plane with the center line of the cutter. The cutters are formed closely, before hardening and grinding, to the desired shape, so that there is but a few thousandths inch left to be removed when grinding.

FORMED CUTTERS.

While " formed " cutters may be provided either with regular milling cutter teeth or with eccentrically relieved teeth, the common usage of the term is for cutters with eccentrically relieved teeth only. Such a cutter is shown in Fig. 196. The formed cutter is intended for milling surfaces of irregular form, and the teeth are so constructed that their form is exactly the same all the way from *a* to *b*. In order to give clearance to the cutting edge the tooth is backed off along the periphery of a circle which is eccentric with the outside periphery of the cutter itself, hence the name eccentrically relieved. Owing to the peculiarity in the construction of the cutter tooth, the face *c* can be ground off, in order to sharpen the tooth, without changing the form cut by the cutter. This grinding may be continued until only a very small part of the tooth remains. A well used up cutter is shown in Fig. 197.

Formed milling cutters are first turned up in an ordinary lathe to the simple outlines of the form. A forming tool is then applied, by means of which the cutter is shaped to the desired form. This forming tool must be of the exact form wanted on its top face, but must be provided with clearance, usually 15 degrees. The cutter is then fluted, or the teeth cut. After this the cutter is brought back to the lathe and relieved. The lathe should be provided with a relieving attachment for the performance of this operation. Of course, by elaborate devices a cutter may be relieved in any lathe, but the time consumed in doing the work under such difficulties as present themselves is too great to be contemplated at the present time when

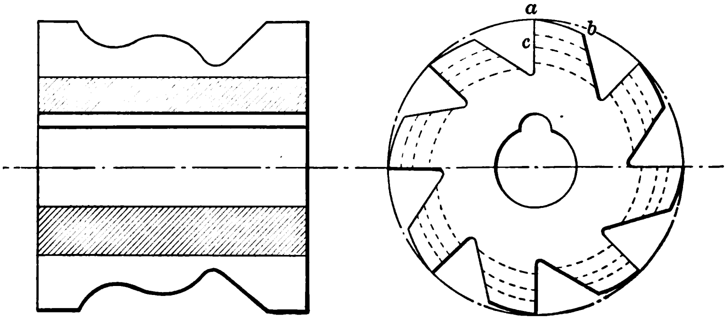

Fig. 196. Eccentrically Relieved Milling Cutter

there exist excellent facilities for performing this operation. Manufacturers of eccentrically relieved cutters employ special machines for this work, which are suited for performing this operation only. After hardening, the cutters are ground on the front faces of the teeth only.

In making or laying out formed cutters care should be taken, as far as possible, not to have any part or surfaces of the teeth at right angles to the axis of the cutter, as shown at *a*, Fig. 198. It is evident that this part would not be relieved, because the *width* of the forming tool used for relieving is constant. And even if this portion *a* were relieved by filing or in some other manner, when the tooth were ground, the space between the faces *a* and *b* would become wider and the exact form would be lost. Whenever possible, all surfaces should be given an inclination of at least 5 degrees to the line perpendicular to the axis of the cutter. This will permit the forming tool to

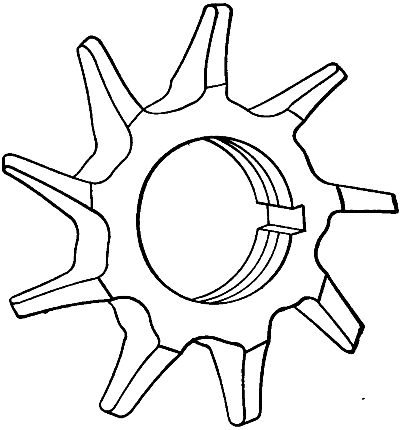

Fig. 197. Formed Milling Cutter having been used until but a Small Part of the Tooth remains

slightly relieve the whole tooth form; the cutter will consequently cut easier, and at the same time retain its shape when ground.

Interlocking Formed Cutters. — At times formed cutters must be provided with surfaces which are perpendicular to the axis of the cutter. In order to make these cutters cut freely the perpendicular face is relieved by means of filing. As said before, the grinding on the face of the tooth will then widen the form or lengthen the distance *a*, Fig. 199. In order to overcome this difficulty, such cutters are often interlocked so that the hubs which rest against each other may be ground off at the same time as the faces of the teeth are ground, thus bringing the distance *a* back to the original dimension. But it must be remembered that this way of overcoming the difficulty is permissible only when the width *a* is the most essential

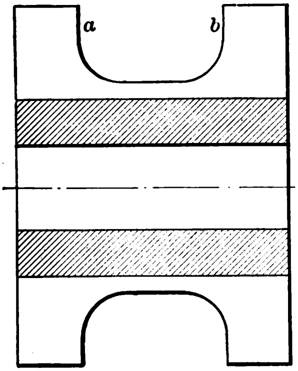

Fig. 198. Undesirable Construction of Formed Cutter

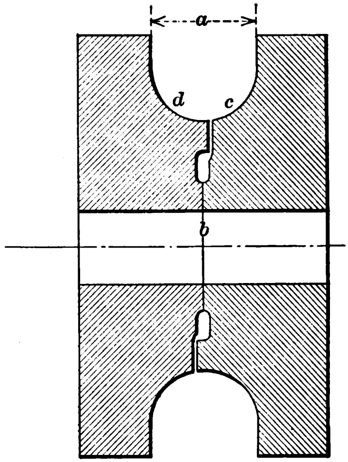

Fig. 199. Interlocked Formed Cutter

dimension and the form otherwise can stand slight changes, because the grinding off of the hubs at *b* will evidently bring the curved parts *c* and *d* closer together, and thus slightly change the shape of the cutter, while a standard width *a* is maintained. This is often overlooked, but unless it is taken into consideration interlocking of formed milling cutters of the kind mentioned for retaining a standard width is not permissible, and shows an incomplete conception of the principles involved in and the purpose of eccentrically relieved cutters.

Number of Teeth. — The spacing of the teeth in eccentrically relieved cutters is far coarser than in ordinary milling cutters. The reason for this is obvious. The tooth itself is so much wider than the ordinary milling-cutter tooth, and the space required between the teeth should be fairly wide, although not necessarily as wide as required for ordinary teeth. The formed cutter cannot cut as heavy chips as the regular milling cutter, and consequently there is no need for quite as much chip room between the teeth. There can be no exact rule given for the number of teeth, as this must, to some extent, vary with the form of the cutter, that is, whether the difference between the largest and smallest cutting diameters is large or small, and also with the diameter of the cutter. In this particular there is no way of determining the correct number but by judgment and experience.

The cutters used to mill the grooves in eccentrically relieved cutters of all kinds vary according to the diameter of the cutter and the number and depth of the teeth. In general an angular cutter of 35 degrees inclusive angle is used, but this angle may vary from 30 to 45 degrees.

Concave, Convex, and Corner-rounding Cutters. — The most common of all formed cutters, outside of gear-teeth cutters, which form a class by themselves, are concave, convex, and corner-rounding cutters, as shown in Figs. 200, 201, and 202. The corner-rounding cutter may be of two kinds, single or double. It is a distinct improvement on this cutter not to let the rounded part be a full quarter of a circle, but to let it be made with a tangent 5 degrees to a line perpendicular to the axis of the cutter as shown in Fig. 200. This permits the whole cutting edge of the cutter to be relieved, and at the same time prevents any ridge being visible in the piece worked upon by the cutter, as the side of the tooth gradually recedes from the work instead of being perfectly parallel to it.

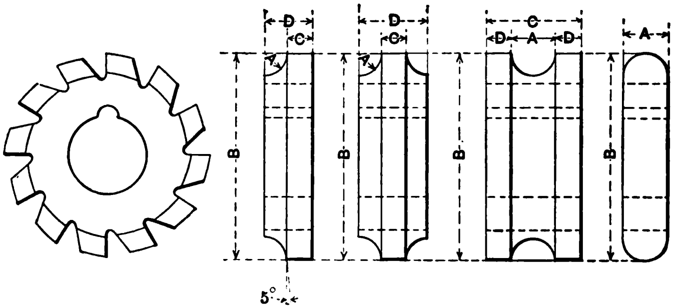

Figs. 200, 201, and 202. Single and Double Corner-rounding Cutters, Concave Cutter, and Convex Cutter

Approximate dimensions for the common sizes of these cutters are given in Tables XCVI, XCVII, XCVIII, and XCIX. The diameters as given are for cutters with one-inch hole. If the hole is larger or smaller than one inch, the diameter of the cutter must vary accordingly. For sizes not given in these tables the following formulas will give correct proportions for cutters with one-inch holes.

Corner-rounding cutters:

$$B = \frac{5A}{2} + 2 \text{ inches},$$

$$C = \frac{A}{2} + \tfrac{1}{8} \text{ inch},$$

$$D = \frac{A}{3} + \tfrac{1}{8} \text{ inch for single, and}$$

$$D = \frac{A}{5} + \tfrac{1}{8} \text{ inch for double corner-rounding cutters.}$$

Concave and convex cutters:

$$B = \frac{A}{4} + 2 \text{ inches},$$

$$C = \frac{11A}{8} + \tfrac{1}{4} \text{ inch (concave cutters only)},$$

$$D = \frac{3A}{16} + \tfrac{1}{8} \text{ inch (concave cutters only).}$$

For the denotation of the letters in these formulas see Figs. 200, 201, and 202.

TABLE XCVI.

SINGLE CORNER-ROUNDING CUTTERS.

(See Fig. 200.)

Size of Radius.	Diam. of Cutter.	Width of Flange.	Total Width.	No. of Teeth.	Size of Radius.	Diam. of Cutter.	Width of Flange.	Total Width.	No. of Teeth.
A	*B*	*C*	*D*		*A*	*B*	*C*	*D*	
$\frac{1}{16}$	$2\frac{1}{4}$	$\frac{5}{32}$	$\frac{7}{32}$	16	$\frac{1}{2}$	$3\frac{1}{4}$	$\frac{3}{8}$	$\frac{7}{8}$	10
$\frac{3}{32}$	$2\frac{1}{4}$	$\frac{3}{16}$	$\frac{9}{32}$	16	$\frac{9}{16}$	$3\frac{1}{2}$	$\frac{13}{32}$	$\frac{31}{32}$	10
$\frac{1}{8}$	$2\frac{1}{4}$	$\frac{3}{16}$	$\frac{5}{16}$	16	$\frac{5}{8}$	$3\frac{1}{2}$	$\frac{7}{16}$	$1\frac{1}{16}$	8
$\frac{5}{32}$	$2\frac{1}{2}$	$\frac{7}{32}$	$\frac{3}{8}$	12	$\frac{11}{16}$	$3\frac{3}{4}$	$\frac{15}{32}$	$1\frac{5}{32}$	8
$\frac{3}{16}$	$2\frac{1}{2}$	$\frac{7}{32}$	$\frac{13}{32}$	12	$\frac{3}{4}$	$3\frac{3}{4}$	$\frac{1}{2}$	$1\frac{1}{4}$	8
$\frac{7}{32}$	$2\frac{1}{2}$	$\frac{1}{4}$	$\frac{15}{32}$	12	$\frac{13}{16}$	4	$\frac{1}{2}$	$1\frac{5}{16}$	8
$\frac{1}{4}$	$2\frac{1}{2}$	$\frac{1}{4}$	$\frac{1}{2}$	12	$\frac{7}{8}$	$4\frac{1}{4}$	$\frac{9}{16}$	$1\frac{7}{16}$	8
$\frac{5}{16}$	$2\frac{3}{4}$	$\frac{9}{32}$	$\frac{19}{32}$	10	$\frac{15}{16}$	$4\frac{1}{4}$	$\frac{9}{16}$	$1\frac{1}{2}$	8
$\frac{3}{8}$	3	$\frac{5}{16}$	$\frac{11}{16}$	10	1	$4\frac{1}{2}$	$\frac{5}{8}$	$1\frac{5}{8}$	8
$\frac{7}{16}$	3	$\frac{11}{32}$	$\frac{25}{32}$	10	......	......	......	......	......

TABLE XCVII.

DOUBLE CORNER-ROUNDING CUTTERS.

(See Fig. 200.)

Size of Radius.	Diam. of Cutter.	Width of Flange.	Total Width.	No. of Teeth.	Size of Radius.	Diam. of Cutter.	Width of Flange.	Total Width.	No. of Teeth.
A	*B*	*C*	*D*		*A*	*B*	*C*	*D*	
1/16	2 1/4	5/32	9/32	16	1/2	3 1/4	3/8	1 3/8	10
3/32	2 1/4	3/16	3/8	16	9/16	3 1/2	13/32	1 17/32	10
1/8	2 1/4	3/16	7/16	16	5/8	3 1/2	7/16	1 11/16	8
5/32	2 1/2	7/32	17/32	12	11/16	3 3/4	15/32	1 27/32	8
3/16	2 1/2	7/32	19/32	12	3/4	3 3/4	1/2	2	8
7/32	2 1/2	1/4	11/16	12	13/16	4	1/2	2 1/8	8
1/4	2 1/2	1/4	3/4	12	7/8	4 1/4	9/16	2 5/16	8
5/16	2 3/4	9/32	29/32	10	15/16	4 1/4	9/16	2 7/16	8
3/8	3	5/16	1 1/16	10	1	4 1/2	5/8	2 5/8	8
7/16	3	11/32	1 7/32	10	......	......	......	......	......

TABLE XCVIII.

DIMENSIONS OF CONCAVE CUTTERS.

(See Fig. 201.)

Diam. of Circle.	Diam. of Cutter.	Width of Cutter.	Width of Flanges.	No. of Teeth.	Diam. of Circle.	Diam. of Cutter.	Width of Cutter.	Width of Flanges.	No. of Teeth.
A	*B*	*C*	*D*		*A*	*B*	*C*	*D*	
1/8	2 1/4	7/16	5/32	16	7/8	3	1 7/16	9/32	10
3/16	2 1/4	1/2	5/32	16	15/16	3 1/4	1 9/16	5/16	10
1/4	2 1/4	9/16	5/32	16	1	3 1/4	1 5/8	5/16	10
5/16	2 1/2	11/16	3/16	12	1 1/8	3 1/2	1 13/16	11/32	10
3/8	2 1/2	3/4	3/16	12	1 1/4	3 1/2	1 15/16	11/32	8
7/16	2 1/2	7/8	7/32	12	1 3/8	3 3/4	2 1/8	3/8	8
1/2	2 1/2	15/16	7/32	12	1 1/2	3 3/4	2 5/16	13/32	8
9/16	2 3/4	1	7/32	10	1 5/8	4	2 1/2	7/16	8
5/8	2 3/4	1 1/8	1/4	10	1 3/4	4 1/4	2 5/8	7/16	8
11/16	2 3/4	1 3/16	1/4	10	1 7/8	4 1/4	2 13/16	15/32	8
3/4	3	1 1/4	1/4	10	2	4 1/2	3	1/2	8
13/16	3	1 3/8	9/32	10	......	......	......	......	......

TABLE XCIX.

DIMENSIONS OF CONVEX CUTTERS.

(See Fig. 202.)

Diameter of Circle.	Diameter of Cutter.	Number of Teeth.	Diameter of Circle.	Diameter of Cutter.	Number of Teeth.
A	*B*		*A*	*B*	
$\frac{1}{8}$	$2\frac{1}{4}$	16	$\frac{7}{8}$	3	10
$\frac{3}{16}$	$2\frac{1}{4}$	16	$\frac{15}{16}$	$3\frac{1}{4}$	10
$\frac{1}{4}$	$2\frac{1}{4}$	16	1	$3\frac{1}{4}$	10
$\frac{5}{16}$	$2\frac{1}{2}$	12	$1\frac{1}{8}$	$3\frac{1}{2}$	10
$\frac{3}{8}$	$2\frac{1}{2}$	12	$1\frac{1}{4}$	$3\frac{1}{2}$	8
$\frac{7}{16}$	$2\frac{1}{2}$	12	$1\frac{3}{8}$	$3\frac{3}{4}$	8
$\frac{1}{2}$	$2\frac{1}{2}$	12	$1\frac{1}{2}$	$3\frac{3}{4}$	8
$\frac{9}{16}$	$2\frac{3}{4}$	10	$1\frac{5}{8}$	4	8
$\frac{5}{8}$	$2\frac{3}{4}$	10	$1\frac{3}{4}$	$4\frac{1}{4}$	8
$\frac{11}{16}$	$2\frac{3}{4}$	10	$1\frac{7}{8}$	$4\frac{1}{4}$	8
$\frac{3}{4}$	3	10	2	$4\frac{1}{2}$	8
$\frac{13}{16}$	3	10	....	....	....

IMPORTANCE OF GRINDING ECCENTRICALLY RELIEVED CUTTER TEETH RADIALLY.

A leaflet calling attention to the need of grinding eccentrically relieved cutter teeth radially in order to secure satisfactory results was issued in 1907 by the Union Twist Drill Company, Athol, Mass., and from it is reproduced the accompanying illustration, Fig. 203, for the sake of conveying some elementary instruction in the art of grinding formed cutters. The cut shows, diagrammatically, how the teeth should be ground to secure the best results; it also illustrates improper grinding. The teeth *A* and *B*, of course, are ground correctly. The lines *AC* and *BC*, lying in the plane of the cutting face, are radial; that is, the faces of the teeth would pass directly through the center of the cutter if projected to the center. Tooth *D*, however, shows an entirely different condition, and one which, unfortunately, is not uncommon in gear-cutting practice. The top of the tooth is ground back faster than the base, thus throwing the face of the cutter into the plane indicated by the line *DE*; consequently the shape of the tooth space cut is distorted, and a gear with badly shaped teeth must necessarily be produced by it.

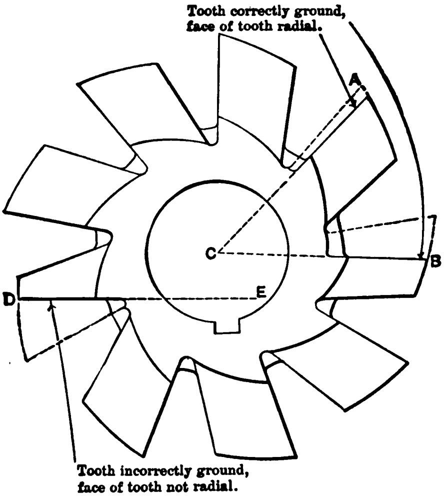

Fig. 203. Correctly and Incorrectly Ground Teeth of Eccentrically Relieved Cutter

The expression "may be ground without changing the form" has evidently been taken too literally and without the necessary qualification that it is necessary to grind in a plane radial with the center of the cutter in order that the form shall not be changed. It is evident to any one who will give the matter a little thought that if a gear is cut with a gear cutter having teeth ground like *D* the resulting tooth space will be too wide at the top if the cutter is carried to the correct depth. Moreover, such a gear cutter works badly, as the cutting faces of the teeth have a negative rake. The importance of correct grinding of all formed cutters cannot be too strongly emphasized. Unfortunately, formed cutters that can be ground without changing the form do not always have sufficient clearance to work well with all classes of work, and if such cutters are carelessly used there will be heating and rapid wearing away of the tops of the teeth. If hard pressed and ignorant, the tendency of the grinding operator, in order to hurry the sharpening of such cutters, is to incline the wheel away from the radial plane.

On account of this defect in formed cutters, one large concern making small tools has found it profitable in the use of certain formed cutters to make them the same as an ordinary milling cutter, with the same rake and clearance as is the usual practice. When the cutters require sharpening, the teeth are ground on *top*, using a fixture which preserves the correct tooth shape. This concern has found the practice good, for the cutters are much more effective in action, and notwithstanding the increased cost of grinding, the increased efficiency more than makes up for the difference.

Of course in grinding eccentrically relieved cutters it is equally important that all teeth be ground to the same length as that they be ground off radially.

FORMING TOOLS.

In connection with formed cutters it will be appropriate to give some attention to forming tools. These are used either in the lathe or screw machine for duplicate work, or for forming and relieving formed milling cutters, which in turn are used to produce a great many pieces of exactly the same shape. When made for use in lathes or screw machines, they may be either flat or circular, but when used for forming and relieving milling cutters they are always made flat. For screw-machine work the circular form is the most common.

Flat forming tools may either be made solid with the shank, like an ordinary lathe tool, or the tool may be merely a cutter formed to the desired shape and held in a holder. The tool is made solid with the shank only in the case of very simple forms. Where forms are more complicated, the tool should be made in a separate piece, and provision made for holding it securely in a tool holder or tool clamping device.

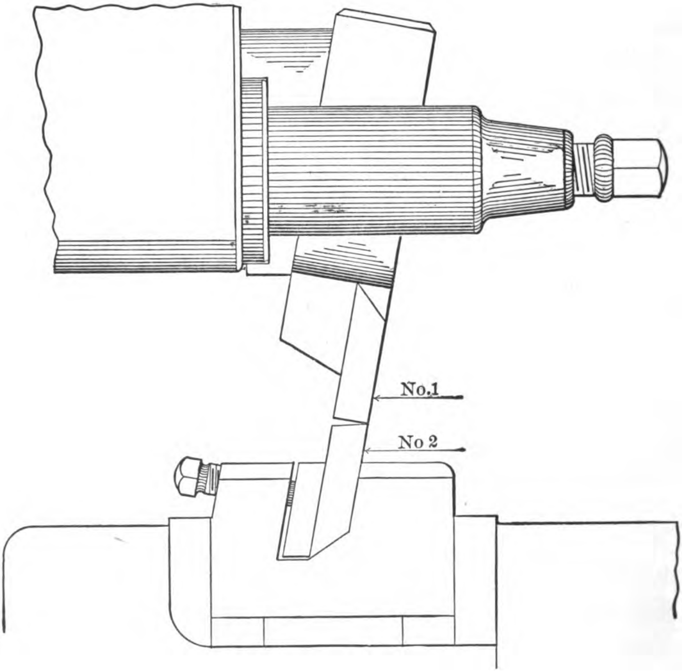

Fig. 204. Making a Forming Tool in the Shaper

The flat forming tool is first laid out on the piece from which it is to be made, and machined to the desired form without giving any clearance to the tool. In order to obtain a tool with clearance, this first tool made, termed master tool, is used to produce a second tool. The clearance in this second tool is secured by the process shown in Fig. 204. The master tool is held at an angle in the toolpost of a shaper, and the blank from which the second forming tool is to be made is clamped to the shaper table, being held in a vise at the same angle of incline as the master tool. When the master tool, No. 1 in Fig. 204, commences to form the tool No. 2, it is evident that the face of the latter will become an exact duplicate of No. 1, but being held in an angular position, a clearance corresponding to this inclination is produced. The common angle of clearance on forming tools is 15 degrees. Forming tools used for relieving formed milling cutters are frequently made with a clearance of 25 degrees. This is necessary in order to prevent the tool from interfering with the following tooth of the cutters when the one opposite the tool is being relieved.

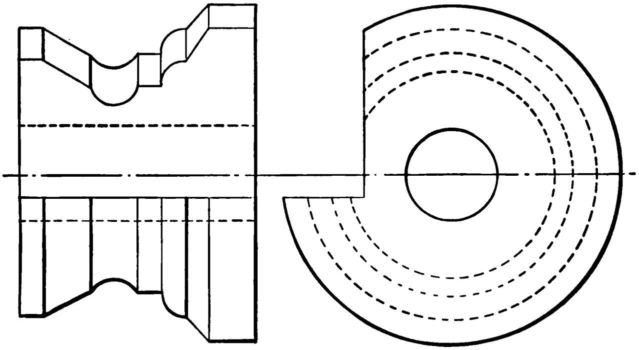

Fig. 205. Circular Forming Tool with Clearance for Cutting Edge

Circular Forming Tools. — Circular forming tools are used to a great extent in screw machines, as mentioned. They are easily made either by a forming tool, being formed in the same manner as a milling cutter, or by ordinary turning if the shape of the finished tool is not too complicated. In order to provide for a cutting edge the tool must be milled as shown in Fig. 205. If the piece to be formed should be a true duplicate of the forming tool it would be necessary to mill down the forming tool to a radial line only, as shown in Fig. 206. But the tool in such a case does not receive a proper amount of front rake or clearance to cut freely. For this reason the tool is milled down from one-quarter to three-eighths inch below the center, and in making the forming tool the dimensions must be so adjusted that when the tool is milled and ground as mentioned, the desired form is reproduced in the pieces to be made. The allowance to be made must be determined in each case by calculation.

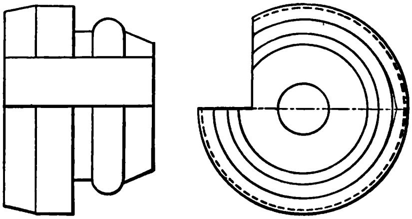

Fig. 206. Forming Tool without Clearance

In Fig. 207, *BC* represents the actual distance to be reproduced in the piece of work to be made. But it is evident that the difference between the radii *OC* and *OB* is less than *BC*. As the radii *OC* and *OB* determine the shape of the forming tool, these dimensions must stand in an exact relation to the actual distance *BC* to be reproduced. This relationship is expressed by the formula

$$BC = \sqrt{OC^2 - OA^2} - \sqrt{OB^2 - OA^2}.$$

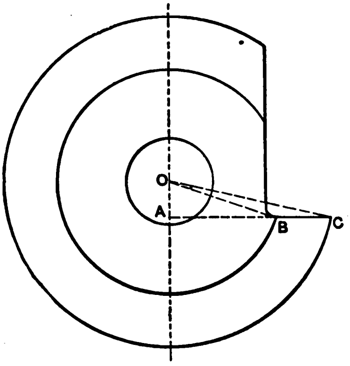

Fig. 207

This relationship may be better expressed by a general formula. The distance *A*, Fig. 208, in a piece to be formed must equal the distance *a* on the forming tool, but as this latter distance is measured in a plane a certain distance *b* below the horizontal plane through the center of the forming tool, it is evident that the differences of diameters in the tool and the piece to be formed are not the same. A general formula may, however, be deduced, by the use of elementary geometry, by means of which various diameters of the forming tool may be determined if the largest (or smallest) diameter of the tool, the amount that the cutting edge is below the center, and, of course, the diameters of the piece to be formed, are known.

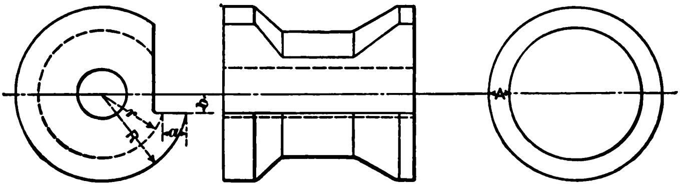

Fig. 208

If R = the largest radius of the tool,
a = difference in radii of steps, and
b = amount cutting edge is below center,

then, if r be the radius looked for,

$$r = \sqrt{(\sqrt{R^2 - b^2} - a)^2 + b^2}.$$

If the smaller radius r is given and the larger radius R sought, the formula takes the form

$$R = \sqrt{(\sqrt{r^2 - b^2} + a)^2 + b^2}.$$

Suppose, for an example, that a tool is to be made to form the piece in Fig. 209. Assume that the largest diameter of the tool is to be 3 inches, and that the cutting edge is to be one-quarter inch below the center of the tool. Then the next diameter below 3 inches is found from the formulas given by inserting the given values: $R = 1\frac{1}{2}$ inches, $b = \frac{1}{4}$ inch, and $a = \frac{1}{4}$ inch (half the difference between 4 and $3\frac{1}{2}$ inches; see Fig. 209).

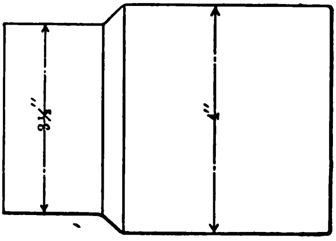

Fig. 209

Then

$$r = \sqrt{(\sqrt{(1\tfrac{1}{2})^2 - (\tfrac{1}{4})^2} - \tfrac{1}{4})^2 + (\tfrac{1}{4})^2} = \sqrt{(\sqrt{\tfrac{35}{16}} - \tfrac{1}{4})^2 + \tfrac{1}{16}}$$

$$= \frac{5.017}{4} = 1.254 \text{ inches.}$$

While the formula looks complicated, by means of a table of squares the calculations are easily simplified and can be carried out in three or four minutes. The value r being 1.254 inches, the diameter to make the smaller step of the forming tool will be 2.508 inches, instead of $2\frac{1}{2}$

inches exact, as would have been the case if the cutting edge had been on the center line.

Sometimes forming tools are made in sections, as shown in Fig. 210, so that all diameters, sides and angles can be easily ground after hardening. This design is of value especially when forming tools are made from high-speed steel, as the finished surfaces and the edges are likely to be impaired by the high heat necessary when hardening high-speed steel.

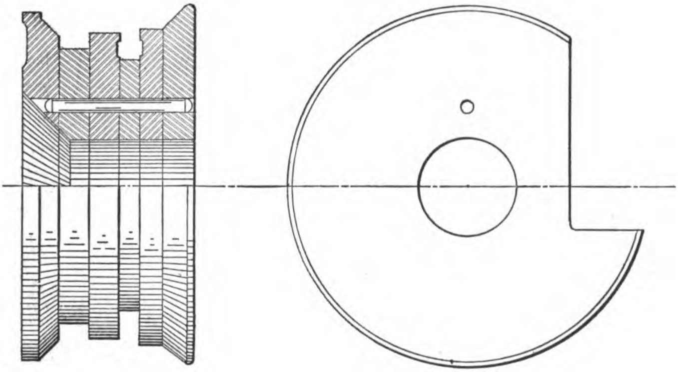

Fig. 210. Forming Tool Made in Sections

Making Concave and Convex Forming Tools in the Milling Machine. — A method for making the concave forming tools used for forming and relieving convex cutters in a milling machine was described by Mr. J. J. Lynskey in *Machinery*, December, 1903. Referring to Fig. 211, *B* represents the tool which is held in the holder *A* at an angle of 75 degrees with the table of the milling machine, this giving a 15-degree angle of clearance to the finished tool. When the tool blank is placed in the holder the top is milled off parallel with the table of the machine. A half circle of the desired radius is then drawn on the back of the tool and a semicircular groove milled nearly

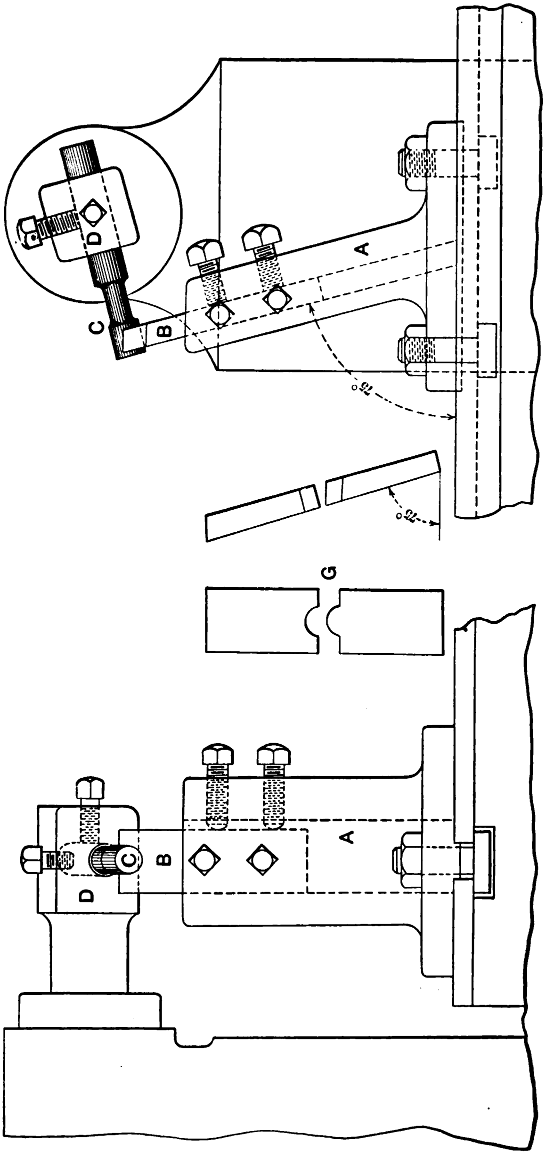

Fig. 211. Making a Concave Forming Tool in the Milling Machine

to the line scribed. For finishing the tool a plug *C* is made, the end of which is hardened and ground. This plug is held in a special holder *D* in the spindle of the milling machine, and set so that the axis of the plug is perpendicular to the face of the tool to be finished. The spindle is then firmly locked, and the table of the machine moved forward and backward by hand until the tool has got the required shape.

By using the concave tool as a planing tool as shown at *G* a convex tool can be formed, but both tools must be held at an angle of 75 degrees to the milling-machine table. Of course, this example is given only to suggest what can be done in a milling machine if a shaper is not at hand. The latter machine is the one used whenever possible.

T-SLOT CUTTERS.

The T-slot cutter has gradually and successfully outclassed the old-style method of planing T slots in milling-machine tables and other machine tool parts where T slots are regularly used. The old method was far more expensive, and the quality of the work obtained was in no way superior. T-slot cutters, therefore, at the present time constitute an important tool in the machine shop, particularly where machine tools are manufactured.

The general appearance of the cutter is shown in Fig. 212. The cutting portion, *A*, is provided with teeth on its face as well as on both sides. A long neck, *B*, permitting the cutter to advance in the narrow portion of the T slot, which is already milled with a side milling cutter before the T-slot cutter is presented, combines the cutting portion with the shank, which latter as a rule is either a Brown and Sharpe or a Morse taper shank.

In making the cutter, after having been turned all over, the teeth on the face are first cut. Then the teeth are cut on the end of the cutter, and finally on the back side at the neck. In order to provide a cutter that will cut more easily than would be the case if all the teeth were full, every other tooth is cut away at the ends as indicated in Fig. 213, but it should be observed that where a tooth is cut off at the end face it is left full at the back face and *vice versa.* Some makers prefer to leave one tooth full at both ends to facilitate measuring the thickness of the cutter.

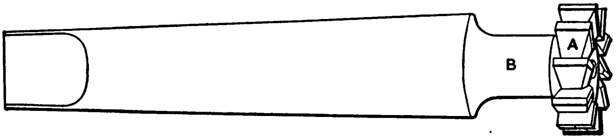

Fig. 212. T-slot Cutter

In order to permit the grinding of T-slot cutters without making the slot cut by them too small, they are originally made one-thirty-second inch larger in diameter and one-sixty-fourth inch greater in thickness than the nominal size.

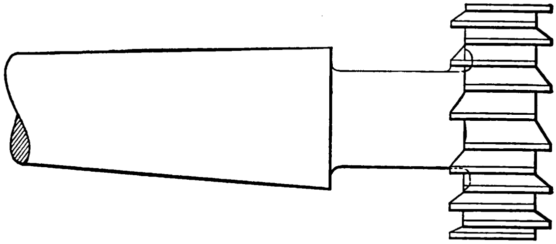

Fig. 213. Teeth of T-slot Cutter Cut Away at Opposite Ends

It is advisable to harden mills of this description the entire length of the necked portion marked *B*, Fig. 212, especially if the neck is of small diameter. Draw the neck to a blue color when tempering, and the cutting portion to a straw color. The teeth of T-slot cutters should be coarse and of a form that insures the greatest strength possible, allowing of course sufficient space between the teeth to accommodate chips.

TABLE C.

DIMENSIONS OF T-SLOTS.

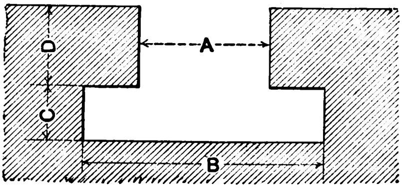

A	*B*	*C*	*D*	*A*	*B*	*C*	*D*
$\frac{1}{4}$	$\frac{1}{2}$	$\frac{5}{32}$	$\frac{5}{16}$	$\frac{5}{8}$	$1\frac{3}{16}$	$\frac{13}{32}$	$\frac{3}{4}$
$\frac{5}{16}$	$\frac{5}{8}$	$\frac{5}{32}$	$\frac{3}{8}$	$\frac{3}{4}$	$1\frac{5}{16}$	$\frac{17}{32}$	1
$\frac{3}{8}$	$\frac{11}{16}$	$\frac{7}{32}$	$\frac{7}{16}$	$\frac{7}{8}$	$1\frac{5}{8}$	$\frac{11}{16}$	$1\frac{1}{16}$
$\frac{7}{16}$	$\frac{13}{16}$	$\frac{7}{32}$	$\frac{7}{16}$	1	$1\frac{7}{8}$	$\frac{13}{16}$	$1\frac{3}{16}$
$\frac{1}{2}$	$\frac{15}{16}$	$\frac{9}{32}$	$\frac{9}{16}$	......	......	......	......

TABLE CI.

SIZE OF SHANKS OF T-SLOT CUTTERS.

Nominal Size of Cutter.	Actual Size of Cutter.	Nominal Thickness of Cutter.	Actual Thickness of Cutter.	No. of Morse Taper Shank.	No. of B. and S. Taper Shank.
$\frac{1}{2}$	$\frac{17}{32}$	$\frac{5}{32}$	$\frac{11}{64}$	1	4, 5
$\frac{5}{8}$	$\frac{21}{32}$	$\frac{5}{32}$	$\frac{11}{64}$	1	5, 7
$\frac{11}{16}$	$\frac{23}{32}$	$\frac{7}{32}$	$\frac{15}{64}$	2	5, 7
$\frac{13}{16}$	$\frac{27}{32}$	$\frac{7}{32}$	$\frac{15}{64}$	2	7, 9
$\frac{15}{16}$	$\frac{31}{32}$	$\frac{9}{32}$	$\frac{19}{64}$	2	7, 9
$1\frac{3}{16}$	$1\frac{7}{32}$	$\frac{13}{32}$	$\frac{27}{64}$	3	9
$1\frac{5}{16}$	$1\frac{11}{32}$	$\frac{17}{32}$	$\frac{35}{64}$	3	9
$1\frac{5}{8}$	$1\frac{21}{32}$	$\frac{11}{16}$	$\frac{45}{64}$	4	9
$1\frac{7}{8}$	$1\frac{29}{32}$	$\frac{13}{16}$	$\frac{53}{64}$	4	9

The dimensions of standard T slots for which these cutters are made are given in Table C. As mentioned, the cutter is originally made one-thirty-second inch larger in diameter and one-sixty-fourth inch greater in thickness than these dimensions. The numbers of Morse and Brown and Sharpe taper shanks with which these cutters are commonly provided are given in Table CI.

METAL SLITTING CUTTERS.

Thin cutters intended for cutting off or slitting purposes are termed metal slitting cutters. The sides of these cutters are ground to run true, and made slightly thicker at the outside edge than at the hole or center, in order to provide for proper clearance and prevent binding in the slot cut. For cutting steel the number of teeth used in these cutters is as follows:

Diameter of Cutter.	Number of Teeth.	Diameter of Cutter.	Number of Teeth.
2½	30	5½	56
3	36	6	60
3½	40	6½	64
4	44	7	68
4½	48	7½	70
5	52	8	72

For brass and very deep slots the pitch of the teeth should be coarser in the proportion of about 2 to 3; that is, if a 4½-inch cutter for steel has 48 teeth, one for brass should have only two-thirds this number, or 32. In case very heavy work is required of a metal slitting cutter the teeth are eccentrically relieved; this permits the teeth to be wider and stronger.

For light slotting, like screw slotting, etc., a cheaper grade of cutters with very fine teeth, and not ground on the sides, is used. These are commonly termed screw slotting cutters. The number of teeth in these for the most common diameters is as follows:

Diameter of Cutter.	Number of Teeth.
1¾	52
2	56
2¼	60
2½	64
2¾	68
3	72

INSERTED-BLADE MILLING CUTTERS.

Large milling cutters, say from 6 to 7 inches in diameter and upward, are usually made with inserted teeth. The advantages gained are decreased cost, because the cutter body may be made of either cast iron or machine steel, and the elimination of loss due to the liability of cracking in hardening. The cutter body is generally made from cast iron and the blades from ordinary tool steel. Whether high-speed steel blades are actually greatly superior to carbon steel blades for these cutters some manufacturers doubt. Many users of milling cutters, however, use high-speed steel cutters, which then should be inserted in machine steel bodies. The latter material is also used for the body of all inserted-blade cutters smaller than 6 inches in diameter, or where the body is less than 1½ inches thick.

The blades are inserted in slots milled in the body either parallel with the axis of the cutter or at an angle thereto. When the cutter is to be used as a plain milling cutter the blades are usually set at an angle. When the cutter is used for side or straddle milling or for end milling the blades are not set at an angle with the axis.

One of the most common methods for holding the blades in the body is the one shown in Fig. 214. This method combines simplicity and cheapness with strength and durability. This method is employed by the Pratt and Whitney Company. Whether set parallel with or at an angle to the axis of the cutter, the method of holding the blades is the same. As seen from the cut, the blades are set into rectangular slots in the body and held in position by means of taper pins which wedge the metal of the body firmly against the sides of the blades. There is only one taper pin for every other blade, the pin spreading the metal equally on each side of a narrow slot *A* located halfway between the slots for the blades. Attention must be called to the fact that the distances between the teeth must be such as to insure on the one hand perfect

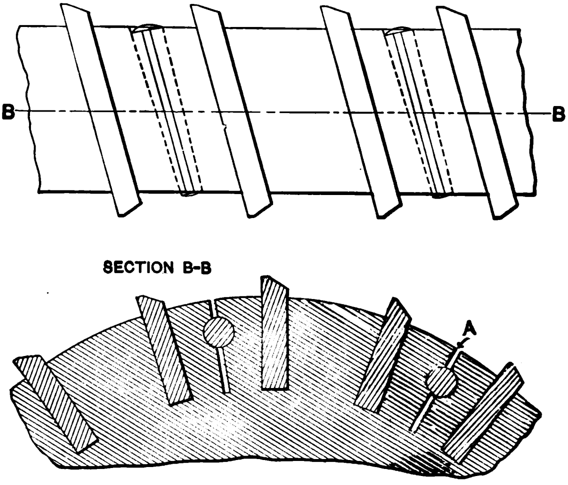

Fig. 214. Method of Securing Blades in Body of Axial Cutter

holding qualities (that is, the metal between the slot *A* and the slots for the blades must not be so heavy as to prevent good springing action when forced sideways by the taper pin), and on the other hand a strong and durable body.

In making these cutters the slots for the blades are first milled. The taper-pin hole between every other pair of teeth is then drilled, and reamed to receive the taper pin. After reaming the holes the narrow slots *A* are cut with a thin metal slitting cutter. When the blades are in position the taper pins are driven into the taper holes, closing up the stock, as mentioned, and holding the cutters securely. When removing the blades, the taper pins are driven out, and the stock springing back into its normal position leaves the cutter free. The blades are, of course, turned and ground in position in the body. They are backed off so that the backed-off surface makes an angle of from 75 to 80 degrees with the front of the blade. The angle which the slots into which the blades are inserted should make with the center line when not milled parallel with the axis should be between 12 and 15 degrees.

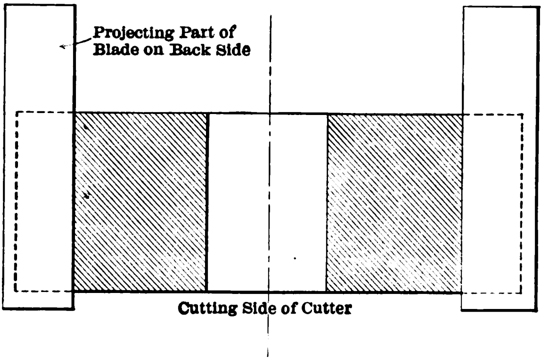

Fig. 215. Section of Inserted Blade End Milling Cutter

In cutters for end milling, the blades should project a considerable amount on the back side, as shown in Fig. 215, in order to allow for adjustment when the cutting faces of the blades by frequent grinding have been worn down near to the body of the cutter.

Simple Method of Holding Blades. — One very simple method of fastening the inserted blades to the body is shown in Fig. 216. This form has been long in use in the Armstrong Manufacturing Company's shops. While not the very best construction, for narrow inserted-blade cutters it will prove satisfactory, particularly because of being a comparatively inexpensive method of fastening. The body is slotted as usual, the blades *C* are provided with a shoulder, and against this shoulder bears the head of screw *B*. In order to prevent side slip, the inner end of the blade is notched so as to engage with the body as shown in the sectional view, Fig. 216. This class of cutter does not recommend itself for end milling, because the blades are hardly held securely enough for heavy strains from the sides or ends.

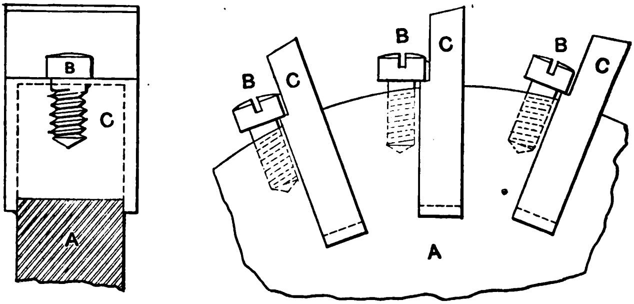

Fig. 216. Simple Method of Securing Blades in Inserted Blade Cutter

Fig. 217 shows an English method of securing the teeth of inserted-blade milling cutters to the body. This arrangement is the joint patent of H. S. Moorwood of Onslow House, Brocco Bank, Sheffield, and J. M. Moorwood of Millhouses Lane, Millhouses, Sheffield, England. The body *A* of the cutter is provided with slots *B* to receive the cutter blades as usual, but the lower ends of the cutter blades, as well as the portions of the body between the blades, are grooved to receive the annular projection *D* of two disks *E* which are screwed tightly to the body, thus holding the blades in place. The groove in the blades as well as the annular projection on the side plates is slightly tapered on the inside, so that the inserted blades are drawn inward and held firmly against the bottom of the slots for the blades in the body when the bolts are tightened. While, without modification, this method may have its difficulties, and may be rather expensive, the idea involved is commendable, and may serve to suggest something of better practical application.

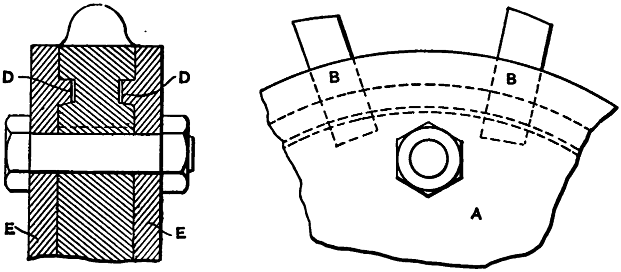

Fig. 217. English Method of Securing Blades in Milling Cutter

INSERTED-TOOTH FORMED MILLING CUTTER.

Fig. 218 shows an inserted-tooth milling cutter, designed to manufacture the brake shoes shown at *A*, in which it is necessary to keep both the form and the radius of the cut to gauge. This cutter was shown in *Machinery,* January, 1908, by Mr. S. A. McDonald. The principle of the inserted teeth is the same as that of the circular forming tools used on screw machines, the teeth being sharpened radially. The taper studs are used to secure the teeth in place by forcing the slots open and binding the body of the cutter on the teeth. The cutter-holding body is grooved in the center to reduce the body of metal to be sprung out in order to bind on the outer edges of the teeth or cutters. As the teeth become dull they can be ground while in place a few times before being loosened and again set radially. The advantage of this form cutter is that the teeth can be ground to shape after being hardened (because they are circular), which is impossible with the ordinary form cutter, but often very necessary when the pieces milled have to be correct within small limits. This permits the use of Novo or other high-speed steel, which ordinarily cannot be used

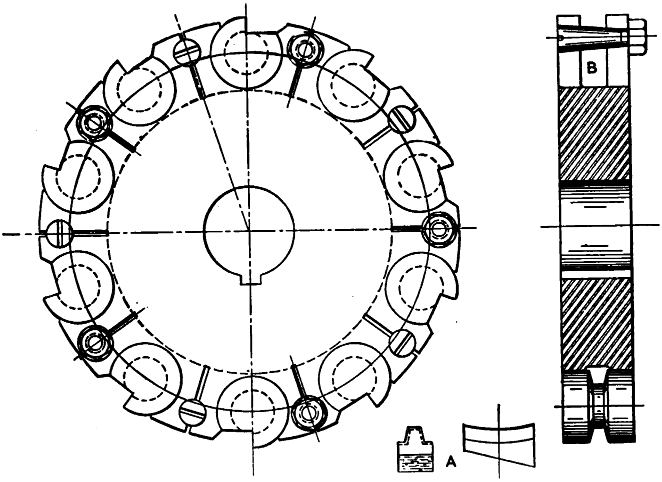

Fig. 218. Inserted-Tooth Formed Milling Cutter

for form cutters, as the outside is burned in hardening. Broken teeth can be easily replaced. No backing-off machine, or fixture, is needed for making the formed teeth, which will appeal to small shops. The cost of material is considerably reduced as compared with a solid form cutter. Within its limits different kinds of teeth can be used in the same body, but this is only recommended when the removed cutters are of no further use.

One weak point in this design of cutter seems to be the cutting of the central groove *B*, which naturally permits the outer edges of the cutter body to bend inward when the nut on the tapered pins is tightened for binding the blades. Another objection is the projection of the nuts outside of the cutter body, as it is never good practice to have projections of this kind on rotating bodies if it can be avoided. These objections, however, are mere details, and can easily be overcome. The principle of the cutter itself is very commendable, and may also be of value as suggestive of similar adaptations for a multiplicity of work.

DIMENSIONS OF INSERTED-BLADE MILLING CUTTERS.

Definite dimensions for the various quantities in inserted-blade milling cutters are difficult to give, as opinions differ considerably. Each type, of course, would require a different set of dimensions. Table CII gives dimensions for guidance in laying out cutters of the type shown in Fig. 214.

SPECIAL FORM OF MILLING CUTTERS.

The Hess Machine Company, Philadelphia, Pa., in 1903 brought out a new form of milling cutter working on a different principle from the ordinary cutter.

TABLE CII.

DIMENSIONS OF INSERTED-BLADE MILLING CUTTERS.

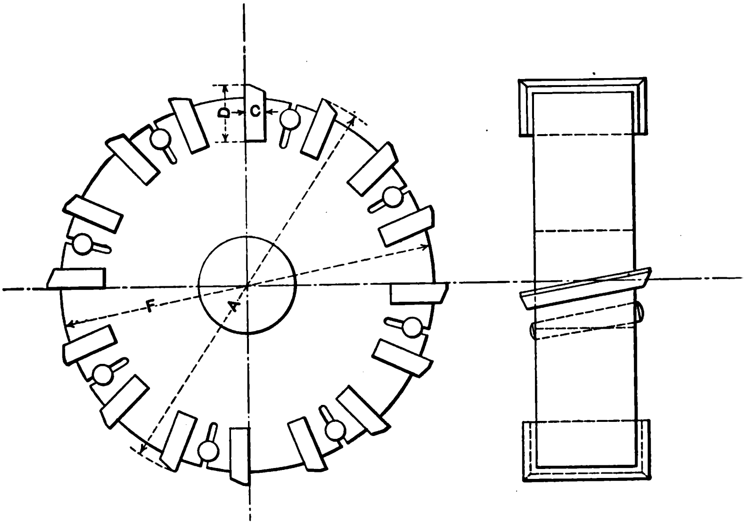

Fig. 219

Diameter of cutter	A	3	4	5	6	7	8	9	10	11	12
Number of blades	B	8	10	10	12	14	16	16	18	20	20
Thickness of blades	C	$\frac{1}{4}$	$\frac{1}{4}$	$\frac{5}{16}$	$\frac{5}{16}$	$\frac{5}{16}$	$\frac{5}{16}$	$\frac{3}{8}$	$\frac{3}{8}$	$\frac{3}{8}$	$\frac{7}{16}$
Width of blades	D	$\frac{3}{4}$	$\frac{13}{16}$	1	$1\frac{1}{8}$	$1\frac{1}{8}$	$1\frac{1}{8}$	$1\frac{1}{4}$	$1\frac{1}{4}$	$1\frac{1}{4}$	$1\frac{3}{8}$
Size of standard taper pin	E	4	4	5	5	5	5	6	6	6	6
Diameter of cutter body	F	$2\frac{1}{2}$	$3\frac{1}{2}$	$4\frac{3}{8}$	$5\frac{3}{8}$	$6\frac{3}{8}$	$7\frac{3}{8}$	$8\frac{1}{4}$	$9\frac{1}{4}$	$10\frac{1}{4}$	$11\frac{1}{4}$

The action of the ordinary milling cutter produces chips that are comparatively wide and thin. Each successive tooth removes a chip having a length equal to the full width of the cut. The feed per revolution of the cutter is divided into as many chips as there are teeth in the cutter. While it is true that if the teeth are nicked the continuity of the chip is broken, still the action is substantially the same. Cutting the teeth on a spiral, although it makes the turning moment uniform and preserves a constant thrust in one direction, which means a more even cut, does not change the principle of the cutting action.

In order to avoid the consequent heavy thrust at right angles to the work the Hess milling cutter removes the metal in a series of narrow chips, the cut of each tooth being narrow and deep, similar to that of a planer roughing tool. The cutter is not mounted on a keyed mandrel, but instead the outer end of the cutter body is formed into a journal, supported in an outboard bearing, and the other end carries a plug fitting into the spindle. The end of the spindle of the milling machine is provided with a flange, and a corresponding flange is provided on the cutter body, these flanges being united by bolts. Fig. 220 shows a cutter made on this principle. The teeth are made of high-speed steel, working successfully at a cutting speed of 60 feet per minute. They are cast or fused into the cast-iron body by being placed in the mold and the metal poured around them.

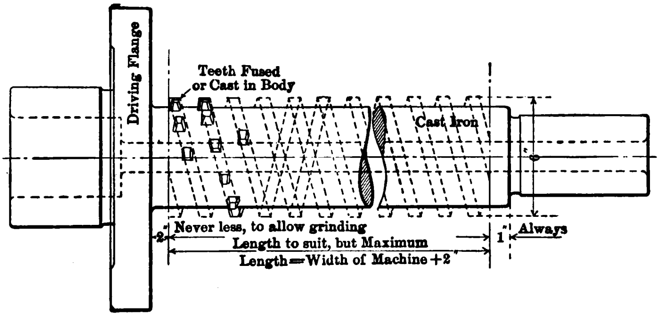

Fig. 220. Hess Machine Company's New Type Milling Cutter

The teeth are arranged in a double right-hand helix having a lead of 3 inches. Since there are two rows or threads of teeth there are only two teeth in the same transverse plane, and each tooth takes a cut whose thickness in the direction of feed is one-half the feed per revolution of the cutter.

Since the paths of adjacent teeth overlap it gives each following tooth a finishing action so far as its overlapping portion is concerned. The thickness of the chip taken by the overlapping part of a tooth is thin as compared with the principal chip. The cutting action is very similar to that of a gang planer tool, each tooth having more of a side-cutting than an end-cutting action. Consequently the thrust at right angles to the work is proportionately reduced.

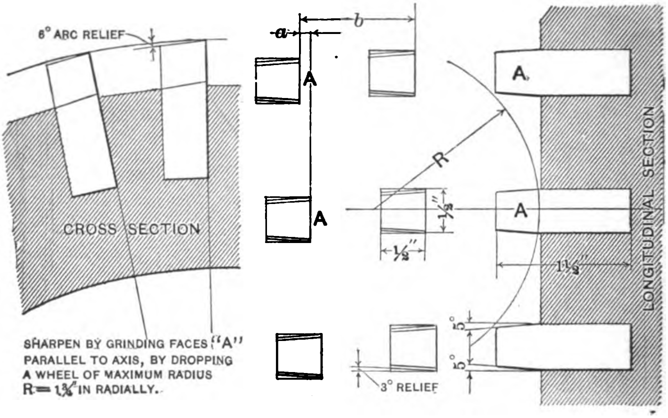

Fig. 221. Teeth of Cutter in Fig. 220 shown in half Actual Size

The teeth reduced to one-half actual size are shown in Fig. 221. Here are also shown the angle of relief and clearance.

CHAPTER X.

REAMERS.

INTRODUCTORY.

REAMERS, in the narrowest sense of the word, include only tools intended for producing a hole that is smooth and true to size. In a wider sense, however, the word is applied to any solid circular tool with a number of cutting edges, used for enlarging cored or drilled holes, little or no account being taken of whether the resulting hole is strictly true to size or not. With reference to the manner in which reamers are made, we may distinguish between solid and inserted-blade reamers. The latter are usually adjustable for size. With reference to the purpose of reamers and the manner in which they are used, we distinguish mainly between hand reamers, chucking reamers, shell reamers, and taper reamers. The latter class of reamers is mostly, perhaps, used by hand, the same as the hand reamer, but the hand reamer is considered to mean only a straight reamer, and the taper reamer forms a class by itself. On the boundary between reamers and drills is the grooved chucking reamer, which is used for roughing cored holes, and is fluted with spiral grooves like a twist drill. Center reamers constitute a special class of reamers, which are used for reaming the centers in pieces to be held between the centers in the lathe.

HAND REAMERS.

The ordinary hand reamer, provided with guide, is shown in Fig. 222. As seen from the cut, it consists of a cutting portion, a shank, and a square by which it is turned when in use. As is also shown, the end portion of the shank on which the square is formed is turned down below the diameter of the shank proper. The purpose of this is to prevent any burrs that may be raised on the edges of the square by the wrench by which the reamer is turned from projecting outside of the diameter of the shank, thus either preventing the reamer from being drawn clear through the hole reamed or causing scratches in the hole if the reamer be pulled through. Between the cutting portion and the shank there is a short neck, the purpose of which is, primarily, to provide for clearance for the grinding wheel when grinding the cutting edges as well as the shank of the reamer, and also to permit the cutter by which the flutes are cut to clear the shank so as to give a more finished appearance to the tool.

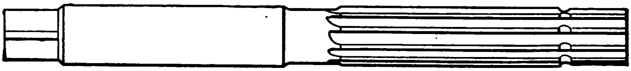

Fig. 222. Regular Hand Reamer

Requirements Placed on a Hand Reamer.—Hand reamers are probably among the most difficult and particular tools to make and manufacture. In many reamers manufactured by firms considered to be leaders in the making of small tools no regard or attention seems to have been given to some of the most essential points in the making of these tools. As of course everybody knows, it is absolutely necessary when making a *good* hand reamer to take into consideration that the reamer is expected to produce (1) a smooth hole, (2) a straight hole, and (3) a round hole.

If we now consider first what means are generally used for making reamers that will produce a smooth hole, we will find that three ways have been tried with more or less success. The first and earliest method used to prevent chattering was making an odd number of flutes in the reamers, but this has been almost entirely discarded on account of the difficulty in measuring the diameter of such reamers, it being possible to gauge this diameter only with ring gauges. At present some manufacturers, in order to overcome the vibrations which mar the smoothness of the hole, make their reamers with spiral flutes. This, although partly overcoming the difficulty referred to, has several serious disadvantages. In the first place, such a reamer is more difficult and more expensive to flute, not to mention the difficulty of giving such a reamer the proper relief. In the second place, a reamer fluted in such a way has the disadvantage of either working forward or resisting, depending on whether right-hand or left-hand spiral flutes have been given to the reamer in question. It may be noted that it is preferable to make regular right-hand reamers of this description with left-hand spiral flutes, which will prevent the reamer from working forward. Some one might think that the working forward of the reamer (to a certain extent depending upon the amount of spiral given to the flutes) would rather be an advantage, and so it would provided that the forward motion could be on the one hand perfectly uniform and on the other hand small enough to advance the reamer a very limited distance for each revolution. This result, however, can be obtained in a very much simpler and cheaper way by using straight flutes and threading the reamer on the point for a short distance. The advance of the reamer in this case will of course be governed by the pitch of the thread. The outside diameter of the threaded portion must obviously be slightly smaller than the diameter of the reamer itself.

Returning to our original consideration in regard to the means employed to prevent vibration, the third way used is to "break up the flutes," which means that the cutting edges are not equally spaced, although the reamer then is given an even number of flutes. This ununiformity in spacing need not be greater than to permit a gauging of the diameter of the reamer over two opposite cutting edges that will be correct for all practical purposes. The "breaking up of the flutes" is the simplest and most effective way to obtain the result wanted, viz., a smooth hole. Leading manufacturers are commencing more and more to manufacture their reamers in this manner.

The second consideration which was mentioned above as necessary in a good reamer is its capability of producing a straight hole. This is the principal point referred to in the beginning of this chapter which seems to have been wholly disregarded by manufacturers of reamers. No reamer will produce a straight hole unless it is properly started, and no reamer will start properly unless it is properly guided. It is obvious that even with the most extreme care, and handled by the most experienced man, a reamer without a guide will make the hole slightly tapered, and too large at the end where the reamer first enters the work.

The way hand reamers are generally made for the market is to simply taper the point for a certain distance up, leaving nothing to steady or guide whatsoever. This is not right. Instead a fluted cylindrical portion of the end of the reamer should be left without relief, and this part should be as much less in diameter than the reamer itself as is practical for various metals to be cut with the reamer. As this amount is very small and is left entirely to the judgment of the manufacturer, the practice of making reamers with guides slightly smaller than the diameter of the reamer would prevent the user from misusing and abusing the tool, as he cannot use it to remove a greater amount of metal than the reamer is intended for, because the guide will not enter a hole that is not roughed out sufficiently large before hand reaming. When using a reamer with a tapered point it is usually possible to enter and start the reamer in holes so much smaller than the finished size as to seriously injure and even spoil it by trying to make it perform a duty for which it was not intended, this being possible because the taper is made so large by most manufacturers as to permit it.

The third consideration, previously referred to, and essential in a good reamer, is its capability of producing a round hole. Most of the reasons set forth in treating the possibilities of getting a smooth and a straight hole apply here also, and it may well be repeated that unevenly spaced (broken up) cutting edges and a guide nicely fitting the hole to be reamed are the most essential requisites for obtaining the desired results.

RELIEF.

It will also be necessary to remark that giving too much or too little relief to a reamer will tend to produce unsatisfactory results. Too much relief invariably causes a reamer to chatter. Too small relief, again, will wear the reamer more, as the shavings get in between the cutting edges and the work to be reamed and slowly grind away the land; besides, there is a tendency to bind the reamer in the hole, and as a consequence to injure the hole as well as the reamer, and cause the expenditure of more exertion in performing the reaming operation.

In this connection it may be mentioned that the flat relief, although mostly used, is not the most desirable nor the ideal one, because the cutting edge is not properly supported. The best results are obtained by a relief as shown in Fig. 223. The difference between this relief and the flat is very obvious from the cut, where the latter relief is shown in dotted lines. This special relief, usually termed the eccentric relief, is used by only two prominent tool manufacturers, but it is to be strongly recommended because it adds greatly to the reamer's capability of producing a smooth hole. The relief is produced by placing the reamer in a grinding machine, as usual, but not on centers in line with the spindle but on auxiliary centers, provided with adjustment sideways, so as to enable them to be set at different positions for different relief wanted on different sizes and kinds of reamers. The reamer is thus held eccentrically. A rocking motion is then imparted to the spindles holding the auxiliary centers, and in this manner the grinding wheel, traveling back and forth along the reamer, produces an eccentric relief.

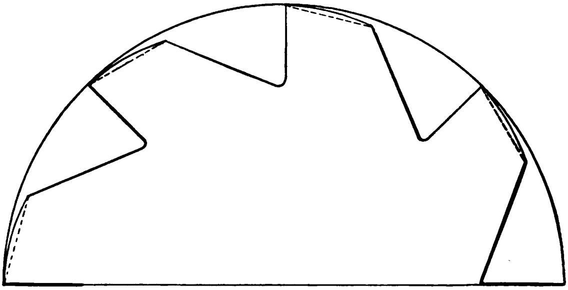

Fig. 223. Comparison between Eccentric and Flat Relief

This eccentric relief, however, is not in favor with all users of reamers. The eccentrically relieved reamer is purely a finishing reamer, and cannot with advantage be used to remove any considerable amount of metal, because it has practically a negative rake. When hand reamers are used merely for the purpose of removing stock, or in other words, simply for enlarging holes, the flat relief will undoubtedly prove to be superior to the eccentric. The primary use of straight hand reamers, however, is for producing holes true to size and smoothly finished, removing meanwhile but a small amount of stock. For this purpose nothing excels the eccentric relief. That there is a distinct difference between the relief required, according to the use to be made of the reamer, is best proved by the fact that, while some manufacturers of tools always relieve their reamers eccentrically, intending them to be used as finishing reamers, some of their customers, after receiving the reamers, place them in a grinding machine and replace the eccentric relief with a flat one, because they find this relief better for their purpose, viz., simply enlarging holes, irrespective of the requirements of accuracy and smoothness.

Reamers with Helical Flutes.

Although the advantages of helical or, as they are commonly called, spiral cutting edges are somewhat doubtful for straight reamers for ordinary use, they are recommended for work where the hole reamed is pierced crosswise by openings. A right-handed reamer should have left-hand spiral flutes, in order to prevent the tool from drawing into the work. The angle of spiral should be such that the cutting edges will make an angle of 15 degrees with a plane passed through the axis of the reamer. The number of flutes may be the same as if the reamer were provided with straight cutting edges, and the same kind of fluting cutters are employed.

THREADED-END HAND REAMERS.

As has already been mentioned, hand reamers are sometimes provided with a thread at the extreme point in order to give them a uniform feed when performing the reaming operation. The diameter on the top of this thread at the point of the reamer is considerably smaller than the reamer itself, and the thread tapers upward until it reaches a dimension of from 0.003 to 0.008 inch, according to size, below the size of the reamer; at this point the thread stops, and a short neck, about one-sixteenth inch wide, separates the threaded portion from the actual reamer, which is provided with a short taper from three-sixteenths to seven-sixteenths inch long, according to size, up to where the standard diameter is reached. In fact, the reamer has the appearance of the regular reamer in Fig. 222, excepting that the guide is threaded and tapered.

The length of the threaded portion and the number of threads per inch with which to provide the point are given below.

Size of Reamer.	Length of Threaded Portion.	Number of Threads per Inch.
From $\frac{1}{8}$ to $\frac{5}{16}$ inch	$\frac{3}{8}$	32
From $\frac{11}{32}$ to $\frac{1}{2}$ inch	$\frac{7}{16}$	28
From $\frac{17}{32}$ to $\frac{3}{4}$ inch	$\frac{1}{2}$	24
From $\frac{25}{32}$ upward	$\frac{9}{16}$	18

The kind of thread employed is the sharp V thread, as this thread gets a better grip on the metal, and thus feeds the reamer in a more certain manner.

The diameter measured over the top of the thread at the end of the point of the reamer should be as follows.

Size of Reamer.	Diameter of Thread at Point of Reamer.
From $\frac{1}{8}$ to $\frac{1}{2}$ inch	Standard size—0.006 inch
From $\frac{17}{32}$ to 1 inch	Standard size—0.008 inch
From $1\frac{1}{32}$ to $1\frac{1}{2}$ inches	Standard size—0.010 inch
From $1\frac{17}{32}$ to 2 inches	Standard size—0.012 inch
From $2\frac{1}{32}$ to $2\frac{1}{2}$ inches	Standard size—0.015 inch
From $2\frac{17}{32}$ to 3 inches	Standard size—0.020 inch

Breaking up of the Flutes. — As has been previously mentioned, the best way to obtain a good hand reamer is to have the cutting edges irregularly spaced. This difference in spacing may in fact be made very slight. The manner in which it is usually done is to move the index head, in which the reamer is fixed, a certain amount more or less than would be the case if the spacing were regular.

In Table CIII a chart is presented which will serve as a guide in fluting reamers with irregular spacing. This chart gives the amount that the index head should be moved more or less than would be the case for even spacing. The figures designate the number of holes to move in a certain index plate used in each special case. It is, of course, understood that this table is given only as an example of how tables of this kind may be worked out, as there evidently is an unlimited number of variations.

Dimensions. — In Table CIV the principal dimensions for hand reamers are given. These dimensions are figured from the formulas which are given below. No figures are given in the table for the diameter of the shank, as on any size reamer the general rule to make the shank very slightly below (0.001 to 0.002 inch) the diameter of the reamer may be adopted. The part of the shank which is squared should

TABLE CIII.

IRREGULAR SPACING OF FLUTES IN REAMERS.

Number of flutes in reamer	4	6	8	10	12	14	16
Index circle to use	41	39	47	47	39	49	20
Before cutting	move spindle the number of holes below more or less than for regular spacing.						
2d flute	8 less	4 less	3 less	2 less	4 less	3 less	2 less
3d flute	4 more	5 more	5 more	3 more	4 more	2 more	2 more
4th flute	6 less	7 less	2 less	5 less	1 less	2 less	1 less
5th flute		6 more	4 more	2 more	3 more	3 more	2 more
6th flute		5 less	6 less	2 less	4 less	1 less	2 less
7th flute			2 more	3 more	4 more	3 more	1 more
8th flute			3 less	2 less	3 less	2 less	2 less
9th flute				5 more	2 more	1 more	2 more
10th flute				1 less	2 less	3 less	2 less
11th flute					3 more	3 more	1 more
12th flute					4 less	2 less	2 less
13th flute						2 more	2 more
14th flute						3 less	1 less
15th flute							2 more
16th flute							2 less

be turned enough smaller in diameter than the shank itself so that when applying a wrench no burr may result which eventually would interfere with the reamed hole if the reamer were passed clear through.

Figures for the diameter of the guide will not be found in the table, as here no definite rule can be given. For different metals it is obvious that different amounts should be left for the reamer to remove. As a guidance for all-around work it may be said that the guide should be made from 0.005 to 0.010 inch smaller than the standard size of the reamer for diameters up to 1 inch, and from 0.010 to 0.015 inch smaller for diameters from 1 to 3 inches. At the upper end of the guide there is a tapered portion (shown exaggerated in Fig. 224) extending from about three-eighths to five-eighths inch for the smaller and from three-quarters to 1¼ inches for the larger sizes mentioned.

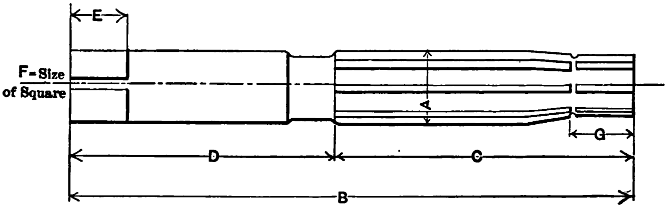

Fig. 224

In all the formulas the diameter of the reamer is considered as the fundamental factor. In the formulas

A = the diameter of the reamer,
B = the total length,
C = the length of the flute,
D = the length of the shank,
E = the length of the square,
F = the size of the square,
G = the length of the guide.

TABLE CIV.

PROPORTIONS OF HAND REAMERS.

(See Fig. 224.)

Diameter.	Total Length.	Length of Flute.	Length of Shank.	Length of Squared Part.	Size of Square.	Length of Guide.
A	*B*	*C*	*D*	*E*	*F*	*G*
$\frac{1}{16}$	$2\frac{3}{16}$	$\frac{7}{8}$	$1\frac{5}{16}$	$\frac{7}{32}$	$\frac{3}{64}$	$\frac{3}{16}$
$\frac{1}{8}$	$2\frac{5}{8}$	$1\frac{1}{8}$	$1\frac{1}{2}$	$\frac{1}{4}$	$\frac{3}{32}$	$\frac{7}{32}$
$\frac{3}{16}$	$3\frac{1}{16}$	$1\frac{3}{8}$	$1\frac{11}{16}$	$\frac{9}{32}$	$\frac{9}{64}$	$\frac{1}{4}$
$\frac{1}{4}$	$3\frac{1}{2}$	$1\frac{5}{8}$	$1\frac{7}{8}$	$\frac{5}{16}$	$\frac{3}{16}$	$\frac{5}{16}$
$\frac{5}{16}$	$3\frac{15}{16}$	$1\frac{7}{8}$	$2\frac{1}{16}$	$\frac{11}{32}$	$\frac{15}{64}$	$\frac{3}{8}$
$\frac{3}{8}$	$4\frac{3}{8}$	$2\frac{1}{8}$	$2\frac{1}{4}$	$\frac{3}{8}$	$\frac{9}{32}$	$\frac{13}{32}$
$\frac{7}{16}$	$4\frac{13}{16}$	$2\frac{3}{8}$	$2\frac{7}{16}$	$\frac{13}{32}$	$\frac{21}{64}$	$\frac{7}{16}$
$\frac{1}{2}$	$5\frac{1}{4}$	$2\frac{5}{8}$	$2\frac{5}{8}$	$\frac{7}{16}$	$\frac{3}{8}$	$\frac{1}{2}$
$\frac{9}{16}$	$5\frac{11}{16}$	$2\frac{7}{8}$	$2\frac{13}{16}$	$\frac{15}{32}$	$\frac{27}{64}$	$\frac{9}{16}$
$\frac{5}{8}$	$6\frac{1}{8}$	$3\frac{1}{8}$	3	$\frac{1}{2}$	$\frac{15}{32}$	$\frac{19}{32}$
$\frac{11}{16}$	$6\frac{9}{16}$	$3\frac{3}{8}$	$3\frac{3}{16}$	$\frac{17}{32}$	$\frac{33}{64}$	$\frac{5}{8}$
$\frac{3}{4}$	7	$3\frac{5}{8}$	$3\frac{3}{8}$	$\frac{9}{16}$	$\frac{9}{16}$	$\frac{11}{16}$
$\frac{13}{16}$	$7\frac{7}{16}$	$3\frac{7}{8}$	$3\frac{9}{16}$	$\frac{19}{32}$	$\frac{39}{64}$	$\frac{3}{4}$
$\frac{7}{8}$	$7\frac{7}{8}$	$4\frac{1}{8}$	$3\frac{3}{4}$	$\frac{5}{8}$	$\frac{21}{32}$	$\frac{25}{32}$
$\frac{15}{16}$	$8\frac{5}{16}$	$4\frac{3}{8}$	$3\frac{15}{16}$	$\frac{21}{32}$	$\frac{45}{64}$	$\frac{13}{16}$
1	$8\frac{3}{4}$	$4\frac{5}{8}$	$4\frac{1}{8}$	$\frac{11}{16}$	$\frac{3}{4}$	$\frac{7}{8}$
$1\frac{1}{16}$	$9\frac{3}{16}$	$4\frac{7}{8}$	$4\frac{5}{16}$	$\frac{23}{32}$	$\frac{51}{64}$	$\frac{29}{32}$
$1\frac{1}{8}$	$9\frac{3}{8}$	$4\frac{15}{16}$	$4\frac{7}{16}$	$\frac{3}{4}$	$\frac{27}{32}$	$\frac{15}{16}$
$1\frac{3}{16}$	$9\frac{9}{16}$	$5\frac{1}{16}$	$4\frac{1}{2}$	$\frac{25}{32}$	$\frac{57}{64}$	$\frac{81}{32}$
$1\frac{1}{4}$	$9\frac{3}{4}$	$5\frac{3}{16}$	$4\frac{9}{16}$	$\frac{13}{16}$	$\frac{15}{16}$	1
$1\frac{5}{16}$	$9\frac{15}{16}$	$5\frac{5}{16}$	$4\frac{5}{8}$	$\frac{27}{32}$	$\frac{63}{64}$	$1\frac{1}{32}$
$1\frac{3}{8}$	$10\frac{1}{8}$	$5\frac{3}{8}$	$4\frac{3}{4}$	$\frac{7}{8}$	$1\frac{1}{32}$	$1\frac{1}{16}$
$1\frac{7}{16}$	$10\frac{5}{16}$	$5\frac{1}{2}$	$4\frac{13}{16}$	$\frac{29}{32}$	$1\frac{5}{64}$	$1\frac{3}{32}$
$1\frac{1}{2}$	$10\frac{1}{2}$	$5\frac{5}{8}$	$4\frac{7}{8}$	$\frac{15}{16}$	$1\frac{1}{8}$	$1\frac{1}{8}$
$1\frac{9}{16}$	$10\frac{11}{16}$	$5\frac{3}{4}$	$4\frac{15}{16}$	$\frac{81}{32}$	$1\frac{11}{64}$	$1\frac{5}{32}$
$1\frac{5}{8}$	$10\frac{7}{8}$	$5\frac{13}{16}$	$5\frac{1}{16}$	1	$1\frac{7}{32}$	$1\frac{3}{16}$
$1\frac{11}{16}$	$11\frac{1}{16}$	$5\frac{15}{16}$	$5\frac{1}{8}$	$1\frac{1}{32}$	$1\frac{17}{64}$	$1\frac{7}{32}$
$1\frac{3}{4}$	$11\frac{1}{4}$	$6\frac{1}{16}$	$5\frac{3}{16}$	$1\frac{1}{16}$	$1\frac{5}{16}$	$1\frac{1}{4}$
$1\frac{13}{16}$	$11\frac{7}{16}$	$6\frac{3}{16}$	$5\frac{1}{4}$	$1\frac{3}{32}$	$1\frac{23}{64}$	$1\frac{9}{32}$
$1\frac{7}{8}$	$11\frac{5}{8}$	$6\frac{1}{4}$	$5\frac{3}{8}$	$1\frac{1}{8}$	$1\frac{13}{32}$	$1\frac{5}{16}$
$1\frac{15}{16}$	$11\frac{13}{16}$	$6\frac{3}{8}$	$5\frac{7}{16}$	$1\frac{5}{32}$	$1\frac{29}{64}$	$1\frac{11}{32}$
2	12	$6\frac{1}{2}$	$5\frac{1}{2}$	$1\frac{3}{16}$	$1\frac{1}{2}$	$1\frac{3}{8}$
$2\frac{1}{16}$	$12\frac{3}{16}$	$6\frac{5}{8}$	$5\frac{9}{16}$	$1\frac{7}{32}$	$1\frac{35}{64}$	$1\frac{13}{32}$
$2\frac{1}{8}$	$12\frac{3}{8}$	$6\frac{11}{16}$	$5\frac{11}{16}$	$1\frac{1}{4}$	$1\frac{19}{32}$	$1\frac{7}{16}$
$2\frac{3}{16}$	$12\frac{9}{16}$	$6\frac{13}{16}$	$5\frac{3}{4}$	$1\frac{9}{32}$	$1\frac{41}{64}$	$1\frac{15}{32}$
$2\frac{1}{4}$	$12\frac{3}{4}$	$6\frac{15}{16}$	$5\frac{13}{16}$	$1\frac{5}{16}$	$1\frac{11}{16}$	$1\frac{1}{2}$
$2\frac{5}{16}$	$12\frac{15}{16}$	$7\frac{1}{16}$	$5\frac{7}{8}$	$1\frac{11}{32}$	$1\frac{47}{64}$	$1\frac{17}{32}$
$2\frac{3}{8}$	$13\frac{1}{8}$	$7\frac{1}{8}$	6	$1\frac{3}{8}$	$1\frac{25}{32}$	$1\frac{9}{16}$
$2\frac{7}{16}$	$13\frac{5}{16}$	$7\frac{1}{4}$	$6\frac{1}{16}$	$1\frac{13}{32}$	$1\frac{53}{64}$	$1\frac{19}{32}$
$2\frac{1}{2}$	$13\frac{1}{2}$	$7\frac{3}{8}$	$6\frac{1}{8}$	$1\frac{7}{16}$	$1\frac{7}{8}$	$1\frac{5}{8}$
$2\frac{9}{16}$	$13\frac{11}{16}$	$7\frac{1}{2}$	$6\frac{3}{16}$	$1\frac{15}{32}$	$1\frac{59}{64}$	$1\frac{21}{32}$
$2\frac{5}{8}$	$13\frac{7}{8}$	$7\frac{9}{16}$	$6\frac{5}{16}$	$1\frac{1}{2}$	$1\frac{31}{32}$	$1\frac{11}{16}$
$2\frac{11}{16}$	$14\frac{1}{16}$	$7\frac{11}{16}$	$6\frac{3}{8}$	$1\frac{17}{32}$	$2\frac{1}{64}$	$1\frac{23}{32}$
$2\frac{3}{4}$	$14\frac{1}{4}$	$7\frac{13}{16}$	$6\frac{7}{16}$	$1\frac{9}{16}$	$2\frac{1}{16}$	$1\frac{3}{4}$
$2\frac{13}{16}$	$14\frac{7}{16}$	$7\frac{15}{16}$	$6\frac{1}{2}$	$1\frac{19}{32}$	$2\frac{7}{64}$	$1\frac{25}{32}$
$2\frac{7}{8}$	$14\frac{5}{8}$	8	$6\frac{5}{8}$	$1\frac{5}{8}$	$2\frac{5}{32}$	$1\frac{13}{16}$
$2\frac{15}{16}$	$14\frac{13}{16}$	$8\frac{1}{8}$	$6\frac{11}{16}$	$1\frac{21}{32}$	$2\frac{13}{64}$	$1\frac{27}{32}$
3	15	$8\frac{1}{4}$	$6\frac{3}{4}$	$1\frac{11}{16}$	$2\frac{1}{4}$	$1\frac{7}{8}$

For reamers from one-sixteenth to 1 inch diameter the following formulas are used:

$$B = \frac{7\,(4A + 1)}{4}, \qquad E = \frac{A}{2} + \frac{3}{16},$$

$$C = 4A + \tfrac{5}{8}, \qquad F = \frac{3A}{4},$$

$$D = 3A + 1\tfrac{1}{8}, \qquad G = \frac{6A + 1}{8}.$$

For reamers from $1\frac{1}{16}$ inches to 3 inches the following formulas are used:

$$B = 3A + 6, \qquad E = \frac{A}{2} + \frac{3}{16},$$

$$C = \frac{7A + 12}{4}, \qquad F = \frac{3A}{4},$$

$$D = \frac{5A + 12}{4}, \qquad G = \frac{4A + 3}{8}.$$

In Table CIV some dimensions are given in even sixteenths when the formulas give uneven values.

Number of Flutes. — The following table gives the number of flutes with which hand reamers should be provided. It will be noticed that even the smallest sizes are provided with six flutes. It is not considered good practice to make hand reamers with a smaller number of flutes if good results are expected from the use of the tool.

Size of Reamer.	Number of Flutes.
From $\frac{1}{8}$ to $\frac{1}{2}$ inch	6
From $\frac{17}{32}$ to $1\frac{1}{4}$ inches	8
From $1\frac{9}{32}$ to $1\frac{3}{4}$ inches	10
From $1\frac{25}{32}$ to $2\frac{1}{4}$ inches	12
From $2\frac{9}{32}$ to $2\frac{3}{4}$ inches	14
From $2\frac{25}{32}$ to 3 inches	16

From this table it will be seen that the pitch of the teeth, or the distance from cutting edge to cutting edge around the circumference of the reamer, increases from about one-eighth inch for a one-quarter-inch reamer to about nine-sixteenths for a three-inch reamer. The pitch of the cutting edges for a one-inch reamer is about three-eighths inch and for a two-inch reamer slightly more than one-half inch.

Fluting Cutters for Reamers. — Often the same kind of fluting cutters as are used for hand taps are employed for reamers also. The reamer, however, does not remove the same amount of metal as does the tap, and consequently there is no need for the same amount of chip room. The radius in the bottom of the flute is made smaller, because the flute, being made shallower, does not take away so much of the strength of the reamer, and consequently the reënforcement in the form of a liberal round in the bottom of the flute is not necessary. Besides, the flutes on very small reamers are so shallow that a comparatively large radius on the fluting cutter would give a too great negative front rake to the teeth.

Figs. 225 and 226 give the usual forms of reamer fluting cutters. Fig. 225 shows a cutter of the same kind as used for taps, but with a smaller radius, *D*. This class of cutter is used for smaller size reamers, say up to 1¾ inches diameter inclusive, while the cutter Fig. 226 is used for larger sizes. The inclusive angle between the cutting faces of the cutters is 85 degrees in both cases, the same as for tap fluting cutters, but while the cutter Fig. 225 has one face making 55 and the other 30 degrees with a line perpendicular to the axis of the cutter, in the cutter Fig. 226 these angles are 15 and 70 degrees respectively.

In Table CV are given the dimensions commonly employed for these cutters and the corresponding sizes of reamers for which they are used.

TABLE CV.

FLUTING CUTTERS FOR REAMERS.

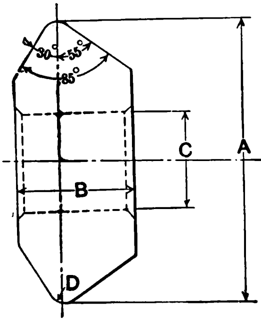

Fig. 225

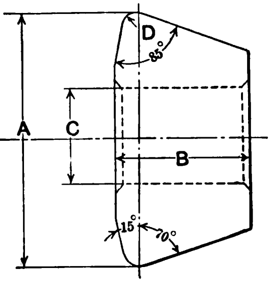

Fig. 226

Diameter of Reamer.	Diameter of Fluting Cutter.	Thickness of Fluting Cutter.	Diameter of Hole in Cutter.	Radius between Cutting Faces of Cutter.
	A	*B*	*C*	*D*
$\frac{1}{8}$	$1\frac{3}{4}$	$\frac{3}{16}$	$\frac{3}{4}$	sharp corner, no radius.
$\frac{3}{16}$	$1\frac{3}{4}$	$\frac{3}{16}$	$\frac{3}{4}$	sharp corner, no radius.
$\frac{1}{4}$	$1\frac{3}{4}$	$\frac{3}{16}$	$\frac{3}{4}$	$\frac{1}{64}$
$\frac{3}{8}$	2	$\frac{1}{4}$	$\frac{3}{4}$	$\frac{1}{64}$
$\frac{1}{2}$	2	$\frac{5}{16}$	$\frac{3}{4}$	$\frac{1}{32}$
$\frac{5}{8}$	2	$\frac{3}{8}$	$\frac{3}{4}$	$\frac{1}{32}$
$\frac{3}{4}$	2	$\frac{7}{16}$	$\frac{3}{4}$	$\frac{3}{64}$
1	$2\frac{1}{4}$	$\frac{1}{2}$	1	$\frac{3}{64}$
$1\frac{1}{4}$	$2\frac{1}{4}$	$\frac{9}{16}$	1	$\frac{1}{16}$
$1\frac{1}{2}$	$2\frac{1}{4}$	$\frac{5}{8}$	1	$\frac{1}{16}$
$1\frac{3}{4}$	$2\frac{1}{4}$	$\frac{5}{8}$	1	$\frac{5}{64}$
2	$2\frac{1}{2}$	$\frac{3}{4}$	1	$\frac{5}{64}$
$2\frac{1}{4}$	$2\frac{1}{2}$	$\frac{3}{4}$	1	$\frac{5}{64}$
$2\frac{1}{2}$	$2\frac{1}{2}$	$\frac{7}{8}$	1	$\frac{3}{16}$
$2\frac{3}{4}$	$2\frac{1}{2}$	$\frac{7}{8}$	1	$\frac{3}{16}$
3	$2\frac{1}{2}$	1	1	$\frac{3}{16}$

Setting the Cutter for Fluting. — When setting the cutter for fluting hand reamers, it should be set so that the tooth gets a slight negative rake, that is, the cutter should be set "ahead" of the center as shown in Fig. 227. The amount to set the cutter ahead should be so selected that the angle included between the front face of the tooth and the tangent to the circumference of the reamer at the point representing the cutting edge will be 95 degrees. (See Fig. 227.) A reamer will cut more smoothly if the cutting edge of the tooth has a negative rake than it will if the front face of the tooth is radial, that is, running to the center.

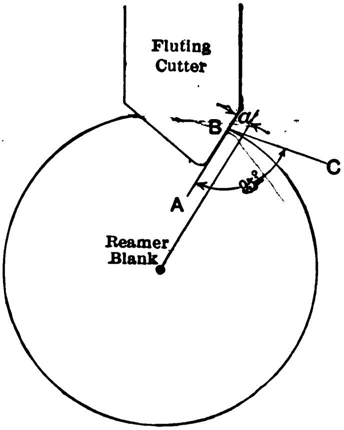

Fig. 227. Setting the Cutter for Fluting Reamers

TABLE CVI.

AMOUNT TO SET CUTTER AHEAD OF RADIAL LINE (see Fig. 227) TO OBTAIN NEGATIVE FRONT RAKE.

Size of Reamer.	*a*	Size of Reamer.	*a*
¼	0.011	1½	0.066
⅜	0.016	1¾	0.076
½	0.022	2	0.087
⅝	0.027	2¼	0.098
¾	0.033	2½	0.109
⅞	0.038	2¾	0.120
1	0.044	3	0.131
1¼	0.055	....	....

In Table CVI the dimension *a*, Fig. 227, or the amount to set the fluting cutter ahead of the radial line, is given. The figures in this table give the angle *ABC* approximately 95 degrees as mentioned.

There may be objections raised to setting the fluting cutter as much as one-eighth inch ahead of the radial line for three-inch reamers, but inasmuch as the angle of negative rake remains the same as for smaller sizes, there is no good reason why this amount should be made any smaller than given in the table.

The depth of the flute should be such that the width of the land of the tooth is about one-fifth of the average distance from the face of one tooth to that of the next. Should it not be as deep, there will not be room in the grooves to hold the chips; should it be deeper, the teeth will not be sufficiently strong, and will spring out into the stock being cut, producing a very unsatisfactory hole which will in all probability be larger than the reamer. The width of the land will, of course, vary somewhat, due to the breaking up of the flutes, which makes some of the lands wider than the others.

Special Reamer Fluting Cutter. — The difficulties encountered in milling the flutes on unequal distances, or breaking up the flutes, as it is commonly termed, are, as mentioned, that if all the grooves are milled to the same depth the remaining land will evidently be wider in the case where the distance from cutting edge to cutting edge is larger than it will be in the case where this distance is smaller. To overcome this it would, of course, be possible to mill the flutes deeper between the cutting edges, which are further apart to insure that the width of the land would be equal in all cases. That this is impracticable when fluting reamers in large quantities is easily apprehended, as it would necessitate raising or lowering the milling-machine table for each flute being cut. In Fig. 228 is shown a method employed by the large machine-tool firm of Ludwig Loewe & Co., Berlin, Germany. The principle of this method is clearly shown in the cut. A formed cutter, eccentrically relieved, is employed, which instead of forming only the flutes, forms the actual land of the reamer, thus insuring that every land will be equally wide with the others. The depth of the flute is determined by the depth of the portion of the cutter in front of the cutting edge of the reamer, and it is easily seen that all the flutes will be equally deep.

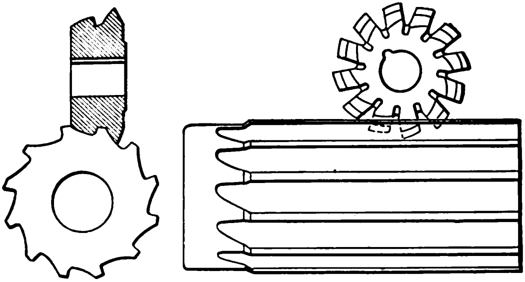

Fig. 228. Special Formed Reamer Fluting Cutter

That this method will be more expensive than the one commonly employed, in which the lands are permitted to become wide or narrow according to the amount the flutes are broken up, is evident, but it cannot be disputed that the general appearance of the reamer will be greatly improved. The greater expense in making reamers in this manner will depend on two factors. In the first place, the eccentrically relieved cutter will cost more to produce than the ordinary fluting cutter. In the second place, the cutting speed cannot be as high with a cutter of this description as it can be with an ordinary milling cutter. On the other hand, it is possible not only to gain the advantages mentioned above in regard to width of land and depth of flute, but incidentally there is also gained the possibility of giving to the flute a more accurate form to answer the requirements of strength as well as chip room, which are often by necessity overlooked on account of the straight sides forming the flutes which must be adopted when using the ordinary straight-sided fluting cutter, with milling cutter teeth of the common shape. While it cannot be expected that this method will be used to any great extent on account of its drawbacks from a commercial point of view, it is ingenious and well worth attention. In Fig. 228 the fluting of a shell reamer is shown, but what has been said applies, of course, equally as well to hand reamers.

PRECAUTIONS IN HARDENING REAMERS.

If the reamers to be hardened are larger than three-quarters inch in diameter they should be held over the fire immediately after being taken from the hardening bath, in order to remove as much as possible the strains caused by the hardening process. Another method is to remove the reamer from the water bath as soon as it stops "singing" and plunge it immediately into an oil bath, allowing the tool to stay in the oil until its temperature has been reduced to that of the oil. The temper should be drawn to 370° F. If reamers spring in hardening they are heated slightly and pressure is applied to the convex side, the reamer being held between centers in the same manner as in a lathe. This same method is applied to long taps and to counterbores and drills.

PRINCIPLES OF GRINDING REAMERS.

When grinding reamers, whether they be given an eccentric or a flat relief, it is necessary to rest the face of the tooth being ground against a guide finger which can be adjusted to give any desired amount of clearance. Fig. 229 shows an end view of a reamer being ground. *A* represents the emery wheel, which should run in the direction of the arrow, so that the tooth of the reamer may be pressed down on the finger *B*. If the wheel were running in the opposite direction, it would have a tendency to pull the tooth of the reamer away from the guide finger; the cutting edge of the tooth would then be ground away, and the reamer would be spoiled. It is claimed that when using a dry grinder, that is, one where water is not used on the emery wheel, the danger of heating the tooth and drawing the temper is greater when the wheel is run in the direction shown in Fig. 229; but if the face of the wheel is kept free from glaze, and ordinary care is exercised, there is little danger of drawing the temper, provided a cutting wheel that is not too fine is used. In order to give the tooth the proper clearance, the guide finger is adjusted to bring the cutting edge below the center line. It should not be attempted to remove too great an amount of stock at one cut; it is better to take a number of successive cuts, going around the reamer several times.

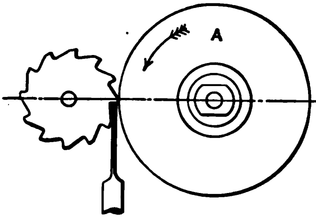

Fig. 229

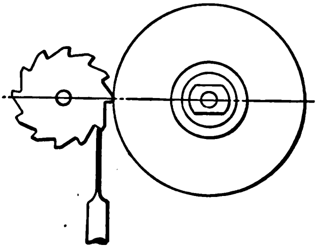

Fig. 230

When grinding reamers it is absolutely necessary to rest the face of the tooth being ground on the guide finger, otherwise the teeth, particularly when irregularly spaced, would not be ground with an equal amount of clearance, nor would all the cutting edges be at an equal distance from the center line of the reamer, and some of the teeth, consequently, would not cut when such reamers were used. Figs. 229 and 230 show, respectively, the correct and incorrect ways of applying the guide finger, it being in Fig. 230 applied to the tooth below the cutting edge being ground.

Care should be taken not to give the cutting edge of a reamer any more clearance than is necessary to permit it to cut freely. Too much clearance produces a weak edge which is liable to chatter, and the reamer soon loses its size.

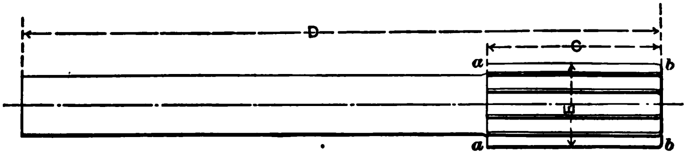

Fig. 231. Fluted Chucking Reamer with Straight Shank

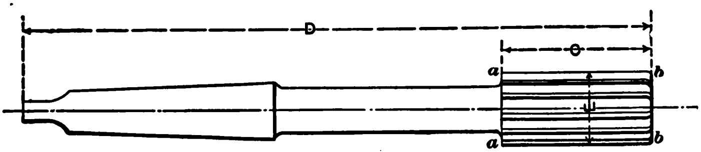

Fig. 232. Fluted Chucking Reamer with Taper Shank

Fluted Chucking Reamers.

Fluted chucking reamers are used in machines for enlarging holes and finishing them smooth and true to size. They are usually provided with either straight or standard taper shank as shown in Figs. 231 and 232. They are not intended for removing any large amount of stock, 0.005 to 0.010 inch being all that should be required. The cutting edges are along the lines *ab*, and at the front end there is a slight round, as shown at *b*.

In cases where a very accurate hole is desired it must be remembered that reamers held rigidly at the end of the shank are liable to cut holes somewhat larger than their own size. In such cases the reamers used for chucking purposes should be somewhat smaller than the final size of the hole to be reamed, and after having reamed the hole by the chucking reamer it should be finished by a hand reamer.

Number of Flutes. — The number of flutes with which fluted chucking reamers should be provided is given in the following table. It will be noticed that the pitch of the cutting edges, or the distance from cutting edge to cutting edge around the circumference of the reamer, is in some cases a trifle smaller than in the case of hand reamers. The same fluting cutters as are used for hand reamers are used for fluted chucking reamers also.

Size of Reamer.	Number of Flutes.
From $\frac{1}{8}$ to $\frac{1}{2}$ inch.	6
From $\frac{17}{32}$ to 1 inch	8
From $1\frac{1}{32}$ to $1\frac{1}{2}$ inches	10
From $1\frac{17}{32}$ to 2 inches	12
From $2\frac{1}{32}$ to $2\frac{1}{2}$ inches	14
From $2\frac{17}{32}$ to 3 inches	16

The slight rounded corners at the end of the flutes *b*, Figs. 231 and 232, should have a radius of one-thirty-second inch for sizes up to and including three-quarters inch, and one-sixteenth inch for larger sizes.

Dimensions. — The only two dimensions of consequence are the over-all length and the length of the cut, denoted *C* and *D*, respectively, in Figs. 231 and 232.

The over-all length of the straight-shank and the taper-shank chucking reamer are usually the same. The taper-shank is nearly always a Morse standard taper. The size of reamer and the corresponding Morse taper shank with which this reamer is provided are as follows:

Size of Reamer.	Number of Morse Taper.
From $\frac{1}{8}$ to $\frac{1}{2}$ inch	1
From $\frac{17}{32}$ to $\frac{7}{8}$ inch....................	2
From $\frac{29}{32}$ to $1\frac{1}{4}$ inches................	3
From $1\frac{9}{32}$ to $1\frac{3}{4}$ inches................	4
From $1\frac{25}{32}$ to 3 inches................	5

The length of the cut, *C*, and the total length, *D*, Figs. 231 and 232, may be determined from the formulas:

$$C = E + \tfrac{3}{4} \text{ inch and}$$
$$D = 4\,E + 5 \text{ inches,}$$

in which formula *E* denotes the diameter of the reamer. Dimensions figured from these formulas will be found in Table CVII.

The diameter of the neck between the fluted part of the reamer and the taper shank, Fig. 232, should be about one-thirty-second inch smaller than either the diameter of the reamer or the diameter at the large end of the shank, depending upon which of these two diameters is the smaller, so that the grinding wheel will clear the necked portion when both the reamer part and the shank part are ground.

The diameter of the straight shank should be from one-sixteenth to one-quarter inch below the size of the reamer for sizes up to one and one-half inches diameter. For larger sizes the shank may be proportionally smaller, so that the shank for a two-inch reamer is one and one-half inches and for a three-inch reamer one and three-quarters inches.

TABLE CVII.

DIMENSIONS OF FLUTED CHUCKING REAMERS.

(See Figs. 231 and 232.)

Diameter of Reamer.	Length of Flute.	Total Length.	Diameter of Reamer.	Length of Flute.	Total Length.
E	*C*	*D*	*E*	*C*	*D*
1/4	1	6	1 3/8	2 1/8	10 1/2
5/16	1 1/16	6 1/4	1 1/2	2 1/4	11
3/8	1 1/8	6 1/2	1 5/8	2 3/8	11 1/2
7/16	1 3/16	6 3/4	1 3/4	2 1/2	12
1/2	1 1/4	7	1 7/8	2 5/8	12 1/2
9/16	1 5/16	7 1/4	2	2 3/4	13
5/8	1 3/8	7 1/2	2 1/8	2 7/8	13 1/2
11/16	1 7/16	7 3/4	2 1/4	3	14
3/4	1 1/2	8	2 3/8	3 1/8	14 1/2
7/8	1 5/8	8 1/2	2 1/2	3 1/4	15
1	1 3/4	9	2 3/4	3 1/2	16
1 1/8	1 7/8	9 1/2	3	3 3/4	17
1 1/4	2	10	....	....	....

ROSE CHUCKING REAMERS.

The rose chucking reamer is used for enlarging cored holes, and is so constructed as to be able to remove a considerable amount of stock. As shown in Fig. 233, the cutting edges are on a 45-degree bevel on the end of the reamer. At every other cutting tooth there is a groove cut the full length of the reamer body. This groove serves the purpose of providing a way for the chips to escape, and forms a channel for lubricants to reach the cutting edges, but does not have any cutting edge itself. Rose reamers were formerly made without the grooves. The body of the reamer was solid, with the exception of the cuts made to form the teeth at the end, and for this reason they caused a vast amount of trouble, which has been done away with, however, by cutting grooves for every other tooth as mentioned. In fact, there is no reason why this groove should not be cut for every tooth, excepting that it would increase the expense of making the tool, and not being imperative, this expense is, of course, properly avoided.

Rose chucking reamers are slightly back tapered on the cylindrical body, that is, the diameter at the point with the beveled cutting edges is slightly larger than the body where it joins the shank. This provision also aids to prevent the tool from binding in the hole being reamed. The back taper ought properly not to exceed 0.0005 inch per one inch, although it is usual in the manufacture of these reamers to make this taper as much as 0.001 inch per one inch.

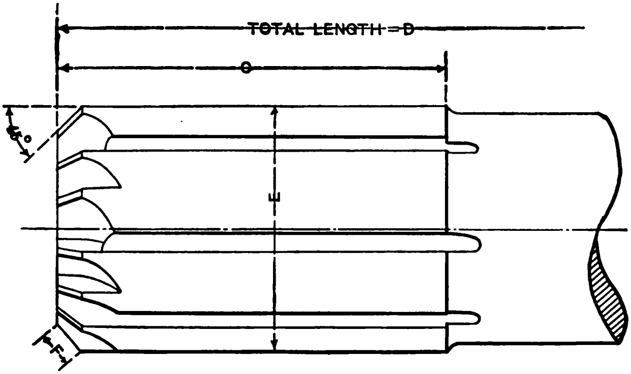

Fig. 233. Rose Chucking Reamer

The length of the beveled edge, *F*, Fig. 233, should increase with the size of the reamers. The length for various sizes should be as follows:

Size of Reamers.	Length of Beveled Cutting Edge, *F*, Fig. 233.
From $\frac{1}{4}$ to $\frac{3}{8}$ inch	$\frac{1}{32}$
From $\frac{13}{32}$ to $\frac{5}{8}$ inch	$\frac{3}{64}$
From $\frac{21}{32}$ to $\frac{7}{8}$ inch	$\frac{1}{16}$
From $\frac{29}{32}$ to $1\frac{1}{8}$ inches	$\frac{5}{64}$
From $1\frac{5}{32}$ to $1\frac{3}{8}$ inches	$\frac{3}{32}$
From $1\frac{13}{32}$ to $1\frac{5}{8}$ inches	$\frac{7}{64}$
From $1\frac{21}{32}$ to 2 inches	$\frac{1}{8}$
From $2\frac{1}{32}$ to $2\frac{3}{8}$ inches	$\frac{5}{32}$
From $2\frac{13}{32}$ to $2\frac{3}{4}$ inches	$\frac{3}{16}$
From $2\frac{25}{32}$ to $3\frac{1}{8}$ inches	$\frac{7}{32}$
From $3\frac{5}{32}$ to $3\frac{1}{2}$ inches	$\frac{1}{4}$
From $3\frac{17}{32}$ to 4 inches	$\frac{5}{16}$

This form of reamer will usually produce holes slightly larger than the size, and should always be made from 0.005 to 0.010 inch smaller than the finished size, and be followed by a fluted reamer for finishing. In cored holes these reamers, however, are of great advantage, firstly, because they can take a heavy cut, and secondly, because they will cut a hole that is nearer parallel than will a fluted reamer if there are blowholes or hard spots in the walls of the surface being worked upon.

Fluting Rose Reamers. — The grooves with which rose reamers are provided along their cylindrical surface, not being intended to produce cutting edges, are not of the same shape as those cut in fluted reamers. A convex cutter, having a width equal to from one-fifth to one-fourth the diameter of the rose reamer itself, should be used for cutting the groove. The depth of the groove should be from one-eighth to one-sixth the diameter of the reamer. The cylindrical part of the reamer between the grooves should not be relieved but should be left circular.

Rose reamers smaller than one-quarter inch in diameter may be made without grooves, but in such a case they should have only three teeth on the end, and fairly deep cuts between the teeth to take care of the chips. The best practice is, however, to provide rose reamers of all sizes with grooves on the cylindrical part.

The number of cutting edges on the 45-degree beveled end of the reamer is as follows:

Size of Reamer.	Number of Cutting Edges.
From $\frac{1}{8}$ to $\frac{1}{2}$ inch	6
From $\frac{17}{32}$ to 1 inch	8
From $1\frac{1}{32}$ to $1\frac{1}{2}$ inches	10
From $1\frac{17}{32}$ to 2 inches	12
From $2\frac{1}{32}$ to $2\frac{1}{2}$ inches	14
From $2\frac{17}{32}$ to 3 inches	16

The number of grooves is evidently equal to half the number of cutting edges, there being one groove on the cylindrical part for every second cut at the end. The cuts at the end are milled with a 75-degree angular cutter. The width of the land at the cutting edge should be about one-fifth the distance from tooth to tooth. If an angular cutter is preferred rather than a convex for cutting the grooves on the cylindrical surface because of the higher cutting speed permissible when milling the grooves, an 80-degree angular cutter with a slight round at the point may be used.

Dimensions. — Rose chucking reamers, like fluted chucking reamers, are made with both straight and taper shank. The same dimensions for the total length as were given for the fluted reamers apply to the rose reamers also, but the length of the grooved portion of the reamer, or the body, is longer. If E is the diameter of the reamer and C the length of the grooved part (see Fig. 233), then

$$C = \frac{3\,E}{2} + 1\tfrac{1}{8} \text{ inches.}$$

In Table CVIII are given the dimensions for rose chucking reamers in accordance with this formula. What was said in regard to the straight and taper shank of these reamers, and the diameter of the neck in the latter class, in connection with fluted chucking reamers applies to rose reamers also.

TABLE CVIII.

DIMENSIONS OF ROSE CHUCKING REAMERS.

(See Fig. 233.)

Diameter of Reamer.	Length of Body.	Total Length.	Diameter of Reamer.	Length of Body.	Total Length.
E	*C*	*D*	*E*	*C*	*D*
$\frac{1}{4}$	$1\frac{1}{2}$	6	$1\frac{3}{8}$	$3\frac{3}{16}$	$10\frac{1}{2}$
$\frac{5}{16}$	$1\frac{5}{8}$	$6\frac{1}{4}$	$1\frac{1}{2}$	$3\frac{3}{8}$	11
$\frac{3}{8}$	$1\frac{11}{16}$	$6\frac{1}{2}$	$1\frac{5}{8}$	$3\frac{9}{16}$	$11\frac{1}{2}$
$\frac{7}{16}$	$1\frac{3}{4}$	$6\frac{3}{4}$	$1\frac{3}{4}$	$3\frac{3}{4}$	12
$\frac{1}{2}$	$1\frac{7}{8}$	7	$1\frac{7}{8}$	$3\frac{15}{16}$	$12\frac{1}{2}$
$\frac{9}{16}$	2	$7\frac{1}{4}$	2	$4\frac{1}{8}$	13
$\frac{5}{8}$	$2\frac{1}{16}$	$7\frac{1}{2}$	$2\frac{1}{8}$	$4\frac{5}{16}$	$13\frac{1}{2}$
$\frac{11}{16}$	$2\frac{1}{8}$	$7\frac{3}{4}$	$2\frac{1}{4}$	$4\frac{1}{2}$	14
$\frac{3}{4}$	$2\frac{1}{4}$	8	$2\frac{3}{8}$	$4\frac{11}{16}$	$14\frac{1}{2}$
$\frac{7}{8}$	$2\frac{7}{16}$	$8\frac{1}{2}$	$2\frac{1}{2}$	$4\frac{7}{8}$	15
1	$2\frac{5}{8}$	9	$2\frac{3}{4}$	$5\frac{1}{4}$	16
$1\frac{1}{8}$	$2\frac{13}{16}$	$9\frac{1}{2}$	3	$5\frac{5}{8}$	17
$1\frac{1}{4}$	3	10	....	....	....

JOBBERS' REAMERS.

The jobbers' reamer, Fig. 234, constitutes a class of reamers by itself. It is provided with a long fluted body and taper shank for use in machine. The corners at the point of the reamer are slightly rounded as shown at *a*. The radius for this rounded part should be about one-thirty-second inch for reamers smaller than three-quarters inch in diameter, and one-sixteenth inch for larger sizes.

Between the fluted portion and the shank a neck is provided in order to permit the shank and the cutting edges to be ground. The length of this neck varies according to the size of the reamer. It is customary to make it about one-half inch long for quarter-inch reamer, 1 inch for a 1-inch, 2 inches long for a 2-inch, and 3 inches long for a 3-inch reamer. The shank is nearly always a Morse standard taper shank. The sizes of shanks to use for various sizes of reamers are as follows:

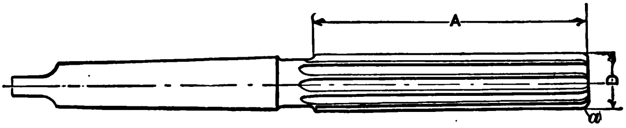

Fig. 234. Jobbers' Reamer

Size of Reamer.	Number of Morse Taper Shank.
From $\frac{1}{4}$ to $\frac{1}{2}$ inch	1
From $\frac{17}{32}$ to $\frac{7}{8}$ inch	2
From $\frac{29}{32}$ to $1\frac{1}{4}$ inches	3
From $1\frac{9}{32}$ to $1\frac{3}{4}$ inches	4
From $1\frac{25}{32}$ to 3 inches	5

Jobbers' reamers are fluted with the same kind of cutters as hand reamers. The number of flutes is also the same as given for hand reamers.

Dimensions. — The length of the neck having already been given, and the number of Morse taper shank determining the length of the shank part of the reamer, the only additional dimensions necessary are the length of the flute and the diameter of the neck. The latter should be about one-thirty-second inch smaller in diameter than either the reamer itself or the largest diameter of the taper shank, depending upon which of these dimensions is the smaller, so that the grinding wheel will clear the neck when grinding the teeth as well as the shank.

The length of the flute may be determined from the formula

$$A = 4\,D + 1 \text{ inch}$$

for sizes up to and including 1¼ inches, and from the formula

$$A = \frac{5\,D}{4} + 4\tfrac{1}{2} \text{ inches}$$

for larger sizes. In these formulas A = length of cut and D = diameter of the reamer. Dimensions for the length of the flutes, approximately figured from these formulas, are given in Table CIX.

TABLE CIX.

DIMENSIONS FOR THE LENGTH OF FLUTES OF JOBBERS' REAMERS.

(See Fig. 234.)

Diameter of Reamer.	Length of Flute.	Diameter of Reamer.	Length of Flute.	Diameter of Reamer.	Length of Flute.
D	A	D	A	D	A
1/4	2	13/16	4 1/4	1 3/4	6 11/16
5/16	2 1/4	7/8	4 1/2	1 7/8	6 7/8
3/8	2 1/2	15/16	4 3/4	2	7
7/16	2 3/4	1	5	2 1/8	7 1/8
1/2	3	1 1/8	5 1/2	2 1/4	7 5/16
9/16	3 1/4	1 1/4	6	2 3/8	7 1/2
5/8	3 1/2	1 3/8	6 1/4	2 1/2	7 5/8
11/16	3 3/4	1 1/2	6 3/8	2 3/4	7 15/16
3/4	4	1 5/8	6 1/2	3	8 1/4

SHELL REAMERS.

In order to save the amount of stock which goes into the shank, shell reamers, having a hole through the center by means of which they are mounted on arbors, are quite largely used. As one arbor can be used for a number of reamers the saving is quite considerable. An ordinary fluted shell reamer is shown in Fig. 235. The arbor on which it is used is shown in Fig. 236. The reamer has a key-way *A* which fits the key *B* on the arbor freely; the reamer, when at work, is rotated by means of this key and key-way. The hole through the reamer tapers, the taper being one-eighth inch per foot. Manufacturers of reamers have adopted certain standard sizes of arbors, and each arbor corresponds to a certain number of different sizes of reamers. Thus several sizes of reamers are provided with the same size hole through them, and can be used with the same arbor. The arbor as well as the hole in the reamer must be ground after hardening to insure that the reamer will run true. When hardening, if the reamer is larger than 1¼ inches in diameter, it should be removed from the hardening bath, the same as large hand reamers, when it ceases "singing," and be plunged into a tank of oil, where it should remain until cool. When the tool is removed from the oil bath, or, in the case of smaller reamers, from the water bath, it should be held over a fire and slowly revolved until at least partly relieved of the internal stresses, tending to crack the tool, which are due to the hardening process.

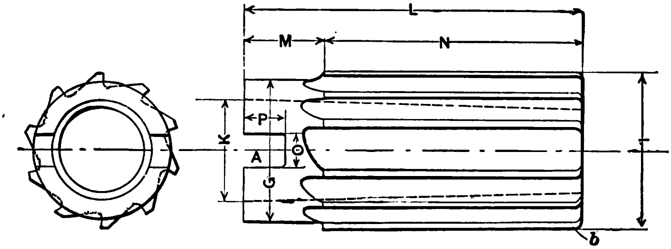

Fig. 235. Fluted Shell Reamer

The outside of the reamer is provided with flutes and cutting edges for the greater part of the length of the reamer. A short distance at the end provided with the key-way is turned down below the diameter of the cutting edges. This is done in order to prevent any burr which may be set up by the driving key on the arbor from interfering with the hole reamed or spoiling the cutting edges of the reamer. Besides, this turned-down portion provides space for marking the reamer with its size, and gives a finished appearance to the tool.

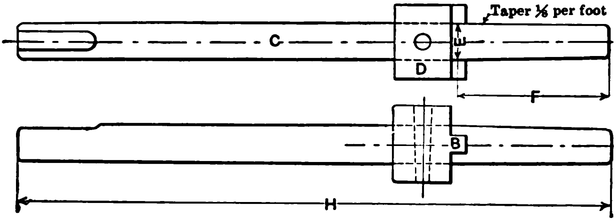

Fig. 236. Arbor for Shell Reamers

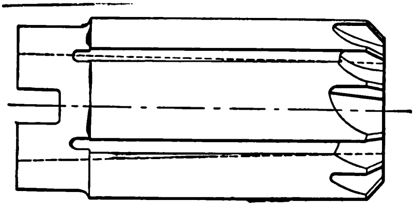

Fig. 237. Rose Shell Reamer

Fig. 237 shows a shell reamer fluted in the same manner as the rose chucking reamer. This reamer is termed a rose shell reamer. The cutting edges, fluting, and back taper are the same as described before under rose chucking reamers, but in all other particulars the tool is the same as an ordinary shell reamer.

Arbors for Shell Reamers. — The arbor used for driving shell reamers when at work consists of a stem or arbor proper, *C*, Fig. 236, provided with a collar *D* which is fastened to the arbor by means of a taper pin. On the end of this collar is milled a tongue *B* so as to provide for a key to fit the key-way in the reamer, as mentioned. Precaution must be taken in milling this tongue so that it will be exactly in the center of the collar. The same care must, of course, be used in milling the key-way in the reamer which must be exactly in the center. When grinding the outside of the reamer to size it should be ground on an arbor similar to that on which it is to be used, and the edge at the front end slightly rounded as at *b*, Fig. 235.

TABLE CX.

DIMENSIONS OF SHELL REAMER ARBORS.

(See Fig. 236 for dimensions denoted by letters.)

Diameter at Size Line.	Length from Size Line to End of Arbor.	Total Length.	Diameter at Size Line.	Length from Size Line to End of Arbor.	Total Length.
E	*F*	*H*	*E*	*F*	*H*
1/8	1 1/2	6	1	3 1/2	12
3/16	1 3/4	7	1 1/4	3 3/4	13
1/4	2	8	1 1/2	4	14
3/8	2 1/4	9	1 3/4	4 1/2	15
1/2	2 1/2	9 1/2	2	5	16
5/8	2 3/4	10	2 1/4	5 1/2	17
3/4	3	11	2 1/2	6	18

Arbors as well as driving collars should preferably be made out of tool steel. The collars should be hardened. The arbors, as manufactured, are made in 14 sizes, the diameter of each being measured at *E*, halfway between the end of the key and the solid part of the body of the collar *D*. The arbor is provided with a flat milled on the shank for the set screws by which it is clamped when held in position for work. In Table CX are given the most important dimensions for these arbors.

Fluting Shell Reamers. — The cutters used for fluting regular shell reamers are the same as for hand reamers. Rose shell reamers are fluted with the same kind of cutters as rose chucking reamers. The number of flutes in shell reamers must necessarily be greater in the smaller sizes than in corresponding sizes of solid reamers, because the flute cannot be cut so deep owing to the thin walls of the shell. The numbers of flutes for regular shell reamers are as follows:

Size of Reamer.	Number of Flutes.
From $\frac{1}{4}$ to $\frac{3}{8}$ inch	6
From $\frac{13}{32}$ to $\frac{5}{8}$ inch	8
From $\frac{21}{32}$ to $1\frac{1}{2}$ inches	10
From $1\frac{17}{32}$ to $2\frac{1}{4}$ inches	12
From $2\frac{9}{32}$ to $2\frac{3}{4}$ inches	14
From $2\frac{25}{32}$ to 4 inches	16
From $4\frac{1}{32}$ to 5 inches	18

The number of cutting edges on the beveled end of rose shell reamers is equal to the number of flutes in the regularly fluted kind. The number of grooves on the cylindrical part of the rose reamer is, of course, half that of the number of cutting edges, there being one groove for every second cutting edge.

Dimensions of Shell Reamers. — The over-all length of the shell reamer must evidently be the same as the length *F* on the arbor (Fig. 236) from the size line to the extreme end. As the same arbor is used for a number of different sizes of reamers, these arrange themselves in certain groups with the same total length. The length of the fluted portion in each such group is, of course, also the same, as well as the dimensions for the key-way. The only dimension which varies in each group besides the size of the reamer itself is the diameter of the turned-down neck. This dimension should be as much less than the diameter of the reamer as stated below.

Diameter of Reamer.	Amount Diameter of Recess should be Less than Diameter of Reamer.
$\frac{1}{4}-\frac{3}{8}$ inch	0.006 inch
$\frac{7}{16}-\frac{3}{4}$ inch	$\frac{1}{64}$ inch
$\frac{13}{16}-1$ inch	$\frac{1}{32}$ inch
$1\frac{1}{16}-1\frac{1}{4}$ inches	$\frac{1}{16}$ inch
$1\frac{5}{16}$ inches and upward	$\frac{1}{8}$ inch

In Table CXI are given the dimensions for the various groups of shell reamers corresponding to the different arbors.

TABLE CXI.

DIMENSIONS OF SHELL REAMERS.

(See Fig. 235.)

Diameter of Reamer.	Diameter of Hole, Large End.	Total Length.	Length of Turned-down Portion.	Length of Flutes.	Width of Key-way.	Depth of Key-way.
I	*K*	*L*	*M*	*N*	*O*	*P*
$\frac{1}{4}-\frac{5}{16}$	$\frac{1}{8}$	$1\frac{1}{2}$	$\frac{3}{8}$	$1\frac{1}{8}$	$\frac{1}{16}$	$\frac{1}{8}$
$\frac{11}{32}-\frac{7}{16}$	$\frac{3}{16}$	$1\frac{3}{4}$	$\frac{3}{8}$	$1\frac{3}{8}$	$\frac{3}{32}$	$\frac{1}{8}$
$\frac{15}{32}-\frac{9}{16}$	$\frac{1}{4}$	2	$\frac{1}{2}$	$1\frac{1}{2}$	$\frac{7}{64}$	$\frac{5}{32}$
$\frac{19}{32}-\frac{11}{16}$	$\frac{3}{8}$	$2\frac{1}{4}$	$\frac{1}{2}$	$1\frac{3}{4}$	$\frac{9}{64}$	$\frac{3}{16}$
$\frac{23}{32}-\frac{15}{16}$	$\frac{1}{2}$	$2\frac{1}{2}$	$\frac{1}{2}$	2	$\frac{11}{64}$	$\frac{1}{4}$
$\frac{31}{32}-1\frac{1}{4}$	$\frac{5}{8}$	$2\frac{3}{4}$	$\frac{5}{8}$	$2\frac{1}{8}$	$\frac{13}{64}$	$\frac{1}{4}$
$1\frac{9}{32}-1\frac{5}{8}$	$\frac{3}{4}$	3	$\frac{5}{8}$	$2\frac{3}{8}$	$\frac{1}{4}$	$\frac{5}{16}$
$1\frac{21}{32}-2$	1	$3\frac{1}{2}$	$\frac{5}{8}$	$2\frac{7}{8}$	$\frac{1}{4}$	$\frac{5}{16}$
$2\frac{1}{32}-2\frac{1}{2}$	$1\frac{1}{4}$	$3\frac{3}{4}$	$\frac{3}{4}$	3	$\frac{5}{16}$	$\frac{3}{8}$
$2\frac{17}{32}-3$	$1\frac{1}{2}$	4	$\frac{3}{4}$	$3\frac{1}{4}$	$\frac{5}{16}$	$\frac{3}{8}$
$3\frac{1}{32}-3\frac{1}{2}$	$1\frac{3}{4}$	$4\frac{1}{2}$	1	$3\frac{1}{2}$	$\frac{5}{16}$	$\frac{3}{8}$
$3\frac{17}{32}-4$	2	5	1	4	$\frac{5}{16}$	$\frac{3}{8}$
$4\frac{1}{32}-4\frac{1}{2}$	$2\frac{1}{4}$	$5\frac{1}{2}$	1	$4\frac{1}{2}$	$\frac{5}{16}$	$\frac{3}{8}$
$4\frac{17}{32}-5$	$2\frac{1}{2}$	6	1	5	$\frac{5}{16}$	$\frac{3}{8}$

TAPER REAMERS.

Taper reamers are used for reaming holes for standard taper pins and for taper sockets. A special kind of taper reamer is made for locomotive work. The reamers for standard taper-pin holes are usually always finishing reamers, whereas for reaming taper sockets or other work with large tapered holes usually both a roughing and a finishing reamer are employed. The roughing reamer is simply intended to remove enough stock so that the finishing reamer can produce a smooth hole true to size, without being exposed to excessive wear, and thus retain its correct size so much the longer.

Roughing Taper Reamers. — Roughing taper reamers, such as are used for reaming Morse and Brown and Sharpe standard taper sockets, are made exactly like the finishing reamers, except that they are made about 0.010 inch smaller in diameter, and are provided with a spiral groove cut like a thread all around the cutting edges, as shown in Fig. 238. This thread or groove breaks up the chips in the same manner as the nicks in the cutting edges of plain milling cutters. The thread is cut left-hand, with a tool similar to a square-thread tool but with the corners slightly rounded. The width of the tool should vary from about one-thirty-second inch for the smallest size reamer for Morse taper sockets to three-thirty-seconds inch for the largest sizes. The depth of the groove should be slightly more than one-half of the width of the tool.

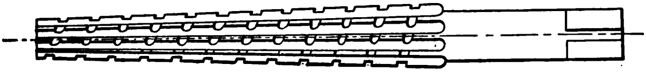

Fig. 238. Roughing Taper Reamer.

After being hardened and drawn to a temperature of about 370° F., the roughing reamer should be ground with a somewhat greater clearance than the finishing reamer.

The pitch of the thread should be one-fifth inch for the smallest sizes of roughing taper reamers up to one-third inch for the largest sizes; that is, there will be from three to five threads per inch, according to size, along the cutting edge.

The cutting edges of roughing taper reamers are sometimes cut spiral. The spiral may be a right-hand one in this case, as there is no danger of the reamer drawing into the work too suddenly on account of the taper. However, most manufacturers make both roughing and finishing reamers with straight flutes whenever there is not an exceptionally steep taper or a long tapered hole to be reamed. In such a case the roughing reamers are constructed upon a different principle from the one just described. The reamer is turned somewhat over-size, and ground to the correct diameter desired before being fluted. It is then returned to the lathe and a thread cut on the surface with a square-nosed tool one-quarter inch wide. The pitch of the thread is one-quarter inch, and the depth such that the ground surface at the end of the cut nearest the point of the reamer is barely touched, as shown in Fig. 239. In the cut the dash-dotted lines indicate the ground tool blank before the thread is cut, and the full lines the appearance of the blank with its thread. This latter is left-handed, and each step is slightly back tapered, say 0.002 inch in the distance of one-quarter inch; that is, the point *a* of each step is 0.002 inch further away from the axis of the reamer than the point *b*. After threading, the reamer is fluted with left-hand spiral flutes, the spiral being so selected that the angle which the cutting edges make with a plane through the axis of the reamer is 15 degrees. Some tool-makers also advocate an odd number of flutes for these reamers, but as long as the reamer is provided with spiral flutes there seems to be no valid reason why an odd number of flutes should add any advantages.

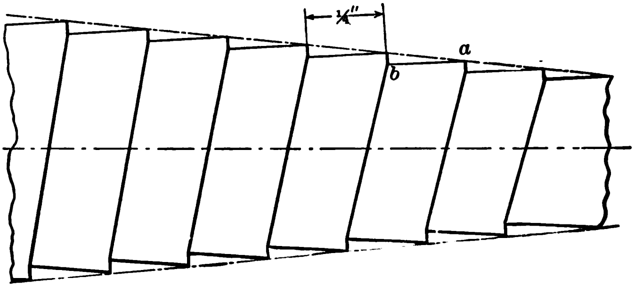

Fig. 239. Method of Making Steep Taper Roughing Reamer

Fig. 240 shows another form of roughing taper reamer for steep tapers. This form is known as a step reamer. In fact, this tool is a kind of multiple counterbore; each step together with the previous one forms a complete counterbore, the smaller step being the guide, the larger the body. All the cutting is done at the front end of each step. The cylindrical portion of the step should not be relieved, but it is preferable to slightly back taper these portions the same as in the case of the threaded

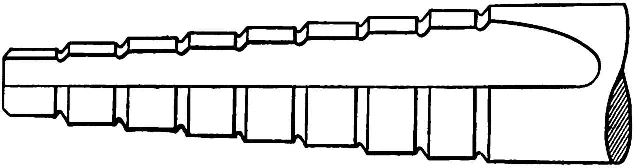

Fig. 240. Step Reamer

taper reamer. The flutes may be straight or spiral; if the latter, the same angle of spiral as mentioned previously should be selected. The number of flutes for this kind of reamer is usually four.

Finishing Taper Reamers. — Finishing taper reamers, as shown in Fig. 241, are similar to ordinary hand reamers, except that the cutting edges taper. The flutes are almost always cut straight, but spiral flutes are of advantage in porous metal or in work pierced crosswise by other holes or openings. The spiral should be right-handed, there being no tendency to draw the reamer into the hole on account of the taper of the hole.

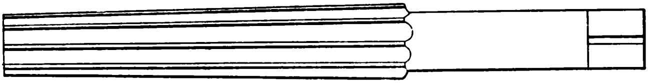

Fig. 241. Finishing Taper Reamer

Taper-pin Reamers. — Taper-pin reamers, as mentioned, are intended for reaming holes for standard taper pins. The taper is one-quarter inch per foot. The diameter of the small end of the reamer should be such that the reamer will project at least one-sixteenth inch, or, on larger sizes, one-eighth inch, through the hole reamed for the longest standard taper pin of the size in question. The cutting edges should be enough longer than the longest pin to permit the reamer to be ground a number of times without being too small in diameter at the upper end of the flutes for the size pin for which it is intended.

In Table CXII are given the standard dimensions for taper pins as adopted by the Pratt and Whitney Company, and in Table CXIII the dimensions for corresponding sizes of taper-pin reamers. These reamers are provided with a square on the end of the shank for a tap wrench. The length of the square should be about one and one-half times the diameter of the shank. The size of the square should be three-quarters the diameter of the shank.

TABLE CXII.

STANDARD TAPER PINS.

No. of Taper-pin.	Diam. at Large End of Pin.	Approx. Fractional Size at Large End of Pin.	Length of Longest Pin of this Size.	No. of Taper Pin.	Diam. at Large End of Pin.	Approx. Fractional Size at Large End of Pin.	Length of Longest Pin of this Size.
000000	0.0715	$\frac{5}{64}$	$\frac{5}{8}$	3	0.219	$\frac{7}{32}$	$1\frac{3}{4}$
00000	0.092	$\frac{3}{32}$	$\frac{5}{8}$	4	0.250	$\frac{1}{4}$	2
0000	0.108	$\frac{7}{64}$	$\frac{3}{4}$	5	0.289	$\frac{19}{64}$	$2\frac{1}{4}$
000	0.125	$\frac{1}{8}$	$\frac{3}{4}$	6	0.341	$\frac{11}{32}$	$3\frac{1}{4}$
00	0.147	$\frac{9}{64}$	1	7	0.409	$\frac{13}{32}$	$3\frac{3}{4}$
0	0.156	$\frac{5}{32}$	1	8	0.492	$\frac{1}{2}$	$4\frac{1}{2}$
1	0.172	$\frac{11}{64}$	$1\frac{1}{4}$	9	0.591	$\frac{19}{32}$	$5\frac{1}{4}$
2	0.193	$\frac{3}{16}$	$1\frac{1}{2}$	10	0.706	$\frac{28}{32}$	6

TABLE CXIII.

DIMENSIONS OF TAPER-PIN REAMERS.

No. of Taper-pin Reamer	Total Length of Reamer	Length of Cutting Edges.	Length of Shank.	Diam. at Small End of Reamer	No. of Taper-pin Reamer	Total Length of Reamer	Length of Cutting Edges.	Length of Shank.	Diam. at Small End of Reamer
000000	$1\frac{1}{2}$	1	$\frac{1}{2}$	0.057	3	$3\frac{3}{8}$	$2\frac{1}{4}$	$1\frac{1}{8}$	0.182
00000	$1\frac{1}{2}$	1	$\frac{1}{2}$	0.078	4	$3\frac{7}{8}$	$2\frac{5}{8}$	$1\frac{1}{4}$	0.205
0000	$1\frac{3}{4}$	$1\frac{1}{8}$	$\frac{5}{8}$	0.091	5	$4\frac{3}{8}$	3	$1\frac{3}{8}$	0.239
000	$1\frac{3}{4}$	$1\frac{1}{8}$	$\frac{5}{8}$	0.108	6	$5\frac{1}{2}$	4	$1\frac{1}{2}$	0.270
00	$2\frac{1}{4}$	$1\frac{7}{16}$	$\frac{13}{16}$	0.125	7	$6\frac{1}{4}$	$4\frac{1}{2}$	$1\frac{3}{4}$	0.328
0	$2\frac{3}{8}$	$1\frac{1}{2}$	$\frac{7}{8}$	0.134	8	$7\frac{1}{4}$	$5\frac{1}{4}$	2	0.395
1	$2\frac{3}{4}$	$1\frac{3}{4}$	1	0.145	9	$8\frac{3}{8}$	$6\frac{1}{8}$	$2\frac{1}{4}$	0.479
2	3	2	1	0.161	10	$9\frac{1}{2}$	7	$2\frac{1}{2}$	0.578

The number of flutes in taper-pin reamers should be chosen as follows:

Number of Taper-pin Reamer.	Number of Flutes.
000000–00	4
0–7	6
8–10	8

Taper Reamers for Morse Standard Taper Sockets. — For reaming Morse standard taper sockets two reamers are used, one roughing and one finishing. The construction of the former has already been described. The finishing reamer is made like the taper-pin reamer, with the exception, of course, that the taper is according to the Morse standard taper gauges. This taper is different for the different sizes or numbers of Morse tapers, but is approximately five-eighths inch per foot. The exact figures for the taper are given in Table CXIV.

These reamers are provided with a square, the length of which should be about equal to the diameter of the shank. The size of the square should be three-quarters the diameter of the shank. This leaves a small round on the corners of the square which is desirable for the appearance of the tool as well as for the convenience of handling a tool without sharp corners.

In Table CXIV are given all essential dimensions for these reamers, and in Table CXV the dimensions for Morse standard taper shanks. These taper shanks are the ones most extensively used of all standard taper shanks. It is practically the only taper shank ever used on drills and reamers.

The number of flutes in roughing as well as finishing reamers should be as follows:

Reamer for Morse Taper Sockets No.	Number of Flutes.
0–1	6
2–4	8
5	10
6	14
7	16

TABLE CXIV.

DIMENSIONS OF REAMERS FOR MORSE STANDARD TAPERS.

No. of Morse Standard Taper.	Total Length of Reamer.	Length of Cutting Edges.	Length of Shank.	Diameter at Small End, Finishing Reamer.	Diameter at Small End, Roughing Reamer.	Taper per Foot.
0	4	2½	1½	0.252	0.242	0.625
1	4⅝	2¾	1⅞	0.369	0.359	0.600
2	5½	3¼	2¼	0.572	0.562	0.602
3	6⅝	4	2⅝	0.778	0.768	0.602
4	8	5	3	1.020	1.010	0.623
5	9½	6⅛	3⅜	1.475	1.465	0.630
6	12	8¼	3¾	2.116	2.106	0.626
7	15	11	4	2.750	2.740	0.625

TABLE CXV.

DIMENSIONS OF MORSE STANDARD TAPERS.

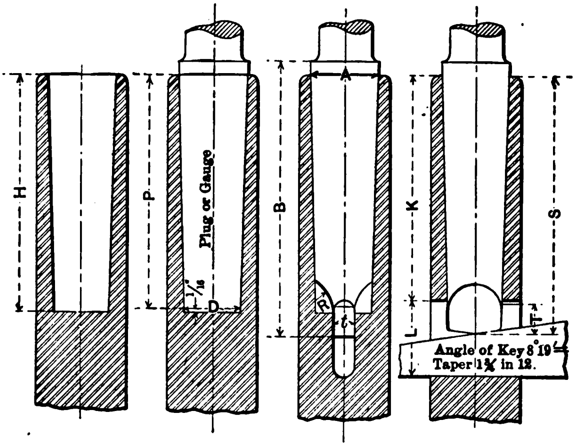

Fig. 242

Number of Taper.	Diameter of Plug at Small End.	Diameter at End of Socket.	Standard Plug Depth.	Whole Length of Shank.	Depth of Hole.	End of Socket to Key-way.	Length of Key-way.	Length of Tongue.	Thickness of Tongue.	Width of Key-way.	Shank Depth.	Taper per Foot.
	D	*A*	*P*	*B*	*H*	*K*	*L*	*T*	*t*		*S*	
0	0.252	0.356	2	$2\frac{11}{32}$	$2\frac{1}{32}$	$1\frac{15}{16}$	$\frac{9}{16}$	$\frac{1}{4}$	$\frac{5}{32}$	0.160	$2\frac{7}{32}$	0.625
1	0.369	0.475	$2\frac{1}{8}$	$2\frac{9}{16}$	$2\frac{3}{16}$	$2\frac{1}{16}$	$\frac{3}{4}$	$\frac{5}{16}$	$\frac{13}{64}$	0.213	$2\frac{3}{8}$	0.600
2	0.572	0.700	$2\frac{9}{16}$	$3\frac{1}{16}$	$2\frac{5}{8}$	$2\frac{1}{2}$	$\frac{7}{8}$	$\frac{3}{8}$	$\frac{1}{4}$	0.260	$2\frac{7}{8}$	0.602
3	0.778	0.938	$3\frac{3}{16}$	$3\frac{3}{4}$	$3\frac{1}{4}$	$3\frac{1}{16}$	$1\frac{1}{16}$	$\frac{7}{16}$	$\frac{5}{16}$	0.322	$3\frac{9}{16}$	0.602
4	1.020	1.231	$4\frac{1}{16}$	$4\frac{3}{4}$	$4\frac{1}{8}$	$3\frac{7}{8}$	$1\frac{1}{4}$	$\frac{1}{2}$	$\frac{15}{32}$	0.478	$4\frac{1}{2}$	0.623
5	1.475	1.748	$5\frac{3}{16}$	6	$5\frac{1}{4}$	$4\frac{15}{16}$	$1\frac{1}{2}$	$\frac{5}{8}$	$\frac{5}{8}$	0.635	$5\frac{3}{4}$	0.630
6	2.116	2.494	$7\frac{1}{4}$	$8\frac{5}{16}$	$7\frac{3}{8}$	7	$1\frac{3}{4}$	$\frac{7}{8}$	$\frac{3}{4}$	0.760	8	0.626
7	2.750	3.270	10	$11\frac{5}{8}$	$10\frac{1}{8}$	$9\frac{1}{2}$	$2\frac{5}{8}$	$1\frac{3}{8}$	$1\frac{1}{8}$	1.135	$11\frac{1}{4}$	0.625

Taper Reamers for Brown and Sharpe Standard Taper Sockets. — Roughing and finishing reamers are used the same as for the Morse taper sockets. The taper is one-half inch per foot, except taper No. 10, which is 0.5161 inch per foot. In Table CXVI are given all the essential dimensions for the reamers, and in Table CXVII the dimensions for the taper shanks. It will be noticed that in certain cases there are a number of different lengths corresponding to the same number of taper, all being of the same diameter at the small end. While the lengths of the shanks are different, the reamers can all be made the same for the same number of taper, inasmuch as the diameter at the small end is the same, and the only thing to consider is to make the length of the cutting edges of the reamers long enough for the longest or deepest taper socket of a particular size, in which case they, of course, will be sufficient for the shorter lengths.

TABLE CXVI.

DIMENSIONS OF REAMERS FOR BROWN AND SHARPE STANDARD TAPERS.

No. of Taper.	Total Length of Reamer.	Length of Cutting Edges.	Length of Shank.	Diameter at Small End, Finishing Reamer.	Diameter at Small End, Roughing Reamer.	Taper per Foot.
1	2	1¼	¾	0.197	0.187	0.500
2	2¾	1⅝	1⅛	0.247	0.237	0.500
3	4	2½	1½	0.309	0.299	0.500
4	4	2½	1½	0.347	0.337	0.500
5	4¾	2⅞	1⅞	0.447	0.437	0.500
6	6¼	4	2¼	0.497	0.487	0.500
7	7¼	4¾	2½	0.597	0.587	0.500
8	7¼	4¾	2½	0.747	0.737	0.500
9	7¾	5	2¾	0.897	0.887	0.500
10	10¼	7⅛	3⅛	1.042	1.032	0.516
11	11	7¾	3¼	1.247	1.237	0.500
12	11½	8⅛	3⅜	1.497	1.487	0.500
13	12¼	8¾	3½	1.747	1.737	0.500
14	13	9¼	3¾	1.997	1.987	0.500
15	13½	9¾	3¾	2.247	2.237	0.500
16	14	10¼	3¾	2.497	2.487	0.500
17	15	11	4	2.747	2.737	0.500
18	15½	11½	4	2.997	2.987	0.500

TABLE CXVII.

DIMENSIONS OF BROWN AND SHARPE TAPER SHANKS.

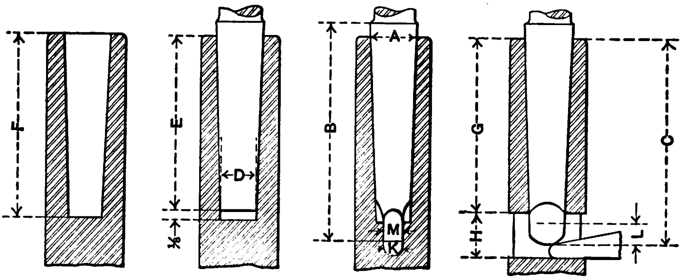

Fig. 243

Number of Taper.	Diameter at End of Socket.	Whole Length of Shank.	Shank Depth.	Diameter of Plug at Small End.	Standard Plug Depth.	Depth of Hole.	End of Socket to Key-way.	Length of Key-way.	Width of Key-way.	Length of Tongue.	Thickness of Tongue.
	A	*B*	*C*	*D*	*E*	*F*	*G*	*H*	*K*	*L*	*M*
1	0.239	$1\frac{9}{32}$	$1\frac{3}{16}$	0.200	$\frac{15}{16}$	$1\frac{1}{16}$	$\frac{15}{16}$	$\frac{3}{8}$	0.135	$\frac{3}{16}$	$\frac{1}{8}$
2	0.299	$1\frac{19}{32}$	$1\frac{1}{2}$	0.250	$1\frac{3}{16}$	$1\frac{5}{16}$	$1\frac{11}{64}$	$\frac{1}{2}$	0.166	$\frac{1}{4}$	$\frac{5}{32}$
3	0.375	$1\frac{31}{32}$	$1\frac{7}{8}$	0.312	$1\frac{1}{2}$	$1\frac{5}{8}$	$1\frac{15}{32}$	$\frac{5}{8}$	0.197	$\frac{5}{16}$	$\frac{3}{16}$
3	0.385	$2\frac{7}{32}$	$2\frac{1}{8}$	0.312	$1\frac{3}{4}$	$1\frac{7}{8}$	$1\frac{23}{32}$	$\frac{5}{8}$	0.197	$\frac{5}{16}$	$\frac{3}{16}$
3	0.395	$2\frac{15}{32}$	$2\frac{3}{8}$	0.312	2	$2\frac{1}{8}$	$1\frac{31}{32}$	$\frac{5}{8}$	0.197	$\frac{5}{16}$	$\frac{3}{16}$
4	0.402	$1\frac{3}{4}$	$1\frac{21}{32}$	0.350	$1\frac{1}{4}$	$1\frac{3}{8}$	$1\frac{13}{64}$	$\frac{11}{16}$	0.228	$\frac{11}{32}$	$\frac{7}{32}$
4	0.420	$2\frac{3}{16}$	$2\frac{3}{32}$	0.350	$1\frac{11}{16}$	$1\frac{13}{16}$	$1\frac{41}{64}$	$\frac{11}{16}$	0.228	$\frac{11}{32}$	$\frac{7}{32}$
5	0.523	$2\frac{9}{32}$	$2\frac{3}{16}$	0.450	$1\frac{3}{4}$	$1\frac{7}{8}$	$1\frac{11}{16}$	$\frac{3}{4}$	0.260	$\frac{3}{8}$	$\frac{1}{4}$
5	0.533	$2\frac{17}{32}$	$2\frac{7}{16}$	0.450	2	$2\frac{1}{8}$	$1\frac{15}{16}$	$\frac{3}{4}$	0.260	$\frac{3}{8}$	$\frac{1}{4}$
5	0.539	$2\frac{21}{32}$	$2\frac{9}{16}$	0.450	$2\frac{1}{8}$	$2\frac{1}{4}$	$2\frac{1}{16}$	$\frac{3}{4}$	0.260	$\frac{3}{8}$	$\frac{1}{4}$
6	0.599	$2\frac{31}{32}$	$2\frac{7}{8}$	0.500	$2\frac{3}{8}$	$2\frac{1}{2}$	$2\frac{19}{64}$	$\frac{7}{8}$	0.291	$\frac{7}{16}$	$\frac{9}{32}$
6	0.635	$3\frac{27}{32}$	$3\frac{3}{4}$	0.500	$3\frac{1}{4}$	$3\frac{3}{8}$	$3\frac{11}{64}$	$\frac{7}{8}$	0.291	$\frac{7}{16}$	$\frac{9}{32}$
7	0.704	$3\frac{1}{8}$	$3\frac{1}{32}$	0.600	$2\frac{1}{2}$	$2\frac{5}{8}$	$2\frac{13}{32}$	$\frac{15}{16}$	0.322	$\frac{15}{32}$	$\frac{5}{16}$
7	0.720	$3\frac{1}{2}$	$3\frac{13}{32}$	0.600	$2\frac{7}{8}$	3	$2\frac{25}{32}$	$\frac{15}{16}$	0.322	$\frac{15}{32}$	$\frac{5}{16}$
7	0.725	$3\frac{5}{8}$	$3\frac{17}{32}$	0.600	3	$3\frac{1}{8}$	$2\frac{29}{32}$	$\frac{15}{16}$	0.322	$\frac{15}{32}$	$\frac{5}{16}$
7	0.767	$4\frac{5}{8}$	$4\frac{17}{32}$	0.600	4	$4\frac{1}{8}$	$3\frac{29}{32}$	$\frac{15}{16}$	0.322	$\frac{15}{32}$	$\frac{5}{16}$
8	0.898	$4\frac{1}{4}$	$4\frac{1}{8}$	0.750	$3\frac{9}{16}$	$3\frac{11}{16}$	$3\frac{29}{64}$	1	0.353	$\frac{1}{2}$	$\frac{11}{32}$
8	0.917	$4\frac{11}{16}$	$4\frac{9}{16}$	0.750	4	$4\frac{1}{8}$	$3\frac{57}{64}$	1	0.353	$\frac{1}{2}$	$\frac{11}{32}$
9	1.067	$4\frac{3}{4}$	$4\frac{5}{8}$	0.900	4	$4\frac{1}{8}$	$3\frac{7}{8}$	$1\frac{1}{8}$	0.385	$\frac{9}{16}$	$\frac{3}{8}$
9	1.077	5	$4\frac{7}{8}$	0.900	$4\frac{1}{4}$	$4\frac{3}{8}$	$4\frac{1}{8}$	$1\frac{1}{8}$	0.385	$\frac{9}{16}$	$\frac{3}{8}$
10	1.260	$5\frac{27}{32}$	$5\frac{23}{32}$	1.0446	5	$5\frac{1}{8}$	$4\frac{27}{32}$	$1\frac{5}{16}$	0.447	$\frac{21}{32}$	$\frac{7}{16}$
10	1.289	$6\frac{17}{32}$	$6\frac{13}{32}$	1.0446	$5\frac{11}{16}$	$5\frac{13}{16}$	$5\frac{17}{32}$	$1\frac{5}{16}$	0.447	$\frac{21}{32}$	$\frac{7}{16}$
10	1.312	$7\frac{1}{16}$	$6\frac{15}{16}$	1.0446	$6\frac{7}{32}$	$6\frac{11}{32}$	$6\frac{1}{16}$	$1\frac{5}{16}$	0.447	$\frac{21}{32}$	$\frac{7}{16}$
11	1.498	$6\frac{25}{32}$	$6\frac{21}{32}$	1.250	$5\frac{15}{16}$	$6\frac{1}{16}$	$5\frac{25}{32}$	$1\frac{5}{16}$	0.447	$\frac{21}{32}$	$\frac{7}{16}$
11	1.531	$7\frac{19}{32}$	$7\frac{15}{32}$	1.250	$6\frac{3}{4}$	$6\frac{7}{8}$	$6\frac{19}{32}$	$1\frac{5}{16}$	0.447	$\frac{21}{32}$	$\frac{7}{16}$
12	1.797	$8\frac{1}{16}$	$7\frac{15}{16}$	1.500	$7\frac{1}{8}$	$7\frac{1}{4}$	$6\frac{15}{16}$	$1\frac{1}{2}$	0.510	$\frac{3}{4}$	$\frac{1}{2}$
13	2.073	$8\frac{11}{16}$	$8\frac{9}{16}$	1.750	$7\frac{3}{4}$	$7\frac{7}{8}$	$7\frac{9}{16}$	$1\frac{1}{2}$	0.510	$\frac{3}{4}$	$\frac{1}{2}$
14	2.344	$9\frac{9}{32}$	$9\frac{5}{32}$	2.000	$8\frac{1}{4}$	$8\frac{3}{8}$	$8\frac{1}{32}$	$1\frac{11}{16}$	0.572	$\frac{27}{32}$	$\frac{9}{16}$
15	2.615	$9\frac{25}{32}$	$9\frac{21}{32}$	2.250	$8\frac{3}{4}$	$8\frac{7}{8}$	$8\frac{17}{32}$	$1\frac{11}{16}$	0.572	$\frac{27}{32}$	$\frac{9}{16}$
16	2.885	$10\frac{3}{8}$	$10\frac{1}{4}$	2.500	$9\frac{1}{4}$	$9\frac{3}{8}$	9	$1\frac{7}{8}$	0.635	$\frac{15}{16}$	$\frac{5}{8}$
17	3.156	....	....	2.750	$9\frac{3}{4}$	$9\frac{7}{8}$	......	....	......	....	....
18	3.427	....	....	3.000	$10\frac{1}{4}$	$10\frac{3}{8}$	......	....	......	....	....

The Brown and Sharpe taper shanks are used mostly on shank end mills and T-slot cutters.

The number of flutes in roughing as well as finishing reamers should be as follows:

Reamer for Brown and Sharpe Taper Sockets No.	Number of Flutes.
1–5	6
6–10	8
11–12	10
13	12
14–15	14
16–18	16

Jarno Taper Reamers. — The Jarno taper was proposed several years ago by Mr. Oscar J. Beale of the Brown and Sharpe Company. The taper per foot of all the Jarno taper sizes is 0.600 inch on the diameter. The Jarno taper has the advantage over the other two standard tapers previously mentioned, the Morse and the Brown and Sharpe, in that there is an exact relationship between the diameter of the large end, the diameter of the small end, and the length between the places where these diameters are measured, and this relationship can be expressed by simple formulas. The sizes of the Jarno tapers are known by numbers from 2 and upwards, and by simply designating the number of the taper all other necessary dimensions can be determined by means of the formulas.

Let N = the number of Jarno taper,
D = the diameter of the large end,
d = the diameter of the small end, and
L = the length of the taper.

Then $D = \frac{N}{8}$, $d = \frac{N}{10}$, $L = \frac{N}{2}$.

If, for instance, we want to determine the size of a No. 7 Jarno taper, we find from our formulas that the diameter of the large end is seven-eighths, the diameter of the small end 0.700, and the length 3½ inches. If we figure the taper, we will find it to be 0.600 inch per foot, as stated before. There is no table given for these taper shanks, because, on account of the simplicity of figuring the dimensions for the taper, no table is actually required. This taper, although it has some very decided merits on account of being, one might well say, the only system of standard tapers founded on a scientific method, has not been used to any great extent. The Pratt and Whitney Company have commenced to use it of late for several of their new designs of machines, particularly profiling machines, but it is safe to say that the old standard tapers, the Morse and the Brown and Sharpe still hold their own in almost all ordinary machine-shop practice.

TABLE CXVIII.

REAMERS FOR JARNO TAPERS.

No. of Jarno Taper.	Total Length of Reamer.	Length of Cutting Edge.	Length of Shank.	Diameter at Small End, Finishing Reamer.	Diameter at Small End, Roughing Reamer.
2	2⅝	1⅜	1¼	0.200	0.190
3	3½	2	1½	0.300	0.290
4	4⅜	2⅝	1¾	0.400	0.390
5	5¼	3¼	2	0.500	0.490
6	5⅞	3¾	2⅛	0.600	0.590
7	6½	4¼	2¼	0.700	0.690
8	7⅜	4⅞	2½	0.800	0.790
9	8⅛	5⅜	2¾	0.900	0.890
10	8⅞	6	2⅞	1.000	0.990
11	9½	6½	3	1.100	1.090
12	10⅛	7	3⅛	1.200	1.190
13	10¾	7½	3¼	1.300	1.290
14	11⅜	8	3⅜	1.400	1.390
15	12	8½	3½	1.500	1.490
16	12⅝	9	3⅝	1.600	1.590
17	13⅜	9⅝	3¾	1.700	1.690
18	14	10⅛	3⅞	1.800	1.790
19	14⅝	10⅝	4	1.900	1.890
20	15¼	11⅛	4⅛	2.000	1.990

In Table CXVIII are given the principal dimensions for reamers used to ream out Jarno taper sockets.

The number of flutes in Jarno taper reamers should be as follows:

Number of Jarno Taper.	Number of Flutes.
2	4
3–4	6
5–10	8
11–15	10
16–18	12
19–20	14

Locomotive Taper Reamers. — Taper reamers for locomotive work are generally made in two styles, with squared and with taper shanks, as shown in Figs. 244 and 245. While there are a great many various standards in use in different railroad shops, the commonly accepted standard taper for locomotive taper reamers is one-sixteenth inch per foot.

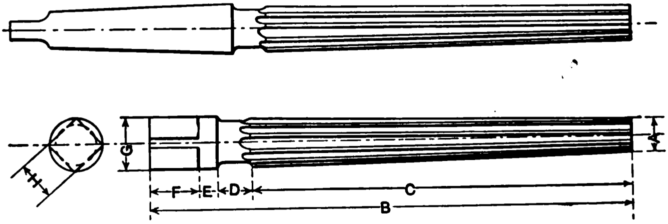

Figs. 244 and 245. Locomotive Taper Reamers

In Table CXIX are given the principal dimensions for locomotive taper reamers with squared shanks as commonly made. The dimensions for the fluted part of those with taper shank, generally Morse taper, are exactly the same, the only difference being the over-all length, which, of course, is dependent upon the number of Morse taper shank used. The common practice is to use the following numbers of Morse taper shanks for the sizes given below:

Sizes of Reamers.	Number of Morse Taper Shank.
From 1/4 to 9/16 inch...........	1
From 5/8 to 7/8 inch............	2
From 15/16 to 1 3/16 inches........	3
From 1 1/4 to 1 11/16 inches........	4
From 1 3/4 to 2 inches..........	5

TABLE CXIX.

DIMENSIONS OF LOCOMOTIVE TAPER REAMERS WITH SQUARED SHANK.

(See Fig. 245.)

Diam. at Small End of Reamer	Total Length	Length of Flutes.	Length of Neck.	Length of Collar.	Length of Square.	Diam. of Collar.	Size of Square.
A	*B*	*C*	*D*	*E*	*F*	*G*	*H*
1/4	5	4	3/8	1/4	3/8	5/16	1/4
5/16	5 3/4	4 1/2	7/16	5/16	1/2	3/8	9/32
3/8	6 1/2	5	9/16	3/8	9/16	7/16	5/16
7/16	7 1/4	5 1/2	5/8	1/2	5/8	1/2	3/8
1/2	8	6	11/16	9/16	3/4	9/16	7/16
9/16	8 3/4	6 1/2	3/4	11/16	13/16	11/16	1/2
5/8	9 3/8	7	3/4	3/4	7/8	3/4	9/16
11/16	10	7 1/2	3/4	13/16	15/16	13/16	5/8
3/4	10 5/8	8	13/16	13/16	1	7/8	11/16
7/8	11 3/4	9	13/16	7/8	1 1/16	1	3/4
1	12 7/8	10	7/8	7/8	1 1/8	1 1/8	13/16
1 1/8	14	11	15/16	7/8	1 3/16	1 1/4	15/16
1 1/4	15 1/8	12	1	7/8	1 1/4	1 3/8	1
1 3/8	16 1/4	13	1 1/16	7/8	1 5/16	1 1/2	1 1/8
1 1/2	17 3/8	14	1 1/8	7/8	1 3/8	1 5/8	1 3/16
1 5/8	18 1/2	15	1 1/8	7/8	1 1/2	1 3/4	1 5/16
1 3/4	19 5/8	16	1 1/8	7/8	1 5/8	1 7/8	1 3/8
1 7/8	20 3/4	17	1 1/8	7/8	1 3/4	2	1 1/2
2	21 3/4	18	1 1/8	7/8	1 3/4	2 1/8	1 9/16

The length of the neck between the taper shank and the cutting portion of the reamer should be from three-eighths inch on the quarter-inch size to one inch on a two-inch reamer. The size of these reamers is measured at the extreme small end of the fluted portion.

The number of flutes should be as follows:

Sizes of Reamers.	Number of Flutes.
From 1/4 to 1/2 inch	6
From 9/16 to 1 1/4 inches	8
From 1 5/16 to 1 3/4 inches	10
From 1 13/16 to 2 inches	12

Pipe Reamers. — Pipe reamers, Fig. 246, are used to precede pipe taps. They are made of the same sizes as pipe taps, excepting that the dimensions of the pipe reamer correspond to the root diameters of the thread of pipe taps.

The taper of pipe reamers is three-quarters inch per foot. They are fluted with the same kind of cutters as hand reamers of sizes corresponding to the diameter at the small end of the pipe reamers. Finishing reamers only are used. The number of flutes for different pipe sizes is as follows:

Pipe Size.	Number of Flutes in Reamer.
From 1/8 to 3/8	6
From 1/2 to 3/4	8
From 1 to 1 1/4	10
From 1 1/2 to 2	12
From 2 1/2 to 3	14
3 1/2	16
4	18

The small end of pipe reamers is slightly chamfered, as shown in Fig. 246, in order to facilitate the entering of the reamer in holes which are of about the same size as the small diameter of the reamer. Dimensions for pipe reamers are given in Table CXX.

Pipe reamers are gauged in the same way as pipe taps, previously described, and the same limits of error are permissible.

TABLE CXX.

DIMENSIONS OF PIPE REAMERS.

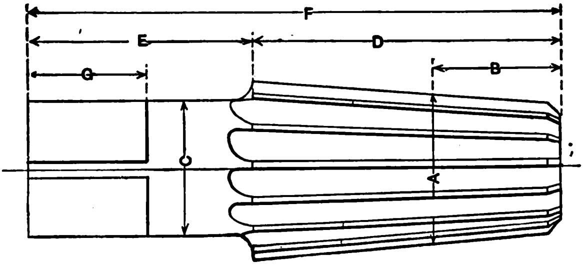

Fig. 246

Pipe Size.	Diameter at Size Line.	Distance from Size Line to Small End.	Diam. of Shank.	Length of Fluted Part.	Length of Shank.	Total Length.	Length of Square.	Size of Square.
	A	*B*	*C*	*D*	*E*	*F*	*G*	
1/8	0.343	25/64	11/32	1	1 5/8	2 5/8	1/2	1/4
1/4	0.447	9/16	7/16	1 1/8	1 3/4	2 7/8	9/16	5/16
3/8	0.582	9/16	9/16	1 1/4	1 7/8	3 1/8	5/8	7/16
1/2	0.721	3/4	3/4	1 1/2	2	3 1/2	11/16	9/16
3/4	0.931	3/4	15/16	1 5/8	2 1/4	3 7/8	3/4	11/16
1	1.170	15/16	1 1/8	1 3/4	2 1/2	4 1/4	13/16	13/16
1 1/4	1.515	31/32	1 5/16	1 7/8	2 3/4	4 5/8	1	1
1 1/2	1.755	1	1 1/2	2	3	5	1 1/8	1 1/8
2	2.230	1	1 7/8	2 1/4	3 1/2	5 3/4	1 3/8	1 3/8
2 1/2	2.667	1 1/2	2 1/4	2 7/8	4	6 7/8	1 11/16	1 11/16
3	3.292	1 9/16	2 5/8	3 1/4	4 1/2	7 3/4	1 15/16	1 15/16
3 1/2	3.792	1 5/8	2 13/16	3 5/8	4 9/16	8 3/16	2 1/8	2 1/8
4	4.292	1 11/16	3	3 3/4	4 5/8	8 3/8	2 1/4	2 1/4

Taper Reamers for Bridge Builders. — Taper reamers for bridge builders, commonly called bridge reamers, are made with Morse taper shank or straight squared shank, as shown in Figs. 247 and 248. The fluted portion is tapered for a distance *D*, Fig. 248, and the remaining part of the flutes, *E*, is straight. These reamers are used for rough structural construction work and are not required to be finished with the same degree of care as reamers for machine construction. After hardening, the flutes are usually left unpolished. These reamers are made in sizes from one-half to $1\frac{1}{4}$ inches. The taper per foot of the tapered portion at the end of the reamer, as usually made, is given in Table CXXI, together with the essential dimensions of the straight-shank type of reamer. The dimensions for the fluted portion of those with Morse taper shank are exactly the same, the only difference being the total length, which, of course, is dependent upon the size of Morse taper shank used. The common practice is to provide the one-half up to five-eighths inch sizes with No. 2, and all sizes eleven-sixteenths inch and larger in diameter with No. 3 Morse taper shank. The size of the reamer is measured on the straight part of the flutes. In the case where an odd number of flutes is

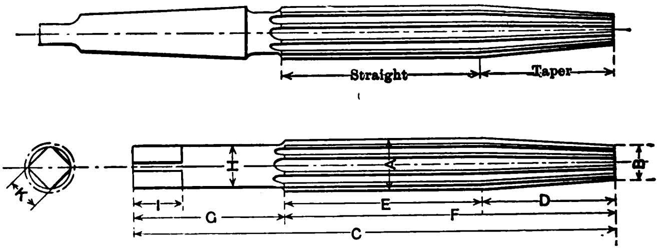

Figs. 247 and 248. Taper Reamers for Bridge Builders employed, the size must be determined by a ring gauge. The number of flutes is made five in all sizes below and including seven-eighths inch diameter, and six for larger sizes.

TABLE CXXI.

DIMENSIONS OF REAMERS FOR BRIDGE BUILDERS.

Diameter of Straight Part of Reamer.	Diameter at Point of Reamer.	Taper per Foot of Tapered Portion.	Total Length of Reamer.	Length of Tapered Part.	Total Length of Flute.	Length of Shank.	Diameter of Shank.	Length of Square.	Size of Square.
A	*B*		*C*	*D*	*F*	*G*	*H*	*I*	*K*
1/2	1/4	1	8 1/8	3	5 1/4	2 7/8	7/16	1/2	5/16
9/16	5/16	1	8 3/8	3	5 1/2	2 7/8	1/2	9/16	3/8
5/8	11/32	1 1/8	8 5/8	3	5 3/4	2 7/8	9/16	5/8	7/16
11/16	3/8	1 1/4	8 7/8	3	6	2 7/8	5/8	11/16	7/16
3/4	7/16	1 1/4	9 1/8	3	6 1/4	2 7/8	11/16	3/4	1/2
13/16	1/2	1 1/4	9 3/8	3	6 1/2	2 7/8	3/4	13/16	9/16
7/8	9/16	1 1/4	9 5/8	3	6 3/4	2 7/8	13/16	7/8	5/8
15/16	5/8	1 1/4	9 7/8	3	6 15/16	2 15/16	7/8	15/16	11/16
1	11/16	1 1/4	10 1/8	3	7 1/8	3	7/8	1	11/16
1 1/16	23/32	1 3/8	10 1/4	3	7 1/4	3	15/16	1 1/16	11/16
1 1/8	3/4	1 1/2	10 3/8	3	7 3/8	3	1	1 1/8	3/4
1 3/16	13/16	1 1/2	10 1/2	3	7 1/2	3	1 1/16	1 3/16	13/16
1 1/4	7/8	1 1/2	10 5/8	3	7 5/8	3	1 1/8	1 1/4	7/8

Table of Amount of Taper in Certain Lengths.—Table CXXII is given in order to facilitate the figuring of the diameter at a certain place of a tapered tool when the diameter at another place and the taper per foot are given. Suppose, for instance, that the diameter at the small end of a reamer is three-quarters inch, the taper is three-thirty-seconds inch per foot (the common taper for locomotive reamers in many railroad shops), and the diameter at the large end of the flutes is desired. The length of the flutes is 9¾ inches. By the use of Table CXXII we find:

$\frac{3}{32}$ taper per foot in 9 inches	0.0703
$\frac{3}{32}$ taper per foot in $\frac{3}{4}$ inch	0.0059
This added to diameter at small end	0.7500
Equals diameter at large end	0.8262

GROOVED CHUCKING REAMERS.

This tool, shown in Fig. 249, is partly a reamer and partly a twist drill. The cutting is performed by the beveled edges *A*, which form an angle of 60 degrees with the axis of the tool. The reamer is provided with three larger semicircular flutes, which are cut on a right-hand spiral, and with three smaller grooves between these. The larger grooves form passages through which the chips pass away; the smaller grooves convey the lubricant to the cutting edges. This form of reamer is extensively used in screw machines for enlarging cored holes, and also in drill presses for enlarging drilled holes, it being easier to enlarge a drilled hole to size by a grooved chucking reamer than to try to drill the hole to size by an ordinary twist drill.

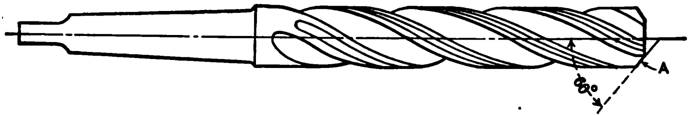

Fig. 249. Grooved Chucking Reamer

This reamer is commonly provided with both straight and Morse taper shank. When provided with Morse taper shank the following numbers of taper shanks should be used for the various sizes of grooved reamers:

Diameter of Reamer.	No. of Morse Taper Shank.
From $\frac{1}{4}$ to $\frac{1}{2}$ inch	1
From $\frac{9}{16}$ to $\frac{7}{8}$ inch	2
From $\frac{15}{16}$ to $1\frac{1}{4}$ inches	3
From $1\frac{5}{16}$ to $1\frac{3}{4}$ inches	4
From $1\frac{13}{16}$ to 3 inches	5

TABLE CXXII.

TABLE GIVING THE AMOUNT OF TAPER IN A CERTAIN LENGTH WHEN THE TAPER PER FOOT IS GIVEN.

Length of Tapered Portion.	Taper per Foot.										
	1/16	3/32	1/8	1/4	3/8	1/2	.600	5/8	3/4	1	1¼
1/32	.0002	.0002	.0003	.0007	.0010	.0013	.0016	.0016	.0020	.0026	.0033
1/16	.0003	.0005	.0007	.0013	.0020	.0026	.0031	.0033	.0039	.0052	.0065
1/8	.0007	.0010	.0013	.0026	.0039	.0052	.0062	.0065	.0078	.0104	.0130
3/16	.0010	.0015	.0020	.0039	.0059	.0078	.0094	.0098	.0117	.0156	.0195
1/4	.0013	.0020	.0026	.0052	.0078	.0104	.0125	.0130	.0156	.0208	.0260
5/16	.0016	.0024	.0033	.0065	.0098	.0130	.0156	.0163	.0195	.0260	.0326
3/8	.0020	.0029	.0039	.0078	.0117	.0156	.0187	.0195	.0234	.0312	.0391
7/16	.0023	.0034	.0046	.0091	.0137	.0182	.0219	.0228	.0273	.0365	.0456
1/2	.0026	.0039	.0052	.0104	.0156	.0208	.0250	.0260	.0312	.0417	.0521
9/16	.0029	.0044	.0059	.0117	.0176	.0234	.0281	.0293	.0352	.0469	.0586
5/8	.0033	.0049	.0065	.0130	.0195	.0260	.0312	.0326	.0391	.0521	.0651
11/16	.0036	.0054	.0072	.0143	.0215	.0286	.0344	.0358	.0430	.0573	.0716
3/4	.0039	.0059	.0078	.0156	.0234	.0312	.0375	.0391	.0469	.0625	.0781
13/16	.0042	.0063	.0085	.0169	.0254	.0339	.0406	.0423	.0508	.0677	.0846
7/8	.0046	.0068	.0091	.0182	.0273	.0365	.0437	.0456	.0547	.0729	.0911
15/16	.0049	.0073	.0098	.0195	.0293	.0391	.0469	.0488	.0586	.0781	.0977
1	.0052	.0078	.0104	.0208	.0312	.0417	.050	.0521	.0625	.0833	.1042
2	.0104	.0156	.0208	.0417	.0625	.0833	.100	.1042	.125	.1667	.2083
3	.0156	.0234	.0312	.0625	.0937	.1250	.150	.1562	.1875	.250	.3125
4	.0208	.0312	.0417	.0833	.125	.1667	.200	.2083	.250	.3333	.4167

TABLE CXXII.—*Continued.*

TABLE GIVING THE AMOUNT OF TAPER IN A CERTAIN LENGTH WHEN THE TAPER PER FOOT IS GIVEN.

Length of Tapered Portion.	Taper per Foot.										
	$\frac{1}{16}$	$\frac{3}{32}$	$\frac{1}{8}$	$\frac{1}{4}$	$\frac{3}{8}$	$\frac{1}{2}$	.600	$\frac{5}{8}$	$\frac{3}{4}$	1	$1\frac{1}{4}$
5	.0260	.0391	.0521	.1042	.1562	.2083	.250	.2604	.3125	.4167	.5208
6	.0312	.0469	.0625	.125	.1875	.250	.300	.3125	.375	.500	.625
7	.0365	.0547	.0729	.1458	.2187	.2917	.350	.3646	.4375	.5833	.7292
8	.0417	.0625	.0833	.1667	.250	.3333	.400	.4167	.500	.6667	.8333
9	.0469	.0703	.0937	.1875	.2812	.375	.450	.4687	.5625	.750	.9375
10	.0521	.0781	.1042	.2083	.3125	.4167	.500	.5208	.625	.8333	1.0417
11	.0573	.0859	.1146	.2292	.3437	.4583	.550	.5729	.6875	.9167	1.1458
12	.0625	.0937	.125	.250	.375	.500	.600	.625	.750	1.000	1.250
13	.0677	.1016	.1354	.2708	.4062	.5417	.650	.6771	.8125	1.0833	1.3542
14	.0729	.1094	.1458	.2917	.4375	.5833	.700	.7292	.875	1.1667	1.4583
15	.0781	.1172	.1562	.3125	.4687	.625	.750	.7812	.9375	1.250	1.5625
16	.0833	.125	.1667	.3333	.500	.6667	.800	.8333	1.000	1.3333	1.6667
17	.0885	.1328	.1771	.3542	.5312	.7083	.850	.8854	1.0625	1.4167	1.7708
18	.0937	.1406	.1875	.3750	.5625	.750	.900	.9375	1.125	1.500	1.875
19	.0990	.1484	.1979	.3958	.5937	.7917	.950	.9896	1.1875	1.5833	1.9792
20	.1042	.1562	.2083	.4167	.625	.8333	1.000	1.0417	1.250	1.6667	2.0833
21	.1094	.1641	.2187	.4375	.6562	.875	1.050	1.0937	1.3125	1.750	2.1875
22	.1146	.1719	.2292	.4583	.6875	.9167	1.100	1.1458	1.375	1.8333	2.2917
23	.1198	.1797	.2396	.4792	.7187	.9583	1.150	1.1979	1.4375	1.9167	2.3958
24	.125	.1875	.250	.500	.750	1.000	1.200	1.250	1.500	2.000	2.500

The length of the fluted part is given in Table CXXIII. The total length of the reamer is dependent upon the length of the Morse taper shank used. When made with straight shank, this latter may be selected of such length that the total length of the tool is the same as when a Morse taper shank is used.

The diameter at the point of this reamer is larger than at the shank end of the flutes, the amount of back taper being 0.003 inch per foot. This prevents the tool from binding in the hole chucked.

The spiral of the flutes should be so selected that the edges of the flutes make an angle of between 25 and 20 degrees with a plane through the axis of the reamer. This corresponds to a lead of the spiral equal to from about 7 to 8.5 times the diameter of the reamer. This is practically the same amount of spiral as is used on twist drills.

TABLE CXXIII.

LENGTH OF FLUTED PORTION OF GROOVED CHUCKING REAMERS.

Diameter of Reamer.	Length of Fluted Portion.	Diameter of Reamer.	Length of Fluted Portion.	Diameter of Reamer.	Length of Fluted. Portion.
$\frac{1}{4}$	4	$\frac{7}{8}$	$8\frac{1}{4}$	2	$9\frac{3}{4}$
$\frac{5}{16}$	$4\frac{1}{2}$	$\frac{15}{16}$	$8\frac{3}{8}$	$2\frac{1}{8}$	$9\frac{7}{8}$
$\frac{3}{8}$	5	1	$8\frac{1}{2}$	$2\frac{1}{4}$	10
$\frac{7}{16}$	$5\frac{1}{2}$	$1\frac{1}{8}$	$8\frac{3}{4}$	$2\frac{3}{8}$	$10\frac{1}{8}$
$\frac{1}{2}$	6	$1\frac{1}{4}$	9	$2\frac{1}{2}$	$10\frac{1}{4}$
$\frac{9}{16}$	$6\frac{1}{2}$	$1\frac{3}{8}$	$9\frac{1}{8}$	$2\frac{5}{8}$	$10\frac{3}{8}$
$\frac{5}{8}$	7	$1\frac{1}{2}$	$9\frac{1}{4}$	$2\frac{3}{4}$	$10\frac{1}{2}$
$\frac{11}{16}$	$7\frac{1}{2}$	$1\frac{5}{8}$	$9\frac{3}{8}$	$2\frac{7}{8}$	$10\frac{5}{8}$
$\frac{3}{4}$	8	$1\frac{3}{4}$	$9\frac{1}{2}$	3	$10\frac{3}{4}$
$\frac{13}{16}$	$8\frac{1}{8}$	$1\frac{7}{8}$	$9\frac{5}{8}$	....	....

CENTER REAMERS.

Center reamers are used for forming the centers on which work is to revolve in lathes or grinding machines. They are made in two different styles. The older one, Fig. 250, has only one cutting edge, formed by cutting away the metal down to the center of the tool and relieving the beveled portion of the remaining half so that a cutting edge is produced. The second and later style is that shown in Fig. 251, which has four flutes or cuts. These cuts are straight, and the lands between the cuts are relieved on the beveled part. The inclusive angle of the point of the tool must, of course, be that used for lathe centers, or 60 degrees.

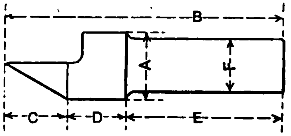

Fig. 250. Old Style Center Reamer

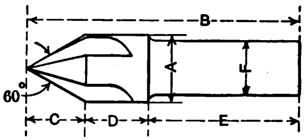

Fig. 251. New Style Center Reamer

These reamers are made with a straight shank. The dimensions of both styles are the same and are given in Table CXXIV.

TABLE CXXIV.

DIMENSIONS OF CENTER REAMERS.

(See Figs. 250 and 251.)

Full Diameter of Reamer.	Total Length.	Length of Beveled Portion, Approx.	Length of Straight Portion.	Length of Shank.	Diameter of Shank.
A	*B*	*C*	*D*	*E*	*F*
$\frac{1}{4}$	$1\frac{3}{8}$	$\frac{7}{32}$	$\frac{5}{32}$	1	$\frac{3}{16}$
$\frac{3}{8}$	$1\frac{5}{8}$	$\frac{5}{16}$	$\frac{5}{16}$	1	$\frac{1}{4}$
$\frac{1}{2}$	2	$\frac{7}{16}$	$\frac{7}{16}$	$1\frac{1}{8}$	$\frac{3}{8}$
$\frac{5}{8}$	$2\frac{3}{8}$	$\frac{17}{32}$	$\frac{19}{32}$	$1\frac{1}{4}$	$\frac{7}{16}$
$\frac{3}{4}$	$2\frac{5}{8}$	$\frac{21}{32}$	$\frac{23}{32}$	$1\frac{1}{4}$	$\frac{1}{2}$
$\frac{7}{8}$	$2\frac{7}{8}$	$\frac{3}{4}$	$\frac{3}{4}$	$1\frac{3}{8}$	$\frac{9}{16}$
1	$3\frac{1}{8}$	$\frac{7}{8}$	$\frac{3}{4}$	$1\frac{1}{2}$	$\frac{5}{8}$

FLAT-SIDED REAMERS.

Very small reamers are sometimes provided with flats instead of actual flutes, the sharp intersection or corner between two flats acting as a cutting edge. These reamers are used for small dowel and taper-pin holes, etc. The diameter of the reamer is, of course, measured over the sharp corners. If the reamer tapers, the taper of the flats will evidently not be the same as the taper of the reamer itself, and the milling-machine head used when milling the flats must be set to a different angle from that which the cutting edge makes with the center line. A simple formula can be given expressing the relation between the taper per foot, the number of flat sides in the reamer, and the angle to which to set the milling-machine head.

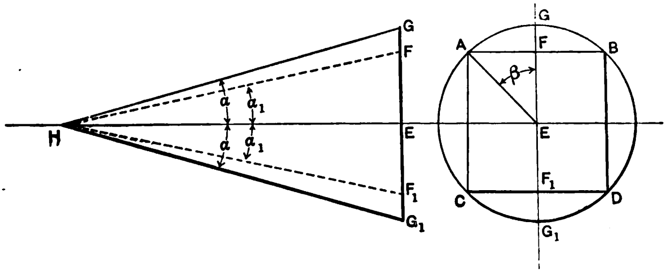

Fig. 252. Determining the Angle to which to set the Index Head for Milling Flat-sided Reamers

Referring to Fig. 252, if

α = one-half included angle of cone,

α_1 = angle made by flat with the axis or center line,

N = number of sides,

T = taper per foot,

then

$$\beta = \frac{360°}{2N}.$$

The formula for the angle desired is

$$\tan \alpha_1 = \frac{GE \times \cos \beta}{HE} = \frac{\frac{1}{2}T}{12} \times \cos \frac{360^\circ}{2N}.$$

Expressed in words, the formula reads:

$$\text{Tangent angular setting} = \frac{\frac{1}{2}\text{ taper per foot}}{12} \times \text{cosine} \frac{360 \text{ degrees}}{2 \times \text{number of sides}}.$$

For example, what would be the proper setting for the milling-machine head when making four-sided reamers for standard taper pins one-quarter inch taper per foot? We find this if we divide one-half the taper per foot by 12, and multiply the quotient by the cosine of 360 divided by 2 times the number of sides. The result is the tangent of the required setting of the index head.

$$\tan \alpha_1 = \frac{\frac{1}{8}}{12} \times \cos 45^\circ$$

$$= \frac{\frac{1}{8} \times 0.707}{12} = 0.00736, \text{ the tangent of the required angle.}$$

Reference to a table of tangents shows that the angle is 25 minutes.

ADJUSTABLE REAMERS.

In order to permit the diameter of the hole reamed to be slightly varied from the standard size, adjustable reamers are used. These may be of two classes, those which are adjusted but still have the cutting edges an integral part of the reamer, as shown in Fig. 253, and those which have inserted blades. The former are usually employed in smaller sizes only, while the latter are commonly used in sizes from 1¼ inches up to 5 inches diameter. On account of the construction of the class of reamers shown in Fig. 253, the reamer cannot expand uniformly its entire length; when that is desired, the reamer with inserted blades must be selected.

Adjustable reamers are often called expansion reamers, and there is no real difference between the two kinds. If any distinction should be made, it would be advisable to call reamers of the type shown in Fig. 253 expansion reamers, as the change in diameter is actually effected by expanding the tool itself, while inserted-blade reamers should be called adjustable reamers.

Expansion Reamers. — Referring to Fig. 253, the reamer shown is originally an ordinary hand reamer provided with guide. The distance *C* represents this guide; *D*, a small neck or groove between the guide and the reamer body; *E*, the cutting edges; *F*, the neck between the cutting edges and the shank; and *G*, the shank. At the forward end of the cutting edges there is a small taper at *P*, the same as in ordinary hand reamers, and the diameter of the guide, which is not fluted, is in the same proportion to the full diameter of the reamer as for hand reamers.

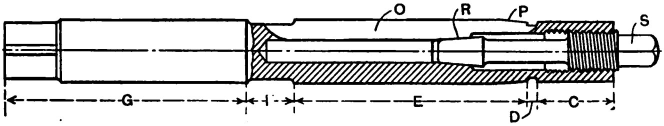

Fig. 253. Expansion Reamer

The body of the reamer is hollow and three slits are cut with a one-thirty-second-inch saw from the outside to the hole in the center. One of these slits is shown in the cut at *O*. The inside hole is tapered at *R*, and a tapered plug *S*, provided with a threaded part, serves as expander. The thread engages a threaded portion in the reamer guide, and, when the expander is turned so that the plug moves inward, the cutting edges of the reamer are forced outward on account of the taper at *R*, a slight spring action being possible because of the slits cut through the reamer body. The slits should extend into the neck and end at the upper end of the guide, as shown. They should be cut in the bottom of a flute, so as not to impair the cutting edges.

Reamers of this type cannot be recommended for accurate work. It is evident that the expansion takes place opposite the tapered part *R*, and that the cutting edge is sprung up in an arc. The reamer will have no parallel cutting edges, and, unless the guide fits the original hole closely, will hardly be able to ream straight.

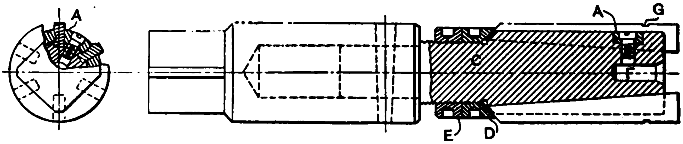

Fig. 254. Adjustable Hand Reamer with Inserted Blades

For cheaper grades of work, however, the feature of a simple means of expansion may be deemed valuable.

Adjustable Reamers with Inserted Blades. — There is a great number of designs possible for making an inserted-blade reamer adjustable. One of the best of these designs is shown in Fig. 254. The body and shank are made of ordinary machine steel, while the blades and the binders are made of tool steel. There has been a number of various designs of inserted-blade reamers on the market, but there are few which fill the requirements in all respects as well as the one presented here.

As seen from Fig. 254, the reamer consists of a body *C*, which has one end turned down to fit into a hole in the shank, six blades, and six binders *A*, and finally a binding nut *D* and a check nut *E*, which are mounted on the threaded part of the body. The end of the body, which is turned down to fit the hole in the shank, is driven into place and is secured by means of a taper pin. The body is slotted longitudinally to receive the blades and has a circular groove all around to receive the binders. The latter are held firmly to the shoulder *B* on the blades (see Fig. 256) by means of screws which are threaded into the body. The hole *F* shown extending in the center of the reamer a trifle beyond the center lines of the binding screws is for the purpose of providing clearance for the tap when tapping the screw holes. The blade is beveled off at an angle of 45 degrees at its upper end, and the binding nut is chamfered on the inside to correspond. This arrangement provides for a strong grip of the nut on the blades. The binders are made from a solid ring, being turned, chucked, reamed, and the screw holes drilled and counterbored before the ring is cut into pieces. The blades are ground cylindrical for a certain distance towards the point of the reamer. This cylindrical part serves as a guide in starting to ream. The remaining part of the blade from the neck *G* upwards is ground and relieved like an ordinary hand reamer.

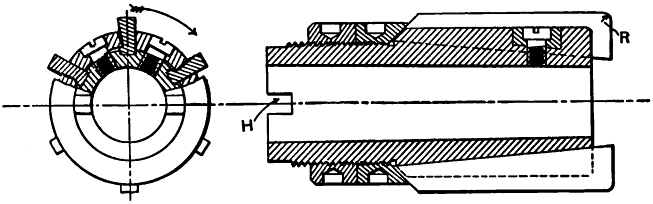

Fig. 255. Adjustable Shell Reamer with Inserted Blades

In Fig. 255 a shell reamer of the same design is shown. The hole is intended to receive a regular shell reamer arbor, and the reamer is driven by means of the key-way *H*. The blades of this reamer are shorter, are provided with a radius at the point like regular shell reamers, and are relieved all the way up and slightly back tapered. This back taper is equal to 0.012 inch per foot. The radius R at the end of the blade should be about one-sixteenth inch for sizes up to four inches diameter and one-eighth inch for larger sizes.

Requirements for an Inserted-blade Reamer. — The requirements for a good inserted-blade reamer are that the blades when bound in place shall be practically solid with the body, that the design shall permit a liberal adjustment in regard to size, that this adjustment shall be easily accomplished, and that the means employed for binding and adjusting the blades shall not be of such a kind as to prevent the use of the reamer in any case where a solid reamer could have been used. The design shown in the cuts fills all these requirements. When the binders A are tightened down against the shoulder B in the blade, and the nuts are screwed tightly up against the end of the blade, there is very little chance for the blade to move. The tapered bottom of the slots in the body of the reamer

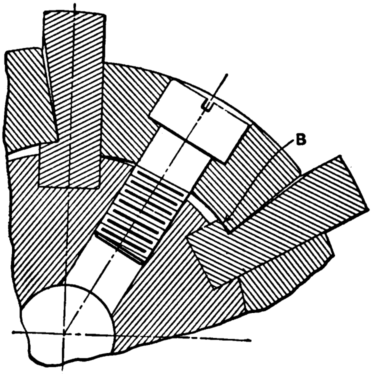

Fig. 256. Method of Securing Blades in Reamers shown in Figs. 254 and 255

TABLE CXXV.

ADJUSTABLE HAND REAMERS.

Diam. of Reamer	Length of Cutting Edge.	Thickness of Blade.	No. of Blades.	Total Length of Reamer	Diam. of Reamer	Length of Cutting Edge.	Thickness of Blade.	No. of Blades.	Total Length of Reamer
1 1/4	2 3/4	3/16	6	9	2 1/2	4	1/4	6	12 1/2
1 3/8	2 7/8	3/16	6	9 3/8	2 3/4	4 1/4	1/4	6	13
1 1/2	3	3/16	6	9 3/4	3	4 1/2	1/4	8	13 1/2
1 5/8	3 1/8	7/32	6	10 1/8	3 1/4	4 5/8	5/16	8	14
1 3/4	3 1/4	7/32	6	10 1/2	3 1/2	4 3/4	5/16	8	14 1/2
1 7/8	3 3/8	7/32	6	10 7/8	3 3/4	4 7/8	5/16	8	15
2	3 1/2	7/32	6	11 1/4	4	5	5/16	8	15 1/2
2 1/4	3 3/4	1/4	6	12	......	......	......	......	......

TABLE CXXVI.

ADJUSTABLE SHELL REAMERS.

Diam. of Reamer	Length of Cutting Edge.	Thickness of Blade.	No. of Blades.	Diam. of Reamer	Length of Cutting Edge.	Thickness of Blade.	No. of Blades.
1 1/4	1 5/8	3/16	6	3	3 1/4	1/4	8
1 3/8	1 3/4	3/16	6	3 1/4	3 1/2	5/16	8
1 1/2	1 7/8	3/16	6	3 1/2	3 3/4	5/16	8
1 5/8	2	7/32	6	3 3/4	4	5/16	8
1 3/4	2 1/8	7/32	6	4	4 1/4	5/16	8
1 7/8	2 1/4	7/32	6	4 1/4	4 1/2	5/16	10
2	2 3/8	7/32	6	4 1/2	4 3/4	5/16	10
2 1/4	2 1/2	1/4	6	4 3/4	4 7/8	3/8	10
2 1/2	2 3/4	1/4	6	5	5	3/8	10
2 3/4	3	1/4	6	......	......	......	......

into which the blades are fitted provides for the adjustment. When the reamer is worn, the binders are loosened and the nuts at the upper end of the blades screwed back. The blades can then be moved upward as far as is necessary for recovering the original size, the nuts and the binders are again tightened, and the reamer may be ground to the exact diameter required. The ease of accomplishing this adjustment is apparent. No details used either for binding or adjustment project outside of the reamer either at the end or at any place on the diameter of the body. The reamer cannot only pass entirely through a hole, but it can ream down to the bottom of a hole, and even to a certain width face the bottom if necessary. Very few reamers of the ordinary adjustable or expansion type fill all the requirements so well.

This must not be construed to mean that this is the only adjustable reamer possible which will fill the requirements outlined. There can, of course, be a great deal of variation in the design, but the one in question, although patented in one important detail, is chosen as an example because of embodying all the features which are of importance. It is manufactured by the Pratt and Whitney Company, Hartford, Conn.

Dimensions. — In order to give a general idea of the dimensions which should be followed in laying out any type of inserted-blade reamer Tables CXXV and CXXVI are appended. The dimensions given in these tables are not, of course, intended to be followed too strictly, as varying designs may require modifications. They will, however, serve as a guide in laying out adjustable reamers when occasionally required to be designed, and give an idea of the general proportions. The shank of inserted-blade hand reamers should be ground 0.002 inch smaller in diameter than the minimum size for which the reamer is intended.

CHAPTER XI.

DRILLS.—COUNTERBORES.—HOLLOW MILLS.—LATHE ARBORS.

Twist Drills.

While the varieties of drills used in shop work are many, at the present time the twist drill has so completely covered the field that it seems unnecessary to deal with any other class of drills for ordinary drilling. For deep-hole drilling, another kind of drills is, of course, required. Drills for this class of work will be treated later.

Twist drills one-quarter inch and larger are made with either straight or taper shanks, the latter being by far the more common. The taper of the shank is almost exclusively Morse standard. A short neck is provided between the fluted portion and the shank. The smaller sizes of drills, the wire-gauge sizes, are made with straight shank only, and have no neck. The shank and the body are of the same diameter, so that, in fact, on these small sizes the only difference between shank and body is the fluting of the latter. Drawn wire (drill rod) is used for all the wire-gauge sizes of drills, and no further finishing process is necessary for the outside. The small sizes are not ground nor are they backed off or relieved on the cylindrical portion, the only operations on them being the fluting, and the grinding and relieving of the cutting edges at the end.

FLUTING.

Number of Flutes or Grooves. — It is a well-known fact that at present all twist drills are made with two flutes, but twist drills having three or more flutes have been devised, made, and tried. The advantage gained by adding to the number of cutting edges has, however, not been great enough to justify the increased cost of manufacture. When there is added to this the weakness caused by the increased number of grooves, and the complicated operation of correctly grinding such drills, it is clear why drills having only two flutes have been and should be adopted.

Lead of Helix or Spiral. — The lead of the helix of the groove or flute is usually made about 7 × diameter of drill. When this lead is used, the cutters for twist-drill fluting as ordinarily manufactured will produce a straight cutting edge when the inclusive angle of the cutting point is 118 degrees, that is, when the cutting edge makes an angle of 59 degrees with the drill axis. With the advent of high-speed steel and higher cutting speeds it has been thought desirable to increase the lead somewhat, as the higher speed would tend to more speedily carry away the chips even if the helix, or spiral, as it is commonly called, is not of so acute an angle with the plane at right angles to the axis. But on the other hand the higher speed and, with high speed steel drills, the coarser feed would produce all the more chips to be carried away, that there is reasonable doubt whether the common angle of spiral is not the best one for all purposes. If, however, for some reason special drills are made for exceptionally slow speed, it is to be recommended that the lead be made only five or six times the diameter of the drill, so as to permit the chips to pass along faster in spite of the slow cutting speed.

Fluting Cutters. — Fluting cutters for twist drills are made of such a shape that the cutting edge of the drill becomes practically a straight line. In other words, the form of the cutter must be such that the intersection between the flute and a plane making a 59-degree angle with the axis of the drill, the angle to which twist drills are ground, will be a straight line. The cutter form is laid out approximately, as shown in Fig. 257. In the formulas in the cut, *d* signifies the diameter of the drill to be grooved. The width of the cutter is given in Table CXXVII. All other general dimensions of drill fluting cutters are also given in Table CXXVII for various diameters of drills. These cutters are usually made with eccentric relief, but may also be made with ordinary milling cutter teeth and ground by means of standard forms.

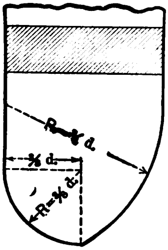

Fig. 257. Approximate Form of Drill Fluting Cutter

Increased Twist. — In order that a drill may have sufficient strength to resist the torsional strain to which it is subjected when in use, without being at the same time so thick at the point as to require a greater force than necessary to penetrate the work, it has long been customary, in shops where drills are manufactured, to make the grooves with gradually decreasing depth from the point to the shank. It is evident that simply receding with the cutter from the axis of the drill, in order to increase the thickness of the central portion, must produce grooves of a smaller area near the shank than the sectional area of the grooves at the point. If no means are employed to overcome this difficulty, there will be a tendency for the chips to clog in the grooves, which may result in injury to the work being done as well as to the drill.

TABLE CXXVII.

DIMENSIONS OF FLUTING CUTTERS FOR TWIST DRILLS.

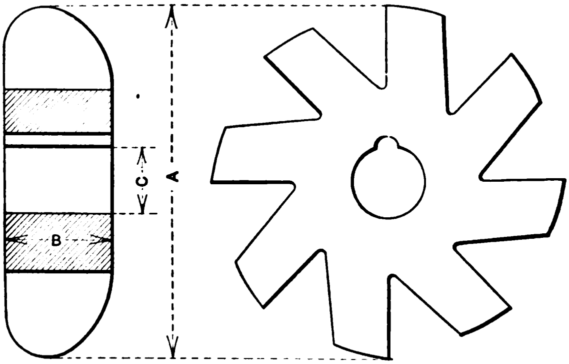

Fig. 258

Diam. of Drill.	*A*	*B*	*C*	Diam. of Drill.	*A*	*B*	*C*
3/8	2 3/16	0.286	15/16	1 1/8	2 3/4	0.850	1
7/16	2 1/4	0.350	15/16	1 1/4	3	0.933	1
1/2	2 3/8	0.396	1	1 3/8	3 1/2	1.036	1
9/16	2 3/8	0.428	1	1 1/2	3 1/2	1.135	1
5/8	2 3/8	0.475	1	1 5/8	3 1/2	1.229	1
11/16	2 3/8	0.517	1	1 3/4	3 1/2	1.320	1
3/4	2 1/2	0.585	1	1 7/8	3 3/4	1.402	1
13/16	2 1/2	0.615	1	2	3 3/4	1.508	1
7/8	2 1/2	0.667	1	2 1/4	4 1/4	1.701	1
15/16	2 1/2	0.704	1	2 1/2	4 1/2	1.888	1 1/4
1	2 3/4	0.770	1	2 3/4	4 3/4	2.070	1 1/4

In order to overcome this difficulty the Morse Twist Drill Company employs a method called "increased twist," in which the spiral angle of the groove gradually increases toward the shank end of the drill. This increase is obtained by changing the rate of forward traverse of the drill when grooving, meanwhile retaining the same amount of rotary motion of the drill. This, of course, will change the lead of the spiral, and the chips will move with a greater speed as they pass into the part of the groove which has a greater spiral angle than the angle at the point. This greater speed of the chips will eliminate the difficulty due to the smaller cross-sectional area of the groove.

Another method of overcoming the same difficulty is to gradually turn the cutter in relation to the axis of the drill when milling the grooves, the angle of spiral meanwhile remaining constant. This turning of the cutter causes a variation in the width of the groove, so that it is enough wider at the shank end to compensate for the loss in depth due to increasing the thickness of the central web. The same object may be obtained by milling the groove twice, the second time with a slightly different spiral, so that the cutter in the second cut slightly widens the groove milled in the first cut.

Fig. 259. Projection for Center at Pointed End of Twist Drills

The latter methods are preferable to the one of increased twist, because the cutting lip of the drill will not be impaired at any portion on the drill by changing the lead of the groove.

To obtain the necessary variation in depth of the groove, the spindle of the spiral head is slightly elevated, depending on the length of the flute to be milled. The elevation should be from one-half to 1 degree, the smaller value being used for flutes say 3 inches long, and the larger for flutes 12 to 15 inches long. The cutters for milling the grooves are right or left handed according to whether the milling is started at the point or at the shank end of the fluted portion.

In order to provide for a center in the pointed end of the drill, this end is made with a projection as shown in

Fig. 259. This projection is left until after the grinding operation. After the flutes have been cut and the drill ground to desired size, the projection may be ground off and the cutting lips ground to the proper shape.

THICKNESS OF WEB.

The thickness of the web or central portion of a twist drill is one of the most important features in the construction of these tools. Mr. Fairfield, of the Worcester Polytechnic Institute, during experiments which he has conducted for determining the thrust necessary to push a drill through a piece of metal in drilling, found that there was a great variation of the thrusts obtained from drills of the same diameter working apparently under the same conditions. This variation he found to depend upon the fact that the thickness of the web of the drills varied quite widely for the same diameter, even in drills manufactured by the same maker.

There is no reason, however, why there could not be given a common rule or formula for the thickness of the web. If we begin with a drill of 0 diameter and estimate a thickness of web of one-sixty-fourth inch for this imaginary size of drill, then the thickness of the web should increase one-sixty-fourth inch for every increase of one-eighth inch in the diameter of the drill.

Expressing this in a formula: If D is the diameter of the drill and W the thickness of the web, then

$$W = \frac{D}{8} + \frac{1}{64} \text{ inch.}$$

The thickness of web of ordinary sizes of twist drills figured from this formula is given in Table CXXVIII.

TABLE CXXVIII.

THICKNESS OF WEB AT POINT OF TWIST DRILLS.

Diam. of Drill.	Thickness of Web.	Diam. of Drill.	Thickness of Web.	Diam. of Drill.	Thickness of Web.
$\frac{1}{8}$	0.031	8	0.125	$1\frac{3}{4}$	0.234
$\frac{3}{16}$	0.039	$\frac{15}{16}$	0.133	$1\frac{7}{8}$	0.250
$\frac{1}{4}$	0.046	1	0.140	2	0.266
$\frac{5}{16}$	0.054	$1\frac{1}{16}$	0.148	$2\frac{1}{8}$	0.281
$\frac{3}{8}$	0.062	$1\frac{1}{8}$	0.156	$2\frac{1}{4}$	0.297
$\frac{7}{16}$	0.070	$1\frac{3}{16}$	0.164	$2\frac{3}{8}$	0.312
$\frac{1}{2}$	0.078	$1\frac{1}{4}$	0.171	$2\frac{1}{2}$	0.328
$\frac{9}{16}$	0.086	$1\frac{5}{16}$	0.179	$2\frac{5}{8}$	0.343
$\frac{5}{8}$	0.093	$1\frac{3}{8}$	0.187	$2\frac{3}{4}$	0.359
$\frac{11}{16}$	0.101	$1\frac{7}{16}$	0.195	$2\frac{7}{8}$	0.375
$\frac{3}{4}$	0.109	$1\frac{1}{2}$	0.203	3	0.390
$\frac{13}{16}$	0.117	$1\frac{5}{8}$	0.219	......	....

It is obvious that it is almost impossible, or at least very difficult, to measure the thickness of the web with an ordinary micrometer, owing to the circular form in the bottom of the grooves of the drill. For this reason a micrometer with the anvil as well as the point of the measuring screw rounded, as shown in Fig. 260, is employed. This micrometer may be made from a regular micrometer simply by removing the anvil and replacing it by one made as shown, and rounding the end of the measuring screw. As this micrometer will seldom be required to measure any more than say one-half inch, the point of the measuring screw, when rounded, can also be shortened enough so that when the two points *A* and *B* just touch one another the micrometer reading will be zero. This will save any figuring or subtraction when using the tool which would be necessary if, owing to the increased height of the anvil, the micrometer was not adjusted to the zero line when the point of the measuring screw was bearing on the point of the anvil.

RELIEVING THE LAND OF TWIST DRILLS.

In order to decrease the frictional resistance and prevent clogging of the chips the lands of the drill are relieved. This relief may be of two kinds, according to the method employed for carrying out the operation. The ordinary relief is shown in the end view, Fig. 261, and may be termed eccentric relief. The other kind leaves a short portion of the land intact, and the remaining part is milled down to a uniform depth as shown in Fig. 262.

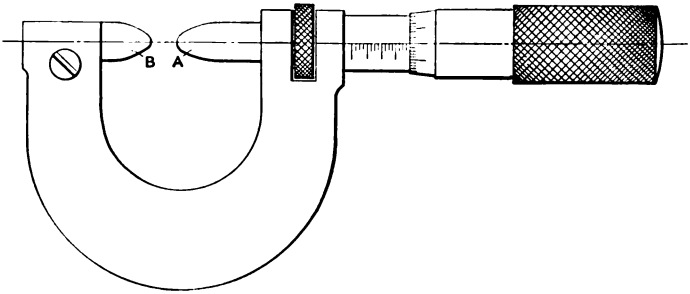

Fig. 260. Micrometer for Measuring Thickness of Web of Twist Drills

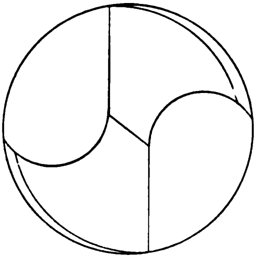

Fig. 261. Eccentric Relief of Drills

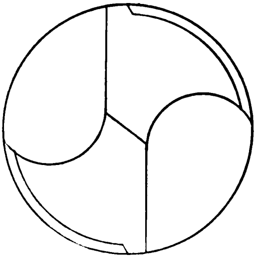

Fig. 262. Uniform Relief of Drills

Eccentric Relief. — In Fig. 263 is shown the method used for producing the first kind of relief referred to. In this method the relief is produced by the end of an ordinary end milling cutter. The milling-machine table is turned to an angle of say one-half to one degree, as for cutting a right-hand spiral; but as the angle depends on several conditions it will be necessary to determine what the effect will be under different circumstances. A study of Fig. 263 will be sufficient for this, by assuming the effect of different angles, mills, and pitches of spirals. The object of placing the bed at an angle is to cause the mill *F* to cut into the lip at *C′* and have it just touch it at *E′*. The line *R* being parallel with the face of the mill, the effect of the angular deviation of the bed is clearly shown at *A*.

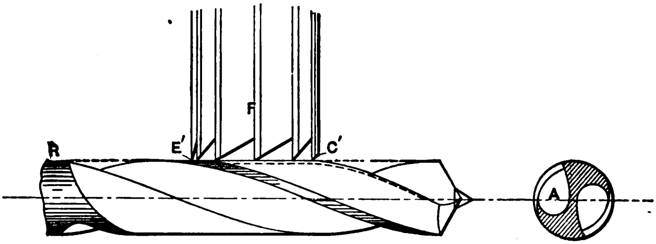

Fig. 263. Producing Eccentric Relief on Drills

While the drill has a positive traversing and relative movement, the edge of the mill at *E′* must always touch the lip a given distance from the front edge, this being the vanishing point. The other surface, forming the real diameter of the drill, is beyond the reach of the cutter, and is left to guide and steady it while in use. The point *E′*, Fig. 263, shows where the cutting commences and its increase until it reaches a maximum depth at *C′*, where it may be increased or diminished according to the angle employed in the operation.

Uniform Relief. — The class of relief referred to as uniform relief is produced as shown in Fig. 264. An angular cutter, is mounted on an arbor in a universal milling attachment, and as the drill moves forward and along its spiral path the cutter produces the relief shown in Fig. 262. The face of the cutter is parallel with the axis of the drill.

HARDENING TWIST DRILLS.

While the operation of hardening is, as has been previously mentioned, one which depends greatly upon the individual skill of the man performing the operation, it may be well to call attention to the principles involved in hardening a twist drill.

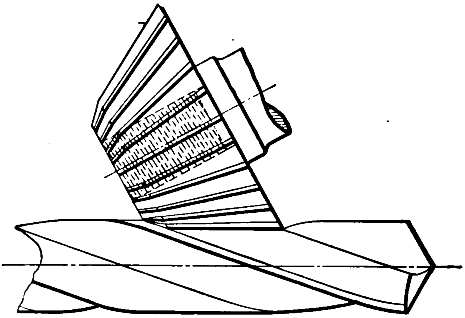

Fig. 264. Producing Uniform Relief on Twist Drills

The drill must be uniformly heated to the lowest temperature consistent with results desired. The various portions of the twist drill are of such unequal thickness that it is necessary to heat slowly or the lighter portions will be overheated before the heavier parts are sufficiently hot. Twist drills are subjected to great strains and should be as strong as possible; for this reason the heats should be the lowest possible. The shape of the lands of the drill is such that the steam formed by the contact of water with the red-hot steel prevents the water from getting into the flutes and properly hardening the portion at the bottom, and as this portion forms the point of the drill as it is ground back, it is necessary that it be hard. To overcome the tendency of the steam to force the water from the grooves a bath should be used which will insure the water reaching the bottom of the flutes. Such a bath is shown in Fig. 265. It has a jet of water coming up from the bottom, and also has perforated pipes coming up on the sides by means of which water is projected against all sides of the drill and to the bottoms of the grooves, thus insuring their hardening.

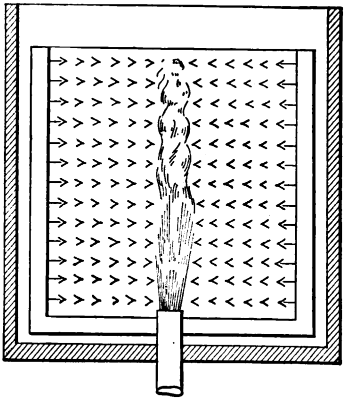

Fig. 265. **Hardening Bath for Twist Drills**

The drill should be heated in a tube to prevent the fire coming in contact with the steel, unless we are using a muffle furnace or some form where the steel is not exposed to the action of the fire or the air. A crucible with red-hot lead furnishes a satisfactory means of heating drills, provided precaution is used to prevent the lead sticking to the drill. The following solution not only prevents the lead sticking, but as it is of a carbonaceous nature it increases, in a measure, the surface hardness:

Pulverized charred leather	1 pound
Fine flour	1½ pounds
Fine table salt	2 pounds

The charred leather should be pulverized very fine; in fact it should be sifted through a No. 45 sieve. The three ingredients should be thoroughly mixed while in the dry state, then water should be added slowly to prevent lumps, enough water being used to bring the mixture to the consistency of varnish.

The drill may be dipped in the mixture and set in a warm place to dry, as it is never safe to immerse anything that is damp in red-hot lead, the presence of moisture causing the lead to fly, endangering the eyes of the operator.

When the drill is uniformly heated it is immersed in the hardening bath and after hardening the temper may be drawn. The amount necessary to draw the temper depends on the heat given the steel when it was hardened and the use to which the drill is to be put, although for most work the temper should be drawn to 430° F.

GRINDING.

The cylindrical surface of twist drills is ground with a back taper of 0.005 inch per foot, that is, the point of the drill is larger in diameter than the body back of it. This prevents binding in the drilled hole. The cutting edges are ground to an angle of 59 degrees with the center line of the drill, as shown in Fig. 266, when standard fluting cutters are used for grooving. This angle, however, is not necessarily the best one for the point of the drill, as Mr. Fairfield in his tests with several angles, varying from 37½ to 70

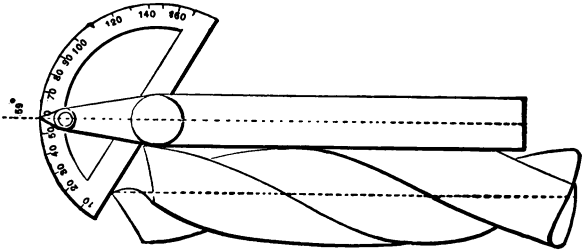

Fig. 266. Gauging Angle of Cutting Edges of Twist Drills

degrees, shows that the 59-degree angle is not the most desirable one. In fact, with different angles of the lip with the center line the thrust necessary to push the drill through a piece of metal decreases from 70 degrees all the way to 45 degrees, and then increases for any further decrease in the angle. From this it appears that a 45-degree angle would give the best results for practical machine-shop work. There is, however, perhaps only one firm in the country which gives the 45-degree angle the preference over the common angle of 59 degrees, and that is the William Sellers Company, Philadelphia, Pa.

It must be remembered, however, that a change in the lip angle from 59 to 45 degrees would necessarily have to be followed by a change in the form of standard fluting cutters, as otherwise the cutting edge would not be straight but hooked.

FACTORS DETERMINING THE KEENNESS AND DURABILITY OF THE CUTTING EDGE.

The keenness and durability of the cutting edge depend upon three main factors, viz.: (1) the clearance given to the cutting edge by grinding; (2) the angle of one cutting edge to the other; and (3) the degree of twist of the groove, *i.e.*, the lead.

It is obvious that the speed of the various points of the cutting edge is different according to the distance from the center; hence the cutting point at the corner operates at the highest rate of cutting speed and thus performs the heaviest duty. Therefore the angle of clearance should be so selected that this corner is given the most desirable angle for durability. The keenness of the corner also depends upon the angle of the cutting edges with the center line, which, as mentioned, while usually made 59 degrees, is by actual tests proven to possess greater cutting ability if made 45 degrees. For brass, in particular, an angle of 45 degrees is without any doubt far superior to the blunter angle common for drills. The degree of twist or spiral of the groove which has proven to best fill all requirements is, as mentioned before, the one having a lead of 7 × the diameter of drill.

DIMENSIONS.

In Tables CXXIX and CXXX are given the essential dimensions for twist drills. They are calculated to give a uniform increase in dimensions for the increasing sizes of drills. The dimensions given and for which formulas are provided are the total length and the length of the grooved portion. For the sake of uniformity in regard to the total lengths, taper-shank and straight-shank drills ought to have the same dimensions. As the length of the taper shank must always be some "standard" (usually and preferably Morse standard taper), formulas are not given for the lengths of grooved parts on taper-shank drills, as these lengths will, when the total length is given, depend entirely upon the length of the standard taper used. It is obvious that after the length of the taper shank is deducted from the total length, the remaining portion will be grooved as far up towards the taper-shank as practicable. For straight-shank drills, however, a formula is given which provides for well-proportioned lengths of shank and grooved portion.

As the angle of helix of a twist drill is one of the most important factors influencing its cutting qualities, the lead must be chosen so as to give a proper angle between the direction of the groove and the center line of the drill. This angle will be 24° 10′ if the lead already stated

($7 \times$ diameter of drill) is used. It is obvious that every lead given in the table cannot be obtained on every universal milling machine, but in cases where this trouble is met with it is preferable to use the nearest larger lead for drills made of some kind of high-speed steel, and the nearest lower lead for drills that are made of common tool steel.

As Morse standard taper shanks are the most commonly used on drills, a column is given in the table showing for what size drills different sizes of Morse tapers should be used. Taper shanks are not used on any drills smaller than one-quarter inch diameter.

Dimensions given in Tables CXXIX and CXXX are figured from the formulas, and when the result is an uneven fraction of an inch it is given in the nearest sixteenth.

L = total length.
G = length of grooved part.
D = diameter of drill.
S = lead.

For the total length:

1. From 3 inches diameter to $2\frac{1}{16}$ inches diameter,

$$L = 4 \times D + 9 \text{ inches.}$$

2. From 2 inches diameter to $\frac{1}{4}$ inch diameter.

$$L = 6 \times D + 5 \text{ inches.}$$

3. From No. 1 to No. 40 steel wire gauge,

$$L = 11 \times D + 1\frac{1}{2} \text{ inches.}$$

4. From No. 41 to No. 60 steel wire gauge,

$$L = 12 \times D + 1\frac{3}{16} \text{ inches.}$$

TABLE CXXIX.

MAIN DIMENSIONS OF TWIST DRILLS.

Diameter.	Total Length.	Length of Groove on Straight-shank Drills.	No. of Morse Taper on Morse Taper Shank Drills.	Lead of Grooves.
1/4	6 1/2	4 1/8	1	1 3/4
5/16	6 7/8	4 3/8	1	2 3/16
3/8	7 1/4	4 11/16	1	2 5/8
7/16	7 5/8	4 15/16	1	3 1/16
1/2	8	5 1/4	1	3 1/2
9/16	8 3/8	5 1/2	1	3 15/16
5/8	8 3/4	5 13/16	2	4 3/8
11/16	9 1/8	6 1/16	2	4 13/16
3/4	9 1/2	6 3/8	2	5 1/4
13/16	9 7/8	6 5/8	2	5 11/16
7/8	10 1/4	6 15/16	2	6 1/8
15/16	10 5/8	7 3/16	3	6 9/16
1	11	7 1/2	3	7
1 1/16	11 3/8	7 3/4	3	7 7/16
1 1/8	11 3/4	8 1/16	3	7 7/8
1 3/16	12 1/8	8 3/8	3	8 5/16
1 1/4	12 1/2	8 5/8	3	8 3/4
1 5/16	12 7/8	8 15/16	4	9 3/16
1 3/8	13 1/4	9 3/16	4	9 5/8
1 7/16	13 5/8	9 1/2	4	10 1/16
1 1/2	14	9 3/4	4	10 1/2
1 9/16	14 3/8	10 1/16	4	10 15/16
1 5/8	14 3/4	10 5/16	4	11 3/8
1 11/16	15 1/8	10 5/8	4	11 13/16
1 3/4	15 1/2	10 7/8	4	12 1/4
1 13/16	15 7/8	11 3/16	4	12 11/16
1 7/8	16 1/4	11 7/16	4	13 1/8
1 15/16	16 5/8	11 3/4	4	13 9/16
2	17	12	4	14
2 1/16	17 1/4	12 3/16	5	14 7/16
2 1/8	17 1/2	12 3/8	5	14 7/8
2 3/16	17 3/4	12 9/16	5	15 5/16
2 1/4	18	12 3/4	5	15 3/4
2 5/16	18 1/4	12 15/16	5	16 3/16
2 3/8	18 1/2	13 1/8	5	16 5/8
2 7/16	18 3/4	13 5/16	5	17 1/16
2 1/2	19	13 1/2	5	17 1/2
2 9/16	19 1/4	13 11/16	5	17 15/16
2 5/8	19 1/2	13 7/8	5	18 3/8
2 11/16	19 3/4	14 1/16	5	18 13/16
2 3/4	20	14 1/4	5	19 1/4
2 13/16	20 1/4	14 7/16	5	19 11/16
2 7/8	20 1/2	14 5/8	5	20 1/8
2 15/16	20 3/4	14 13/16	5	20 9/16
3	21	15	5	21

For the length of grooved part:

1. From 3 inches diameter to $2\frac{1}{16}$ inches diameter,

$$G = 3 \times D + 6 \text{ inches.}$$

2. From 2 inches diameter to $\frac{1}{4}$ inch diameter,

$$G = 4\frac{1}{2} \times D + 3 \text{ inches.}$$

3. From No. 1 to No. 40 steel wire gauge,

$$G = 11 \times D + \frac{1}{4} \text{ inch.}$$

4. From No. 41 to No. 60 steel wire gauge,

$$G = 10 \times D + \frac{1}{4} \text{ inch.}$$

TABLE CXXX.

MAIN DIMENSIONS, WIRE GAUGE SIZES, TWIST DRILLS.

No. of Steel Wire Gauge.	Diameter in Inches.	Total Length.	Length of Groove.	Lead of Grooves.
1	.2280	4	$2\frac{3}{4}$	$1\frac{5}{8}$
2	.2210	$3\frac{15}{16}$	$2\frac{11}{16}$	$1\frac{9}{16}$
3	.2130	$3\frac{7}{8}$	$2\frac{5}{8}$	$1\frac{1}{2}$
4	.2090	$3\frac{13}{16}$	$2\frac{9}{16}$	$1\frac{7}{16}$
5	.2055	$3\frac{3}{4}$	$2\frac{1}{2}$	$1\frac{7}{16}$
6	.2040	$3\frac{3}{4}$	$2\frac{1}{2}$	$1\frac{7}{16}$
7	.2010	$3\frac{3}{4}$	$2\frac{1}{2}$	$1\frac{7}{16}$
8	.1990	$3\frac{11}{16}$	$2\frac{7}{16}$	$1\frac{3}{8}$
9	.1960	$3\frac{11}{16}$	$2\frac{7}{16}$	$1\frac{3}{8}$
10	.1935	$3\frac{5}{8}$	$2\frac{3}{8}$	$1\frac{3}{8}$
11	.1910	$3\frac{5}{8}$	$2\frac{3}{8}$	$1\frac{5}{16}$
12	.1890	$3\frac{9}{16}$	$2\frac{5}{16}$	$1\frac{5}{16}$
13	.1850	$3\frac{9}{16}$	$2\frac{5}{16}$	$1\frac{5}{16}$
14	.1820	$3\frac{1}{2}$	$2\frac{1}{4}$	$1\frac{1}{4}$
15	.1800	$3\frac{1}{2}$	$2\frac{1}{4}$	$1\frac{1}{4}$
16	.1770	$3\frac{7}{16}$	$2\frac{3}{16}$	$1\frac{1}{4}$
17	.1730	$3\frac{3}{8}$	$2\frac{1}{8}$	$1\frac{3}{16}$
18	.1695	$3\frac{3}{8}$	$2\frac{1}{8}$	$1\frac{3}{16}$
19	.1660	$3\frac{5}{16}$	$2\frac{1}{16}$	$1\frac{3}{16}$
20	.1610	$3\frac{1}{4}$	2	$1\frac{1}{8}$
21	.1590	$3\frac{1}{4}$	2	$1\frac{1}{8}$
22	.1570	$3\frac{1}{4}$	2	$1\frac{1}{8}$
23	.1540	$3\frac{3}{16}$	$1\frac{15}{16}$	$1\frac{1}{16}$
24	.1520	$3\frac{3}{16}$	$1\frac{15}{16}$	$1\frac{1}{16}$
25	.1495	$3\frac{1}{8}$	$1\frac{7}{8}$	$1\frac{1}{16}$
26	.1470	$3\frac{1}{8}$	$1\frac{7}{8}$	1
27	.1440	$3\frac{1}{16}$	$1\frac{13}{16}$	1
28	.1405	$3\frac{1}{16}$	$1\frac{13}{16}$	1
29	.1360	3	$1\frac{3}{4}$	$\frac{15}{16}$

TABLE CXXX. — *Continued.*

No. of Steel Wire Gauge.	Diameter in Inches.	Total Length.	Length of Groove.	Lead of Groove.
30	.1285	$2\frac{15}{16}$	$1\frac{11}{16}$	$\frac{7}{8}$
31	.1200	$2\frac{13}{16}$	$1\frac{9}{16}$	$\frac{13}{16}$
32	.1160	$2\frac{3}{4}$	$1\frac{1}{2}$	$\frac{13}{16}$
33	.1130	$2\frac{3}{4}$	$1\frac{1}{2}$	$\frac{13}{16}$
34	.1110	$2\frac{3}{4}$	$1\frac{1}{2}$	$\frac{3}{4}$
35	.1100	$2\frac{11}{16}$	$1\frac{7}{16}$	$\frac{3}{4}$
36	.1065	$2\frac{11}{16}$	$1\frac{7}{16}$	$\frac{3}{4}$
37	.1040	$2\frac{5}{8}$	$1\frac{3}{8}$	$\frac{3}{4}$
38	.1015	$2\frac{5}{8}$	$1\frac{3}{8}$	$\frac{11}{16}$
39	.0995	$2\frac{9}{16}$	$1\frac{5}{16}$	$\frac{11}{16}$
40	.0980	$2\frac{9}{16}$	$1\frac{5}{16}$	$\frac{11}{16}$
41	.0960	$2\frac{3}{8}$	$1\frac{3}{16}$	$\frac{11}{16}$
42	.0935	$2\frac{5}{16}$	$1\frac{3}{16}$	$\frac{5}{8}$
43	.0890	$2\frac{1}{4}$	$1\frac{1}{8}$	$\frac{5}{8}$
44	.0860	$2\frac{1}{4}$	$1\frac{1}{8}$	$\frac{5}{8}$
45	.0820	$2\frac{3}{16}$	$1\frac{1}{16}$	$\frac{9}{16}$
46	.0810	$2\frac{3}{16}$	$1\frac{1}{16}$	$\frac{9}{16}$
47	.0785	$2\frac{1}{8}$	$1\frac{1}{16}$	$\frac{9}{16}$
48	.0760	$2\frac{1}{8}$	1	$\frac{9}{16}$
49	.0730	$2\frac{1}{16}$	1	$\frac{1}{2}$
50	.0700	2	$\frac{15}{16}$	$\frac{1}{2}$
51	.0670	2	$\frac{15}{16}$	$\frac{1}{2}$
52	.0635	$1\frac{15}{16}$	$\frac{7}{8}$	$\frac{7}{16}$
53	.0595	$1\frac{7}{8}$	$\frac{7}{8}$	$\frac{7}{16}$
54	.0550	$1\frac{7}{8}$	$\frac{13}{16}$	$\frac{3}{8}$
55	.0520	$1\frac{13}{16}$	$\frac{3}{4}$	$\frac{3}{8}$
56	.0465	$1\frac{3}{4}$	$\frac{11}{16}$	$\frac{5}{16}$
57	.0430	$1\frac{11}{16}$	$\frac{11}{16}$	$\frac{5}{16}$
58	.0420	$1\frac{11}{16}$	$\frac{11}{16}$	$\frac{5}{16}$
59	.0410	$1\frac{11}{16}$	$\frac{11}{16}$	$\frac{5}{16}$
60	.0400	$1\frac{11}{16}$	$\frac{5}{8}$	$\frac{5}{16}$

THE DRILLING OF DEEP HOLES.

Principles Involved in Deep-hole Drilling. — The difficulties to be overcome in producing deep drilled holes can be classified in three groups. In the first place, the drill has a great tendency to run out, thus producing a hole that is neither straight nor uniform in diameter; in the second place, great difficulties are encountered in trying to remove the chips in a satisfactory manner; and in the third place, the heating of the cutting tool is difficult to prevent.

The principle involved in common drill presses where the drill is given a rotary motion simultaneously with the forward motion for feeding is the one least adapted to produce a straight and true hole. Better results are obtained by giving only a rotary motion to the drill and feeding the work toward it. It has been found, however, that for drilling deep holes the reversal of this, that is, imparting a rotary motion to the work and the feed motion to the drill will answer the purpose still better. It seems as if there could be no material difference between the latter two methods. An analysis of the conditions involved will show, however, that there is a decided difference in the action of the drill. If the drill rotates and the work is fed forward as shown to the left in Fig. 267,

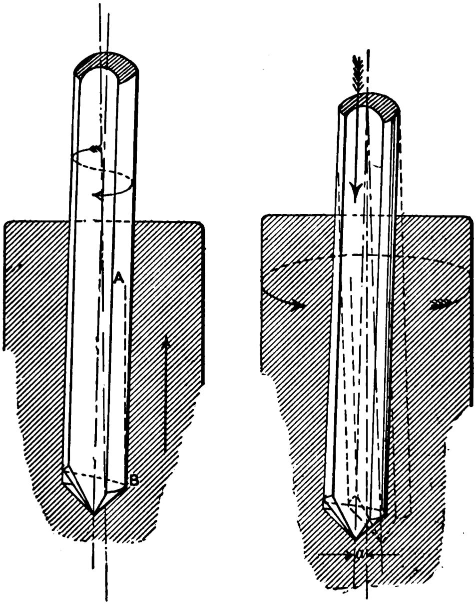

Fig. 267. Analysis of Action when Drill and when Work Revolves

the drill when deviating from its true course will be caused to continue to deviate still more by the wedge action of the part *B*, which tends to move in the direction *BA* when the work is fed forward. In the case of the work rotating and the drill being fed forward, as shown to the right in the cut, the point of the drill when not running true will be carried around by the work in a circle with the radius *a*, thus tending to bend the drill in various directions. The drill is by this action forced back into the course of "least resistance," as it is evident that the bending action being exerted on the drill in all directions will tend to carry the point back to the axis of the work where no bending action will appear. The chips, as is well known, are carried off by forcing a fluid into the hole, which upon its return carries the chips with it. This fluid being oil will serve the double purpose of carrying away the chips and lubricating the cutting tool, keeping it at a normal temperature.

Example of Drill Used for Deep-hole Drilling. — The drills used for deep-hole drilling are of entirely different construction from ordinary drills. One drill which has been developed by the Lodge and Shipley Machine Tool Company, Cincinnati, Ohio, is shown in Fig. 268. This drill is manufactured by the Three Rivers Tool Company, Three Rivers, Mich., and was described by Mr. Frank B. Kleinhans in *Machinery*, January, 1904.
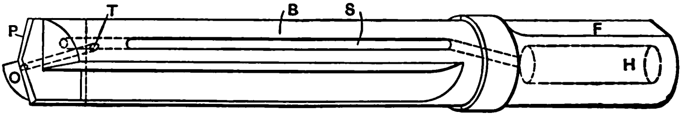
Fig. 268. Lodge & Shipley Deep-Hole Drill

Referring to the cut, Fig. 268, the body of the drill *B* is made of machine steel. The point *P* is made of tool steel and held in position by the taper pin *T*. A hole *H* is drilled in the shank, and from this hole the oil is led to slots *S*, which are milled along the outside. These slots run the full length of the drill, and then shoot down at the ends as indicated. *F* is a flat milled in the shank for the set screw holding the drill when in use.

A longitudinal sectional view of this drill is shown in Fig. 269, in which the construction of the passageway for the oil is better seen. *H* is the inlet hole for the oil, as mentioned, and the two smaller holes *J*, *J*, are drilled to connect with hole *H* in the manner indicated. The holes *K*, *K*, are drilled in a similar manner at the other end of the drill, and a piece of brass tube is bent to an arc and the ends entered into the holes *J* and *K*. It is then hammered down into place, and the joint is flushed with solder. The slot *P* is milled with a convex cutter so as to have a semicircular bottom, and the cutter of the drill is fitted to this slot. The drill points should preferably be made of high-speed steel, as they then stand up better under high speed. They are made as shown in Fig. 270. The hole *H* is reamed through the drill, while the cutter is clamped firmly back against its seat at the end of the slot. The angle *A* is made about 20 degrees. The cutting edge is nicked at several places, as at *N*, in order to break up the chips, this being done on the corner of an emery wheel. After the drill is put into place it is ground up accurately to the diameter, *D*.

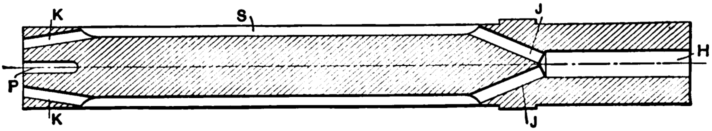

Fig. 269. Section of Deep-Hole Drill shown in Fig. 268

Classes of Deep-hole Drills. — According to the manner in which deep-hole drills perform their work, a difference is made between those which cut out all the metal of the hole and those which only cut out a ring, leaving a core in the center. When drilling with this latter class of drills a great amount of energy is saved, inasmuch as there is less metal removed; the method, however, is not generally used for holes smaller than 3 inches in diameter. The core which is cut out does not necessarily become scrap, as in most cases it can be used for various purposes. Several cutting edges must be provided, and care must be taken to see that they all take an equal cut, as otherwise there will be a tendency for the drill to deviate from its true course.

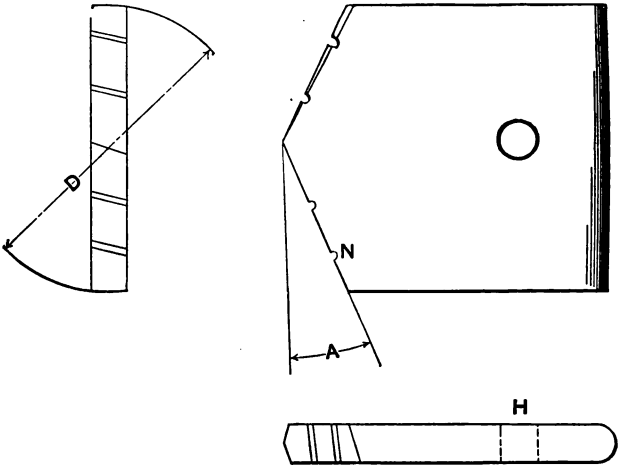

Fig. 270. High Speed Steel Cutter used in the Drill in Fig. 268

COUNTERBORES.

Counterbores are used for enlarging holes which are already drilled, without changing their location. The tool consists of a body part, the end of which performs the cutting; a guide, which must accurately fit the hole already drilled; and a straight or taper shank, by which the counterbore is held while in operation. The size of the body part must be the same as the diameter of the enlarged hole desired. The cutting edges are perpendicular to the axis of the hole, so as to form a step with *flat* bottom when the counterboring operation is performed. When the cutting edges form an angle with the axis, so as to give the enlarged hole inclined or beveled sides, the tool is not termed a counterbore but a countersink.

The ordinary form of counterbore is shown in Fig. 271. Between the body and the shank there is a long necked-down portion, permitting the tool to be used in deep holes.

Counterbores for screw holes are generally made in sets.

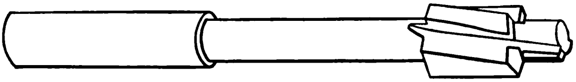

Fig. 271. Ordinary Form of Counterbore

Each set contains three counterbores: one with the body the size of the screw head and the pilot the size of the hole to admit the body of screw; one with body the size of head of screw and the pilot the size of tap drill; and the third with the body the size of body of screw and the pilot the size of tap drill.

Fluting. — The making of counterbores presents but few items which have not already been treated in connection with other tools. They are usually provided with four flutes, which as a rule are cut on a right-hand spiral. This gives a certain amount of front rake to the cutting edge, and is particularly preferable for all tools cutting steel. But if the counterbore is to be used mostly for brass it is better not to have any front rake, and the flutes are consequently cut straight. When the tool is provided with spiral flutes the angle of the flute with the center line of the counterbore should be made about 15 degrees, which corresponds to a lead of the flute equal to 12 × diameter of body of counterbore. While for most purposes counterbores are made with four cutting edges, small counterbores are often made with three, but unless the sizes are plainly stamped on them it is difficult to determine their size by measurement. Counterbores fluted in this manner should be marked before fluting.

The flutes should be cut deep enough to come below the surface of the pilot, so that the body of the counterbore gets a perfect cutting edge for its full width of the shoulder formed by turning down for the guide.

Relief. — The counterbore should be relieved on the end of the body only and not on the cylindrical surface, as all cutting is done at the end. In order to facilitate the relieving process, a small neck should be turned between the guide and the body, immediately at the end of the body. The relief is given to the cutting edges by filing when only small quantities are made, but in manufacturing these tools special machines are used, rigged up for relieving the cutting edges either by means of an ordinary tool pulled back at regular intervals or by means of a small milling cutter placed in a head on the carriage of a lathe with a universal relieving attachment. The amount of clearance given the cutting edges depends somewhat on the nature of the work to be done, but for general work an angle of 4 or 5 degrees will be found satisfactory.

Grinding. — All tools which are held by their shanks when used, must be ground after hardening in order to insure that the body will run true with the shank. It is customary to grind the shanks first, as placing a dog on the finished ground surface of the cutting part of the tool should as far as possible be avoided. Besides, if the shank has sprung out of true in hardening, there is a better opportunity when grinding so long a surface as that of the shank, to set the machine so that it will grind the whole tool true than there would be if one tried to set it to grind correct from the body or pilot.

Straightening Counterbores. — When counterbores and similar tools, such as taps and reamers, spring in hardening it is possible to straighten them by applying pressure on the convex side, the tool having been previously slightly heated. The pressure may be applied, as shown in Fig. 272, by a tool or piece of steel held in the tool-post of a lathe and forced against the work by means of the cross-feed screw. The piece must be forced a trifle beyond the straight line, as it will spring back when the pressure ceases to be applied.

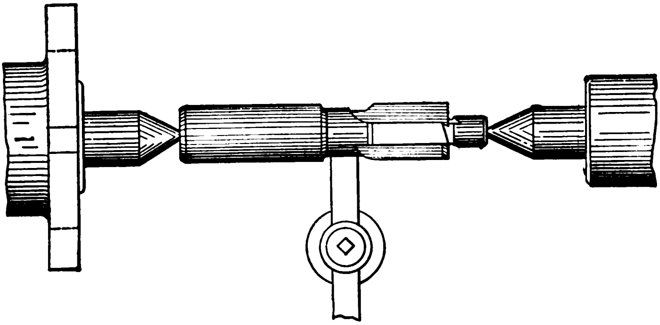

Fig. 272. Method of Straightening Counterbores in Lathe

In the manufacture of tools where a great number of pieces are to be straightened special "straightening lathes" are employed, in which the pressure comes from below, getting its support on the lathe bed. The principle, however, remains the same as the one shown in Fig. 272.

Dimensions of Counterbores. — In Table CXXXI are given the dimensions for counterbores. Referring to Fig. 273, the dimensions have been given in relation to the

TABLE CXXXI.

DIMENSIONS OF COUNTERBORES.

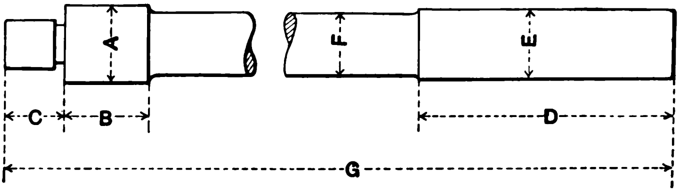

Fig. 273

A	*B*	*C*	*D*	*E*	*F*	*G*
1/4	11/32	3/16	2 1/2	1/4	7/32	4 7/8
5/16	13/32	15/64	2 9/16	5/16	9/32	5 5/16
3/8	1/2	9/32	2 5/8	3/8	11/32	5 3/4
7/16	19/32	21/64	2 11/16	7/16	13/32	6 3/16
1/2	21/32	3/8	2 3/4	1/2	15/32	6 5/8
9/16	3/4	27/64	2 13/16	9/16	17/32	7 1/16
5/8	27/32	15/32	2 7/8	5/8	19/32	7 1/2
11/16	29/32	33/64	2 15/16	11/16	21/32	7 15/16
3/4	1	9/16	3	3/4	23/32	8 3/8
13/16	1 3/32	39/64	3 1/16	13/16	25/32	8 13/16
7/8	1 5/32	21/32	3 1/8	7/8	27/32	9 1/4
15/16	1 1/4	45/64	3 3/16	15/16	29/32	9 11/16
1	1 11/32	3/4	3 1/4	1	31/32	10 1/8
1 1/16	1 13/32	51/64	3 5/16	1 1/16	1 1/32	10 9/16
1 1/8	1 1/2	27/32	3 3/8	1 1/8	1 3/32	11
1 3/16	1 19/32	57/64	3 7/16	1 3/16	1 5/32	11 7/16
1 1/4	1 21/32	15/16	3 1/2	1 1/4	1 7/32	11 7/8
1 5/16	1 3/4	63/64	3 9/16	1 5/16	1 9/32	12 5/16
1 3/8	1 27/32	1 1/32	3 5/8	1 3/8	1 11/32	12 3/4
1 7/16	1 29/32	1 5/64	3 11/16	1 7/16	1 13/32	13 3/16
1 1/2	2	1 1/8	3 3/4	1 1/2	1 7/16	13 3/8
1 5/8	2 3/32	1 7/32	3 15/16	1 17/32	1 15/32	13 3/4
1 3/4	2 3/16	1 5/16	4 1/8	1 19/32	1 17/32	14 1/8
1 7/8	2 9/32	1 13/32	4 5/16	1 5/8	1 9/16	14 1/2
2	2 3/8	1 1/2	4 1/2	1 21/32	1 19/32	14 7/8
2 1/8	2 15/32	1 19/32	4 11/16	1 23/32	1 21/32	15 1/4
2 1/4	2 9/16	1 11/16	4 7/8	1 3/4	1 11/16	15 5/8
2 3/8	2 21/32	1 25/32	5 1/16	1 25/32	1 23/32	16
2 1/2	2 3/4	1 7/8	5 1/4	1 27/32	1 25/32	16 3/8
2 5/8	2 27/32	1 31/32	5 7/16	1 7/8	1 13/16	16 3/4
2 3/4	2 15/16	2 1/16	5 5/8	1 29/32	1 27/32	17 1/8
2 7/8	3 1/32	2 5/32	5 13/16	1 31/32	1 29/32	17 1/2
3	3 1/8	2 1/4	6	2	1 15/16	17 7/8

diameter of the body of the counterbore A. As counterbores are used with straight shanks as well as with taper shanks, the simplest and most universal way of making up formulas as well as table will be to do so with reference to straight-shank counterbores only; but as there is no reason for making the total lengths different for counterbores with straight or taper shanks, the formulas will also hold good for counterbores with taper shanks of reasonable proportions, as will also the dimensions for B and C. As the Morse standard taper shanks are more used than any other standard taper shanks, below is given an auxiliary table giving the numbers of Morse taper shanks that ought to be used with certain size counterbores.

Diameter of Body, Inches.	No. of Morse Taper.
$\frac{1}{4}$–$\frac{1}{2}$	1
$\frac{9}{16}$–$\frac{7}{8}$	2
$\frac{15}{16}$–$1\frac{3}{8}$	3
$1\frac{7}{16}$–2	4
$2\frac{1}{16}$–3	5

In the following formulas,

A = diameter of body,
B = length of body,
C = length of guide,
D = length of shank,
E = diameter of shank,
F = diameter of neck,
G = total length.

For counterbores from one-quarter to $1\frac{7}{16}$ inches the following formulas should be used:

$$B = \frac{4A}{3}. \qquad E = A.$$

$$C = \frac{3A}{4}. \qquad F = A - \tfrac{1}{32}.$$

$$D = A + 2\tfrac{1}{4}. \qquad G = 7A + 3\tfrac{1}{8}.$$

For counterbores from $1\frac{1}{2}$ to 3 inches the following formulas should be used:

$$B = \frac{3A}{4} + \frac{7}{8}. \qquad E = \frac{A}{3} + 1.$$

$$C = \frac{3A}{4}. \qquad F = \frac{A}{3} + \frac{15}{16}.$$

$$D = \frac{3A}{2} + 1\frac{1}{2}. \qquad G = 3A + 8\frac{7}{8}.$$

COUNTERBORES WITH INSERTED PILOTS.

The range of work possible with a counterbore is sometimes greatly increased by having pilots of various sizes which may be inserted as occasion requires. In Fig. 274 is shown a counterbore designed to take pilots of different sizes. This form of counterbore is oftentimes used where it is necessary to sharpen quite often, as the pilot may be removed and the teeth ground on their ends. If the teeth are ground on a universal grinding machine they can be kept very straight and square. After grinding, the pilot may be again inserted, and the tool is ready for use.

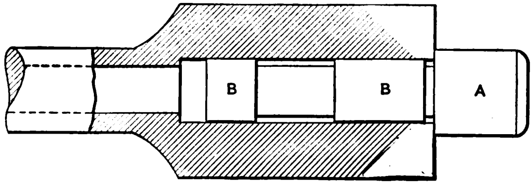

Fig. 274. Inserted Pilot Counterbore

The teeth in this class of counterbores are usually cut as indicated in Fig. 274, that is, the body is not provided with flutes the full length, but cut on the end only. This is necessary in order to strengthen the tool as much as possible. It is evident that being provided with a hole for the pilot the strength of the tool would be seriously impaired if it had flutes running the full length of the body.

COUNTERBORES WITH INTERCHANGEABLE BODIES AND GUIDES.

Object of Built-up Tools. — The efforts constantly made by progressive manufacturers to decrease the cost of tools without impairing their efficiency have resulted in the design of a number of holders for cutting tools which permit a cheaper grade of material to be used in the holder proper, while the best-quality steel can be used for the cutting tool itself. A further impetus to these efforts has been given by the extensive use of high-speed steel, the price of which is so high as to make its use for many purposes prohibitive if the whole tool should be manufactured throughout of this material. Many tools which only a few years ago were almost invariably made solid are therefore to-day made up in several parts, the portion which performs the cutting being the only one made out of high-grade material. Incidentally another advantage is also gained. Inasmuch as the cutting portion of a tool is the only one which, in general, when worn, has caused the tool to be discarded, it is now possible to retain all the other parts and replace the cutting portion only.

Examples of Built-up Counterbores. — The accompanying cuts show a number of counterbores with interchangeable bodies and guides. In the case of counterbores the interchangeability is even of greater advantage than in many other tools, inasmuch as here a number of guides can be used with the same body, and *vice versa,* thus making it possible to replace a very large collection of solid counterbores with a single holder and a few bodies and guides.

Fig. 275 shows a counterbore where the body consists simply of a blade A inserted in a slot B in the holder. The blade rests upon a hardened tool steel collar C, which is driven into place. A slot is milled across the blade in the center at *D*, and a set screw *E* serves the double purpose of binding the blade against the collar *C* and holding it central. The guide bushing *F* is provided with a small slot fitting over the blade to prevent it from turning, and is kept in place by the head of the screw *E*. There is, however, a slight allowance for play between the guide bushing and the head of the screw, in order to insure that the screw will bind the blade in the slot *D* and not tighten down upon the bushing before binding the blade. By simply removing the screw the counterbore can be provided with any size blade and guide within certain limits.

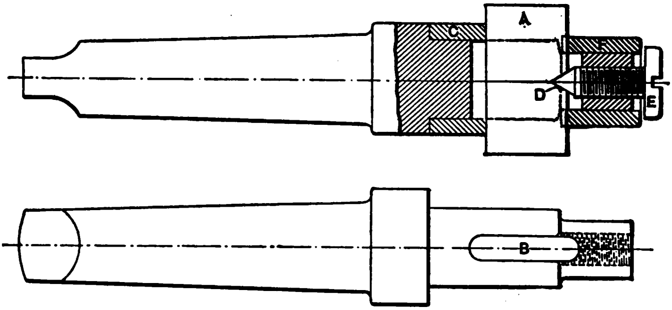

Fig. 275. Counterbore with Interchangeable Blades and Guide Bushings

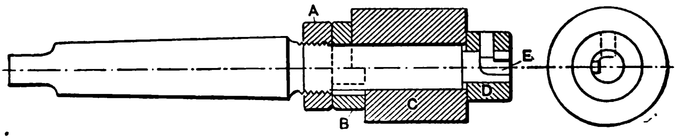

Fig. 276. Interchangeable Body and Guide Counterbore

Fig. 276 shows a counterbore of a different type. The collar *B* is keyed to the holder, and is provided with a step as shown in the cut by means of which the counterbore body *C* is driven. The collar is movable in the longitudinal direction of the holder, being pressed down toward the counterbore by means of the nut *A*. The thrust when binding is taken by the guide bushing *D*, which is provided with a pin sliding in a slot in the guide pin *E*. This slot is milled in the longitudinal direction of the holder about one-half of the length of the guide pin, and is then milled in form of a circular groove about one-quarter of a revolution. When the guide bushing with its pin is pushed over the guide pin and given a quarter of a turn, the nut *A* can be screwed down until it holds the body of the counterbore firmly in place. The advantage of this type is that the bushing and body can be very quickly changed and are simple to duplicate.

Fig. 277 shows a counterbore of a somewhat similar type. Here the driving collar *A* is fastened to the holder by a taper pin, and provided with a key freely fitting a slot in the body *B*. The guide *C* is screwed into the holder, and binds the counterbore body against the driving collar. The guide is provided with a screw slot to facilitate its being screwed in and out. A portion *D* on the stem of the guide should be plain and a good fit in a plain hole in the holder, in order to insure that the guide will be concentric with the body of the counterbore. The thread must, of course, in such a case fit very freely.

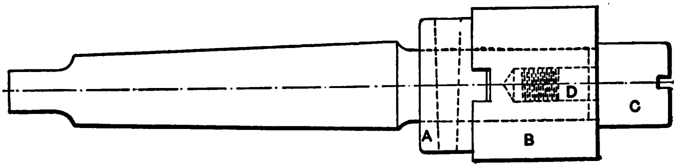

Fig. 277. Another Design of Interchangeable Body and Guide Counterbore

The variations possible are evidently many, but the types represented involve the principles upon which interchangeable body and guide counterbores are designed. The body and the guide should be easy to duplicate, there should be means insuring that they will always remain concentric in relation to one another, and all details needing fitting when made should be contained in the holder itself in order to prevent difficulties arising when placing new bodies or guides on old holders.

HOLLOW MILLS.

The hollow mill, if the action of the tool is analyzed, may be classed as a combination of end mill and counterbore. It is used most commonly in connection with spring screw threading dies, taking a cut preceding the die. Hollow mills are usually made adjustable, as shown in Fig. 278. The adjustment is produced by the same means as in spring screw threading dies, that is, with a clamp collar. In Fig. 279 is shown another class of hollow mills, less commonly used, termed solid hollow mills. The teeth in the latter are cut so shallow that the prongs are stiff and cannot be adjusted for size by bending inward as in the case of adjustable hollow mills.

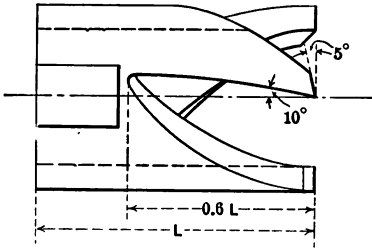

Fig. 278. Adjustable Hollow Mill

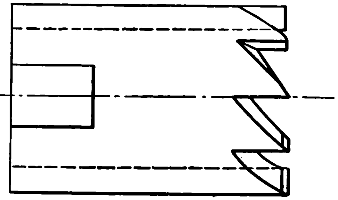

Fig. 279. Solid Hollow Mill

In order to produce clearance and prevent the tool from binding when cutting, the hole is back tapered so that the size to be cut is at the end where the cutting is done, but the diameter of the hole is gradually increasing toward the rear portion of the mill. The amount of this back taper is generally made different for steel and for brass. For steel the taper should be one-quarter inch per foot, for brass three-eighths inch per foot. The hole at the extreme cutting end should be chamfered slightly so that the piece to be cut can be brought into a central position by the mill.

Adjustable hollow mills are always provided with three flutes. These flutes are cut straight if the mill is to be used for brass, but on an angle, so as to produce front rake, if the tool is to be used for steel. The angle is effected simply by turning the milling-machine table over the desired amount, and should not exceed 10 degrees. The cutters used for cutting the flutes are 55-degree double angle cutters, 12 degrees on one side and 43 degrees on the other. As the land of a mill with only three flutes becomes too wide when milled with this class of cutters, it must be made narrower either by milling once more or by filing. The length of the fluted part should be about six-tenths of the whole length of the mill.

The outside of hollow mills ought to be ground the same as spring screw threading dies, and for the same reasons. The front part of the mill should preferably be tapered on the outside, and solid clamp collars with tapered holes be used for adjustment. The object and advantage of this, as well as the various forms of clamp collars, was all completely dealt with in connection with spring screw dies.

On small sizes the hole of the mill is enlarged toward the rear end as shown in Fig. 280. This precludes the necessity of tapering the hole all the way back. The cutting edge on hollow mills is relieved 5 degrees as shown in Fig. 278.

In Table CXXXII are given dimensions for hollow mills, corresponding to the dimensions already given for spring screw dies. It is evident that these dimensions are not necessarily the only ones possible. They are given only for guidance in laying out this class of tools. They correspond, however, to the practice of prominent small-tool manufacturers.

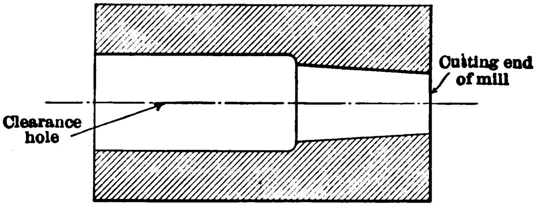

Fig. 280. Small Size Hollow Mill with Clearance Hole

TABLE CXXXII.

DIMENSIONS OF HOLLOW MILLS.

Diameter of Cut.	Outside Diameter.	Total Length.	Diameter of Cut.	Outside Diameter.	Total Length.
1/8	1/2	1 1/4	3/4	1 3/8	2 1/2
3/16	1/2	1 1/4	3/4	2	3
1/4	1/2	1 1/4	7/8	2	3
1/4	3/4	1 3/4	1	2	3
5/16	3/4	1 3/4	1 1/8	2	3
3/8	3/4	1 3/4	1 1/4	2	3
3/8	1	2	1 1/8	2 1/2	3 1/2
7/16	1	2	1 1/4	2 1/2	3 1/2
1/2	1	2	1 1/2	2 1/2	3 1/2
1/2	1 3/8	2 1/2	1 3/4	3 1/4	4
9/16	1 3/8	2 1/2	2	3 1/4	4
5/8	1 3/8	2 1/2	2 1/4	3 1/4	4

SOLID LATHE ARBORS.

Lathe arbors are usually manufactured by the makers of small cutting tools, and while not directly pertaining to the subject treated in this volume, it has been considered advisable to include a few remarks regarding them. Lathe arbors are used for holding in the lathe pieces which have holes passing through them so that they cannot be placed directly on the lathe centers. The arbor then serves as the medium by means of which the piece to be turned in a lathe may be supported while turning.

In Table CXXXIII are given the general dimensions for solid lathe arbors. In Table CXXXIV are given the dimensions for the flat for dogs and for counterbores and centers in the ends of the arbors. The diameter of the drill for the centers has been given according to Stub's steel wire gauge. For arbors with very heavy duty the centers may be made somewhat larger than those given in the table.

The notations of the letters given in the tables are as follows:

A = total length of arbor,
B = length of actual arbor,
C = length of end turned down for dog,
D = diameter of arbor,
E = diameter of end turned down for dog,
F = distance of size line from small end,
G = diameter of center drill,
H = depth of drilled hole,
I = diameter of countersunk center,
K = diameter of counterbore,
L = depth of counterbore, and
M = width of flat for dog.

In Table CXXXIII it will be noticed that a dimension F has been given for the distance of diameter D from the small end of the actual arbor. This obviously implies that the arbor is slightly tapered. The purpose of this taper is to permit the arbor to find its way straight into

TABLE CXXXIII.

DIMENSIONS OF SOLID LATHE ARBORS.

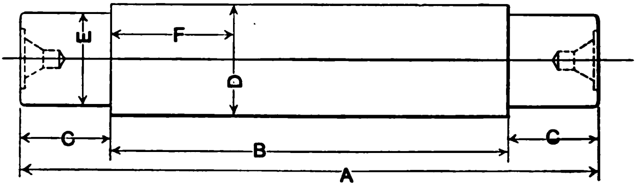

Fig. 281

D	*A*	*B*	*C*	*E*	*F*
1/4	4	2 3/8	13/16	7/32	5/8
5/16	4 1/4	2 9/16	27/32	9/32	43/64
3/8	4 1/2	2 3/4	7/8	11/32	23/32
7/16	4 3/4	2 15/16	29/32	3/8	49/64
1/2	5	3 1/8	15/16	7/16	13/16
5/8	5 1/2	3 1/2	1	9/16	29/32
3/4	6	3 7/8	1 1/16	21/32	1
7/8	6 1/2	4 1/4	1 1/8	25/32	1 3/32
1	7	4 5/8	1 3/16	7/8	1 3/16
1 1/8	7 1/2	5	1 1/4	1	1 9/32
1 1/4	8	5 3/8	1 5/16	1 3/32	1 3/8
1 3/8	8 1/2	5 3/4	1 3/8	1 7/32	1 15/32
1 1/2	9	6 1/8	1 7/16	1 5/16	1 9/16
1 5/8	9 1/2	6 1/2	1 1/2	1 7/16	1 21/32
1 3/4	10	6 7/8	1 9/16	1 17/32	1 3/4
1 7/8	10 1/2	7 1/4	1 5/8	1 21/32	1 27/32
2	11	7 5/8	1 11/16	1 3/4	1 15/16
2 1/8	11 3/8	7 7/8	1 3/4	1 7/8	2
2 1/4	11 3/4	8 1/8	1 13/16	1 31/32	2 1/16
2 3/8	12 1/8	8 3/8	1 7/8	2 3/32	2 1/8
2 1/2	12 1/2	8 5/8	1 15/16	2 3/16	2 3/16
2 5/8	12 7/8	8 7/8	2	2 5/16	2 1/4
2 3/4	13 1/4	9 1/8	2 1/16	2 1/32	2 5/16
2 7/8	13 5/8	9 3/8	2 1/8	2 17/32	2 3/8
3	14	9 5/8	2 3/16	2 5/8	2 7/16
3 1/4	14 3/4	10 1/8	2 5/16	2 27/32	2 9/16
3 1/2	15 1/2	10 5/8	2 7/16	3 1/16	2 11/16
3 3/4	16 1/4	11 1/8	2 9/16	3 9/32	2 13/16
4	17	11 5/8	2 11/16	3 1/2	2 15/16

TABLE CXXXIV.

DIMENSIONS OF CENTERS AND FLATS FOR DOG, SOLID LATHE ARBORS.

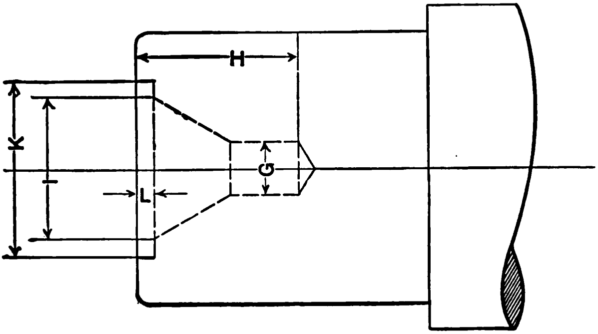

Fig. 282

(See also Notation on page 503.)

D	*G*	*H*	*I*	*K*	*L*	*M*
1/4	0.046	1/8	5/32	3/16	1/32	5/64
5/16	0.052	5/32	5/32	13/64	1/32	3/32
3/8	0.055	3/16	11/64	7/32	1/32	1/4
7/16	0.059	7/32	11/64	15/64	1/32	9/64
1/2	0.063	1/4	3/16	1/4	1/32	5/32
5/8	0.073	5/16	13/64	9/32	1/32	3/16
3/4	0.079	3/8	7/32	5/16	1/32	15/64
7/8	0.089	7/16	15/64	11/32	1/32	9/32
1	0.096	1/2	1/4	3/8	1/32	5/16
1 1/8	0.104	9/16	17/64	13/32	3/64	11/32
1 1/4	0.110	5/8	5/16	7/16	3/64	25/64
1 3/8	0.120	11/16	21/64	15/32	3/64	7/16
1 1/2	0.128	3/4	11/32	1/2	3/64	15/32
1 5/8	0.136	13/16	3/8	17/32	3/64	1/2
1 3/4	0.144	7/8	13/32	9/16	3/64	9/16
1 7/8	0.152	15/16	7/16	5/8	3/64	19/32
2	0.157	1	15/32	11/16	3/64	5/8
2 1/8	0.166	1 1/64	1/2	23/32	1/16	21/32
2 1/4	0.172	1 1/32	17/32	3/4	1/16	11/16
2 3/8	0.180	1 3/64	35/64	25/32	1/16	3/4
2 1/2	0.189	1 1/16	9/16	13/16	1/16	25/32
2 5/8	0.196	1 5/64	37/64	27/32	1/16	13/16
2 3/4	0.204	1 3/32	19/32	7/8	1/16	7/8
2 7/8	0.213	1 7/64	39/64	29/32	1/16	29/32
3	0.221	1 1/8	5/8	15/16	1/16	15/16
3 1/4	0.234	1 5/32	21/32	1	1/16	1
3 1/2	0.250	1 3/16	11/16	1 1/16	1/16	1 1/16
3 3/4	0.266	1 7/32	23/32	1 1/8	1/16	1 3/16
4	0.281	1 1/4	3/4	1 3/16	1/16	1 1/4

the hole in the piece it is intended to support, and to allow for possible variations in the diameters of the holes. This taper is made very slight, usually 0.006 inch per foot.

As far as the hardening of arbors is concerned the practice at the present time among manufacturers is to harden them all over. That this practice has been universally adopted has probably been due to the increased demands placed on tools in regard to strength and durability, which has followed the changed commercial conditions of recent years. It can by no means be said, however, that an arbor hardened all over will in the long run produce as *accurate* results as would an arbor hardened only at the ends, the central portion, or the actual arbor, being left soft. The reason for this is very obvious. When hardening the arbor all over, severe internal stresses will occur, and after having been used for some time, and hammered upon more or less when driving on and off pieces, these internal stresses will cause the arbor to spring and get out of true. This will not happen with a soft arbor, hardened only at the ends, as no internal stresses of any amount have to be considered. To keep a soft arbor in good condition, and to keep it true, it is only necessary to use it with care. When really accurate work is desired, arbors hardened at the ends only should therefore always be used.

It is true that if hardened arbors are considered desirable for any specific reason if they are "seasoned" before finish grinding, the same as plug gauges, etc., the internal stresses are greatly relieved, and the probabilities of springing while in use are largely reduced. But it is impossible to fully eliminate these stresses, and no matter how carefully the hardening process has been attended to, and how long the arbor has been seasoned, the soft arbor will remain superior for many jobs of extreme accuracy.

INDEX.

SHORT-TITLE CATALOGUE

OF THE

PUBLICATIONS

OF

JOHN WILEY & SONS,

NEW YORK.

LONDON: CHAPMAN & HALL, LIMITED.

ARRANGED UNDER SUBJECTS.

Descriptive circulars sent on application. Books marked with an asterisk (*) are sold at *net* prices only. All books are bound in cloth unless otherwise stated.

AGRICULTURE—HORTICULTURE—FORESTRY.

Armsby's Manual of Cattle-feeding	12mo,	$1 75
Principles of Animal Nutrition	8vo,	4 00
Budd and Hansen's American Horticultural Manual:		
Part I. Propagation, Culture, and Improvement	12mo,	1 50
Part II. Systematic Pomology	12mo,	1 50
Elliott's Engineering for Land Drainage	12mo,	1 50
Practical Farm Drainage	12mo,	1 00
Graves's Forest Mensuration	8vo,	4 00
Green's Principles of American Forestry	12mo,	1 50
Grotenfelt's Principles of Modern Dairy Practice. (Woll.)	12mo,	2 00
* Herrick's Denatured or Industrial Alcohol	8vo,	4 00
Kemp and Waugh's Landscape Gardening. (New Edition, Rewritten. In Preparation).		
* McKay and Larsen's Principles and Practice of Butter-making	8vo,	1 50
Maynard's Landscape Gardening as Applied to Home Decoration	12mo,	1 50
Quaintance and Scott's Insects and Diseases of Fruits. (In Preparation).		
Sanderson's Insects Injurious to Staple Crops	12mo,	1 50
* Schwarz's Longleaf Pine in Virgin Forests	12mo,	1 25
Stockbridge's Rocks and Soils	8vo,	2 50
Winton's Microscopy of Vegetable Foods	8vo,	7 50
Woll's Handbook for Farmers and Dairymen	16mo,	1 50

ARCHITECTURE.

Baldwin's Steam Heating for Buildings	12mo,	2 50
Berg's Buildings and Structures of American Railroads	4to,	5 00
Birkmire's Architectural Iron and Steel	8vo,	3 50
Compound Riveted Girders as Applied in Buildings	8vo,	2 00
Planning and Construction of American Theatres	8vo,	3 00
Planning and Construction of High Office Buildings	8vo,	3 50
Skeleton Construction in Buildings	8vo,	3 00
Briggs's Modern American School Buildings	8vo,	4 00
Byrne's Inspection of Material and Wormanship Employed in Construction.	16mo,	3 00
Carpenter's Heating and Ventilating of Buildings	8vo,	4 00

Freitag's Architectural Engineering	8vo	3 50
Fireproofing of Steel Buildings	8vo,	2 50
French and Ives's Stereotomy	8vo,	2 50
Gerhard's Guide to Sanitary House-Inspection	16mo,	1 00
* Modern Baths and Bath Houses	8vo,	3 00
Sanitation of Public Buildings	12mo,	1 50
Theatre Fires and Panics	12mo,	1 50
Holley and Ladd's Analysis of Mixed Paints, Color Pigments, and Varnishes	Large 12mo,	2 50
Johnson's Statics by Algebraic and Graphic Methods	8vo,	2 00
Kellaway's How to Lay Out Suburban Home Grounds	8vo,	2 00
Kidder's Architects' and Builders' Pocket-book	16mo, mor.	5 00
Maire's Modern Pigments and their Vehicles	12mo,	2 00
Merrill's Non-metallic Minerals: Their Occurrence and Uses	8vo,	4 00
Stones for Building and Decoration	8vo,	5 00
Monckton's Stair-building	4to,	4 00
Patton's Practical Treatise on Foundations	8vo,	5 00
Peabody's Naval Architecture	8vo,	7 50
Rice's Concrete-block Manufacture	8vo,	2 00
Richey's Handbook for Superintendents of Construction	16mo, mor.	4 00
* Building Mechanics' Ready Reference Book:		
* Building Foreman's Pocket Book and Ready Reference. (In Press.)		
* Carpenters' and Woodworkers' Edition	16mo, mor.	1 50
* Cement Workers and Plasterer's Edition	16mo, mor.	1 50
* Plumbers', Steam-Filters', and Tinners' Edition	16mo, mor.	1 50
* Stone- and Brick-masons' Edition	16mo, mor.	1 50
Sabin's House Painting	12mo,	1 00
Industrial and Artistic Technology of Paints and Varnish	8vo,	3 00
Siebert and Biggin's Modern Stone-cutting and Masonry	8vo,	1 50
Snow's Principal Species of Wood	8vo,	3 50
Towne's Locks and Builders' Hardware	18mo, mor.	3 00
Wait's Engineering and Architectural Jurisprudence	8vo,	6 00
	Sheep,	6 50
Law of Contracts	8vo,	3 00
Law of Operations Preliminary to Construction in Engineering and Architecture	8vo,	5 00
	Sheep,	5 50
Wilson's Air Conditioning	12mo,	1 50
Worcester and Atkinson's Small Hospitals, Establishment and Maintenance, Suggestions for Hospital Architecture, with Plans for a Small Hospital	12mo,	1 25

ARMY AND NAVY.

Bernadou's Smokeless Powder, Nitro-cellulose, and the Theory of the Cellulose Molecule	12mo,	2 50
Chase's Art of Pattern Making	12mo,	2 50
Screw Propellers and Marine Propulsion	8vo,	3 00
* Cloke's Enlisted Specialist's Examiner	8vo,	2 00
Gunner's Examiner	8vo,	1 50
Craig's Azimuth	4to,	3 50
Crehore and Squier's Polarizing Photo-chronograph	8vo,	3 00
* Davis's Elements of Law	8vo,	2 50
* Treatise on the Military Law of United States	8vo,	7 00
	Sheep.	7 50
De Brack's Cavalry Outpost Duties. (Carr)	24mo, mor.	2 00
* Dudley's Military Law and the Procedure of Courts-martial	Large 12mo,	2 50
Durand's Resistance and Propulsion of Ships	8vo,	5 00

* Dyer's Handbook of Light Artillery	12mo,	3 00
Eissler's Modern High Explosives	8vo,	4 00
* Fiebeger's Text-book on Field Fortification	Large 12mo,	2 00
Hamilton and Bond's The Gunner's Catechism	18mo,	1 00
* Hoff's Elementary Naval Tactics	8vo,	1 50
Ingalls's Handbook of Problems in Direct Fire	8vo,	4 00
* Lissak's Ordnance and Gunnery	8vo,	6 00
* Ludlow's Logarithmic and Trigonometric Tables	8vo,	1 00
* Lyons's Treatise on Electromagnetic Phenomena. Vols. I. and II.	8vo, each,	6 00
* Mahan's Permanent Fortifications. (Mercur)	8vo, half mor.	7 50
Manual for Courts-martial	16mo, mor.	1 50
* Mercur's Attack of Fortified Places	12mo,	2 00
* Elements of the Art of War	8vo,	4 00
Metcalf's Cost of Manufactures—And the Administration of Workshops	8vo,	5 00
Nixon's Adjutants' Manual	24mo,	1 00
Peabody's Naval Architecture	8vo,	7 50
* Phelps's Practical Marine Surveying	8vo,	2 50
Putnam's Nautical Charts	8vo,	2 00
Sharpe's Art of Subsisting Armies in War	18mo, mor.	1 50
* Tupes and Poole's Manual of Bayonet Exercises and Musketry Fencing.	24mo, leather,	50
* Weaver's Military Explosives	8vo,	3 00
Woodhull's Notes on Military Hygiene	16mo,	1 50

ASSAYING.

Betts's Lead Refining by Electrolysis	8vo,	4 00
Fletcher's Practical Instructions in Quantitative Assaying with the Blowpipe.	16mo, mor.	1 50
Furman's Manual of Practical Assaying	8vo,	3 00
Lodge's Notes on Assaying and Metallurgical Laboratory Experiments	8vo,	3 00
Low's Technical Methods of Ore Analysis	8vo,	3 00
Miller's Cyanide Process	12mo,	1 00
Manual of Assaying	12mo,	1 00
Minet's Production of Aluminum and its Industrial Use. (Waldo)	12mo,	2 50
O'Driscoll's Notes on the Treatment of Gold Ores	8vo,	2 00
Ricketts and Miller's Notes on Assaying	8vo,	3 00
Robine and Lenglen's Cyanide Industry. (Le Clerc)	8vo,	4 00
Ulke's Modern Electrolytic Copper Refining	8vo,	3 00
Wilson's Chlorination Process	12mo,	1 50
Cyanide Processes	12mo,	1 50

ASTRONOMY.

Comstock's Field Astronomy for Engineers	8vo,	2 50
Craig's Azimuth	4to,	3 50
Crandall's Text-book on Geodesy and Least Squares	8vo,	3 00
Doolittle's Treatise on Practical Astronomy	8vo,	4 00
Gore's Elements of Geodesy	8vo,	2 50
Hayford's Text-book of Geodetic Astronomy	8vo,	3 00
Merriman's Elements of Precise Surveying and Geodesy	8vo,	2 50
* Michie and Harlow's Practical Astronomy	8vo,	3 00
Rust's Ex-meridian Altitude, Azimuth and Star-Finding Tables	8vo,	5 00
* White's Elements of Theoretical and Descriptive Astronomy	12mo,	2 00

CHEMISTRY.

* Abderhalden's Physiological Chemistry in Thirty Lectures. (Hall and Defren)	8vo,	5 00
* Abegg's Theory of Electrolytic Dissociation. (von Ende)	12mo,	1 25
Alexeyeff's General Principles of Organic Syntheses. (Matthews)	8vo,	3 00
Allen's Tables for Iron Analysis	8vo,	3 00
Arnold's Compendium of Chemistry. (Mandel)	Large 12mo,	3 50
Association of State and National Food and Dairy Departments, Hartford, Meeting, 1906	8vo,	3 00
Jamestown Meeting, 1907	8vo,	3 00
Austen's Notes for Chemical Students	12mo,	1 50
Baskerville's Chemical Elements. (In Preparation.)		
Bernadou's Smokeless Powder.—Nitro-cellulose, and Theory of the Cellulose Molecule	12mo,	2 50
Bilts's Chemical Preparations. (Hall and Blanchard). (In Press.)		
* Blanchard's Synthetic Inorganic Chemistry	12mo,	1 00
* Browning's Introduction to the Rarer Elements	8vo,	1 50
Brush and Penfield's Manual of Determinative Mineralogy	8vo,	4 00
* Claassen's Beet-sugar Manufacture. (Hall and Rolfe)	8vo,	3 00
Classen's Quantitative Chemical Analysis by Electrolysis. (Boltwood)	8vo,	3 00
Cohn's Indicators and Test-papers	12mo,	2 00
Tests and Reagents	8vo,	3 00
* Danneel's Electrochemistry. (Merriam)	12mo,	1 25
Dannerth's Methods of Textile Chemistry	12mo,	2 00
Duhem's Thermodynamics and Chemistry. (Burgess)	8vo,	4 00
Eakle's Mineral Tables for the Determination of Minerals by their Physical Properties	8vo,	1 25
Eissler's Modern High Explosives	8vo,	4 00
Effront's Enzymes and their Applications. (Prescott)	8vo,	3 00
Erdmann's Introduction to Chemical Preparations. (Dunlap)	12mo,	1 25
* Fischer's Physiology of Alimentation	Large 12mo,	2 00
Fletcher's Practical Instructions in Quantitative Assaying with the Blowpipe.	12mo, mor.	1 50
Fowler's Sewage Works Analyses	12mo,	2 00
Fresenius's Manual of Qualitative Chemical Analysis. (Wells)	8vo,	5 00
Manual of Qualitative Chemical Analysis. Part I. Descriptive. (Wells)	8vo,	3 00
Quantitative Chemical Analysis. (Cohn) 2 vols.	8vo,	12 50
When Sold Separately, Vol. I, $6. Vol. II, $8.		
Fuertes's Water and Public Health	12mo,	1 50
Furman's Manual of Practical Assaying	8vo,	3 00
* Getman's Exercises in Physical Chemistry	12mo,	2 00
Gill's Gas and Fuel Analysis for Engineers	12mo,	1 25
* Gooch and Browning's Outlines of Qualitative Chemical Analysis.	Large 12mo,	1 25
Grotenfelt's Principles of Modern Dairy Practice. (Woll)	12mo,	2 00
Groth's Introduction to Chemical Crystallography (Marshall)	12mo,	1 25
Hammarsten's Text-book of Physiological Chemistry. (Mandel)	8vo,	4 00
Hanausek's Microscopy of Technical Products. (Winton)	8vo,	5 00
* Haskins and Macleod's Organic Chemistry	12mo,	2 00
Helm's Principles of Mathematical Chemistry. (Morgan)	12mo,	1 50
Hering's Ready Reference Tables (Conversion Factors)	16mo, mor.	2 50
* Herrick's Denatured or Industrial Alcohol	8vo,	4 00
Hinds's Inorganic Chemistry	8vo,	3 00
* Laboratory Manual for Students	12mo,	1 00
* Holleman's Laboratory Manual of Organic Chemistry for Beginners. (Walker)	12mo,	1 00
Text-book of Inorganic Chemistry. (Cooper)	8vo,	2 50
Text-book of Organic Chemistry. (Walker and Mott)	8vo,	2 50

olley and Ladd's Analysis of Mixed Paints, Color Pigments, and Varnishes.	Large 12mo,	2 50
Hopkins's Oil-chemists' Handbook	8vo,	3 00
Iddings's Rock Minerals	8vo,	5 00
Jackson's Directions for Laboratory Work in Physiological Chemistry	8vo,	1 25
Johannsen's Determination of Rock-forming Minerals in Thin Sections	8vo,	4 00
Johnson's Chemical Analysis of Special Steel. Steel-making. (Alloys and Graphite.) (In Press.)		
Keep's Cast Iron	8vo,	2 50
Ladd's Manual of Quantitative Chemical Analysis	12mo,	1 00
Landauer's Spectrum Analysis. (Tingle)	8vo,	3 00
* Langworthy and Austen's Occurrence of Aluminium in Vegetable Products, Animal Products, and Natural Waters	8vo,	2 00
Lassar-Cohn's Application of Some General Reactions to Investigations in Organic Chemistry. (Tingle)	12mo,	1 00
Leach's Inspection and Analysis of Food with Special Reference to State Control	8vo,	7 50
Löb's Electrochemistry of Organic Compounds. (Lorenz)	8vo,	3 00
Lodge's Notes on Assaying and Metallurgical Laboratory Experiments	8vo,	3 00
Low's Technical Method of Ore Analysis	8vo,	3 00
Lunge's Techno-chemical Analysis. (Cohn)	12mo,	1 00
* McKay and Larsen's Principles and Practice of Butter-making	8vo,	1 50
Maire's Modern Pigments and their Vehicles	12mo,	2 00
Mandel's Handbook for Bio-chemical Laboratory	12mo,	1 50
* Martin's Laboratory Guide to Qualitative Analysis with the Blowpipe	12mo,	60
Mason's Examination of Water. (Chemical and Bacteriological.)	12mo,	1 25
Water-supply. (Considered Principally from a Sanitary Standpoint.	8vo,	4 00
Mathewson's Chemical Theory for First Year College Students. (In Press).		
Matthews's Textile Fibres. 2d Edition, Rewritten	8vo,	4 00
* Meyer's Determination of Radicles in Carbon Compounds. (Tingle)	12mo,	1 25
Miller's Cyanide Process	12mo,	1 00
Manual of Assaying	12mo,	1 00
Minet's Production of Aluminum and its Industrial Use. (Waldo)	12mo,	2 50
Mixter's Elementary Text-book of Chemistry	12mo,	1 50
Morgan's Elements of Physical Chemistry	12mo,	3 00
Outline of the Theory of Solutions and its Results	12mo,	1 00
* Physical Chemistry for Electrical Engineers	12mo,	1 50
Morse's Calculations used in Cane-sugar Factories	16mo, mor.	1 50
* Muir's History of Chemical Theories and Laws	8vo,	4 00
Mulliken's General Method for the Identification of Pure Organic Compounds. Vol. I.	Large 8vo,	5 00
O'Driscoll's Notes on the Treatment of Gold Ores	8vo,	2 00
Ostwald's Conversations on Chemistry. Part One. (Ramsey)	12mo,	1 50
" " " " Part Two. (Turnbull)	12mo,	2 00
* Palmer's Practical Test Book of Chemistry	12mo,	1 00
* Pauli's Physical Chemistry in the Service of Medicine. (Fischer)	12mo,	1 25
* Penfield's Notes on Determinative Mineralogy and Record of Mineral Tests.	8vo, paper,	50
Tables of Minerals, Including the Use of Minerals and Statistics of Domestic Production	8vo,	1 00
Pictet's Alkaloids and their Chemical Constitution. (Biddle)	8vo,	5 00
Poole's Calorific Power of Fuels	8vo,	3 00
Prescott and Winslow's Elements of Water Bacteriology, with Special Reference to Sanitary Water Analysis	12mo,	1 50
* Reisig's Guide to Piece-dyeing	8vo,	25 00
Richards and Woodman's Air, Water, and Food from a Sanitary Standpoint	8vo,	2 00
Ricketts and Miller's Notes on Assaying	8vo,	3 00
Rideal's Disinfection and the Preservation of Food	8vo,	4 00
Sewage and the Bacterial Purification of Sewage	8vo,	4 00

Riggs's Elementary Manual for the Chemical Laboratory	8vo,	1 25
Robine and Lenglen's Cyanide Industry. (Le Clerc).	8vo,	4 00
Ruddiman's Incompatibilities in Prescriptions.	8vo,	2 00
Whys in Pharmacy	12mo,	1 00
Ruer's Elements of Metallography. (Mathewson) (In Preparation.)		
Sabin's Industrial and Artistic Technology of Paints and Varnish.	8vo,	3 00
Salkowski's Physiological and Pathological Chemistry. (Orndorff).	8vo,	2 50
Schimpf's Essentials of Volumetric Analysis.	12mo,	1 25
* Qualitative Chemical Analysis	8vo,	1 25
Text-book of Volumetric Analysis.	12mo,	2 50
Smith's Lecture Notes on Chemistry for Dental Students.	8vo,	2 50
Spencer's Handbook for Cane Sugar Manufacturers.	16mo, mor.	3 00
Handbook for Chemists of Beet-sugar Houses	16mo, mor.	3 00
Stockbridge's Rocks and Soils.	8vo,	2 50
* Tillman's Descriptive General Chemistry.	8vo,	3 00
* Elementary Lessons in Heat	8vo,	1 50
Treadwell's Qualitative Analysis. (Hall).	8vo,	3 00
Quantitative Analysis. (Hall).	8vo,	4 00
Turneaure and Russell's Public Water-supplies	8vo,	5 00
Van Deventer's Physical Chemistry for Beginners. (Boltwood)	12mo,	1 50
Venable's Methods and Devices for Bacterial Treatment of Sewage	8vo,	3 00
Ward and Whipple's Freshwater Biology. (In Press.)		
Ware's Beet-sugar Manufacture and Refining. Vol. I.	Small 8vo,	4 00
" " " " " Vol. II.	Small 8vo,	5 00
Washington's Manual of the Chemical Analysis of Rocks.	8vo,	2 00
* Weaver's Military Explosives.	8vo.	3 00
Wells's Laboratory Guide in Qualitative Chemical Analysis.	8vo,	1 50
Short Course in Inorganic Qualitative Chemical Analysis for Engineering Students.	12mo,	1 50
Text-book of Chemical Arithmetic	12mo,	1 25
Whipple's Microscopy of Drinking-water.	8vo,	3 50
Wilson's Chlorination Process.	12mo,	1 50
Cyanide Processes	12mo,	1 50
Winton's Microscopy of Vegetable Foods	8vo,	7 50

CIVIL ENGINEERING.

BRIDGES AND ROOFS. HYDRAULICS. MATERIALS OF ENGINEERING. RAILWAY ENGINEERING.

Baker's Engineers' Surveying Instruments.	12mo,	3 00
Bixby's Graphical Computing Table.	Paper $19\frac{1}{2} \times 24\frac{1}{4}$ inches.	25
Breed and Hosmer's Principles and Practice of Surveying. 2 Volumes.		
Vol. I. Elementary Surveying	8vo,	3 00
Vol. II. Higher Surveying	8vo,	2 50
* Burr's Ancient and Modern Engineering and the Isthmian Canal	8vo,	3 50
Comstock's Field Astronomy for Engineers.	8vo,	2 50
* Corthell's Allowable Pressures on Deep Foundations	12mo,	1 25
Crandall's Text-book on Geodesy and Least Squares	8vo,	3 00
Davis's Elevation and Stadia Tables.	8vo,	1 00
Elliott's Engineering for Land Drainage.	12mo,	1 50
Practical Farm Drainage.	12mo,	1 00
*Fiebeger's Treatise on Civil Engineering.	8vo,	5 00
Flemer's Phototopographic Methods and Instruments.	8vo,	5 00
Folwell's Sewerage. (Designing and Maintenance.).	8vo,	3 00
Freitag's Architectural Engineering.	8vo,	3 50
French and Ives's Stereotomy	8vo,	2 50
Goodhue's Municipal Improvements.	12mo,	1 50
Gore's Elements of Geodesy.	8vo,	2 50
* Hauch's and Rice's Tables of Quantities for Preliminary Estimates	12mo,	1 25

Hayford's Text-book of Geodetic Astronomy	8vo,	3 00
Hering's Ready Reference Tables. (Conversion Factors)	16mo, mor.	2 50
Howe's Retaining Walls for Earth	12mo,	1 25
* Ives's Adjustments of the Engineer's Transit and Level	16mo, Bds.	25
Ives and Hilts's Problems in Surveying	16mo, mor.	1 50
Johnson's (J. B.) Theory and Practice of Surveying	Small 8vo,	4 00
Johnson's (L. J.) Statics by Algebraic and Graphic Methods	8vo,	2 00
Kinnicutt, Winslow and Pratt's Purification of Sewage. (In Preparation.)		
Laplace's Philosophical Essay on Probabilities. (Truscott and Emory)	12mo,	2 00
Mahan's Descriptive Geometry	8vo,	1 50
Treatise on Civil Engineering. (1873.) (Wood)	8vo,	5 00
Merriman's Elements of Precise Surveying and Geodesy	8vo,	2 50
Merriman and Brooks's Handbook for Surveyors	16mo, mor.	2 00
Nugent's Plane Surveying	8vo,	3 50
Ogden's Sewer Construction	8vo,	3 00
Sewer Design	12mo,	2 00
Parsons's Disposal of Municipal Refuse	8vo,	2 00
Patton's Treatise on Civil Engineering	8vo, half leather,	7 50
Reed's Topographical Drawing and Sketching	4to,	5 00
Rideal's Sewage and the Bacterial Purification of Sewage	8vo,	4 00
Riemer's Shaft-sinking under Difficult Conditions. (Corning and Peele)	8vo,	3 00
Siebert and Biggin's Modern Stone-cutting and Masonry	8vo,	1 50
Smith's Manual of Topographical Drawing. (McMillan)	8vo,	2 50
Soper's Air and Ventilation of Subways	Large 12mo,	2 50
Tracy's Plane Surveying	16mo, mor.	3 00
* Trautwine's Civil Engineer's Pocket-book	16mo, mor.	5 00
Venable's Garbage Crematories in America	8vo,	2 00
Methods and Devices for Bacterial Treatment of Sewage	8vo,	3 00
Wait's Engineering and Architectural Jurisprudence	8vo,	6 00
	Sheep,	6 50
Law of Contracts	8vo,	3 00
Law of Operations Preliminary to Construction in Engineering and Architecture	8vo,	5 00
	Sheep,	5 50
Warren's Stereotomy—Problems in Stone-cutting	8vo,	2 50
* Waterbury's Vest-Pocket Hand-book of Mathematics for Engineers.	$2\frac{7}{8} \times 5\frac{3}{8}$ inches, mor.	1 00
Webb's Problems in the Use and Adjustment of Engineering Instruments.	16mo, mor.	1 25
Wilson's (H. N.) Topographic Surveying	8vo,	3 50
Wilson's (W. L.) Elements of Railroad Track and Construction	12mo,	2 00

BRIDGES AND ROOFS.

Boller's Practical Treatise on the Construction of Iron Highway Bridges	8vo,	2 00
Burr and Falk's Design and Construction of Metallic Bridges	8vo,	5 00
Influence Lines for Bridge and Roof Computations	8vo,	3 00
Du Bois's Mechanics of Engineering. Vol. II.	Small 4to,	10 00
Foster's Treatise on Wooden Trestle Bridges	4to,	5 00
Fowler's Ordinary Foundations	8vo,	3 50
French and Ives's Stereotomy	8vo,	2 50
Greene's Arches in Wood, Iron, and Stone	8vo,	2 50
Bridge Trusses	8vo,	2 50
Roof Trusses	8vo,	1 25
Grimm's Secondary Stresses in Bridge Trusses	8vo,	2 50
Heller's Stresses in Structures and the Accompanying Deformations	8vo,	3 00
Howe's Design of Simple Roof-trusses in Wood and Steel	8vo,	2 00
Symmetrical Masonry Arches	8vo,	2 50
Treatise on Arches	8vo,	4 00

Johnson, Bryan, and Turneaure's Theory and Practice in the Designing of Modern Framed Structures	**Small 4to,**	**10 00**
Merriman and Jacoby's Text-book on Roofs and Bridges:		
Part I. Stresses in Simple Trusses	**8vo,**	**2 50**
Part II. Graphic Statics	**8vo,**	**2 50**
Part III. Bridge Design	**8vo,**	**2 50**
Part IV. Higher Structures	**8vo,**	**2 50**
Morison's Memphis Bridge	**Oblong 4to,**	**10 00**
Sondericker's Graphic Statics, with Applications to Trusses, Beams, and Arches.	**8vo,**	**2 00**
Waddell's De Pontibus, Pocket-book for Bridge Engineers	**16mo, mor.,**	**2 00**
*** Specifications for Steel Bridges**	**12mo,**	**50**
Waddell and Harrington's Bridge Engineering. (In Preparation.)		
Wright's Designing of Draw-spans. Two parts in one volume	**8vo,**	**3 50**

HYDRAULICS.

Barnes's Ice Formation	**8vo,**	**3 00**
Bazin's Experiments upon the Contraction of the Liquid Vein Issuing from an Orifice. (Trautwine)	**8vo,**	**2 00**
Bovey's Treatise on Hydraulics	**8vo,**	**5 00**
Church's Diagrams of Mean Velocity of Water in Open Channels.	**Oblong 4to, paper,**	**1 50**
Hydraulic Motors	**8vo,**	**2 00**
Mechanics of Engineering	**8vo,**	**6 00**
Coffin's Graphical Solution of Hydraulic Problems	**16mo, mor.**	**2 50**
Flather's Dynamometers, and the Measurement of Power	**12mo,**	**3 00**
Folwell's Water-supply Engineering	**8vo,**	**4 00**
Frizell's Water-power	**8vo,**	**5 00**
Fuertes's Water and Public Health	**12mo,**	**1 50**
Water-filtration Works	**12mo,**	**2 50**
Ganguillet and Kutter's General Formula for the Uniform Flow of Water in Rivers and Other Channels. (Hering and Trautwine)	**8vo,**	**4 00**
Hazen's Clean Water and How to Get It	**Large 12mo,**	**1 50**
Filtration of Public Water-supplies	**8vo,**	**3 00**
Hazlehurst's Towers and Tanks for Water-works	**8vo,**	**2 50**
Herschel's 115 Experiments on the Carrying Capacity of Large, Riveted, Metal Conduits	**8vo,**	**2 00**
Hoyt and Grover's River Discharge	**8vo,**	**2 00**
Hubbard and Kiersted's Water-works Management and Maintenance	**8vo,**	**4 00**
*** Lyndon's Development and Electrical Distribution of Water Power**	**8vo,**	**3 00**
Mason's Water-supply. (Considered Principally from a Sanitary Standpoint.)	**8vo,**	**4 00**
Merriman's Treatise on Hydraulics	**8vo,**	**5 00**
*** Michie's Elements of Analytical Mechanics**	**8vo,**	**4 00**
*** Molitor's Hydraulics of Rivers, Weirs and Sluices**	**8vo,**	**2 00**
Richards's Laboratory Notes on Industrial Water Analysis. (In Press).		
Schuyler's Reservoirs for Irrigation, Water-power, and Domestic Water-supply	**Large 8vo,**	**5 00**
*** Thomas and Watt's Improvement of Rivers**	**4to,**	**6 00**
Turneaure and Russell's Public Water-supplies	**8vo,**	**5 00**
Wegmann's Design and Construction of Dams. 5th Ed., enlarged	**4to,**	**6 00**
Water-supply of the City of New York from 1658 to 1895	**4to,**	**10 00**
Whipple's Value of Pure Water	**Large 12mo,**	**1 00**
Williams and Hazen's Hydraulic Tables	**8vo,**	**1 50**
Wilson's Irrigation Engineering	**Small 8vo,**	**4 00**
Wolff's Windmill as a Prime Mover	**8vo,**	**3 00**
Wood's Elements of Analytical Mechanics	**8vo,**	**3 00**
Turbines	**8vo,**	**2 50**

MATERIALS OF ENGINEERING.

Baker's Roads and Pavements	8vo,	5 00
Treatise on Masonry Construction	8vo,	5 00
Birkmire's Architectural Iron and Steel	8vo,	3 50
Compound Riveted Girders as Applied in Buildings	8vo,	2 00
Black's United States Public Works	Oblong 4to,	5 00
Bleininger's Manufacture of Hydraulic Cement. (In Preparation.)		
* Bovey's Strength of Materials and Theory of Structures	8vo,	7 50
Burr's Elasticity and Resistance of the Materials of Engineering	8vo,	7 50
Byrne's Highway Construction	8vo,	5 00
Inspection of the Materials and Workmanship Employed in Construction.	16mo,	3 00
Church's Mechanics of Engineering	8vo,	6 00
Du Bois's Mechanics of Engineering.		
Vol. I. Kinematics, Statics, Kinetics	Small 4to,	7 50
Vol. II. The Stresses in Framed Structures, Strength of Materials and Theory of Flexures	Small 4to,	10 00
*Eckel's Cements, Limes, and Plasters	8vo,	6 00
Stone and Clay Products used in Engineering. (In Preparation.)		
Fowler's Ordinary Foundations	8vo,	3 50
Graves's Forest Mensuration	8vo,	4 00
Green's Principles of American Forestry	12mo,	1 50
* Greene's Structural Mechanics	8vo,	2 50
Holly and Ladd's Analysis of Mixed Paints, Color Pigments and Varnishes	Large 12mo,	2 50
Johnson's (C. M.) Chemical Analysis of Special Steels. (In Preparation.)		
Johnson's (J. B.) Materials of Construction	Large 8vo,	6 00
Keep's Cast Iron	8vo,	2 50
Kidder's Architects and Builders' Pocket-book	16mo,	5 00
Lanza's Applied Mechanics	8vo,	7 50
Maire's Modern Pigments and their Vehicles	12mo,	2 00
Martens's Handbook on Testing Materials. (Henning) 2 vols	8vo,	7 50
Maurer's Technical Mechanics	8vo,	4 00
Merrill's Stones for Building and Decoration	8vo,	5 00
Merriman's Mechanics of Materials	8vo,	5 00
* Strength of Materials	12mo,	1 00
Metcalf's Steel. A Manual for Steel-users	12mo,	2 00
Morrison's Highway Engineering	8vo,	2 50
Patton's Practical Treatise on Foundations	8vo,	5 00
Rice's Concrete Block Manufacture	8vo,	2 00
Richardson's Modern Asphalt Pavements	8vo,	3 00
Richey's Handbook for Superintendents of Construction	16mo, mor.	4 00
* Ries's Clays: Their Occurrence, Properties, and Uses	8vo,	5 00
Sabin's Industrial and Artistic Technology of Paints and Varnish	8vo,	3 00
* Schwarz's Longleaf Pine in Virgin Forest	12mo,	1 25
Snow's Principal Species of Wood	8vo,	3 50
Spalding's Hydraulic Cement	12mo,	2 00
Text-book on Roads and Pavements	12mo,	2 00
Taylor and Thompson's Treatise on Concrete, Plain and Reinforced	8vo,	5 00
Thurston's Materials of Engineering. In Three Parts	8vo,	8 00
Part I. Non-metallic Materials of Engineering and Metallurgy	8vo,	2 00
Part II. Iron and Steel	8vo,	3 50
Part III. A Treatise on Brasses, Bronzes, and Other Alloys and their Constituents	8vo,	2 50
Tillson's Street Pavements and Paving Materials	8vo,	4 00
Turneaure and Maurer's Principles of Reinforced Concrete Construction	8vo,	3 00
Waterbury's Cement Laboratory Manual	12mo,	1 00

RAILWAY ENGINEERING.

Andrews's Handbook for Street Railway Engineers	3x5 inches, mor.	1 25
Berg's Buildings and Structures of American Railroads	4to,	5 00
Brooks's Handbook of Street Railroad Location	16mo, mor.	1 50
Butt's Civil Engineer's Field-book	16mo, mor.	2 50
Crandall's Railway and Other Earthwork Tables	8vo,	1 50
Transition Curve	16mo, mor.	1 50
* Crockett's Methods for Earthwork Computations	8vo,	1 50
Dawson's "Engineering" and Electric Traction Pocket-book	16mo. mor.	5 00
Dredge's History of the Pennsylvania Railroad: (1879)	Paper,	5 00
Fisher's Table of Cubic Yards	Cardboard,	25
Godwin's Railroad Engineers' Field-book and Explorers' Guide	16mo, mor.	2 50
Hudson's Tables for Calculating the Cubic Contents of Excavations and Embankments	8vo,	1 00
Ives and Hilts's Problems in Surveying, Railroad Surveying and Geodesy	16mo, mor.	1 50
Molitor and Beard's Manual for Resident Engineers	16mo,	1 00
Nagle's Field Manual for Railroad Engineers	16mo, mor.	3 00
Philbrick's Field Manual for Engineers	16mo, mor.	3 00
Raymond's Railroad Engineering. 3 volumes.		
Vol. I. Railroad Field Geometry. (In Preparation.)		
Vol. II. Elements of Railroad Engineering	8vo,	3 50
Vol. III. Railroad Engineer's Field Book. (In Preparation.)		
Searles's Field Engineering	16mo, mor.	3 00
Railroad Spiral	16mo, mor.	1 50
Taylor's Prismoidal Formulæ and Earthwork	8vo,	1 50
*Trautwine's Field Practice of Laying Out Circular Curves for Railroads.	12mo. mor,	2 50
* Method of Calculating the Cubic Contents of Excavations and Embankments by the Aid of Diagrams	8vo,	2 00
Webb's Economics of Railroad Construction	Large 12mo,	2 50
Railroad Construction	16mo, mor.	5 00
Wellington's Economic Theory of the Location of Railways	Small 8vo,	5 00

DRAWING.

Barr's Kinematics of Machinery	8vo,	2 50
* Bartlett's Mechanical Drawing	8vo,	3 00
* " " " Abridged Ed.	8vo,	1 50
Coolidge's Manual of Drawing	8vo, paper,	1 00
Coolidge and Freeman's Elements of General Drafting for Mechanical Engineers	Oblong 4to,	2 50
Durley's Kinematics of Machines	8vo,	4 00
Emch's Introduction to Projective Geometry and its Applications	8vo,	2 50
Hill's Text-book on Shades and Shadows, and Perspective	8vo,	2 00
Jamison's Advanced Mechanical Drawing	8vo,	2 00
Elements of Mechanical Drawing	8vo,	2 50
Jones's Machine Design:		
Part I. Kinematics of Machinery	8vo,	1 50
Part II. Form, Strength, and Proportions of Parts	8vo,	3 00
MacCord's Elements of Descriptive Geometry	8vo,	3 00
Kinematics; or, Practical Mechanism	8vo,	5 00
Mechanical Drawing	4to,	4 00
Velocity Diagrams	8vo,	1 50
McLeod's Descriptive Geometry	Large 12mo,	1 50
* Mahan's Descriptive Geometry and Stone-cutting	8vo,	1 50
Industrial Drawing. (Thompson.)	8vo,	3 50

McLeod's Descriptive Geometry	Large 12mo,	1 50
* Mahan's Descriptive Geometry and Stone-cutting	8vo,	1 50
Industrial Drawing. (Thompson)	8vo,	3 50
Moyer's Descriptive Geometry	8vo,	2 00
Reed's Topographical Drawing and Sketching	4to,	5 00
Reid's Course in Mechanical Drawing	8vo,	2 00
Text-book of Mechanical Drawing and Elementary Machine Design	8vo,	3 00
Robinson's Principles of Mechanism	8vo,	3 00
Schwamb and Merrill's Elements of Mechanism	8vo,	3 00
Smith's (R. S.) Manual of Topographical Drawing. (McMillan)	8vo,	2 50
Smith (A. W.) and Marx's Machine Design	8vo,	3 00
* Titsworth's Elements of Mechanical Drawing	Oblong 8vo,	1 25
Warren's Drafting Instruments and Operations	12mo,	1 25
Elements of Descriptive Geometry, Shadows, and Perspective	8vo,	3 50
Elements of Machine Construction and Drawing	8vo,	7 50
Elements of Plane and Solid Free-hand Geometrical Drawing	12mo,	1 00
General Problems of Shades and Shadows	8vo,	3 00
Manual of Elementary Problems in the Linear Perspective of Form and Shadow	12mo,	1 00
Manual of Elementary Projection Drawing	12mo,	1 50
Plane Problems in Elementary Geometry	12mo,	1 25
Problems, Theorems, and Examples in Descriptive Geometry	8vo,	2 50
Weisbach's Kinematics and Power of Transmission. (Hermann and Klein)	8vo,	5 00
Wilson's (H. M.) Topographic Surveying	8vo,	3 50
Wilson's (V. T.) Free-hand Lettering	8vo,	1 00
Free-hand Perspective	8vo,	2 50
Woolf's Elementary Course in Descriptive Geometry	Large 8vo.	3 00

ELECTRICITY AND PHYSICS.

* Abegg's Theory of Electrolytic Dissociation. (von Ende)	12mo.	1 25
Andrews's Hand-Book for Street Railway Engineering.	3×5 inches, mor.	1 25
Anthony and Brackett's Text-book of Physics. (Magie)	Large 12mo,	3 00
Anthony's Theory of Electrical Measurements. (Ball)	12mo,	1 00
Benjamin's History of Electricity	8vo,	3 00
Voltaic Cell	8vo,	3 00
Betts's Lead Refining and Electrolysis	8vo,	4 00
Classen's Quantitative Chemical Analysis by Electrolysis. (Boltwood)	8vo,	3 00
* Collins's Manual of Wireless Telegraphy	12mo, Mor.	1 50 2 00
Crehore and Squier's Polarizing Photo-chronograph	8vo,	3 00
* Danneel's Electrochemistry. (Merriam)	12mo,	1 25
Dawson's "Engineering" and Electric Traction Pocket-book	16mo, mor.	5 00
Dolezalek's Theory of the Lead Accumulator (Storage Battery). (von Ende)	12mo,	2 50
Duhem's Thermodynamics and Chemistry. (Burgess)	8vo,	4 00
Flather's Dynamometers, and the Measurement of Power	12mo,	3 00
Gilbert's De Magnete. (Mottelay)	8vo,	2 50
* Hanchett's Alternating Currents	12mo,	1 00
Hering's Ready Reference Tables (Conversion Factors)	16mo, mor.	2 50
* Hobart and Ellis's High-speed Dynamo Electric Machinery	8vo,	6 00
Holman's Precision of Measurements	8vo,	2 00
Telescopic Mirror-scale Method, Adjustments, and Tests	Large 8vo,	75
* Karapetoff's Experimental Electrical Engineering	8vo,	6 00
Kinzbrunner's Testing of Continuous-current Machines	8vo,	2 00
Landauer's Spectrum Analysis. (Tingle)	8vo,	3 00
Le Chatelier's High-temperature Measurements. (Boudouard—Burgess)	12mo,	3 00
Löb's Electrochemistry of Organic Compounds. (Lorenz)	8vo,	3 00
* Lyndon's Development and Electrical Distribution of Water Power	8vo,	3 00

* Lyons's Treatise on Electromagnetic Phenomena. Vols. I. and II.	8vo, each	6 00
* Michie's Elements of Wave Motion Relating to Sound and Light	8vo,	4 00
Morgan's Outline of the Theory of Solution and its Results	12mo,	1 00
* Physical Chemistry for Electrical Engineers	12mo,	1 50
Niaudet's Elementary Treatise on Electric Batteries. (Fishback)	12mo,	2 50
* Norris's Introduction to the Study of Electrical Engineering	8vo,	2 50
* Parshall and Hobart's Electric Machine Design	4to, half mor.	12 50
Reagan's Locomotives: Simple, Compound, and Electric. New Edition.	Large 12mo,	3 50
* Rosenberg's Electrical Engineering. (Haldane Gee — Kinzbrunner)	8vo,	2 00
Ryan, Norris, and Hoxie's Electrical Machinery. Vol. I	8vo,	2 50
Schapper's Laboratory Guide for Students in Physical Chemistry	12mo,	1 00
* Tillman's Elementary Lessons in Heat	8vo,	1 50
Tory and Pitcher's Manual of Laboratory Physics	Large 12mo,	2 00
Ulke's Modern Electrolytic Copper Refining	8vo,	3 00

LAW.

Brennan's Handbook: A Compendium of Useful Legal Information for Business Men	16mo, mor.	5 00
* Davis's Elements of Law	8vo,	2 50
* Treatise on the Military Law of United States	8vo,	7 00
*	Sheep,	7 50
* Dudley's Military Law and the Procedure of Courts-martial	Large 12mo,	2 50
Manual for Courts-martial	16mo, mor.	1 50
Wait's Engineering and Architectural Jurisprudence	8vo,	6 00
	Sheep,	6 50
Law of Contracts	8vo,	3 00
Law of Operations Preliminary to Construction in Engineering and Architecture	8vo,	5 00
	Sheep,	5 50

MATHEMATICS.

Baker's Elliptic Functions	8vo,	1 50
Briggs's Elements of Plane Analytic Geometry. (Bôcher)	12mo,	1 00
* Buchanan's Plane and Spherical Trigonometry	8vo,	1 00
Byerley's Harmonic Functions	8vo,	1 00
Chandler's Elements of the Infinitesimal Calculus	12mo,	2 00
Coffin's Vector Analysis. (In Press.)		
Compton's Manual of Logarithmic Computations	12mo,	1 50
* Dickson's College Algebra	Large 12mo,	1 50
* Introduction to the Theory of Algebraic Equations	Large 12mo,	1 25
Emch's Introduction to Projective Geometry and its Applications	8vo,	2 50
Fiske's Functions of a Complex Variable	8vo,	1 00
Halsted's Elementary Synthetic Geometry	8vo,	1 50
* Elements of Geometry	8vo,	1 75
* Rational Geometry	12mo,	1 50
Hyde's Grassmann's Space Analysis	8vo,	1 00
* Johnson's (J. B.) Three-place Logarithmic Tables: Vest-pocket size, paper,		15
	100 copies,	5 00
*	Mounted on heavy cardboard, 8 × 10 inches,	25
	10 copies,	2 00
Johnson's (W. W.) Abridged Editions of Differential and Integral Calculus	Large 12mo, 1 vol.	2 50
Curve Tracing in Cartesian Co-ordinates	12mo,	1 00
Differential Equations	8vo,	1 00
Elementary Treatise on Differential Calculus	Large 12mo,	1 50
Elementary Treatise on the Integral Calculus	Large 12mo,	1 50
Theoretical Mechanics	12mo,	3 00
Theory of Errors and the Method of Least Squares	12mo,	1 50
Treatise on Differential Calculus	Large 12mo,	3 00

Johnson's Treatise on the Integral Calculus	Large 12mo,	3 00
Treatise on Ordinary and Partial Differential Equations	Large 12mo,	3 50
Karapetoff's Engineering Applications of Higher Mathematics. (In Preparation.)		
Laplace's Philosophical Essay on Probabilities. (Truscott and Emory)	12mo,	2 00
* Ludlow and Bass's Elements of Trigonometry and Logarithmic and Other Tables	8vo,	3 00
Trigonometry and Tables published separately	Each,	2 00
* Ludlow's Logarithmic and Trigonometric Tables	8vo,	1 00
Macfarlane's Vector Analysis and Quaternions	8vo,	1 00
McManon's Hyperbolic Functions	8vo,	1 00
Manning's Irrational Numbers and their Representation by Sequences and Series	12mo,	1 25
Mathematical Monographs. Edited by Mansfield Merriman and Robert S. Woodward.	Octavo, each	1 00
No. 1. History of Modern Mathematics, by David Eugene Smith. No. 2. Synthetic Projective Geometry, by George Bruce Halsted. No. 3. Determinants, by Laenas Gifford Weld. No. 4. Hyperbolic Functions, by James McMahon. No. 5. Harmonic Functions, by William E. Byerly. No. 6. Grassmann's Space Analysis, by Edward W. Hyde. No. 7. Probability and Theory of Errors, by Robert S. Woodward. No. 8. Vector Analysis and Quaternions, by Alexander Macfarlane. No. 9. Differential Equations, by William Woolsey Johnson. No. 10. The Solution of Equations, by Mansfield Merriman. No. 11. Functions of a Complex Variable, by Thomas S. Fiske.		
Maurer's Technical Mechanics	8vo,	4 00
Merriman's Method of Least Squares	8vo,	2 00
Solution of Equations	8vo,	1 00
Rice and Johnson's Differential and Integral Calculus. 2 vols. in one.	Large 12mo,	1 50
Elementary Treatise on the Differential Calculus	Large 12mo,	3 00
Smith's History of Modern Mathematics	8vo,	1 00
* Veblen and Lennes's Introduction to the Real Infinitesimal Analysis of One Variable	8vo,	2 00
* Waterbury's Vest Pocket Hand-Book of Mathematics for Engineers.	$2\frac{7}{8}\times 5\frac{3}{8}$ inches, mor.	1 00
Weld's Determinations	8vo,	1 00
Wood's Elements of Co-ordinate Geometry	8vo,	2 00
Woodward's Probability and Theory of Errors	8vo,	1 00

MECHANICAL ENGINEERING.

MATERIALS OF ENGINEERING, STEAM-ENGINES AND BOILERS.

Bacon's Forge Practice	12mo,	1 50
Baldwin's Steam Heating for Buildings	12mo,	2 50
Bair's Kinematics of Machinery	8vo,	2 50
* Bartlett's Mechanical Drawing	8vo,	3 00
* " " " Abridged Ed.	8vo,	1 50
Benjamin's Wrinkles and Recipes	12mo,	2 00
* Burr's Ancient and Modern Engineering and the Isthmian Canal	8vo,	3 50
Carpenter's Experimental Engineering	8vo,	6 00
Heating and Ventilating Buildings	8vo,	4 00
Clerk's Gas and Oil Engine	Large 12mo,	4 00
Compton's First Lessons in Metal Working	12mo,	1 50
Compton and De Groodt's Speed Lathe	12mo,	1 50
Coolidge's Manual of Drawing	8vo, paper,	1 00
Coolidge and Freeman's Elements of General Drafting for Mechanical Engineers	Oblong 4to,	2 50

Cromwell's Treatise on Belts and Pulleys	12mo,	1 50
Treatise on Toothed Gearing	12mo,	1 50
Durley's Kinematics of Machines	8vo,	4 00
Flather's Dynamometers and the Measurement of Power	12mo,	3 00
Rope Driving	12mo,	2 00
Gill's Gas and Fuel Analysis for Engineers	12mo,	1 25
Goss's Locomotive Sparks	8vo,	2 00
Greene's Pumping Machinery. (In Preparation.)		
Hering's Ready Reference Tables (Conversion Factors)	16mo, mor.	2 50
* Hobart and Ellis's High Speed Dynamo Electric Machinery	8vo,	6 00
Hutton's Gas Engine	8vo,	5 00
Jamison's Advanced Mechanical Drawing	8vo,	2 00
Elements of Mechanical Drawing	8vo,	2 50
Jones's Gas Engine. (In Press.)		
Machine Design:		
Part I. Kinematics of Machinery	8vo,	1 50
Part II. Form, Strength, and Proportions of Parts	8vo,	3 00
Kent's Mechanical Engineers' Pocket-book	16mo, mor.	5 00
Kerr's Power and Power Transmission	8vo,	2 00
Leonard's Machine Shop Tools and Methods	8vo,	4 00
* Lorenz's Modern Refrigerating Machinery. (Pope, Haven, and Dean)	8vo,	4 00
MacCord's Kinematics; or, Practical Mechanism	8vo,	5 00
Mechanical Drawing	4to,	4 00
Velocity Diagrams	8vo,	1 50
MacFarland's Standard Reduction Factors for Gases	8vo,	1 50
Mahan's Industrial Drawing. (Thompson)	8vo,	3 50
Oberg's Screw Thread Systems, Taps, Dies, Cutters, and Reamers. (In Press.)		
* Parshall and Hobart's Electric Machine Design	Small 4to, half leather,	12 50
Peele's Compressed Air Plant for Mines	8vo,	3 00
Poole's Calorific Power of Fuels	8vo,	3 00
* Porter's Engineering Reminiscences, 1855 to 1882	8vo,	3 00
Reid's Course in Mechanical Drawing	8vo,	2 00
Text-book of Mechanical Drawing and Elementary Machine Design	8vo,	3 00
Richard's Compressed Air	12mo,	1 50
Robinson's Principles of Mechanism	8vo,	3 00
Schwamb and Merrill's Elements of Mechanism	8vo,	3 00
Smith's (O.) Press-working of Metals	8vo,	3 00
Smith (A. W.) and Marx's Machine Design	8vo,	3 00
Sorel's Carbureting and Combustion in Alcohol Engines. (Woodward and Preston).	Large 12mo,	3 00
Thurston's Animal as a Machine and Prime Motor, and the Laws of Energetics.	12mo,	1 00
Treatise on Friction and Lost Work in Machinery and Mill Work	8vo,	3 00
Tillson's Complete Automobile Instructor	16mo,	1 50
	mor.	2 00
Titsworth's Elements of Mechanical Drawing	Oblong 8vo,	1 25
Warren's Elements of Machine Construction and Drawing	8vo,	7 50
* Waterbury's Vest Pocket Hand Book of Mathematics for Engineers.	2⅞×5⅜ inches, mor.	1 00
Weisbach's Kinematics and the Power of Transmission. (Herrmann—Klein)	8vo,	5 00
Machinery of Transmission and Governors. (Herrmann—Klein)	8vo,	5 00
Wood's Turbines	8vo,	2 50

MATERIALS OF ENGINEERING

* Bovey's Strength of Materials and Theory of Structures	8vo,	7 50
Burr's Elasticity and Resistance of the Materials of Engineering	8vo,	7 50
Church's Mechanics of Engineering	8vo,	6 00
* Greene's Structural Mechanics	8vo,	2 50

Holley and Ladd's Analysis of Mixed Paints, Color Pigments, and Varnishes.	Large 12mo,	2 50
Johnson's Materials of Construction	8vo,	6 00
Keep's Cast Iron	8vo,	2 50
Lanza's Applied Mechanics	8vo,	7 50
Maire's Modern Pigments and their Vehicles	12mo,	2 00
Martens's Handbook on Testing Materials. (Henning)	8vo,	7 50
Maurer's Technical Mechanics	8vo,	4 00
Merriman's Mechanics of Materials	8vo,	5 00
* Strength of Materials	12mo,	1 00
Metcalf's Steel. A Manual for Steel-users	12mo,	2 00
Sabin's Industrial and Artistic Technology of Paints and Varnish	8vo,	3 00
Smith's Materials of Machines	12mo,	1 00
Thurston's Materials of Engineering	3 vols., 8vo,	8 00
Part I. Non-metallic Materials of Engineering and Metallurgy	8vo,	2 00
Part II. Iron and Steel	8vo,	3 50
Part III. A Treatise on Brasses, Bronzes, and Other Alloys and their Constituents	8vo,	2 50
Wood's (De V.) Elements of Analytical Mechanics	8vo,	3 00
Treatise on the Resistance of Materials and an Appendix on the Preservation of Timber	8vo,	2 00
Wood's (M. P.) Rustless Coatings: Corrosion and Electrolysis of Iron and Steel	8vo,	4 00

STEAM-ENGINES AND BOILERS.

Berry's Temperature-entropy Diagram	12mo,	1 25
Carnot's Reflections on the Motive Power of Heat. (Thurston)	12mo,	1 50
Chase's Art of Pattern Making	12mo,	2 50
Creighton's Steam-engine and other Heat-motors	8vo,	5 00
Dawson's "Engineering" and Electric Traction Pocket-book	16mo, mor.	5 00
Ford's Boiler Making for Boiler Makers	18mo,	1 00
*Gebhardt's Steam Power Plant Engineering	8vo,	6 00
Goss's Locomotive Performance	8vo,	5 00
Hemenway's Indicator Practice and Steam-engine Economy	12mo,	2 00
Hutton's Heat and Heat-engines	8vo.	5 00
Mechanical Engineering of Power Plants	8vo,	5 00
Kent's Steam boiler Economy	8vo,	4 00
Kneass's Practice and Theory of the Injector	8vo,	1 50
MacCord's Slide-valves	8vo,	2 00
Meyer's Modern Locomotive Construction	4to,	10 00
Moyer's Steam Turbines. (In Press.)		
Peabody's Manual of the Steam-engine Indicator	12mo,	1 50
Tables of the Properties of Saturated Steam and Other Vapors	8vo,	1 00
Thermodynamics of the Steam-engine and Other Heat-engines	8vo,	5 00
Valve-gears for Steam-engines	8vo,	2 50
Peabody and Miller's Steam-boilers	8vo,	4 00
Pray's Twenty Years with the Indicator	Large 8vo,	2 50
Pupin's Thermodynamics of Reversible Cycles in Gases and Saturated Vapors. (Osterberg)	12mo,	1 25
Reagan's Locomotives. Simple, Compound, and Electric. New Edition.	Large 12mo,	3 50
Sinclair's Locomotive Engine Running and Management	12mo,	2 00
Smart's Handbook of Engineering Laboratory Practice	12mo,	2 50
Snow's Steam-boiler Practice	8vo,	3 00
Spangler's Notes on Thermodynamics	12mo,	1 00
Valve-gears	8vo,	2 50
Spangler, Greene, and Marshall's Elements of Steam-engineering	8vo,	3 00
Thomas's Steam-turbines	8vo,	4 00

Thurston's Handbook of Engine and Boiler Trials, and the Use of the Indicator and the Prony Brake.	**8vo,**	**5 00**
Handy Tables.	**8vo,**	**1 50**
Manual of Steam-boilers, their Designs, Construction, and Operation.	**8vo,**	**5 00**
Thurston's Manual of the Steam-engine.	**2 vols., 8vo,**	**10 00**
Part I. History, Structure, and Theory.	**8vo,**	**6 00**
Part II. Design, Construction, and Operation.	**8vo,**	**6 00**
Steam-boiler Explosions in Theory and in Practice.	**12mo,**	**1 50**
Wehrenfenning's Analysis and Softening of Boiler Feed-water (Patterson)	**8vo,**	**4 00**
Weisbach's Heat, Steam, and Steam-engines. (Du Bois)	**8vo,**	**5 00**
Whitham's Steam-engine Design.	**8vo,**	**5 00**
Wood's Thermodynamics, Heat Motors, and Refrigerating Machines	**8vo,**	**4 00**

MECHANICS PURE AND APPLIED.

Church's Mechanics of Engineering.	**8vo,**	**6 00**
Notes and Examples in Mechanics.	**8vo,**	**2 00**
Dana's Text-book of Elementary Mechanics for Colleges and Schools	**12mo,**	**1 50**
Du Bois's Elementary Principles of Mechanics:		
Vol. I. Kinematics.	**8vo,**	**3 50**
Vol. II. Statics.	**8vo,**	**4 00**
Mechanics of Engineering. Vol. I.	**Small 4to,**	**7 50**
Vol. II.	**Small 4to,**	**10 00**
*** Greene's Structural Mechanics.**	**8vo,**	**2 50**
James's Kinematics of a Point and the Rational Mechanics of a Particle.	**Large 12mo,**	**2 00**
*** Johnson's (W. W.) Theoretical Mechanics.**	**12mo.**	**3 00**
Lanza's Applied Mechanics.	**8vo,**	**7 50**
*** Martin's Text Book on Mechanics, Vol. I, Statics.**	**12mo,**	**1 25**
*** Vol. 2, Kinematics and Kinetics**	**12mo,**	**1 50**
Maurer's Technical Mechanics.	**8vo,**	**4 00**
*** Merriman's Elements of Mechanics.**	**12mo,**	**1 00**
Mechanics of Materials.	**8vo,**	**5 00**
*** Michie's Elements of Analytical Mechanics.**	**8vo,**	**4 00**
Robinson's Principles of Mechanism.	**8vo,**	**3 00**
Sanborn's Mechanics Problems	**Large 12mo,**	**1 50**
Schwamb and Merrill's Elements of Mechanism.	**8vo,**	**3 00**
Wood's Elements of Analytical Mechanics.	**8vo,**	**3 00**
Principles of Elementary Mechanics.	**12mo,**	**1 25**

MEDICAL.

*** Abderhalden's Physiological Chemistry in Thirty Lectures. (Hall and Defren)**	**8vo,**	**5 00**
von Behring's Suppression of Tuberculosis. (Bolduan)	**12mo,**	**1 00**
*** Bolduan's Immune Sera**	**12mo,**	**1 50**
Bordet's Contribution to Immunity. (Gay). (In Preparation.)		
Davenport's Statistical Methods with Special Reference to Biological Variations.	**16mo, mor.**	**1 50**
Ehrlich's Collected Studies on Immunity. (Bolduan)	**8vo,**	**6 00**
*** Fischer's Physiology of Alimentation.**	**Large 12mo, cloth,**	**2 00**
de Fursac's Manual of Psychiatry. (Rosanoff and Collins)	**Large 12mo,**	**2 50**
Hammarsten's Text-book on Physiological Chemistry. (Mandel)	**8vo,**	**4 00**
Jackson's Directions for Laboratory Work in Physiological Chemistry	**8vo,**	**1 25**
Lassar-Cohn's Practical Urinary Analysis. (Lorenz)	**12mo,**	**1 00**
Mandel's Hand Book for the Bio-Chemical Laboratory	**12mo,**	**1 50**
*** Pauli's Physical Chemistry in the Service of Medicine. (Fischer)**	**12mo,**	**1 25**
*** Pozzi-Escot's Toxins and Venoms and their Antibodies. (Cohn)**	**12mo,**	**1 00**
Rostoski's Serum Diagnosis. (Bolduan)	**12mo,**	**1 00**
Ruddiman's Incompatibilities in Prescriptions	**8vo,**	**2 00**
Whys in Pharmacy	**12mo,**	**1 00**

Salkowski's Physiological and Pathological Chemistry. (Orndorff.)	8vo,	2 50
* Satterlee's Outlines of Human Embryology	12mo.	1 25
Smith's Lecture Notes on Chemistry for Dental Students	8vo,	2 50
Steel's Treatise on the Diseases of the Dog	8vo,	3 50
* Whipple's Typhoid Fever	Large 12mo,	3 00
Woodhull's Notes on Military Hygiene	16mo,	1 50
* Personal Hygiene	12mo,	1 00
Worcester and Atkinson's Small Hospitals Establishment and Maintenance, and Suggestions for Hospital Architecture, with Plans for a Small Hospital	12mo,	1 25

METALLURGY.

Betts's Lead Refining by Electrolysis	8vo,	4 00
Bolland's Encyclopedia of Founding and Dictionary of Foundry Terms Used in the Practice of Moulding	12mo,	3 00
Iron Founder	12mo,	2 50
" " Supplement	12mo,	2 50
Douglas's Untechnical Addresses on Technical Subjects	12mo,	1 00
Goesel's Minerals and Metals: A Reference Book	16mo, mor.	3 00
* Iles's Lead-smelting	12mo,	2 50
Keep's Cast Iron	8vo,	2 50
Le Chatelier's High-temperature Measurements. (Boudouard—Burgess)	12mo,	3 00
Metcalf's Steel. A Manual for Steel-users	12mo,	2 00
Miller's Cyanide Process	12mo,	1 00
Minet's Production of Aluminium and its Industrial Use. (Waldo)	12mo,	2 50
Robine and Lenglen's Cyanide Industry. (Le Clerc)	8vo,	4 00
Ruer's Elements of Metallography. (Mathewson) (In Press.)		
Smith's Materials of Machines	12mo,	1 00
Tate and Stone's Foundry Practice. (In Press.)		
Thurston's Materials of Engineering. In Three Parts	8vo,	8 00
Part I. Non-metallic Materials of Engineering and Metallurgy	8vo,	2 00
Part II. Iron and Steel	8vo,	3 50
Part III. A Treatise on Brasses, Bronzes, and Other Alloys and their Constituents	8vo,	2 50
Ulke's Modern Electrolytic Copper Refining	8vo,	3 00
West's American Foundry Practice	12mo,	2 50
Moulder's Text Book	12mo,	2 50
Wilson's Chlorination Process	12mo,	1 50
Cyanide Processes	12mo,	1 50

MINERALOGY.

Barringer's Description of Minerals of Commercial Value	Oblong, mor.	2 50
Boyd's Resources of Southwest Virginia	8vo,	3 00
Boyd's Map of Southwest Virginia	Pocket-book form.	2 00
* Browning's Introduction to the Rarer Elements	8vo,	1 50
Brush's Manual of Determinative Mineralogy. (Penfield)	8vo,	4 00
Butler's Pocket Hand-Book of Minerals	16mo, mor.	3 00
Chester's Catalogue of Minerals	8vo, paper,	1 00
	Cloth,	1 25
* Crane's Gold and Silver	8vo,	5 00
Dana's First Appendix to Dana's New "System of Mineralogy.."	Large 8vo,	1 00
Manual of Mineralogy and Petrography	12mo	2 00
Minerals and How to Study Them	12mo,	1 50
System of Mineralogy	Large 8vo, half leather,	12 50
Text-book of Mineralogy	8vo,	4 00
Douglas's Untechnical Addresses on Technical Subjects	12mo,	1 00
Eakle's Mineral Tables	8vo,	1 25
Stone and Clay Products Used in Engineering. (In Preparation.)		

Egleston's Catalogue of Minerals and Synonyms	8vo,	2 50
Goesel's Minerals and Metals: A Reference Book	16mo mor.	3 00
Groth's Introduction to Chemical Crystallography (Marshall)	12mo,	1 25
*** Iddings's Rock Minerals**	8vo,	5 00
Johannsen's Determination of Rock-forming Minerals in Thin Sections	8vo,	4 00
* Martin's Laboratory Guide to Qualitative Analysis with the Blowpipe.	12mo,	60
Merrill's Non-metallic Minerals: Their Occurrence and Uses	8vo,	4 00
Stones for Building and Decoration	8vo,	5 00
*** Penfield's Notes on Determinative Mineralogy and Record of Mineral Tests.**	8vo, paper,	50
Tables of Minerals, Including the Use of Minerals and Statistics of Domestic Production	8vo,	1 00
*** Pirsson's Rocks and Rock Minerals**	12mo,	2 50
*** Richards's Synopsis of Mineral Characters**	12mo, mor.	1 25
*** Ries's Clays: Their Occurrence, Properties, and Uses**	8vo,	5 00
*** Tillman's Text-book of Important Minerals and Rocks**	8vo,	2 00

MINING.

*** Beard's Mine Gases and Explosions**	Large 12mo,	3 00
Boyd's Map of Southwest Virginia	Pocket-book form,	2 00
Resources of Southwest Virginia	8vo,	3 00
*** Crane's Gold and Silver**	8vo,	5 00
Douglas's Untechnical Addresses on Technical Subjects	12mo.	1 00
Eissler's Modern High Explosives	8vo,	4 00
Goesel's Minerals and Metals: A Reference Book	16mo, mor.	3 00
Ihlseng's Manual of Mining	8vo,	5 00
* Iles's Lead-smelting	12mo,	2 50
Miller's Cyanide Process	12mo,	1 00
O'Driscoll's Notes on the Treatment of Gold Ores	8vo,	2 00
Peele's Compressed Air Plant for Mines	8vo,	3 00
Riemer's Shaft Sinking Under Difficult Conditions. (Corning and Peele)	8vo,	3 00
Robine and Lenglen's Cyanide Industry. (Le Clerc)	8vo,	4 00
* Weaver's Military Explosives	8vo,	3 00
Wilson's Chlorination Process	12mo,	1 50
Cyanide Processes	12mo,	1 50
Hydraulic and Placer Mining. 2d edition, rewritten	12mo,	2 50
Treatise on Practical and Theoretical Mine Ventilation	12mo,	1 25

SANITARY SCIENCE.

Association of State and National Food and Dairy Departments, Hartford Meeting, 1906	8vo,	3 00
Jamestown Meeting, 1907	8vo,	3 00
* Bashore's Outlines of Practical Sanitation	12mo,	1 25
Sanitation of a Country House	12mo,	1 00
Sanitation of Recreation Camps and Parks	12mo,	1 00
Folwell's Sewerage. (Designing, Construction, and Maintenance)	8vo,	3 00
Water-supply Engineering	8vo,	4 00
Fowler's Sewage Works Analyses	12mo,	2 00
Fuertes's Water-filtration Works	12mo,	2 50
Water and Public Health	12mo,	1 50
Gerhard's Guide to Sanitary House-inspection	16mo,	1 00
* Modern Baths and Bath Houses	8vo,	3 00
Sanitation of Public Buildings	12mo,	1 50
Hazen's Clean Water and How to Get It	Large 12mo,	1 50
Filtration of Public Water-supplies	8vo,	3 00
Kinnicut, Winslow and Pratt's Purification of Sewage. (In Press.)		
Leach's Inspection and Analysis of Food with Special Reference to State Control	8vo,	7 00

Mason's Examination of Water. (Chemical and Bacteriological)	12mo,	1 25
Water-supply. (Considered Principally from a Sanitary Standpoint)	8vo,	4 00
* Merriman's Elements of Sanitary Engineering	8vo,	2 00
Ogden's Sewer Design	12mo,	2 00
Parsons's Disposal of Municipal Refuse	8vo,	2 00
Prescott and Winslow's Elements of Water Bacteriology, with Special Reference to Sanitary Water Analysis	12mo,	1 50
* Price's Handbook on Sanitation	12mo,	1 50
Richards's Cost of Cleanness. A Twentieth Century Problem	12mo,	1 00
Cost of Food. A Study in Dietaries	12mo,	1 00
Cost of Living as Modified by Sanitary Science	12mo,	1 00
Cost of Shelter. A Study in Economics	12mo,	1 00
* Richards and Williams's Dietary Computer	8vo,	1 50
Richards and Woodman's Air, Water, and Food from a Sanitary Standpoint	8vo,	2 00
Rideal's Disinfection and the Preservation of Food	8vo,	4 00
Sewage and Bacterial Purification of Sewage	8vo,	4 00
Soper's Air and Ventilation of Subways	Large 12mo,	2 50
Turneaure and Russell's Public Water-supplies	8vo,	5 00
Venable's Garbage Crematories in America	8vo,	2 00
Method and Devices for Bacterial Treatment of Sewage	8vo,	3 00
Ward and Whipple's Freshwater Biology	12mo,	2 50
Whipple's Microscopy of Drinking-water	8vo,	3 50
* Typhod Fever	Large 12mo,	3 00
Value of Pure Water	Large 12mo,	1 00
Winslow's Bacterial Classification	12mo,	2 50
Winton's Microscopy of Vegetable Foods	8vo,	7 50

MISCELLANEOUS.

Emmons's Geological Guide-book of the Rocky Mountain Excursion of the International Congress of Geologists	Large 8vo,	1 50
Ferrel's Popular Treatise on the Winds	8vo,	4 00
Fitzgerald's Boston Machinist	18mo,	1 00
Gannett's Statistical Abstract of the World	24mo,	75
Haines's American Railway Management	12mo,	2 50
* Hanusek's The Microscopy of Technical Products. (Winton)	8vo,	5 00
Owen's The Dyeing and Cleaning of Textile Fabrics. (Standage). (In Press.)		
Ricketts's History of Rensselaer Polytechnic Institute 1824–1894.	Large 12mo,	3 00
Rotherham's Emphasized New Testament	Large 8vo,	2 00
Standage's Decoration of Wood, Glass, Metal, etc	12mo,	2 00
Thome's Structural and Physiological Botany. (Bennett)	16mo,	2 25
Westermaier's Compendium of General Botany. (Schneider)	8vo,	2 00
Winslow's Elements of Applied Microscopy	12mo,	1 50

HEBREW AND CHALDEE TEXT-BOOKS.

Green's Elementary Hebrew Grammar	12mo,	1 25
Gesenius's Hebrew and Chaldee Lexicon to the Old Testament Scriptures. (Tregelles)	Small 4to, half mor.	5 00