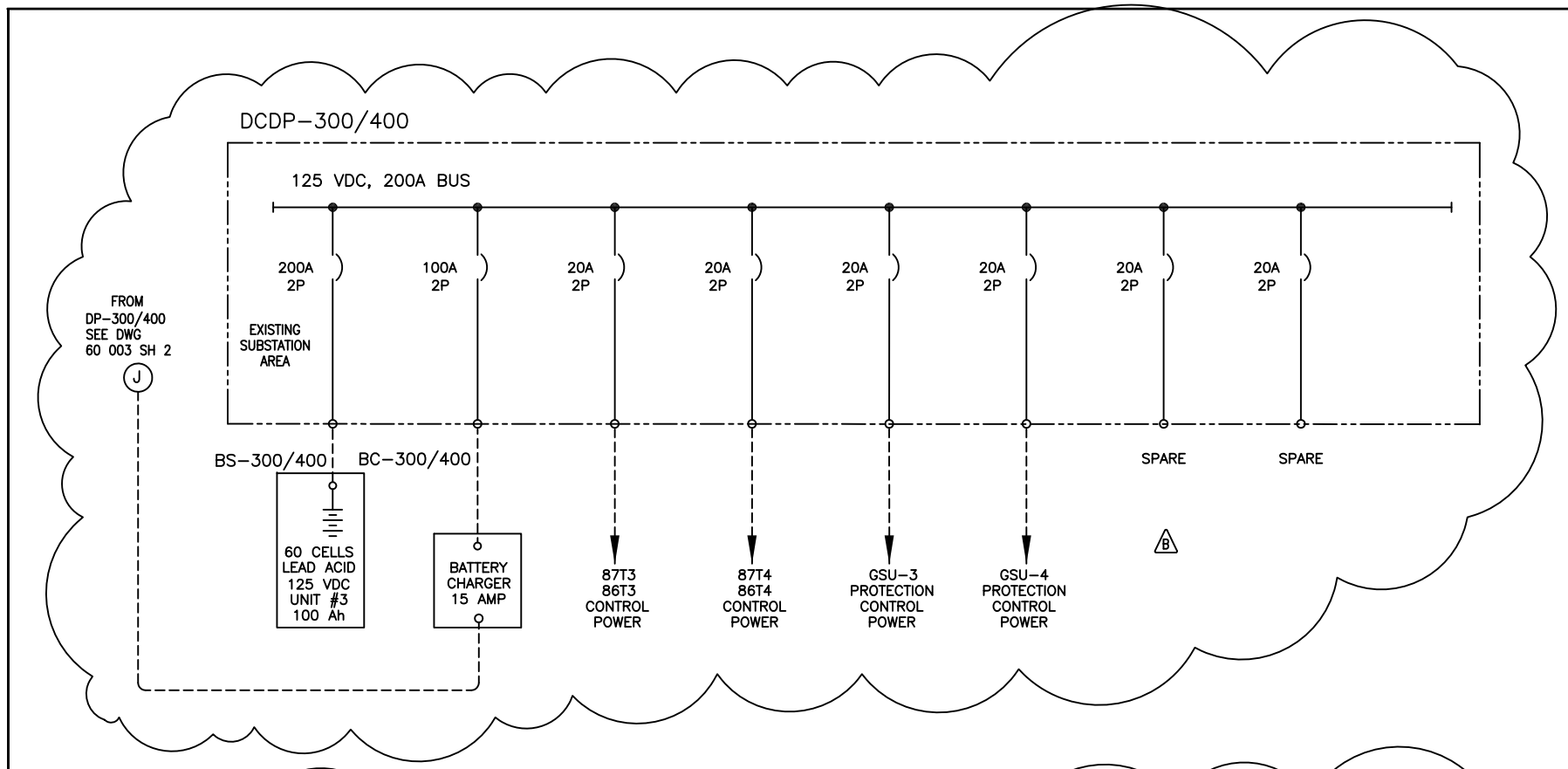

LEGEND:

- COMBINATION STARTER (BREAKER TM WITHOUT OVERLOADS) — STARTER SIZE
- COMBINATION STARTER (BREAKER MCP WITH MOTOR OVER LOADS) — STARTER SIZE
- HOA — HAND–OFF–AUTO SWITCH
- 10 — MOTOR HORSEPOWER (HP)
- R — INDICATING LIGHT COLOR
- TCP — TURBINE CONTROL PANEL
- MOTOR SPACE HEATER
- 50/51 — OVERLOAD RELAY 50 INST 51 TIME
- BREAKER DRAW OUT TYPE
- E.O — BREAKER ELECTRICALLY OPERATED
- M.O — BREAKER MANUALLY OPERATED
- D.O — BREAKER DRAW OUT

asincro c.a.
Ingeniería Integral de Proyectos
J-00087801-3

REVISADO

VER COMENTARIOS

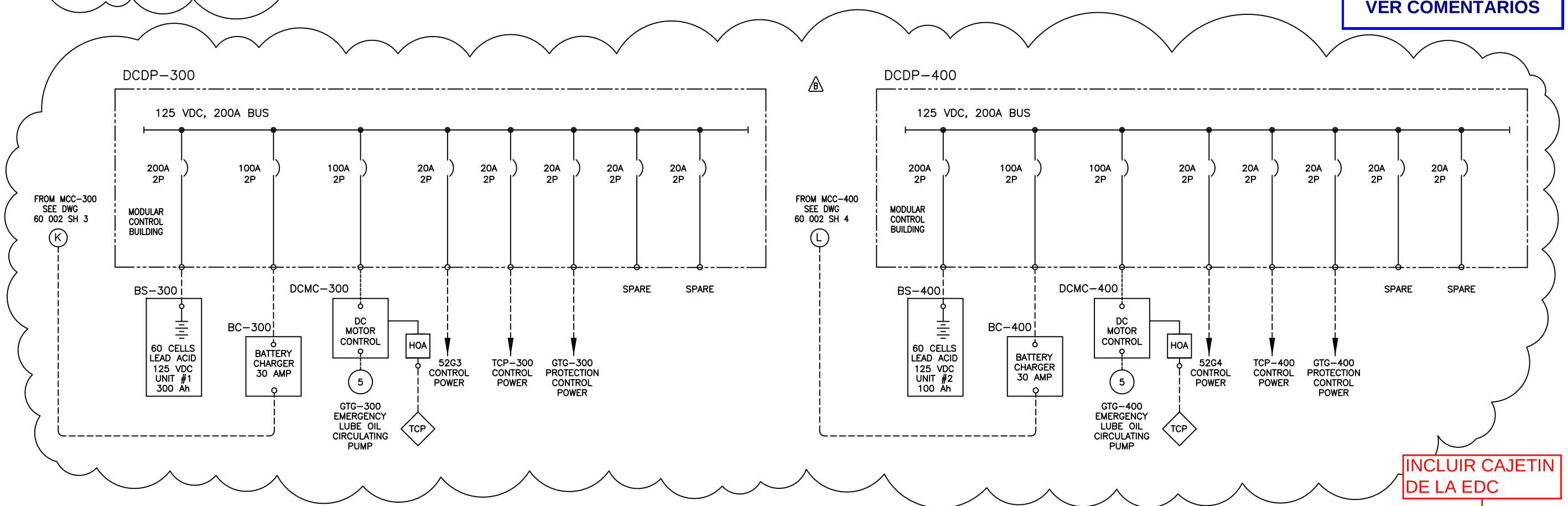

INCLUIR CAJETIN DE LA EDC

REVISED	CUSTOMER INFORMATION

© COPYRIGHT, 2008, ProEnergy SERVICES ALL RIGHTS, RESERVED. THIS DRAWING IS THE PROPRIETARY AND/OR CONFIDENTIAL PROPERTY OF ProEnergy SERVICES AND IS LOANED IN STRICT CONFIDENCE WITH THE UNDERSTANDING THAT IT WILL NOT BE REPRODUCED NOR USED FOR ANY PURPOSE EXCEPT THAT FOR WHICH IT IS LOANED. IT SHALL BE IMMEDIATELY RETURNED ON DEMAND, AND IS SUBJECT TO ALL OTHER TERMS AND CONDITIONS OF ANY WRITTEN AGREEMENT OR PURCHASE ORDER WHICH INCORPORATES OR RELATES TO THIS DRAWING.

NO.	DATE	BY	APP'D	DESCRIPTION
B	07/30/09	BLA		REVISE TAG #'S AND UPDATE TITLE BLOCK

REVISIONS

DRAWN	REB	07/01/09
CHECK		
DESIGN	RS	07/01/09
PROJ ENGR		
PROJ MGR		
QA MGR		
SCALE	NONE	SIZE D

ProEnergy EPC SERVICES

907 S DETROIT
SUITE 1140
TULSA, OKLAHOMA 74120
OFFICE 660-829-5100
FAX 918-270-2939
www.proenergyservices.com

ProEnergy EPC Services, LLC

ONE LINE DIAGRAM
DCDP–300/400, DCDP 300 & 400
TACOA POWER PLANT

CARACAS — VENEZUELA

JOB. NO.	DWG NO.	SH NO.	REV
0906	60–005	2	B