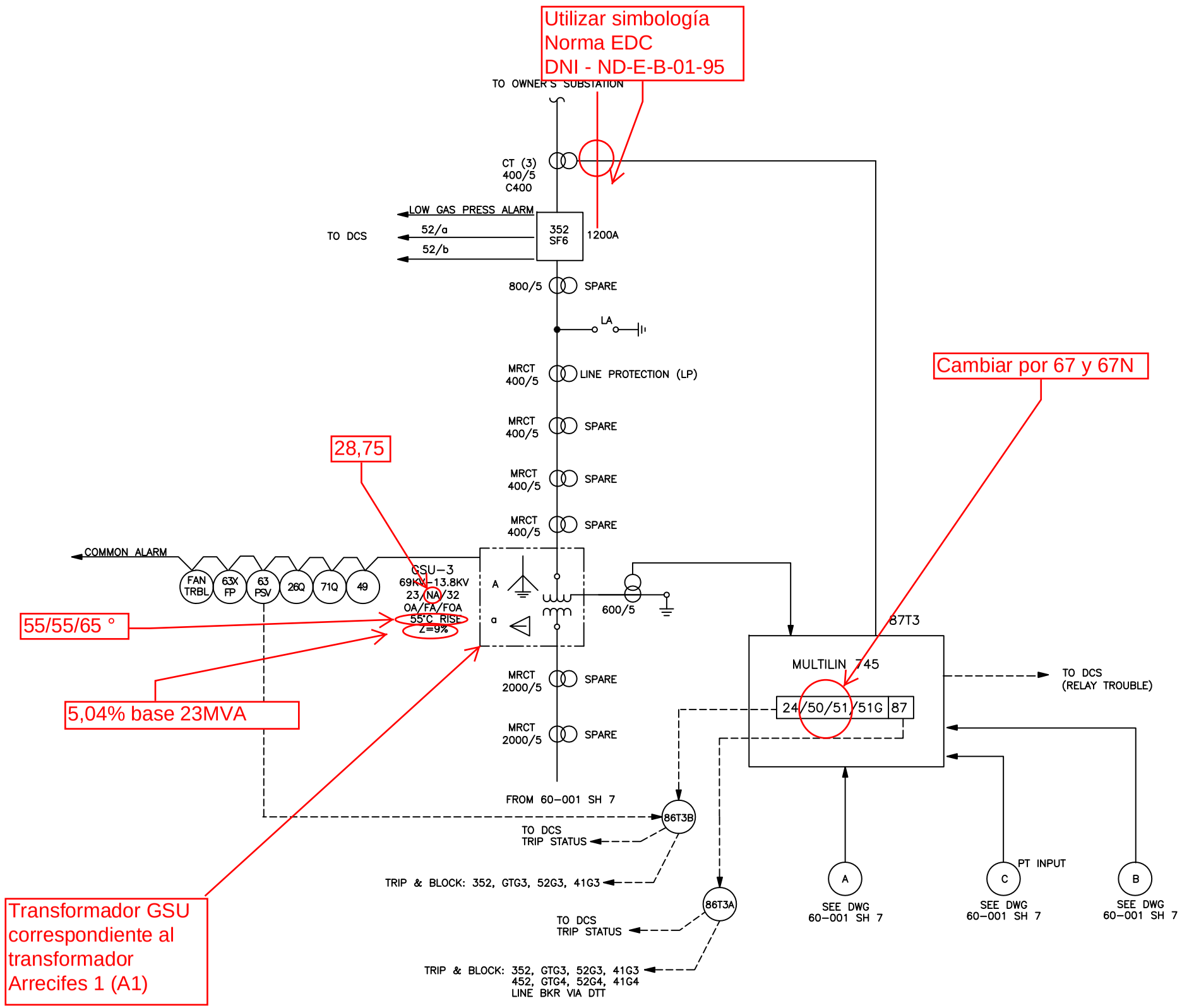

asincro c.a.
Ingeniería Integral de Proyectos

REVISADO

VER COMENTARIOS

INCLUIR CAJETIN
DE LA EDC

NOTE:

TYPICAL CONTROL PANEL
SUPPLIED BY OTHERS

EDG International

REVISED	CUSTOMER INFORMATION

© COPYRIGHT, 2008, ProEnergy SERVICES ALL RIGHTS, RESERVED. THIS DRAWING IS THE PROPRIETARY AND/OR CONFIDENTIAL PROPERTY OF ProEnergy SERVICES AND IS LOANED IN STRICT CONFIDENCE WITH THE UNDERSTANDING THAT IT WILL NOT BE REPRODUCED NOR USED FOR ANY PURPOSE EXCEPT THAT FOR WHICH IT IS LOANED. IT SHALL BE IMMEDIATELY RETURNED ON DEMAND, AND IS SUBJECT TO ALL OTHER TERMS AND CONDITIONS OF ANY WRITTEN AGREEMENT OR PURCHASE ORDER WHICH INCORPORATES OR RELATES TO THIS DRAWING.

NO.	DATE	BY	APP'D	DESCRIPTION
				REVISIONS

DRAWN	BLA	08/05/09
CHECK		
DESIGN	NA	08/05/09
PROJ ENGR		
PROJ MGR		
QA MGR		
SCALE	NONE	SIZE D

ProEnergy EPC SERVICES

907 S DETROIT
SUITE 1140
TULSA, OKLAHOMA 74120
OFFICE 660-829-5100
FAX 918-270-2939
www.proenergyservices.com

ProEnergy EPC Services, LLC

ONE LINE DIAGRAM
GSU-3 & 87T3 RELAY
TACOA POWER PLANT

CARACAS — VENEZUELA

JOB. NO.	DWG NO.	SH NO.	REV
0906	60-001	8	A