A Stealth Satellite Sourcebook

Version of 2006-10-20

Additional material for this sourcebook would be appreciated.
Please send it to Allen Thomson, thomsona@flash.net

The ordering of entries in this sourcebook is intended to be roughly chronological. Preference is given to the dates of the events reported in the entries when they can be determined, not necessarily to the dates on which the entries were written or published. In the case of patents, the date used is that of the original filing, not the date on which the patent was granted.

Technical note and acknowledgment: This document is maintained in Open Office Writer; PDF versions for distribution are produced using PrimoPDF.

Feb. 1, 1966 W. C. BARKER 3,233,238

RADAR CAMOUFLAGE ARRANGEMENT

Filed June 5, 1962

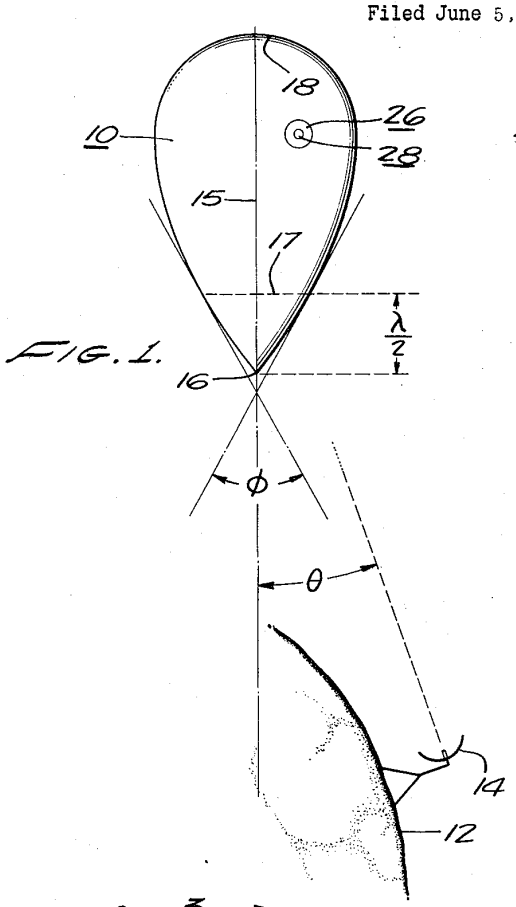

FIG. 1.

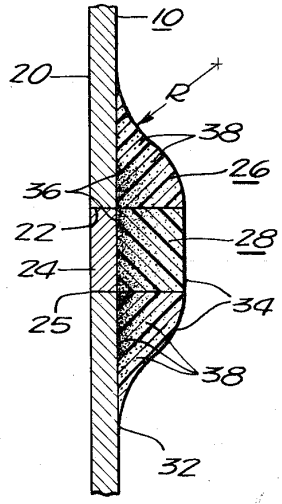

FIG. 3.

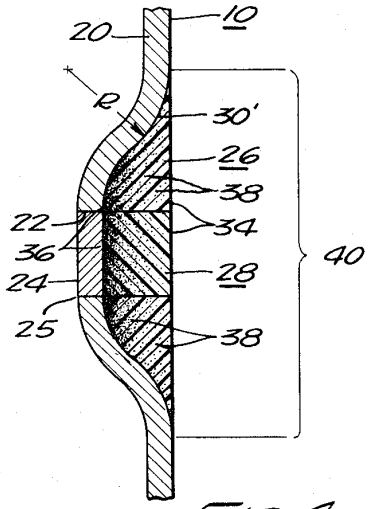

FIG. 4

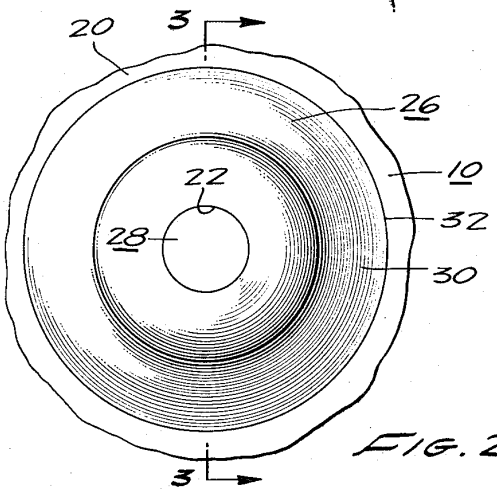

FIG. 2.

WILLIAM C. BARKER
INVENTOR.

BY David P. Oglen

ATTORNEY

United States Patent Office

3,233,238

Patented Feb. 1, 1966

1

3,233,238
RADAR CAMOUFLAGE ARRANGEMENT

William C. Barker, Pacific Palisades, Calif., assignor to The Aerospace Corporation, Los Angeles, Calif., a corporation of California

Filed June 5, 1962, Ser. No. 200,902
7 Claims. (Cl. 343—18)

The present invention relates to space vehicles, and more particularly to the art of reducing to a minimum radar reflection from space vehicles.

It is presently known that space vehicles constructed in a configuration electromagnetically equivalent to an infinite conducting cone can provide a radar reflection area (scatter cross section) of the order of a square centimeter, depending upon the frequency of the illuminating radar, the angle at the cone apex, and the reflections due to first or second order discontinuities in the vehicle surface structure when radar signals impinge thereon along the axis of the cone. This phenomenon remains substantially the same for radar signals as much as 40° to 60° from the axis of the cone so long as the front portion of the cone has a radius of curvature not greater than one-quarter inch. Moreover, this phenomenon is modified only slightly if the cone, instead of being infinite, is large compared to radar wavelengths and is terminated by a hemisphere-like rear end portion so long as the meeting of the curves is relatively smooth in both the first and second derivatives. If the apex angle of the cone is 52° the minimum signal obtainable is of the order of 10^{-4} square meters. At about 30° this reflection is reduced by one order of magnitude, and at about 16° the signal is reduced another order of magnitude. In practice this order of reflective signal is so small that irregularities and discontinuities in rearward portions of the vehicle will control the magnitude of the reflected signal.

However, in large space vehicles of the type where this phenomenon is of particular value, practical usage will require discontinuities for ports of various types such as communication ports, personnel entrances and cargo-loading ports. Such ports of necessity will provide electrical discontinuities in the surfaces which are dissipating the radar signals. These discontinuities tend to generate reflected signals which destroy the radar invisibility of the craft.

Therefore, an object of the present invention is to provide an arrangement for preventing reflection of signals from port hole discontinuities.

According to one embodiment of my invention, the surface surrounding a necessary port of a space craft is provided with a lossy dielectric material in proximity therewith. The lossiness of this material is sequentially increased or tapered so that at its initial contact with the surface farthest from the port it has very nearly the same impedance and loss characteristics as free space, while its lossy property juxtaposed to the port will completely dissipate any traveling waves. Moreover, the thickness of this lossy material is also tapered to be initially of the order of a few microns in thickness and finally of the order of two wavelengths of the minimum frequency that can be effectively used to detect the space vehicle from earth based radars. The consistency of this lossy washer is further controlled in that its outer surface is of relatively low lossy properties, while its base surface is very lossy. Such a washer surrounding a port, either open or closed, will dissipate traveling surface waves created by radar impingement elsewhere on the vehicle and prevent any reflection because of the discontinuity at the port. Furthermore, when such a port is closed and filled by a plug having the same lossy characteristics as those of the thick portion of the washer

2

where it is juxtaposed to the plug, then the washer plus plug combination will prevent directly incident radar waves from being reflected at the port discontinuity.

The subject matter which is regarded as this invention is particularly pointed out and distinctly claimed in the concluding portion of this specification. The invention, however, as to its organization and operation, together with further objects and advantages thereof, will best be understood to reference to the following description taken in connection with the accompanying drawing in which:

FIG. 1 shows schematic plan view of a space craft arranged to be substantially invisible to radar signals impinging upon its forward end;

FIG. 2 is an enlarged plan view of a port arrangement shown in FIG. 1;

FIG. 3 shows schematic cross-sectional view taken along line 3—3 of FIG. 2 to illustrate the port arrangement of the present invention; and

FIG. 4 illustrates in cross-section another embodiment of my invention.

Referring now to the drawing wherein like numbers designate similar parts, a space craft **10** is positioned above the earth **12** at an altitude of the order of 500 miles or more. As a result, search radar signals from an antenna system **14** will impinge upon the space craft **10** at incident angles θ less than the critical value whereby the reflection from the space craft **10** will be similar to that of an infinite conducting cone receiving radar signals along its axis illustrated by the space craft axis **15**.

In order to take full advantage of the invisibility phenomenon of an infinite cone, the apex **16** has a radius of curvature less than one-quarter inch and is pointed directly toward the earth **12**. Moreover, the effective apex angle, ϕ, is less than 52°, whereby the cross-sectional area of a reflected signal is of the order of 10^{-4} square meters at radar frequencies of 1 kilomegacycle or greater. For the particular applications under consideration utilizing this invention radar frequencies of less than 1 kilomegacycle will not be particularly effective. However, for the purpose of discussion here, I am assuming that radar frequencies as low as 100 megacycles may be used. In either event, the apex angle ϕ is a measure of the angle of intersecting tangents developed from the annular surface, as indicated by a dashed line **17** which is one-half wavelength from the physical apex **16**. Thus, if the apex angle is physically made as large as would be required by other considerations but with the surface curving inwardly from the cone, as illustrated in FIG. 1, then the effective angle, ϕ, will always be less than the physical angle at the apex **16**.

Other problems are apparent in this particular manner of operation. For instance, reverse curves tend to focus search radar signals to increase substantially the reflected signal. Therefore, the vehicle envelope should be a convex surface; also, the curvature should be continuously decreasing over the forward portion of the vehicle. As a result of its convexity, all portions of the space craft **10** will lie within any cone of gyration of a tangent to the surface of the craft. Also, sunlight reflection can be controlled by controlling the space craft attitude within the limits allowed by angle of incidence θ. Furthermore, infrared detection can be controlled by emitting any excess heat from a rear curved portion **18** of the space craft **10**.

For the utilization of the phenomena of radar invisibility of an infinite cone the space craft **10** should have a surface perimeter measured from the apex **16** around the rear curved portion **18** and back to the apex **16** of at least ten wavelengths of the minimum frequency which can be used to detect the space craft **10**. Thus any radar signal must travel over the surface of the space craft for ten wavelengths before again reaching the apex **16** for reradiation.

In traveling such distances substantially all of the surface wave energy will be dissipated. Assuming search radar of a frequency as low as 100 megacycles can accurately penetrate the ionosphere, this would require such a perimeter to be nearly 100 feet or the vehicle length to be about 40 feet or greater. However, it is expected that this invention will be used primarily on manned or other space craft which are much larger than this and have major axial dimensions of the order of 100 feet or more whereby this criterion is easily met.

Moreover, if the whole surface of the space craft **10** is coated with a thin lossy dielectric, incident radar waves will be refracted into the coating and will dissipate somewhat more rapidly. As a result, the present invention can be useful on much smaller space craft. Such a lossy dielectric material can be made of many polymers having many types of lossy fillers. One example of such a system would be a millimeter thick coating of Teflon partially filled with minute particles of carbon. Many other lossy dielectrics are known to those skilled in this art. However, care should be used to prevent any waveguide effect which might occur if the coating approached a quarter wavelength of the highest frequencies used in search radar. Thus the maximum permissible coating thickness is of the order of one-half centimeter.

Referring now to FIGS. 2, 3, and 4 the space craft **10** has a metallic skin **20** surrounding an aperture **22**. This aperture **22** may be a signal information aperture along a side surface of the space craft **10**, as indicated in FIG. 1, or a freight port either on the side or the rear curved portion **18**. Irrespective of the location of the aperture **22**, the door **24** cannot be made in a manner to prevent the occurence of a discontinuity around a circumferential seam **25** thereof. Although physically a tight fit may be accomplished between the aperture **22** and the door **24**, electronically a discontinuity must exist. In order to effectively eliminate the discontinuity of the seam **25**, I have provided a lossy washer **26** surrounding the aperture **22** and a lossy plug **28** covering the door **24**.

In the plan view of FIG. 2, the aperture **22** and the washer **26** are shown as circular. In accordance with the present invention, the taper of the lossy material at the outer edge of the washer **26** is such that its outward radius of curvature R in the outer edge region **30** (FIG. 3) is no less than two wavelengths of the lowest frequency which can accurately probe the location of the space craft **10**.

Assuming a 100 megacycle search radar signal can be used during optimum ionospheric conditions, this radius of curvature should be no less than 20 feet. The outer edge or rim **32** of the washer **26** is arranged to taper electronically to the same impedance as free space. Thus, although I have shown the rim **32** in FIG. 3, it is electronically invisible. When a thin lossy dielectric coating is placed over the metallic skin, that portion of it under the lossy washer **26** will increase in lossiness in the same manner as the base of the lossy washer **26**.

The central portion of the lossy washer **26** in the region of the aperture **22** is constructed to be two wavelengths thick. Since for all practical purposes the minimum reliable radar frequencies usable to search out such space craft are of the order of 1000 megacycles, the thickness of the lossy washer **26** and the lossy plug **28** need be no greater than two feet. However, greater thicknesses will provide additional protection from lower frequency search radar signals.

Additionally, both the lossy plug **28** and the lossy washer **26** provide an increasing lossy characteristic from their outer surfaces **34** toward their inner surfaces **36**. This is usually accomplished by the use of greater amounts of lossy material such as powdered or filamented carbon **38**.

Referring specifically to FIG. 4, the surface **20** of the space craft **10** is provided with a detent region **40** in which the lossy washer **26** and the lossy plug **28** are constructed.

Obviously such an arrangement is preferable from the standpoint of aerodynamics if the door **24** is arranged on a portion of the space craft **10** which is exposed during lift off. However, again care must be taken in connection with the radius of curvature R in the inner edge region **30'** to avoid reflections due to first and second order derivatives discussed above.

In summary, the invisibility of the large space craft **10** is made possible by providing a contour which is substantially equivalent to an infinite conducting cone having a relatively sharp apex **16** and no discontinuities of either first order or second order throughout its surface. This dictates that such a space craft must be relatively large as a function of the lowest radar frequencies which can be reasonably used to detect it. The present invention enhances the utility of such space craft by providing a means of interior access which will not disturb the overall radar invisibility of the vehicle.

While I have shown and described particular embodiments of the present invention, further modifications and improvements will occur to those skilled in this art. For instance, the lossy washer **26** or its equivalent may be arranged with controlled gradient permittivity and dielectric constant properties in combination with lossy contours to obtain a reduced volume of the washer while still preventing any reflections. I desire it understood, therefore, that this invention is not limited to the particular forms shown, and I intend by the appended claims to cover all such modifications which do not depart from the true spirit and scope of my invention.

What I claim is:

1. In combination with a space craft arranged to electronically simulate an infinite conducting cone with respect to frequencies of illuminating radar which may reasonably be expected to impinge thereon, an access port camouflage arrangement, comprising:

a lossy washer surrounding a port and arranged with an outer rim and a central aperture, and having a tapered physical configuration such that the rim has a thickness of the order of a few microns and the aperture has a thickness of the order of at least two wavelength of the illuminating radar with the thickness graduation in the region of the outer edge having a radius of curvature no less than said two wavelengths;

lossy matter partially filling said washer with the loss tangent of the lossy matter being least at the rim and greatest at the inner surface near the aperture;

a lossy plug arranged to substantially fill the aperture of said washer and substantially cover a port door with a uniform thickness of no less than said two wavelengths, and filler matter in said plug being of increased loss tangent only from the outer to the inner surface thereof.

2. In combination with a space craft having a skin surface arranged to electronically simulate an infinite conducting cone with respect to frequencies of illuminating radar which may reasonably be expected to impinge thereon, an access port camouflage arrangement, comprising:

a lossy washer surrounding a port and arranged with an outer rim and a central aperture, and having a tapered physical configuration such that the rim has a thickness of the order of a few microns and the aperture has a thickness of the order of at least two wavelengths of the illuminating radar;

lossy matter partially filling said washer with the loss tangent of the lossy matter being least at the rim and greatest at the inner surface adjacent to the aperture;

a lossy plug arranged to substantially fill the aperture of said washer and substantially cover a port door with a uniform thickness equal to that of the aperture, and filler matter in said plug being of increased lossy gradient only from the outer to the inner surface thereof.

3. In combination with a space craft having a conductive skin surface arranged to electronically simulate an infinite conducting cone with respect to frequencies of illuminating radar which may reasonably be expected to impinge thereon, an access port camouflage arrangement, comprising:

a lossy washer surrounding a port and arranged with an outer rim and a central aperture, and having a tapered physical configuration such that the rim has a thickness of the order of a few microns and the aperture has a thickness which is large compared to the wavelengths of the illuminating radar; and

lossy matter partially filling said washer with the loss tangent of the lossy matter being least at the rim and greatest at the inner surface adjacent to the aperture.

4. In combination with a space craft having a conductive skin surface arranged to electronically simulate an infinite conducting cone with respect to frequencies of illuminating radar which may reasonably be expected to impinge thereon, an access port camouflage arrangement, comprising:

a lossy washer surrounding a port and arranged with an outer rim and a central aperture, and having a tapered physical configuration such that the rim has a thickness of the order of a few microns and the aperture has a substantially greater thickness; and

lossy matter partially filling said lossy washer with the loss tangent of the lossy matter being least at the rim and greatest at the inner surface adjacent to the aperture, said physical configuration being such that no portion of the inner or the outer surface of said lossy washer has a radius of curvature less than said two wavelengths.

5. In combination with a space craft having a conductive skin surface arranged to electronically simulate an infinite conducting cone with respect to frequencies of illuminating radar which may reasonably be expected to impinge thereon, an access port camouflage arrangement, comprising:

a lossy washer surrounding a port and arranged with an outer rim and a central aperture, and having a tapered physical configuration such that the rim has a thickness of the order of a few microns and the aperture has a thickness of the order of at least two wavelengths of the illuminating radar;

the conductive skin surface of the space craft being provided with a detent to accommodate said lossy washer to provide a smooth outer surface for the space craft throughout the region of said lossy washer; and

lossy matter partially filling said lossy washer with the loss tangent of the lossy matter being least at the rim and greatest at the inner surface adjacent to the aperture.

6. In combination with a space craft having a conductive skin surface arranged to electronically simulate an infinite conducting cone with respect to frequencies of illuminating radar which may reasonably be expected to impinge thereon, an access port and door camouflage arrangement, comprising:

a lossy washer surrounding a port and arranged with an outer rim and a central aperture, providing access to the port and having a tapered physical configuration such that the rim has a thickness of the order of a few microns and the aperture has a thickness of the order of at least two wavelengths of the illuminating radar, said physical configuration being such that no portion of the inner or the outer surface of said lossy washer has a radius of curvature less than said two wavelengths;

lossy matter partially filling said washer with the loss tangent of the lossy matter being least at the rim and greatest at the inner surface adjacent to the aperture;

a door positionable to close said port;

a lossy plug secured to said door for filling the aperture of said lossy washer to provide a smooth outer surface throughout the region of the aperture;

and lossy matter partially filling said plug with the loss tangent being greatest adjacent to said door and least at the outer surface thereof.

7. In combination with a space craft having a conductive skin surface arranged to electronically simulate an infinite conducting cone with respect to frequencies of illuminating radar which may reasonably be expected to impinge thereon, an access port and door camouflage arrangement, comprising:

a lossy washer surrounding a port and arranged with an outer rim and a central aperture, providing access to the port and having a tapered physical configuration such that the rim has a thickness of the order of a few microns and the aperture has a thickness of the order of at least two wavelengths of the illuminating radar, said physical configuration being such that no portion of the inner or the outer surface of said lossy washer has a radius of curvature less than said two wavelengths;

lossy matter partially filling said washer with the loss tangent of the lossy matter being least at the rim and greatest at the inner surface adjacent to the aperture;

a door positionable to close said port and being constructed of conductive material similar to that of the space craft skin surface;

a lossy plug arranged to cover said door, and to fill the aperture of said lossy washer to provide a smooth outer surface throughout the region of the aperture; and

the conductive skin surface of the space craft being provided with a detent to accommodate said lossy washer and said lossy plug to provide a smooth outer surface throughout the region of said lossy washer.

No references cited.

CHESTER L. JUSTUS, *Primary Examiner.*

Declassified and Released by the N R C

In Accordance with E. O. 12958

on NOV 26 1997

[redacted]

8 January 1963

MEMORANDUM FOR THE RECORD

SUBJECT : 9-10 January Meeting On Satellite Vulnerability

1. The vulnerability meeting on 9-10 January should result in two fairly well detailed programs. One would be directed specifically at the "C" vehicle. The second would be a broad, long term program of a more fundamental nature, aimed at providing the basic data we will need for succeeding systems and for more sophisticated approaches with the current system.

2. "C" Vehicle Program

This is already well underway. The communications system has been hardened and all reasonable efforts have been made to reduce the possibilities of anomalous recovery. In addition, a pellet attack reporter is being readied and a shield is being designed. Some very basic measurement work has been done on the radar response and a few simple decoys have been designed. What is left to be done?

a. First, we do not have a clear understanding of vehicle vulnerability to nuclear explosions. The damage effects of prompt gamma and low flux x-rays are not known, nor have we measured the kill distance of high x-ray fluxes. These measurements should be made. Some effects, probably those from low flux x-ray may be quite easy to overcome.

b. SSD should undertake an extensive program of cross section reduction and concurrent decoy design. At the same time they should investigate scintillation techniques to confuse radar signatures. (This may be particularly suitable for "J" which will scintillate naturally for part of its lifetime.)

c. We should develop, test and maintain as shelf items one or more hardened models of the "C" mission. Such models would incorporate cross section reduction techniques, decoys, shielding and other countermeasures. Undoubtedly severely reduced payloads would result. However, without such models we may find ourselves out of business during a trying period when we need coverage most.

2-C-54

[redacted]

3. Broad Progress

A great deal of basic work needs doing. The following, surely, is just a partial list.

a. Development of orbit adjust capability and the associated guidance and thrust mechanism.

b. General pellet shield development and weight reduction.

c. Development of decoy materials and designs, drag life studies, thrust and ejection mechanisms, decoy jammers, decoy propulsion, etc.

d. Methods of reducing optical cross sections.

e. Radar cross section study, low cross section shapes, absorbers, signal attenuation and modofication, scintillation techniques, flush mounted antennas.

f. Air and underwater launch systems.

g. X-ray shielding.

h. Study and development of capability to hide among existing space objects.

SIGNED

[redacted]

Development Division
OSA-DD/R

DD/OSA/[redacted]
Distribution:

[redacted]

~~Secret~~

[redacted]

Copy [redacted]

17 April 1963

MEMORANDUM FOR : Deputy for Technology/OSA

SUBJECT : A Covert Reconnaissance Satellite

1. Reconnaissance satellite systems currently under development are designed mainly to obtain increasingly higher resolution photography and, as a result, require increasingly heavier payloads and boosters and added communications. These systems, while certainly in response to consumer needs, are difficult, if not impossible, to conceal. Protection against a determined Soviet defense will certainly involve considerable loss or degradation of product, if, in fact, protection is at all possible for any extended period of time. This is to say nothing of the severe international climate likely to result from an active measure-countermeasure game played in space over Soviet territory.

2. In other words, if we rely solely on these high performance systems, an intense Soviet effort will seriously reduce our coverage and may deprive us of coverage completely. This, then, is the justification for development of a backup covert system which would rely, above all, on concealment. This system will be kept on the shelf until needed. The circumstances surrounding its use indicate the following system characteristics:

a. Concealment of the system and operations will be of paramount importance requiring:

(1) A separate and tight security system.

(2) Covert and at least portable launch and recovery, preferably mobile.

(3) Silent launch, silent orbital operations, and, so far as possible, silent recovery.

(4) Simplified check-out and handling procedures, requiring a minimum of personnel.

Declassified and Released by the N R O

In Accordance with E. O. 12958

on NOV 26 1997

[redacted]

(5) Reduction of radar and optical cross-sections below the detection threshhold, as well as consideration of other detection vulnerabilities such as plasma perturbation.

(6) Covert operable prelaunch command channel.

b. System design for extended storage and establishment of a separate payload and maintenance facility.

3. There is no doubt that product quality from such a system will be seriously affected by the above considerations, particularly the launch restrictions. However, it is equally clear that, given the operating circumstances, useful coverage can be obtained. In the general environment postulated, the following assumptions can legitimately be made:

a. General coverage of the area from earlier systems will be available. This coverage may be one to three years old, but will assist in location of items of interest with relation to other, known points and in the identification of marginally resolved items.

b. An overt, pointing system will be available for high risk usage, for further analysis of critical items discovered.

An analysis is being made by NPIC on the intelligence available from various quality products. That is, what can be determined from "1 foot" resolution, "10 foot" resolution, "100 foot" resolution, etc. It is apparent that no hard and fast rules can be drawn, and that prior information on the area is of great assistance.

Lacking for the moment the NPIC analysis, it appears that a performance roughly equivalent to early CORONA systems (30' compared to present CORONA 10') may be on the margin of providing useful product. Payload limitations and intelligence needs probably require that the system be of the search type, while current experience also indicates that stereo systems are almost mandatory. Multiple image handling techniques presently under development may well indicate redundant coverage at "low" resolution rather than single coverage at higher quality.

4. As no vehicle to ground communications are permissible, any ground command system envisioned must operate without verification of commands received. Thus, it is desirable to have sufficient accuracy in the injection system, and orbital control system, to remove the necessity for ground control. This may require active v/h sensors, orbital period sensors, and self-correcting orbital programmers. The need for devices of this type will be determined by the photographic system and the film usage efficiency requirement. Attitude control on-orbit will be governed by photographic resolution requirements and by auxiliary data recording requirements.

5. The above considerations are intended to provide some rough bounds within which detailed system designs can be considered. It is recommended that this memorandum or some modification of it be used as a basis for feasibility studies to be performed by selected contractors over the next few months. These studies should provide a detailed analysis of alternative systems, their requirements and characteristics. By August or September, we should be in a position to specify the system in considerable detail and prepare cost estimates and a request for proposal.

SIGNED

[redacted] DD/OSA

SIGNED

[redacted] DD/OSA

[redacted] and [redacted] (17 April 1963)

Distribution:

[redacted]

CORONA

Notes by DCI. [redacted]

1 0 SEP 1965

MEMORANDUM FOR: Director of Central Intelligence

SUBJECT: Vulnerability of the CORONA System to Soviet Countermeasures

1. This memorandum is in response to your request for information on the actions that would be taken to enhance the survivability of the CORONA photographic reconnaissance satellite vehicle in the face of Soviet countermeasures.

2. The general responsibility for providing protection systems for the CORONA vehicle lies with [redacted] Space Systems Division [redacted]. There is an [redacted] officer designated with the responsibility of insuring that adequate protection measures are available in the contingency that the Soviets should initiate an active program to interfere with our satellite reconnaissance capability. The Office of Special Projects, DDS&T, is knowledgeable of the status of these vulnerability reduction programs. Also, the DDS&T does at times provide to SSD information concerning the status of the Soviet anti-satellite capabilities. To date, however, these relations have been informal in character. The Office of Special Projects has taken action to obtain an immediate status report on the CORONA vulnerability program and will undertake to keep you informed of any new developments. What follows below is a brief summary of the current status of that study as we understand it.

[redacted]

Copy [redacted]

1-D-18

Declassified and Released by the N R O

In Accordance with E. O. 12958

SECRET

[redacted] ONLY

SUBJECT: Vulnerability of the CORONA System to Soviet Countermeasures

3. There now exists a capability for augmenting the CORONA vehicle with a limited decoy capability on a quick reaction basis. This decoy system will undoubtedly enhance the survivability of CORONA. There has recently been tested a small solid rocket propulsion system which can be strapped on the Agena as required to provide the capability for changing the orbit of the satellite vehicle several times during the course of the mission. This also will increase the probability of CORONA surviving in that it complicates the Soviet's tracking and interception problem. It is currently planned to flight test sometime this fall a chaff dispensing system. If this system proves effective, it too will be placed on the shelf to provide an additional quick reaction vulnerability reduction capability. The DDS&T has no knowledge of the operational plan that will be followed in the face of Soviet anti-satellite actions, nor have we conducted an independent evaluation of the effectiveness of the survivability aids outlined above.

4. At various times in the past the Office of Special Projects has conducted limited studies to identify additional techniques applicable to satellite vulnerability reduction. These studies have covered chaff, decoy, radar cross section reduction, as well as sophisticated electronic jamming systems. There is no doubt that the survivability of low altitude satellites in general can be greatly enhanced by proper choice of equipment and operational techniques. However, it is not clear what performance penalties must be paid in the case of the CORONA system to achieve a satisfactory survivability level should the Soviets elect to initiate an aggressive anti-satellite program.

ALBERT D. WHEELON
Deputy Director
for
Science and Technology

[redacted]

United States Patent [19]

Manning et al.

[11] **4,044,358**

[45] **Aug. 23, 1977**

[54] **SELF ERECTABLE STRUCTURE**

[75] Inventors: **William P. Manning; Louis Maus,** both of Tulsa, Okla.

[73] Assignee: **Rockwell International Corporation,** El Segundo, Calif.

[21] Appl. No.: **670,828**

[22] Filed: **Sept. 25, 1967**

[51] **Int. Cl.**[2] **H01Q 15/00;** H01Q 17/00

[52] **U.S. Cl.** ..... **343/18 A;** 343/18 B; 428/12; 428/101

[58] **Field of Search** ..... 343/18 A, 18 B; 161/49, 161/53, 69, 130, 132; 428/12, 101

[56] **References Cited**

U.S. PATENT DOCUMENTS

2,072,152	3/1937	Blake et al.	161/53 UX
2,742,387	4/1956	Giuliani	343/18 B
2,771,602	11/1956	Kuhnhold	343/18 A
2,828,484	3/1958	Skellett	343/18 A
3,001,196	9/1961	McIlroy et al.	343/18 B
3,152,033	10/1961	Black et al.	161/130 X
3,227,601	1/1966	Crosby	161/69
3,314,846	4/1967	Niwa	161/69

Primary Examiner—Malcolm F. Hubler

[57] **ABSTRACT**

An interference type radar attenuator is described formed of a plurality of thin sheets having selected admittance values. The sheets are spaced apart by thin plastic spacer members having a shape memory so that the sheets can be compressed together by deforming the plastic spacers for very tight packaging and, upon release of the packaging, the sheets return to a spaced relation for effective radar attenuation. A similar structure is useful in space vehicles for thermal shielding and as a meteroid bumper.

14 Claims, 7 Drawing Figures

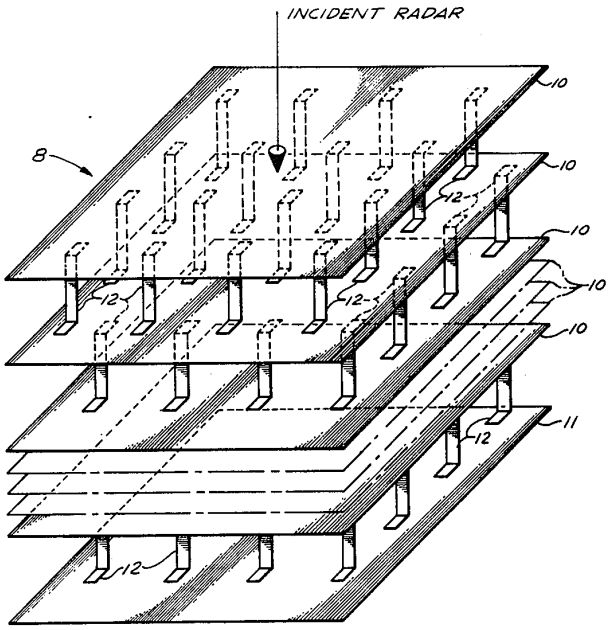

FIG. 2

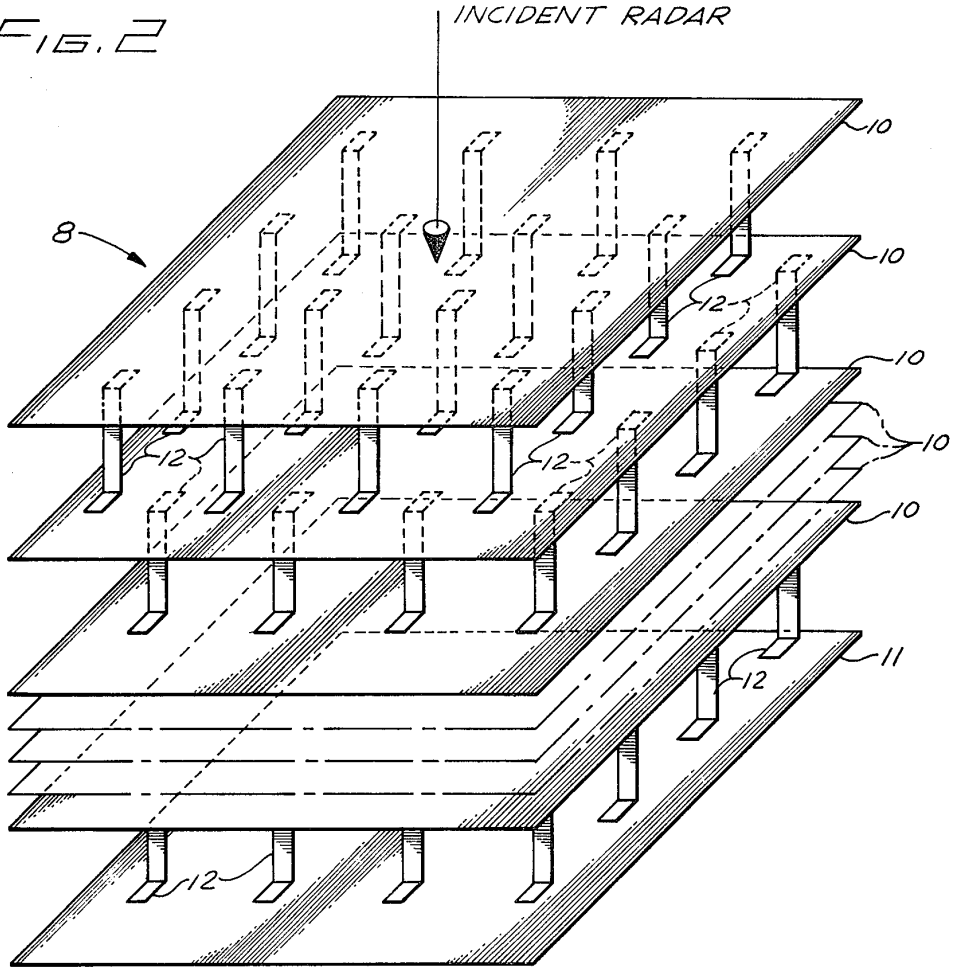

FIG. 1

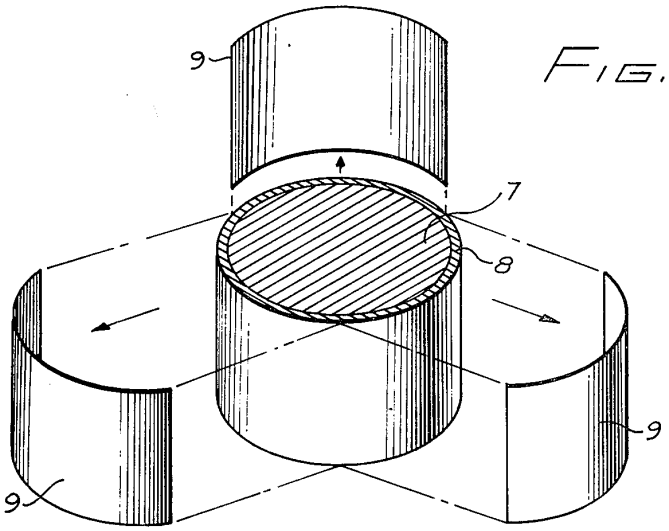

INVENTORS.
WILLIAM P. MANNING
LOUIS MAUS
BY Richard D. Seibel
ATTORNEY

FIG. 3

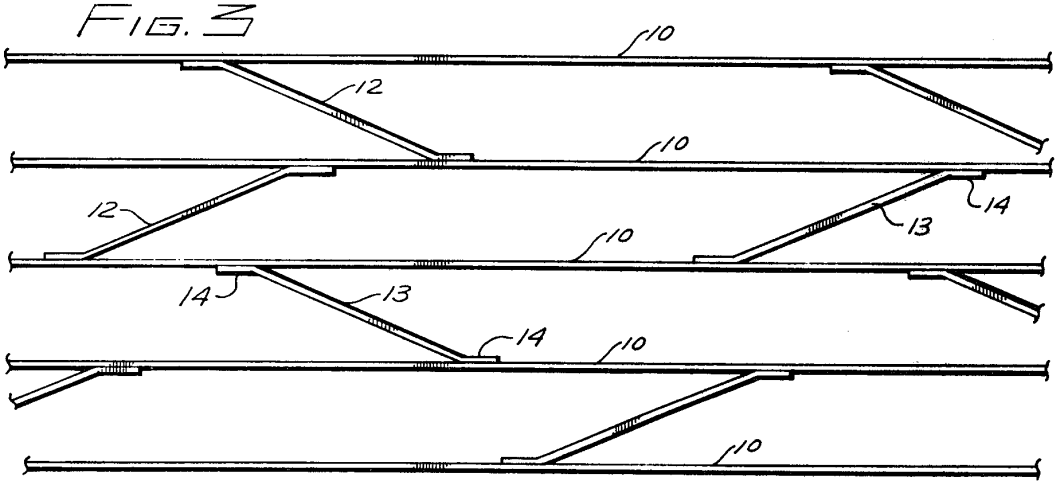

FIG. 4

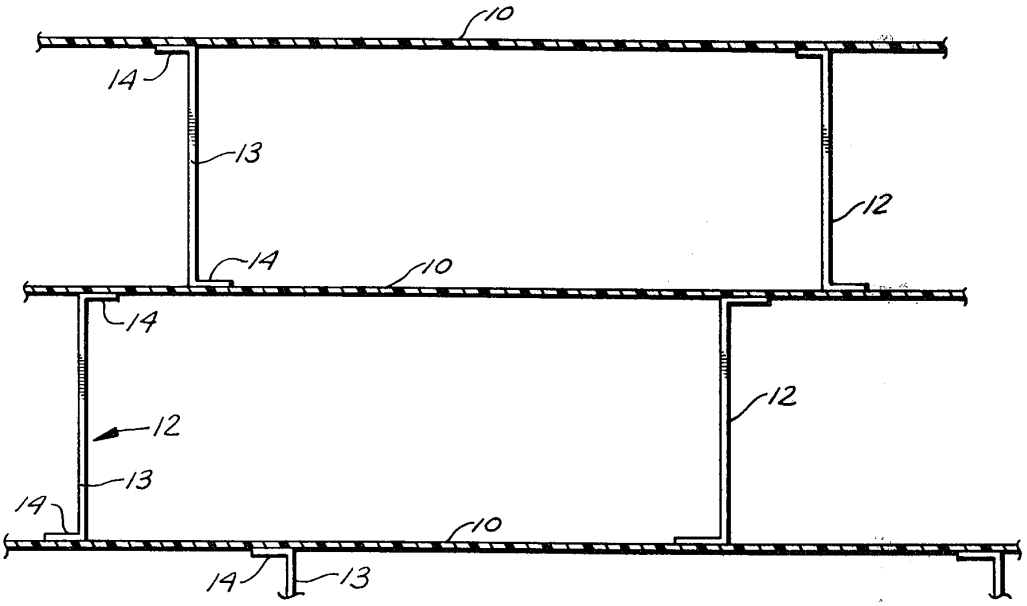

FIG. 7

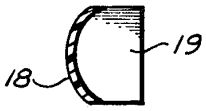

FIG. 5

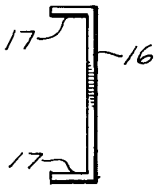

FIG. 6

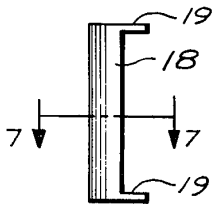

INVENTORS.
WILLIAM P. MANNING
LOUIS MAUS
BY Richard D. Seibel
ATTORNEY

SELF ERECTABLE STRUCTURE

BACKGROUND

In many situations it is desirable to provide a radar attenuating surface on or surrounding a structure or vehicle in order to minimize the ability of an enemy to detect or track the structure or vehicle. In order to provide effective radar attenuation by interference techniques at very low radar frequencies it is usually necessary to employ a relative thick structure at the surface. This thick structure may make the transport of the item difficult because of its bulkiness.

A vehicle in which the transport problem is particularly acute comprises a space vehicle such as a satellite or the like. During launch of a satellite it is desirable to have as small a package as possible for minimizing aerodynamic drag and minimizing the weight of any necessary surrounding shrouds and the like. It is also desirable to satellite structures to employ as light a weight as possible for all components of the vehicle. It is therefore desirable to provide a light weight radar attenuator for a space vehicle that is readily packaged into a small volume for launch and subsequently deployed for providing relatively thick radar attenuator.

BRIEF SUMMARY OF THE INVENTION

Thus, in the practice of this invention according to a preferred embodiment there is provided a self erectable structure comprising a plurality of thin sheets of flexible material, and a plurality of flexible connecting members spacing the sheets apart at selected distances. The connecting members are constructed of a material having shape memory so that they deform when the sheets are compressed or compacted together for packaging and extend to a full sheet spacing when the packaging is released.

Objects and many of the attendant advantages of this invention will be readily appreciated as the same becomes better understood by reference to the following detailed description when considered in conjunction with the accompanying drawings wherein;

FIG. **1** illustrates in perspective a space vehicle and jettisonable shrouds;

FIG. **2** illustrates a self erectable structure constructed according to the principles of this invention for use on the vehicle of FIG. **1**;

FIG. **3** illustrates in section a portion of the structure of FIG. **2** partly compressed for packaging;

FIG. **4** illustrates in section a portion of the structure of FIG. **3** fully extended;

FIG. **5** illustrates an alternative spacing member;

FIG. **6** illustrates another alternative spacing member; and

FIG. **7** comprises a cross section of the spacing member of FIG. **6**.

Throughout the drawings like reference numerals refer to like parts.

Electromagnetic waves such as radar may be absorbed by a so-called quarter wave or Salisbury screen which comprises a thin layer of material having an impedance of about 377 ohms per square spaced exactly one quarter wavelength from a reflective surface. Such an absorber is described in U.S. Pat. No. 2,599,944. Since an absorber of this type prevents radar reflection by a mechanism of destructive interference at one quarter wavelength from a reflective surface it is found to be highly sensitive to frequency and will attenuate radar

only within a narrow frequency band. It is found, however, that such an interference absorber also attenuates radiation at odd multiples of one quarter wavelength.

Further, it is found that a series of resistive layers individually spaced from a reflective surface at different distances each attenuate radiation at differnet wavelengths and a broad band radar attenuator can be achieved. The impedance of the successive layers spaced apart from the reflective surface and the spacing therebetween is governed by interactions between the successive sheets and these sheets may not each be provided with an impedance 377 ohms per square. In general it is found that the first sheet upon which radar is expected to impinge should have an effective impedance, as seen by an incoming radar wave, of about 377 ohms per square in order to have minimal reflection of radar therefrom. Successive sheets between the outermost layer and the reflective layer have successively lower impedances down to the substantially zero impedance of the reflective layer. The selection of impedances for the various sheets and the spacing therebetween are readily determined for particular frequency ranges of attenuation by one skilled in the art. It is preferred that the sheets have d.c. resistivities in the range of from about 40 to 2000 ohms per square to provide effective attenuation in a multilayer, broad band radar attenuator. In general, the total thickness of attenuator spaced from the reflective layer is determined by the longest wavelength of radar to be attenuated; this distance approximating one quarter of the longest wavelength of the radiation. The distance between successive sheets is likewise determined by reference to the shortest wavelengths it is desired to attenuate; this distance being approximated by one quarter of the shortest wavelength.

Previously interference type absorbers have been formed of carbon loaded fabric sheets spaced apart by non-metallic honeycomb materials or have comprised similar relative heavy and rigid structures. These absorbers are unduly heavy and bulky for application in most space situations.

A significant problem associated with interference type absorbers is the substantial thickness that must be employed in a design for attenuation of lower frequency radar. This difficulty is circumvented herein by making the radar attenuator material erectable in space and, thereby, providing the necessary dimensions without violating limitations on storage space aboard the space vehicle. Also, because the radar attenuator material may be damage by boost heating, thermal protection during launching boost is necessary. To keep the weight to a minimum, it is mandatory that the radar attenuator material be deployed from a compact volume that can be shielded with a relatively small amount of thermal protection material. With these considerations in mind, there is provided a high-performance, lightweight radar attenuator that is self-erecting from a compacted configuration and which can meet the variety of constraints imposed by space environments and spacecraft systems.

FIG. **1** illustrates in perspective a spacecraft **7** having its cylindrical sides covered with a radar attenuator material **8** as provided in practice of this invention according to a preferred embodiment. The spacecraft is arbitrarily shown as a regular cylinder, however, it will be apparent that other regular and irregular shapes may be involved. The radar attenuator material **8** is covered during launch of the space vehicle with a plurality of shrouds **9** which are jettisoned when the spacecraft has

reached a position where aerodynamic forces will not damage the radar attenuator. Coventional releasing mechanisms (not shown) such as quick disconnects, latches or explosive bolts are employed for jettisoning the shrouds at high altitudes.

FIG. 2 illustrates in perspective a portion of the self erectable, light weight interference absorber **8** from FIG. **1**, constructed according to the principles of this invention. As illustrated therein there are provided a plurality of attenuator sheets **10** mutually spaced apart from each other and spaced apart from a reflective sheet **11.** (A portion of the attenuator sheets **10** are shown closely spaced and in phantom in FIG. **2** only for purposes of illustration and it will be understood that the sheets are usually uniformly spaced apart). The attenuator sheets **10** preferably comprise thin plastic membranes, each having a resistive or poorly conductive layer printed, vacuum metallized, or otherwise suitably secured thereon in order to provide a selected impedance for radar attenuation. The innermost sheet **11,** that is, the sheet furthest from the surface upon which incident radar is expected to impinge is preferably formed of a vacuum metallized plastic sheet having sufficient conductive material deposited thereon to provide good electrical conductivity. If desired in certain instances the innermost layer **11** may comprise a metallic surface of the space vehicle or the like. In general, however, the external surface of the vehicle may have a geometry unsatisfactory for providing optimum radar attenuation and it is therefore desirable to provide an additional conductive surface **11** for the radar attenuator which may have a different geometry then the vehicle being covered. It will be apparent that, although the embodiment of FIG. **2** is illustrated as flat that it represents a portion of the curved structure of FIG. **1** and that the several sheets can still be considered substantially parallel.

The several attenuator sheets **10** and the conductive layer **11** are each spaced apart by a plurality of non-metallic connecting members **12.** It is significant that the connecting members are non-conductive since the presence of conductive material would give large radar reflections. Each of the connecting members **12** comprises a central spacing portion **13** and a pair of end tabs **14** connected at opposite ends of the spacing portion **13** in a general Z shape. In the described and illustrated embodiment the spacing portion **13** of the connecting members are all the same length. It will be apparent that the spacing portions between different sheets may be of different lengths so that the sheets are spaced apart differing distances. It is preferred that the end tabs **14** disposed at right angles to the spacing portion **13** when the connecting members are unstressed. Each of the end tabs **14** on each connecting member **12** is attached to one of a pair of attenuator sheets **10** (or to the reflective layer **11**). The connecting members serve to prevent the sheets from being further apart than the spacing portion since they can act in tension. They also serve to prevent the sheets from being closer together than the spacing portion since they can act in compression. Further, they provide the force required for deployment of the sheets upon release of any constraints thereon.

The connecting members **12** are preferably made of thin plastic having a shape memory so that they can be deformed for compressing the sheets together and spring back to the original position for spacing apart. The property of shape memory is an elastic property and indicates that prolonged deformation does not vitiate the elastic response due to creep or relaxation under the stress of deformation. Thus, as illustrated in FIG. **3,** the connecting members **12** are bent as the sheets **10** are compressed or compacted together thereby permitting the entire assemblage to be compacted and squeezed into a relatively small package. As illustrated in FIG. **3** the sheets are only partly compressed together and the connecting members are only partly bent for purposes of illustration. It will be apparent to one skilled in the art that upon full compression of the assemblage so that the sheets **10** are substantially in contact, that the connecting members **12** are bent substantially flat against the sheets **10.** It will be appreciated that, whereas in FIG. **3** the consecutive sheets are shown to have shifted relative to each other in opposite directions so as to straighten out the Z shaped connecting members **12,** in practice many of the connecting members **12** will buckle in the spacing portion **13** in addition to bending at the intersection of the spacing portion **13** and the end tabs **14** and that the sheets **10** may not displace much laterally from each other in the course of compression in the assemblage. It is found in practice that compressing an assemblage of sheets as described and illustrated involves buckling and bending of the connecting members **12** and usually some wrinkling of the attenuator sheets **10** so that the entire assemblage is not compressed uniformly and to its maximum theoretical limit.

As pointed out hereinabove the sheets and connecting members are compacted into a relatively small packaging volume for launch of a satellite. Upon release of the restraining shrouds **9** (FIG. **1**) holding the sheets in compression during launch the Z shaped connecting members **12** act as a large plurality of springs and straighten out into a right angled Z shape substantially as illustrated in FIG. **4** wherein a few typical sheets **10** are spaced apart at their full extent by the spacing portion **13** of the connecting members **12.**

The connecting members **12** are preferably formed of a non-conductive plastic material that exhibits a property known as shape memory. This is an ability to return to an original shape even after extended periods of deformation. Many plastic materials, although having adequate elasticity, may be unsuitable for such application because of their propensity toward "creeping" when deformed for substantial periods of time. A material particularly well suited to this requirement and having good shape memory comprises orientated sheets of polyethylene terephthalate such as is marketed under the trade name Mylar by E. I. duPont de Nemours Company. The connecting members can readily be formed by bending into the desired shape and heating to about 300° F. Upon cooling the film remains in the new geometry and even when deformed therefrom for a substantial time will naturally and spontaneously return to this geometry when released. It will be apparent to one skilled in the art that polyester films besides Mylar and many of the polyamide films (nylon) or polyvinylchloride are also suitable as materials having a substantial shape memory. If the duration of compression is relatively short other elastic materials, with poorer shape memory can be employed if desired. In a specific embodiment is has been found that Mylar sheets 0.002 inch thick in ½ inch wide strips form excellent connecting members for spacing apart attenuator sheets formed of 0.001 inch thick Mylar.

In the formation of radar attenuators it is preferred that the attenuator sheets be spaced apart at well known intervals so that the attenuation achieved is readily

predictable over the frequency band of interest. In order to maintain the sheets at a well known distance apart throughout their extent a plurality of connecting members **12** are provided between the several attenuator sheets. This assures support for each of the attenuator sheets at frequent intervals and provides accurate spacing of the sheets.

The presence of the dielectric connecting members between the attenuator sheets has a very slight disturbing effect on the interference phenomenon occuring in the radar attenuator. It is therefore desirable that the connecting members in successive layers be staggered from each other so that no continuous disturbance of the electrical characteristics occurs on any direct path clear through the assemblage of attenuator sheets. Thus, as illustrated in FIGS. **2** to **4** the connecting members **12** in each layer are staggered or displaced laterally from the connecting members in the other layer for minimal disturbance of the electrical characteristics of the radar attenuator.

A structure as described for spacing a plurality of light weight sheets apart is useful for providing thermal shielding. In this instance the sheets are preferably metallized with a reflective layer for reflecting radiation and relatively long thermal paths are provided between adjacent sheets for minimizing conduction. A plurality of spaced sheets are also useful as a micrometroid bumper in a space vehicle. A high velocity encounter with a micrometeroid may perforate a unitary structure, however, perforation of a few spaced sheets dissipates appreciable energy and may prevent damage to a primary structure. In either instance it may be desirable to compress and contain the plurality of sheets in a shroud or the like for transport and later deploy the sheets into spaced relation for use. A self erectable structure as provided in practice of this invention is admirably suited to such deployment.

In a specific embodiment a radar attenuator giving good broad band attenuation was constructed according to the principles of this invention. In this embodiment seven layers of metallized Mylar film were employed above a reflective ground plane for a total thickness of radar attenuator of about 24 inches. The first sheet spaced apart from the reflective layer comprised 0.001 inch thick Mylar vacuum metallized with bismuth to give an optical transmissivity of about 7% and a d.c. resistance of about 95 ohms per square. Optical transmissivity is a convenient measure of film thickness and properties dependent thereon such as resistance. Very thin films of metal are semi-transparent and the degree of transparency depends on the thickness. Since resistance also depends on thickness, it is readily correlated with transmissivity and the latter serves as a readily applied process control measure. It should also be noted that the cited resistance is d.c. and there is a change with frequency. Typically resistance at about 109 cycles per second is about twice that at d.c. and the latter is usually measured merely for convenience. This sheet was spaced from the reflective layer about 3.38 inch by means of ½ inch wide Z shaped strips of Mylar 0.002 inch thick having end tabs cemented to both the conductive reflective layer and the attenuator sheet by polyurethane cement. The connecting portion of each of the strips was about 3.38 inch long.

Each of the additional attenuator sheets was also spaced at 3.38 inch from its adjacent attenuator sheets by similar Mylar strips. The next attenuator sheet adjacent the first comprised a 0.001 inch thick Mylar sheet vacuumed metallized with bismuth to give an optical transmissivity of about 17% and a d.c. resistance of about 160 ohms per square. The next two sheets in the composite radar attenuator comprised 0.001 inch thick Mylar sheets vacuum metallized with bismuth to give an optical transmissivity of about 23.8% and a d.c. resistance of about 235 ohms per square.

The final three sheets in the composite radar attenuator comprised 0.001 inch thick Mylar vacuum metallized with bismuth to give an optical transmissivity of about 31.5% and a d.c. resistance of about 420 ohms per square. Measurements of radar echo from such a composite interference attenuator showed good absorption throughout a broad frequency range. Because of the good strength to weight ratio of Mylar, thin sheets and spacers are possible and the described self erectable attenuator weighs less than 0.10 pounds per square foot of area covered. A packing density of better that 3% is obtained, that is, the volume of the attenuator when compacted and stowed for launch is less than 3% of the volume occupied by the attenuator when fully deployed. Because of the excellent shape memory of Mylar for the connecting members the attenuator is readily packaged and stored in a compressed or compacted condition for substantial periods of time without degrading the capability to deploy the attenuator to its full extent.

It will be apparent that other shapes of connecting members of non-metallic materials can be employed. Thus, for example, as illustrated in FIG. **5** there is provided a connecting member having a generally U shape wherein the spacing portion **16** forms the bight of the U and the end tabs **17** form the legs of the U. A connecting member as illustrated in FIG. **5** is employed in exactly the same manner as the Z shape connecting members **12** in the embodiment of FIGS. **2** to **4**.

In order to obtain a somewhat higher force for deploying and maintaining spacing in a radar attenuator, connecting members as illustrated in FIGS. **6** and **7** can be employed between the attenuator sheets of the interference type radar attenuator. As illustrated therein the connecting members comprise cradle or boat like members having a curved spacing portion **18** and flat end tabs **19**. Because of the somewhat greater stiffness per unit thickness of the curved spacing portion **18** the connecting members can be somewhat thinner for a given strength, and buckling in the spacing portion **18** is virtually assured upon compression of the composite radar absorber rather than bending at the connection between the spacing portion **18** and the end tabs **19**. Many other variations of connecting member can be readily provided by one skilled in the art, for example, the connecting members may be in the form of tubes with ends connected to the sheets, or the the connecting members may be divided in two classes, one acting in compression and the other in tension.

Obviously, many other modifications and variations of the present invention are possible in light of the above teachings. It is therefore to be understood that within the scope of the appended claims the invention may be practiced otherwise than as specifically described.

What is claimed is:

1. A self-erectable structure comprising:

a plurality of sheets of thin flexible material; and

a plurality of thin flexible non-conductive connecting members attached between each of said sheets for spacing each of said sheets apart a selected distance,

said connecting members comprising a material having shape memory so that said members deform when the structure is compressed and spontaneously return to their original shape when released; and wherein;

said sheets and said connecting members comprise a material selected from the class consisting of polyethylene terephthalate and polyvinyl chloride.

2. A self-erectable structure comprising:

a plurality of sheets of thin flexible material, at least a portion of said sheets having a resistivity in the range of from about 40 to 2,000 ohms per square; and

a plurality of thin flexible non-conductive connecting members attached between each of said sheets for spacing each of said sheets apart a selected distance, said connecting members comprising a material having shape memory so that said members deform when the structure is compressed and spontaneously return to their original shape when released.

3. A self erectable structure as defined in claim **2** further comprising:

an electrically conductive thin flexible sheet on one side of the plurality of resistive sheets and spaced therefrom by a plurality of said connecting members for reflecting radar waves; and wherein

said connecting members space the sheets apart a distance of about one quarter wavelength of radiation in the frequency range of radar.

4. A light weight broad band interference type radar attenuator comprising in combination:

an electrically conductive ground plane;

a plurality of semi-conductive attenuator sheets, each substantially parallel to said ground plane; and

non-conductive spacing means between each of said sheets and between one of said sheets and said ground plane for spacing said sheets and said ground plane apart at selected distances, said spacing means being elastically deformable for accomodating compaction of said sheets and ground plane together and for spontaneously extending said sheets from said ground plane.

5. A radar attenuator as defined in claim **4** wherein said spacing means comprises a plurality of separate connecting members between each pair of sheets, each of said connecting members being elastically deformable between a first compacted position and a second extended position.

6. A self erectable structure as defined in claim **5** wherein each of said connecting members comprises:

a central spacing portion sufficiently thin for buckling when the structure is compressed and sufficiently strong for spontaneously straightening when the structure is released; and

a pair of end portions attached to said spacing portion at substantially right angles thereto, each of said end portions being attached to one said sheets.

7. A radar attenuator as defined in claim **6** wherein connecting members on opposite sides of said sheets are displaced laterally on said sheets from each other for minimizing discontinuities in electrical properties.

8. A radar attenuator as defined in claim **6** wherein:

said ground plane comprises a metal coated sheet of plastic; and

each of said attenuator sheets comprises a metal coated sheet of plastic having a resistance in the range of from 40 to 2000 ohms per square.

9. A radar attenuator as defined in claim **6** wherein said plurality of attenuator sheets comprises:

a first conductor coated plastic sheet adjacent said ground plane having a resistance of about 95 ohms per square;

a second conductor coated plastic sheet having a resistance of about 160 ohms per square;

third and fourth conductor coated plastic sheets each having a resistance of about 235 ohms per square; and

fifth, sixth and seventh conductor coated plastic sheets having a resistance of about 420 ohms per square.

10. A radar attenuator as defined in claim **9** wherein said sheets are coated with a thin layer of bismuth;

said ground plane comprises a metal coated sheet of plastic; and

said plastic sheets and said connecting members comprise a material selected from the class consisting of polyethylene terephthlate and polyvinyl chloride.

11. A radar attenuator as defined in claim **9** wherein said attenuator sheets and said conductive ground plane are each spaced apart substantially equal distances to give a composite thickness to the attenuator of about 2 feet for attenuating radiation at lower radar frequencies.

12. An interference type attenuator comprising:

a plurality of attenuator sheets adapted to assume a mutually spaced apart relation to provide radiation attenuation;

means interconnecting said sheets for urging them to said mutually spaced apart relation; and

means for maintaining the sheets in closely compacted relation.

13. An attenuator as defined in claim **12** wherein said means for maintaining the sheets in compacted relation comprises a jettisonable aerodynamic shroud overlying the attenuator sheets.

14. An attenuator as defined in claim **12** wherein the means interconnecting the sheets comprises a plurality of elastic members which are extended when the sheets are in mutually spaced apart relation and are compacted therebetween when the sheets are in closely compacted relation.

* * * * *

United States Patent [19]

Lehman et al.

[11] **Patent Number: 4,947,174**

[45] **Date of Patent: Aug. 7, 1990**

[54] **VEHICLE SHIELD**

[75] Inventors: **Theodore H. Lehman,** Las Cruces, N. Mex.; **William P. Manning,** Tulsa, Okla.

[73] Assignee: **Rockwell International Corporation,** El Segundo, Calif.

[21] Appl. No.: **802,310**

[22] Filed: **Feb. 24, 1969**

[51] **Int. Cl.**[5] **H01Q 17/00;** B64G 1/22; B64G 1/54

[52] **U.S. Cl.** ..... **342/3;** 244/158 R; 244/121

[58] **Field of Search** ..... 343/18 A, 18 B; 342/1–4; 244/158 R

[56] **References Cited**

U.S. PATENT DOCUMENTS

2,801,411	7/1957	Weinstock	343/18 A
3,152,328	10/1964	McMillan	343/18 A
3,233,238	2/1966	Barker	343/18 A

Primary Examiner—Gilberto Barrón, Jr.
Attorney, Agent, or Firm—Charles T. Silberberg

[57] **ABSTRACT**

A radar attenuator shield for a space vehicle is described having an open shell of radar attenuating material presenting a smooth external surface on one side and open on the opposite side in the general shape of a bathtub. The space vehicle is ensconced within the open side for minimizing radar echo. In a preferred embodiment the external surface of the radar attenuator shield is in the form of a semi-cylinder with one-fourth of a sphere at each end thereof.

1 Claim, 1 Drawing Sheet

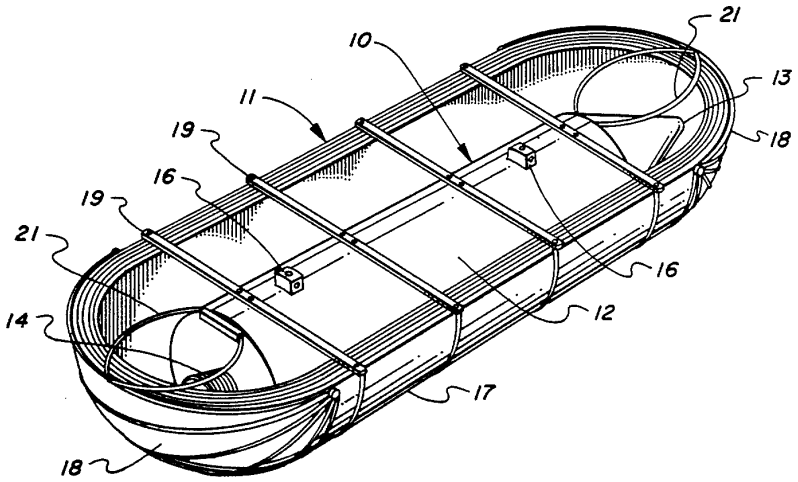

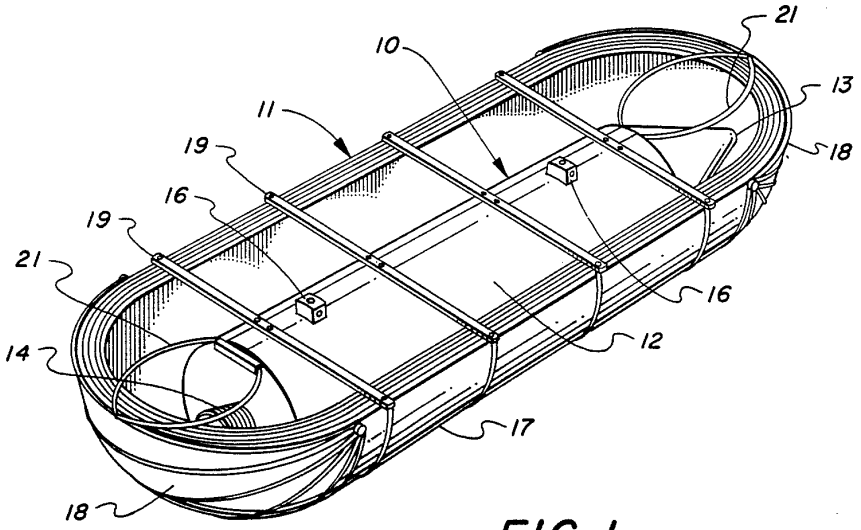

FIG. 1

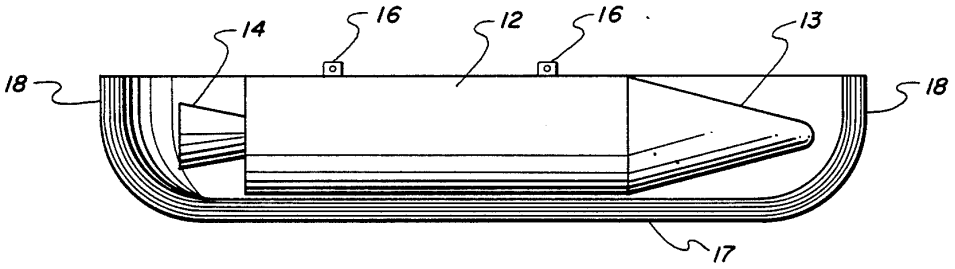

FIG. 2

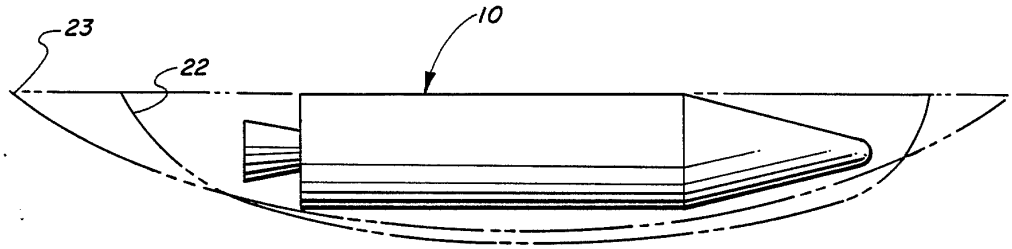

FIG. 3

VEHICLE SHIELD

BACKGROUND

In many situations it is desirable to provide a radar attenuating surface on or surrounding a structure or vehicle in order to minimixe the ability of an enemy to detect or track the vehicle. In order to provide effective radar attenuation by interference techiniques at very low radar frequencies it is usually necessary to employ a relatively thick structure at the surface. This thick structure may make the transport of the vehicle difficult because of its bulkiness.

A vehicle in which the transport problem is particularly acute comprises a space vechicle such as a satellite or the like. In such a vehicle it may be desirable to reduce the radar echo to reduce the possibility of detection and to make precise tracking of the vehicle more difficult. Since radar echos from a vehicle may provide significant information concerning the mass and geometry of the vehicle it may also be desirable to change the radar echo characteristics to conceal the nature and purpose of a space vehicle.

BRIEF SUMMARY OF THE INVENTION

Thus in the practice of this invention according to a preferred embodiment there is provided a radar attenuator shield for an attitude stabilized space vehicle comprising an open shell of radar attenuating material having a smooth external surface on a side facing toward a potential radar threat and open on the opposite side. The space vehicle is arranged within the open side of the shell for camouflage from potential radar threats.

DRAWINGS

Objects and many of the attendent advantages of this invention will be readily appreciated as the same becomes better understood by reference to the following description when considered in conjunction with the accompanying drawings wherein:

FIG. **1** illustrates in perspective a space vehicle within a bathtub shaped shield of radar attenuating material;

FIG. **2** illustrates a transverse section of a combination as illustrated in FIG. **1**; and

FIG. **3** shows alternative shapes for the radar attenuator shield.

FIG. **1** illustrates in perspective a spacecraft or satellite **10** ensconced in a shield **11** of radar attenuating material. As illustrated in this embodiment the vehicle comprises a cylindrical body **12** with a conical forward portion **13** and a rocket engine **14** at the aft end. Such a vehicle **10** will obviously have many subsystems on board which are of substantially no concern in the practice of this invention. One conventional subsystem of interest is employed for stabilizing the space vehicle in a uniform orientation relative to the surface of the earth. Such orientation is readily provided by conventional control systems employing horizon sensors (not shown) or the like to measure orientation and small rocket engines **16** on the sides of the vehicle for obtaining roll, pitch and yaw control in a conventional manner. This provides an attitude stabilized vehicle which can readily maintain a constant orientation relative to the earth's surface.

By maintaining a constant attitude a radar echo from the space vehicle is relatively fixed and varies mainly with location of the searching radar relative to the vehicle. That is, whether the vehicle is directly overhead or presents a forward, sideward, or aft aspect to the searching radar. In many space vehicles the external geometry includes apertures, antennas, rocket engines, and other miscellaneous protrusions or openings which may provide substantial radar echos and thereby enhance the ability of an enemy to detect or track the space vehicle.

Radar reflection from a vehicle is not merely determined by the size of the vehicle but more particularly by its geometry. In a vehicle that is large relative to wavelength of the radar, the surface acts in the manner of a specular reflector, bouncing radar waves off according to the usual laws of reflection. For this reason, a large flat plate, for example, has a very high radar echo when exactly normal to the radar beam, but the echo falls off very rapidly for small angles off normal. Thus a large, smooth vehicle may have a small radar echo except at specific viewing angles.

If, however, the dimensions of an object are of the same order as the wavelength of the radar, diffraction, surface wave phenomena and the like, become of significance and the object acts more like an isotropic radiator of radar. Such an object may reflect the same total radar energy, but spreads the echo over a much larger angle so that the probability of detection is increased. This effect produces high reflections from a vehicle with projections, depressions, or other small structural members. Further, the space vehicle itself may have characteristic dimensions of the same order as the wavelength of low frequency radar and give high reflections over wide angles. Thus, surprisingly, increasing the apparent size of a vehicle may reduce radar echo at some viewing angles.

In order to minimize the radar echo from surface irregularities in a spacecraft a surrounding shield of radar attenuator material **11** may be provided, having a total thickness of two feet or more. By providing a smooth shield or shell of radar attenuator material it is assured that the apparent external geometry of the space vehicle is smooth so that no radar "hot spots" are found due to structural members, antenna, camera apertures, rocket engines, or the like. By employing a radar attenuator material the overall radar echo from the vehicle is also substantially reduced. Thus the radar camouflage not only reduces ability to detect and track the vehicle but also obscures the radar signature of the vehicle to conceal its characteristics even if it is detected.

Electromagnetic waves such as radar may be absorbed or attenuated by socalled quarter wave or Salisbury screen which comprises a thin layer of material having an impedance of about 377 ohms per square, which is the characteristic impedance of free space, spaced exactly one-quarter wavelength from a reflective surface. Such an absorber is described in U.S. Pat. No. 2,599,944. Since an absorber of this type prevents radar reflection by a mechanism of destructive interference at one-quarter wavelength from a reflective surface it is found to be highly sensitive to frequency and will attenuate radar only within a narrow frequency band. It is found, however, that such an interference absorber also attenuates radiation at odd multiples of one-quarter wavelengths.

Further, it is found that a plurality of resistive layers or sheets individually spaced from a reflective surface at different distances each attenuate radiation at different

wavelengths and a broad band radar attenuator can be achieved. The impedance of these excessive layers spaced apart from the reflective surface and the spacing therebetween is governed by interactions between the successive sheets and these sheets may not each be provided with an impedance of 377 ohms per square. In general it is found that the first sheet upon which radar is expected to impinge should have an effective impedance as seen by an incoming radar wave of about 377 ohms per square in order to have minimal reflection therefrom. Successive sheets between the outermost layer and the reflective layer have successively lower effective impedance down to the substantially zero impedance of the reflective layer. The effective impedance of each layer is determined not only by the impedance of that layer but also the impedances of the various underlying layers. The selection of impedances for the various sheets and the spacing therebetween are readily determined for particular frequency ranges of attenuation by one skilled in the art.

It is preferred that the sheets have d.c. resistivities in the range of from about 40 to 2,000 ohms per square to provide effective attenuation in a multilayer broad band radar attenuator. If desired, the layers may have capacitance and inductance at radar frequencies as well as d.c. resistivity for providing greater design flexibility in the radar attenuator. In general, the total thickness of attenuator spaced from the reflective layer is determined by the longest wavelength of radar to be attenuated; this distance approximating one-quarter of the longest wavelength of the radiation. The distance between successive sheets is likewise determined by reference to the shortest wavelength it is desired to attenuate; this distance being approximated by one-quarter of the shortest wavelength.

Previously, interference type attenuators have been formed of carbon loaded fabric sheets spaced apart by non-metallic honeycomb materials or have comprised similar relatively heavy and rigid structures. These absorbers are unduly heavy and bulky for application in most space situations.

Radar attenuating materials suitable for use in this invention and capable of attenuating radar beams over a substantial range of frequencies are described and claimed in copending U.S. patent application Ser. No. 670,828 now U.S. Pat. No. 4,044,358 entitled, "Self Erectable Structure", by William P. Manning and Louis Maus, and assigned to North American Rockwell Corporation, Assignee of this invention. Broadly, this radar attenuator comprises a plurality of sheets of light weight metallized plastic appropriately spaced apart and having particular electrical characteristics for absorbing radar energy by an interference phenomenom. The inner-most sheet in such a radar attenuator comprises a metal foil, for example, which is opaque and reflective to radar and therefore obscures any structure behind the radar attenuating material. As is well-known and pointed out in the aforementioned copending patent application, the echo of a radar beam from the interference type radar attenuator is substantially less than the radar echo from a metal surface of the same geometry.

In order to provide a radar attenuating shield for a space vehicle it is desirable that the structure be light in weight and have a geometry suitable for deployment from a stowed configuration to a deployed configuration. This permits launch of the space vehicle with the radar attenuating shield contained within suitable aerodynamic shrouds and permits deployment of the radar attenuating shield after the space vehicle reaches space and aerodynamic drag is no longer a problem. Suitable techniques for deploying a radar attenuating material from a stowed position are described and illustrated in the aforementioned copending U.S. patent application and also in copending U.S. Pat. No. 4,314,682 entitled "Deployable Shield" by Burton Barnett, Martin R. Kinsler, and Lyle A. Nelson, filed on the same date as this application and assigned to North American Rockwell Corporation, the Assignee of this application. The deployment techniques per se are not a portion of this invention and are set forth in detail in the aforementioned copending applications which are hereby incorporated by reference with full force and effect as if set forth in full herein.

In a preferred embodiment the shield **11** of radar attenuating material is in the shape of an open shell or bathtub having a cylindrical central portion **17** and end portions **18** each in the form of one quarter of a sphere. The cylindrical portion **17** and spherical portions **18** each have an inner radius approximately the same as the diameter of the space vehicle **10**. Thus the space vehicle fits substantially completely within the open side of the radar attenuating shell **11** and does not extend a substantial distance thereabove except as may be required to provide clearance for exhaust from the attitude control rockets **16**. By ensconsing the space vehicle substantially completely within the radar attenuating shell the radar camouflage is maintained over substantially all aspects as might be viewed by an earthbound radar even if the satellite is on the horizon as viewed by the earthbound radar. By employing a radar attenuating shield larger than the space vehicle and extending the shield up to substantially the highest point on the vehicle for shielding the vehicle from ground based radar, the entire upper side of the space vehicle is left free for various subsystems such as the attitude control rockets **16**, star trackers (not shown), solar cells (not shown), or communication antennas (not shown) for communicating to the earth by way of a synchronous satellite stationed high above the earth's surface. With such an arrangement radar camouflage is obtained without seriously handicapping the functions of the space vehicle. Further, by employing a radar attenuating shield larger than the vehicle, the resonant reflection of low frequency radar is also reduced.

In order to secure the shield **11** to the space vehicle **10** cross members **19** are secured to the vehicle structure on the top side thereof as arranged in orbit, and support the shield **11** at the ends of the cross members **19**. In a similar manner loop type supports **21** may be employed at the ends of the space vehicle for supporting the spherical portions **18** of the radar attenuating shield. The cross members **19** and loop type supports **21** may also be employed in deployment of the radar attenuating shield as described and illustrated in the aforementioned copending application entitled, "Deployable Shield".

FIG. **3** illustrates schematically two alternative embodiments useful for providing an open shell of radar attenuating material having a smooth external surface on a side facing toward a potential radar threat. In the preferred embodiment of FIGS. **1** and **2** the radar attenuating shield has a semi-cylindrical center portion and quarter spherical end caps forming the bathtub-like open shell. The preferred shape of a semi-cylinder with spherical end caps is advantageous not only in providing a minimal radar cross section in most viewing an-

gles, but also is readily amenable to automatic deployment in orbit.

In FIG. 3 two other potential external shapes for the radar attenuator material are illustrated schematically. Thus, for example, the space vehicle **10** may be shielded by a radar attenuating material having the shape of an ellipsoid **22**; similarly, the radar attenuating shield may have the external shape of an ogive **23**. It will be apparent to one skilled in the art that other figures of revolution are readily employed for providing an open sided shell of radar attenuating material presenting a smooth external countenance to a ground based radar.

What is claimed is:

1. A radar attenuator shield for an attitude stabilized space vehicle comprising:

a shell having a smooth completely convex surface for containing said vehicle,

said shell having an opening and having a shape such that the mid-portion is one half of a cylindrical tubular form and each of the ends is one fourth of a spherical form,

said shell being made of a material comprising of a plurality of spaced apart attenuator sheets and reflective sheets,

said cylindrical tubular form having an interior radius equal to at least the overall diameter of said vehicle and a length such that said vehicle is contained within said shield, and

struts disposed across said opening to secure said vehicle within the shell.

* * * * *

US006107952A

United States Patent [19]

Barker et al.

[11] **Patent Number: 6,107,952**

[45] **Date of Patent: Aug. 22, 2000**

[54] **CROSSED SKIRT ANTIRADAR SCREEN STRUCTURE FOR SPACE VEHICLES**

[75] Inventors: **William C. Barker**, Pacific Palisades; **Donald M. Slager**, Long Beach, both of Calif.

[73] Assignee: **TRW Inc.**, Redondo Beach, Calif.

[21] Appl. No.: **05/103,909**

[22] Filed: **Jan. 4, 1971**

[51] **Int. Cl.**[7] **H01Q 15/00**

[52] **U.S. Cl.** **342/13**; 342/10

[58] **Field of Search** ..... 244/155, 15 C, 244/121; 343/18 R, 18 B, 18 E; 350/288, 292, 299, 303; 342/8, 10, 11, 1–4, 13

[56] **References Cited**

U.S. PATENT DOCUMENTS

2,953,377 9/1960 Brust ..... 343/18 R

3,122,743 2/1964 Vlasic ..... 343/18 R

Primary Examiner—Michael J. Carone

Attorney, Agent, or Firm—Michael S. Yatsko

[57] **ABSTRACT**

A crossed skirt antiradar screen structure for a space vehicle, such as an orbiting satellite vehicle, having members projecting laterally from the main vehicle body. The screen structure includes multiple primary and auxiliary radar screens having electrically conductive skirts at least partially enclosing the vehicle body and the projecting members in a manner such that the screens cooperate to control the radar cross-section and signature of the entire vehicle. According to an important feature of the invention, the several radar screens are so shaped and arranged that all interior corners defined by the screen skirts have oblique angles which preclude retroreflection of an illuminating radar beam from a ground based radar detection system.

6 Claims, 5 Drawing Sheets

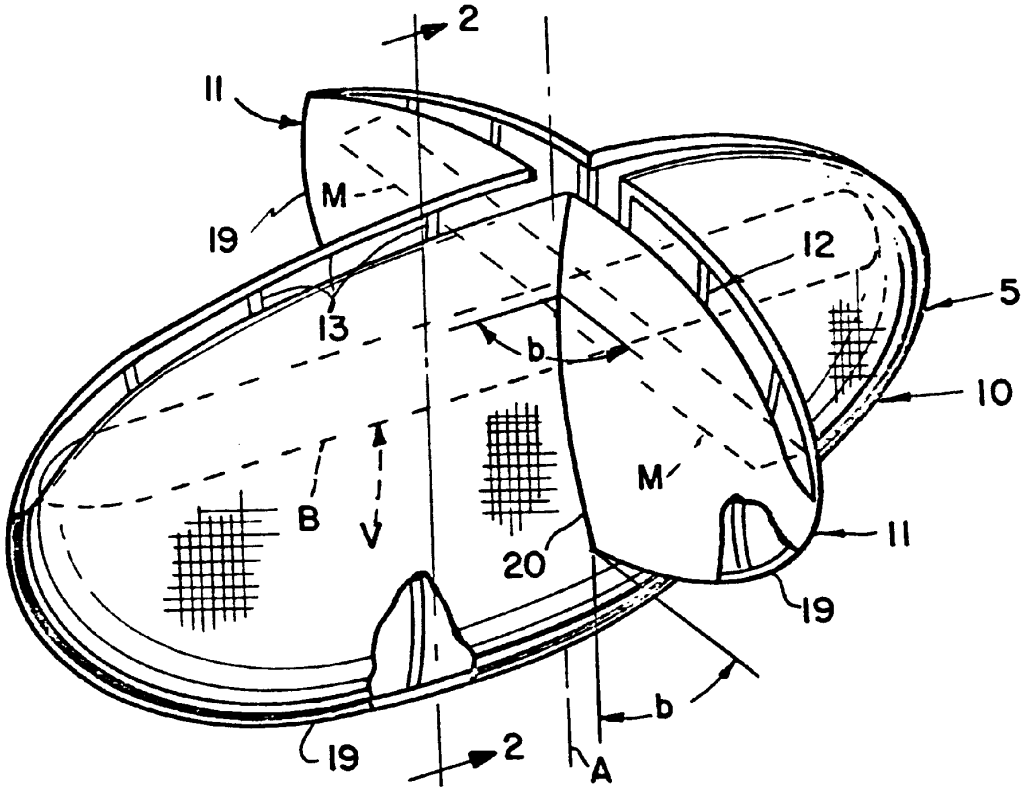

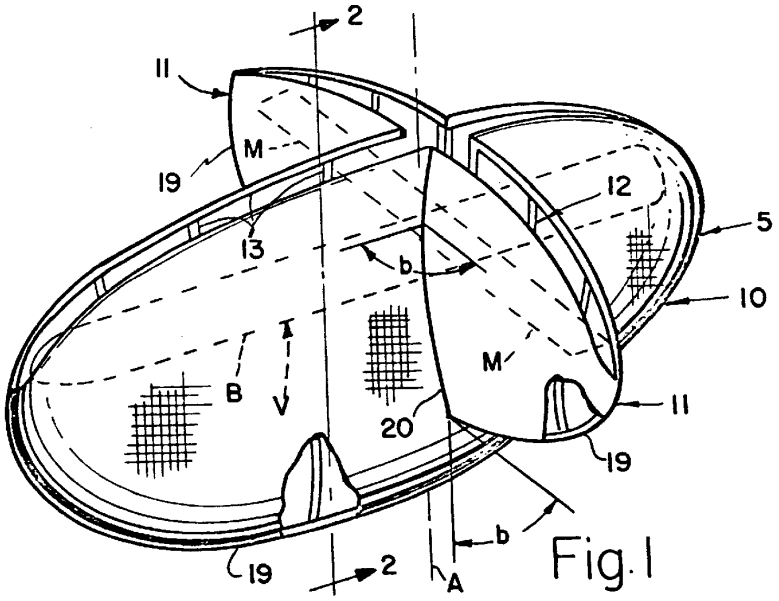
2
11
M
19
13
12
5
b
10
B
V
M
11
20
19
19
2
A
b

Fig. 1

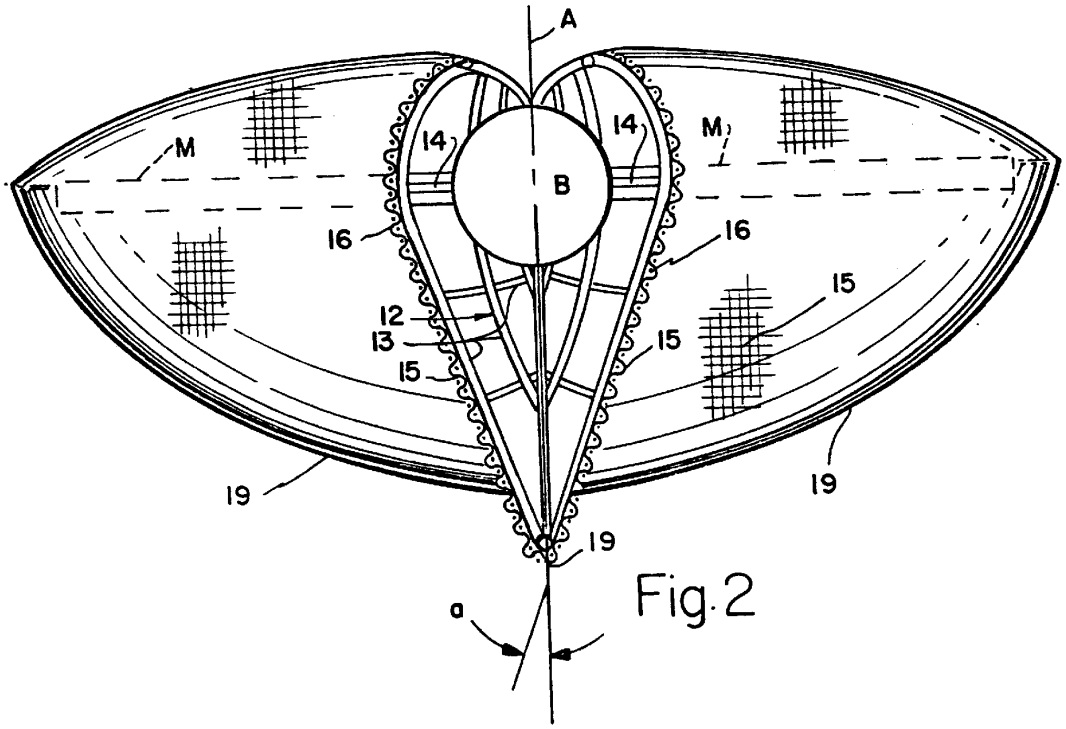
A
M
14
14
M
B
16
16
15
12
13
15
15
19
19
19
a

Fig. 2

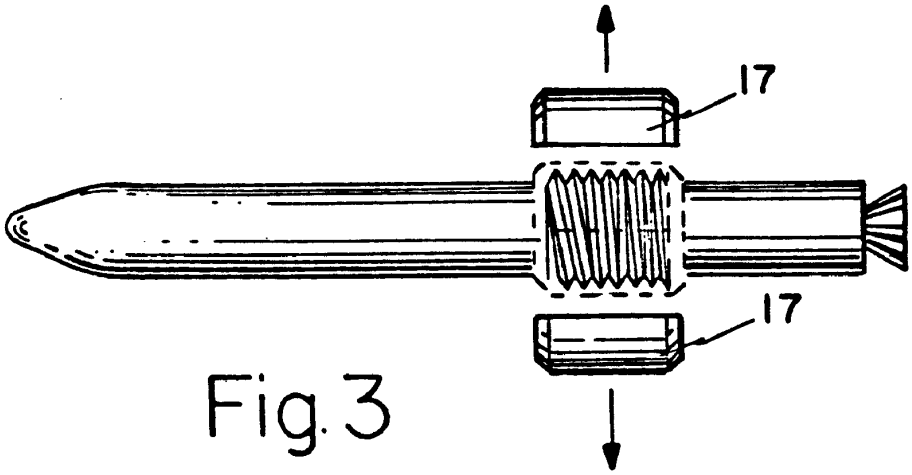

Fig. 3

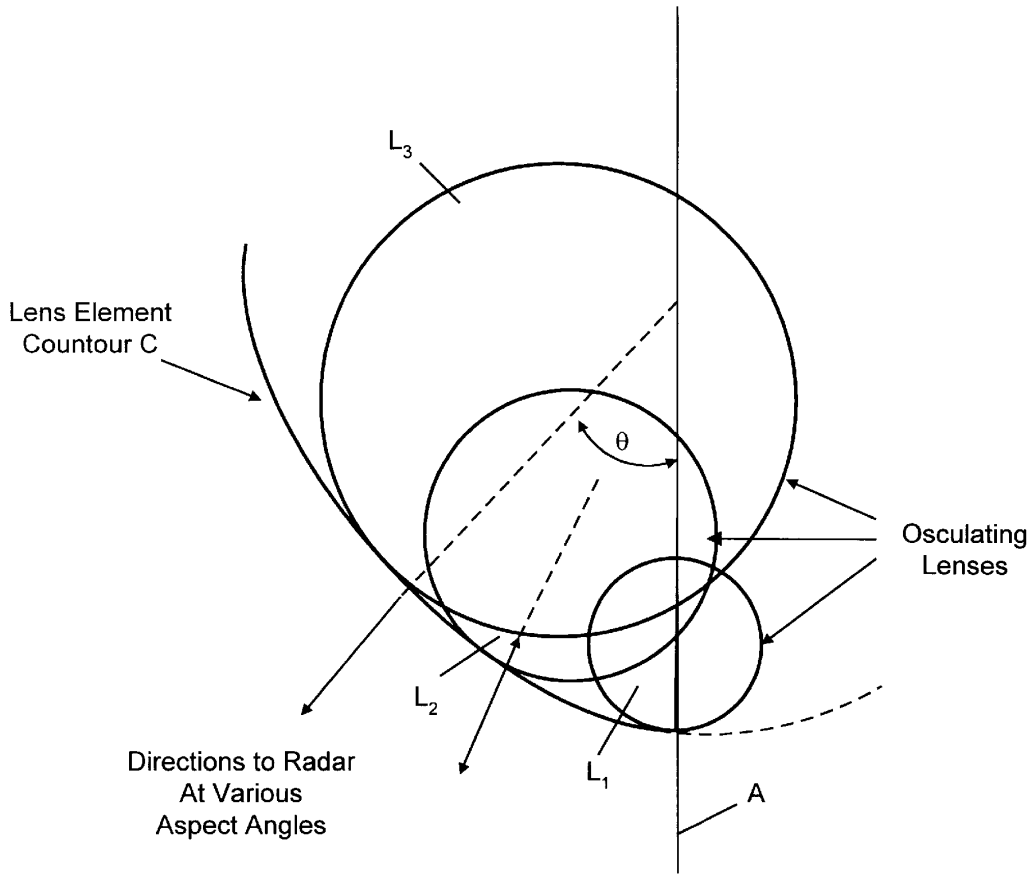
L_3
Lens Element
Countour C
θ
Osculating
Lenses
L_2
Directions to Radar
At Various
Aspect Angles
L_1
A

FIG. 4

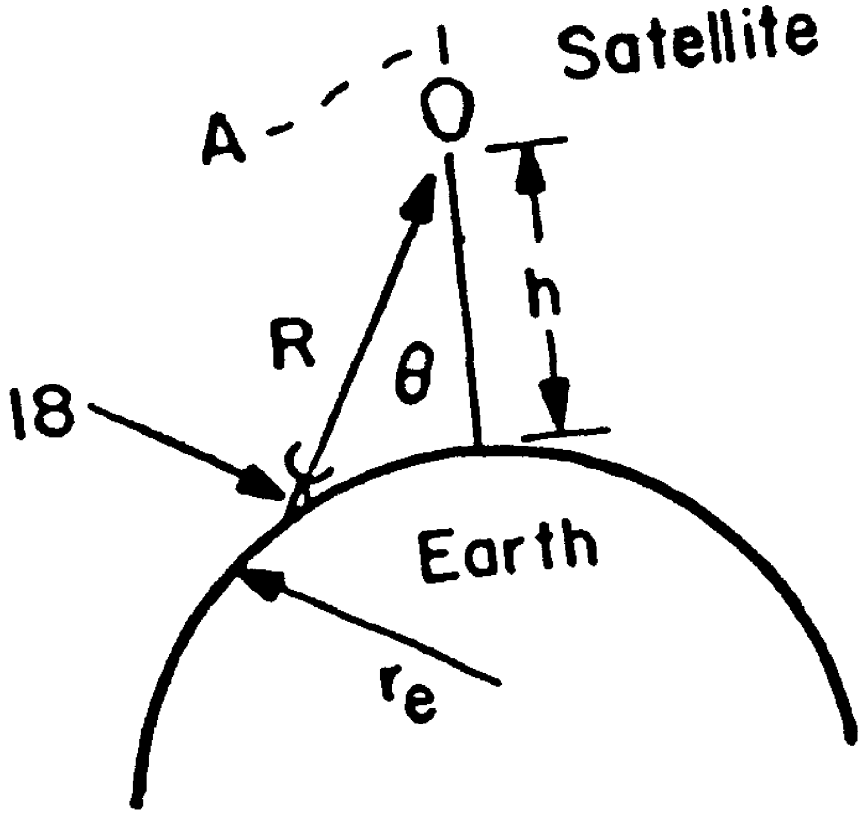

Fig. 5

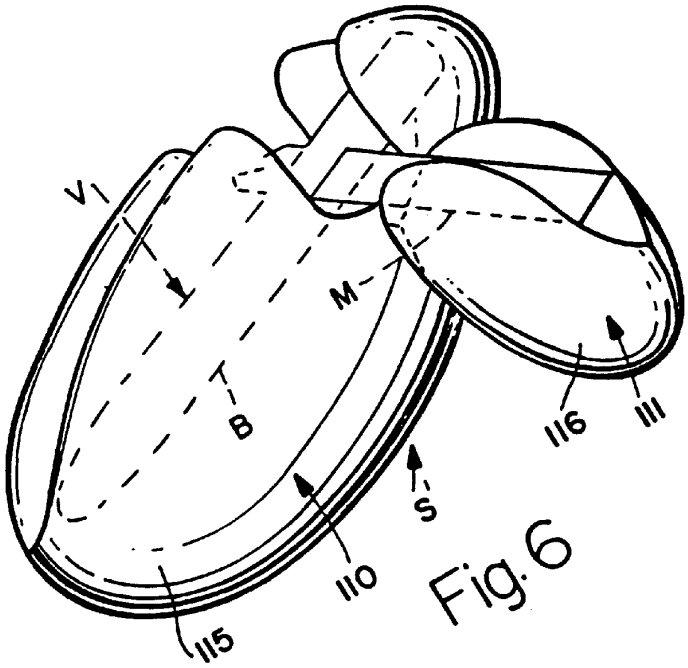

Fig. 6

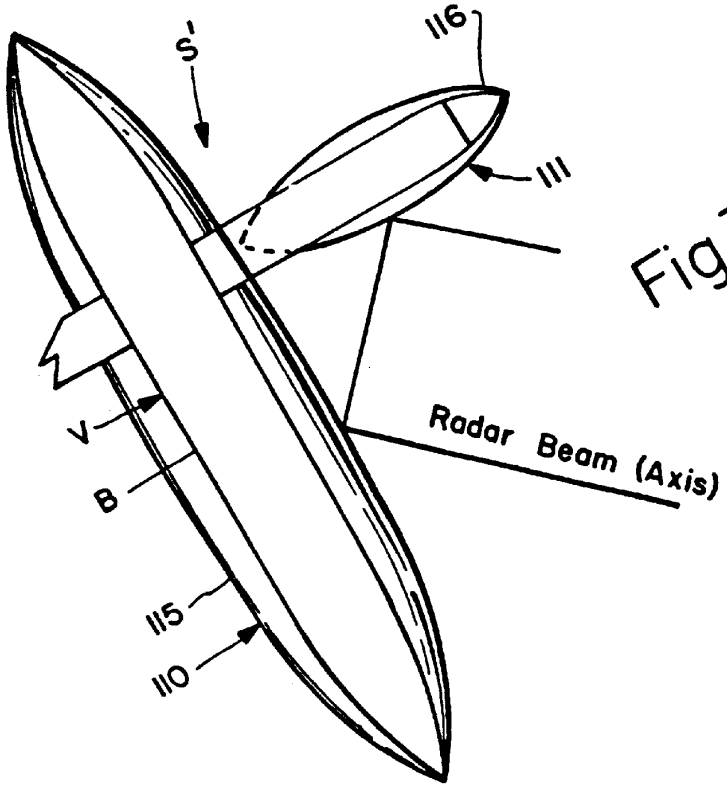

Fig. 7

CROSSED SKIRT ANTIRADAR SCREEN STRUCTURE FOR SPACE VEHICLES

RELATED APPLICATIONS

Reference is made herein to copending applications Ser. No. 04/591,395 now abandoned, filed Oct. 28, 1966 and entitled "Radar Target Simulator (U)"; Ser. No. 04/593,233, filed Nov. 4, 1966 and entitled "Inflatable Anti-Radar Screen (U)"; and Ser. No. 04/721,513, filed Apr. 8, 1968 and entitled "Radar Screen (U)".

BACKGROUND OF THE INVENTION

1. Field of the Invention

This invention relates generally to the art of controlling and suppressing the radar cross-section and signature of a space vehicle, particularly an orbiting satellite vehicle, either for the purpose of preventing its detection by ground based radar detection systems or modifying its radar signature to resemble another space vehicle, such as a decoy. The invention relates more particularly to a space vehicle antiradar screen structure having a novel crossed skirt configuration.

2. Prior Art

At the present state of development of the space vehicle detection art, the most important vehicle observable to be controlled is radar cross-section or signature. This is particularly true of orbiting satellite vehicles whose repeated passes around the earth allow ample time for radar signature analysis and possible ultimate identification of the satellite. A variety of techniques have been devised for controlling and reducing radar cross-section of a space vehicle in a manner such that the vehicle may be effectively decoyed. Such an antiradar device or antiradar screen must either completely deny detection of the space vehicle by search radar or reduce and modify the radar cross-section of the vehicle to permit employment of other aids, such as decoys, to confuse and delay final identification.

A proper signature match between target vehicle and decoys without modification in the target signature would require the external configuration of the decoys to substantially duplicate that of the target vehicle. In most cases, for example, the target vehicle has a characteristic fine structure of large magnitude in its radar signature which varies with frequency, polarization, and radar look angle. Duplication of this signature with a decoy would require a decoy of the same size and shape as the target vehicle, which is often impractical. As a consequence, the most effective method of shielding a target vehicle is that wherein the radar signature of the vehicle is modified to a simplified, reduced magnitude form and the vehicle is accompanied by a swarm of decoys having essentially the same radar signature as the screened target vehicle so as to cause confusion and delay in detection.

A decoy which may be used in conjunction with the signature modifying device of this invention is disclosed in applicant's copending patent application Ser. No. 04/591,395, filed Oct. 28, 1966 and entitled "Radar Target Simulator (U)" now abandoned.

U.S. Patent No. 3,233,238 discloses an antiradar screen structure for reducing radar reflection from a space vehicle. This screen structure has a cone-like shape which completely covers the vehicle and can reduce the radar reflection area to approximately a square centimeter, depending upon the frequency of the illuminating radar, the angle of the cone apex, and the reflections due to first or second order discontinuities of the vehicle's surface structure. To utilize this type of screen on an elongated vehicle body, would require a cone with a major diameter greater than the length of the vehicle which in turn would make the cone quite large in length and width.

Copending applications Ser. Nos. 04/593,233 and 04/721,513 disclose improved antiradar screens in the form of a plurality of overlapping (osculating) biconvex lenses. A line tangent to the edges of these lenses determines the contour of an arcuate keel edge of the screens. A search radar whose energy is striking this contoured edge in the plane which passes through the edges and centers of the lenses can detect only a cross-section of conductive material above the detection threshold of the radar. The cross-section of each of the lenses is chosen to be below such detection threshold. The screen is otherwise shaped such that incident radiation striking the screen outside of the edge plane also encounters a cross-section which is below the detection threshold of the radar. This is accomplished by maintaining the angle formed by the juncture of the surfaces of the screen, at the keel edge, below a value which is determined by the type of radar used and the vehicle distance from the radar.

An antiradar screen such as that just discussed must be stowed in the vehicle during launch and deployed to its operational configuration after orbit is achieved. Stowage and deployment of the screen may be accomplished in various ways. By way of example, the screen structure of copending application Ser. No. 04/593,233 is deployed in orbit by inflation of a tubular frame structure supporting the conductive skirts of the screen.

SUMMARY OF THE INVENTION

The present invention provides a novel deployable crossed skirt antiradar screen structure which is designed for use on a space vehicle, particularly an orbiting satellite vehicle, having members projecting laterally from the main vehicle body. These projecting members may be cross arms, solar panels, linear antennae, or other projecting devices.

The crossed skirt antiradar screen structure of the invention includes a primary radar screen enclosing the main body of the space vehicle and auxiliary radar screens enclosing the projecting members. The several radar screens have the biconvex lens configuration disclosed in copending application Ser. No. 04/721,513. The present radar screen structure may be designed to totally deny the detection of the space vehicle by ground based radar systems or merely modify the vehicle radar signature to resemble another space vehicle, such as a decoy.

In one disclosed form of the invention, the conductive skirts of the primary and auxiliary radar screens are physically and electrically joined to form, essentially, a single conductive skirt structure having a longitudinal portion enclosing the vehicle body and lateral portions enclosing the projecting members of the body. In another disclosed from of the invention, the primary and auxiliary radar screens have separate conductive skirts.

A feature common to both forms of the invention is the particular formation of interior corners by the conductive skirts of the primary and auxiliary radar screens. According to an important feature of the invention, the skirts are shaped and arranged in a manner such that these interior corners have oblique angles which prevent retroreflection of an illuminating radar beam from a ground based radar detection site back to the site. According to the preferred practice of the invention, for example, each interior corner defined by the skirts of the primary and auxiliary radar screens have an angle equal to or greater than 100°.

Stowage and deployment of the present crossed skirt antiradar screen structure may be accomplished in any convenient way. For example, the screen structure may be deployed by the phenumatic deployment technique of copending application Ser. No. 04/593,233 or by elastic strain energy.

BRIEF DESCRIPTION OF THE DRAWINGS

In the drawings:

FIG. **1** is a perspective view, partly in section, of an antiradar screen structure according to the invention;

FIG. **2** is an enlarged section taken on line 2—2 in FIG. **1**;

FIG. **3** illustrates the screen structure during deployment;

FIGS. **4** and **5** illustrate the biconvex lens theory upon which the radar screen is based;

FIG. **6** is a perspective view of a modified antiradar screen structure according to the invention; and

FIG. **7** is a plan view of the modified screen structure on reduced scale.

DESCRIPTION OF THE PREFERRED EMBODIMENTS

FIGS. **1** through **5** of the drawings illustrate a space vehicle V, in this instance an orbiting satellite vehicle, equipped with a crossed skirt antiradar screen structure S according to the invention. Vehicle V has a main body B mounting large deployable members M, referred to hereafter as cross arms, which project laterally from opposite sides of the body. These cross arms may be solar panels, linear antennae, or any of a variety of other devices which are commonly required on orbital satellite vehicles. During launch, the cross arms are retracted to stowed positions within the behicle body B. The arms are deployed to their extended positions in orbit.

The antiradar screen structure S includes a primary or body radar screen **10** enclosing the main vehicle body B and auxiliary or cross arm radar screens **11** enclosing the cross arms M. These radar screens are similar in construction to the radar screen of copending application Ser. No. 04/593,233. Thus, the screens have an inflatable frame **12** composed of thin-walled plastic tubes **13** which are arranged and joined in the manner shown with their passages in communication with one another and with a source (not shown) of inflation gas on the space vehicle V. Frame **12** is attached to the vehicle by plastic tubes or struts **14**. Covering the frame are electrically conductive skirts **15** consisting of thin wire mesh whose grid dimensions are small with respect to the wavelength of search radar. To these radar wavelengths, the skirts behave as reflecting surfaces. The wire mesh **15** may be woven into or otherwise supported by a thin plastic membrane **16** secured to the frame tubes **13**.

During launch the cross arms M are retracted to stowed positions within the space vehicle body B and the radar screen structure S is collapsed and gathered about or witin a stowage space in the body as shown in FIG. **3**. The stowed screen is enclosed by covers **17** which are jettisoned in orbit. Gas under pressure is then fed to the frame tubes **13**, **14** to inflate the same and thereby expand the screen structure to its fully deployed configuration of FIGS. **1** and **2**. In this regard, it should be noted that the screen frame **12** is designed to assume, when inflated, the illustrated deployed configuration by appropriate shaping of the frame tubes and, if necessary, utilization of guy wires (not shown). Moreover, the plastic membrane **16** on the frame **12** is sized to stretch edgewise as the frame inflates to its final configuration. This stretching of the membrane stretches the thin wires of the conducting skirts **15** beyond their elastic limit, thereby permanently setting the skirts in their deployed configuration.

The membrane **16** may be constructed of a material which photolyzes in the vacuum environment of space under the radiation of the sun. It is also possible to have a preselected group of the frame tubes **13** photolyze leaving only those necessary for structural rigidity. A material which may be used for the subliming plastic is disclosed in "Material and Design Engineering", June 1966, page 32. The material is called "Photo-Lyzing Film" by the manufacturers, Goodyear Tire and Rubber Company. The wire mesh **16** could be replaced with a thin sheet of metal foil. The metal foil type skirt will have a greater weight than the wire mesh, however, and it will also increase the aerodynamic drag of the entire structure which may be undesirable in certain applications.

The shape of the antiradar screens **10**, **11** is based on the lens-element theory of radar cross-section control and is designed to produce a constant magnitude signal at the search radar receiver. This theory relies on the electromagnetic reflection properties exhibited by a conducting biconvex lens. For such a lens illuminated edge-on, that is illuminated along the edge plane which is defined by the plane which passes through the edge (circumference) and the center of the lens, the maximum radar backscatter occurs when the polarization vector of the incident radiation lies in the lenses edge plane. This theory was disclosed in "A Theoretical Method for the Calculations of the Radar Cross Sections of Aircraft and Missiles", University of Michigan, Dept. of Elect. Eng., July 1959 by Crispin, J. W., et al. By convention, this orientation of the incident radiation in the lenses edge plane will be called parallel polarization and the resulting cross-section will be designated π. The orthogonal polarization will be designated π.

For small lens edge angles, π can be computed from the return of a wire loop replacing the lens edge. For a wire radius-to-wavelength ratio =1/85, the edge-on maximum cross-section becomes

$$\pi=\pi\rho^2[J_0(2\kappa\rho)-J_2(z\kappa\rho)]^2=4\,\pi\rho^2[J'_1(2\kappa\rho)]^2 \quad (1)$$

where

λ=wavelength of incident radiation;

ρ=radius of wire loop;

$\kappa={}^2\pi/\lambda$.;

J_n is the bessel function of the nth order; and

$J'z_n$ (x) is the derivative of J_n with respect to x.

For other edge radii, wire thickness, equation (1) should be multipled by a corrective factor F given by

$$F=\frac{(\pi/2)^2+[\ln(85/\gamma\pi)]^2}{(\pi/2)^2+[\ln(\lambda/\gamma\pi b)]^2} \quad (2)$$

where δ=1.78 . . . and b is the equivalent wire radius. The wire radius-to-wavelength ratio of 1/85 was chosen to simplify equation (1). The envelope of equation (1) is computed to be

$$\frac{2\rho\lambda}{\pi}.$$

Thus, one can write the following dominating expression for the maximum edge-on lens radar cross-section

$$\Pi \leq \frac{2\rho\lambda F}{\pi} \tag{3}$$

If π is now compared with the detection threshold cross-section of a searching radar, then the simple lens-element theory which is defined by these makes two assumptions. One, that equation (3) with the equality sign applies to all points along the flight path of the satellite vehicle, and two, outside of the vehicle's flight path the equivalent lens is thin enough so that its cross-section still lies below the detection threshold of the searching radar.

FIGS. **4** and **5** illustrate the application of this theory to the design of an antiradar screen for an orbiting satellite in the range of a detection radar **18**. The vehicle orbits the earth in a fixed orientation relative to the earth wherein an axis A normal to the intersecting longitudinal axes of the body and cross arm skirts points toward the earth. The radar properties (illumination frequency), and the radar screen's orbit altitude H, and payload dimension are first selected. The radar distance R to the screen as a function of the aspect angle Θ from the verticle is calculated. The radar distance R is given by the expression

$$R = (r_e + h)\cos\theta - \sqrt{r_e^2 - (r_e + h)^2\sin^2\theta} \tag{4}$$

where r_e is the earth's radius and the screen's orbit direction lies in the plane of the drawing.

For each angle Θ, there is a unique R which increases with Θ. Correspondingly, for a particular Θ there is one unique biconvex lens, i.e., L_1, L_2, and L_3, whose radar cross-section viewed in its edge plane is just below the detection threshold of the given radar and whose properties viewed outside this plane are such that it also lies below the detection threshold of the given radar. Thus, for a given threat radar, the screen's design value of π is fixed for each value of R or Θ that is:

$$\Pi = \Pi|_{\substack{\theta=o \\ R=h}} \times \left(\frac{R}{h}\right)^4 \tag{5}$$

Equations (2) through (5) define a lens-element contour C which determines an external contour for the keel edge **19** of each screen **10**, **11**. In other words, the keel edge contour is defined by a series of overlapping, or in mathematical terms "osculating", lenses, which are appropriately terminated in the electromagnetic shadow zone resulting in the simple conducting lens-element shape shown. This edge contour varies from angle to angle in the plane of the screen's direction of motion increasing in radius with Θ. A comprehensive disclosure of this biconvex lens theory as applied to a vehicle radar screen is contained in applicant's copending application Ser. No. 721,513, filed Apr. 8, 1968 entitled "Radar Screen (U)".

Referring to FIGS. **1** and **2**, the screen keel edges **19** have a variable sharpness or edge angle a to further refine the biconvex lens edge effect. Thus, it will be observed that the edge angle a increases toward the outer ends of the keel edges. If this edge sharpness is not varied there will be a degradation in the screen effect. FIG. **2** illustrates a portion of the body screen keel where the edge is very sharp.

There are six independently adjustable design parameters of each skirt **15**. The first two, edge sharpness and radius of curvature of the keel, control the skirt's signature in its edge plane. The next two parameters, edge angle and the curvature of the skirt surfaces, control the signature in a plane normal to the skirt's edge. The last two, leakage and warp and woof sizes (size and shape of skirt screen mesh), control the polarization characteristics of the signature.

In summary, the antiradar screen structure S of this invention is erected around the space vehicle V to simplify its radar signature so that decoys may be used in combination with the screened vehicle to confuse, delay, and/or eliminate final detection. Upon illumination by a ground based search radar, the antiradar screen structure re-radiates only a small amount of energy in the backscattering direction. Both the reflected incident energy and the energy radiated from the screen structure by currents induced in the conducting skirts **15** are exceedingly small in the backscattering direction.

In the particular inventive embodiment illustrated in FIGS. **1** through **5**, the conductive skirts **15** of the screens **10**, **11** are physically and electrically joined along corner edges **20**. Thus, the skirts effectively constitute a single unitary skirt which encloses and thereby controls and reduces the radar cross-section of the entire satellite vehicle V. The screens thus form a number of interior corners. According to a feature of the invention, the radar skirts are shaped and arranged in a manner such that each interior corner has an oblique angle b of sufficient magnitude to avoid a corner reflector effect which would produce retroreflection of an illuminating radar beam from a ground radar detection site back to the site. According to the preferred practice of the invention, for example, each interior corner has an angle b equal to or greater than 100°.

FIGS. **6** and **7** illustrate a modified antiradar screen structure S' according to the invention having a main body screen **110** for the body B of the satellite vehicle V and auxiliary or cross arm screens **111** for the vehicle cross arms M. The body screen **110** has essentially the same shape and construction as the body screen **10** in FIGS. **1** through **5** and includes an electrically conductive body skirt **115** of essentially the same biconvex lens configuration as the body skirt **15** in FIGS. **1** through **5**. The body skirt **115** is supported on an inflatable flexible tubular frame (not shown) which is attached to the vehicle body B and is inflatable to expand the screen **10** to its illustrated deployed configuration in essentially the same manner as the screen in FIGS. **1** through **5**.

The cross arm screens **111** have electrically conductive skirts **116** of essentially the same biconvex lens configuration as the body skirt **115**. The physical dimensions of the cross arm skirts, however, are smaller than those of the body skirt owing to the relatively small size of the cross arms M compared to the vehicle body B. Skirts **116** are mounted on inflatable flexible tubular frames (not shown) which are attached to the cross arms M and are inflatable to expand the skirts to their deployed configurations illustrated, after deployment of the arms to their illustrated extended positions, in much the same manner as the body skirt. A major difference between the radar screen structure S' of FIGS. **6** and **7** and the earlier screen structure S' of FIGS. **1** through **5**, resides in the fact that the inner ends of the cross arm skirts **116** terminate in spaced relations to the body skirt **115**. Accordingly, the body and cross arm skirts are both physically and electrically isolated from one another.

In this particular embodiment of the invention, it is necessary to make each skirt of the radar structure S' as thin as possible to increase the angular region over which the skirt is effective to control the radar cross-section of its respective member, i.e., either the vehicle body B or cross arms **11**. The cross arm skirts then exercise signature control over a wide angle beneath the satellite vehicle B. In opera-

tional use of the screen structure S', illumination of an exposed portion of the cross arms M in the region between the body skirt **115** and a cross arm skirt **116** produces a main lobe of reflected radar energy which is broken up by the skirts and thereby converted to an erratic signature. The erratic radar signature may be readily simulated by a pin-cushion decoy of the type disclosed in copending application Ser. No. 591,395 by providing the decoy with selected microwave reflectors or dipoles of the proper resonant frequency.

It will be observed in FIG. **7** that the corner reflection effect may occur in the event of radar illumination of the screen structure S' within a very narrow range to either side of normal incidence, i.e., illumination of the screens by a radar beam arriving substantially in a plane normal to the skirt surfaces. However, it is evident that illumination of the screen structure by ground based detection radar will always occur within a range of incidence angles substantially less than normal incidence. Within this latter range, the interior corners defined by the body and cross arm skirts **115** and **116** will always present to the illuminating radar effective interior corner angles in the plane of the illuminating radar beam which are sufficiently large, i.e., equal to or greater than 100°, to avoid the corner reflector effect and thereby prevent retroreflection of radar energy.

What is claimed as new in support of Letters Patent is:

1. An antiradar screen for a space vehicle having a main body and a cross arm projecting laterally from said body comprising:

a body screen including a hollow electrically conductive skirt constructed of an electrically conductive screen mesh for at least partially enclosing said vehicle body; and

a cross arm screen including a hollow electrically conductive skirt constructed of an electrically conductive screen mesh and projecting laterally of said body skirt for at least partially enclosing said vehicle cross arm.

2. A radar screen according to claim **1** wherein:

the inner end of the cross arm skirt is physically and electrically joined to said body skirt.

3. A radar screen according to claim **2** wherein:

said skirts define a number of interior corners; and

the interior angle of each said corner is substantially greater than 90°.

4. A radar screen according to claim **1** wherein:

the inner end of said cross arm skirt terminates in spaced relation to said body skirt; and

said skirts are arranged to break up the main lobe of radar energy reflected from said cross arm between said skirts.

5. A radar screen according to claim **4** wherein:

said skirts define a number of interior corners; and

the interior angle of each said corner being at least substantially equal to 100° in planes other than a plane normal to said body and cross arm skirts.

6. A radar screen according to claim **1** wherein:

said vehicle is launched into orbit about the earth in a fixed attitude wherein an axis of said radar screen points toward the earth; and

each said skirt has a keel edge transverse to said axis whose contour is defined by a plurality of biconvex lens-elements arranged adjacent to one another along said edge and increasing in radii outwardly along said edge away from said axis according to a function of the aspect angle which the skirt presents to a radar on the earth, said lens-elements being joined to form a single osculating structure.

* * * * *

United States Patent [19]

Slager et al.

[11] **4,419,669**

[45] **Dec. 6, 1983**

[54] **CONTROLLED SCINTILLATION RATE DECOY**

[75] Inventors: **Donald M. Slager**, Long Beach; **William C. Barker**, Pacific Palisades, both of Calif.

[73] Assignee: **TRW Inc.**, Redondo Beach, Calif.

[21] Appl. No.: **103,906**

[22] Filed: **Jan. 4, 1971**

[51] **Int. Cl.**[3] **H01Q 15/14**; G01S 7/38

[52] **U.S. Cl.** ..... **343/18 D**; 343/18 E

[58] **Field of Search** ..... 343/6.8 R, 18 D, 18 E

[56] **References Cited**

U.S. PATENT DOCUMENTS

3,108,275	10/1963	Chisholm	343/18 E
3,158,862	11/1964	Chisholm	343/18 D
3,283,324	11/1966	Norman	343/18 E
3,787,856	1/1974	Pyrah	343/18 D
4,117,485	9/1978	Gorr et al.	343/18 E

Primary Examiner—T. H. Tubbesing

Attorney, Agent, or Firm—Robert W. Keller; Donald R. Nyhagen

[57] **ABSTRACT**

A controlled scintillation rate decoy having microwave reflectors for reflecting incident radar energy in a manner to provide the decoy with a selected radar cross-section, and variable electrical impedance control means connected in electrical circuit with the reflectors for controlling the scintillation magnitude or scintillation rate of the decoy.

10 Claims, 5 Drawing Figures

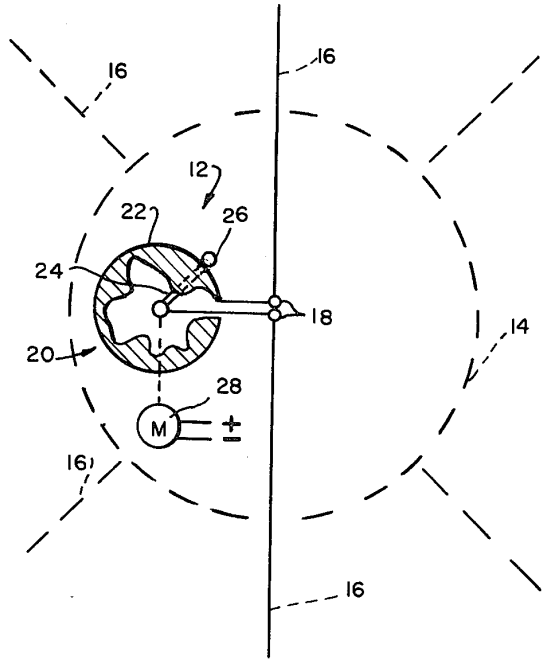

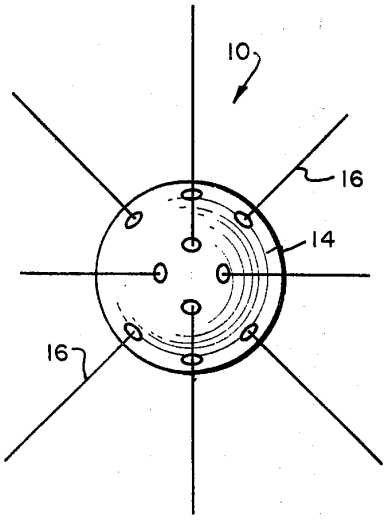

Fig. 1

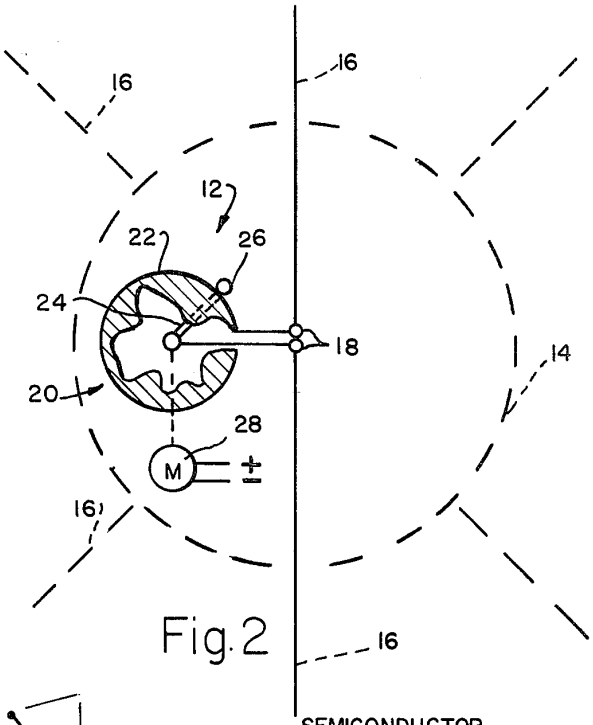

Fig. 2

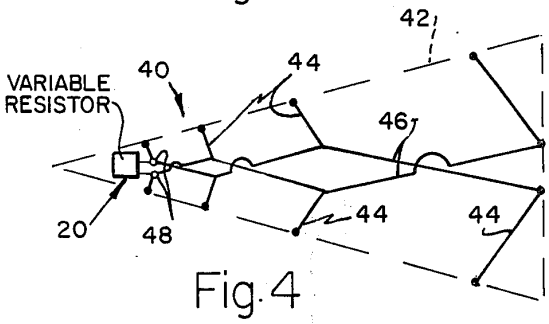

Fig. 4

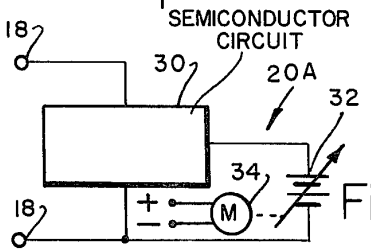

Fig. 3

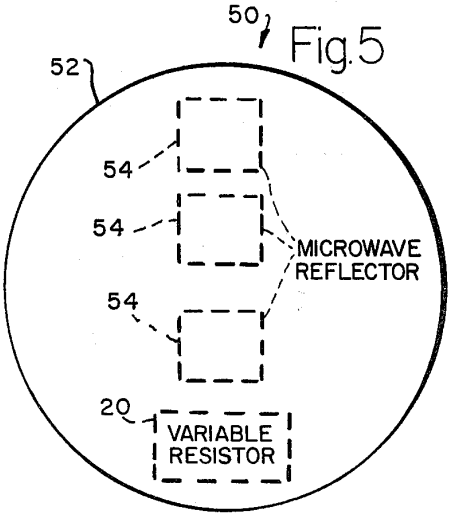

Fig. 5

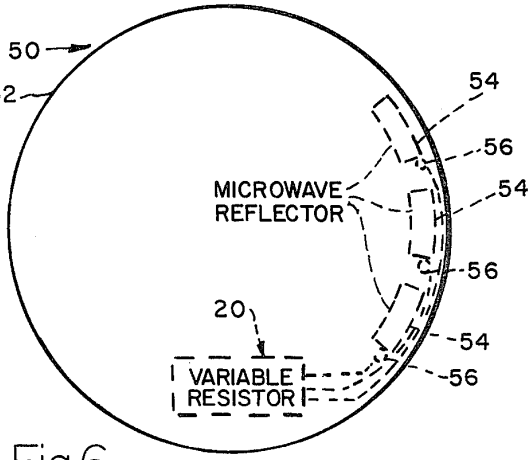

Fig. 6

CONTROLLED SCINTILLATION RATE DECOY

RELATED APPLICATIONS

Reference is made here to pending application Ser. No. 591,395, filed Oct. 28, 1966, entitled "Radar Target Simulator (U)".

BACKGROUND OF THE INVENTION

1. Field of the Invention

This invention relates generally to radar decoys and more particularly to such a decoy having means for varying its scintillation magnitude or scintillation rate.

2. Prior Art

A variety of techniques have been devised to modify or reduce the radar cross-section or signature of a space target, such as a missile or satellite, to prevent its identification by search radar. Modification of the target's signature in many cases is not totally effective, and therefore target simulators or decoys are used to further inhibit indentification of the real target. In order to be effective for this purpose, the decoy must duplicate the target vehicle's radar cross-section or signature, as well as its speed and body motions. Targets of appreciable size such as spacecraft have a broad band frequency response which necessitates a target simulator or decoy of similar band width.

The radar cross-section of a typical decoy is aspect sensitive. That is to say, a decoy, when illuminated by a radar beam, exhibits variations, termed scintillation, due to its body motion as seen from the radar site. If this variation or scintillation is sufficiently unlike that of the target, a basis for discrimination exists and the effectiveness of the decoy is substantially reduced. In general, scintillation is also dependent upon the frequency of the illuminating radar, with higher radar frequencies resulting in higher scintillation rate.

SUMMARY OF THE INVENTION

This invention provides an improved radar decoy having means for controlling and varying its scintillation or scintillation rate over a wide range without altering either the physical structure or body motion of the decoy. The scintillation is varied in random fashion at a relatively slow rate to simulate the varying scintillation of a full size target space vehicle, such as a screened ballistic missile. Such scintillation control may be applied to any missile or satellite decoy whose physical structure provides the equivalent of electrical terminals, such as dipole elements, which are required for electrical continuity, and between which a variable electrical impedance may be applied to vary the effective scintillation rate of the decoy. One disclosed embodiment of the invention, for example, is a pincushion decoy similar to that disclosed in copending application Ser. No. 591,395, wherein the equivalent terminals are provided by selected dipoles of the decoy. Another disclosed embodiment of the invention is a re-entry vehicle decoy having sets of interconnected dipoles providing equivalent terminals. Yet another embodiment of the invention is a so-called Luneberg lens in which the equivalent terminals are provided by microwave reflectors on the surface of the lens.

According to the invention, scintillation control is accomplished by connecting between the equivalent electrical terminals of the decoy an electrical impedance whose impedance value is varied in some way during the flight of the decoy. In one disclosed embodiment of the invention, for example, the variable impedance is provided by a motor driven variable resistance device connected between the equivalent terminals of the decoy. In another disclosed embodiment, the variable impedance is provided by a solid state electrically variable impedance circuit. In both embodiments, the variable impedance applied between the equivalent terminals varies the scintillation magnitude or scintillation rate of the decoy. Scintillation rate may also be made to depend upon the frequency of the illuminating radar in order to prevent utilization of discrimination techniques based upon frequency diversity.

BRIEF DESCRIPTION OF THE DRAWINGS

In the drawings:

FIG. **1** illustrates a pincushion decoy equipped with a present scintillation control means;

FIG. **2** illustrates the scintillation control means;

FIG. **3** illustrates a modified scintillation control means according to the invention;

FIG. **4** illustrates a reentry vehicle decoy equipped with a present scintillation control means; and

FIGS. **5** and **6** illustrate a Luneberg lens equipped with a present scintillation control means.

DESCRIPTION OF THE PREFERRED EMBODIMENTS

FIGS. **1** and **2** illustrate a pincushion decoy **10**, similar to that disclosed in copending application Ser. No. 591,395, embodying scintillation control means **12**, according to the invention. Decoy **10** has a spherical body **14** mounting a number of microwave reflectors **16** in the form of projecting dipoles arranged in sets as explained in the copending application. The reflectors consist of dipoles of various lengths and hence various resonant frequencies electrically connected through a controllable impedance at their inner ends within body **14**. The dipoles of the different sets have different resonant frequencies and may differ in number, all as explained in the copending application. By selectively varying the number and resonant frequency of the dipoles of the different sets, a composite radar signature may be created which duplicates the radar signature of the protected satellite or missile. Simulation or duplication, by the decoy, of the ballistic coefficient of the protected missile or satellite may be accomplished by providing the body of the decoy with the proper density.

As noted earlier, the present invention may be applied to any missile or satellite decoy whose physical structure provides the equivalent of electrical terminals between which a variable electrical impedance may be applied to control or vary the scintillation of the decoy. The scintillation control means **12** comprises means for varying the reflectivity of the reflectors **16** in such a way as to produce a varying scintillation effect. In the particular decoy **10** illustrated the scintillation control means comprises equivalent terminals **18** provided by a pair of diametrically opposed dipoles **16** of the decoy, and variable electrical impedance means **20** connected between the terminals. A variety of variable impedance means may be utilized in the decoy. The variable impedance means shown is a motor driven variable resistance device.

Variable resistance device **20** comprises a generally annular, radially slotted resistor **22**, an arm **24** rotatable about the center of the resistor, a wiper **26** on the arm which bears against the outer circumference of the

resistor, and a motor **28** for driving the wiper arm in rotation and thereby the wiper around the resistor. One dipole terminal **18** is connected to the resistor **22**. The other dipole terminal is connected to the inner end of the wiper arm **24**. As shown, the radial width of the resistor **22** varies in a manner such that its electrical resistance, measured between the dipole terminals **18**, varies as the wiper **26** travels about the resistor. This variable electrical resistance is applied between the terminals **18** and varies the scintillation magnitude or scintillation rate of the decoy in addition to the variation in scintillation rate of the decoy produced by its body motion. Thus, introduction of the variable resistance between terminals **18** causes the radar cross-section of the decoy to vary as the resistance is changed from the characteristic resistance of the dipoles (about 70 ohms) to either higher or lower values. In actual practice, it is preferable to use lower resistance values ranging from the above characteristic dipole resistance to essentially a short circuit. The scintillation magnitude or scintillation rate of the decoy may be concentrated in selected frequency bands by selection of the proper variable resistance range and the proper dipole elements.

FIG. **3** illustrates a variable impedance means or circuit **20A** which may be employed in the decoy **10** in place of the variable resistance device **20**. This variable impedance circuit comprises a semiconductor means **30** which is connected between the decoy dipole terminals **18** and whose electrical impedance is controlled by a variable d-c voltage source **32**. The adjustable element of this voltage source is driven by a motor **34** which causes the electrical impedance of the semiconductor means to vary in a predetermined manner.

While the drawings illustrate scintillation control by varying the electrical impedance between only a pair of dipoles, it will be understood that additional variable impedance means may be applied between other dipoles to effect greater control of the scintillation rate.

As noted earlier, the invention may be applied to any missile or satellite decoy whose structure provides the equivalent of electrical terminals between which a variable electrical impedance may be applied to control scintillation. FIGS. **5** and **6** illustrate two alternative decoy configurations whose scintillation may be controlled in this manner. The decoy **40** of FIG. **4** is a reentry vehicle decoy having a conical body **42** containing microwave reflectors or dipoles **44** interconnected by conductors **46**. This dipole arrangement provides terminals **48** between which a variable impedance means, such as means **20** or **20A**, may be inserted to control scintillation magnitude or rate.

The modified decoy **50** of FIGS. **5** and **6** is a Luneberg lens having a spherical body **52** constructed of a dielectric material whose dielectric characteristics vary in such a manner as to provide focussing of incident energy. At the right-hand side of the decoy body, as the decoy is viewed in FIG. **6**, are a number, in this instance three, microwave reflectors **54**. As is well-known to those versed in the art, such a Luneberg lens is effective to focus radar energy incident on the left side of the lens in FIG. **5** on a region along the right-hand circumference of the lens determined by the direction of the propagation vector of the incident radar energy. If the focal region of the radar energy includes two or more of the reflectors **54**, the energy is reflected back toward its source. This reflection, and hence the scintillation rate of the decoy, can be controlled by interconnection of a variable electrical impedance between the reflectors. To this end, reflectors **54** provide electrical terminals **56** between which a present variable impedance means **20** or **20A** is connected to control scintillation rate. It will be understood at this point that the invention provides a means for varying the reflectivity of the microwave reflectors in such a way as to introduce into radar energy reflecting from the decoy a randomly varying scintillation effect simulating the varying of a larger space vehicle such as a screened ballistic missile or a sateillite. In other words, the scintillation of the decoy is matched to that of a larger target vehicle. This requires that the reflectivity and hence decoy scintillation be varied in random manner and at a relatively slow rate on the order of a few cycles per second. The scintillation control means of the present decoy satisfies these requirements. The resistor **22** of FIG. **2**, for example, is provided with a randomly varying shape and its wiper **24** is driven at a relatively slow rotary speed.

We claim:

1. A controlled scintillation radar decoy comprising;
a decoy body;
microwave reflectors mounted on said body for reflecting incident radar energy in a manner to simulate the radar cross-section of a larger space vehicle to be protected; and
means for varying the reflectivity of said reflectors in random manner and at a relatively slow rate in such a way as to introduce into radar energy reflecting from the decoy a randomly varying scintillation effect simulating the varying scintillation of said space vehicle.

2. A decoy according to claim **1**, wherein:
said means comprises a motor driven variable impedance device.

3. A decoy according to claim **2** wherein:
said said device comprises an electrical resistor having an electrical resistance which varies along the resistor, a wiper engaging said resistor, and a motor for driving said resistor and wiper in relative movement to effect relative movement of said wiper along said resistor and thereby vary the electric resistance between said reflectors.

4. A decoy according to claim **3** wherein:
said resistor is a generally annular resistor, and said wiper is rotatable about the center of said resistor.

5. A decoy according to claim **1** wherein:
said means comprises an electronically variable impedance device.

6. A decoy according to claim **5** wherein:
said variable impedance device comprises a semiconductor means connected between said reflectors, means connected to said semicondutor means for varying the electrical impedance of the latter means.

7. A decoy according to claim **1** wherein:
said microwave reflectors comprise dipoles spaced about said body.

8. A decoy according to claim **1** wherein:
said body has a spherical shape; and
said microwave reflectors comprise dipoles projecting from said body.

9. A decoy according to claim **1** wherein:
said body has a conical shape; and
said microwave reflectors comprise dipoles embedded within said body.

10. A decoy according to claim **1** wherein:
said body constitutes a Luneberg lens; and
said microwave reflectors are disposed along one side of said body.

* * * * *

http://www.fas.org/spp/military/program/asat/at_001012.htm

From: Allen Thomson (thomsona@flash.net)
Subject: LES-8/9 : semistealthy?
Newsgroups: sci.space.history
Date: 2000/10/12

I recently came across the following, which is found on p.30 of "Semi Annual History of the Directorate of Space, Period of 1 January 1971 - 30 June 1971" The paragraph, originally classified SECRET, was declassified on 10 March 1996. According to a correspondent who, to my amazement, knows about such stuff, the DoS was a component of the office of the USAF Deputy Chief of Staff for Development (also known as DCS/D and later DSC/R&D), who was the Air Staff officer in charge of advanced development in the Pentagon.

"The MIT Lincoln Laboratory is involved in a program to demonstrate the technology necessary to deploy a highly survivable satellite communication system for command and control of the SIOP forces. The effort is based upon the use of two satellites (LES-8 and LES-9) carefully designed (both electronically and physically) so that detection of the satellite presence is extremely difficult. The satellites would use satellite-to-satellite communications links and would permit two way communications between aircraft and surface forces on a global basis. The anticipated launch of LES-8/9 is in September 1974."

"So that detection of the satellite presence is extremely difficult" is consistent with a rumor I'd heard earlier, that one of the two LESes was equipped with a plane mirror intended to send the line of sight of a terrestrial observer out into starry space.

It also represents the fifth or sixth confirmed or reasonably believable report of low-observable satellite studies, technology development efforts or actual programs stretching from the early 1960's to ca. 1990.

[Additional materials relating to LES-8/9 are provided in Appendix D.]

This patent is a reissue of patent US5250950

Title: USRE36298: Vehicle

Inventor: Scherrer, Richard; Nordland, WA
Overholser, Denys D.; Carson City, NV
Watson, Kenneth E.; No. Hollywood, CA

Assignee: Lockheed Martin Corporation, Bethesda, MD

Priority Number: 1995-10-05 US1995000539789
1979-02-13 US1979000011769

Abstract: A vehicle in free space or air, with external surfaces primarily fashioned from planar facets. The planar facets or panels are angularly positioned to reduce scattered energy in the direction of the receiver. In particular, radar signals which strike the vehicle are primarily reflected at an angle away from the search radar or are returned to the receiver with large variations of amplitude over small vehicle attitude changes.

Attorney, Agent or Firm: Oblon, Spivak, McClelland, Maier & Neustadt, P.C. ;

Primary / Asst. Examiners: Pihulic, Daniel T.;

Friday, Aug. 22, 1980
Pentagon News Conference
Secretary of Defense Harold Brown
Under Secretary of Defense William J. Perry
Lt. Gen. Kelly Burke, DCS for R&D

[EXCERPTS; Full text at Appendix B]

Mr. Thomas B. Ross, ASD/PA: Ladies and gentlemen, the ground rules are that everything written or spoken at this conference is on the record and not to be used until the press conference is over.

Dr. Brown: Good afternoon, ladies and gentlemen.

I am announcing today a major technological advance of great military significance.

This so-called "stealth" technology enables the United States to build manned and unmanned aircraft that cannot be successfully intercepted with existing air defense systems. We have demonstrated to our satisfaction that the technology works...

For three years, we have successfully maintained the security of this program. This is because of the conscientious efforts of the relatively few people in the Executive Branch and the Legislative Branch who were briefed on the activity and of the contractors working on it.

However, in the last few months, the circle of people knowledgeable about the program has widened, partly because of the increased size of the effort, and partly because of the debate under way in the Congress on new bomber proposals. Regrettably, there have been several leaks about the stealth program in the last few days in the press and television news coverage...

Dr. Perry:.. [T]his technology—theoretically at least— could be applied to any military vehicle which can be attacked by radar-directed fire. In our studies, we are considering all such applications and are moving with some speed to develop those particular applications which on the one hand are the most practical and on the other hand which have the greatest military significance. Finally, I can tell you that we have achieved excellent overall success on the program and that that has included flight tests of a number of different vehicles.

Q: Can these technologies also defeat other means of detection, such as thermal, and infrared and so on?

Dr. Brown: The general description of stealth technology includes ideas, designs that are directed also at reducing detectability by other means. Radar is the means that is best able to detect and intercept aircraft now. It's no accident that the systems that exist are radar systems. But stealth technology extends beyond radar. Bill, do you want to add anything there?

Dr. Perry: That is correct.

Q: I ask because you mention other vehicles and I wonder if you're getting ready to have a complete turnover in the whole military inventory, tanks, and all the rest.

Dr. Brown: It's a little too early to say that. I think what Bill was saying was that stealth technology is applicable against anything that is detected and attacked through detection by radar. But how practical it is for various kinds of vehicles is another matter...

Q: How about fighters, will it apply to fighter technology?

Dr. Brown: The same thing applies to fighters. I think you can apply this technology across the board. Bill? Do you want to be more specific?

Q: When you say all military vehicles, do you mean everything from ICBMS, to tanks, to ships, to everything?

Dr. Perry: In principle, it could be applied to any of them.

Dr. Brown: It doesn't help some as much as others.

Dr. Perry: It is our ability of applying it. The difference it would make in military effectiveness may be dramatically different from vehicle to vehicle.

Dr. Perry: The cost of applying it may be different.

Dr. Brown: Some vehicles aren't primarily detected with radar. They are detected by eyeball.

Shuttle Challenger Launched Toward Swashbuckling Adventure
Astronauts Scheduled to Retrieve and Repair Damaged U.S. Satellite in Space
The Washington Post, April 07, 1984,
By: By Thomas O'Toole, Washington Post Staff Writer
Section: A, p. 02

"Sources said Stealth material must be tested in space because the Air Force is considering development of Stealth satellites and even Stealth shuttle craft that could fly in orbit undetected by Soviet ground radar."

[See Appendix C]

http://www.fas.org/spp/military/program/imint/visibility.pdf
[EXCERPTS; Full text at Appendix A]

A PRIMER

OF

SELECTED VISIBILITY MEASUREMENT ISSUES

FOR

LARGE OBJECTS

July 1986

I. INTRODUCTION

This short note summarizes several issues related to making detailed optical measurements of large-scale objects. The issues involved are set within the context of selected assumptions and constraints developed to scope a very large and complex technical area. In the following section, the equivalency between the visibility of an object and selected measurement protocols is discussed. An evaluation of different approaches to developing a large scale measurement facility is provided in Section 3 to provide an intuitive feel for the differences between scanning and flood illumination. A summary of issues outstanding is presented in Section 4.

1. This note focuses uniquely on issues associated with developing a large-scale, ground-based, indoor measurement facility. Other approaches, e.g. outdoor ranges, table-top, small scale laboratory ranges, or in-situ space and field-testing approaches are excluded;

2. The analysis assumes a specific viewing geometry;

3. Only measurements of visible optical signatures have been addressed herein. No consideration has been given to thermal or infrared signatures or other signatures outside the visible frequency band;

4. This analysis was done to scope the range of problems that relate to measurements that validate an optical signature requirement. As such, this work does not address the precise optical requirement to be validated not the correctness or relevance of such a requirement. It is intended to identify problems that should be addressed in the future; finally,

5. This note does not address important issues related to an operational detectability assessment.

Figure 1. Issues to be Addressed

3. MEASUREMENT FACILITY ISSUES -- SCANNING VERSUS FLOOD ILLUMINATION TECHNIQUES

3.1 ASSUMPTIONS MADE

As will become apparent in subsequent parts of this section, an important parameter in evaluating trade-offs between scanning and flooding viability is the time required to make measurements corresponding to a whole body signature. Accordingly, this evaluation will be predicated on two assumptions -- more properly observations -- that mitigate the impact of unacceptably long scan-times. These assumptions include:

1. All test objects of interest will exhibit a preferential direction or orientation bias that will control the overall optical signatures in the viewing geometry of interest in this problem; and,

2. An initial, coarse grained preliminary scan may be done of the preferential surface -- by either (human) visual or electro-optical viewing techniques -- to identify physical areas that warrant fine-grained, detailed measurement (i.e. edges, corners, cracks, etc.).

The first assumption is based on the fact that many objects of interest will be protected with a large-shield. Moreover, many unshielded objects are deployed such that they orient themselves in a specific direction to accomplish their mission. The second assumption, acknowledges that certain easily observed regions of a space object are likely to dominate the optical signatures of the whole object whereas other regions will contribute little or nothing to the total optical cross-section.

3.2 REQUIREMENTS

Figure 8 shows three classes of objects in low and high altitude deployment modes. At high altitudes the objects appear as either points or barely imaged objects. At low altitudes the viewing aspect depends on the type of object--specifically on whether it is a "pointer" or "setter" and whether it is shielded.

DEPLOYMENT \ TYPE	UNSHIELDED "POINTER"	UNSHIELDED "SETTER"	SHIELDED OBJECT
LOW ALTITUDE	CHANGING ASPECT	RELATIVELY CONSTANT ASPECT	"CONSTANT" ASPECT
HIGH ALTITUDE	POINT OBJECT	N/A	POINT OBJECT

Figure 8. Object Deployment by Type.

3.3.2 Facility B Description

Figure 1Ø illustrates a possible configuration for the Concept B Facility. The key feature is a very large heliostat to provide illumination. The heliostat directs the illumination to a fixed mirror that, in turn, illuminates the object. The beam is large enough to completely illuminate the width of the object so that synthesis problems are largely eliminated. This might require the largest heliostat ever built, but optical quality requirements are minimal.

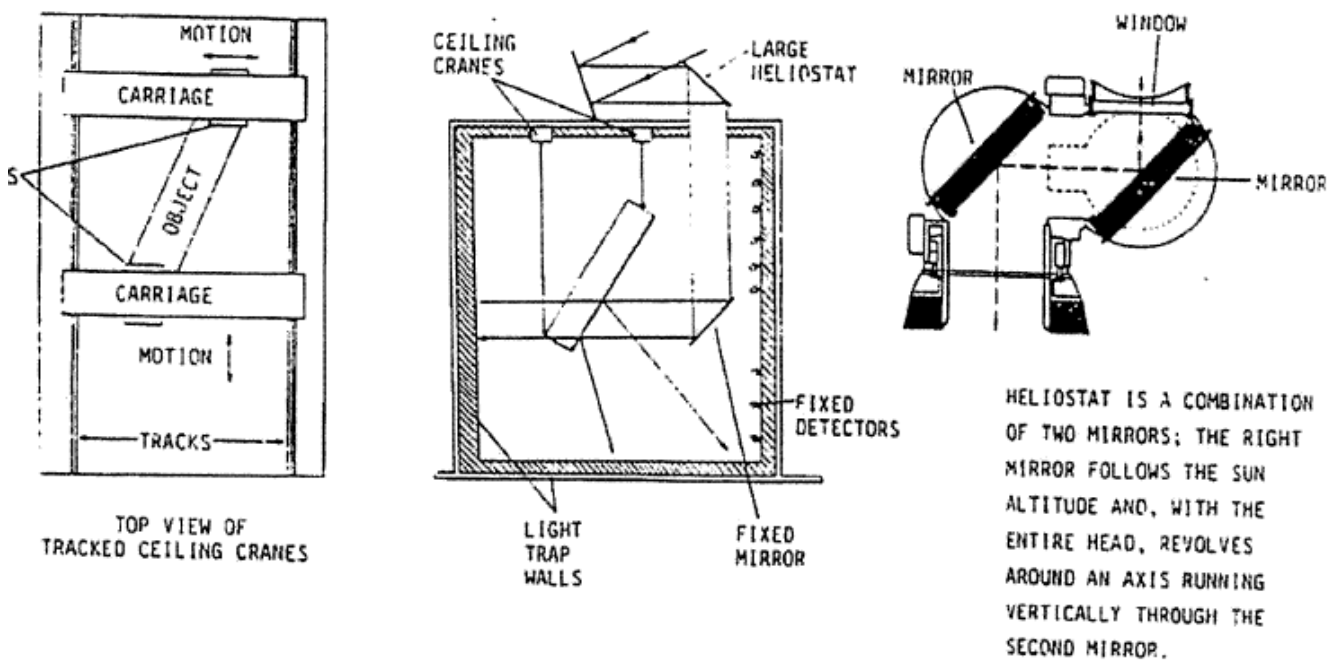

Figure 1Ø. Concept B
(Movable Object/Stationary Illumination).

U.S. Designs Spy Satellites To Be More Secret Than Ever
By William J. Broad
The New York Times
November 3, 1987
Late City Final Edition
Page C1
[EXCERPTS]

A battery of new technologies, some mature, others on the drawing board, will help the United States overcome Soviet efforts to deceive western spy satellites, according to former Government officials, space experts and private scientists.

For years, largely without public knowledge, the East and west have vied to fool each other's surveillance satellites and the military analysts who interpret top-secret photographs made from space.

Weapons in the war include camouflage, concealment, decoys and misleading deployments of real weapons. Both sides use ground-based radars and computers to track hostile satellites and to predict when they will pass overhead, allowing military units on the ground to hide or disguise sensitive operations.

The West has long been at a disadvantage in the war of deception because it is so difficult to keep fake operations and false deployments secret in an open society. But it has recently made several advances in ways to see through Soviet deception. By the 1990's, military experts say, western spy satellites will be nearly impossible to track and will be able to see through clouds and outwit enemy camouflage and decoys.

Peter D. Zimmerman, a physicist and senior associate at the Carnegie Endowment in Washington, said the new technologies would "make it enormously more difficult for the Soviets to conceal and deceive."

The KH-11 spy satellite launched last week by the United States boasts technologies that mark a first step in that direction.

For one thing, the KH-11 has powerful, lightweight engines that allow controllers on the ground to maneuver it in orbit. Future spy satellites will be capable of being refueled, dramatically extending their range and lifespan.

A second future technique is to build spy satellites out of materials, like those in the "stealth" aircraft, that absorb or disguise radar waves, making them invisible to enemy equipment.

The ultimate way to foster unpredictability is to be invisible - a top-secret endeavor being hotly pursued by designers of military satellites.

On earth, "stealth" techniques are widely used in military fighters, bombers and cruise missiles to reduce their visibility to enemy radars. Two main methods involve replacing metals with lightweight

composite materials that absorb radar signals, and smoothing body parts so they deflect radar signals rather than reflect them.

Congressional experts on weapons say the Pentagon Is hard at work applying stealth techniques to satellites, an assertion the Defense Department declined to discuss. It is known, however, that in April 1984 the space agency launched a four-ton cylinder[*] carrying experiments to develop new space-age materials, including secret ones for making stealth satellites.

"Camouflage in space" is essential if satellites are to outwit Soviet tricks, Mr. Codevilla said In "Soviet Strategic Deception," [**] a collection of reports published by the Hoover Institution, while it may be difficult to make satellites completely disappear from Soviet radar scopes, he said, the selective use of stealth techniques could easily disguise the true mission of spy satellites.

[*] The Long Duration Exposure Facility (LDEF). See Appendix C

[**] ”Space, Intelligence, and Deception,” Angelo M. Codevilla
Soviet Strategic Deception, Brian D. Dailey and Patrick J. Parker, editors
Proceedings of a Naval Postgraduate School conference on *Soviet Strategic Deception*,
September 26-28, 1985
Hoover Institution Press, 1987
ISBN 0-669-13208X

Stealth Satellite Test Conducted
Defense News
September 25, 1989, p.2

The Strategic Defense Initiative Organization announced last Friday that it had quietly launched on Sept. 4 and Sept. 11 two rockets to test stealth features for U.S. satellites. The suborbital satellites [sic] launched in the $6.6 million Starmate experiment were tracked by radars, as well as infrared, ultraviolet and visible sensors in their brief 10 minute flights. The rockets were launched from Kauai Test Facility in the Hawaiian Islands. The information will be used to increase the survivability of U.S. satellites, which face threats from Soviet ground- launched interceptors and from future space-mines and directed energy weapons, DoD officials say.

US005345238A

United States Patent [19]

Eldridge et al.

[11] Patent Number: 5,345,238

[45] Date of Patent: Sep. 6, 1994

[54] SATELLITE SIGNATURE SUPPRESSION SHIELD

[75] Inventors: **Morton T. Eldridge**, Madison; **Karl H. McKechnie; Richard M. Hefley**, both of Huntsville, all of Ala.

[73] Assignee: **Teledyne Industries, Inc.**, Los Angeles, Calif.

[21] Appl. No.: **494,278**

[22] Filed: **Mar. 14, 1990**

Related U.S. Application Data

[63] Continuation-in-part of Ser. No. 492,847, Mar. 13, 1990, abandoned.

[51] **Int. Cl.**[5] **H01Q 15/16**; H01Q 17/00

[52] **U.S. Cl.** **342/3**; 342/10; 342/2

[58] **Field of Search** 342/2, 4, 8, 10, 9, 342/3, 13

[56] **References Cited**

U.S. PATENT DOCUMENTS

3,064,534	11/1962	Tumavicus	342/10 X
3,115,630	12/1963	Lanford	342/10
3,122,743	2/1964	Vlasic	342/10
3,206,749	9/1965	Chatelain	342/10
3,220,004	11/1965	Gillespie, Jr.	342/10
3,327,308	6/1967	Henjum	342/10
3,568,191	3/1971	Hiester et al.	342/8
3,699,576	10/1972	Hoyer	342/10
3,773,684	11/1973	Marks	342/2 X
4,044,358	8/1977	Manning et al.	342/2
4,063,241	12/1977	Jouanno	342/8
4,170,010	10/1979	Reed	342/1
4,314,682	2/1982	Barnett et al.	342/3 X
4,740,056	4/1988	Bennett	342/8
4,825,599	5/1989	Swann, Jr.	342/10 X
4,901,081	2/1990	Bain, Jr. et al.	342/8

Primary Examiner—John B. Sotomayor

Attorney, Agent, or Firm—Beveridge, DeGrandi, Weilacher & Young

[57] **ABSTRACT**

An inflatable shield for suppressing the characteristic radiation signature of a satellite is described. The shield is conical-shaped and made from a thin synthetic polymer film material coated with a radiation reflecting material, such as gold or aluminum. At least one subliming agent is contained within the shield to inflate the shield when exposed to heat. An ultraviolet curable slurry coats the inner walls of the shield and permanently hardens the shield upon exposure to ultraviolet radiation from a self-contained source. The shield optionally may include absorbing and desiccant agents to absorb unwanted gas and water and prevent interference with the primary mission of the satellite. Additional means may be included for moving and positioning the shield with respect to the satellite.

22 Claims, 6 Drawing Sheets

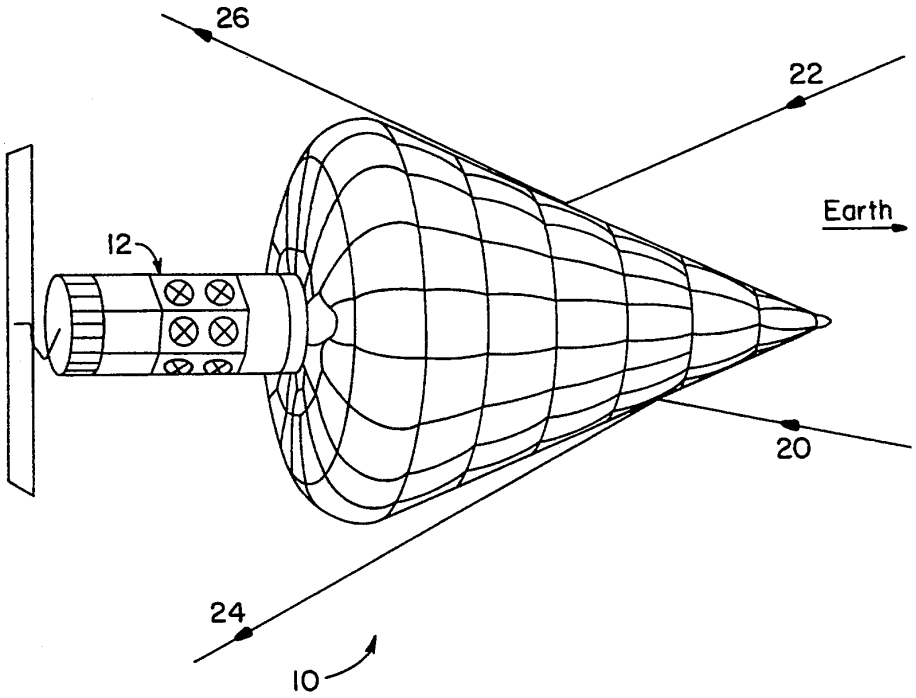

FIG. 1

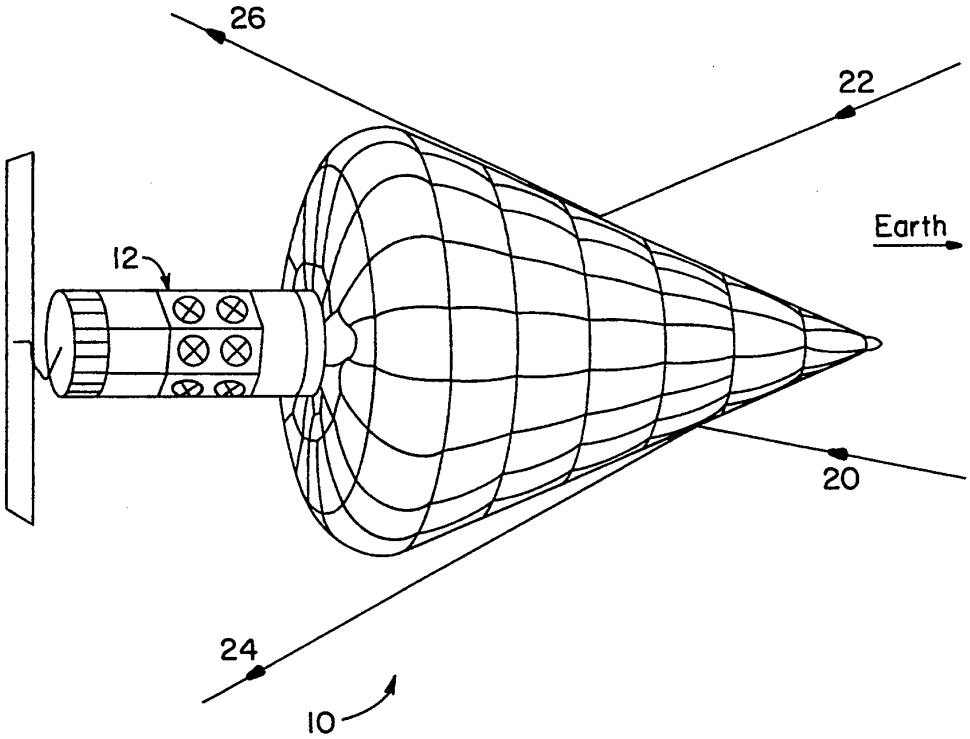

FIG. 2A

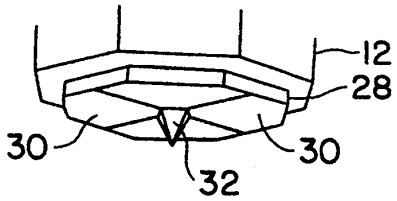

FIG. 2B

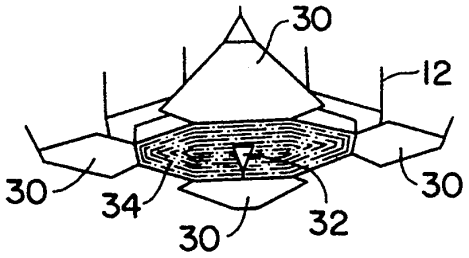

FIG. 2C

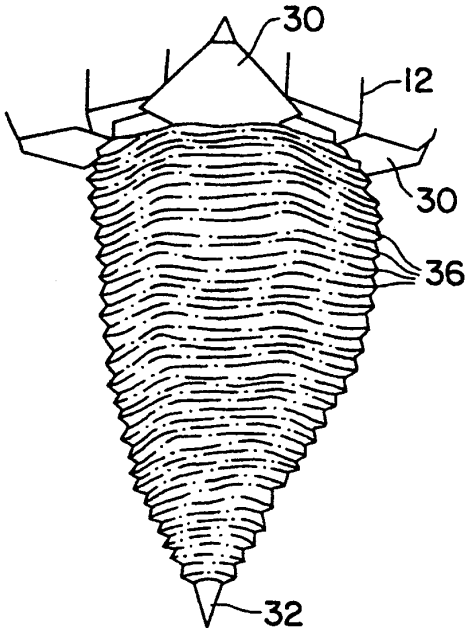

FIG. 2D

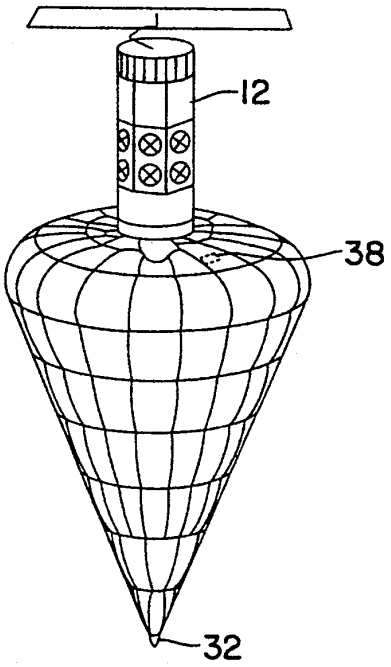

FIG. 3A

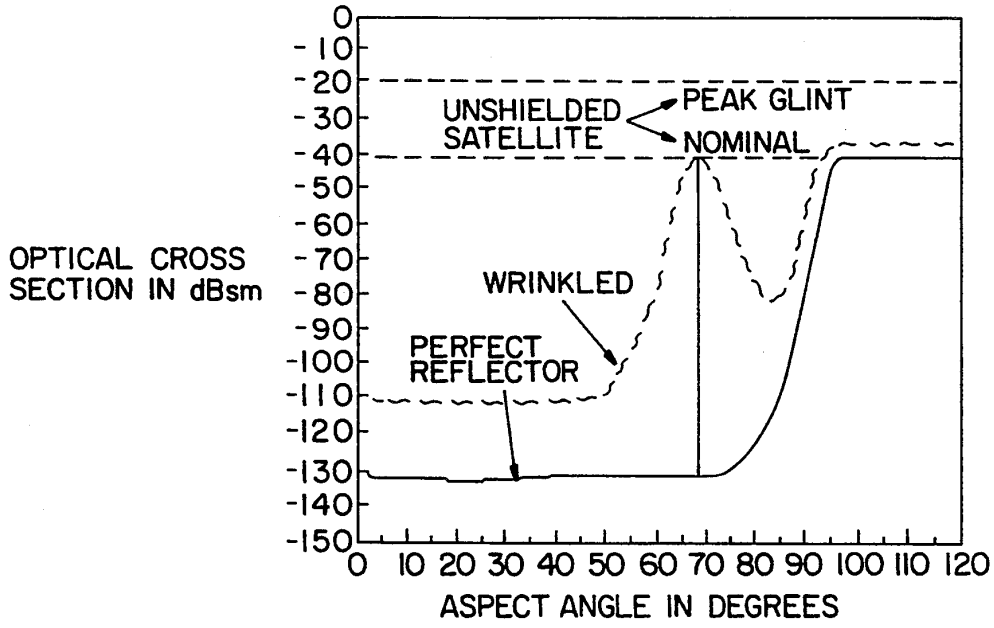
OPTICAL CROSS SECTION IN dBsm
0
-10
-20
-30
-40
-50
-60
-70
-80
-90
-100
-110
-120
-130
-140
-150
UNSHIELDED SATELLITE
PEAK GLINT
NOMINAL
WRINKLED
PERFECT REFLECTOR
0 10 20 30 40 50 60 70 80 90 100 110 120
ASPECT ANGLE IN DEGREES

FIG. 3B

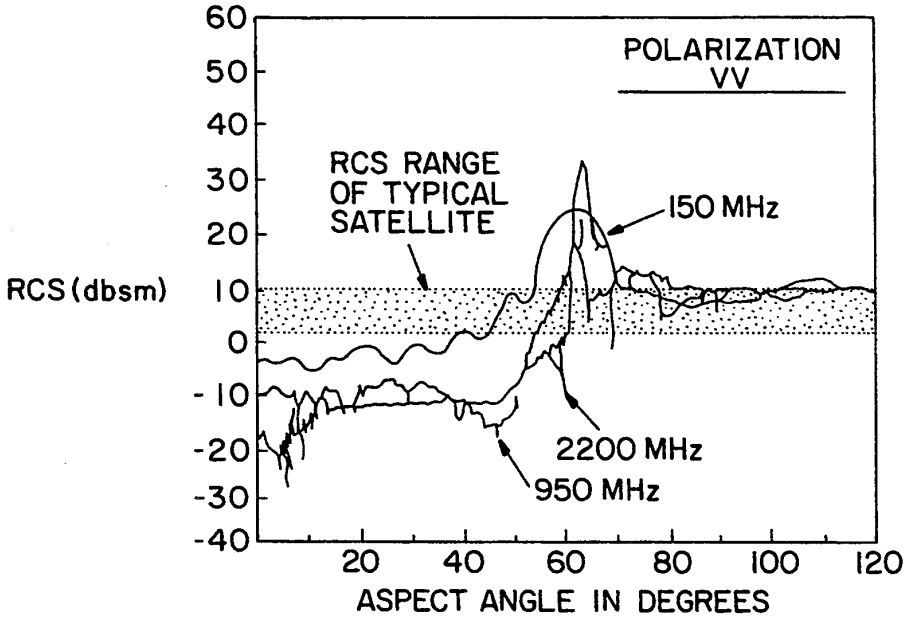
RCS (dbsm)
60
50
40
30
20
10
0
-10
-20
-30
-40
POLARIZATION VV
RCS RANGE OF TYPICAL SATELLITE
150 MHz
2200 MHz
950 MHz
20 40 60 80 100 120
ASPECT ANGLE IN DEGREES

FIG. 3C

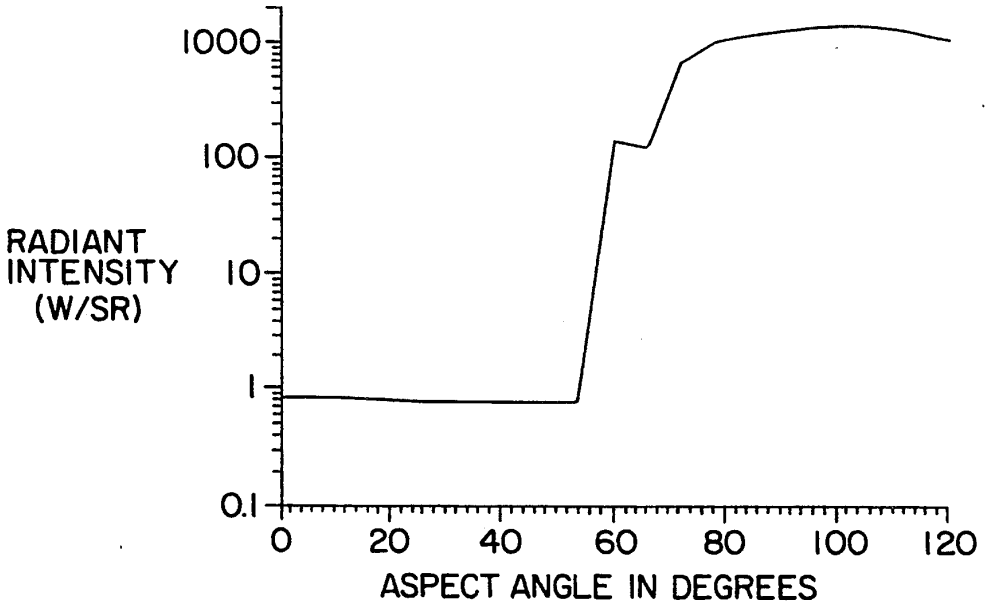
1000
100
10
1
0.1
RADIANT INTENSITY (W/SR)
0
20
40
60
80
100
120
ASPECT ANGLE IN DEGREES

FIG. 3D

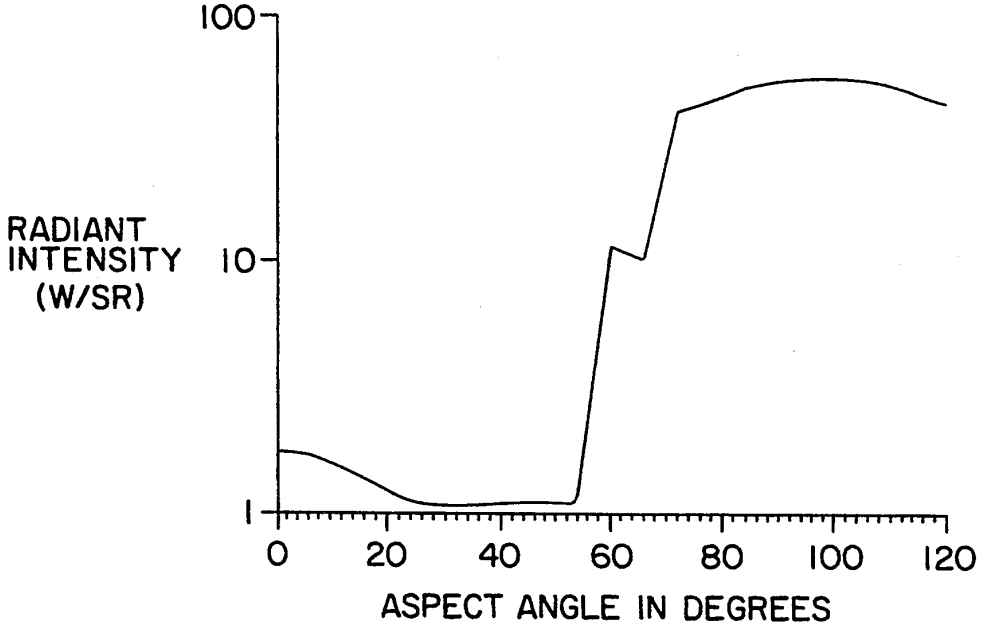
100
10
1
RADIANT INTENSITY (W/SR)
0
20
40
60
80
100
120
ASPECT ANGLE IN DEGREES

FIG. 4

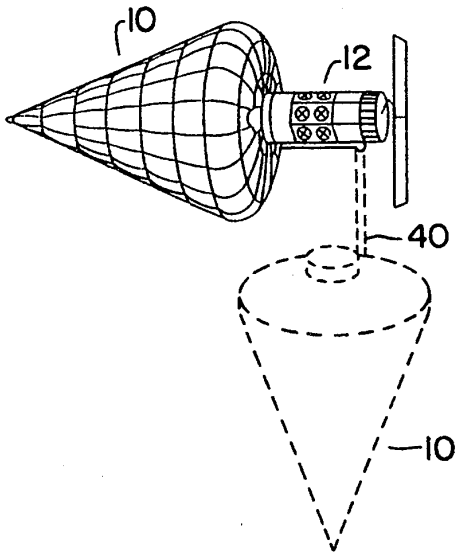

FIG. 5

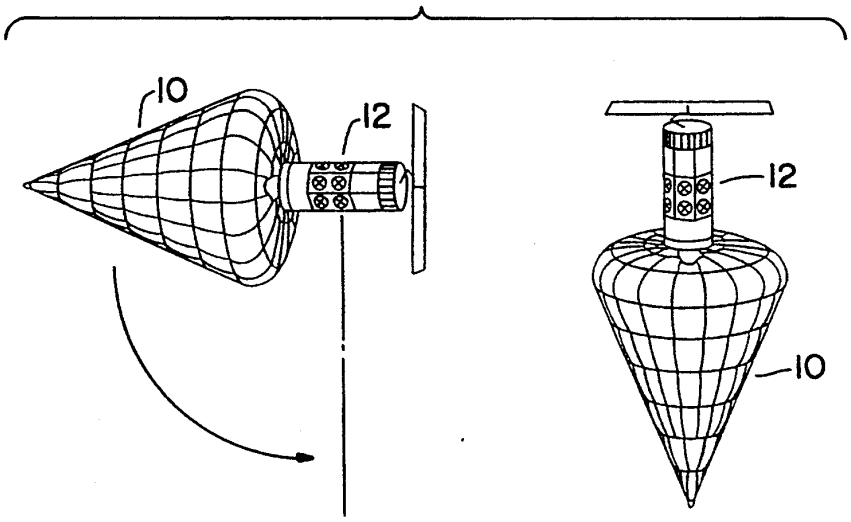

FIG. 6

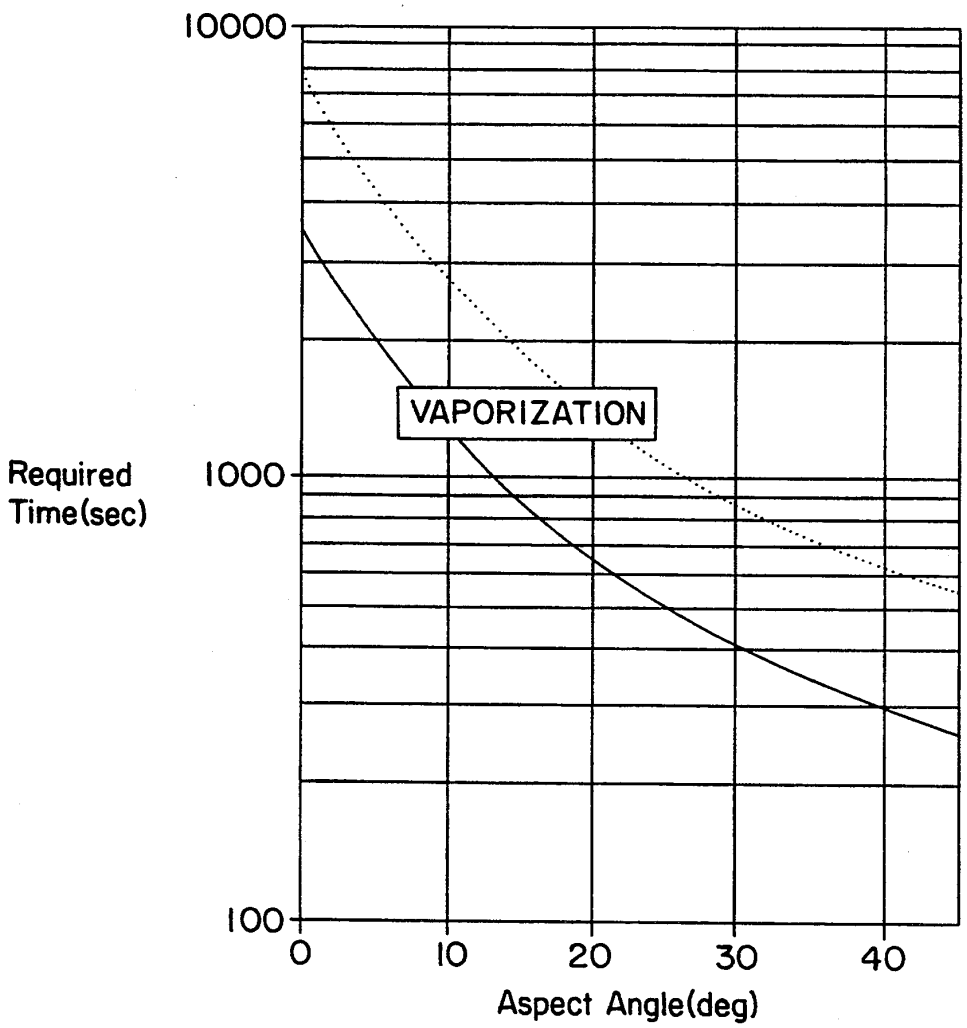
10000
1000
100
Required Time(sec)
VAPORIZATION
0
10
20
30
40
Aspect Angle(deg)

SATELLITE SIGNATURE SUPPRESSION SHIELD

RELATED APPLICATION DATA

This application is a continuation-in-part of U.S. patent application Ser. No. 07/492,847, filed Mar. 13, 1990, now abandoned.

BACKGROUND OF THE INVENTION

This invention relates to a satellite signature suppression shield for camouflaging a satellite's location from ground based and airborne tracking and detection systems. The purpose of the invention is to suppress the laser, radar, visible and infrared signatures of satellites to make it difficult or impossible for hostile enemy forces to damage or destroy satellites in orbit.

Several systems are known which are used to cripple or destroy orbiting satellites or other space vehicles. These systems may be ground based or space based. Typical systems used for destroying satellites include kinetic energy weapons delivered by anti-satellites; directed energy weapons such as high energy lasers, neutral particle beams, high-powered microwave radiation, and other nuclear radiations; and broad-area electromagnetic pulses. Before the satellite can be destroyed, however, it must be detected in space, and the weapon must be aimed such that the destructive force will intercept the path of the satellite. This invention relates to a device which makes it difficult or impossible to locate and track the satellite. When the word "satellite" is used in this specification, other space based mechanisms and vehicles are considered to be within the realm of the invention.

To destroy a satellite, the weapon operator must aim his weapon either to lead the satellite such that the energy beam (or the like) and target arrive at the same location at the same time, or the weapon must be able to track the satellite's location. Should the aim of the gunner be off, in the case of an unguided projectile, the gunner will miss the target. In the case of a guided projectile, the target position, velocity and acceleration information must be accurate enough to enable the projectile to come near enough to its target to be effective. If the input data is inaccurate or too late, the operator will not be able to make the appropriate corrective actions, and the weapon will miss.

Several factors influence the accuracy of the weapon and its ability to locate its target in outer space. Some factors make tracking satellites easier, and some factors make this more difficult. For example, ground based weapons are looking into outer space, i.e. into a non-reflective background. Oftentimes space based weapons systems are also looking out into the non-reflective background of outer space. This makes the tracking of the target easier, because there is no background radiation or other noise background in the sensor's view. The satellite, which is a radiation source and a radiation reflector, is very evident in this radiation-free background. When a tracking sensor is viewing a radiation scene from the air toward the earth's surface, it is more difficult to locate and track a satellite because of all of the background radiation from the earth and/or the objects below. Thus, it is easier for ground based weapon sensors, or sensors using outer space as a background, to track satellites.

Another factor which makes it easier to track satellites is the fact that once a satellite or other space object is in orbit, they follow very precise orbital tracks.

Therefore, once a satellite's position is accurately determined and tracked, predictions of the future location of this satellite are very accurate. Some external forces, such as solar winds, do act on these satellites to alter their orbits; however, such orbital changes are typically small and gradual. Satellites are typically very limited in their maneuverability after they are in orbit. If they can be maneuvered at all, usually a very limited propulsion power supply is available, and there is no way to recharge the power supply. Hence, maneuvering is done infrequently and to a very limited extent. This makes satellites relatively easy to track. Airplanes, on the other hand, are continuously maneuverable because they have a readily available power supply. Thus, airplanes can continuously change directions to avoid ease in tracking and engagement with weapons.

There are other factors which make it more difficult to track and destroy satellites. One factor is the large distance between the ground based or space based attacker and the satellite. The attacker and target may be separated by hundreds of miles if the satellite is at relatively low altitudes, and even thousands of miles for higher altitudes. Therefore, the sensors being used must be highly directional and very powerful. Ground based sensors, in order to cover any significant area of space, must have many individual sensors which make up a large sensor device. These sensors cannot be proliferated in any way comparable to air defense sensors, and they are not easily moved. Therefore, the satellite launching party will know the location of the detecting sensors, and he will know when and where his satellite is detectable by the ground based sensor systems.

The large distance creates another problem when energy beams are employed as the weapon used for destruction. Because of this distance, in order for the energy beam to be effective when it reaches the target, extremely narrow beams must be used. The beam must reach the target with enough energy density to damage the target. This greatly complicates the aiming task, since the aiming must be very precise. Radar is not precise enough to aim the directed energy beams at great distances; very accurate closed loop laser or optical tracking systems must be used for aiming.

Another difficulty in tracking satellites results from the relative speeds of space objects. Not only are the targets difficult to locate, but they must be tracked for some significant time before the intercept is made. Low altitude objects are only in the sensor's field of view for a short time period; high altitude satellites require a long time period for the projectile to reach its target. The weapons used must have sufficient propulsion and acceleration energy to reach the location of the satellite. Any significant delay in dispatching the weapon may allow the satellite to exit the sensor's field of view before it can be tracked, or it may increase the separation distance such that the satellite is no longer within the weapon's range.

If the satellite signature or the energy required by the weapon tracking system is reduced or suppressed significantly, there may not be enough energy remaining for the weapon's tracking system to locate and track the target within the time period in which a successful attack may be launched. Reducing the available engagement time also enhances other satellite protection mechanisms, such as maneuverability, decoy deployment or other electronic counter measures.

The satellite signature is the characteristic pattern of radiation which is emitted by or reflected from the satellite. This signature enables remote based sensors to identify the object as a satellite. Various methods of reducing the signature radiation are known. For example, small dipole scatterers and absorbers have been used in camouflage shields to alter the radar signature of the satellite to make it appear like background. Other camouflage materials include special pigments which absorb radiation and re-radiate it at the proper wavelength so as to appear like chlorophyll to infrared sensors. Absorbing and non-reflecting materials have been used since World War II to reduce radar and sonar signatures on tactical aircraft and submarines, respectively. Curved surfaces and slanted configurations are also used to reduce well-defined edges at which radar (and sonar) reflection occurs. These configurations are currently used in the stealth bombers, and various other fighter and bomber aircraft.

SUMMARY OF THE INVENTION

In order for camouflage to be effective, the target must blend in with the background by incorporating similar visible, laser, radar, and infrared signatures. On earth, such backgrounds typically include woodlands, deserts, or arctic tundra. As indicated above, the typical background of a satellite is the void of outer space. Using absorbing or non-conducting materials as camouflage for a satellite would be useful for protection against radar to some extend; however, it would not offer much protection from active laser tracking systems. Nor would it be useful as visible and infrared radiation signature suppression.

It is an object of this invention to provide a satellite signature suppression shield which is effective against active and passive detection systems. Examples of active tracking systems include radar and laser tracking systems; examples of passive detection systems include infrared and visible radiation detection systems.

It is another object of this invention to provide a satellite signature suppression shield which utilizes reflective surfaces to reflect radiation away from the satellite and away from the tracking sensors.

It is a further objective of this invention to provide a satellite signature suppression shield which is movable with respect to the satellite, such that the shield may be oriented in the direction of the threat.

It is another object of this invention to provide an inflatable satellite signature suppression shield which is inflated and rigidized at a remote location.

These and other advantageous aspects of this invention may be realized by providing an airtight conical-shaped inflatable shield wherein at least one subliming material is included. The shield further includes rigidizing agents, and optionally absorbing agents and desiccant materials.

BRIEF DESCRIPTION OF THE DRAWINGS

These and other advantageous aspects of this invention will become apparent from the following detailed description taken in conjunction with the attached figures, wherein:

FIG. **1** shows the satellite signature suppression shield in accordance with the invention, fully deployed and in operation;

FIGS. *2a–2d* show the shield in various stages of inflation;

FIGS. *3a–3d* are graphs showing the effectiveness of the shield for various types of radiation;

FIGS. **4** and **5** show alternative embodiments of the invention; and

FIG. **6** is a graph showing the time required for vaporization of the reflective film by a high energy laser source.

DETAILED DESCRIPTION OF THE INVENTION

Active detection systems operate by bouncing a radiation beam off of the body to be tracked, and then detecting the reflected radiation via radiation sensors. This is the basic theory of operation behind laser, radar and sonar detection systems (sonar using sound waves). If the radiation beam is not returned to the sensors, then there is no detection of the target.

The shield of this invention, in the preferred embodiment, is conical-shaped, as shown in FIG. **1**. Incoming radiation (radar or laser) from a ground based active tracking system impinges upon the shield **10** as shown by beams **20** and **22**. The radiation beams **20** and **22** interact with the reflective coating on the shield material and are bounced harmlessly into space, as shown by reflected beams **24** and **26**. The shield thus provides protection for the satellite, shown at **12**, since the radiation is not backscattered to the sensors which are located on the earth.

The shield **10** is preferably made in the form of an inflatable balloon. The inflation process is shown in Figs. *2a–2d*. The satellite **12** is initially deployed and set in its appropriate orbit with the balloon shield enclosed behind movable panels **30**, preferably hermetically sealed panels forming a canister **28**, as shown in FIG. *2a*. The nose of the cone **32** may extrude from behind the panels **30**. After the satellite **12** is in position in space, the panels **30** are retracted as shown in FIG. *2b*, thus exposing the uninflated balloon material **34**. Any suitable mechanical retracting means may be used, such as an electrical solenoid. The movable doors **30** may be spring loaded, such that the doors are initially moved by a solenoid, and then the spring mechanism releases the doors. The entire balloon may be mounted on a spring to push it out of its holder and into the environment. The doors **30** are controlled from the earth, in the preferred embodiment; however, the movement of the doors **30** may also be controlled by an on-board timer or automatically activated in response to an on-board sensor. The satellite may be deployed in space for a long time before inflation of the shield is necessary, because of threat of attack etc. Automatic activation by a computer program is also possible. The method of triggering activation may depend upon the type of satellite being protected, or the type of attack being protected against.

In the preferred embodiment of this invention, the balloon material is a very light weight synthetic polymer film, such as Kapton (polyimides manufactured by DuPont) or Mylar (polyethylene terephthalates manufactured by DuPont), conical-shaped into a skin material, typically approximately 1 mm thick. The conical material further includes inflatable reinforcing ribs which provide initial rigidity and shape to the shield. The Kapton or Mylar skin material is coated with an extremely thin layer of radiation reflecting material. A 0.05 micron gold coating is used in the preferred embodiment. The coating and balloon skin thicknesses may be adjusted to suit the particular satellite or the type of

weapon being protected against. The particular thicknesses mentioned are merely exemplary. Adjustment of the thicknesses are deemed within the skill of the art.

The cone angle may be varied greatly, depending upon various factors, such as orbital altitude, shield weight etc. For low altitude orbits, a cone full angle of 40° may be used (half angle is 20°), assuming that the cone tip is pointing at the earth's nadir. Angles as large as 160° may be used for geosynchronous satellites. The larger the cone angle, the lower the required cone area, and consequently, the cone's weight is lowered. However, if the cone angle is made too large at low orbital altitudes, the cone face may present an orthogonal face off from which active tracking radiation may be reflected back to the earth based sensors. This orthogonal face must be avoided to effectively conceal the satellite.

At low altitudes, weapon sensors can view a satellite from an angle as low as 30° above the horizon. This means that an orthogonal face would produce a spike on the sensors if the cone half angle were 30°, or a 60° full angle. Since the satellite may rotate or oscillate in its orbit, a 40° full angle on the cone provides an extra conservative protection system. The higher the orbit altitude, the higher the cone angle may be to provide adequate protection from earth based sensors.

FIG. 2*c* shows the cone shield during the intermediate inflation stage. As mentioned above, the cone includes inflatable reinforcement ribs **36** which help provide an initial rigid shape. The cone is inflated in the preferred embodiment through the use of two subliming agents, although a single subliming agent may be used. The retractable covers **30** form the canister **28** which is preferably hermetically sealed to protect against unwanted sublimation of these materials before the cone is released from the canister **28** for deployment. When subjected to heat, such as heat from the sun in the preferred embodiment, these agents transform from a powdered solid material directly into a gaseous phase. This sublimation process may take from a few seconds to a few minutes. The first subliming agent, in the preferred embodiment, sublimes at a relatively fast rate, to provide the initial inflation and shape for the shield. It is preferred to uniformly coat the balloon with the subliming powdered material, since this provides uniform inflation. It is possible to burst the balloon if the inflation takes place too rapidly. A balance must be established between the amount of subliming powders, balloon volume, and time until rigidized, so as to properly inflate and remove all of the wrinkles without bursting the balloon skin.

During use, the satellite shield is subjected to micrometeoroid collisions which produce micropunctures in the balloon skin wall. Furthermore, some gas may diffuse through the balloon skin wall. This escaping gas may cause the shield to deflate before it could be permanently rigidized. To obviate this problem, the shield includes a second subliming agent. The second subliming agent sublimes at a slower rate than the first subliming agent, thus providing an additional gas source to make up for any gas which escapes, as described above. The pressure in the shield is thus maintained until permanent rigidization can occur. Subliming agents are chosen such that transfer to the vapor state at the temperature and pressure conditions of outer space is accomplished. One example of an appropriate subliming material is chloroacetic acid, which sublimes at 61°–63° C. Other suitable subliming agents are those used in the ECHO satellite. The subliming agents are also chosen such that the appropriate rate of sublimation is accomplished. The choice of sublimatory materials is a combination of these factors and within the skill of the art.

Heat from the satellite may also be used as the sublimation heat source, or an independent heat source may be provided in the cone.

The inside of the balloon skin is coated with a rigidizing material. In the preferred embodiment, this material is an ultraviolet curable material which coats the inside of the balloon skin. The ultraviolet curable material may be Light Weld Products 416,488 and 489, which are UV curing adhesives adapted for use with clear plastics, manufactured by Dymax Corporation of Torrington, Conn. Other suitable ultraviolet curable materials may be used without departing from the invention. The rigidizing material typically has the consistency of a slurry, like a soft glue or paste. When exposed to ultraviolet radiation, this material hardens to become permanently rigid. By "hardened" in this specification, a firm structure to provide a mirror-like surface is being referred to. The balloon has a consistency similar to that of a garbage bag. The hardening agent is necessary to provide the mirror-like surface and to avoid the presence of wrinkles or creases. Wrinkles and creases increase the signature levels and thus make the shielding less effective. It is still expected that micrometeoroids will penetrate the fully hardened balloon material, although the hardened shell may stop penetration of some meteors. One purpose of the hardening agent is to obviate the need for a pressurized gas supply, therefore, lessening the weight of the satellite and shield.

The completely hardened shield structure is shown in FIG. 2*d*. When a UV curable rigidizing material is used, a small ultraviolet radiation source **38** is also contained within the balloon at the base of the cone (shown as phantom lines in FIG. 2*d*) which is used to activate the rigidizing material. The source **38** may be a flash lamp, to get the curing process underway. Full rigidization within a few seconds to a few minutes after inflation is preferred; therefore, a material capable of rapid curing upon exposure to UV radiation is needed. .

The ultraviolet light source used in conjunction with the invention may advantageously be a Light-Welder ultraviolet lamp manufactured by the Dymax Corporation of Torrington, Conn. The ultraviolet lamp and the curable material are matched in wavelength such that the lamp emits the particular wavelength of ultraviolet light needed to cure the rigidizing material. Dymax Corporation manufactures the Light-Welder ultraviolet lamps to match in wavelength to the Light-Weld curable adhesive products described above.

The inside of the conical base of the balloon may further include an activated charcoal getter. The function of the satellite may be interfered with if the organic gases from the inflating and rigidizing elements are allowed to escape from the balloon and migrate around the satellite. These gases can escape through punctures caused by micrometeoroid collisions, as described above. The activated charcoal getter absorbs these gaseous constituents and prevents their leakage and interference with the on-board sensors of the satellite.

The balloon may also preferably include a desiccant material to absorb any water. The desiccant material in the preferred embodiment is silica gel, although any other suitable desiccant may be used. This desiccant also prevents interference with the on-board sensors. The desiccant and/or the activated charcoal is preferably located in a box at the cone base (not shown). After

inflation and hardness are completed, this box may be opened (remotely or automatically) and the charcoal and/or desiccant exposed to the balloon interior. This box prevents competition between the inflation and absorbing processes. The absorbing process is relatively slow compared to the inflation and hardening processes.

The cone is shaped so as to avoid the use of any sharp and well-defined corners. The cone base is rounded off, as shown in FIGS. **1** and **2***d*, to prevent reflections of radar currents or standing waves which result in signature spikes. The rounded off base also preferably includes absorptive material which absorbs and reduces the amplitude potential for any standing waves.

Laser and microwave radar energy is reflected into outer space by the shield, as if the cone were a mirror, as described above. Laser radiation is reflected away somewhat better than radar, because some re-radiation of radar is caused by currents created in the metal reflective coating on the skin. The main lobe of this re-radiated radiation is primarily oriented the same as the laser. This re-radiated energy is collected somewhat like an antenna and released at the tip of cone back toward earth. This creates a small signature spike or lobe from the conical tip; however, this lobe can be suppressed by rounding the tip, such that the lobe would only appear when the cone tip and the sensor were perfectly lined up.

FIGS. **3***a* and **3***b* show the reduction in optical cross section (in dB relative to a square meter, or dBsm)) as a function of the aspect angle. As shown in these figures, the laser signature is reduced by about 90 db for the shielded satellite and the radar signature is reduced by about 15–30 db.

Visible radiation detection is also suppressed by this shield. Visible radiation sensing is primarily the result of radiation reflected from the earth. This light is also reflected into outer space by the shield, with little or no light returning to a ground based sensor. Suppression of visible radiation as a function of aspect angle is shown in FIG. **3***c*. The light which is reflected back to the earth is reduced by approximately three orders of magnitude.

The reflective shield will absorb very little energy from the sun, because of its reflective surface; consequently, the infrared signature from the shield itself is reduced. Fig. **3***d* shows a reduction in the infrared signature to be approximately two orders of magnitude. While the satellite itself will absorb infrared energy from the sun, the location of the shield between the satellite and the sensor shields the sensor from infrared radiation emitted by the satellite.

Another embodiment of the invention is shown in Fig. **4**. This preferred embodiment allows the shield **10** to be mounted on a movable arm **40**, such that the shield **10** may be moved relative to the satellite **12**. In this manner, the cone can be positioned either in the direction of the velocity vector of the satellite, to protect against space-based head-on attacks; or the cone may be positioned in the direction of the reciprocal of the velocity vector, to protect against ground based attack. The conical shield must be pointed in the general direction of the threat, in order to be effective. Any suitable remote (ground based) or automatically controlled motorized device may be used to move the shield arm **40**, such as a small electric motor. The arm **40** may be moved based on commands from a remote earth based location, or the arm may automatically respond to a sensor on board the satellite which indicates an incoming threat. The shield is moved only when it is absolutely necessary, and for short time periods, when the threat of attack is imminent. Other intermediate angular orientations are considered to be within the scope of the invention. During times when the satellite is not threatened, the shield may be rotated to such a position that it does not interfere with the primary mission of the satellite. When threatened, the cone location may then be adjusted to point toward the threat, and suppress the satellite signature. The threat may typically last from 10–15 minutes, and then the cone is preferably rotated back. While in use, the cone may interfere with the primary satellite mission. This movable arm design allows the satellite to maintain a stable orbit, and it is a candidate for DMSP-like satellites.

Another alternative embodiment, shown in FIG. **5**, rotates the cone location by a propulsion means which rotates the entire satellite. This propulsion means is a low energy consuming device which uses the satellite's power supply. Such propulsion means are known. This design allows for a smaller and simpler shield design. This shield may advantageously be used for Talsat or orbital spares. Orbital spares refer to satellites which are placed into a parking orbit, but left unactivated. When satellites are built, they are typically placed into orbit when they are available, instead of waiting until they are needed. If an activated satellite becomes disabled for any reason, such as enemy attack, an orbital spare may be immediately activated to take its place.

This invention improves over prior art camouflage methods by maximizing the re-radiation away from the return path, and the sensors. Laser signatures are typically reduced 10^6 times, radar and infrared signatures are reduced 10–100 times, and visible radiation signatures are reduced 1000 times.

The inflatable skin is lightweight and allows for larger protective structures to be built. There are no beams or frames to add weight. This reduces the payload and makes this shield more attractive for use in space, where minimal weight in transport is essential. No pressurized gas bottles or piping are required, since the subliming agent is used. The rigidizing elements eliminate the need for an extra gas supply to maintain a continuous pressure in the inflated balloon. Therefore, the lifetime of the shield is increased without increasing the weight by providing a make-up gas supply.

While the shield skin is thin and lightweight, it is still durable and protecting. By acting as a mirror and reflecting radiation as opposed to absorbing energy, there is some protection against high energy laser attack, even at low altitude. Absorbing materials are more susceptible to damage due to absorption of the laser energy. When using a gold reflective coating, 98–99% of the incoming laser energy is reflected. Assuming a low altitude satellite with a 40° cone (full angle), the angle of the cone increases the area which receives the laser radiation 2.92 times, as compared to a direct orthogonal hit. The increased area of incidence reduces the flux concentration of the laser energy. Since the cone base is larger than the satellite, all the reflected radiation is bounced past the satellite into outer space. The satellite cone will have to be destroyed before the high energy laser can destroy the satellite itself.

If a high energy laser (HEL) is being used to attack the shield, the laser must irradiate the cone with an energy above 10 watts per square centimeter normal for more than two minutes continuously to damage the gold coating. Occasional short term hits will do no damage except by lasers with a much higher energy

than currently considered practical. Higher laser energy levels will do damage in less time, but the signature suppression levels are low enough, that closed loop tracking of the satellite is impractical at altitudes above 100 km. FIG. 6 shows the time required for vaporization of the metal film over the balloon skin as a function of the aspect angle. Direct irradiation with a 10 W/cm^2 laser beam was used. The dotted line in the figure represents a 10 micron gold film over a 0.5 mm Kapton skin. The solid line represents a 10 micron aluminum film over a 0.5 mm Mylar skin.

The satellite shield size and thickness depends on various factors, such as orbital altitude and the size of the satellite to be protected. Shields with a base diameter of a few feet to over 40 feet are within the scope of the invention. While quite large satellite shields are possible, the shields are still extremely lightweight and effective.

The shield is quickly deployable, within a time frame of a few seconds to several minutes. The shield may be inflated immediately after the satellite is placed in orbit or the inflation can be delayed until a crisis or hostile situation exists. The shield is permanently rigidized, so a long lifetime can be expected, and the shield can be specially tailored to the particular spacecraft and orbital situation.

While the invention has been described in conjunction with particular embodiments, various modifications may be made without departing from the invention as defined in the appended claims.

We claim:

1. An inflatable satellite signature suppression shield comprising:

(a) an inflatable balloon enclosure wherein an outer surface thereof predominantly reflects radiation, so as to reflect radiation away from any ground or air based sensor;

(b) inflation means located within said enclosure for inflating said enclosure; and

(c) hardening means located within said enclosure for rigidizing the walls of said enclosure after inflation.

2. An inflatable shield according to claim **1**, further including inflatable ribs for reinforcing the shield during inflation and prior to hardening.

3. An inflatable shield according to claim **1**, wherein said inflation means includes at least one subliming agent.

4. An inflatable shield according to claim **3**, wherein said subliming agent includes at least two subliming agents which sublime at different rates.

5. An inflatable shield according to claim **1**, wherein said hardening means includes an ultraviolet curable slurry material coated on the walls of said enclosure, and an ultraviolet radiation source located within said enclosure, wherein said slurry material hardens upon exposure to ultraviolet radiation.

6. An inflatable shield according to claim **1**, wherein said shield further includes an absorbing means comprising an activated charcoal material.

7. An inflatable shield according to claim **6**, wherein said absorbing means further includes a desiccant material.

8. An inflatable shield according to claim **1**, wherein said shield further includes an absorbing means comprising a desiccant material.

9. An inflatable shield according to claim **1**, wherein said shield is movably mounted on a satellite.

10. An inflatable shield according to claim **9**, wherein said shield is mounted on an arm which is movably attached to said satellite.

11. An inflatable shield according to claim **1**, wherein said enclosure includes a skin made from a gold coated synthetic polymer film material.

12. An inflatable shield according to claim **1**, wherein said enclosure includes a skin made from an aluminum coated synthetic polymer film material.

13. An inflatable satellite shield comprising:

(a) an essentially air-tight balloon enclosure which predominantly reflects incident radiation, so as to reflect radiation away from any ground or air based sensor;

(b) at least one subliming agent located within said enclosure for inflating said enclosure;

(c) an ultraviolet curable slurry for coating the inside of said enclosure; and

(d) an ultraviolet radiation source to cure said slurry, said source contained at least partially within said enclosure,

14. An inflatable satellite shield according to claim **13**, wherein said shield is movably mounted on a satellite.

15. An inflatable satellite shield according to claim **13**, wherein said shield is conical shaped.

16. An inflatable satellite shield according to claim **13**, wherein said balloon enclosure is stored in a hermetically sealed canister attached to said satellite prior to inflation.

17. An inflatable satellite shield according to claim **13**, wherein said shield further includes absorbing material located within said enclosure.

18. An inflatable satellite shield according to claim **17**, wherein said absorbing material includes activated charcoal and a desiccant.

19. An inflatable satellite signature suppression shield according to claim **1**, wherein said balloon enclosure is stored in a hermetically sealed canister attached to said satellite prior to inflation.

20. An inflatable satellite signature suppression shield according to claim **1**, further including absorbing means located within said enclosure.

21. An inflatable satellite signature suppression shield comprising:

(a) an inflatable balloon enclosure having a tapered outer surface, wherein said outer surface thereof predominantly reflects radiation;

(b) inflation means located within said enclosure for inflating said enclosure; and

(c) hardening means located within said enclosure for rigidizing the walls of said enclosure after inflation.

22. An inflatable satellite shield comprising:

(a) an essentially air-tight balloon enclosure having a tapered outer surface which predominantly reflects incident radiation;

(b) at least one subliming agent located within said enclosure for inflating said enclosure;

(c) an ultraviolet curable slurry for coating the inside of said enclosure; and

(d) an ultraviolet radiation source to cure said slurry, said source contained at least partially within said enclosure.

* * * * *

http://www.fas.org/spp/military/program/imint/tm_usa53.html

The Saga of USA 53 - Found, Lost, Found Again and Lost Again

Satellite sleuths will recall space shuttle mission STS 36, which deployed a secret CIA/Air Force satellite named USA 53 (90019B, 20516) on March 1, 1990. Aviation Week reported it to be a large digital imaging reconnaissance satellite. Members of an observation network which I organized, observed the satellite between the 2nd and 4th of March. It was deployed into a 62 deg inclination, 254 km altitude orbit. Early on March 3rd, it manoeuvred to a 271 km altitude.

Observers noted that the object was extremely bright, reaching a visual magnitude of -1 under favourable conditions. Its brightness was similar to that of the very large KH-9 and KH-11 imaging reconnaissance satellites.

On March 16th, the Soviet news media reported that several large pieces of debris from the satellite had been detected in orbit on March 7th, and suggested that it had exploded. In response to Western media enquiries, the Pentagon stated that "hardware elements from the successful mission of STS 36 would decay over the next six weeks". As expected, the Air Force statement was vague about the status of USA 53. The debris could have been from a break-up of the satellite, or simply incidental debris. Only five pieces of debris were ever catalogued. An intensive search by observers in late March failed to locate the satellite. Six months later, the mystery of USA 53 was solved, through the efforts of three European observers.

On October 19th, 1990, I received a message from Russell Eberst, stating that he, along with Pierre Neirinck and Daniel Karcher had found an object in a 65 deg inclination, 811 km altitude orbit, which did not match the orbit of any known payload, rocket body or piece of debris. He suspected that the object could be a secret U.S. payload, and asked me to try and identify it.

There are many secret U.S. objects in orbit, however, initial orbital elements, released in accordance with a United Nations treaty, are available for most of them. Most objects could be easily ruled out on the basis of orbital inclination. There remained three recent high inclination launches for which the U.N. had not yet received elements, and three satellites in near 65 deg inc orbits which had been tracked for a short time by observers, then lost after they manoeuvred. I found an excellent match with one of the latter, USA 53. There were no close matches with any of the other objects.

My analysis revealed that the orbital plane of the mystery object was almost exactly coplanar with USA 53 on March 7, 1990, the same date that the Soviets found debris from USA 53 in orbit! This is a strong indication that the object in question actually is USA 53, now in a new orbit. The debris may have been connected with the manoeuvres to the new orbit.

USA 53 was successfully tracked by observers until early November 1990, when it manoeuvred once more. The orbit was raised slightly on or about Nov 2nd, which is reflected in the most current elements. Bad weather prevented further observation attempts until 7 November, by which time, the object had made a much more significant manoeuvre, and could no longer be found. So far, all attempts to once again locate USA 53 have failed. The following are its last known elements:

```
USA 53          18.0  4.0  0.0  4.1
1 20516U 90019  B 90309.99079700 -.00002298  00000-0 -95528-3 0    03
2 20516  65.0200 194.0588 0009734 214.9671 144.9440 14.26241038    04
```

- Ted Molczan

Subject: **UCT 81214: Bright and stealthy**

From: **thomsona@netcom.com (Allen Thomson)**
Date: **1995/10/11**
Newsgroups: **sci.space.policy,sci.space.tech,alt.war**

A month or so ago we had a brief discussion of the feasibility and utility of stealth in LEO. At the time I opined that it might be worthwhile in tactical situations, but wouldn't be a good idea if the aim were to protect satellites from detection for long periods of time. The principal reason for this, IMO, is the very wide range of sensor types and viewing angles encountered by satellites in LEO and the fact that the stealth technologies which have been revealed to date apparently presuppose a known, fairly restricted set of "threat" sensors and engagement geometries. Thus things designed to be stealthy against one set of sensors might be detectable by other sensors the designers hadn't known about or couldn't take into account because of engineering constraints.

As it happens, a fairly concrete example of this has just come to light (so to speak). Several papers in the proceedings of the 1995 Space Surveillance Workshop* describe preliminary results of a orbital debris campaign sponsored by Space Command in late 1994. One of the interesting results concerned an object (UCT 81214) which was easily detected by a number of optical sensors but was basically invisible to radars, some of them highly sensitive range instrumentation radars, operating from 217 MHz up to ca. 35 GHz. While 81214 probably wasn't intentionally designed to have low rcs -- I'd guess it's a just a stray fiberglass panel or something of the sort -- it nonetheless illustrates the point that monostatic-radar-stealthy doesn't mean optical-stealthy (and then there's IR, bistatic radar, lidar, etc).

> "Of special interest was data collected on object 81214. Initially detected by the ETS [Lincoln Lab optical sensors at White Sands], this object has a bright optical signature but appears very small to radar sensors, and may indicate the presence of many more objects of this type...
>
> "A considerable amount of data was collected on an interesting object. Satellite 81214 appears moderately bright to optical sensors, suggesting a large physical size. However, radar tracking on this object indicates that it is quite small. Millstone data at L-Band indicates a radar cross section of approximately 0.00003 square meters, suggesting an object with a small physical size. Several highly sensitive UHF radars have been unable to track this object, however. Even the telescope sensor at Anderson Peak, CA, that is normally not involved with satellite tracking had no difficulty tracking this satellite. The existence of this object and the data that has [sic] been obtained lend credence to the theory that there is a population of optically bright objects that appear quite small to a radar. In fact, it is possible that many of the unknown objects detected by optical sensors could fall into this area."

1994 Space Debris Campaign - Preliminary Results
Taft DeVere, SenCom Corp.
Tim Payne, SWC/AE
Capt. Gary Wilson, HQ AFSPC/DOYY

"[Kwajalein Missile Range] sensors participating in the 1994 Debris Campaign included ALTAIR (VHF, UHF), TRADEX (L- and S-band), ALCOR (C-band) and MMW (Ka-band), and SuperRADOT visible band optics...

"The most interesting optical track was on object 81214, which was extremely bright to the SuperRADOTs, but was so small in radar cross section as to be untrackable by the radars at the 1756 km point of closest approach."

Kwajalein Missile Range Contribution to the 1994 Debris Campaign
A. Gerber, G. Duff, and D. Izatt
MIT Lincoln Laboratory, Kwajalein Missile Range

*Proceedings of the 1995 Space Surveillance Workshop
28-30 March 1995
Lincoln Laboratory
Massachusetts Institute of Technology
Lexington, Massachusetts
K.P. Schwan, Editor
Project Report STK-235, Vol.1
(ESC-TR-95-022)

From: Ted Molczan
Date: Sun, Jan 4 2004 6:37 am
Email: "Ted Molczan" <molc...@hotmail.com>
Groups: sci.astro.satellites.visual-observe

[deletia]

I am fairly certain that the only country to have launched a stealth satellite was the U.S.A.

AFP-731, aka USA 53, aka 90019B (its code name was Misty, but we did not know that until years later), was shuttle-deployed in March 1990 into a low 62 deg orbit (the highest-ever inclination shuttle mission). I organized a network of observers in the far north to visually track it. Here are the pre and post-flight reports that I posted to the USENET

http://www.google.ca/groups?&selm=1990Feb13.055830.13572%40gpu.utcs.u...

http://www.google.ca/groups?&selm=1990Mar13.174844.15580%40gpu.utcs.u...

This was its approximate orbit soon after deployment, based on our hobbyist tracking:

```
USA 53 (Misty)  18.0  4.0  0.0  1.5 v
1 20516U          90060.43932272  .00320000          48444-3 0    49
2 20516  61.9930 174.9679 0008996 262.5429 126.3620 16.04000000   178
```

Its brightness was indicative of very large satellite. At the time, we thought it was an advanced version of the KH-11 type satellite.

A week after it was deployed, Russia reported that it had vanished, leaving behind only debris. Speculation was that it had exploded. We searched for it in vain, so we began to doubt that it was still in orbit.

In October 1990, Russell Eberst, Daniel Karcher and Pierre Neirinck found it in a 65 deg, 800 km orbit:

```
1 20516U 90019B   90299.82375579  .00000277  00000-0  11483-3 0    07
2 20516  65.0194 222.4319 0016320 301.3908  58.5348 14.26287908    00
```

I identified it by showing that its orbit had been coplanar with AFP-731's on the date that the Russians reported to have seen only debris. Soon after, in early Nov 1990, it disappeared again.

Ten years later, I discovered that Russell Eberst observed it as a faint unknown three times during 1996-97. It had manoeuvred to a 66.1 deg, 736 km orbit. Here is an accurate orbit derived from Russell's obs:

```
1 20516U 90019B   97284.23458324  .00000027  00000-0  70436-5 0    01
2 20516  66.1631  65.2852 0005248 187.8717 231.2307 14.48751217    03
```

The original orbit's ground track repeated almost exactly every nine days; the new orbit repeated almost exactly every 3 days, which also preserved the original 9 day repetition, since it is a multiple of 3. This shorter period of repetition was more in line with the KH-11 (about 4 says) and Lacrosse (about 2 days), which combined with the timing of the manoeuvre (Nov 1990) suggests that the orbit had been changed to make it more useful in support of Desert Shield, and Desert Storm. An aging KH-11 manoeuvred in the same month, for apparently the same reason, so this fit a pattern.

Notice that the new orbit was 75 km lower than the old (required to attain the 3 day repetition), and its inclination was nearly 1.2 deg greater. Additional analysis suggests that the higher inclination was to compensate for the lower altitude, to preserve the ability to image as far north as 76 N, which is well to the north of the ground track. That latitude just includes the strategically important southern island of Russia's Novaya Zemyla arctic islands.

It has since leaked out, and is now generally accepted that Misty was the first U.S. LEO stealth satellite. It is believed that hobbyists were able to see it easily until early Nov 1990 because its optical stealth mechanism was active only when in sight of Russian optical tracking stations. It had been assumed that there were no other "detection threats" elsewhere in the world. I guess the designers could not imagine that it would attract the attention of non-experts, who would see it as just as one of hundreds of fairly bright satellites.

Since its manoeuvre to the 736 km orbit took place within days of the hobbyist's tracking having been made public, it is reasonable to guess that the optical stealth mechanism was activated against the hobbyist's known locations. That would explain why the otherwise bright object was not seen for years, and was faint during Russell's chance sightings in 1996-97.

Thorough searches by Greg Roberts in 2001 and 2002 failed to turn up the object. Most likely because it had exceeded its useful life and been de-orbited.

Ted Molczan

http://www.fas.org/spp/military/docops/usaf/vistas/vistas.htm

[EXCERPTS]

New World Vistas
Air and Space Power
for the 21st Century

Summary Volume

This report is a forecast of a potential future for the Air Force.
This forecast does not necessarily imply future officially sanctioned programs, planning or policy.

Dr. Gene H. McCall
Chair, USAF Scientific Advisory Board
Study Director, *New World Vistas*

John A. Corder
Major General, USAF (Ret)
Deputy Study Director

15 December 1995

6.3 Space Control

Control of space will become essential during the next decade. We will depend on satellites to provide Global Awareness and Dynamic Control for our Forces, and commercial services may be a threat to those Forces. As commercial involvement of US companies in space increases, the United States may be called upon to protect nonmilitary space assets from attack by terrorists or a rogue nation. We should be prepared to execute three missions:[41]

- Protect US military space assets and launch capabilities.
- Deny the use of threat assets.
- Protect allied, non military space assets.

[deletia]

Protection of military satellites might be enhanced to some extent should the application of stealth techniques be possible, but if distributed systems become the norm, the redundancy of systems will provide protection. Solar panel area is large, and panel position cannot always be set to minimize observability. Even if possible, we do not believe that the increased cost of low observable satellites will be justifiable.

Smaller Spy Satellites May Give U.S. Stealth Capability Over Trouble Spots

The Washington Post, February 01, 1998, FINAL Edition

By: Walter Pincus, Washington Post Staff Writer

Section: A SECTION, p. A09

A new generation of small intelligence satellites, planned to be launched beginning in 2003, is expected to give U.S. analysts almost constant overhead images of specific trouble spots anywhere in the world, according to administration and congressional sources.

Some of the new vehicles may be equipped with stealth technology so they cannot be tracked by radar, several sources said. But other sources doubt a way has been found to prevent detection of the satellites, a feat the CIA and Pentagon have been trying to accomplish since the 1960s.

Keith Hall, director of the National Reconnaissance Office (NRO) which buys and flies the satellites, would not discuss stealth capability in satellites.

Other sources on Capitol Hill and within the intelligence community said the existence of the technology in satellites is one of the closest-held secrets in government.

Report Urges Use of Stealth, Deployment Alternatives to Protect U.S. Satellites
by Barbara Opall-Rome
Space News, Sept 7-13, 1998
p. 14
[EXCERPT]

US war planners should reduce the vulnerability of space-based assets through development of stealthier, hardened satellites, new methods of deployment and alternative technologies, according to a new Pentagon report.

"Strategic Assessment 1998: Engaging Power for Peace," published by the U.S. National Defense University's Institute for National Strategic Studies, details myriad ways in which U.S. satellites are vulnerable to attack and warns of dire consequences if U.S. space capabilities are jeopardized.

Nuclear Threat
Letters
Space News, Oct. 5-11, 1998, p.14

I would like to comment on the article urging protective measures for U.S. satellites ["Report Urges Use of Stealth, Deployment Alternatives to Protect U.S. Satellites," Sept. 7-13, page 41]. I was surprised to see no mention of a nuclear weapon detonated at high altitude, over 100 kilometers, which would have a devastating effect on hundreds of low-Earth-orbit (LEO) satellites.

A high-altitude nuclear detonation releases a tremendous number of high-energy electrons. These electrons, trapped in Earth's magnetosphere, rapidly populate all LEO orbital space. As a result, hundreds of LEO satellites are exposed to electron levels up to 10,000 times higher than the natural LEO space environment. This enhanced electron radiation damages critical electronic circuits in satellites, leading to the demise of LEO constellations in weeks or a few months.

Furthermore, most of the protection solutions mentioned in the report detailed in the article would be ineffective against this threat. On-orbit spares would suffer the same fate as the primary satellites, while launching replacement satellites also would be ineffective since the enhanced radiation levels can persist for several months to a year.

This ultimate anti-satellite weapon also is extremely low-tech. All that is required is a small nuclear weapon and a launch vehicle with a timer. Because the effect is global, no fancy guidance system and no homing sensors are required. No satellite needs to be directly attacked since the damaging electrons rapidly move out from the point of explosion. This leads to another attractive feature of this nuclear approach: deniability.

An aggressor country could launch an attack near its own territory and claim it was only doing a test and had no knowledge or intent to harm satellites. Sanctions could be imposed on the country, but it is unlikely that a direct military response would be aimed at it since the high-altitude explosion killed no one and no cities were destroyed.

The primary means of defeating this threat is to make sure that satellites [are equipped with] a combination of shielding and radiation-hardened electronics. Such an approach, if implemented in the beginning of a satellite program, would only add a small percentage to development costs.

Remember the problems caused when Galaxy 4 failed earlier this year? Imagine if hundreds of satellites failed in the timespan of a few weeks and replacements could not be launched for a year. It would be a nightmare.

Glenn Kweder
Space systems analyst
Logicon RDA
Alexandria, VA

From: Allen Thomson
Date: Mon, Jul 29 2002 3:13 pm
Email: thoms...@flash.net (Allen Thomson)
Groups: sci.space.policy

Strange are the ways of fate and synchonicity.

Back on 2002-05-10, it was noted that,

> The one possibly new thing is USA 144 (Norad 25744, 1999-028A),
> which popular guessing has to be an 8X/EIS broad-area/long-dwell
> imager.

> But there's starting to be a problem with understanding USA 144,
> because there's just one of it, and a reasonable constellation
> of synoptic imagers would have at least three satellites. One
> would have expected at least one companion to have been launched
> since 1999, but none has -- and it will be next year at the
> earliest that one could be. So it's starting to seem that either
> USA 144 is a Something Else, or that it's one of the troubled
> satellites Mr. Thompson alluded to.

Well, not a week after that was posted, a voice from the ether made me aware of some extensive orbital analyses of USA 144 that pretty well prove (several hundred TLEs spanning its entire time in orbit were used) that it's Something Else and/or Something Really Weird.

To wit, its response to atmospheric drag and SRP indicate that it has a very, very low ballistic coefficient. Put that together with the physical area indicated by its visual brightness, and there's a real Missing Mass problem. I.e., 90% of the T4 payload mass seems to be someplace else.

Alternatively, USA 144 might have a huge surface area, 90% of which doesn't contribute to its brightness. But nobody can think of why such a large area would be needed at that altitude, nor how it would go undetected throughout all the observations that have been made.

Finally, its light curve indicates that it's rotating at a little over one revolution every two minutes. Again it's hard to square that with an imaging payload, though I guess you could concoct a story.

[deletia]

From: Ted Molczan
Date: Wed, Apr 2 2003 11:20 am
Email: "Ted Molczan" <molc...@hotmail.com>
Groups: sci.space.policy

[deletia]

USA 144 Satellite

Launched from VAFB in May 1999 aboard a Titan IVB with no upper stage, USA 144 probably has an IMINT mission, but its orbit is a mystery. My fellow hobbyists and I continue to track an object from that launch in a 2700 km x 3100 km, 63.4 deg orbit, but detailed orbital analysis reveals significant Solar Radiation Pressure perturbations, from which I have deduced an area to mass ratio of about 0.1 m^2/kg, 10 to 20 times that of a payload, and more akin to debris. It appears to be no more than 5 to 10 m across, and only a few hundred kilograms in mass.

I now suspect that the real USA 144 may be the second U.S. LEO stealth IMINT satellite. The first one was Misty (aka USA 53 and AFP-731), shuttle-deployed in 1990. If USA 144 is Misty-2, then it is likely to be in a 700 to 800 km, quasi 65 deg orbit. The orbits are low-drag, so orbit maintenance manoeuvres are not required.

Misty-1 remained in orbit for at least 7.5 years, so if USA 144 is Misty-2, then it may have at least a few more years of useful life.

[deletia]

Ted Molczan

US006962310B1

(12) **United States Patent**
Bigelow

(10) **Patent No.: US 6,962,310 B1**
(45) **Date of Patent: Nov. 8, 2005**

(54) **INFLATABLE SATELLITE BUS**

(75) Inventor: **Robert T. Bigelow**, Las Vegas, NV (US)

(73) Assignee: **Bigelow Aerospace**, North Las Vegas, NV (US)

(*) Notice: Subject to any disclaimer, the term of this patent is extended or adjusted under 35 U.S.C. 154(b) by 0 days.

(21) Appl. No.: **10/981,195**

(22) Filed: **Nov. 4, 2004**

(51) **Int. Cl.**[7] **B64G 1/00**
(52) **U.S. Cl.** ..... **244/158 R**
(58) **Field of Search** ..... 244/158 R, 164, 244/172

(56) **References Cited**

U.S. PATENT DOCUMENTS

4,394,780 A * 7/1983 Mooradian 398/125
5,345,238 A * 9/1994 Eldridge et al. 342/3
5,641,135 A * 6/1997 Stuart et al. 244/173
6,107,952 A * 8/2000 Barker et al. 342/13
6,231,010 B1 5/2001 Schneider et al.
6,373,449 B1 * 4/2002 Bokulic et al. 343/915
6,536,712 B1 * 3/2003 Barenett ..... 244/158 R
6,547,189 B1 4/2003 Raboin et al.
6,568,640 B1 * 5/2003 Barnett 244/173
6,585,193 B1 * 7/2003 Kustas et al. 244/169
6,647,668 B1 * 11/2003 Cohee et al. 52/1

* cited by examiner

Primary Examiner—J. Woodrow Eldred
(74) *Attorney, Agent, or Firm*—Franklin E. Gibbs

(57) **ABSTRACT**

An inflatable satellite bus is claimed for use with a mission payload. The inflatable satellite bus is comprised of a core adapted to receive a mission payload. There is an expandable shell attached to the core and substantially enclosing the core. The core has an attitude control device and a power system attached to the core and operated by a controller.

17 Claims, 2 Drawing Sheets

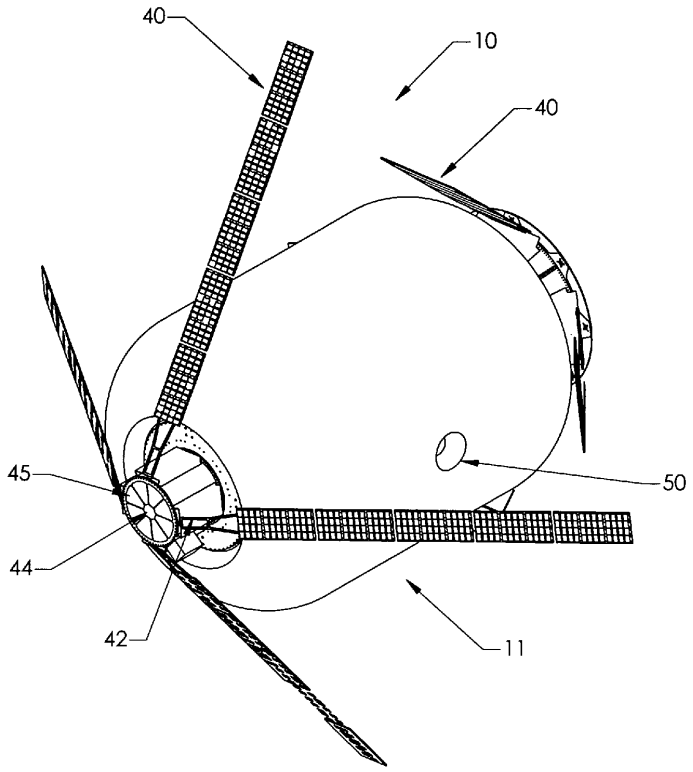

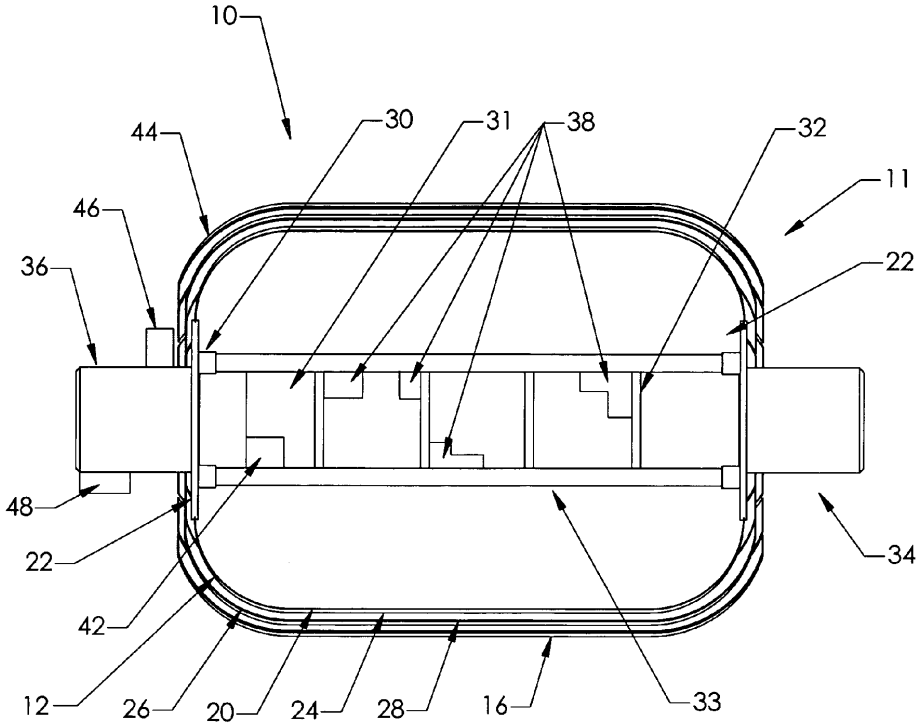

Fig. 1

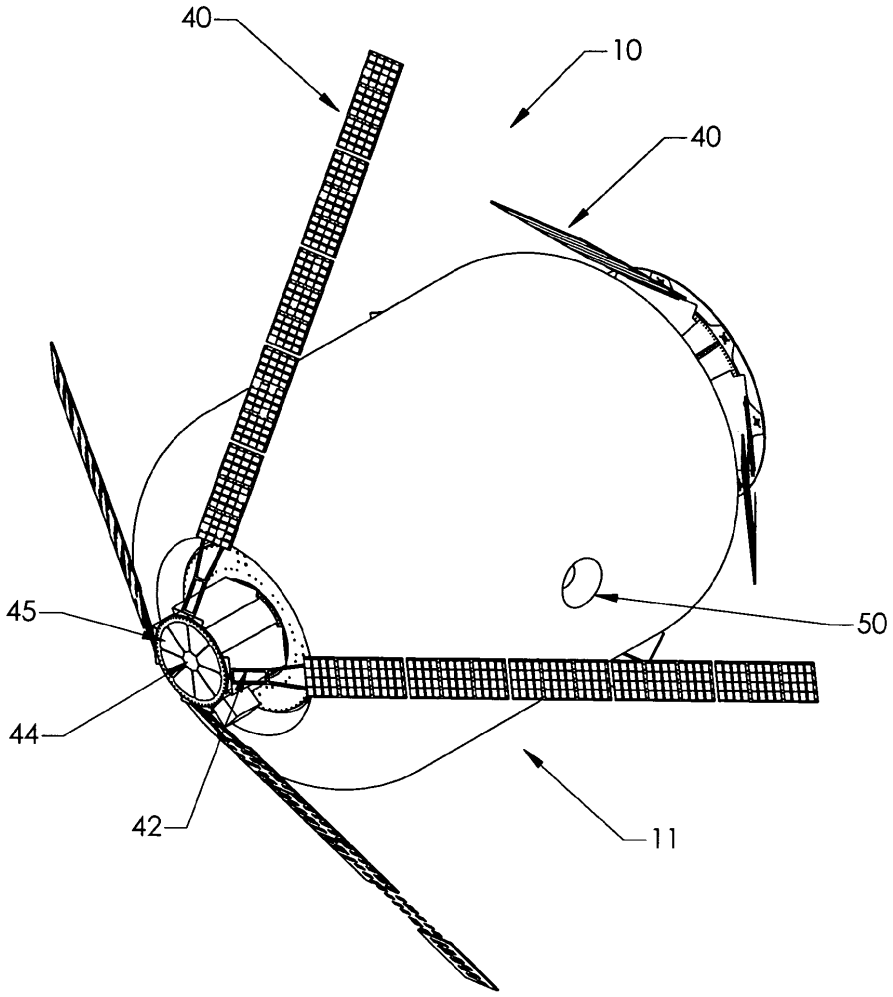

Fig. 2

INFLATABLE SATELLITE BUS

BACKGROUND OF THE INVENTION

1. Field of the Invention

This invention relates to an inflatable satellite bus for use with mission payloads.

2. Description of the Prior Art

Many satellites are composed of two main elements; the payload and the bus. The payload contained the equipment that was mission specific to the satellite's intended purpose. The bus provided support functions common to most satellites such as attitude control, power, and telemetry.

The separation of functions common to most satellites into a bus allowed for the development of a standard base to support a variety of satellites. One advantage to a standard bus is that the bus affords a known footprint for the satellite payload. While such an approach supports a standard that satellite manufactures may rely upon in preparing a payload, the footprint becomes a limiting factor in the design of satellites.

What is needed is a satellite bus that provides a more flexible base for the payload. While inflatable craft are known in the human habitat arena as evidenced by U.S. Pat. No. 6,231,010 to Schneider et al and U.S. Pat. No. 6,547,189 to Raboin et al, the present invention addresses the application of the principles of inflatable structures to operate as a bus for satellites.

SUMMARY OF THE INVENTION

The inflatable satellite bus is comprised of a core and an inflatable shell attached to the core. The core has an internal volume that is adapted to receive payloads including mission specific payloads. There is also an attitude control device coupled to the core, a power source coupled to the core, and a controller connected to the power source and the attitude control device. The controller directs the attitude control device. The inflatable satellite bus may also have a communications device for receiving commands from a ground station to facilitate operating the controller.

BRIEF DESCRIPTION OF THE DRAWINGS

FIG. **1** is a cross-sectional side view of an inflated satellite bus; and

FIG. **2** is a side view of an inflated bus.

DETAILED DESCRIPTION OF THE DRAWINGS

The present invention may best be understood by reference to the following description taken in conjunction with the accompanying drawings. FIG. **1** is a cross-sectional side view of an inflated satellite bus **10**. The bus is not restricted to a particular size, or shape, as evidenced by the bus in FIG. **1** being large enough to house individuals. This size bus can be used as a platform for a number of satellite missions or as a master satellite to control the operation of other satellites. Illustrated in this figure is the inflatable shell **11**. The shell **11** is flexible and there are several variations on the shell including, for example, a variety of flexible meteor shields. In the preferred embodiment, the shell **11** is comprised of an air bladder **12**, a meteor shield **14**, and a restraint layer **16**. Such configurations are known in the art.

The air bladder **12** is a substantially non-permeable material that prevents the gas inside the craft from escaping into space. In the preferred embodiment the air bladder **12** material is Cepac® HD-200. A restraint layer **20** is attached to the bulkheads **22** and the restraint layer **20** substantially transfers the load from the air bladder **12** to the bulkheads **22**. In the preferred embodiment, the bulkheads **22** are composed of metal such as aluminum. In the preferred embodiment, the restraint layer **20** is comprised of straps made from Kevlar strands and the restraint layer **20** and the air bladder **12** are connected to the bulkheads.

In the preferred embodiment, the meteor shield **24** is comprised of layers of impacting material **26** such as Nextel separated by layers of spacing material **28**. The spacing material **28** in the preferred embodiment is an open celled space rated foam that can be compressed prior to launch and then expands upon deployment. The number of layers can be determined by know techniques depending upon variables such as mission parameters and survivability requirements.

A set of longerons **30** and cross members **32** connect the opposing bulkheads **22**. The longerons **30** can be made from a variety of materials depending upon the mission characteristics. In the preferred embodiment, the longerons **30** are substantially comprised of a composite material. In an alternate embodiment, the longerons **30** can be composed of a metallic material. The volume enclosed by the longerons **30** is referred to as the internal volume **31**. An airlock **34** allows for access by individuals such as maintenance personnel. A distal end **36** can house an attitude control device, communications equipment, a power source, and a controller that is powered by the power source and operates the attitude control device. The longerons **30** and bulkheads **22** form the core **33** of the craft **10**.

Equipment **38** is attached to the longerons **30** and cross members **32**. The equipment **34** can be mission specific equipment such as communications equipment roughly correlating to what may be found on conventional communications satellites. In this instance, the equipment **34** would be referred to as a mission payload. Other mission specific equipment configurations can include radar mapping and weather type equipment, although mission specific equipment is not limited such configurations. The equipment **34** may also be multi-purpose equipment such as repeaters to facilitate communications with one or more other satellites.

While this figure illustrates the equipment **34** being housed within the internal volume **31**, other equipment, such as antennas, may be placed external to the craft **10**. In such a configuration, the equipment **34** is substantially housed within the internal volume **31**.

A thermal control system **42** is present to regulate the temperature of the craft **10**. A variety of thermal control systems **42** are well known in the art and the specific system can be chosen according to the mission payload characteristics.

The external surface of the craft **44** can also support equipment **46** external to the craft.

A communications device **48** can be used to relay information and instruction to and from a ground station and the craft **10**. The communications device **48** can also be used to facilitate communications between other satellites and spacecraft.

Referring now to FIG. **2**, the inflated craft **10** is smaller than FIG. **1**, and does not have air lock to facilitate humans performing maintenance on the craft. In the preferred embodiment, solar cells **40** form part of the power source **42**. However, the power source **42** may also be fuel cells, a nuclear source, or other such power generating devices. The power source **42** can be used not only by the bus, but may also be relied upon by the mission specific equipment.

An attitude control device **44** is relied upon to assist in keeping the craft **10** in proper alignment with the earth. Such devices are well known in the art. Typically, such a device relies upon nozzles and propellants to direct a force for correcting the attitude. Furthermore, a controller **45** directs the operation of the attitude control device **44**. Controllers are also well known in the art.

Similar to the craft **10** of FIG. **1**, the craft **10** in FIG. **2** can also have a thermal control system, equipment disposed on the external surface, a communications device for communicating with a ground station or other satellites, and equipment substantially within the internal volume of the craft.

The shell **11** can have radar stealth capabilities. This could include using radar absorbing materials and/or geometries that reflect radar waves at angles that make detection of the craft **10** difficult. Many such materials and geometries are well known in the field of aircraft development and manufacture.

The shell **11** may also have desirable radio or microwave characteristics that may allow radio or microwaves to pass through the shell **11** without substantial attenuation. This could allow the mission payloads to transmit and receive information through the shell. In this situation, there would not be any visible way to determine the type of equipment housed in the craft **10**.

The shell **11** may also contain a window **50**. The window **50** would allow viewing from within the craft **10**. This is useful where the equipment inside the craft **10** has optical capabilities such as a camera.

The shell **11** may also be colored as to make visual detection more difficult.

While FIG. **2** does not provide for human access, other embodiments would allow human access. These embodiments do not require an internal volume that would support human habitation, but rather enough volume to allow a person to perform maintenance within the craft. In this fashion, a mission payload could be modified, replaced, or updated by a human maintenance person.

There has thus been described a novel inflatable satellite bus. It is important to note that many configurations can be constructed from the ideas presented. Thus, nothing in the specification should be construed to limit the scope of the claims.

What is claimed is:

1. An inflatable satellite bus comprising:

a core, the core having an internal volume, and the core adapted to receive a mission payload substantially within the internal volume;

an inflatable shell attached to the core and substantially enclosing the core;

an attitude control device coupled to the core;

a power source coupled to the core; and

a controller coupled to the attitude control device and the power source such that the controller operates the attitude control device.

2. The inflatable satellite bus of claim **1** further comprising a thermal control system.

3. The inflatable satellite bus of claim **1** wherein the satellite bus further comprises an external surface and elements of the mission payload being disposed on the external surface.

4. The inflatable satellite bus of claim **1** further including a communications device for receiving instructions from a ground station.

5. The inflatable satellite bus of claim **1** further including a communications device for transmitting data to a ground station.

6. The inflatable satellite bus of claim **1** wherein the inflatable shell is substantially stealth.

7. An inflatable satellite bus comprising:

a core;

an inflatable shell attached to the core, the inflatable shell substantially enclosing the core and the inflatable shell having an external surface;

a mission payload disposed substantially on the external surface of the inflatable shell;

an attitude control device coupled to the core;

a power source coupled to the core; and

a controller coupled to the attitude control device and the power source such that the controller operates the attitude control device.

8. The inflatable satellite bus of claim **7** further comprising a thermal control system.

9. The inflatable satellite bus of claim **7** wherein the satellite bus further comprises an internal volume to the core and elements of the mission payload being disposed within the internal volume.

10. The inflatable satellite bus of claim **7** further including a communications device for receiving instructions from a ground station.

11. The inflatable satellite bus of claim **7** further including a communications device for transmitting data to a ground station.

12. The inflatable satellite bus of claim **7** wherein the inflatable shell is substantially stealthy.

13. An inflatable satellite bus comprising:

a core, the core having an internal volume, and the core adapted to receive a payload substantially within the internal volume;

an inflatable shell attached to the core and substantially enclosing the core;

an attitude control device coupled to the core;

a power source coupled to the core; and

a controller coupled to the attitude control device and the power source such that the controller operates the attitude control device.

14. The inflatable satellite bus of claim **13** further including a communications device for transmitting commands to other satellites.

15. The inflatable satellite bus of claim **13** further including a communications device for receiving data from other satellites.

16. The inflatable satellite bus of claim **13** further including a communications device for communicating with a ground station.

17. The inflatable satellite bus of claim **13** wherein the satellite bus further comprises an external surface and elements of the payload being disposed on the external surface.

* * * * *

http://www.washingtonpost.com/wp-dyn/articles/A56171-2004Dec10.html

New Spy Satellite Debated On Hill

Some Question Price and Need

By Dana Priest

Washington Post Staff Writer

Saturday, December 11, 2004; Page A01

The United States is building a new generation of spy satellites designed to orbit undetected, in a highly classified program that has provoked opposition in closed congressional sessions where lawmakers have questioned its necessity and rapidly escalating price, according to U.S. officials.

The previously undisclosed effort has almost doubled in projected cost -- from $5 billion to nearly $9.5 billion, officials said. The National Reconnaissance Office, which manages spy satellite programs, has already spent hundreds of millions of dollars on the program, officials said.

The stealth satellite, which would probably become the largest single-item expenditure in the $40 billion intelligence budget, is to be launched in the next five years and is meant to replace an existing stealth satellite, according to officials. Non-stealth satellites can be tracked and their orbits can be predicted, allowing countries to attempt to hide weapons or troop movements on the ground when they are overhead.

Opponents of the new program, however, argue that the satellite is no longer a good match against today's adversaries: terrorists seeking small quantities of illicit weapons, or countries such as North Korea and Iran, which are believed to have placed their nuclear weapons programs underground and inside buildings specifically to avoid detection from spy satellites and aircraft.

The National Reconnaissance Office and the CIA declined to comment. Lockheed Martin Corp., which sources said is the lead contractor on the project, issued a statement saying, "As a matter of policy we do not discuss what we may or may not be doing in regards to classified programs."

The satellite in question would be the third and final version in a series of spacecraft funded under a classified program once known as Misty, officials said.

Concerned about the latest satellite's relevancy and escalating costs, the Senate Select Committee on Intelligence has twice tried to kill it, according to knowledgeable officials. The program has been strongly supported, however, by Senate and House appropriations committees; by the House intelligence committee, which was chaired by Rep. Porter J. Goss (R-Fla.) until he recently became CIA director; and by his predecessor, George J. Tenet.

"With the amount of money we're talking about here, you could build a whole new CIA," said one official, who, like others, talked about the program and the debate on the condition of anonymity because of the project's sensitivity.

The debate over the secret program has been carried out in closed session on Capitol Hill, and no legislator has publicly acknowledged the existence of the program. Echoes of the heated discussion, however, have begun to emerge in public.

Earlier this week, four Democratic senators refused to sign the "conference sheets" used by the House-Senate conference committee working on the 2005 intelligence authorization bill. Sources said that was meant to protest inclusion once again of the satellite program.

A statement by conference managers said only that four Democratic senators -- John D. Rockefeller IV (W.Va.), vice chairman of the intelligence committee; Carl M. Levin (Mich.); Richard J. Durbin (Ill.); and Ron Wyden (Ore.) -- objected to a classified item in the bill "that they believe is unnecessary and the cost of which they believe is unjustified." It continued: "They believe that the funds for this item should be expended on other intelligence programs that will make a surer and greater contribution to national security." Some Republican lawmakers have concerns about the program as well, as do some senators on the Armed Services Committee, sources said.

In an attempt to verbalize frustration while abiding by classification constraints, Rockefeller made an unusual reference to his protest on the Senate floor.

"My decision to take this somewhat unprecedented action is based solely on my strenuous objection -- shared by many in our committee -- to a particular major funding acquisition program that I believe is totally unjustified and very wasteful and dangerous to national security," Rockefeller said. "Because of the highly classified nature of the programs contained in the national intelligence budget, I cannot talk about them on the floor."

Rockefeller added that the committee has voted "to terminate the program" for the past two years, "only to be overruled" by the appropriations committees.

A small firestorm followed, with at least one radio talk show host and callers to Rockefeller's office charging that he had divulged classified information. On Thursday, spokeswoman Wendi Morigi issued what she called a clarification. "Any assertion about classified intelligence programs based on Senator Rockefeller's statement is wholly speculative," the statement said. It said Rockefeller's floor statement had been "fully vetted and approved by security officials."

That statement illustrates the constraints faced by members of Congress as they work to adjust or terminate even multibillion-dollar programs that are hidden from public scrutiny and debate. There have been other hints of problems in satellite programs in the last year.

Several months ago, Sen. Dianne Feinstein (D-Calif.), a member of the intelligence committee, made a cryptic reference to the value of expensive satellite programs during testimony on her intelligence reform proposal.

"I can't go into this, but when we look at satellites, one or the other of us has questions," she told her colleagues. "I'm concerned these are tens-of-billions-of-dollar items and we sure as heck better know what we're doing."

Stealth technology has been used to cloak military aircraft such as the F-117A fighter and the B-2 bomber.

When radar searches for a stealth craft, it records a signature that is much smaller than its size should indicate. Thus a stealth plane or satellite could appear to radar analysts as airborne debris.

Advanced nations routinely patrol the skies with radar and other equipment to detect spy planes, satellites and other sensors.

About 95 percent of spycraft are detected by other nations, experts say. But "even France and Russia would have a hard time figuring out what they were tracking" if they were to pick up the image of a stealth satellite, said John Pike of GlobalSecurity.org, an expert on space imagery.

The idea behind a stealth satellite is "so the evildoers wouldn't know we are looking at them," Pike said. "It's just a fundamental principle of operational security that you know when the other guy's satellites are going to be overhead and you plan accordingly."

But, Pike said, "the cover and deception going on today is more systematic and continual. It's not the 'duck and cover' of the Soviet era."

The existence of the maiden stealth satellite launched under the Misty program was first reported by Jeffrey T. Richelson in his 2001 book "The Wizards of Langley: Inside the CIA's Directorate of Science and Technology." Richelson said that first craft was launched from the space shuttle Atlantis on March 1, 1990.

Amateur space trackers in England and Canada were able to detect it at points after that, Richelson reported.

A second Misty satellite was launched nearly a decade later and is in operation, sources said.

Circumstantial evidence of that satellite's existence was outlined in the April issue of a Russian space magazine, Novosti Kosmonavtiki. According to a translation for The Washington Post, the article suggested that a satellite launched from Vandenberg Air Force Base in California in 1999 may be the second-generation Misty craft and noted that the satellite was put into orbit along with "a large number of debris," a likely deception method.

Researcher Julie Tate contributed to this report.

New Spy Plan Said to Involve Satellite System
By DOUGLAS JEHL
The New York Times
December 12, 2004

Correction Appended

WASHINGTON, Dec. 11 - A highly classified intelligence program that the Senate Intelligence Committee has tried unsuccessfully to kill is a new $9.5 billion spy satellite system that could take photographs only in daylight hours and in clear weather, current and former government officials say.

The cost of the system, now the single biggest item in the intelligence budget, and doubts about its usefulness have spurred a secret Congressional battle. The fight over the future of a system whose existence has not yet been officially disclosed first came to light this week.

In public remarks, senators opposed to the program have described it only as an enormously expensive classified intelligence acquisition program without specifically describing it as a satellite system.

Outside experts said on Thursday that it was almost certainly a new spy satellite program that would duplicate existing reconnaissance capabilities. The Washington Post first reported the total cost and precise nature of the program on Saturday, saying that it was for a new generation of spy satellites being built by the National Reconnaissance Office that are designed to orbit undetected.

The officials would not say how many satellites were planned as part of the program, but they said the system included the satellites themselves, their launchers and the technology necessary to transmit the images they collected.

Some current and former government officials expressed concern that the disclosure of the existence of the highly classified program might be harmful to national security. They said Congressional Republicans were questioning whether the public hints first dropped by four Senate Democrats opposed to the program, including John D. Rockefeller IV of West Virginia, might have represented a violation of Congressional rules. Mr. Rockefeller's office said earlier in the week that the senator had consulted with security officials before making a carefully worded statement on the Senate floor that described the classified program as unnecessary and too expensive, but did not identify it further.

But other officials said the depth and intensity of opposition to the program, expressed behind closed doors for more than two years by Senate Republicans as well as Democrats, had finally tipped the balance between secrecy and candor in a way that has led to an extraordinary disclosure.

Among the champions of the program, officials said, has been Porter J. Goss, the new director of central intelligence, who served until this summer as the Republican chairman of the House Intelligence Committee. But critics, including Democrats and Republicans on the Senate Intelligence Committee, have questioned whether any new satellite system could really evade detection by American adversaries and whether its capabilities would improve on those already in existence or in development.

"These satellites would be irrelevant to current threats, and this money could be much better spent on the kind of human intelligence needed to penetrate closed regimes and terrorist networks," said a former government official with direct knowledge of the program. "There are already so many satellites in orbit that our adversaries already assume that just about anything done in plain sight is watched, so it's hard to believe a new satellite, even a stealthy one, could make much of a difference."

A Central Intelligence Agency spokesman declined to comment about the existence of any classified satellite program, as did the White House. A spokeswoman for Mr. Rockefeller, who is the top Democrat on the Senate Intelligence Committee, also declined comment. A compromise between the Senate and House that was approved in both chambers this week authorized spending on the program for another year. Money for the program had earlier been allocated as part of a defense appropriations bill that reflected strong support for the system among members of the House and Senate Appropriations Committees.

But Mr. Rockefeller and other Democrats on the Senate intelligence panel, including Senator Ron Wyden of Oregon, said in calling attention to the issue this week that they would seek much more aggressively to scuttle the program next year.

The idea that the disputed program might be a stealth satellite program was proposed in an interview on Thursday by John Pike, a satellite expert who heads Globalsecurity.org, a defense and intelligence database. The existence of the first stealth satellite, launched under a program known as Misty, was first reported by Jeffrey T. Richelson in his 2001 book, "The Wizards of Langley: Inside the C.I.A.'s Directorate of Science and Technology." Mr. Richelson said the first such satellite was launched from the space shuttle Atlantis in March 1990.

A second Misty satellite is believed to have been launched in the late 1990's and is still in operation, current and government officials said.

The program now in dispute would represent the third generation of the stealth satellite program, and is being built primarily by the Lockheed Martin Corporation, the officials said. The company has refused to comment on its involvement in any classified programs.

To date, the cost of the program has been in the neighborhood of hundreds of millions of dollars a year, the officials said. But they said that the overall price tag had recently soared, from initial estimates of about $5 billion to the new $9.5 billion figure, and that annual outlays would increase sharply in coming years if the program is kept alive.

"Right now, it's not too late to stop this program, before billions of dollars are spent on something that may never get off the ground and may add nothing to our security," the former government official said.

In his public comments, Mr. Wyden did not mention Lockheed, but he expressed concern about the rapidly escalating cost of the satellite program and the way in which the contractor was selected.

The mere existence of the National Reconnaissance Office was not publicly acknowledged until the early 1990's, and it remains the most secretive among American intelligence agencies. Its main responsibility is building and launching spy satellites to collect images and intercept communications for the National Geospatial-Intelligence Agency and the National Security Agency.

There are many kinds of reconnaissance satellites, and some of them have the capability, through infrared and radar technology, to acquire images at night and in cloudy weather. Officials have suggested that new technologies may also be able to detect the presence of objects underground. The sharpest images come from photo reconnaissance, but those satellites can generally operate successfully only during the day and in sunny weather.

Officials critical of the new stealth satellite program now in dispute said it would have only photo reconnaissance capability, though with high resolution. The secret nuclear programs in North Korea and Iran are widely believed to be developed underground or otherwise out of view of photo reconnaissance satellites.

"These days, you really have to assume that if there's anything we see in North Korea, it's something they intend for us to see," said Mr. Pike, the private satellite expert.

For the Record - Dec. 13, 2004

A front-page article yesterday about an intelligence program that has been the subject of a secret Congressional battle misstated the name of a database operated by John Pike, who first suggested publicly that the program involved a spy satellite system. The database is Globalsecurity.org, not Globalsecurity.com.

http://www.space.com/businesstechnology/technology/mystery_monday_050103.html

Anatomy of a Spy Satellite

By Leonard David
Senior Space Writer
posted: 03 January 2005
06:45 am ET

For military and intelligence communities, outer space has become a highground,hide-and-seek arena -- a kind of "now you see me, now you don't" espionage playing field.

Over the decades, spying from space has always earned super-secret status. They are the black projects, fulfilling dark tasks and often bankrolled by blank check.

However last month, several U.S. senators openly blew the whistle on a mystery spy satellite program, critical of its high cost while calling to question its utility in today's post-9/11 world.

One lawmaker, Jay D. Rockefeller (D-WV), the vice chairman of the Senate intelligence committee, openly criticized the program on the floor of the U.S. Senate. He said the program "is totally unjustified and very wasteful and dangerous to national security," adding that he has voted to terminate the program for two years, with no success.

There is now a delicate dance underway between issues of national security and open public scrutiny about taxpayer dollars being spent wisely or squandered. Meanwhile, the swirl of secrecy seems to be revolving around a top secret "stealthy" satellite project, codenamed MISTY.

Play MISTY for me

First, there's a little unclassified history.

The U.S. stealth satellite program at issue was first spotlighted publicly by Jeffrey Richelson, a senior fellow of the National Security Archive in Washington, D.C.

The Archive is gathering declassified U.S. documents obtained through the Freedom of Information Act. In doing so, the Archive declares they have become the world's largest non-governmental library of declassified documents.

The MISTY effort was broached in Richelson's first-rate book on the Central Intelligence Agency (CIA), The Wizards of Langley: Inside the CIA's Directorate of Science and Technology, published in 2002 by Westview Press in Boulder, Colorado.

Richelson described the launching of the stealth imaging satellite via space shuttle Atlantis in 1990. He noted that MISTY's objective was to lessen the threat to U.S. satellites from the Soviet Union -- a nation whose anti-satellite program was of "significant concern" to U.S. military space officials during the early 1980s, he wrote.

But within weeks after MISTY's shuttle deployment, both U.S. and Soviet sources reported that the satellite malfunctioned. Richelson explained that a spacecraft

explosion "may have been a tactic to deceive those monitoring the satellite or may have been the result of the jettisoning of operational debris."

Whatever the case -- and to the chagrin of spysat operators -- a network of civilian space sleuths had been monitoring a set of MISTY maneuvers and the explosion, ostensibly part of a "disappearing act" meant to disguise its true whereabouts.

Suppression shield

Richelson has posted on the Internet declassified documents he has obtained that track the historical roots of the still active stealth satellite work, dating as far back as 1963.

One document is U.S. Patent 5,345,238, issued to Teledyne Industries of Los Angeles, California in 1994. It details a movable "satellite signature suppression shield" -- a bit of clever technology that can suppress the laser, radar, visible, and infrared signatures of a satellite. The invention makes spotting or tracking a satellite a tough-to-do proposition.

The camouflage space shield, as reviewed in the patent, takes on the form of an inflatable balloon. It can be quickly deployed and made rigid upon exposure to both outside and internally-created ultraviolet radiation. This shield can be tailored to a particular spacecraft and orbital situation. Once deployed, the cone-shaped balloon is oriented to deflect incoming laser and microwave radar energy, sending it off into outer space.

While an intriguing bit of high-tech handiwork, whether or not this stealthy idea is an active ingredient of the MISTY satellite series is not publicly known.

World changes

"We don’t know exactly what technology was used for the first couple of MISTYs to try to ensure stealth," Richelson told SPACE.com, "so we don’t know what’s being proposed for this generation…what difference there is, if any."

Richelson said that new systems and new technologies could experience difficulties that can add up to more dollars. "The question is whether you think it’s worth it to persevere…spending the extra money to get something worthwhile."

The world has changed considerably since the MISTY program was first initiated, Richelson added. So too have changes in denial and deception practices, perhaps calling to question buying additional stealth satellites, he said, contrasted to purchasing more conventional spy satellites.

Maybe you can attain the basic objectives in terms of uncovering what various countries are up to with other systems, and possibly for less cash, Richelson suggested.

"But again, that’s something that has to be assessed based on experience," Richelson said. "People should be able to make some assessment on a classified

basis, at least as to what we're getting from this type of system that we wouldn't get from the more conventional systems, and whether that's worth the money."

Bureaucratic stealth

According to a SPACE.com source and an analyst familiar with American satellite reconnaissance, there are several kinds of stealth at work, not just in space, but on the ground too: bureaucratic stealth and operational stealth.

"The United States started to use bureaucratic stealth when it first began the Corona reconnaissance program in the late 1950s. The very existence of the project was a secret and for several years the U.S. Air Force told the public that it was simply testing engineering equipment, not launching actual reconnaissance satellites," the source, who did not wish to be identified, noted.

"Another form of bureaucratic stealth is to use a cover story, such as telling the world that you are launching a simple scientific satellite when in reality the satellite contains intelligence equipment."

Starting around 1960, the CIA and the U.S. Air Force both began to look at ways of achieving operational stealth -- that is, actually hiding the satellites themselves.

Cold war sneak peeks

A number of ideas were fostered decades ago in U.S. military and intelligence circles centered on snagging cold war-class sneak peeks at an enemy using satellites.

"Because Soviet satellite tracking systems were so primitive, they thought that the best way to achieve this was to perform a covert satellite launch. They considered various options, from launching the satellite from a submarine to carrying the rocket underneath or inside an aircraft like a C-130 and launching it over the ocean," the source noted.

But these plans never went very far for a number of reasons.

"For starters, they could not put a powerful enough camera inside a rocket small enough to be carried by an airplane. In addition, for a good part of the 1960s, the people looking at satellite photographs found no indications that the Soviets were actually trying to hide their activities," the source explained.

"If the Russians had realized just how much American satellites could see, they would have taken more care to hide from them. For instance, the CIA was able to determine how strong Soviet intercontinental ballistic missile silos were because they could watch them under construction and determine the thickness of their walls."

Zirconic security compartment

It appears that the first attempt to hide a satellite from radar and optical sensors occurred in the mid-1970s with an experimental military satellite. But it was not until the 1980s that this effort was dramatically increased.

The Reagan administration poured a huge amount of money into satellite reconnaissance, including a stealth satellite program. They created a special security compartment called "Zirconic" that was extremely secret.

"Only someone who had a ‘Zirconic clearance’ was allowed to know about the existence of the stealth satellite program. The specific technology was given the code name ‘Nebula’", the analyst said.

The National Reconnaissance Office (NRO) initiated a number of stealth satellite programs during the 1980s. The NRO manages the nation’s spy satellite programs. The most notable of these was dubbed MISTY, a non-acronym but apparently a photoreconnaissance satellite for snapping pictures.

"It was designed to be invisible to radar and optical tracking from the ground, but its photos were not as good as the big, non-stealthy reconnaissance satellites, like the Keyhole 11 and its successors. MISTY was launched from the space shuttle in 1990 in an unconventional way…it was rolled out over the side," the source recounted.

Another stealthy satellite was launched in 1999 atop a Titan 4 rocket launched from California. Once again the amateur satellite trackers followed it, although after awhile they began to suspect that they were actually following a decoy and that the satellite itself was in a different orbit.

Billion dollar bills as fuel

It appears that American stealth satellites take on the look of a kind of ‘magic bullet’ within the intelligence arsenal. They are not as versatile as regular intelligence satellites.

"So the stealth satellite is used to take pictures when the adversary thinks that there are no satellites overhead. Presumably there are only a few instances where this is useful -- after all, lots of activities and objects cannot be hidden," the source said. "And the technology is apparently extremely expensive."

And that breathtaking price tag has helped spur the current controversy into the open -- whether or not oodles of money should be spent to achieve what some experts consider very little result.

"It is also probably true that the recent spate of military space cost overruns has made everybody wary," the analyst continued. Among those climbing in price tag are the Space Based Infrared Satellite Systems project (SBIRS), the Advanced Extremely High Frequency communications satellite, along with a new class of reconnaissance satellites, both optical and radar, called the Future Imagery Architecture.

"So the military space people have burned up all their credibility on Capitol Hill, using billion dollar bills as fuel," the source concluded.

Policy choices

The current flap over MISTY "stems more from the Bush administration's obsession with secrecy and oppressing dissent regarding its programmatic, budgetary, policy choices," said Theresa Hitchens, Vice President of the Center for Defense Information in Washington, D.C.

"They do this by trying to intimidate those willing to speak out in public than about the satellite itself," she said.

Are there are any lessons to be learned from the issue?

If there are, Hitchens added, "it is that space programs are expensive, and it is important to carefully weigh the benefits of any program versus the costs…as well as against alternatives for accomplishing the same mission."

Enormous boondoggles

"I think this episode suggests that secrecy is sometimes used not to protect national security, but to line someone's pockets," said Steven Aftergood, a senior research analyst at the Federation of American Scientists (FAS) in Washington, D.C. He directs the FAS Project on Government Secrecy which works to reduce the scope of government secrecy, to accelerate the declassification of cold war documents, and to promote reform of official secrecy practices.

"Even though the Senate Intelligence Committee has twice concluded that the program is not justified on the merits, it remains fully funded," Aftergood told SPACE.com.

The reason why, Aftergood explained, is because congressional appropriators are free to spend the money without being held accountable for their actions.

"There is a certain inequity built into the multi-billion dollar intelligence appropriations process. Industry lobbyists holding security clearances are free to advocate for their preferred programs. But critics or skeptics are not even permitted to know what is at issue. So it is not surprising that there will be enormous boondoggles from time to time," Aftergood said.

But given the "outing" of MISTY into the public forum, has national security been compromised?

"I doubt it," Aftergood responded. "Other than its extravagant cost, very little concrete new information about the program has entered the public domain."

If there is a policy lesson to be derived from all of this, Aftergood concluded, "I think it is that the integrity of the intelligence oversight process has to be strengthened. Among other things, that means reducing unnecessary budget secrecy, and curtailing industry advocacy on classified programs."

http://www.c4isrjournal.com/story.php?F=2034471

Stealth satellites
Cold War myth or operational reality?
By John Croft
C4ISR
October 04, 2006

A patent recently issued to an upstart space entrepreneur could be another sign that stealth satellites are real — not vestiges of the previous millennium's battles.

In late 2004, right about the time that some U.S. lawmakers publicly unveiled a previously classified $9.5 billion program to build satellites that orbit the Earth undetected from the ground, Robert Bigelow, hotel entrepreneur and founder of Bigelow Aerospace, submitted a patent application for a satellite that proposed to do just that.

Bigelow's patent, filed in November 2004 and approved a year later, follows a dozen or so previously filed inventions back to the early 1960s. Each outlined methods that could reduce or eliminate the optical and radar signatures that could be used to track, identify and determine the orbital parameters of a satellite from the ground.

If the essentials of an orbit are obtained — potentially by low-cost, easily obtainable methods and equipment — an opponent can either hide above-ground activities during the reconnaissance satellite's pass or possibly target the space vehicle with anti-satellite weapons. By all indications, the U.S. has launched and operated at least two such satellites in the post-Cold War era for photo reconnaissance or signal intelligence, one in 1990 and the other in 1999.

Bigelow's invention, called an inflatable satellite bus, appears to be identical in construction to the company's Genesis I spacecraft, which was launched July 12 by an ISC Kosmotras Dnepr rocket into a 550-kilometer near-circular orbit with 64-degree inclination.

The patent reveals that the shell, or outer surface of the inflatable portion of the vehicle, "can have radar stealth capabilities. This could include using radar absorbing materials and/or geometrics to reflect radar waves at angles that make detection of the craft difficult." The patent goes on to say that shell could be "colored as to make visual detection more difficult."

A former CIA analyst, Allen Thomson, included the patent in his latest Stealth Satellite Sourcebook, a document hosted on the Web site of the Federation of American Scientists. "I guess the main substantive reason I [included the patent] is that it shows the idea of satellite stealth is still in the air and is being used as a selling point," he said in an e-mail response to questions from C4ISR Journal.

Given the secretive nature of stealth programs — the Defense Advanced Research Projects Agency, Boeing, Lockheed Martin, Bigelow Aerospace and other satellite builders did not comment for this article — the methods used to hide a satellite from view have to be inferred from patents issued, expert opinions and the observations of a worldwide network of satellite tracking hobbyists.

In the U.S., the primary means to achieve stealth for aircraft have included using faceted surfaces (F-117A), compound curves (B-1) and planform alignment (F-22), or symmetry of components.

For satellites, the proposed methods have been similar but include additional options, such as dispensing decoys. Although the Defense Department is said to have experimented with stealth satellite designs in the 1970s, the first stealth satellite openly discussed in the media was deployed by the space shuttle Atlantis as part of STS-36 in February 1990. That information came largely from a 2001 book by Jeffrey T. Richelson called "The Wizards of Langley: Inside the CIA's Directorate of Science and Technology."

Known as Misty 1 (officially known as AFP-731 or USA 53), the satellite is thought to have been a digital imaging reconnaissance satellite weighing about 37,000 pounds and using the analog of faceted surfaces as its cloaking mechanism. That means an incoming radar beam would have been deflected back in a different direction, similar to a billiard ball's path when grazing the bumper. The same would have been true of incoming light, either directly from the sun or reflected from the Earth, masking the satellite to optical tracking systems on the ground.

A patent application by workers at Teledyne Industries at about the same time detailed how such a design could work, at least in theory. The cloaking mechanism was a large inflatable cone coated with "radiation reflective material" deployed on a rotating arm on the body of the main satellite. The device could be moved into position to cloak the satellite when needed, then moved out of the way to allow the instruments to see targets on the ground. "The purpose of the invention is to suppress the laser, radar, visible and infrared signatures of satellites to make it difficult or impossible for hostile enemy forces to damage or destroy satellites in orbit," the applicants wrote.

Another patent in Thomson's sourcebook, filed in 1971 by TRW, uses anti-radar screens that project out from the main satellite body and its appendages to either totally deny the detection of the satellite by ground-based radars or change its appearance so that the radar cannot distinguish it from nearby decoys.

Declassified memos from the 1960s in Thomson's sourcebook detail how the U.S. military was considering cross-section reduction techniques, decoys, shielding and other countermeasures, such as hiding among existing satellites. The CIA's key reconnaissance satellite at the time was code-named Corona. Operated between 1959 and 1972, the space vehicles carried high-resolution cameras and would drop film canisters for midair recovery by Air Force aircraft.

Concerns about satellite survivability increased in the 1980s because of fear of Russian anti-satellite capabilities. The mind-set continued despite the fall of the Berlin Wall in 1989 with the development of Misty 1 and Misty 2, also known as USA 144, a follow-up satellite launched by a Titan IVB booster out of Vandenberg Air Force Base, Calif., in 1997. Both highly classified missions were unveiled to some extent by the amateur satellite tracking community.

Ted Molczan, a Canadian technologist by education and top satellite tracker by hobby, organized a worldwide team in 1990 to track the mysterious payload deployed by the shuttle, and sightings were made. About a week after deployment, however, reports from Russia indicated that five or six objects were being tracked. The assumption was that the satellite had exploded or been deliberately destroyed by the U.S.

Misty 1 appeared to be a closed book until November 1990, when hobbyists in Scotland and France observed an unknown satellite in a similar inclination as Misty 1 but at a much higher altitude.

Molczan's computations showed that there was a good chance the mystery vehicle was Misty 1, meaning the orbital debris the Russians had tracked may have been decoys or debris purposefully generated to hide the intentions of the true satellite.

About a week after news articles announced what the hobbyists had seen, Misty 1 disappeared again, Molczan said.

As with Misty 1, shortly after Misty 2's launch, nine pieces of debris were catalogued by the Air Force at or above the satellite's initial orbit, Molczan said. Hobbyists tracked various objects, some for several years, but doubted that the primary satellite was among them. "No one has seen what might be the Misty 2 payload," Molczan said.

Aside from keeping hobbyists guessing, the need for stealth satellites remains the topic of much debate. Democratic lawmakers in the U.S. Senate's Select Committee on Intelligence have denounced the multibillion-dollar classified intelligence acquisition program widely thought to be the follow-on to the Misty series and have voted several years running to cut its funds. In each case, Congress has kept the program going through the appropriations process.

Critics argue that enough satellites are already orbiting, stealthy or not, that potential adversaries have moved critical defense-related projects underground.

Thomson is of the opinion that stealth, as one ingredient in a reconnaissance system's survivability, may be overdone.

"Stealth, properly used, might be one technique to increase survivability," he wrote in an e-mail.

"Stealth for survivability enhancement is different from stealth to defeat adversarial denial and deception (D&D), which I think is mostly a waste of time these days. Alas, counter-D&D seems to be what the intelligence community is fixated on."

Appendix A

Large Object
Visibility Measurements

A PRIMER

OF

SELECTED VISIBILITY MEASUREMENT ISSUES

FOR

LARGE OBJECTS

July 1986

CONTENTS

Section		Page
1.	INTRODUCTION	1
2.	VISIBILITY AND MEASUREMENT EQUIVALENCY	2
	2.1 Lambert Surface	2
	2.2 Specular Reflector	5
	2.3 Complicated Surfaces	6
	2.4 The Measurement of Scattering Properties	8
	2.5 Error Estimates as a Function of Spot Size	13
3.	MEASUREMENT FACILITY ISSUES -- SCANNING VERSUS FLOOD ILLUMINATION TECHNIQUES	16
	3.1 Assumptions Made	16
	3.2 Requirements	17
	3.3 Measurement Techniques -- Examples to Scope Selected Problems	17
	3.4 Requirements Compliance	24
	3.5 Summary	26
4.	SUMMARY AND OUTSTANDING TECHNICAL ISSUES	28
	4.1 Summary	28
	4.2 Example, Specific Technical Issues Outstanding	28

I. INTRODUCTION

This short note summarizes several issues related to making detailed optical measurements of large-scale objects. The issues involved are set within the context of selected assumptions and constraints developed to scope a very large and complex technical area. In the following section, the equivalency between the visibility of an object and selected measurement protocols is discussed. An evaluation of different approaches to developing a large scale measurement facility is provided in Section 3 to provide an intuitive feel for the differences between scanning and flood illumination. A summary of issues outstanding is presented in Section 4.

1. This note focuses uniquely on issues associated with developing a large-scale, ground-based, indoor measurement facility. Other approaches, e.g. outdoor ranges, table-top, small scale laboratory ranges, or in-situ space and field-testing approaches are excluded;

2. The analysis assumes a specific viewing geometry;

3. Only measurements of visible optical signatures have been addressed herein. No consideration has been given to thermal or infrared signatures or other signatures outside the visible frequency band;

4. This analysis was done to scope the range of problems that relate to measurements that validate an optical signature requirement. As such, this work does not address the precise optical requirement to be validated not the correctness or relevance of such a requirement. It is intended to identify problems that should be addressed in the future; finally,

5. This note does not address important issues related to an operational detectability assessment.

Figure 1. Issues to be Addressed

2. VISIBILITY AND MEASUREMENT EQUIVALENCY

Suppose we have a surface being illuminated by sunlight and we wish to know its brightness (image irradiance) for imaging purposes. The usual approach is to assume that the surface is a Lambert reflector. This means that its brightness is constant for any viewing angle. Clouds and white bond paper are common examples of surfaces that closely approximate Lambert surfaces across the visible spectrum. We will first review this case and then examine the situation where brightness varies as a function of both the illumination and observation angles. In addition to specular, (i.e., mirror-like), many surfaces exhibit such directional reflectance properties. For example, a full moon is seven times brighter than a half moon because the lunar surface scatters preferentially in the direction of the incident light.

2.1 LAMBERT SURFACE

The simplest geometry is that shown in Figure 2. The target consists of a flat surface that is illuminated at some angle of incidence, θ_i, as shown.

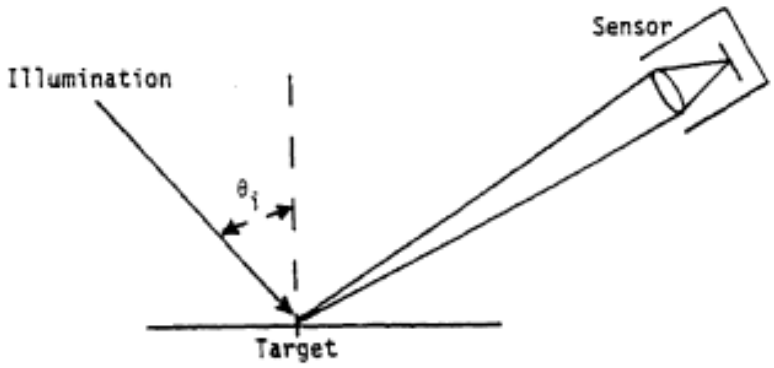

Figure 2. Illumination and Viewing Geometry.

The first thing to note is that the irradiance (the number of watts per unit area incident on the surface) depends on the illumination angle. If the solar constant is E_s, then the actual irradiance is $E_s \cos\theta_i$. Thus, the irradiance peaks at about "noon" and then continually diminishes until the sun sets. (For complicated shapes, θ_i varies over the surface so that irradiance is also complicated.)

An alternative way is to think about this in terms of the total power (radiant flux), Φ, incident on the surface. This can be expressed as

$$\Phi = E_s A_p ,$$

where A_p is the projected area of the surface as viewed from the direction of the incident radiation. If the area has a specific shape (square, for instance), then the projected area depends on the orientation of the surface as well as the angle of the incident radiation. Thus, two angles are involved in determining the total incident power.

For a Lambert surface with a reflectance , , the radiance, L, (watts per unit area per steradian) is obtained by dividing the irradiance by π. Thus

$$L = \rho E_s \cos {}_i / \pi .$$

If we assume that an imaging sensor utilizes a solid-state area detector to image the target, then the relevant area depends on the projected dimension of a pixel as shown in Figure 3. If R is the distance to the object and F the focal length of the collection lens, then the projected area of the pixel, A, is

$$\Delta A = d'^2/\cos\theta_v = (Rd)^2/(F^2\cos\theta_v) \quad .$$

where $d' = \frac{R}{F} d$

θ_v = zenith angle

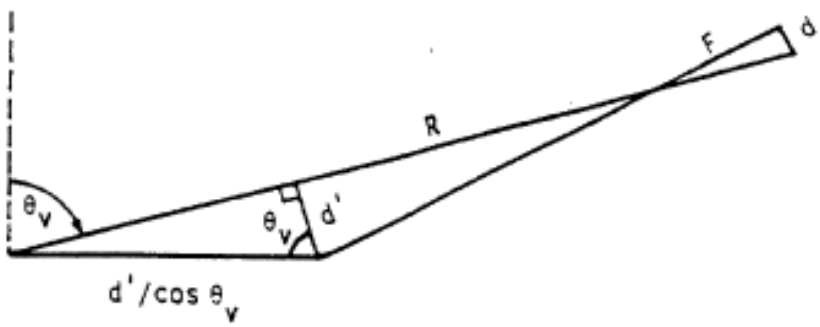

Figure 3. Projected Pixel Geometry.

The number of watts collected by the lens is obtained by multiplying the radiance by the projected area and the solid angle subtended by the lens. The solid angle defined by the lens, $\Delta\omega$, can be written

$$\Delta\omega = \pi D^2/4R^2 \quad ,$$

where D is the lens diameter. The watts collected by the lens, Φ_c, can therefore be expressed as

$$\Phi_c = L\,\Delta A\,\Delta\omega$$

$$= \rho \frac{E_s d^2 \cos\theta_i}{4\,(F/D)^2 \cos\theta_v} \quad ,$$

where the ratio F/D is called the F-number of the lens. Note that as long as the target is larger than the projected pixel area, the number of watts collected is independent of range.

If the target is smaller than the projected area, then the collected power will decrease with range. In this case, it is more convenient to work with the radiant intensity, I, of the target. For a Lambert surface with reflectance, ρ, I is Φ divided by the solid angle, π. The power collected by, Φ_c, will then be

$$\Phi_c = I\Delta\omega = \frac{\rho E_s A_p D^2}{4R^2} .$$

Thus, larger lenses are required to collect some minimum power as the distance increases. This is the reason large telescopes are needed to see distant stars.

2.2 SPECULAR REFLECTOR

Now suppose we have a flat plate that is not a Lambert surface and is specifically a specular reflector. By definition, nearly all the incident energy will be reflected at an angle equal to the angle of incidence (see Figure 4).

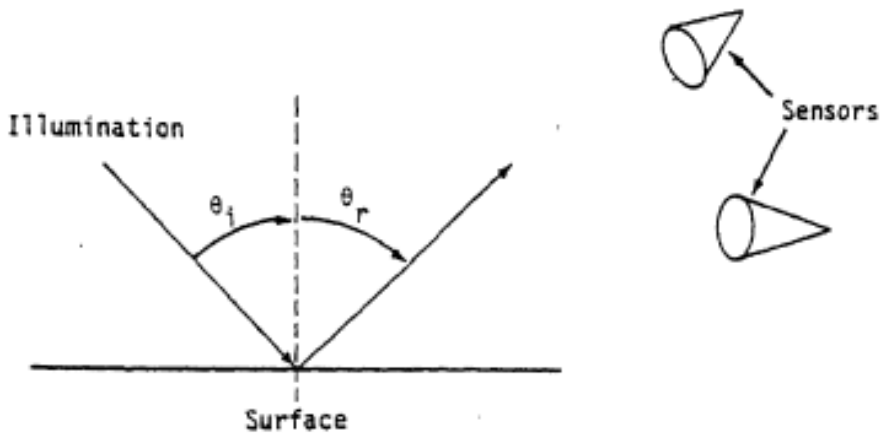

Figure 4. Illumination and Viewing Geometry

If a sensor is looking in the direction of the reflected energy, the plate will appear very bright. Sensors looking in other directions, however, will see only some minute fraction of the reflected energy. If the plate is uniformly irradiated and is uniform and isotropic, then the fraction of the radiation that is reflected in a particular direction is called the bidirectional reflectance-distribution function (BRDF). Its value is a function of the radiation wavelength as well as two angles of incidence and two angles of reflectance. The BRDF itself is a ratio of infinitesimals and therefore is never measured directly. Instead, measurements are averaged because of the spread in the incident and reflected angles. The BRDF is useful for characterizing the reflectance properties of a simple surface such as a mirror, but misleading and not useful for complicated surfaces.

2.3 COMPLICATED SURFACES

If surfaces are not simple, then it can be quite difficult to characterize the "scattering" properties of the surface. For example, suppose we have a complicated arrangement of surfaces such as that shown in Figure 5.

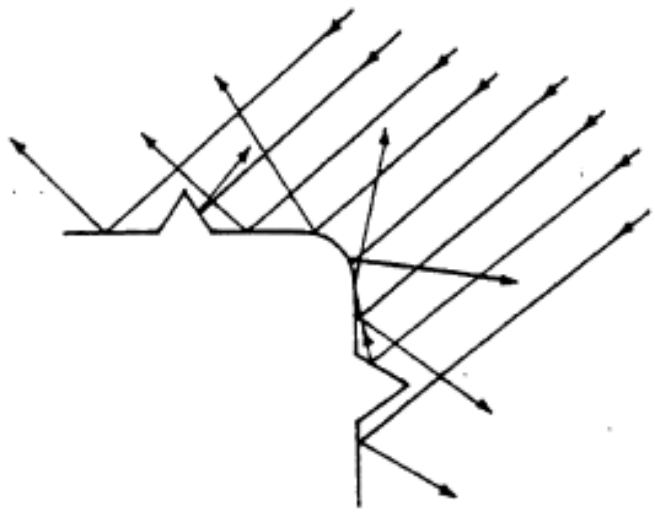

Figure 5. Irradiation of a Complicated Specular Surface.

Because the radiation strikes each surface at a different angle, the irradiance of each surface is different. Thus, even if all the surfaces were Lambertian, their radiant intensities would vary in a complicated way. For specular surfaces, the situation is much worse because the BRDFs (or their equivalents) do not vary in a known way. Moreover, some surfaces may be irradiated by secondary reflections from one or more other surfaces.

Because the dimensions of the surfaces could be quite small and there could be numerous surfaces in a small area (1 cm^2, for instance), trying to estimate scattering in a particular direction from the BRDF property of each surface would be hopeless. The complicated surface will, of course, still have directional scattering properties--but they should not be called BRDFs. There are some questions, however, on how to measure these properties, and, more importantly, how to synthesize them.

2.4 THE MEASUREMENT OF SCATTERING PROPERTIES

If we wish to estimate the directional scattering properties of a surface or combination of surfaces from laboratory measurements, there are several considerations. First, there are serious questions concerning the characteristics of laboratory illumination versus the real stuff. Lack of uniformity in beam intensity could lead to significant measurement errors. Variations in power as a function of wavelength will also have an effect. Even actual sunlight will be altered by the earth's atmosphere and will therefore vary during the day. Solar simulators differ from sunlight in spectral power as well as angular spread. Some light sources are polarized and this significantly affects reflectance measurements.

Assuming we can compensate for these potential illumination errors, there is, however, perhaps a more fundamental issue. How does one utilize measurements from a relatively small area to characterize the properties of a larger surface or combination of surfaces? If the surface is flat and uniform (i.e., a measurement for one portion of the surface is statistically valid for the remainder of the surface), the answer is straightforward. The scattering is proportional to the projected area of the surface, A_p, divided by the cross-sectional area of the test beam, A_s. Of course, it must also be modified to account for variations from a "true" solar spectrum. Thus the estimated radiant intensity, I, in a particular direction could be written

$$I = K_m(A_p/A_s)I_m(\theta_i, \phi_i, \theta_v, \phi_v) \quad ,$$

where K_m accounts for variations with the solar spectrum (and varies with wavelength), and $I_m(\theta_i,\phi_i,\theta_v,\phi_v)$ is the measured intensity for a set of illumination and viewing angles. In practice, the "measured" values would probably be extrapolated from a relatively small set of measurements at selected illumination and viewing angles. The measurements would also probably be normalized to compensate for variations in illumination source power. For a simple, flat surface, these normalized intensity measurements are equivalent to BRDF measurements.

Suppose, however, that a surface is curved like a cylinder or sphere. The illumination and viewing angles will vary over the test area because they are measured with respect to surface normals. The smaller the test area, the less the variation, but the required number of measurements is increased. Because it is not feasible to make measurements for all possible combinations of angles, extrapolations would be mandatory. Increasing the size of the test area reduces the extrapolation requirements, but, even when the entire surface is illuminated, extrapolations are required for the viewing angles.

If a surface is curved but not complex, then we could estimate total intensity from the surface somewhat similarly to a flat surface. For instance, a series of test measurements on a cylindrical surface could be treated as a series of N "flat" surface measurements. The total intensity, I, would then be

$$I = K_m \sum_{j=1}^{N} \left(\frac{A_{pj}}{A_s}\right) I_{mj}\left(\theta_i,\phi_i,\theta_v,\phi_v\right),$$

where A_{pj} are the projected areas of the surface in the direction of the incident beam and I_{mj} are the corresponding measurements for the associated test areas in the direction θ_v, ϕ_v. This is certainly not precise because there will be gaps or overfills of the test areas. Also, the normalized measurements, I_{mj}, are, in general, not equivalent to BRDFs because there is no <u>one</u> normal to a curved surface and therefore no single set of associated angles. Again, the larger the test areas, the better the estimates should be because there are fewer problems with gaps and overfills (see Figure 6).

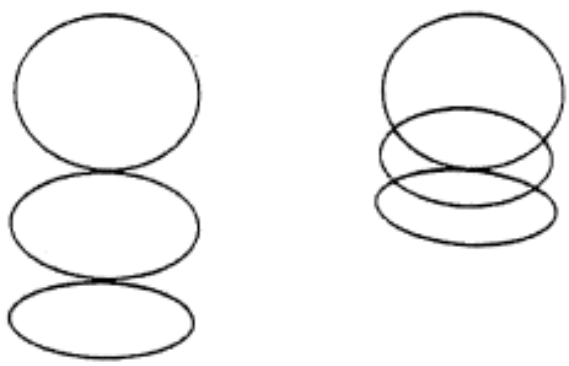

Figure 6. Test Area Gaps and Overfills for a Curved Surface

For complex objects, there are potential problems with secondary reflections as well as the possibility that extrapolations are less accurate because variations in angular intensity are more pronounced. For example, assume that a single defect, or feature, is the predominant scatterer in a

test area. Angular intensity measurements, I_m, will depend on the location and orientation of the defect as shown in Figure 7. If the beam intensity is not uniform, it will also affect the measurements. Because of these effects, it is probably necessary to scan completely all complex areas. Scanning gaps would permit potentially important scattering sources to be missed. On the other hand, overscannning not only takes time, but there are questions concerning the equivalency of such measurements to that of a fully illuminated area. If we recognize the possibility of secondary reflections, analysis and synthesis become even more complicated. Again, these potential problems are ameliorated as the size of the test area (scan spot) is increased.

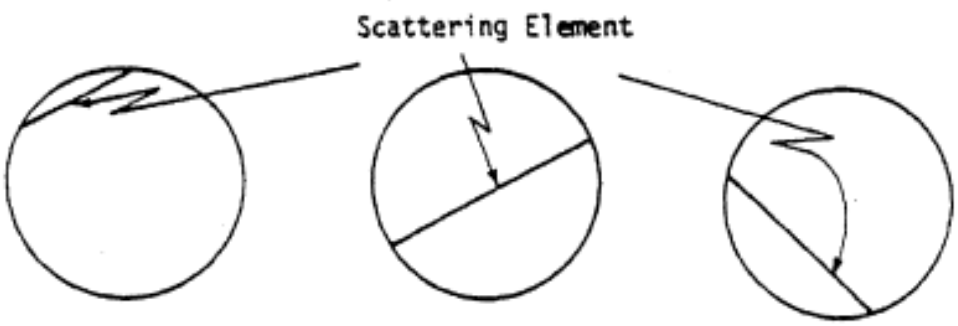

Figure 7. Angular Intensity Measurements Depend on the Location and Orientation of the Dominant Scattering Sources as Well as on Beam Uniformity.

2.4.1 Detector Field-of View

The actual value of an angular intensity measurement depends on the field-of-view (FOV) of the detector or a detector element. The FOV, in turn, depends on the distance between the

collection lens and the illuminated surface. Except for the simplest type of surface, i.e., a flat plate, distances will vary because of changes in object shape and illumination angles. In theory, distances could be calculated and their effect compensated. However, a more effective and more accurate approach is to directly compensate for changes in FOV by placing a Lambert reflector at the irradiated spot.

One way to make the measurements is to match the detector FOV to the spot area. This gives a measurement that is averaged over the solid angle. Therefore, the smaller the FOV, the more precise the angular intensity measurements. A small FOV might be desirable then if intensity is changing rapidly with angle. Another, and perhaps more important, reason for wanting a small FOV is to locate "bad" spots within the illuminated area. In other words, a surface may, in general, be a low scatterer except for a few features, and we would like to know which features are the culprits.

One way to do this is to use an imaging array such as a CCD. The individual pixels have a small instantaneous FOV while the total FOV can be matched to the spot. Individual pixel measurements would indicate bad spots, or the measurements could be statistically analyzed to determine variability of the measurements.

2.4.2 Calibration Techniques

In addition to the above mentioned compensation for FOV changes, variations in source power must be compensated. All the contemplated light sources have power outputs that vary with time. Solar power, for instance, varies because of clouds, time of day, and season. The calibration technique is to normalize all measurements by the instantaneous power output of the

source. If a chopper is used, this is easily done by reflecting some fraction of the total available power onto a detector. In the case of a very large heliostat, this would not be feasible, but a light-meter or a pick-off measurement would suffice.

2.5 ERROR ESTIMATES AS A FUNCTION OF SPOT SIZE

We previously stated that measurement errors are reduced by using larger test areas. Since this may not be obvious, we will examine in more detail how the errors might occur. As a first step, consider how the length of a board is measured.

Suppose the board is about 8 feet long, and we have a ten-foot tape measure. We would obviously hook the tape over one end of the board and then read the length from the tape measure. Assuming the tape measure is accurate and is not cocked there are several sources of error. First, there is uncertainty in lining up and reading the edge of the board with respect to the scale marks. Second, the length may actually vary depending on where the tape is "hooked." These errors are random and can be reduced by averaging a number of measurements. In general, the uncertainty in the measurement varies inversely as $1/\sqrt{N}$, where N is the number of measurements.

Now suppose that a tape measure is not available and that, instead, measurements are to be made with a 6-inch ruler. If there is any error in the length of the ruler, this systematic error increase <u>linearly</u> with the number of measurements. In addition there will be a random reading error with each measurement. This sort of error is known as a random walk error, and its estimated magnitude is $\sqrt{N}\, M_{rms}$ where M_{rms} is the root-mean-square value of the reading errors. (This is also called the standard deviation of the measurements.) The net error, ε, can be written

$$\varepsilon = N \Delta L + \sqrt{N}\, M_{rms}$$

where ΔL is the systematic error in the length of the ruler. Since N decreases with the length of the ruler, the net error clearly decreases as the length of the ruler is increased.

The situation is similar, though slightly different, when making angular intensity measurements of a surface. Consider a surface illuminated by a beam having a "known" cross-sectional area. (This is the equivalent of the ruler.) Any errors in the determination of the angle of incidence or in the beam area, power, or uniformity will introduce systematic errors. These errors may add or offset but their effect will increase linearly with the "number" of measurements made. In other words, if an area is fully illuminated, only one measurement is made and the effect is slight. If small beams are used, however, the effects add linearly and could be significant.

It should be pointed out that the lack of parallelism in both solar and solar simulator light sources is a potential source of serious error. Because of the lack of parallelism, beam area will increase with distance and therefore, in general, with angle. The effect is approximately ten times worse for a solar simulator because of the approximate ±3 degrees normal divergence of the beam.

In addition to these potential systematic errors, there will be random errors common to any measurement. Beam non-uniformity will generate some of the randomness because scattering will depend on the specific location of micro-defects within the beam. Power fluctuations and normalizations will also introduce random errors. The net error, ε, could be expressed as

$$\varepsilon = N(\pm A_e \pm P_e \pm \theta_e) + \sqrt{N}\, M_{rms}$$

where A_e, P_e, and θ_e represent uncertainties in beam area, beam power, and the angle of incidence, respectively. The M_{rms} represents the rms value of the random errors in the measurements. Thus, just as in the case of measuring the length of a board, it is generally better to minimize the number of measurements if the objective is to minimize error.

3. MEASUREMENT FACILITY ISSUES -- SCANNING VERSUS FLOOD ILLUMINATION TECHNIQUES

3.1 ASSUMPTIONS MADE

As will become apparent in subsequent parts of this section, an important parameter in evaluating trade-offs between scanning and flooding viability is the time required to make measurements corresponding to a whole body signature. Accordingly, this evaluation will be predicated on two assumptions -- more properly observations -- that mitigate the impact of unacceptably long scan-times. These assumptions include:

1. All test objects of interest will exhibit a preferential direction or orientation bias that will control the overall optical signatures in the viewing geometry of interest in this problem; and,

2. An initial, coarse grained preliminary scan may be done of the preferential surface -- by either (human) visual or electro-optical viewing techniques -- to identify physical areas that warrant fine-grained, detailed measurement (i.e. edges, corners, cracks, etc.).

The first assumption is based on the fact that many objects of interest will be protected with a large-shield. Moreover, many unshielded objects are deployed such that they orient themselves in a specific direction to accomplish their mission. The second assumption, acknowledges that certain easily observed regions of a space object are likely to dominate the optical signatures of the whole object whereas other regions will contribute little or nothing to the total optical cross-section.

3.2 REQUIREMENTS

Figure 8 shows three classes of objects in low and high altitude deployment modes. At high altitudes the objects appear as either points or barely imaged objects. At low altitudes the viewing aspect depends on the type of object--specifically on whether it is a "pointer" or "setter" and whether it is shielded.

TYPE / DEPLOYMENT	UNSHIELDED "POINTER"	UNSHIELDED "SETTER"	SHIELDED OBJECT
LOW ALTITUDE	CHANGING ASPECT	RELATIVELY CONSTANT ASPECT	"CONSTANT" ASPECT
HIGH ALTITUDE	POINT OBJECT	N/A	POINT OBJECT

Figure 8. Object Deployment by Type.

3.3 MEASUREMENT TECHNIQUES -- EXAMPLES TO SCOPE SELECTED PROBLEMS

Two concepts for making measurements have been postulated for further discussion. The basic elements of these concepts are listed in Table 1. The concepts differ in how or whether the test object is moved and in how it is illuminated. All of the concepts include light-trapping walls as the preferred means for absorbing specular reflections. (It is felt that movable absorbers are too difficult to implement --especially if there are secondary reflections.) All the concepts also include large numbers of wall- or dome-mounted detectors in order to reduce measurement times.

A. TRANSLATING AND ROTATING OBJECT/MOVABLE OPTICS

- TRANSLATING TURNTABLE
- VERTICAL MOTION OPTICS/TILTING MIRRORS
- DETECTOR DOME
- LIGHT-TRAPPING WALLS

B. MOVABLE OBJECT/STATIONARY ILLUMINATION

- FLOOD-LOADING HELIOSTAT
- TRACKED CEILING CRANES FOR LIFT, TILT, TRANSLATION AND ROTATION OF OBJECT
- WALL-MOUNTED DETECTORS
- LIGHT-TRAPPING WALLS

NOTE: ALL CONCEPTS HAVE STATIONARY OR FIXED-ANGLE DETECTORS

Table 1. Test Facility Concepts

Concept A uses a relatively simple rotating/translating turntable to move the object. Heliostat and/or solar simulator light sources provide the illumination by means of movable optics.

Concept B uses a large heliostat to completely illuminate at least the full width of the object. Other than the heliostat, the optics are stationary and the angles of illumination are varied by moving the object with ceiling cranes. This approach should minimize measurement errors and synthesis problems.

3.3.1 Facility A Description

Figure 9 illustrates the Concept A Facility. The test object is moved by a translating, rotating turntable. A solar simulator or heliostat provides the illumination. Movable mirrors direct the illumination to a mirror assembly that illuminates the object. A small number of detectors are attached to the mirror assembly to monitor "backscattered" irradiation. The majority of the detectors are mounted on a dome enclosing the test area and their pointing would have to change as the illuminating spot moved.

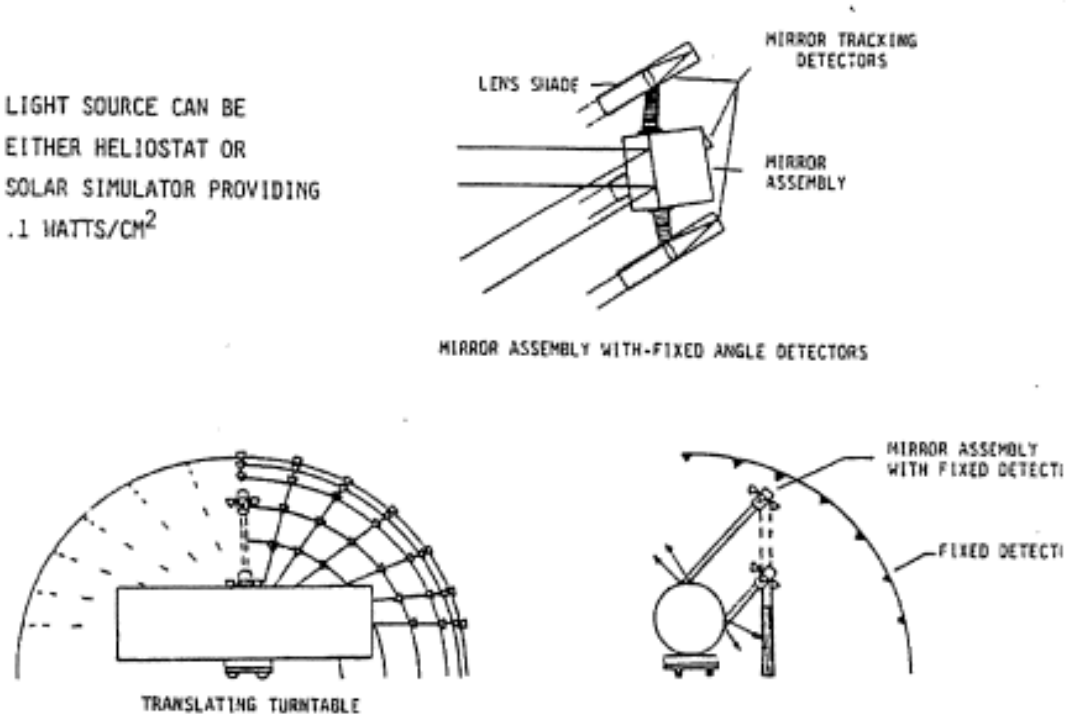

Figure 9. Concept A
(Translating and Rotating Object/Movable Optics)

In Concept A the illumination source is chopped and the detectors are operated in a phase-locked loop mode. This eliminates problems with unchopped stray light and increases the sensitivity of the detector measurements.

3.3.2 Facility B Description

Figure 10 illustrates a possible configuration for the Concept B Facility. The key feature is a very large heliostat to provide illumination. The heliostat directs the illumination to a fixed mirror that, in turn, illuminates the object. The beam is large enough to completely illuminate the width of the object so that synthesis problems are largely eliminated. This might require the largest heliostat ever built, but optical quality requirements are minimal.

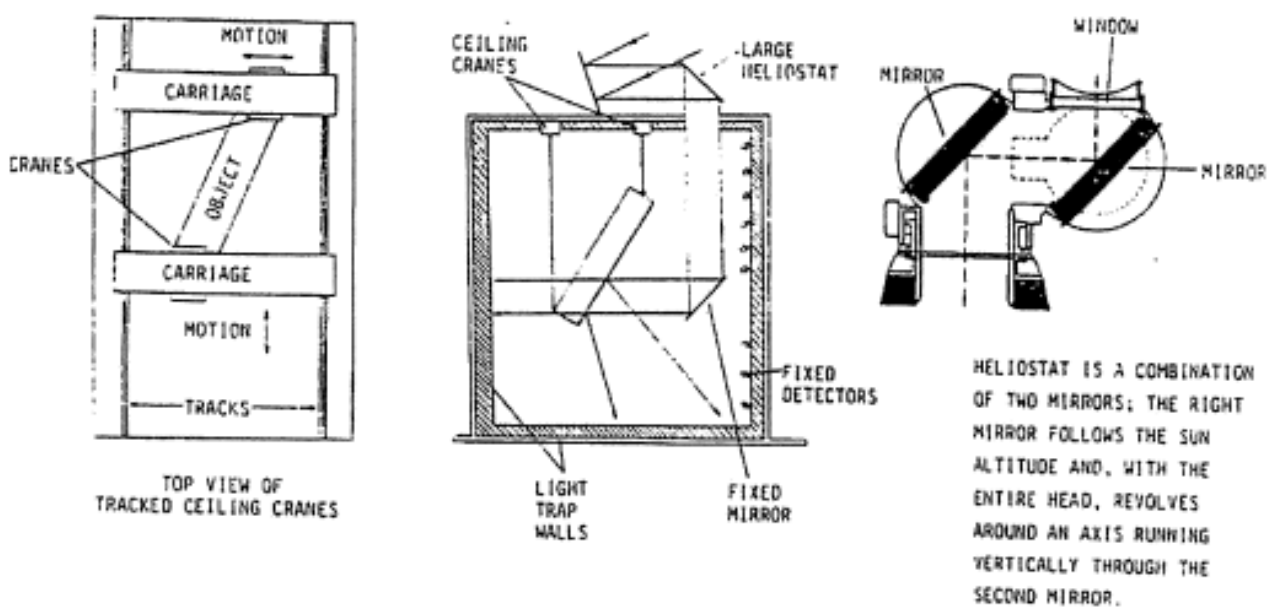

Figure 10. Concept B
(Movable Object/Stationary Illumination).

The angle of incidence and position of the beam on the object are altered by moving the object with ceiling cranes. The cranes lift or tilt the object with respect to the fixed beam. One possible advantage of this arrangement is that the fixed detectors have a constant angular relationship to the incident beam. This should simplify computations compared to Concepts A. Because of the size and total power in the beam, however, chopping is not feasible and measurement sensitivity will be inferior to the other concepts. This, however, may be offset by greatly increased power levels.

3.3.3 Technical Factors Common to All Facility Concepts

Several features have been postulated that are common to both concepts. This directly simplifies comparison. One is the use of light-trapping walls to absorb reflected radiation. The main reason for this is that curved surfaces and secondary reflections can direct energy over a wide range of angles and movable absorbers would be difficult to implement and would probably interfere with some angular measurements.

All concepts have fixed detectors mounted on domes or walls to measure radiant intensity at various angles. The basic purpose is to eliminate the time that would be required to move a single detector or small set of detectors around.

3.3.3.1 Light-Trapping Walls

There are undoubtedly numerous ways to build light-trapping walls that are far superior to "flat black" paint in their ability to absorb radiation. The basic idea is to cause the light to undergo a large number of reflections before being ultimately reflected away from the wall. This implies that outer edges should be sharp so that energy is not reflected back after a single reflection. Surfaces should also be smooth or

mirror-like so that energy is not excessively scattered at each reflection. A stack of razor blades is excellent for this purpose but probably impractical for large areas. The equivalent of either the razor blades or a Rayleigh horn might be constructed of a variety of materials. (The Rayleigh horn is shaped like a cornucopia, but similarly curved surfaces like those shown in Figure 11 might also be effective.)

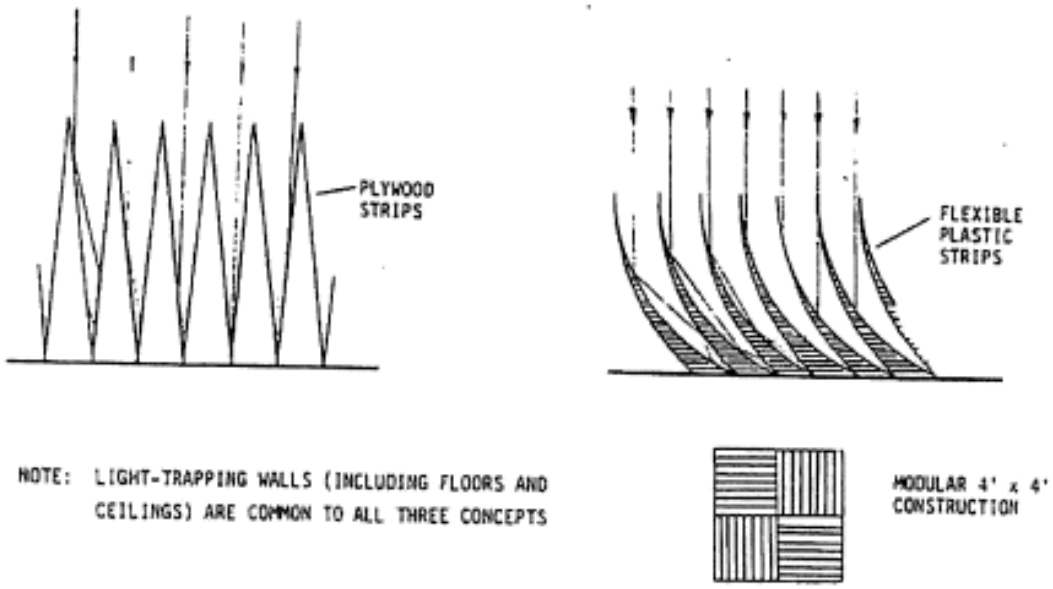

Figure 11. Light-Trapping Wall Designs.

On the other hand, it may be that the light-trapping walls will not have to be as efficient as we have assumed. A combination of paints, velvet curtains, and relatively small, movable absorbers might suffice. The answer will depend on geometric factors as well as on specific designs for the illumination and detection systems, and on experimental verification.

3.3.3.2 Detector Domes

In the preliminary analyses, it has been assumed that measurement times should be minimized by making all detector measurements simultaneously. This means large numbers of fixed detectors mounted on domes or walls. In Concept A, however, the location of the illuminated spot changes so that the "fixed detectors must be pointable to the various locations. The calculation of the angle relative to the incident beam could be tricky in the sense that it might require considerable data processing.

In the case of Concept B, where the illuminating beam is fixed, the detector pointing angles can also be fixed. This eliminates the data processing, but it is not clear how the angle would be measured because of the large spot size. The field-of-view and detector selection would probably be quite different from the other concepts. Imaging sensors, for instance, would indicate "true" object visibility with little need for synthesis.

If the object was stationary then a full dome (see Figure 12) is required to cover all possible observation angles. If, however, there are preferred observation angles, as in Concept A, then a half dome might be adequate.

Figure 12. Full and Half Dome Designs.

3.4 REQUIREMENTS COMPLIANCE

There are only two basic requirements for making the measurements of interest:

1. An "accurate" estimate of the visibility of large objects must be available from the measurements.

2. The measurements must be completed in a reasonable time, i.e., days or weeks are preferable to months.

The factors affecting the accuracy of the visibility estimates have been reviewed in Section 2. One conclusion is that accuracy improves with increased spot size. Of course, a large scan spot size is also desirable from the standpoint of reducing total scan time. These points are critical.

The total scan time is a function of the ratio of total object area, A_t, to scan spot area, ΔA. If there was a complete scan of the total area, then the time to scan for a <u>single</u> illumination angle, T_1, would be proportional to this ratio times the scan period, τ_s. (The scan period is the time required to make one set of measurements and move to the next scan area.) In this case, for a single illumination angle, the total time to scan, T_0, would be

$$T_0 = \tau_s \left(\frac{A_T}{\Delta A} \right) \quad .$$

If, however, a relatively few statistical measurements of simple surfaces are adequate for estimating visibility, then the total scan time can be reduced. Suppose a fraction, f, of the

total area is complex and the remainder is simple. Then, if 100 percent of the complex area is scanned, but only 10 percent of the simple area, the scan time for a single illumination angle, T_1, can be written as

$$T_1 = T_0(.9f + .1) \quad .$$

The relative reduction in scan time as a function of the complex fraction, f, is shown in Figure 13.

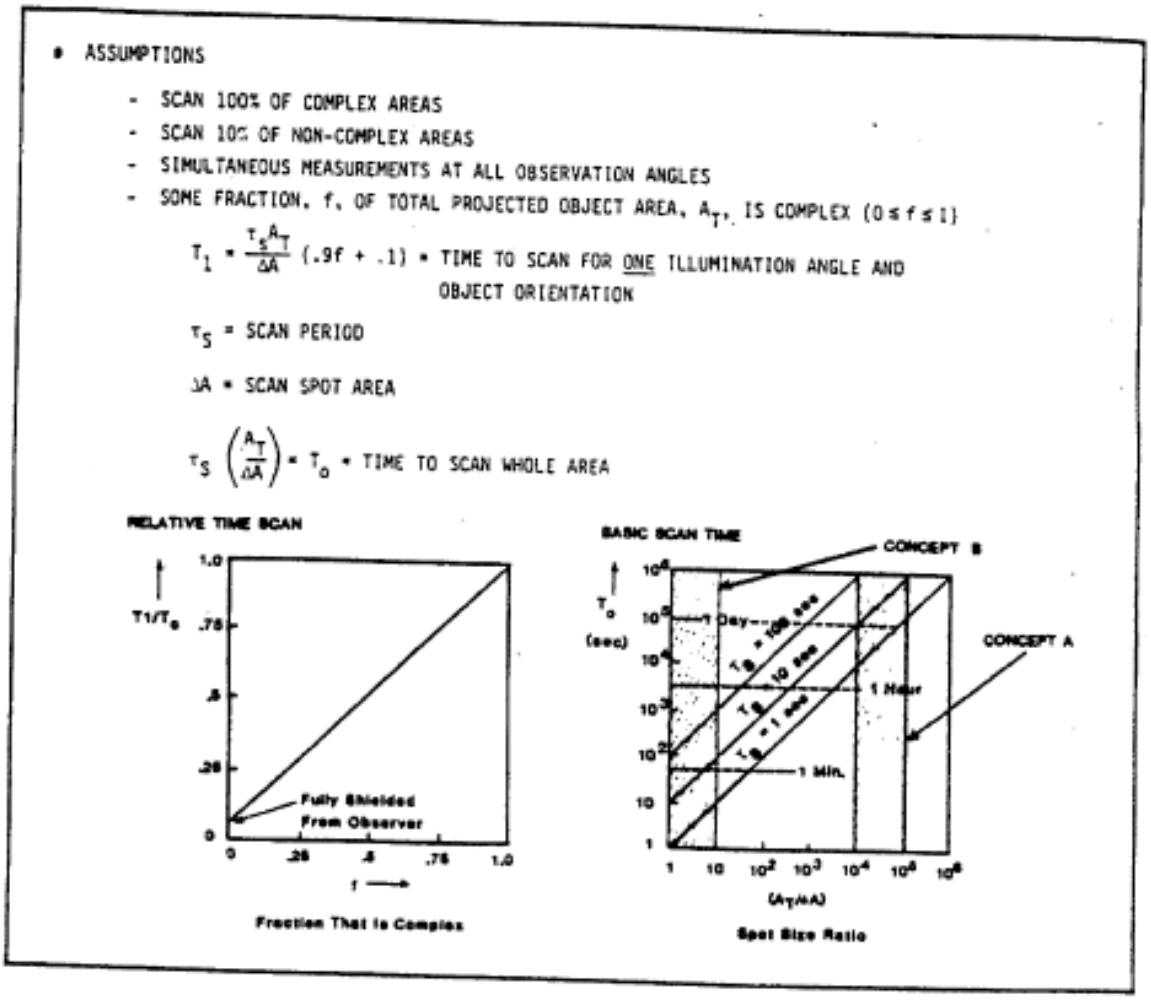

Figure 13. Time-To-Scan Considerations

The scan period will vary for the different concepts. For instance, in Concept B, the scan period would probably be measured in minutes because the spot is moved by moving the object. Scan periods of 10 to 100 seconds might be reasonable for the other concepts. The basic scan time for one illumination angle, T_0, might therefore range from roughly an hour to days.

The time to scan through a set of illumination angles will, of course, be directly proportional to the number of angles. We would expect that some 10 to 20 illumination angles would be sufficient so that the total scan time for Concept B might be less than a week, whereas it might be months for the other concept.

3.5 SUMMARY

Table 2 summarizes the advantages and disadvantages of the concepts. Concepts A may be simpler to implement, at least in some ways, than Concept B. There are some serious doubts about the potential accuracy of the visibility estimates derived from these concepts, however. This is particularly true if a solar simulator is used for the illumination source. Concept B largely avoids the synthesis problems by giving a direct indication of visibility, but, in order to do so, requires the construction of a very large heliostat.

Concept B also has the advantage of being faster than the other concepts. If the beam from the heliostat were 10 meters in diameter, for instance, only two measurements per illumination angle would probably be sufficient. Conceivably all the desired measurements could be made in less than a day.

CONCEPTS	ADVANTAGES	DISADVANTAGES	COMMENTS
A. TRANSLATING AND ROTATING OBJECT/ MOVABLE OPTICS (TURNTABLE)	RELATIVELY SIMPLE OPTICAL REQUIREMENT CAN UTILIZE HELIOSTAT AND/OR SOLAR SIMULATOR SOURCES	POSSIBLE SYNTHESIS PROBLEMS	TOTAL SCAN TIMES OF LESS THAN A WEEK FEASIBLE
B. MOVABLE OBJECT/ STATIONARY ILLUMINATOR (FLOOD-LOADING HELIOSTAT AND CEILING CRANES)	ELIMINATES UNCERTAINTIES IN SIGNATURE SYNTHESIS FAST	REQUIRES VERY LARGE, MOVABLE MIRRORS CHOPPING IMPRACTICAL	TOTAL SCAN TIMES OF A FEW HOURS FEASIBLE

Table 2. Summary of Concept Advantages and Disadvantages.

4. SUMMARY AND OUTSTANDING TECHNICAL ISSUES

4.1 SUMMARY

Serious technical uncertainties currently exist in estimating the visibility of large objects. A more careful theoretical analysis augmented by an experimental evaluation of selected parameters is definitely in order.

More specifically, the time to complete measurements remains as the key technical consideration. As discussed previously this is strongly dependent on the characteristics of the objects being tested. For instance, if the objects are very simple (approximately a flat plate), then a few statistical measurements would be sufficient and measurement time should be no problem. Scanning concepts, such as A and B, would be satisfactory and should be a less expensive solution. On the other hand, if the objects are complex, there are some doubts about the suitability of scanning concepts. A complete, time-consuming scan of complex surfaces is probably required. And the potential for systematic and random errors increases with the number of measurements.

4.2 Example, Specific Technical Issues Outstanding

In addition to the above general issues, there are specific technical questions that should be resolved -- likely by simple and inexpensive experiments. Some of the key technical questions include:

> How serious are secondary reflections and how can they be handled?

What is the efficiency of various light trap designs and what is the difficulty in their large scale fabrication?

How do the various detectors and light measurement devices (including the eye) compare?

What specific problems are there in using lasers or solar simulators for illumination?

Appendix B

Brown/Perry
News Conference
1980-08-22

http://www.afa.org/magazine/Aug2006/Brown.pdf

Friday, Aug. 22, 1980

Pentagon News Conference
Secretary of Defense Harold Brown
Under Secretary of Defense William J. Perry
Lt. Gen. Kelly Burke, DCS for R&D

Mr. Thomas B. Ross, ASD/PA: Ladies and gentlemen, the ground rules are that everything written or spoken at this conference is on the record and not to be used until the press conference is over.

Dr. Brown: Good afternoon, ladies and gentlemen.

I am announcing today a major technological advance of great military significance.

This so-called "stealth" technology enables the United States to build manned and unmanned aircraft that cannot be successfully intercepted with existing air defense systems. We have demonstrated to our satisfaction that the technology works.

This achievement will be a formidable instrument of peace. It promises to add a unique dimension to our tactical forces and the deterrent strength of our strategic forces. At the same time, it will provide us capabilities that are wholly consistent with our pursuit of verifiable arms control agreements, in particular, with the provisions of SALT II.

For three years, we have successfully maintained the security of this program. This is because of the conscientious efforts of the relatively few people in the Executive Branch and the Legislative Branch who were briefed on the activity and of the contractors working on it.

However, in the last few months, the circle of people knowledgeable about the program has widened, partly because of the increased size of the effort, and partly because of the debate under way in the Congress on new bomber proposals. Regrettably, there have been several leaks about the stealth program in the last few days in the press and television news coverage.

In the face of these leaks, I believe that it is not appropriate or credible for us to deny the existence of this program. And it is now important to correct some of the leaked information that misrepresented the Administration's position on a new bomber program. The so-called stealth bomber was not a factor in our decision in 1977 to cancel the B-1; indeed, it was not yet in design.

I am gratified that, as yet, none of the most sensitive and significant classified information about the characteristics of this program has been disclosed. An important objective of the announcement today is to make clear the kinds of information that we intend scrupulously to protect at the highest security level. Dr. Perry, my Under Secretary of Defense for Research and Engineering and a chief architect of this program, will elaborate on this point further.

In sum, we have developed a new technology of extraordinary military significance. We are vigorously applying this technology to develop a number of military aircraft, and these programs are showing very great promise.

We can take tremendous pride in this latest achievement of American technology. It can play a major role in strengthening our strategic and tactical forces without in any way endangering any of our arms control initiatives. And it can contribute to the maintenance of peace by posing a new and significant offset to the Soviet Union's attempt to gain military ascendancy by weight of numbers.

I would now like to ask Bill Perry to give you some additional details on our stealth program. Bill.

Dr. Perry: World War II demonstrated the decisive role that airpower can play in military operations. It also demonstrated the potential of radar as a primary means of detecting aircraft and directing fire against them. On balance, though, the advantage clearly was with the aircraft. Subsequent to World War II, both the ground-launched and air-launched defensive missiles were developed and most significantly they were "married" with radar fire control systems. This substantially increased the effectiveness of air defense systems indeed to shift the balance against the aircraft. For the last few decades we have been working on techniques to defeat radar controlled air defense systems. Presently, our military aircraft make substantial use of electronic countermeasures, popularly known as jamming, which tends to degrade the effectiveness of these radars. Additionally, whenever practical our aircraft fly low, they fly close to the ground, putting them in what radar designers call the "ground clutter" because that ground clutter also degrades the effectiveness of the radars. By these means, we have maintained the effectiveness of our military aircraft in the face of very formidable and very effective radar-directed defensive missiles.

However, the Soviets continue to place very heavy emphasis on the development and deployment of air defense missiles in an attempt to offset the advantage which we have in airpower. They have built thousands of surface-to-air missile launchers. They employ radars with very high power and with a tracking technique which is known as monopulse, both of which tend to make electronic countermeasures very difficult to employ. And in just the last few years, they have developed air-to-air missiles which are guided by what we call "look-down" radars, and these radars that have special tracking circuits which allow them to track an aircraft flying low to the ground. That is an aircraft which is flying in the so-called "ground clutter."

Because of these developments and because of the importance we attach to maintaining our air superiority, we have for years been developing what we call "penetration" technology: the technology that degrades the effectiveness of radars and other sensors that are used by air defense systems. A particular emphasis has been placed on developing that technology which makes an aircraft "invisible" to radar. In the early '60s, we applied a particular version of this technology to some of our reconnaissance aircraft. And again in the 70s we applied it to the cruise missiles then being developed both for the Tomahawk and the ALCM. By the summer of 1977, it became clear that this technology could be considerably extended in its effectiveness and could be applied to a wide class of aircraft including manned aircraft. We concluded that it was possible to build aircraft so difficult to detect that they could not be successfully engaged by any existing air defense systems. Recognizing the great significance of such a development we took three related actions: first of all, we made a ten-fold increase in the investment which we are making in this penetration technology, the underlying technology which allows us to defeat the radar systems. Secondly, we initiated a number of very high priority development programs with a purpose of applying this technology; and finally we gave the entire program extraordinary security protection, even to the point of classifying the very existence of the program.

Initially, we were able to limit knowledge of the program to a very few government officials in both the Executive and Legislative Branches and indeed succeeded in maintaining complete secrecy about the program. But, as the program increased in size....and its current annual

funding is perhaps 100-fold greater than it was at the initiation of the program, it did become necessary to include more people in the knowledge of the program. But today the existence of a stealth program has now become public knowledge. But even as we acknowledge the existence of a stealth program, we will be drawing a new security line to protect that information about the program which could facilitate Soviet countermeasures. We will continue to protect at the highest security level information of the following nature:

a. First of all, the specific techniques which we employ to reduce detectability;

b. Secondly, the specific degree of success we have achieved with each of these techniques;

c. Third, the characteristics of specific vehicles being developed;

d. Fourth, funds being applied to specific programs; and finally the schedules or the operational dates which go with these specific programs.

With these ground rules, I think you can see that I am extremely limited in what I can tell you about this program. I will volunteer this much. First of all, stealth technology does not involve a single technical approach, a single gimmick so to speak, but is rather a complex synthesis of many. Even if I were willing to describe to you how we do this, I could not do it in a sentence or even in a paragraph. Secondly, while we have made remarkable progress in this technology in the last three years, we have been building on the excellent work done in our defense technology program over the last two decades. Third, this technology—theoretically at least—could be applied to any military vehicle which can be attacked by radar-directed fire. In our studies, we are considering all such applications and are moving with some speed to develop those particular applications which on the one hand are the most practical and on the other hand which have the greatest military significance. Finally, I can tell you that we have achieved excellent overall success on the program and that that has included flight tests of a number of different vehicles.

Q: Can these technologies also defeat other means of detection, such as thermal, and infrared and so on?

Dr. Brown: The general description of stealth technology includes ideas, designs that are directed also at reducing detectability by other means. Radar is the means that is best able to detect and intercept aircraft now. It's no accident that the systems that exist are radar systems. But stealth technology extends beyond radar. Bill, do you want to add anything there?

Dr. Perry: That is correct.

Q: I ask because you mention other vehicles and I wonder if you're getting ready to have a complete turnover in the whole military inventory, tanks, and all the rest.

Dr. Brown: It's a little too early to say that. I think what Bill was saying was that stealth technology is applicable against anything that is detected and attacked through detection by radar. But how practical it is for various kinds of vehicles is another matter.

Q: Gentlemen, you refer here to its effectiveness against existing air defense systems. How about the kind of air defense systems which the Russians seem to be moving toward in the year 1990?

Dr. Brown: Those are the ones that we are talking about. The ones that are now in development and could be deployed during the rest of this decade are the kinds of detection systems that we believed that this will be able to render effective. It will always be the case that whenever there is a major new development of military technology, a measure let's call it, there will be countermeasures and there will be counter countermeasures. We've been looking at both of those. Our judgment is that the balance is strongly tilted in the direction of penetration by this technology and that there will be later fluctuations around that new equilibrium point.

Q: Is there any sign that the Soviets might be able to catch up and match this technology for penetrating themselves?

Dr. Brown: It depends on how much they do and how fast they are able to do it. We are not aware of any comparable effort in the Soviet Union. But of course, the Soviets are the ones who have spent tens of billions, probably over $100 billion, on air defense. And this favors penetration over air defense. A Soviet development of this kind would also make our air defense less capable, except to the extent that we would be ahead on countermeasures, but we haven't expended nearly as much on air defense. Bill, do you want to add to this?

Dr. Perry: That's correct.

Q: Is this applicable to existing vehicles, existing aircraft?

Dr. Brown: These are new designs.

Q: You'd have to build new things to take advantage....

Dr. Brown: These are new designs.

Q: I'm puzzled by your comments about how secret this is. If this was such a secret technology, why was the possibility of a bomber with lower radar cross-section alluded to in the arms control impact statements in 1980, in Carter's Georgia Tech speech and in your own posture statement?

Dr. Brown: Well, we have always tried to reduce radar cross-sections. That is hardly a revolutionary new idea and indeed successive generations of aircraft have had lower crosssections. Indeed, the air launch cruise missile has a lower radar cross-section than the B-1 bomber by about a factor of what....100. So that....that's not a new idea. The new idea is how to reduce it still further and how far you can reduce it.

Q: The stories written in March of 1979 about an invisible bomber based on the arms control impact statement. In other words, it seems like it wasn't a secret a year ago.

Dr. Brown: Then why are you all here? (Laughter)

Q: When are we likely to see this invisible bomber? How far down the pike is it?

Dr. Brown: Well, there have been flight tests, as Bill said. We also do not intend to make the details of the program including the appearance of the vehicles public.

Q: What kind of ball park are you talking about? Are we talking a decade or....?

Dr. Brown: It's hard to believe that you can have things operational for very long and not let

some things get out, but we're going to try to deep that kind of detail secret as long as we possibly can.

Q: On Sunday last week, you said the Administration does not have a plan to build a manned bomber.

Dr. Brown: That's not what I said. What I was asked was, and I was there so I know what I said. What I was asked was: Will there be a decision on building a new bomber before the election?

My answer was, there will not be a decision on building a new bomber this year.

We have a number of advanced designs in the design stage based on various kinds of technologies, including this one. The authorization bill for the Fiscal '81 defense appropriation bill which is now in the final stages of adoption, and the report that accompanies it from the conference committee, calls on the Defense Department to evaluate for use as a multi-purpose follow-on bomber, B-1 modifications, FB-111 modifications, and advanced technology and to decide by March 31st. that's compatible with our design studies, the status of our design status.

Q: (inaudible).

Dr. Brown: Well, it in the design stage and I would judge that we would be able to evaluate it by roughly that time next year. Again, let me defer to Kelly and to bill on that.

Gen. Burke: Yes, that evaluation schedule is compatible with....I believe it is March 15th rather than March 31st.

Q: Could you tell us whether there have been operational flights in reconnaissance aircraft using stealth technology?

Dr. Brown: No, I will not comment on operational matters or on the stage of development.

Q: It's been the suggestion that the Administration is releasing news of the stealth bomber now in order to answer charges by Presidential candidate Reagan that the B-1 bomber is one example of how the Administration has been soft on defense. Now how would you answer that? How would you answer Reagan?

Dr. Brown: First, I would repeat what I said which is that the decision on the B-1 was not based on the possibility of a stealth bomber because that was not then even in the design stage. As to how good an answer this major breakthrough is to such charges, I will leave that to you to judge.

But as to its purpose, I want to be quite clear. That was not the purpose of our action at this time. We would much preferred to have kept this secret for a longer time, as long as we could. But given the expansion of the circle of people who knew which was inevitable because of the increase in the size of the program and the involvement of additional congressional people, Congress, after all does have a constitutional responsibility to appropriate funds.

I suppose that it was inevitable that leaks would occur. It was only after leaks that had occurred to at least one magazine, one newspaper, and at least one television network, that it became clear that the existence of the program could no longer be kept secret. It was only then that we decided that it was necessary to say as much as we said to draw a new line beyond which we would not be prepared to go.

Q: You are saying this is not a political reaction to Ronald Reagan, coming out here today and....

Dr. Brown: No, not at all. This is a reaction to the fact that the public knows as a result of these leaks that there is such a program. And it is important that we clarify some things and draw a new line.

Q: What do you think of the way Reagan's been reacting to our defense structure? I mean, using the ships story the other day and the charges about being soft on defense. Do you think he is being irresponsible?

Dr. Brown: That is a separate question. I have and will continue to try to avoid partisan characterizations. I believe that the Administration's defense program has been sensible by moving to increase our military capabilities steadily and significantly and continuously, we are responding properly to the kinds of military threats we might face.

I think it is a serious matter when individuals claim that the United States is very weak. When it is claimed that the Soviets greatly surpass us in all categories. I think that is incorrect and I think it undermines our security by emboldening our potential adversaries, dispiriting our allies, and misleading the American people. But you know, I'm not the one who has connected that with this program.

Q: Back to the aircraft. With the progress that you have made in penetration technology, has that led you and other senior defense officials to decide that the conventional bomber systems, B-1 variance, stretched B-111 are no longer the right way to go? Any new bomber will probably (inaudible) this technology?

Dr. Brown: The relative capabilities of existing and new technologies are part of the study in the case of the bombers that we will be doing. This certainly is a big factor, but I have not prejudged the outcome. Bill, what would you say?

Dr. Perry: The negative judgment which we made about the B-1 in 1977 we made without the benefit of a design study under way for the stealth bomber. It was just based on the relative ineffectiveness of the B-1 in the penetrating Soviet air defenses, not in comparison with any other potential bomber.

Q: Does it make any sense to build a plane....

Dr. Brown: Let's come back to the Burt question. We haven't responded. What he is saying is in the 1990s will there be anything but stealth aircraft, and I think the answer is yes, there will. Because, you know, there are various features for aircraft. The ability to detect the aircraft is a very important one, but there are other features of aircraft that also determine how capable they are. Kelly, do you want to comment on that?

Gen. Burke: Well, that's right, and of course, you can only prioritize one design goal at a time, and obviously you don't get any desirable feature without giving up some other desirable features.

Q: Have there been any new scientific breakthrough brought to bear in this? Have there been any new scientific principals, any breakthrough as you might say?

Dr. Brown: These are technological. There is no new fundamental law of science involved.

Q: General Kelly, I was wondering what your personal view was? There is a deadline in the Congressional mandate in the authorization bill, as you know, for a bomber to be flying in 1987. Would you be willing to gamble on stealth being ready by then, or would you like a stop gas airplane, or do you think maybe that deadline should be extended to see how stealth works out? What is your personal view on that?

Gen. Burke: That it's premature to try and answer that. Along with Rick's question, those are the explicit questions that we are seeking the answer in the recommendations we make to the Congress on the 15th of March and there is an enormous amount of work to be done between now and then, not just quantitative analysis but a lot of engineering evaluation.

Dr. Brown: It's too soon to say what the precise mix of our capabilities in the 1990s will be, but it is not too soon to say that by making existing air defense systems essentially ineffective, this alters the military balance significantly.

Q: Is Lockheed involved in this program, specifically, the Lockheed skunk works?

Dr. Brown: We have decided we are not going to reveal the names of any of the contractors because if we did, that would allow attempts to find out about this, to focus in on one or a few planes.

Q: You said that it was new technology. Does this mean that it is not retrofittable to existing aircraft? And if it requires a new generation of aircraft, how expensive a new generation of aircraft?

Dr. Brown: Bill, why don't you answer this? I think I answered the first part before.

Dr. Perry: I mentioned that this is a complex synthesis of many technologies. Some of them may be applicable to modifying existing airplanes. In their entirety, they are not. They require a design from the ground up.

The cost of airplanes built with this combination of technologies on a dollar per pound basis is probably not substantially different from the cost of building airplanes on a dollar per pound basis with conventional techniques.

Q: With its potential, what would you guess might be the percentage of craft that we have of this sort....?

Dr. Brown: I have a guess but I don't think I'll give it. I think it is so speculative it doesn't make sense to do that.

Q: ....unmanned vehicle are you referring to the cruise missile?

Dr. Brown: Well, any unmanned aerodynamic vehicle I guess you can describe as a cruise missile. But, you know....

Dr. Perry: Cruise missiles and drones.

Dr. Brown: Yes. But, you know, cruise missiles and drones share characteristics.

Q: Dr. Perry, you have said publicly that you will recommend to the gentleman on your left several hundred million dollars in the next budget for development of a penetrating bomber so

that by 1985 you could decide whether it could go into production for 1998 and IOC. On the assumption that you will still make such recommendation, will it involve the technologies being discussed here today?

Dr. Perry: I'm not prepared to come to that conclusion yet.

Q: What conclusion, sir?

Dr. Brown: That it will.

Dr. Perry: I'm not prepared to come to any conclusion about what I will recommend until next spring. That is when the recommendation will be made. And I'm still studying it, as is General Burke, as he indicated.

Q: You are no longer saying you will recommend inclusion of a penetrating bomber development in the next budget?

Dr. Perry: No. I'm saying that I have not determined yet whether that recommendation would be for a stealth bomber or some other design. That is still being considered.

Dr. Brown: Well, the next budget is 1982, and that is being formulated now.

Q: That is exactly the one Dr. Perry has spoken about publicly. Do we infer from your answer that you may recommend a bomber that is not of a stealth type; that it could happen?

Dr. Perry: I think you could infer from it that I still have an open mind on the question.

Q: Why would you recommend any other kind of a bomber for the out years than a stealth type?

Q: (inaudible)

Dr. Brown: You know, we have said several times that ability to penetrate is only one, albeit a major characteristic, of a new generation of aircraft. I think you have to look at all the characteristics, you know, range, payload, and everything else. I hope that we have left the impression, the proper impression, the one that I believe, that this is a very important characteristic. But I don't think that we should now draw a conclusion that we don't have to draw until next spring.

Q: Dr. Brown, you just said, though, that any system like this that can wipe out existing air defense alters the military balance in a significant way.

Dr. Brown: It sure does.

Q: All right. But if you're not going to penetrate with it, what difference does it make?

Dr. Brown: The potential already has the effect, but you know, this is a major advantage to such a system, but we're not going to make a decision now. We can just let you know what our impressions are, and I think we've made our impressions clear.

Q: No, but are you suggesting though, that despite the great advance you've made in this particular area, it might turn out that you can't apply it to a bomber system because it disturbs other necessary advantages of....

Dr. Brown: Yes. I'm sure you can apply it to a bomber system. I don't want to judge the overall characteristics of a design that's still in process. And you know, that, I think, is the proper attitude and it is the attitude I take. From what I've said and from your own reactions, it's fairly clear that a design with this technology and this capability to penetrate has a big advantage going for it.

Q: How about fighters, will it apply to fighter technology?

Dr. Brown: The same thing applies to fighters. I think you can apply this technology across the board. Bill? Do you want to be more specific?

Q: When you say all military vehicles, do you mean everything from ICBMS, to tanks, to ships, to everything?

Dr. Perry: In principle, it could be applied to any of them.

Dr. Brown: It doesn't help some as much as others.

Dr. Perry: It is our ability of applying it. The difference it would make in military effectiveness may be dramatically different from vehicle to vehicle.

Dr. Perry: The cost of applying it may be different.

Dr. Brown: Some vehicles aren't primarily detected with radar. They are detected by eyeball.

Q: Is the answer on whether a new bomber might be built that could not penetrate, and I do take that from the answer that that is conceivable....

Dr. Brown: No.

Q: Is it conceivable?

Dr. Brown: If we were sure it wouldn't penetrate....if we had real doubts about its penetration capability, we would cancel it just as we canceled the B-1.

Q: I didn't mean that. That would not have that technology. There would not be the stealth technology.

Dr. Brown: I think any new bomber; any new bomber will use some elements of this technology. There is just no doubt about that in my mind.

Q: One of the published reports said that three of these test vehicles crashed because of unorthodox configuration.

Dr. Brown: Bill, do you want to comment on that?

Dr. Perry: The report is incorrect.

Q: There were two crashes?

Dr. Brown: The report was incorrect, and the report was allegedly that they crashed, that there were crashes because of the unorthodox design.

Q: Let's rephrase it then. Have any of your invisible airplanes crashed?

Dr. Brown: We're not going to talk about the test program. I think all of you who have watched more visible test programs have seen what happens in a test program.

Q: Dr. Brown, do you personally believe that we need a new bomber of some kind for the '80s and '90s, or is that still an open question in your mind?

Dr. Brown: I continue to have an open mind on that. I am sure that we will continue to need to be able to have an air breathing component of our deterrent force. We have plans and we will have forces that do that using the cruise missile launched from B-52s, using penetration bombers, penetrating B-52s through the mid and probably through the late '80s. Beyond that, whether we need a purely penetrating component is an open question in my mind.

Q: How do you expect the Soviets to react to this and do you think it will have any effect on arms control talks?

Dr. Brown: I've spoken to the latter question in my statement. If you believe that a Soviet capability to shoot down all aerodynamic aircraft of the US is a good thing, then you should be very much against this development. If you believe that a US capability to penetrate Soviet air defenses contributes to deterrence as I do, then you will regard this as an advance in stabilizing the arms competition. There is no doubt that bombers which have a longer reaction time are not the destabilizing component. That's land-based fixed ICBM.

With respect to arms control, these like any other aircraft, if they are intercontinental aircraft, intercontinental bombers, heavy bombers would be included in that part of the agreement. If they are tactical aircraft, then they would be included in any, not SALT, but some other arms control agreement that covered those.

The Soviets, I am sure as a result, not of this revelation but as a result of the leaks over previous weeks, are already, I'm sure, looking very hard at this technology and scratching their heads hard and will go to work hard on countermeasures as you would expect. Because the Soviets have put so much more into air defense and have concentrated on large numbers much more than we....I think this benefits the United States and the military balance.

Q: Dr. Brown, it seems to me if you have an invisible bomber, then that could become a first strike weapon.

Dr. Brown: I don't understand. You mean ability to penetrate air defenses makes something....

Q: They can't see it.

Q: If they can't see or hear you coming....

Q: It would give you a little surprise. (Laughter)

Dr. Brown: The ability to penetrate air defenses is not a first strike capability. The ability to penetrate air defenses is a good retaliatory capability. Bombers are not the instrument of choice in a surprise attack. There is just not question about that.

Q: With this invisible bomber, you couldn't take off and bomb a target without anybody knowing you were coming?

Dr. Brown: They would know, but too late to intercept you. But not too late to retaliate.

Dr. Perry: Orr, I do want to emphasize the point, though, that the term invisible is strictly a figure of speech. It is not an invisible airplane. In the strict sense of the word it is not invisible. You can see it. And it is also not invisible to radar. It can be seen by radars if you get the airplane close enough to radars.

Dr. Brown: But too late to engage in air defense. But not too late to retaliate.

Q: Is this an evolving technology, are you going to be better at it in two years or five years?

Dr. Brown: Yes.

Dr. Brown: That's it. Thank you very much.

END TEXT

Appendix C

LDEF

http://setas-www.larc.nasa.gov/LDEF/index.html

NASA's Long Duration Exposure Facility (LDEF) was designed to provide long-term data on the space environment and its effects on space systems and operations. It successfully carried science and technology experiments that have revealed a broad and detailed collection of space environmental data. The LDEF concept evolved from a spacecraft proposed by NASA Langley Research Center (LaRC) in 1970 to study the meteoroid environment, the Meteoroid and Exposure Module (MEM).

LDEF had a nearly cylindrical structure, and its 57 experiments were mounted in 86 trays about its periphery and on the two ends. The spacecraft measured 30 feet by 14 feet and weighed ~21,500 pounds with mounted experiments, and remains one of the largest Shuttle-deployed payloads. The experiments involved the participation of more than 200 principal investigators from 33 private companies, 21 universities, seven NASA centers, nine Department of Defense laboratories and eight foreign countries. The post-flight special investigations and continued principal investigator research have increased the total number of investigators to between 300 - 400.

LDEF was deployed in orbit on April 7, 1984 by the Shuttle Challenger. The nearly circular orbit was at an altitude of 275 nautical miles and an inclination of 28.4 degrees. Attitude control of the LDEF spacecraft was achieved with gravity gradient and inertial distribution to maintain three-axis stability in orbit. Therefore, propulsion or other attitude control systems were not required, and LDEF was free of acceleration forces and contaminants from jet firings.

LDEF remained in space for ~5.7 years and completed 32,422 Earth orbits; this extended stay increased its scientific and technological value toward the understanding of the space environment and its effects. It experienced one-half of a solar cycle, as it was deployed during a solar minimum and retrieved at a solar maximum.

LDEF was retrieved on January 11, 1990 by the Shuttle Columbia. By the time LDEF was retrieved, its orbit had decayed to ~175 nautical miles and was a little more than one month away from reentering the Earth's atmosphere. Columbia landed at Edwards Air Force Base and was ferried back to NASA Kennedy Space Center (KSC) on January 26, 1990.

Following the deintegration of each experiment tray from the spacecraft at KSC, research activities included a radiation survey, infrared video survey, meteoroid & debris survey, contamination inspection, and extensive photo documentation. After these post-deintegration activities the experiment trays were shipped or hand-carried directly from KSC to the principal investigators' laboratories.

Chronology

(http://setas-www.larc.nasa.gov/LDEF/OVERVIEW/chrono.html)

1970 - NASA Langley Research Center (LaRC) proposed conceptual forerunner of LDEF, called Meteoroid and Exposure Module (MEM), to be first Shuttle payload.

June, 1974 - LDEF Project formally under way, managed by LaRC for NASA's Office of Aeronautics and Space Technology (OAST).

January, 1976 to August, 1978 - LDEF structure designed and fabricated at LaRC

Summer 1981 - LDEF preparations for December, 1983 target launch date

September, 1981 - First international meeting of LDEF experimenters held at LaRC.

1982 - LDEF structure tested for its ability to withstand Shuttle-induced loads

June, 1983 - LDEF shipped to KSC and placed in SAEF-2.

April 7, 1984 - STS 41-C (Shuttle Challenger) places LDEF in a nearly circular orbit at altitude of 275 miles at 12:26 p.m. EST

March, 1985 - Planned LDEF retrieval (via STS 51-D) deferred to later Shuttle flight.

January, 1986 to September, 1988 - LDEF's stay in space extended indefinitely when all Shuttle operations were suspended due to the loss of Challenger.

1987 / 1988 - Solar activity intensity threatens to accelerate decay of LDEF's orbit, influencing retrieval plans; retrieval target set for July, 1989.

June, 1989 - LDEF retrieval flight date, after slipping from July and then November, set for December 18 launch of Shuttle Columbia.

December 18, 1989 - STS-32 launch postponed until second week of January.

January, 1990 - STS-32 launched on January 9; LDEF retrieved at 9:16 a.m. CST on January 12; Columbia lands at Edwards Air Force Base, California, January 20.

January 26, 1990 - Columbia, with LDEF still in its payload bay, returns to KSC via ferry flight from Edwards Air Force Base.

January 30-31, 1990 - LDEF removed from Columbia in Orbiter Processing Facility, placed in a special payload canister, and transported to Operations and Checkout (O&C) Building.

February 1-2, 1990 - LDEF placed in the LDEF Assembly and Transportation System (LATS) and moved to SAEF-2 for experiment deintegration.

February 5-22, 1990 - Deintegration preparation activities take place, including extensive inspection and photo-documentation.

February 23 to March 29, 1990 - Experiment trays removed, closely inspected, individually photo-documented, packed, and shipped to home institutions for comprehensive data analysis.

April and May, 1990 - Deintegration wrap-up, including comprehensive investigation and photo-documentation of the LDEF structure.

June 2-8, 1991 - First LDEF Post-Retieval Symposium held in Kissimmee, Florida.

June 1-5, 1992 - Second LDEF Post-Retieval Symposium held in San Diego, California.

November 8-12, 1993 - Third LDEF Post-Retieval Symposium held in Williamsburg, Virginia.

Appendix D

Lincoln Experimental Satellites 8 & 9

(LES-8/9)

K140.01
JAN-JUN 1971
Vol 5

ETURN TO
istorical Research Division
325/HOA
laxwell AFB, AL 36112

Semi Annual History

of the

Directorate of Space

Period of 1 January 1971 - 30 June 1971

2 9 DEC 1986

[redacted] BY TIM

DECLASSIFIED IAW EO 12958
BY EXECUTIVE ORDER REVIEW TEAM
DATE: 10 Mar 96 REVIEWER: GC

3-78082-26
00909410

on 3 February 1971 at 0141 hours zulu.[22] The satellite is positioned over the Atlantic and is operating satisfactorily. This was the second NATO satellite to be launched. The initial launch occurred in March 1970 and the satellite is functioning normally.

LINCOLN LABORATORY

[redacted] The MIT Lincoln Laboratory is involved in a program to demonstrate the technology necessary to deploy a highly survivable satellite communication system for command and control of the SIOP forces. The effort is based upon the use of two satellites (LES-8 and LES-9) carefully designed (both electronically and physically) so that detection of the satellite presence is extremely difficult. The satellites would use satellite-to-satellite communications links and would permit two way communications between aircraft and surface forces on a global basis. The anticipated launch of LES-8/9 is in September 1974.

VELA SATELLITE

[redacted] As indicated in the last reporting period, a series of actions were undertaken to designate an Air Force agency to assume management responsibility for the Vela Program upon completion of the R&D Phase. In a 5 January 1971 letter to AF/RD, AF/IN concurred with and forwarded an AFTAC letter regarding Vela Program responsibilities.[23] The position taken was that AFTAC would be the primary

---

22. 6555 Aerospace Test Gp Msg to RDSC & Others (U), 030300Z Feb 71, in RDSC, Safe #4, NATO-1.

23. AFIN Ltr (S), Subj: (U) Vela Satellite Management Transition, 5 Jan 71, in RDSC, Safe #8, Vela Transfer.

http://www1.cira.colostate.edu/ramm/hillger/SolRad-11A+11B+LES-8+9_cover.jpg

https://www.patrick.af.mil/heritage/Cape/Cape2/Images/cape061f.jpg

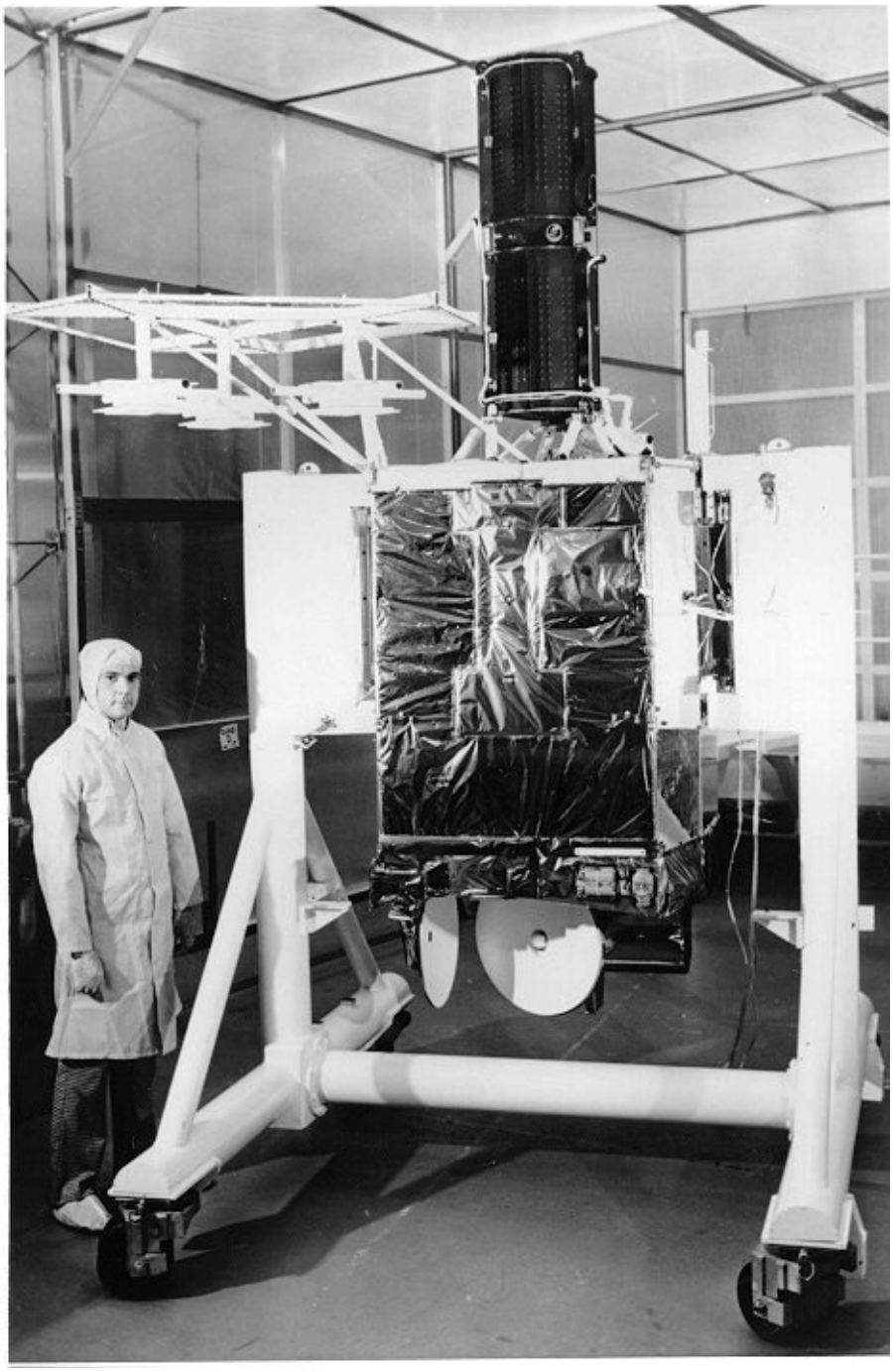

Flight Model, Lincoln Experimental Satellite

http://www.aero.org/publications/martin/martin-8a.html

Communication Satellites (4th Ed.)
Donald Martin

Chapter 1: Experimental Satellites (cont.)
[EXCERPTS]

Lincoln Experimental Satellites

LES-8 and -9

LES-8 and -9 [1–8] are the latest in a series of experimental military communication satellites developed by the MIT Lincoln Laboratory. They are operating with a variety of fixed and mobile terminals with the use of both UHF and K-band (36–38 GHz) for uplinks and downlinks. A K-band crosslink between LES-8 and LES-9 is a significant part of the program.

LES-9 Satellite

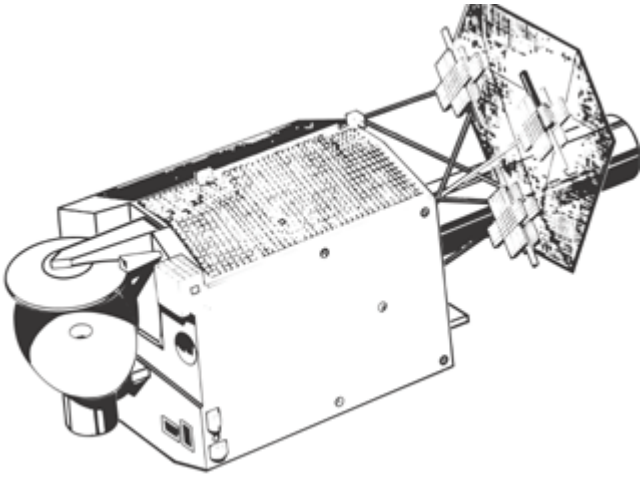

LES-8 and -9 are practically identical. Most of the electronic subsystems are contained in the satellite body, which is 46 in. long and about 44 in. across. The two radioisotope thermoelectric generators (RTGs) are mounted one upon the other on the back end of the satellite body. These RTGs provide all the electrical power used by the satellite; no solar cells are used. The UHF antenna is also attached to the back end of the satellite body. The K-band antennas and some electronics, plus Earth sensors, are mounted on the front end. The overall length of the satellite is about 10 ft. The satellite is three-axis-stabilized by a gimballed momentum wheel and 10 gas thrusters. The satellite details are as follows:

Approximately 10 ft long
LES-9, 948 lb in orbit, beginning of life
LES-8, similar to LES 9
Two RTGs, 152 W each initially, 130 W each after five years (design goal was 145/125 W)

Three-axis stabilization using a gimballed momentum wheel, ±0.1 deg about pitch and roll axes, ±0.6 deg about yaw axis
Cold gas propulsion for on-orbit use

http://pdf.aiaa.org/preview/1984/PV1984_1861.pdf

Autonomous stationkeeping system for the Lincoln Experimental Satellites (LES) 8 and 9
SRIVASTAVA, S. (MIT, Lexington, MA)
AIAA-1984-1861
IN: Guidance and Control Conference, Seattle, WA, August 20-22, 1984, Technical Papers (A84-43401 21-63). New York, American Institute ofAeronautics and Astronautics, 1984, p. 188-196.

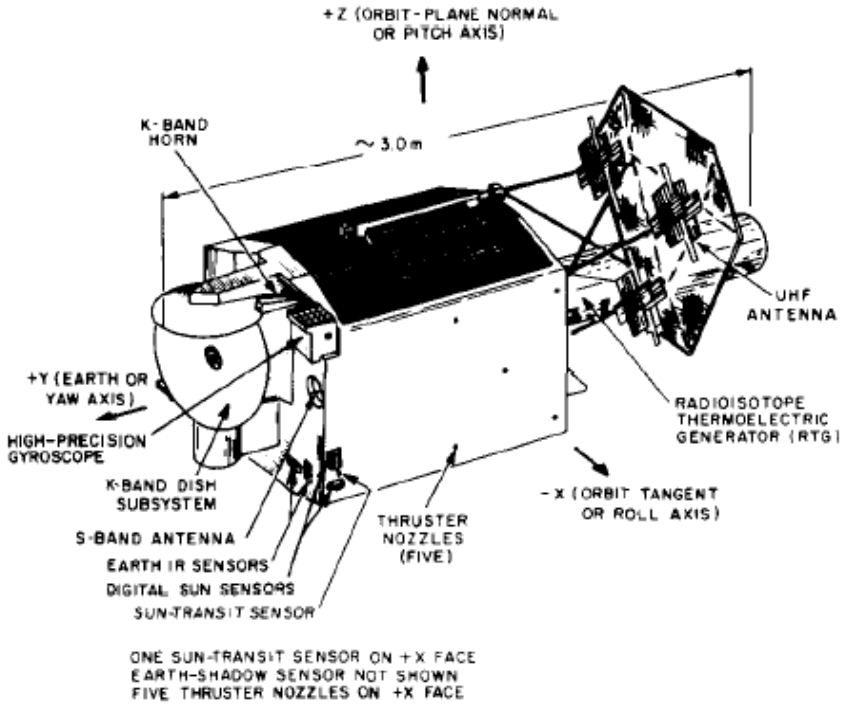

Fig. 1 Lincoln Experimental Satellites (LES) 8 and 9

http://paul.carr2.home.comcast.net/SigmaXi0609Ward.htm

Hanscom Sigma Xi, The Scientific Research Society, Meeting
Wednesday, 13 September 2006
MIT Lincoln Laboratory Auditorium
Refreshments: 3:30 PM, Talk 4 - 5 PM
Joint Meeting with the IEEE Life Members

LES-8/9: Thirty Years of Orbital Service

Dr. William W. Ward, Lincoln Laboratory

Lincoln Experimental Satellites 8 and 9 (LES-8/9) were launched from Cape Canaveral, Florida, on 14 March 1976. During the ensuing three decades they have more than met their development goals by demonstrating the military utility of their highly reliable and survivable links for strategic communication. They have also pioneered satellite-to-satellite communication links and have opened up the EHF spectrum for widespread use. The technologies they demonstrated have been transferred to operational DoD systems.

LES-8/9 turned out to have unanticipated capabilities. For example, they have made contributions to science through their support of radio-astronomy observatories throughout North and South America and Europe. Their inclined, circular, geosynchronous orbits provided lengthy daily intervals during which communication was possible between stations in the Arctic and Antarctic and stations in the U. S., something which geostationary satellites cannot do. Their inclined orbits made possible the estimation of the locations of terrestrial transmitters in the satellites' receive-frequency bands.

LES-8 was retired on 2 June 2004 after 28 years of service. LES-9 support continues to be called for by DoD users. This satellite is now in its fourth decade of active duty. Viewed in retrospect, the achievements of LES-8/9 are impressive. More important today, the problems faced during their development, testing, and operation in orbit have much to teach us as we face the problems that will come up in our own future work. There will be a display of LES-8/9 posters and artifacts in the area outside the Auditorium before and after the lecture.

Sourcebook note: Beginning in early 2005, amateur satellite observers began reporting flashes visible to the naked eye coming from LES-8. It is possible that these flashes are due to sunlight reflected from the reported plane mirror on the satellite which, having lost attitude control when it was retired from service in June, 2004, can no longer prevent such events.

http://www.satobs.org/seesat/Oct-2000/0131.html

Re: Observations of LES-8 and LES-9 ?
From: JAY RESPLER (jrespler@superlink.net)
Date: Mon Oct 09 2000 - 22:55:29 PDT

In reply to: Allen Thomson: "Observations of LES-8 and LES-9 ?"

Allen Thomson wrote:

> Has anyone observing GEO satellites tried to see LES-8 or LES-9 (1976-023A
> and B, 08746 and 08747)? If not, it might be an interesting exercise,
> because... [*of the 1971 Directorate of Space document above*]

> So are the things visible in a telescope?

I looked for them, unsuccessfully, in 9/94. They must be fainter than mag 13.

++

http://www.satobs.org/seesat/Mar-2005/0276.html

Another LES-8 (76-23A) sighting
From: Ed Cannon (ecannon@mail.utexas.edu)
Date: Sun Mar 27 2005 - 00:15:47 EST

I came across another report of 1x observations of what seems to have been LES-8 (08746, 76-023A):

http://www.groupsrv.com/science/post-715355.html

It can be compared to Brad Young's of a couple of weeks earlier and another that I received privately a couple of days later:

http://www.satobs.org/seesat/Feb-2005/0269.html

Here's some Lockheed-Martin information on LES-8 and LES-9, including an illustration of the spacecraft:

http://www.aero.org/publications/martin/martin-8a.html

Compare that illustration with this photo (which seems smaller than three-plus meters):

http://space.skyrocket.de/doc_sdat/les-8.htm

Those images do leave one wondering how it could be bright enough to be seen without magnification from geosynchronous range. It and LES-9 were powered by radioactive packages and have no solar panels.

Ed Cannon - ecannon@mail.utexas.edu - Austin, Texas, USA

++

http://www.groupsrv.com/science/post-715355.html

Hi,

Last night (3-10-05) I got a call from my brother-in-law who lives in dark-sky country outside of Temple, TX, with a question: What's that flashing thing near the very bright star in the SSW?

I live in Austin, TX, 75 miles away, but when I went out to look, sure enough, there it was... an irregularly flashing (anywhere from about 30 seconds to about 75 seconds) point in the sky. I couldn't

tie it to any star in my 8x35 binos, but it was roughly 6 degrees east of Sirius and maybe four degrees toward zenith.

I thought at first it might be an iridium flare satellite, but this flashing was stationary, and repeating, and there aren't any geosynchronous irridium satellites, are there? I watched it for 20 minutes or so, then went in to consult "Starry Night". When I returned to the sky 30 minutes later, it wasn't happening.

What did we see?

Thank you,

Rusty
N 30d 15.909'
W 97d 46.323'

++

http://www.satobs.org/seesat/Feb-2005/0269.html

Noss 3-3 Progress and Flashing Geosat
From: Brad Young (brad.young@domain-engineering.com)
Date: Mon Feb 28 2005 - 09:44:01 EST

[deletia]

Best of all, consistently "bothered" by 1X flashing geosat in S, as follows:
Obs RA Dec TimingMag Inst

1	15h15 +1.5	11:40:50 UT	+3	10x	
2		11:41:55	+3	10x	
3		11:42:22	+3	10x	
4		11:42:59	+3	10x	
5		11:43:37	+3	10x	
6		11:44:13	+3	10x	
7		11:44:51	+3	10x	
8		11:45:29	+3	10x	
9		11:46:06	+3	10x	
10	15h19 +1.4	11:46:43	+3	10x	
11	15h30 +1.6	11:56:41	+3	10x	
12		11:57:55	+3	10x	
13		11:58:33	+3	1x	
14		11:59:10	+3	1x	
15	15h48 +1.4	12:13:29	+3	1x	as ISS passed under it!
16		12:15:58	+3	1x	

I can't identify from geo report on space-track and SkyMap...any ideas...?

Great morning, very clear, steady sky, just 18d old moon

Brad Young
+36.154, -95.993, 650ft MSL
Tulsa, OK USA

++

http://www.satobs.org/seesat/Mar-2005/0279.html

Re: Another LES-8 (76-23A) sighting
From: Allen Thomson (thomsona@flash.net)
Date: Sun Mar 27 2005 - 13:14:41 EST

Ed Cannon said,

> Those images do leave one wondering how it could be
> bright enough to be seen without magnification from
> geosynchronous range. It and LES-9 were powered by
> radioactive packages and have no solar panels.

Also, note http://tinyurl.com/6qegp :

"The MIT Lincoln Laboratory is involved in a program to demonstrate the technology necessary to deploy a highly survivable satellite communication system for command and control of the SIOP forces. The effort is based upon the use of two satellites (LES-8 and LES-9) carefully designed (both electronically and physically) so that detection of the satellite presence is extremely difficult."

The passage quoted came out in mid-1971, well before the actual launch of LES-8/9 in March 1976, so some of the design requirements may have changed. OTOH, if the optical signature control expriment did indeed depend on the rumored plane mirror, orientation of the satellite would be critical, and likely cease to be possible once control of the satellite was lost.

This is why I think it would be useful for someone to get a set of light curves for LES-8: If it does have a big mirror on it and is tumbling, then there should be both high, sharp maxima and deep minima.

++

http://www.satobs.org/seesat/Mar-2005/0280.html

LES 8 message from Brad Young
From: Kevin Fetter (kfetter@yahoo.com)
Date: Sun Mar 27 2005 - 20:46:56 EST

Brad asked me to post this for him.

I might mention that a different observation of LES-8 (03/11/05 in the evening sky, like the gentleman in Texas) was verified by a man I know only as "Troy" with 10x50 binocs after I pointed it out, and I believe Jerry Mullenuix saw it too behind us at 1X. Troy is recently on leave from Afghanistan and had developed a taste for observation there but is inexperienced, Jerry has been cursing satellites for years as an avid astrophotographer. My wife once saw what I can only think was PCSat (2001-043-C, 26931) one night and described it's track and timing so well I cannot reconcile the fact that she should not have been able to see such a small satellite with the apparent evidence that she did.

Brad

++

http://www.satobs.org/seesat/Oct-2006/0003.html

LES 8 spectacular and very bright geosat AMC-16
From: Ed Cannon (edcannonsat@yahoo.com)
Date: Sun Oct 01 2006 - 19:46:21 EDT

Last night by accident I saw a very bright flash (no binoculars). We waited and waited, and 3 minutes and 13.5 seconds later it flashedagain -- very bright. This was not long after 10:00 PM local time (3:00 UTC). It was LES 8 (73-023A, 08746). It very very gradually got fainter over the next hour (?) -- don't know when it started. This was very easy to see without magnification.

[deletia]

++

http://www.satobs.org/seesat/Oct-2006/0021.html

RE: LES 8 spectacular and very bright geosat AMC-16
From: Brad Young (brad.young@domain-engineering.com)
Date: Wed Oct 04 2006 - 13:57:50 EDT

Ed Cannon said:

>Last night by accident I saw a very bright flash (no binoculars).
>This was not long after 10:00 PM

>local time (3:00 UTC). It was LES 8 (73-023A, 08746).

I had no luck with this one from Tulsa, tried till 10:15 local time.

[deletia]

++

http://www.satobs.org/seesat/Oct-2006/0023.html

Re: LES 8 spectacular and very bright geosat AMC-16
From: Mike McCants (mmccants@io.com)
Date: Wed Oct 04 2006 - 16:59:46 EDT

Ed will not return until tomorrow.

Brad Young posted:

>I had no luck with this one from Tulsa, tried till 10:15 local time.

Ed first spotted LES 8 about 1:55 UT Oct 1 (8:55 CDT Sep 30). We watched it for nearly an hour and it had faded from magnitude 2 down to only about magnitude 5.5.

Since it was visible for such a long time, I would assume that the rotation axis was causing the flashes to go in an east/west direction. If so, its flashes might be visible only much earlier or later from your latitude. Or perhaps not at all.

The flash period on Oct 1 was about 193.5 seconds, but when we spotted it again on Oct 3, the flash period had increased to 198.5 seconds.

[deletia]

++

http://www.satobs.org/seesat/Oct-2006/0040.html

LES 8 last night
From: Ed Cannon (edcannonsat@yahoo.com)
Date: Sat Oct 07 2006 - 18:03:57 EDT

From the Ney Museum grounds I saw four or possibly five flashes from LES 8 (73-023A, 08746) without binoculars, beginning at 2:11:32 UTC. They were at intervals of about 3 minutes, 29.5 seconds -- a flash period 16 seconds slower than six nights ago. And the episode was -- very roughly -- about an hour earlier than October 1. The last flash that I saw with my 8x binoculars was at 2:49:57. When I first saw it, it was a few degrees southeast of Altair, roughly 20 hours RA, Dec +5, roughly.

[deletia]

++