Rancho Seco

Independent Spent Fuel Storage Installation

Final Safety Analysis Report
Volume II
HSM Storage

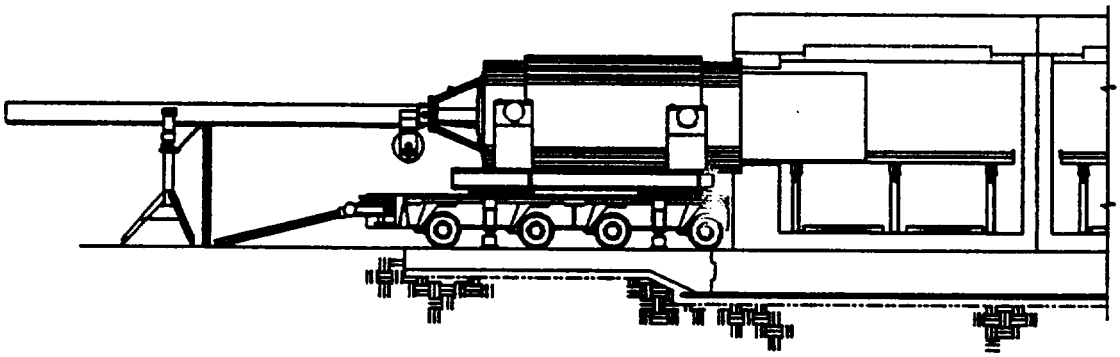

SMUD
Sacramento Municipal Utility District

TABLE OF CONTENTS

		Page
1.	Introduction and General Description of Installation	1.1-1
2.	Site Characteristics	2.1-1
3.	Principal Design Criteria	3.1-1
3.1	Purpose of Installation	3.1-1
3.1.1	Material to be Stored	3.1-1
3.1.2	General Operating Functions	3.1-1
3.2	Structural and Mechanical Safety Criteria	3.2-1
3.2.1	Tornado and Wind Loadings	3.2-1
3.2.2	Water Level (Flood) Design	3.2-1
3.2.3	Seismic Design Criteria	3.2-1
3.2.4	Snow and Ice Loads	3.2-1
3.2.5	Load Combination Criteria	3.2-1
3.2.5.1	Horizontal Storage Module	3.2-1
3.2.5.2	Dry Shielded Canister	3.2-2
3.3	Safety Protection System	3.3-1
3.4	Classification of Structures, Components, and Systems	3.4-1
3.5	Decommissioning Considerations	3.5-1
3.6	Summary of HSM-Unique Design Criteria	3.6-1
3.7	References	3.7-1
4.	Installation Design	4.1-1
4.1	References	4.1-1
5.	Operation Systems	5.1-1
5.1	Operation Description	5.1-1
5.1.1	Narrative Description	5.1-1
5.1.2	Process Flow Diagrams	5.1-1
5.1.3	Identification of Subjects for Safety Analysis	5.1-1
5.1.3.1	Criticality Control	5.1-1
5.1.3.2	Chemical Safety	5.1-1
5.1.3.3	Operation Shutdown Modes	5.1-1
5.1.3.4	Instrumentation	5.1-2
5.1.3.5	Maintenance Techniques	5.1-2
5.2	Fuel Handling Systems	5.2-1
5.2.1	Spent Fuel Handling and Transfer	5.2-1
5.2.1.1	Function Description	5.2-1
5.2.1.2	Safety Features	5.2-2

TABLE OF CONTENTS

		Page
	5.2.2 Spent Fuel Storage	5.2-2
	5.2.2.1 Safety Features	5.2-3
5.3	Other Operating Systems	5.3-1
	5.3.1 Operating System	5.3-1
	5.3.2 Component/Equipment Spares	5.3-1
5.4	Operation Support System	5.4-1
	5.4.1 Instrumentation and Control Systems	5.4-1
	5.4.2 System and Component Spares	5.4-1
5.5	Control Room and/or Control Areas	5.5-1
5.6	Analytical Sampling	5.6-1
5.7	References	5.7-1
6.	Waste Confinement and Management	6.1-1
7.	Radiation Protection	7.1-1
7.1	Ensuring that Occupational Radiation Exposures Are As Low As Is Reasonably Achievable (ALARA)	7.1-1
	7.1.1 Policy Considerations	7.1-1
	7.1.2 Design Considerations	7.1-1
	7.1.3 Operational Considerations	7.1-2
7.2	Radiation Sources	7.2-1
	7.2.1 Characterization of Sources	7.2-1
	7.2.2 Airborne Radioactive Material Sources	7.2-1
7.3	Radiation Protection Design Features	7.3-1
	7.3.1 Installation Design Features	7.3-1
	7.3.2 Shielding	7.3-1
	7.3.2.1 Radiation Shielding Design Features	7.3-1
	7.3.2.2 Shielding Analysis	7.3-2
	7.3.3 Ventilation	7.3-2
	7.3.4 Area Radiation and Airborne Radioactivity Monitoring Instrumentation	7.3-3
7.4	Estimated Onsite Collective Dose Assessment	7.4-1
	7.4.1 Operational Dose Assessment	7.4-1
	7.4.2 Site Dose Assessment	7.4-1
7.5	Health Physics Program	7.5-1
	7.5.1 Organization	7.5-1
	7.5.2 Equipment, Instrumentation, and Facilities	7.5-1
	7.5.3 Procedures	7.5-1
7.6	Estimated Offsite Collective Dose Assessment	7.6-1

TABLE OF CONTENTS

		Page
7.6.1	Effluent and Environmental Monitoring Program	7.6-1
7.6.2	Analysis of Multiple Contribution	7.6-1
7.6.3	Estimated Dose Equivalents	7.6-1
7.6.4	Liquid Release	7.6-1
7.7	References	7.7-1
8.	Analysis of HSM Storage Design Events	8.1-1
8.1	Normal HSM Storage Operations	8.1-1
8.1.1	Thermal Analysis	8.1-1
	8.1.1.1 HSM Thermal Analysis	8.1-1
	8.1.1.2 Thermal Analysis of the FO-DSC, FC-DSC, or FF-DSC Inside the HSM	8.1-4
8.1.2	Normal HSM Storage Criticality Analysis	8.1-6
8.1.3	Normal HSM Storage Shielding Analysis	8.1-6
8.1.4	Normal HSM Storage Structural Analysis	8.1-6
	8.1.4.1 Dead Weight Loads	8.1-7
	8.1.4.2 Design Basis Internal Pressure	8.1-8
	8.1.4.3 Design Basis Thermal Loads	8.1-8
	8.1.4.4 Operational Handling Loads	8.1-9
	8.1.4.5 Design Basis Live Loads	8.1-9
	8.1.4.6 HSM Concrete Creep and Shrinkage Analysis	8.1-9
	8.1.4.7 Radiation Effects on HSM Concrete	8.1-9
	8.1.4.8 HSM Design Analysis	8.1-9
	8.1.4.9 HSM Door Analysis	8.1-10
	8.1.4.10HSM Heat Shield Analysis	8.1-10
	8.1.4.11HSM Axial Retainer for DSC	8.1-10
	8.1.4.12FO-DSC, FC-DSC, and FF-DSC Fatigue Evaluation	8.1-10
8.2	Off-Normal HSM Storage Events	8.2-1
8.2.1	Off-Normal Internal Pressure Analysis	8.2-1
8.2.2	Off-Normal Thermal Loads Analysis	8.2-1
8.3	HSM Storage Accident Analysis	8.3-1
8.3.1	Tornado Winds and Missiles	8.3-1
8.3.2	Earthquake	8.3-1
	8.3.2.1 HSM Seismic Evaluation	8.3-2
	8.3.2.2 FO-DSC, FC-DSC, and FF-DSC Seismic Evaluation	8.3-2
	8.3.2.3 DSC Support Structure Seismic Evaluation	8.3-2
8.3.3	Flood	8.3-2
	8.3.3.1 HSM Flooding Analysis	8.3-2
	8.3.3.2 FO-DSC, FC-DSC, and FF-DSC Flooding Analyses	8.3-3
8.3.4	Lightning	8.3-3
8.3.5	Complete Blockage of HSM Air Inlet and Outlet Vents	8.3-3
8.3.6	Reduced HSM Air Inlet and Outlet Shielding	8.3-4

TABLE OF CONTENTS

			Page
		8.3.7 Snow and Ice Loads	8.3-4
		8.3.8 Fire and Explosion	8.3-4
	8.4	Load Combinations	8.4-1
		8.4.1 HSM Load Combination Evaluation	8.4-1
		8.4.2 DSC Load Combination Evaluation	8.4-1
		8.4.3 DSC Support Structure Load Combination Evaluation	8.4-1
	8.5	Summary of Design Requirements	8.5-1
	8.6	Site Characteristics Affecting Safety Analysis	8.6-1
	8.7	References	8.7-1
9.	Conduct of Operations		9.1-1
10.	Operating Controls and Limits		10.1-1
	10.1	Proposed Operating Controls and Limits	10.1-1
	10.2	Development of Operating Controls and Limits	10.2-1
		10.2.1 Functional and Operating Limits, Monitoring Instruments, and Limiting Control Settings	10.2-1
		10.2.2 Limiting Conditions for Operation	10.2-1
		10.2.2.1Equipment	10.2-1
		10.2.2.2Technical Conditions and Characteristics	10.2-1
		10.2.3 Surveillance Requirements	10.2-2
		10.2.4 Design Features	10.2-2
		10.2.5 Administrative Controls	10.2-3
	10.3	Operating Control and Limit Specifications	10.3-1
		10.3.1 HSM Air Exit Temperature	10.3-1
		10.3.2 Surveillance of the HSM Air Vents	10.3-2
		10.3.3 Surveillance of HSM Thermal Performance	10.3-3
	10.4	References	10.4-1
11.	Quality Assurance		11.1-1

LIST OF TABLES

Table 3-1 Horizontal Storage Module Storage Design Loadings

Table 3-2 Horizontal Storage Module Design Loadings

Table 3-3 HSM Ultimate Strength Reduction Factors

Table 3-4 HSM Load Combination Methodology

Table 3-5 DSC Load Combinations and Service Levels

Table 3-6 DSC Support Structure Load Combination Methodology

Table 3-7 Structural Design Criteria for DSC

Table 3-8 Structural Design Criteria for DSC Support Structure

Table 5-1 Instrumentation Used During NUHOMS® System Loading Operations

Table 7-1 Rancho Seco HSM Surface Dose Rates [7.3]

Table 8-1 Solar Insolation and Ambient Temperatures at Rancho Seco ISFSI

Table 8-2 Solar Insolation and Ambient Temperature Comparison

Table 8-3 Effect of Solar Heat Flux

Table 8-4 HSM Thermal Analysis Results Summary

Table 8-5 DSC Thermal Analysis Results Summary

Table 8-6 Normal Operating Loading Identification

Table 8-7 Off-Normal Operating Loading Identification

Table 8-8 Postulated Accident Loading Identification

Table 8-9 FO-DSC Normal/Off-Normal HSM Storage Condition Stress Results

Table 8-10 FC-DSC Normal/Off-Normal HSM Storage Condition Stress Results

Table 8-11 FF-DSC Normal/Off-Normal HSM Storage Condition Stress Results

Table 8-12 Control Component Material and Decay Heat

Table 8-13 Maximum HSM Reinforced Concrete Bending Moments and Shear Forces for Normal and Off-normal Loads

LIST OF TABLES

Table 8-14 Maximum HSM Reinforced Concrete Bending Moments and Shear Forces for Accident Loads
Table 8-15 HSM Enveloping Load Combination Results
Table 8-16 DSC Support Structure Enveloping Load Combination Results
Table 8-17 DSC Support Structure Enveloping Load Combination Results Support Member End Connection Loads

Table 10-1 Areas Where Controls and Limits Are Specified

LIST OF FIGURES

Figure 5-1 DSC Loading Operations Flow Chart

Figure 5-2 DSC Retrieval Operations Flow Chart

Figure 5-3 Primary Operations for DSC Transfer

Figure 5-4 Cask/HSM Alignment Verification

Figure 7-1 HSM Surfaces Used in Average Dose Rate Calculation

1. INTRODUCTION AND GENERAL DESCRIPTION OF INSTALLATION

This Volume describes spent fuel storage in Horizontal Storage Modules (HSMs) at the Rancho Seco ISFSI. An overview of the ISFSI, and of the HSMs, is provided in Volume I, Chapter 1.

2. SITE CHARACTERISTICS

Volume I, Chapter 2 provides a description of the Rancho Seco ISFSI site.

3. PRINCIPAL DESIGN CRITERIA

This Section describes the principal design criteria which are unique to HSM storage at the Rancho Seco ISFSI. The design criteria for the ISFSI site were presented in Chapter 3 of Volume I.

3.1 Purpose of Installation

3.1.1 Material to be Stored

Each HSM can store one Rancho Seco DSC of any type.

3.1.2 General Operating Functions

The Rancho Seco HSM operating functions are similar to those of the Standardized NUHOMS®-24P System as provided in the Standardized NUHOMS® SAR [3.3.1].

3.2 Structural and Mechanical Safety Criteria

Table 3-1 summarizes the design criteria for the Rancho Seco ISFSI components which are important to safety for the storage mode in the HSM. A description of the structural and mechanical safety criteria for the other design loadings listed in Table 3-1, such as thermal loads, are provided in Chapter 8.

3.2.1 Tornado and Wind Loadings

The Rancho Seco ISFSI tornado and wind loadings are discussed in Volume I, Section 3.2.1 and summarized in Table 3-1.

3.2.2 Water Level (Flood) Design

The Rancho Seco ISFSI flood event is discussed in Volume I, Section 3.2.2 and summarized in Table 3-1.

3.2.3 Seismic Design Criteria

The Rancho Seco ISFSI seismic design criteria are discussed in Volume I, Section 3.2.3 and summarized in Table 3-1.

3.2.4 Snow and Ice Loads

The Rancho Seco ISFSI snow and ice loads are discussed in Volume I, Section 3.2.4 and summarized in Table 3-1.

3.2.5 Load Combination Criteria

3.2.5.1 Horizontal Storage Module

The design approach, design criteria and loading combinations for which the Rancho Seco reinforced concrete HSM is designed are similar to those specified in Section 3.2.5.1 of the Standardized NUHOMS® SAR [3.3.1]. The HSM design criteria and load combinations are summarized in Table 3-1 and Table 3-4. The design loading for the DSC and its support structure are summarized in Table 3-2. Load combinations for the DSC support structure are summarized in Table 3-6. Allowables for the DSC and support structure are tabulated in Volume I, Table 3-7 and Volume II, Table 3-8. The HSM load combination results are presented in Section 8.4.1. The DSC support structure load combination results are presented in Section 8.4.3.

The reinforced concrete HSM is designed to meet the requirements of ACI 349-85 [3.3.3]. The ultimate strength method of analysis is utilized with the appropriate strength reduction factors as described in Table 3-3. The load combinations specified in Section 6.17.3.1 of ANSI 57.9-1984 are used for combining normal operating, off-normal, and accident loads for the HSM. All seven load combinations specified are

considered and the governing combinations are selected for detailed design and analysis. The resulting HSM load combinations and the appropriate load factors are presented in Table 3-4. The effects of duty cycle on the HSM are considered and found to have negligible effect on the design. The corresponding structural design criteria for the DSC support structure are summarized in Table 3-6 and Table 3-8. The HSM load combination results are presented in Section 8.2.10 of the Standardized NUHOMS® SAR [3.3.1].

3.2.5.2 Dry Shielded Canister

The FO-, FC- and FF-DSCs are all designed using a similar design approach, design criteria and load combinations for the primary storage mode as those specified in the Standardized NUHOMS® SAR [3.3.1]. The DSC design criteria and load combinations are summarized in Volume I, Table 3-6 and Table 3-7. The DSC load combination results for the HSM storage mode are presented in Section 8.4.2. The effects of fatigue on the DSCs due to thermal cycling are addressed in Volume I, Section 8.1.1.7.

The DSC is designed by analysis to meet the stress intensity allowables of the ASME Boiler and Pressure Vessel Code (1992 Code, 1993 Addendum), Section III, Division 1, Subsection NB, NF, and for Class 1 components and supports. The DSC is conservatively designed by using linear elastic or non-linear elastic-plastic analysis methods. The load combinations considered for the DSC normal, off-normal and postulated accident loadings are shown in Table 3-5. ASME Code Service Levels A and B allowables are conservatively used for normal and off-normal operating conditions. Service Levels C and D allowables are used for accident conditions such as a postulated cask drop accident. Using these acceptance criteria ensures that in the event of a design basis drop accident, the DSC containment pressure boundary is not breached. As indicated by the results of the analysis of Section 8.2.5 of the Standardized NUHOMS® SAR [3.3.1], the amount of deformation sustained by the spacer disks does not inhibit retrieval of the fuel assemblies. The maximum shear stress theory is used to calculate principal stresses. Normal operational stresses are combined with the appropriate off-normal and accident stresses. It is assumed that only one postulated accident condition occurs at any one time. The accident analyses are documented in Section 8.2. The structural design criteria for the DSC are summarized in Volume I, Table 3-7. The effects of fatigue on the DSC due to thermal and pressure cycling are addressed in Section 8.2.10 of the Standardized NUHOMS® SAR [3.3.1].

The DSC support structure load combination methodology, and support structure design criteria are summarized in Table 3-6 and Table 3-8.

3.3 Safety Protection System

The Rancho Seco HSM design is similar to the Standardized NUHOMS®-24P HSM design. Refer to Section 3.3 in the Standardized NUHOMS® SAR [3.3.1] for a discussion of the HSM safety protection system.

See Appendix B for Standardized SAR, Section 3.3 (pages 3.3-1 to 3.3-75).

3.4 Classification of Structures, Components, and Systems

Refer to Volume I, Section 3.4 and Table 3-11.

3.5 Decommissioning Considerations

Refer to Volume I, Section 3.5.

3.6 Summary of HSM-Unique Design Criteria

In addition to the Rancho Seco ISFSI design criteria, the HSMs are designed to:

1. Store one Rancho Seco DSC of any type.

2. Comply with the criteria specified in ACI 349 [3.3.3], or as an alternate, comply with the following temperature requirements:

   a) If concrete temperatures of general or local areas do not exceed 200°F in normal or off normal conditions/occurrences, no tests or reduction of concrete strength are required.

   b) If concrete temperatures of general or local areas exceed 200°F but would not exceed 300°F, no tests or reduction of concrete strength are required if Type II cement is used and aggregates are selected which are acceptable for concrete in this temperature range. The following fine and course aggregates are considered acceptable:

      i. Satisfy ASTM C33 requirements and other requirements as referenced in ACI 349 for aggregates.

      ii. A demonstrated coefficient of thermal expansion (tangent in temperature range of 70°F to 100°F) not greater than $6x10^{-6}$ in/in-°F or be one of the following minerals: limestone, Dolomite, marble, basalt, granite, gabbro or rhyolite.

3. The above criteria in lieu of the ACI 349 requirements do not extend above 300°F for normal or off-normal temperatures for general or local areas and do not modify the ACI requirements for accident situations. The use of any Portland cement concrete where normal or off-normal temperatures of general or local areas may exceed 300°F or "accident" temperatures may exceed 350°F requires testing of the exact concrete mix (cement type, additives, water/cement ratios, aggregates, proportions) which are used. The tests are to acceptably demonstrate the level of strength reduction which needs to be applied, and to show that the increased temperatures do not cause deterioration of the concrete either with or without load.

4. An exception to ACI 349 and the NRC staff modified criteria described above is acceptable based on independent NRC staff analyses and the relatively low (approximately 220°F) elevated temperature which might be experienced in off-normal conditions is as follows. This exception is not general acceptance for ISFSI usage for any normal temperatures exceeding 200°F or any off-normal temperatures exceeding 225°F.

a) Fine aggregates composed of quartz sand, sandstone sands, or any sands of the following minerals: limestone, dolomite, marble, basalt, granite, gabbro or rhyolite, or any mixture of these may be used without further documentation as to the coefficient of thermal expansion.

b) Fine aggregates must satisfy the requirements of ASTM C33 and ACI 349, and of the documents incorporated in those by reference.

3.7 References

3.1 "Safety Analysis Report for the Standardized NUHOMS® Horizontal Modular Storage System for Irradiated Nuclear Fuel," NUH-003, Revision 4A, VECTRA Technologies, Inc., June 1996.

3.2 American Institute of Steel Construction (AISC), "Specification for Structural Steel Buildings," 1989, Chicago, Illinois.

3.3 American Concrete Institute (ACI), "Code Requirements for Nuclear Safety Related Concrete Structures and Commentary," ACI 349-85 and ACI 349R-85, 1985.

3.4 American National Standards Institute (ANSI), "Design Criteria for an Independent Spent Fuel Storage Installation (Dry Storage Type)," ANSI/ANS-57.9-1984.

Table 3-1

Horizontal Storage Module Design Loadings

Component	Design Load Type	SAR Section Reference	Design Parameter
Horizontal Storage Module	Design Basis Tornado and Wind	0	Maximum wind pressure: 397 psf
	DBT Missile	0	Missile Types Automobile: Weight = 3967 lbs. Area = 20 ft^2 Velocity = 126 mph Penetration Resistant Missile Weight = 276 lbs. Diameter = 8.0 in. Velocity = 126 mph Barrier Impingement Missile solid steel sphere Diameter = 1.0 in. Velocity = 126 mph
	Flood	0	Maximum water height: 50 feet Maximum water velocity: 15 fps
	Seismic	0	Peak Ground Accelerations: Horizontal: 0.25g (both directions) Vertical: 0.17g
	Snow and Ice	0	Maximum Load: 110 psf (included in live loads)
	Dead Loads	8.1.1.5	Dead weight including loaded DSC
	Normal and Off-normal Operating Temperature	8.1.1.5	Ambient air temperature range of -20°F to 117°F.
	Accident Condition Temperature	8.2.7.2	Off-normal conditions with HSM vents blocked for maximum of 40 hours
	Normal Handling Loads	8.1.1.1	Hydraulic ram load of 60,000 lbs.
	Off-normal Handling Loads	8.1.1.4	Hydraulic ram load of 80,000 lbs.
	Live Loads	8.1.1.5	Maximum Load: 200 psf (includes snow and ice loads)
	Fire and Explosions	3.3.6	Enveloped by other design basis events

Table 3-2

Horizontal Storage Module Design Loadings

Component	Design Load Type	SAR Section Reference	Design Parameter
HSM Dry Shielded Canister Support Structure	Dead Weight	8.1.4.1	Loaded DSC plus self weight
	Seismic	0	DSC reaction loads with horizontal peak ground acceleration of 0.25g and vertical peak ground acceleration of 0.17g
	Normal Handling Loads	8.1.4.4	DSC reaction loads with hydraulic ram load of 60,000 lb.
	Off-normal Handling Loads	8.1.4.4	DSC reaction loads with hydraulic ram load of 80,000 lb.
Dry Shielded Canister	Flood	0	Maximum water height: 50 ft.
	Seismic	0	Peak Ground Accelerations: Horizontal: 0.25g (both directions) Vertical: 0.17g
	Dead Loads	8.1. 4.1	Weight of horizontal loaded DSC supported by DSC support structure rails
	Normal and Off-Normal Pressure	8.1.4.2	Maximum Internal Pressure: Normal Conditions: 10 psig Off-Normal Conditions: 10 psig
	Normal and Off-Normal Operating Temperature	8.1.1.1	Bounding ambient air temperature range of -20°F to 117°F
	Accident Internal Pressure	8.1.4.2	Enveloping internal pressure of 50 psig based on 100% fuel cladding rupture and fill gas release, 30% fission gas release, bounding ambient air temperature of 117°F, and blocked HSM vents.

Table 3-3

HSM Ultimate Strength Reduction Factors

Type of Stress	Reduction Factor
Flexure	0.9
Axial Tension	0.9
Axial Compression	0.7
Shear	0.85
Torsion	0.85
Bearing	0.7

Table 3-4

HSM Load Combination Methodology

Case Number	Load Combination[1]
1	1.4D + 1.7L
2	1.4D + 1.7L + 1.7H
3	0.75 (1.4D + 1.7L + 1.7H + 1.7T + 1.7W)
4	0.75 (1.4D + 1.7L + 1.7H + 1.7T)
5	D + L + H + T + E
6[1]	D + L + H + T + F
7	D + L + H + T_a

Notation:

D = Dead Weight[2][3]
E = Earthquake Load
F = Flood Induced Loads
H = Lateral Soil Pressure Load
L = Live Load[4]
T = Normal Condition Thermal Load
T_a = Off-Normal or Accident Condition Thermal Load
W = Wind Load[5]

Notes:

1. The HSM load combinations are in accordance with ANSI-57.9 [3.3.4]. In Case 6 flood loads (F) are substituted for drop loads (A) which are not applicable to the HSM.

2. The effects of creep and shrinkage are included in the dead weight load for Cases 3 through 8.

3. Dead loads (D) are increased +5% to simulate most adverse loading.

4. Live loads (L) are varied between 0 and 100% of design load to simulate most adverse conditions for the HSM.

5. Wind loads are conservatively taken as Design Basis Tornado (DBT) loads. These include wind pressure, differential pressure, and missile loads. Case 3 is first satisfied without the tornado missile load. Missile loads are analyzed for local damage, overall damage, overturning and sliding effects.

Table 3-5

DSC Load Combinations and Service Levels

Load Case		Normal Operating Conditions	Off-Normal Operating Conditions	Accident Conditions				
Dead Weight	Horizontal, DSC w/Fuel	X	X	X	X	X	X	X
Thermal	Inside HSM: 0° to 101°F	X		X	X			
	Inside HSM: -20° to 117°F		X			X		
	Inside HSM: 117°F						X	
	Inside HSM: Blocked Vents							X
Flood				X				
Seismic					X			
Internal Pressure	Normal Pressure	X		X				
	Off-Normal Pressure		X					
	Accident Pressure				X(1)	X(1)	X(1)	X
ASME Code Service Level		A	B	C	C	C	C	D
Load Combination No.		A1	B1	C1	C2	C3	C4	D1

Notes:

1. Accident pressure of 41 psi for Service Level C condition is applied to inner cover plates. Accident pressure of 50 psi on the outer cover plates is evaluated for Service Level D allowables.

Table 3-6

DSC Support Structure Load Combination Methodology

Allowable Stress (S)	
Case Number	Load Combination[1]
1	$S > D + L$
2	$S > D + L + H$
3	$1.33S > D + L + H + W$
4	$1.5S > D + L + H + T + W$
5	$1.6S > D + L + H + T + E$
6	$1.33S > D + L + H + T$
7	$1.7S > D + L + H + T_a$

Notation:

D = Dead Weight[2]
E = Earthquake Load
H = Lateral Soil Pressure Load
L = Live Load[3]
T = Normal Condition Thermal Load
T_a = Off-Normal or Accident Condition Thermal Load
W = Wind Load[4]

Notes:

1. Load combinations are per ANSI 57.9 except lateral soil pressure (H = 0) and drop loads (A = 0).

2. Dead load (D) includes weight of loaded DSC and is increased +5% to simulate most adverse loading.

3. Live load is equal to normal DSC handling loads for Cases 1 through 5. For Case 6, L is equal to off normal jammed DSC loads. For Case 7 L = 0 L is varied 0 - 100% to obtain critical section.

4. Wind loads are not applicable to the DSC support structure which is located inside the HSM.

Table 3-7

Structural Design Criteria for DSC

(Refer to Volume I, Table 3-7)

Table 3-8

Structural Design Criteria for DSC Support Structure

Allowable Stress (S)	
Stress Type	Stress Value
Tensile	0.60 S_y (1)
Compressive	(See Note 2)
Bending	0.60 S_y (3)
Shear	0.40 S_y (4)
Interaction	(See Note 5)

Notes:

1. Values of S_y versus temperature are given in Table 8.1-3 of the Standardized NUHOMS® SAR [3.3.1].

2. Equations E2-1 or E2-2 of the AISC specification [3.3.2] are used as appropriate.

3. If the requirements of Paragraph F1.1 of the AISC specification [3.3.2] are met, an allowable bending stress of 0.6 S_y is used.

4. Maximum allowable shear stress for Cases 4 to 7 (Table 3-6) is limited to 1.4S (0.56 S_y).

5. Interaction equations per the AISC specification [3.3.2] are used as appropriate.

4. INSTALLATION DESIGN

See Volume I, Chapter 4 for a description of the Rancho Seco ISFSI design. The design of Rancho Seco HSMs is similar to the Standardized NUHOMS® HSM design. Refer to Chapter 4 of the Standardized NUHOMS® SAR [4.4.1] for a complete description of the HSM.

4.1 References

4.1 "Safety Analysis Report for the Standardized NUHOMS® Horizontal Modular Storage System for Irradiated Nuclear Fuel," NUH-003, Revision 4A, VECTRA Technologies, Inc., June 1996.

5. OPERATION SYSTEMS

This Chapter presents the tasks required for DSC transfer into the HSM, HSM surveillance operations, and DSC retrieval from the HSM. These tasks are based on those given in the Standardized NUHOMS® SAR [5.0] and the MP187 Transportation SAR [5.2]. Operating tasks for DSC loading and closure are provided in Volume I. The NUHOMS® transfer equipment is used to accomplish these operations.

5.1 Operation Description

5.1.1 Narrative Description

The following outlines the types of activities for which operating procedures for DSC transfer and HSM monitoring will be developed.

1. DSC transfer to the HSM
2. Monitoring operations
3. DSC retrieval from the HSM

Flowcharts of DSC transfer operations are provided in Figure 5-1 and Figure 5-2. Loading and alignment operations are illustrated in Figure 5-3 and Figure 5-4. Operations sequence for transferring a loaded DSC from an HSM to a rail car for off-site transportation are provided in Section 7.1.5, 7.1.7 and 7.1.8 of the MP187 Part 71 SAR [5.2].

5.1.2 Process Flow Diagrams

Process flow diagrams for DSC loading into and retrieval from the HSM are presented in Figure 5-1 and Figure 5-2, respectively. Process flow diagrams for placement of a DSC in storage in the cask are presented in Volume III, Section 5.1.2.

5.1.3 Identification of Subjects for Safety Analysis

5.1.3.1 Criticality Control

See Volume I, Section 5.1.3.1.

5.1.3.2 Chemical Safety

See Volume I, Section 5.1.3.2.

5.1.3.3 Operation Shutdown Modes

See Volume I, Section 5.1.3.3.

5.1.3.4 Instrumentation

Table 5-1 shows the typical instruments used to measure conditions or control the operations during the DSC transfer operations. The instruments are standard readily available industry equipment.

5.1.3.5 Maintenance Techniques

See Volume I, Section 5.1.3.5.

5.2 Fuel Handling Systems

5.2.1 Spent Fuel Handling and Transfer

The Rancho Seco ISFSI is designed to use the existing RSNGS systems for handling fuel casks. This section describes the spent fuel handling systems that are unique to NUHOMS® and used during the DSC loading and closure operations.

5.2.1.1 Function Description

Figure 5-3 illustrates the DSC transfer operations.

Transfer System

The transfer system is composed of the cask, lifting yoke, support skid, skid positioning system, transport trailer, hydraulic ram, and auxiliary equipment as described in Volume I, Section 1.3.1. The components of the transfer system used for the operations listed in Section 5.1 are described below. The remaining transfer equipment is described in Volume I.

Cask

During transfer of the DSC to the HSM, the top end of the cask is docked within the HSM docking collar. The ram access port on the bottom of the cask provides an opening through which the hydraulic ram can operate. Descriptions of the cask's design criteria are discussed in Volume III.

Cask Support Skid

See Volume I, Section 5.2.1.1.

Transport Trailer

See Volume I, Section 5.2.1.1.

Optical Survey Equipment

After the loaded trailer has been backed up to the HSM, the cask is aligned with the HSM. Alignment is achieved using a transit level and optical alignment marks on the cask and HSM as shown in Figure 5-4. Once the cask is aligned with the HSM, the trailer jacks and cask restraints insure that alignment is maintained throughout the DSC transfer or retrieval operations.

Jack Support System

See Volume I, Section 5.2.1.1.

Cask Restraints

During the DSC transfer or retrieval operations, the resistance of the DSC could cause the cask to move in its axial direction. This motion could cause the alignment to be altered or shielding by the HSM and cask to be jeopardized. To insure that the cask does not move in the axial direction, cask restraints join the HSM front wall embedments to the cask lifting trunnions.

Ram and Grappling Apparatus

The ram is a hydraulic cylinder which extends from the back of the cask through the length of the cask. The grappling apparatus is mounted on the front of the ram. The grapple hydraulic cylinder actuates the arms causing them to engage the DSC grapple ring. Once the arms are engaged, the ram is extended, pushing the DSC out of the cask and into the HSM. For retrieval of the cask the process is reversed. The DSC slides along the cask inner liner rails and onto the support rails inside the HSM.

DSC Support Rails

During the transfer operation, the DSC slides out of the cask on hard surfaced rails and onto the support rails inside the HSM. The support rails in the HSM serve as both the sliding surfaces during the transfer operation as well as supports during DSC storage. The surface of the support rails which comes in contact with the surface of the DSC is hardened and coated with a lubricant.

5.2.1.2 Safety Features

Except for the transfer of the DSC from the cask to the HSM, the loaded DSC is always seated inside the cask cavity. To ensure that the minimum amount of force is applied to the DSC during the transfer operation, the cask cavity rails and the support rails in the HSM which are in contact with the DSC are coated with a lubricant. A low coefficient of friction minimizes the amount of force applied to the DSC, thus minimizing the possibility of damage to the DSC.

If the motion of the DSC is impeded during the transfer operation and the ram continues to travel, the force exerted by the ram on the DSC will increase. Should such an event occur, the amount of force which the ram may exert is limited by the ram control system and monitored by the operator. The stresses which develop in the DSC due to the maximum loading force are less than the allowable limits of the DSC material and, therefore, the integrity of the canister shell and closure welds is not jeopardized.

For transfer of the DSC from the HSM to a Part 71 transportation ready MP187, the cask and DSC will be handled as described in Section 7.1.5, 7.1.7 and 7.1.8 of Reference [5.2]. The maximum lifted height of the cask is limited to 80 inches above the impacting surface, unless

the impact limiters are installed. Optionally, this lift could be performed with a redundant lifting system, meeting the requirements of ANSI N14.5.

5.2.2 Spent Fuel Storage

Descriptions of the operations used for the transfer and retrieval of the DSC from the HSM are presented in Section 5.1.

5.2.2.1 Safety Features

The features, systems and special techniques which provide for safe loading and retrieval operations are described in Section 5.2.1.2.

5.3 Other Operating Systems

5.3.1 Operating System

NUHOMS® is a passive storage system and requires no operating systems other than those systems used in transferring the DSC to and from the HSM.

5.3.2 Component/Equipment Spares

As discussed in Section 8.2, the Rancho Seco ISFSI is designed to withstand all postulated design basis events. Therefore, no storage component or equipment spares are required for the Rancho Seco ISFSI.

5.4 Operation Support System

NUHOMS® is a self-contained passive system and requires no effluent processing systems during storage conditions.

5.4.1 Instrumentation and Control Systems

To ensure proper heat conduction, the HSM roof concrete temperatures will be monitored. This monitoring system is not important to safety and will consist of thermocouples installed in a thermowell in each HSM roof. This monitoring system will include a non-safety remote readout. The signals will be incorporated into the RSNGS Plant Integrated Computer System (PICS), with a readout in the control room. After RSNGS decommissioning, the signals will be transmitted to the District headquarters located in Sacramento. The temperature indications will also be accessible in the ISFSI Electrical Building.

The instrumentation and controls necessary during DSC loading, closure and transfer are described in Section 5.1.3.4.

5.4.2 System and Component Spares

Spare thermocouples, transducers and indicators will be maintained, as appropriate.

5.5 Control Room and/or Control Areas

There are no control room or control areas for the Rancho Seco ISFSI since there are no control systems. Data from HSM temperature monitoring is available through the Plant Integrated Computer System, with a local readout in the ISFSI Electrical Building.

5.6 Analytical Sampling

There is no analytical sampling required for the Rancho Seco ISFSI.

5.7 References

5.1 "Safety Analysis Report for the Standardized NUHOMS® Horizontal Modular Storage System for Irradiated Nuclear Fuel," NUH-003, Revision 4A, VECTRA Technologies, Inc., June 1996.

5.2 "Safety Analysis Report for the NUHOMS®-MP187 Multi-Purpose Cask," NUH-05-151, Revision 9, Docket 71-9255. Transnuclear West Inc., September 1998.

Table 5-1

Instrumentation Used During NUHOMS® System Loading Operations

Instrument	Function
Hydraulic Pressure Gauges and Ram Pressure Relief Valves	Measure and limit hydraulic ram force applied to DSC.
Optical Survey Equipment	Align cask and ram with HSM.

Figure 5-1

DSC Loading Operations Flow Chart

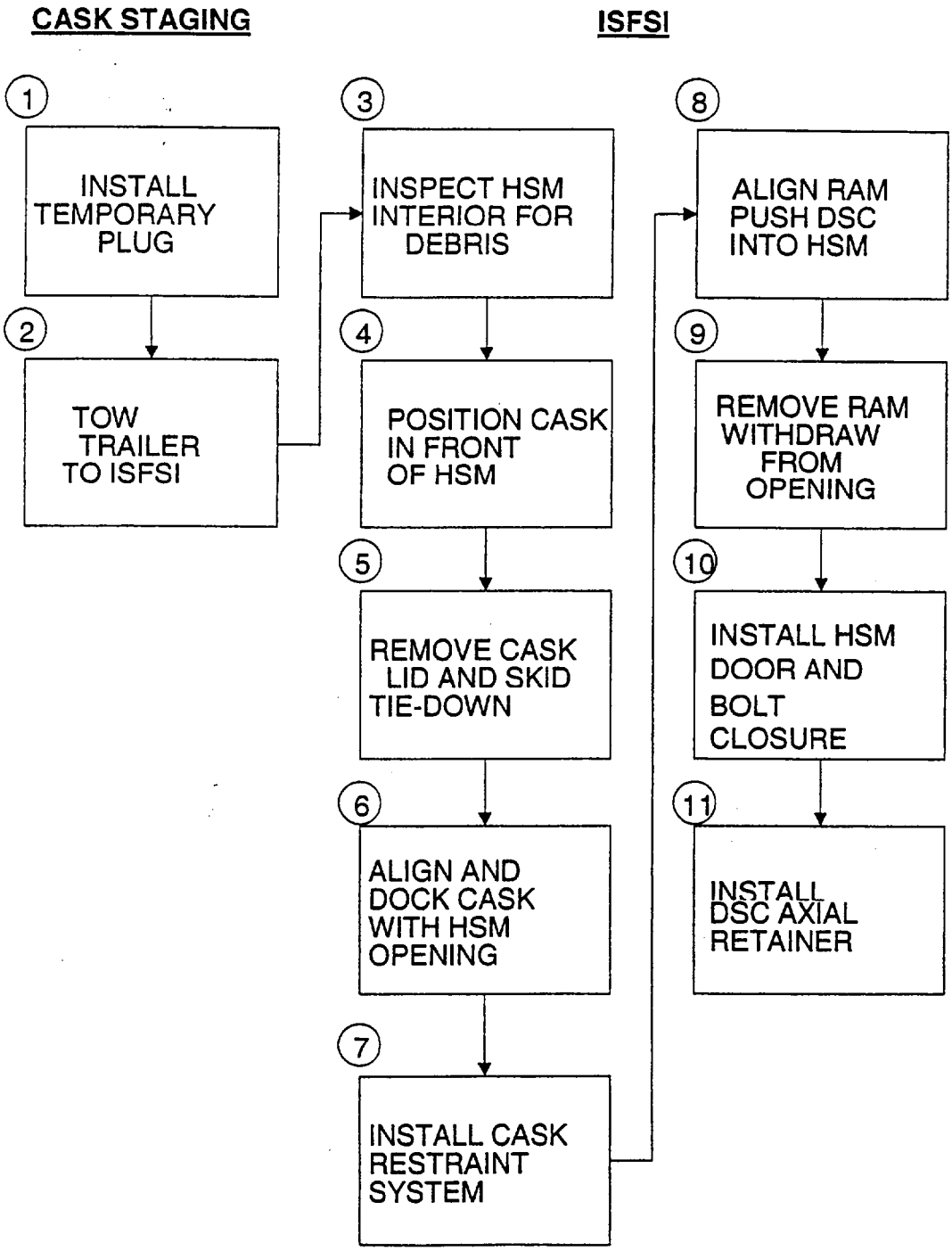

Figure 5-2

DSC Retrieval Operations Flow Chart

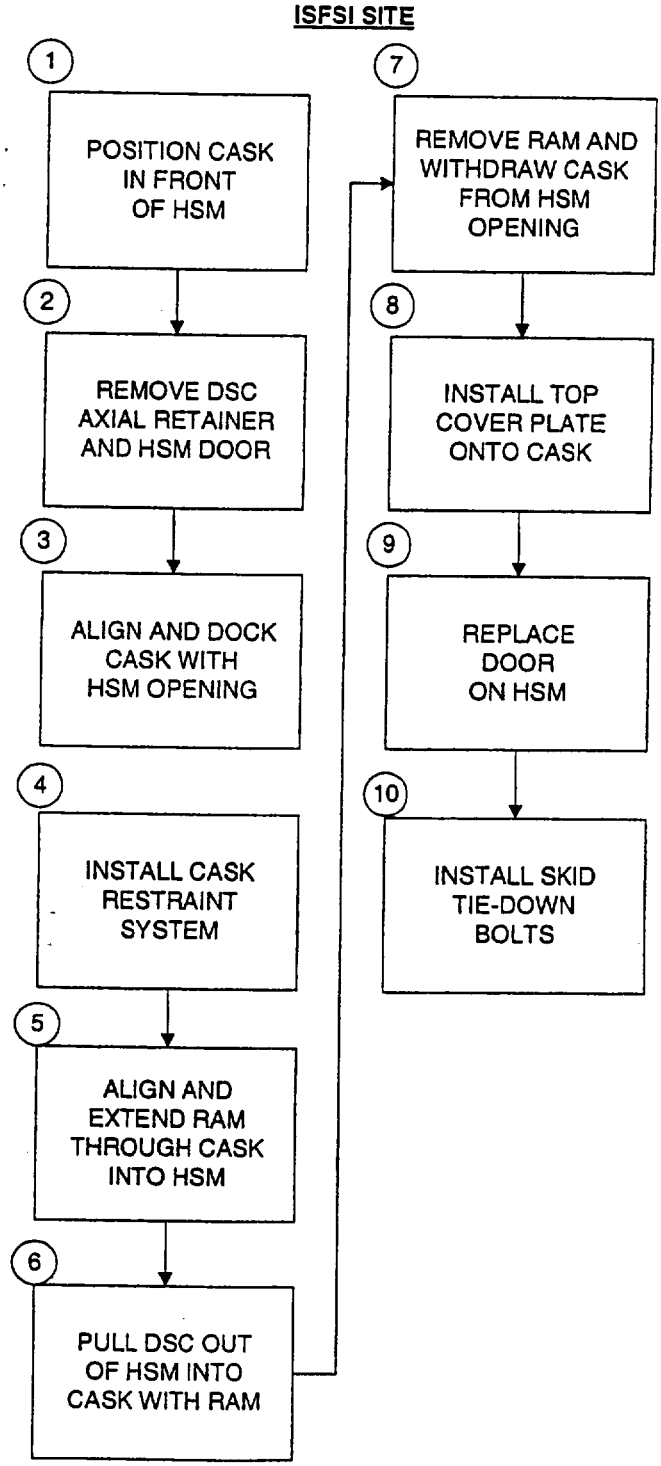

Figure 5-3

Primary Operations for DSC Transfer

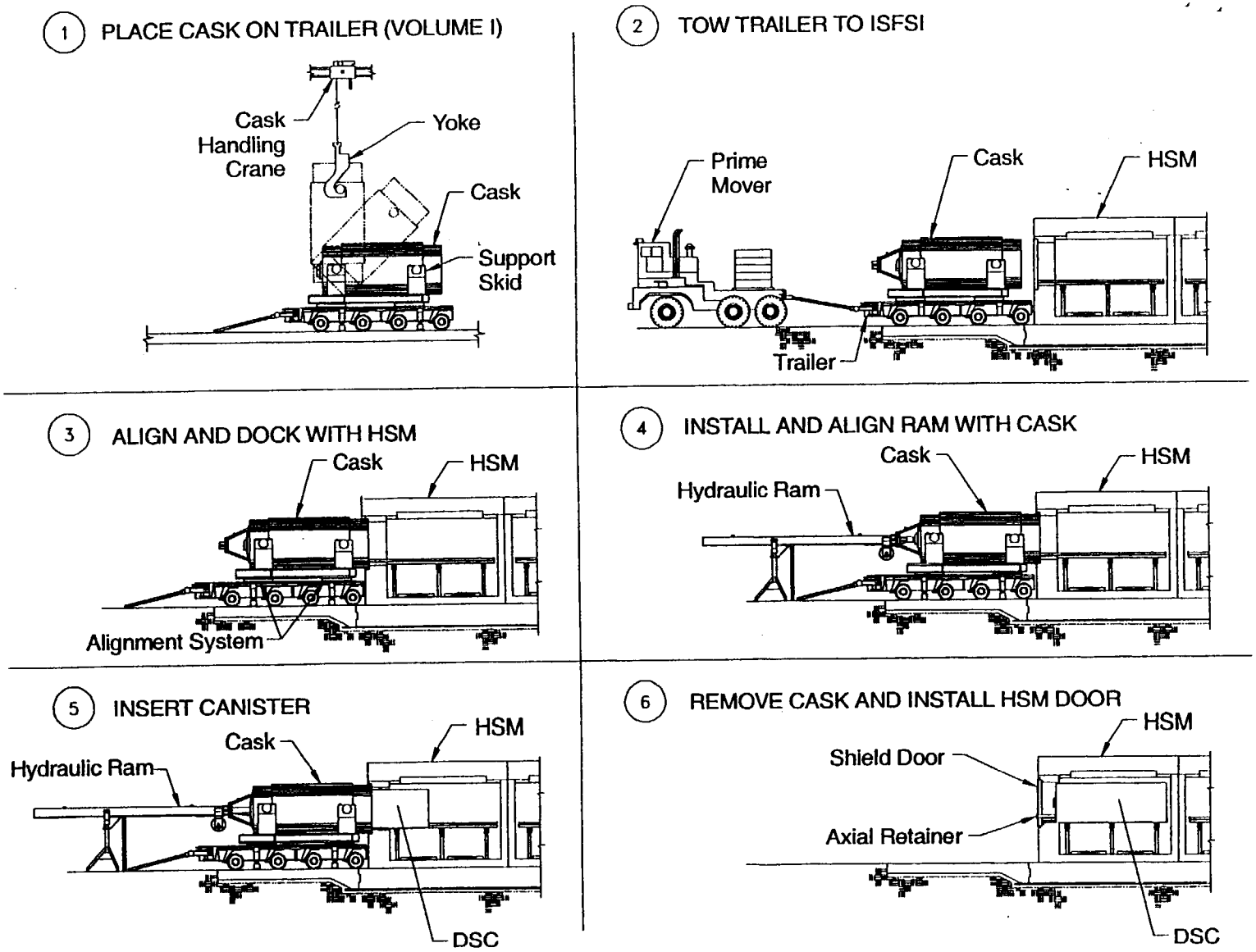

Figure 5-4

Cask/HSM Alignment Verification

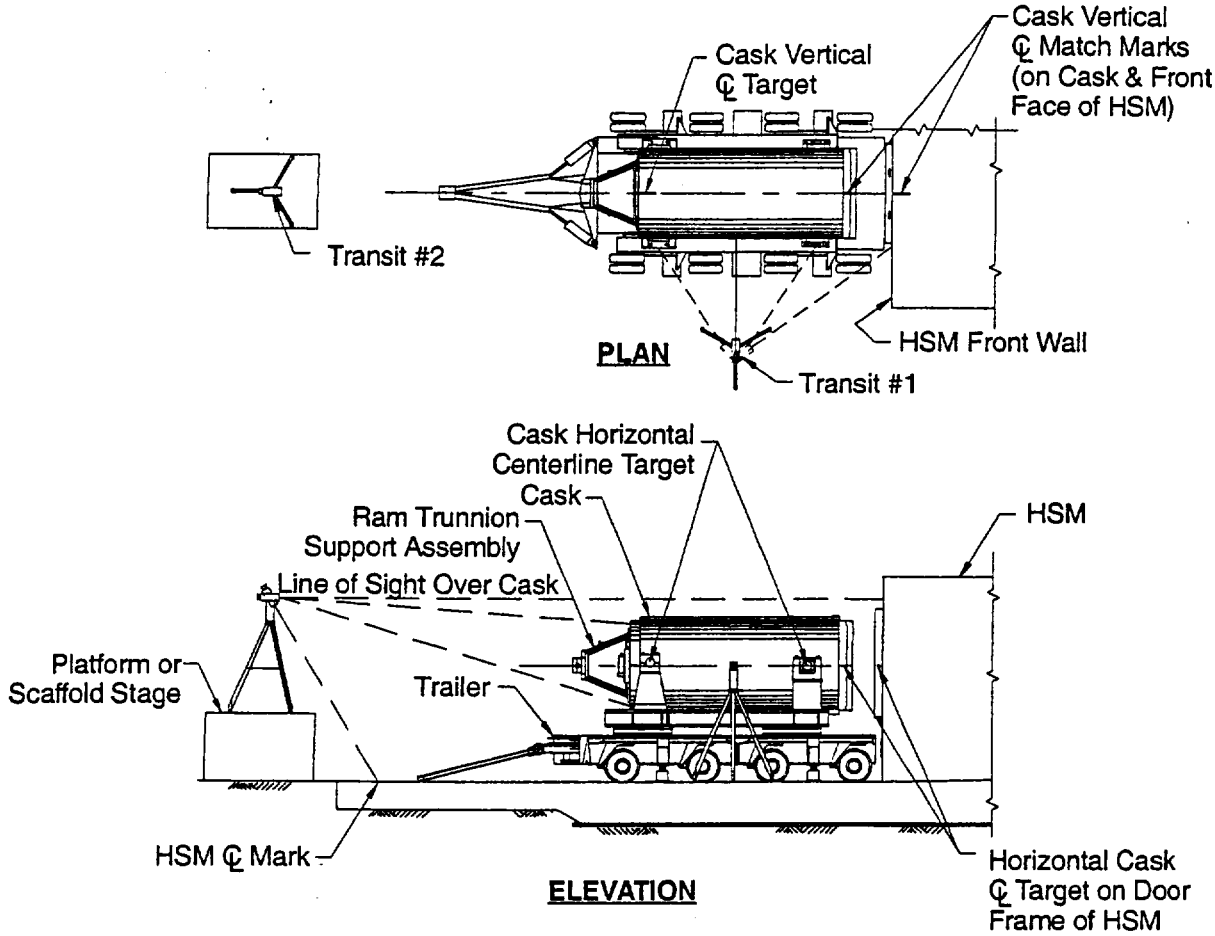

6. WASTE CONFINEMENT AND MANAGEMENT

See Volume I, Chapter 6.

7. RADIATION PROTECTION

This Chapter presents the radiation protection features of the Rancho Seco ISFSI for HSM storage.

7.1 Ensuring that Occupational Radiation Exposures Are As Low As Is Reasonably Achievable (ALARA)

7.1.1 Policy Considerations

See Volume I, Section 7.1.1.

7.1.2 Design Considerations

The design of the DSC and HSM comply with 10 CFR 72 ALARA requirements. Features of the system design that are directed toward ensuring ALARA are:

A. Thick concrete walls and roof on the HSM to minimize the on-site and off-site dose contribution from the ISFSI.

B. A thick shield plug on each end of the DSC to reduce the dose to plant workers performing drying and sealing operations, and during transfer and storage of the DSC in the HSM.

C. Use of a heavy shielded cask for DSC handling and transfer operations to ensure that the dose to plant and ISFSI workers is minimized.

D. Fuel loading procedures which follow accepted practice and build on existing experience.

E. A recess in the HSM access opening to dock and secure the cask during DSC transfer so as to reduce direct and scattered radiation exposure.

F. Double seal welds on each end of DSC to provide redundant containment of radioactive material.

G. Placement of demineralized water in the cask/DSC annulus, then sealing the annulus to minimize contamination of the DSC exterior and the cask interior surfaces during loading and unloading operations in the fuel pool.

H. Use of a heavy shielded door for the HSM to minimize direct and scattered radiation exposure.

I. Use of a passive system design for long term storage that requires minimal maintenance.

J. Use of proven procedures and experience to control contamination during canister handling and transfer operations.

K. Use of water in the DSC cavity during placement of the DSC inner seal weld to minimize direct and scattered radiation exposure.

L. Use of water in the cask/DSC annulus during DSC closure operations to reduce radiation streaming through the annulus.

M. Use of temporary shielding during DSC draining, drying, inerting and closure operations as necessary to further reduce the direct and scattered dose.

Further ALARA measures may be implemented, as appropriate.

7.1.3 Operational Considerations

See Volume I, Section 7.1.3.

7.2 Radiation Sources

7.2.1 Characterization of Sources

The fuel assemblies to be stored in the Rancho Seco ISFSI have a maximum burnup of 38,268 MWd/MTU, a maximum nominal enrichment of 3.21%, and a minimum cooling time of 5.5 years [7.7.2]. As such, the assembly radiological source terms are bounded by those used in the standardized NUHOMS® shielding analysis [7.7.1].

Shielding calculations were not performed for the DSCs while in storage in an HSM. Because the DSC source (for any of the three DSC designs) is bounded by that used in the standardized analysis, the standardized HSM surface dose rates bound as well. An estimate of the HSM surface dose rates when containing design basis Rancho Seco fuel assemblies is made in Section 7.3. The source geometry used for the HSM contribution to the onsite dose assessment is discussed in Volume I, Section 7.4.2.

7.2.2 Airborne Radioactive Material Sources

A discussion of any airborne radioactive material sources is provided in Section 7.2.2 of the Standardized NUHOMS® SAR [7.7.1].

The release of airborne radioactive material is addressed for three phases of system operation:

1. Fuel handling in the spent fuel pool
2. Drying and sealing of the DSC
3. DSC transfer and storage.

Potential airborne releases from irradiated fuel assemblies in the spent fuel pool are discussed in the DSAR.

DSC drying and sealing operations are performed using procedures minimize airborne contamination. During these operations, all vent lines are routed to the radwaste system. Once the DSC is dried and sealed, there are no design basis accidents that could result in a breach of the DSC and the airborne release of radioactivity. Design provisions to preclude the release of gaseous fission products as a result of accident conditions are discussed in Section 8.2.8 of the Standardized NUHOMS® SAR.

During transfer of the sealed DSC and subsequent storage in the HSM, the only postulated mechanism for the release of airborne radioactive material is the dispersion of non-fixed surface contamination on the DSC exterior. By filling the cask/DSC annulus with demineralized water, placing an inflatable seal over the annulus, and utilizing procedures which require examination of the annulus surfaces for smearable

contamination, the contamination limits on the DSC can be kept below the permissible level for off-site shipments of fuel. Therefore, there is no possibility of significant radionuclide release from the DSC exterior surface during transfer or storage.

7.3 Radiation Protection Design Features

7.3.1 Installation Design Features

The design considerations listed in Section 7.1.2 ensure that occupational exposures to radiation are ALARA and that a high degree of integrity is achieved through the confinement of radioactive materials inside the DSC. Applicable portions of Regulatory Position 2 of Regulatory Guide 8.8 have been used as guidance.

A. Access control to radiation areas will be controlled under existing plant procedures.

B. Radiation shielding substantially reduces the exposure of personnel during system operations and storage.

C. The system is a passive storage system; no process instrumentation or controls are necessary during storage. The only required instrumentation is the HSM temperature monitoring.

D. Airborne contaminants and gaseous radiation sources are confined by the high integrity double seal welded DSC assembly.

E. No crud is produced by the system.

F. The necessity for decontamination is reduced by maintaining the cleanliness of the DSC and cask during fuel loading and unloading operations. The DSC and cask surfaces are smooth, nonporous, and are generally free of crevices, cracks, and sharp corners.

G. No resin or sludge is produced by the system.

The system is a passive storage system which uses ambient air for decay heat removal. Each HSM is capable of providing sufficient ventilation and natural circulation to assure adequate cooling of the DSC and its contents so that fuel cladding integrity is maintained. The convective cooling system is completely passive and requires no filtration system.

7.3.2 Shielding

7.3.2.1 Radiation Shielding Design Features

A complete shielding evaluation of the NUHOMS® HSM is provided in Section 7.3.2 of the Standardized NUHOMS® SAR [7.7.1]. The dose rates from the Rancho Seco HSMs will be bounded by those presented in the Standardized NUHOMS® SAR.

See Appendix B for Standardized SAR, Section 7.3.2 (pages 7.3-2 to 7.3-6).

7.3.2.2 Shielding Analysis

The shielding analysis of the NUHOMS® HSM is provided in Section 7.3.2 of the Standardized NUHOMS® SAR [7.7.1]. The results of the standardized HSM shielding analysis have been scaled by the ratio of the Rancho Seco design basis source to the standardized design basis source for use in the site dose assessment provided in Volume I. The scaled dose rates are listed in Table 7-1 for the regions shown in Figure 7-1 [7.7.3].

See Appendix B for Standardized SAR, Section 7.3.2 (pages 7.3-2 to 7.3-6).

Scaling factors have been developed for both neutrons and gamma-rays and for fuel both with (FC) and without (FO) control components. Neutron doses are scaled by the total neutron activity while gamma doses are scaled by the total gamma power. Of the three types of DSCs to be stored, the FC DSC contains the largest gamma-ray source. The FC scaling factors of 0.771 for neutrons and 0.557 for gamma-rays are applied to the HSM roof and side wall dose rates [7.7.2]. Because the control component source is concentrated at the top end of the DSC (away from the HSM front), the FO scaling factors of 0.771 for neutrons and 0.531 for gamma-rays are applied to the HSM front dose rates. The FF DSC source is bounded by that of the FC DSC.

7.3.3 Ventilation

The HSM has a ventilation system to provide for natural circulation cooling of the DSC. No off-gas treatment system is required due to the low exterior contamination level permitted for the DSC.

The system is designed to prevent the release of radioactive material during normal storage of the DSC in an HSM. No additional design features or equipment would result in a significant reduction in a postulated release of radioactive materials. Furthermore, no credible site accident would result in a release of radioactive materials to the environment due to the key features of the system design. These include:

A. The use of a high integrity DSC with redundant seal welds at each end,

B. The passive nature of the system such as the HSM natural convection cooling system which ensures that fuel cladding integrity is maintained, and

C. The operational limits and controls placed on DSC loading and closure and transfer operations.

7.3.4 Area Radiation and Airborne Radioactivity Monitoring Instrumentation

As indicated in Section 3.3.5 of the Standardized NUHOMS® SAR, area radiation and airborne radioactivity monitors are not needed for at the ISFSI. Monitoring devices are used to record dose rates along the ISFSI fence.

7.4 Estimated Onsite Collective Dose Assessment

7.4.1 Operational Dose Assessment

See Volume I, Section 7.4.1.

7.4.2 Site Dose Assessment

See Volume I, Section 7.4.2.

7.5 Health Physics Program

7.5.1 Organization

See Volume I, Section 7.5.1.

7.5.2 Equipment, Instrumentation, and Facilities

See Volume I, Section 7.5.2.

7.5.3 Procedures

See Volume I, Section 7.5.3.

7.6 Estimated Offsite Collective Dose Assessment

7.6.1 Effluent and Environmental Monitoring Program

See Volume I, Section 7.6.1.

7.6.2 Analysis of Multiple Contribution

See Volume I, Section 7.6.2.

7.6.3 Estimated Dose Equivalents

See Volume I, Section 7.6.3.

7.6.4 Liquid Release

See Volume I, Section 7.6.4.

7.7 References

7.1 "Safety Analysis Report for the Standardized NUHOMS® Horizontal Modular Storage System for Irradiated Nuclear Fuel," NUH-003, Revision 4A, VECTRA Technologies, Inc., June 1996.

Reference Calculations

7.2 Radiological Source Term Calculation for Rancho Seco Fuel, VECTRA Calculation Number 2069.0500, Revision 1.

7.3 Rancho Seco NUHOMS® Site Dose Calculation, TNW Calculation Number 2069.0502, Revision 4.

Table 7-1

Rancho Seco HSM Surface Dose Rates [7.7.3]

Location	Neutron (mrem/hour)	Gamma (mrem/hour)	Total (mrem/hour)
Roof (FC Factors)	0.07	35.9	36.0
Front (FO Factors)	0.45	10.7	11.2
Side (FC Factors)	0.006	0.99	0.99

Figure 7-1

HSM Surfaces Used in Average Dose Rate Calculation

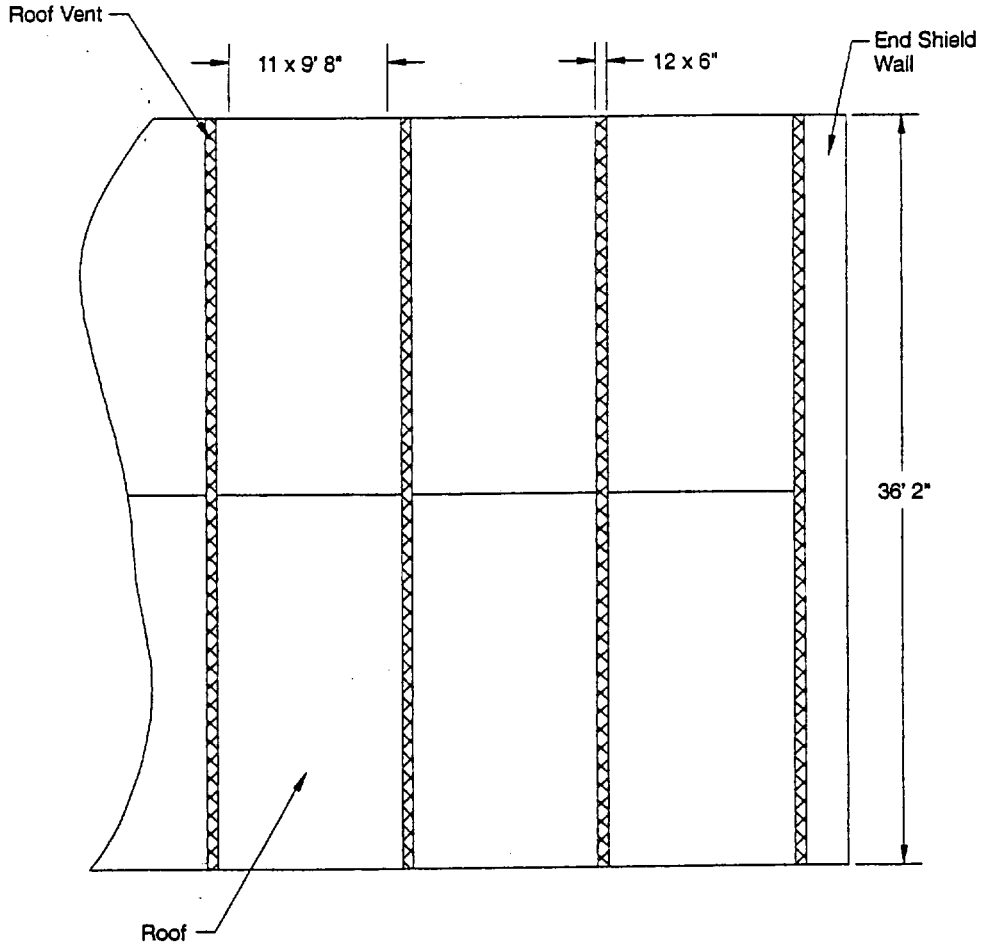

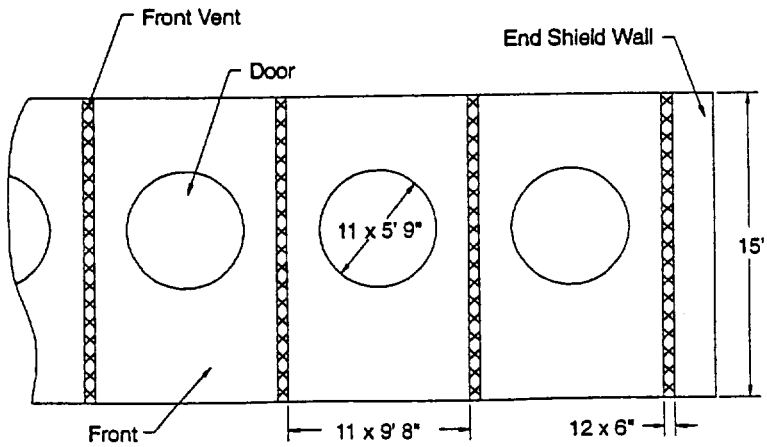

8. ANALYSIS OF HSM STORAGE DESIGN EVENTS

Analyses of all design events are reported in the Standardized NUHOMS® SAR [8.8.1] for the generic NUHOMS®-24P ISFSI design as required by ANSI/ANS 57.9-1984 [8.8.2]. The analyses of these design events have been repeated for the Rancho Seco site-specific ISFSI design, and the results are reported in this section. The analytical assumptions, methodology, and computer codes used to generate the results in this section are identical to those used in the Standardized NUHOMS® SAR.

It is important to note that the majority of the analyses presented throughout this chapter are based on bounding conservative assumptions and methodologies of the Standardized NUHOMS®-24P system design. The objective is to establish upper bound values for the responses of the primary components and structures of the Rancho Seco ISFSI system for the design basis events. Because of the conservative approach adopted herein, the reported temperatures and stresses in this chapter envelope the actual temperatures or states of stress for the various operating and postulated accident conditions. More rigorous and detailed analyses and/or more realistic assumptions and loading conditions would result in temperatures and states of stress which are significantly lower than the reported values.

8.1 Normal HSM Storage Operations

This section includes the evaluation of normal HSM storage conditions as defined in ANSI/ANS 57.9 [8.8.2]. These events, their bases, and analytical methodology are described in the Standardized NUHOMS® SAR [8.8.1]. The site specific loads for the HSM and FO-DSC, FC-DSC, and FF-DSC components are shown herein to be bounded by the Standardized NUHOMS® HSM except for the DSC weight, which is slightly greater than that of the Standardized NUHOMS®-24P DSC.

8.1.1 Thermal Analysis

The Rancho Seco ISFSI design contains FO-DSCs, FC-DSCs and a FF-DSC to be stored in the HSMs. The following evaluations are performed for the Rancho Seco ISFSI system:

1. Thermal analysis of the HSM containing a FO-DSC, FC-DSC, or FF-DSC;

2. Thermal analysis of the FO-DSC, FC-DSC, or FF-DSC in the HSM.

8.1.1.1 HSM Thermal Analysis

The thermal analyses of an HSM loaded with a FO-DSC, FC-DSC, or FF-DSC are performed for the design basis normal, off-normal and accident conditions. The Rancho Seco components are evaluated for a range of design basis ambient temperatures as follows:

1. Normal Conditions Winter or summer conditions with an ambient temperature range from 0°F (minimum winter), 70°F (lifetime average), and 101°F (maximum

summer) were considered. The climatic conditions were selected using ASHRAE weather data for Sacramento as described in calculation package 2069.0401 in Volume IV. For the HSM, the vents were assumed to be open and a solar heat flux of 88 BTU/hr-ft^2 and 108 BTU/hr-ft^2 is included for the 70°F and 101°F ambient temperature cases respectively. The minimum (winter) and maximum (summer) temperature conditions were assumed to occur for a sufficient period of time such that steady-state conditions were achieved. The normal thermal conditions for the cask thermal analysis are identical to the HSM thermal conditions. These conditions are summarized in Table 8-1.

2. Off-Normal Conditions Extreme winter or summer conditions with an ambient temperature range of -20°F to 117°F were considered. For the HSM, the vents were assumed to be open. A solar heat flux of 137 BTU/hr-ft^2 is conservatively included for the 117°F ambient temperature to maximize the HSM roof concrete surface temperatures. This condition is assumed to occur for a sufficient period of time such that steady-state conditions are achieved. The off-normal thermal conditions for the cask thermal analysis are identical to the HSM thermal conditions. These conditions are summarized in Table 8-1.

3. Accident Conditions An extreme summer condition with an ambient temperature of 117°F was considered. In addition, all the HSM inlet and outlet air vents were assumed to be completely blocked for a period of 40 hours or less. A solar heat flux of 137 BTU/hr-ft^2 is conservatively included to maximize the HSM concrete temperatures. These conditions are summarized in Table 8-1. This design basis condition is designated as an accident condition assumed to occur once in the service life of the ISFSI. The parameters important to the HSM concrete and DSC shell temperature distributions are decay heat, ambient temperatures, solar heat fluxes, and geometries of the HSM and DSC. These parameters are compared between the Standardized NUHOMS®-24P design [8.8.1] and the Rancho Seco ISFSI design. The comparisons below demonstrates that the thermal analysis results of the normal, off-normal and accident conditions from the HSM/DSC thermal analysis of the Standardized NUHOMS®-24P design bound the Rancho Seco ISFSI design and hence, are conservatively applied for the corresponding conditions to the Rancho Seco ISFSI design. This comparison is summarized in Table 8-2.

4. Comparison of DSC and HSM Geometries The DSC and HSM geometries for the Rancho Seco ISFSI are similar to the NUHOMS®-24P design [8.8.1]. The thermophysical properties of materials used in the thermal analyses of the Rancho Seco ISFSI system components are identical to the Standardized NUHOMS®-24P design [8.8.1]. Also, the geometrical parameters of the HSM and DSC important to the thermal analysis are identical for the two designs.

5. Comparison of Limiting Decay Heat As described in Volume I, Section 3.1.1.2, the maximum decay heat for the Rancho Seco fuel assembly including the control components is 0.764 kW and the maximum decay heat per FO-DSC or FC-DSC is 13.5 kW. Similarly, the maximum total decay heat in the FF-DSC is 9.93 kW.

   The decay heat value used in the Standardized NUHOMS®-24P design is 1.0 kW per fuel assembly for a total DSC heat load of 24.0 kW [8.8.1]. Thus, the total decay heat per fuel assembly and per DSC for the Rancho Seco design is considerably lower (approximately 44% for the FO-DSC or FC-DSC and 59% for the FF-DSC) than the Standardized NUHOMS®-24P design.

6. Comparison of Limiting Solar Insolation and Ambient Conditions The solar heat fluxes at normal and off-normal ambient conditions for the Rancho Seco ISFSI site and the Standardized NUHOMS®-24P design [8.8.1] are shown in Table 8-2. As shown in Table 8-2, the solar heat fluxes are higher for the Rancho Seco ISFSI design than the Standardized NUHOMS®-24P design. Also, for off-normal operating conditions, the maximum and minimum ambient temperatures are less severe for the Rancho Seco ISFSI design than the Standardized NUHOMS®-24P design.

   The effect of higher solar heat load on the maximum DSC shell and HSM temperatures is determined by comparing the HSM and DSC temperature distribution calculated for 100°F ambient temperature and solar heat flux of 62 Btu/hr-ft^2 and 127 Btu/hr-ft^2. All the other parameters are identical. The results of the two cases are included in Table 8-3. Note that the percentage increases in temperatures are based on °R.

   The results show that when the solar heat flux is increased by over 100%, the maximum percentage increase for the HSM roof temperature at all locations is less than 5%. All the other HSM surfaces (side walls, and floor) have a negligible impact on their temperatures. The results also show that the increase in the solar heat flux has negligible impact on the DSC shell temperatures.

   Applying these results to the Rancho Seco ISFSI design, the impact of increasing the solar heat flux from 62 Btu/hr-ft^2 to 88 Btu/hr-ft^2 and from 123 Btu/hr-ft^2 to 137 Btu/hr-ft^2 is calculated. The results show that the HSM roof temperatures will increase by less than 2.0% when the solar heat flux is increased from 62 Btu/hr-ft^2 to 88 Btu/hr-ft^2. Similarly the HSM roof temperatures will increase by less than 1.0% when the solar heat flux is increased from 123 Btu/hr-ft^2 to 137 Btu/hr-ft^2. Note that the temperature gradient across the HSM roof slab is lower at the higher solar heat flux.

   The maximum HSM and DSC shell temperatures calculated during long term average ambient (70°F) and maximum off-normal ambient conditions (-40°F and 125°F) for the Standardized NUHOMS®-24P design are based on 24 kW total

DSC decay heat [8.8.1]. For the Rancho Seco ISFSI design, the maximum total heat load per DSC is 13.5 kW and the minimum and maximum off-normal ambient conditions are -20°F and 117°F.

Higher heat load from the DSC will result in higher DSC shell temperatures and higher concrete temperatures. For the Rancho Seco ISFSI design at 70°F, the effect on the concrete temperatures of the higher solar heat flux is bounded by the higher total heat load from the DSC of Standardized NUHOMS®-24P design. In addition, the effects of the Rancho Seco ISFSI 117°F ambient case are bounded by the more severe off-normal ambient temperatures for Standardized NUHOMS®-24P design.

Thus the results of Standardized NUHOMS® HSM thermal analysis [8.8.1] for long term normal and off-normal operating conditions bound those for the Rancho Seco ISFSI design and are conservatively applied to the Rancho Seco ISFSI design.

The maximum temperatures calculated during accident conditions for the Standardized NUHOMS®-24P design are based on 125°F ambient and all the HSM inlet and outlet vents blocked for a period of 40 hours. The total decay heat from the DSC is 24 kW and the solar heat flux is 123 Btu/hr-ft^2 [8.8.1]. For the Rancho Seco ISFSI design, the accident conditions are 117°F ambient and all the HSM inlet and outlet vents blocked for a period of 40 hours. The total decay heat from the FO-DSC or FC-DSC is 13.5 kW (9.93 kW from the FF-DSC) and the solar heat flux is 137 Btu/hr-ft^2.

The conclusion of the off-normal conditions above is also applicable to the accident conditions. So the thermal analysis results of accident conditions from the Standardized NUHOMS®-24P design can be applied to the Rancho Seco ISFSI design. The results of the Rancho Seco HSM thermal analysis are summarized in Table 8-4.

8.1.1.2 Thermal Analysis of the FO-DSC, FC-DSC, or FF-DSC Inside the HSM

Thermal analysis is performed for the case when the FO-DSC, FC-DSC or FF-DSC is in the HSM in a long term storage configuration at the Rancho Seco ISFSI site.

1. FO-DSC and FC-DSC Inside the HSM The geometry of the FO-DSC and FC-DSC is similar to the Standardized NUHOMS®-24P design except for the presence of poison plates and poison support sleeves in the fuel basket.

   A two-dimensional model of a cross-section of the DSC located mid-length along the axis of the DSC similar to the Standardized NUHOMS®-24P DSC [8.8.1] is considered. This mid-length cross-section of the DSC gives the maximum spacer disk temperature gradients and maximum clad temperatures. The poison plates

and poison support sleeves are added to the model. Computer code HEATING7 is used for the analysis. The per assembly maximum decay heat is 0.764 kW. All the 24 fuel assemblies are conservatively assumed to have this heat load. This results in a very conservative 18.34 kW per DSC heat load for the DSC basket spacer disk temperature distribution and cladding temperature calculation. The actual maximum heat load allowed in the DSC is 13.5 kW. The results are applicable to both the FO- and FC-DSC.

The DSC shell temperatures for the DSC inside the transfer cask are used for the DSC in the HSM analysis for all but the 70°F ambient temperature case. For the 70°F ambient temperature case, the DSC shell temperatures from the Standardized NUHOMS®-24P design [8.8.1] is used. This is conservative because as discussed previously, the DSC shell temperatures for the Rancho Seco ISFSI design are lower than for the NUHOMS®-24P design. The results of the Rancho Seco DSC thermal analysis are summarized in Table 8-5.

For 70°F ambient air conditions, the maximum calculated fuel cladding temperature is 701°F (372°C). This maximum cladding temperature is below the design basis initial storage temperature limit of 714°F (379°C). For extreme ambient conditions, or short term operating conditions, the maximum fuel cladding temperature is 998°F (537°C). This value is also well below the short term cladding temperature limit of 1058°F (570°C).

This temperature limit for long term storage is based on the methodology in PNL-6189 [8.8.6]. The limits in PNL-6189 are in the form of a family of generic limit curves of recommended maximum allowable initial cladding temperature as a function of cladding hoop stress. The limit of 714°F/379°C was derived by applying the methodology in PNL-6189 for a fuel rod fill pressure of 480 psig, a burnup of 40,000 MWD/MTU and a cooling time of 5.5 years. The cladding temperature exceeds the long term storage temperature limit during the evacuation and backfill processes but is still below the short term cladding temperature limit of 1058°F/570°C. Based on the test data given in PNL-4835 [8.8.7], no rods have failed in inert gas exposures up to 570°C and rods forced to failure required temperatures from 765°C to 800°C to produce rupture. Therefore, exceeding the long term clad temperature limit but staying below the short term clad temperature limit for short term operations like evacuation and backfilling during DSC loading will not cause any fuel rod cladding failure.

The effect of control components in the thermal analysis of the FC-DSC is accounted for by adding the bounding decay heat of the control component to the decay heat from the fuel assembly to determine the total decay heat in the DSC. This total decay heat is conservatively used for the fuel assembly in calculating the temperatures of the fuel cladding and neutron absorber plates. The decay heat from all types of control components at Rancho Seco is calculated to determine

the bounding control component decay heat value. The material composition and decay heat from the various control components at Rancho Seco is given in Table 8-12. The decay heat from the control components is a small fraction of the fuel assembly decay heat (0.6794 kW for the fuel assembly vs. 0.0847 kW for the bounding control component).

The material composition shows that all of the control components have materials with thermal conductivity significantly higher than the helium gas. The presence of control components with the fuel assembly will increase the heat transfer from the fuel because they replace lower thermal conductivity helium. This will help reduce the clad temperatures although credit is not taken for their presence in the DSC.

2. FF-DSC inside the HSM The FF-DSC basket does not contain any poison plates or poison support sleeves. The total maximum decay heat from the FF-DSC is considerably lower than the FO-DSC and FC-DSC values. Hence the fuel cladding temperature in the fuel assemblies calculated with the FO-DSC and FC-DSC containing 24 intact fuel assemblies can be conservatively applied to the FF-DSC also.

   The basket spacer disk temperature distribution for this case is bounded by the FF-DSC inside the cask as described in Volume III, Section 8.1.1.1.1.

8.1.2 Normal HSM Storage Criticality Analysis

Criticality safety during HSM storage is ensured for three reasons. First, during normal and any off-normal storage, the DSC cavity is dry, hence there is insufficient moderation to support critical multiplication. Second, the Rancho Seco ISFSI site is a flood-free site. And third, the Rancho Seco DSCs are designed to remain subcritical when filled with fresh water.

8.1.3 Normal HSM Storage Shielding Analysis

Section 7.3.2 contains a complete description of the HSM shielding analysis and results.

8.1.4 Normal HSM Storage Structural Analysis

Table 8-6 shows the normal HSM storage loads for which the Rancho Seco ISFSI safety related components are designed. These are the same as the Standardized NUHOMS® SAR [8.8.1]. The normal HSM storage loads applicable to the structural analysis of the HSM design only are:

1. HSM Concrete Creep and Shrinkage Analysis
2. Radiation Effects on HSM Concrete
3. HSM Design Analysis

4. HSM Door Analysis

5. HSM Heat Shield Analysis

6. HSM Axial Retainer for DSC

These load types are the same as the Standardized NUHOMS® ISFSI design. These loads are described in detail in the following paragraphs.

8.1.4.1 Dead Weight Loads

The stresses in the HSM and FO-DSC, FC-DSC, and FF-DSCs due to dead weight loads are determined for normal HSM storage conditions as described below:

1. Rancho Seco ISFSI HSM The Standardized NUHOMS® HSM design [8.8.1] is similar to the Rancho Seco HSM design. The FC-DSC design weight bounds the FO-DSC and FF-DSC weights. The dead loads for the HSM include the weight of the HSM structure and its contents, including the DSC. For design of the concrete, these loads also include creep and shrinkage unless these loads act to reduce the concrete design loads.

2. Rancho Seco ISFSI FO-DSC, FC-DSC, and FF-DSC The stresses in the FO-DSC, FC-DSC, and FF-DSC shell assembly components for the dead loads while resting on the DSC support rails in the HSM are calculated for the enveloped dead weight. The dead weight stresses in the FO-DSC, FC-DSC and FF-DSC shell assembly components for the HSM storage condition are summarized in Table 8-9 through Table 8-11, respectively.

3. Rancho Seco ISFSI FO-DSC, FC-DSC, and FF-DSC Internals The stresses in the FO-DSC, and FC-DSC internals due to the HSM storage dead loads are calculated using the same methodologies as for the Standardized NUHOMS®-24P DSC internals in Section 8.1.1.3(A) of the Standardized NUHOMS SAR [8.8.1]. The dead weight stresses in the DSC internals for the HSM storage condition are summarized in Table 8-9 and Table 8-10.

   The spacer disk dead weight stresses are calculated for the vertical and horizontal orientations inside the cask and for the horizontal orientation inside the HSM.

   The spacer disk horizontal dead weight stresses inside the cask are calculated using the analytical models described in Section 8.2.5.2 of the Standardized NUHOMS SAR [8.8.1]. The spacer disk horizontal dead weight stresses are obtained from the analysis load step corresponding to the applied 1g dead weight load.

The NUHOMS®-24P spacer disc vertical dead weight stresses are calculated by factoring the results from the NUHOMS®-24P spacer disc 75g end drop linear elastic static analysis described in Section 8.2.5.2.C (v) of the Standardized NUHOMS SAR [8.8.1] by 1/75.

The spacer disc dead weight stress intensities while inside the HSM are calculated using the analytical models described in Section 8.2.5.2 of the Standardized NUHOMS SAR [8.8.1]. The model boundary conditions are modified to reflect the support conditions provided by the DSC support rails. Linear elastic static analyses are performed for the 1g horizontal dead weight loads.

The dead weight stresses in the FF-DSC internals for the HSM storage condition are assumed to be bounded by the horizontal dead weight stresses inside the cask. Therefore, the horizontal dead weight stresses calculated for the FF-DSC internals inside the cask are used for the HSM storage evaluation. The maximum dead weight stresses in the FF-DSC basket assembly components are summarized in Table 8-11.

4. Rancho Seco ISFSI DSC Support Structure The dead loads for the DSC support structures are included in the HSM loads discussed above.

8.1.4.2 Design Basis Internal Pressure

The range of DSC internal pressures for normal HSM storage conditions are shown in Volume I, Section 8.1.1.2. Internal pressures for DSC leakage are discussed in Section 8.2.2 of Volume I.

8.1.4.3 Design Basis Thermal Loads

The HSM and FO-DSC, FC-DSC, and FF-DSCs are subjected to the thermal expansion loads associated with normal HSM storage conditions. The range of average daily ambient temperatures used for the design of the FO-DSC, FC-DSC, and FF-DSC, and HSM for normal HSM storage conditions are described in Section 8.1.1.1.

The thermophysical properties of materials used in the thermal stress analyses of the Rancho Seco ISFSI system components are identical to the Standardized NUHOMS®-24P design.

1. Rancho Seco ISFSI HSM The Standardized NUHOMS® HSM design [8.8.1] normal thermal loads bound the Rancho Seco HSM normal thermal loads.

2. Rancho Seco ISFSI FO-DSC, FC-DSC, and FF-DSC The evaluation of the FO-DSC, FC-DSC, and FF-DSC shell and basket assembly components for the normal thermal loads is presented in Volume I, Section 8.1.1.3.

3. Rancho Seco ISFSI DSC Support Structure The Standardized NUHOMS®-24P DSC support structure design [8.8.1] normal thermal loads bound the Rancho Seco DSC support structure normal thermal loads.

8.1.4.4 Operational Handling Loads

1. Rancho Seco ISFSI HSM The Standardized NUHOMS® HSM design [8.8.1] handling loads equal the Rancho Seco HSM off-normal and accident handling loads. However, the normal handling load is 30 kips per rail along the axis of the rail for the Rancho Seco HSMs. The live load described in Section 8.1.4.5 are also conservatively assumed to include normal handling loads for the HSM load combinations.

2. Rancho Seco ISFSI FO-DSC, FC-DSC, and FF-DSC The evaluation of the FO-DSC, FC-DSC, or FF-DSC HSM transfer handling loads is described in Volume I, Section 8.1.1.4.

3. Rancho Seco ISFSI DSC Support Structure For the DSC support structure, the normal handling load is equal to the sliding friction between the canister and the support rail, assumed to be 60,000 pounds.

8.1.4.5 Design Basis Live Loads

The Standardized NUHOMS® HSM design [8.8.1] is identical to the Rancho Seco HSM design. The standardized live loads bound the Rancho Seco live loads. The live load also conservatively includes a design basis snow load of 200 pounds/ft^2 on the HSM roof and normal handling loads for the HSM load combinations.

8.1.4.6 HSM Concrete Creep and Shrinkage Analysis

The Standardized NUHOMS® HSM geometry [8.8.1] is similar to the Rancho Seco HSM design. The standardized concrete creep and shrinkage analysis bounds the Rancho Seco concrete creep and shrinkage.

8.1.4.7 Radiation Effects on HSM Concrete

The Standardized NUHOMS® HSM concrete design [8.8.1] is similar to the Rancho Seco HSM design. The significant differences are a slightly greater DSC weight and increased normal handling loads for Rancho Seco. The standardized radiation effects analysis bounds the Rancho Seco radiation effects.

8.1.4.8 HSM Design Analysis

The Standardized NUHOMS® HSM design [8.8.1] is similar to the Rancho Seco HSM design. The standardized design analysis results have been adjusted to accommodate the noted changes.

8.1.4.9 HSM Door Analysis

The Standardized NUHOMS® HSM door design [8.8.1] is similar to the Rancho Seco HSM door design. The standardized door analysis bounds the Rancho Seco door analysis.

8.1.4.10 HSM Heat Shield Analysis

The Standardized NUHOMS® HSM heat shield design [8.8.1] is identical to the Rancho Seco HSM heat shield design. The standardized heat shield analysis bounds the Rancho Seco heat shield analysis.

8.1.4.11 HSM Axial Retainer for DSC

The Standardized NUHOMS® HSM axial retainer for DSC design [8.8.1] is similar to the Rancho Seco HSM axial retainer for DSC design. Thermal Cycling of the HSM

The Standardized NUHOMS® HSM design [8.8.1] is identical to the Rancho Seco HSM design. The standardized thermal cycling analysis bounds the Rancho Seco thermal cycling analysis.

8.1.4.12 FO-DSC, FC-DSC, and FF-DSC Fatigue Evaluation

The FO-DSC, FC-DSC, and FF-DSC fatigue analyses are presented in Volume I, Section 8.1.1.7.

The bottom shield plug of the FC-DSC requires the use of a stiffener between two of the radial stiffeners to provide stiffness for the seismic restraint loading. This additional stiffener, internal to the bottom shield plug, is positioned so that it is effective in resisting the seismic restraint loading. This additional lateral stiffener continuously maintains its relative position to the seismic restraint bolted into the door. It is assumed that the DSCs will not rotate within the HSM during any postulated seismic event.

8.2 Off-Normal HSM Storage Events

Table 8-7 shows the off-normal HSM storage loads for which the Rancho Seco ISFSI safety related components are designed. These are the same as in the Standardized NUHOMS® SAR [8.8.1].

8.2.1 Off-Normal Internal Pressure Analysis

The range of DSC internal pressures for off-normal HSM storage conditions are shown in Volume I, Section 8.1.1.2. The maximum off-normal internal pressures load for the FO-DSC, FC-DSC, and FF-DSCs is 22.6 psia (7.9 psig) for the 117°F ambient air condition. The design basis internal pressure load used for the evaluation of the DSCs in Volume I, Section 8.1.1.2 is 10.0 psig. Therefore, the stresses due to the maximum DSC off-normal internal pressure load are bounded by those calculated for the design basis internal pressure load in Volume I, Section 8.1.1.2. The bounding stresses for the 10 psig internal pressure load are conservatively used for the evaluation of the off-normal internal pressure condition. The maximum stresses due to the 10 psig internal pressure load are summarized in Table 8-9 through Table 8-11.

8.2.2 Off-Normal Thermal Loads Analysis

The off-normal HSM storage thermal loads for the design of the HSM and FO-DSC, FC-DSC, and FF-DSC and internals and DSC support structure are bounded by the Standardized NUHOMS®-24P HSM, DSC and internals and DSC support structure off-normal HSM storage thermal loads analysis [8.8.1]. The cause of off-normal event, the structural, thermal, and radiological consequences, and the recovery measures required to mitigate the off-normal event are the same as the Standardized NUHOMS®-24P design.

The thermal gradients used for the design basis thermal loads analysis in Volume I, Section 8.1.1.3, are conservatively based on extreme ambient temperatures. Therefore the design basis thermal stress analysis results are conservatively used for the evaluation of the off-normal thermal HSM storage condition. The maximum thermal stresses in the DSC assembly components due to the off-normal thermal conditions are summarized in Table 8-9 through Table 8-11.

8.3 HSM Storage Accident Analysis

The design basis accident events specified by ANSI/ANS 57.9-1984 [8.8.2], and other credible accidents postulated to affect the normal safe operation of the Rancho Seco ISFSI system are addressed in this section. Analyses are provided for a range of hypothetical accidents, including those with the potential to result in an annual dose greater than 25 mrem outside the owner controlled area in accordance with 10 CFR 72. The postulated accidents considered in the analysis and the associated Rancho Seco components affected by each accident condition are shown in Table 8-8. These are the same as are in the Standardized NUHOMS®-24P SAR [8.8.1].

The postulated accident conditions addressed in this section include:

1. Tornado Winds and Tornado Generated Missiles.
2. Design Basis Earthquake.
3. Design Basis Flood.
4. Lightning Effects.
5. Debris Blockage of HSM Air Inlet and Outlet Opening.
6. Reduced HSM Air Inlet and Outlet Shielding.
7. Snow and Ice Loads.
8. Fire and Explosion.

For each postulated condition, the accident cause, the structural, thermal, and radiological consequences, and the recovery measures required to mitigate the accident are evaluated.

8.3.1 Tornado Winds and Missiles

The Standardized NUHOMS® HSM design [8.8.1] is identical to the Rancho Seco HSM design. The standardized tornado wind and missile loads bound the Rancho Seco tornado loads.

The cause of accident, the structural, thermal, and radiological consequences, and the recovery measures required to mitigate the accident are the same as the Standardized NUHOMS®-24P design [8.8.1].

8.3.2 Earthquake

As discussed in Volume I, Section 3.2.3, the HSM, FO-DSC, FC-DSC, and FF-DSC are analyzed for the enveloping design basis earthquake. The Standardized NUHOMS® HSM

[8.8.1] seismic design parameters bound the Rancho Seco seismic design parameters. The maximum horizontal and vertical ground acceleration components for design of the Rancho Seco ISFSI are 0.25g (both directions) and 0.17g (vertical), with response spectra and damping values as specified in RG 1.60 [8.8.3] and RG 1.61 [8.8.4].

8.3.2.1 HSM Seismic Evaluation

The Standardized NUHOMS® HSM design [8.8.1] is similar to the Rancho Seco HSM design. The Rancho Seco DSCs are slightly heavier than those in the standard design. The weight difference is negligible, however, and the seismic analysis results are equal to those for the Standardized NUHOMS® design.

The cause of accident, the structural, thermal, and radiological consequences, and the recovery measures required to mitigate the accident are the same as are in the Standardized NUHOMS®-24P design.

8.3.2.2 FO-DSC, FC-DSC, and FF-DSC Seismic Evaluation

The seismic input criteria and analysis methodology are described in Volume I, Sections 3.2.3.1 and 3.2.3.2. Stability analyses are performed to evaluate DSC lift-off from the HSM DSC support structure rails. Stress analyses are performed for the DSC in the HSM storage mode for the postulated design basis earthquake loads. The bounding seismic stress results for the DSC are reported in Volume I, Section 8.2.4.3.

The stability analysis of the FO-DSC, FC-DSC, and FF-DSC in the HSM are the same as the analysis of the Standardized NUHOMS®-24P DSC in the Standardized HSM presented in Section 8.2.3.2(A)(ii) of the Standardized NUHOMS® SAR [8.8.1].

> See Appendix B for Standardized SAR, Section 8.2.3.2(A)(ii) (pages 8.2-16 to 8.2-17).

8.3.2.3 DSC Support Structure Seismic Evaluation

The seismic analysis methods used to evaluate the Rancho Seco components for HSM storage modes are identical to those described in the Standardized NUHOMS® SAR [8.8.1].

8.3.3 Flood

As discussed in Volume I, Section 3.2.2, the HSM, FO-DSC, FC-DSC, and FF-DSC are analyzed for the enveloping design basis flood. The Standardized NUHOMS® ISFSI [8.8.1] flood design parameters are the same as the Rancho Seco ISFSI flood design parameters.

8.3.3.1 HSM Flooding Analysis

The Standardized NUHOMS® HSM design [8.8.1] is identical to the Rancho Seco HSM design. The standardized flood loads bound the Rancho Seco flood loads.

The cause of accident, the structural, thermal, and radiological consequences, and the recovery measures required to mitigate the accident are the same as are in the Standardized NUHOMS®-24P design.

8.3.3.2 FO-DSC, FC-DSC, and FF-DSC Flooding Analyses

The Standardized NUHOMS®-24P DSC flood loads bound the Rancho Seco FO-DSC, FC-DSC, and FF-DSC flood loads. The DSC shell assembly components are loaded by the hydrostatic pressure load due to the 50 foot flood water head (21.7 psig). The stress analysis of the DSC shell assemblies for the flood load is presented in Volume III, Section 8.3.3.3.

The cause of accident, the structural, thermal, and radiological consequences, and the recovery measures required to mitigate the accident are the same as are in the Standardized NUHOMS®-24P design [8.8.1].

8.3.4 Lightning

The likelihood of lightning striking the HSM and causing an off-normal condition is not considered to be a credible event.

Should lightning strike in the vicinity of the HSM the normal storage operations of the HSM will not be affected. The current discharged by the lightning will follow the low impedance path offered by the surrounding structures. Therefore, the HSM will not be damaged by the heat or mechanical forces generated by current passing through the higher impedance concrete. Since the HSM requires no equipment for its continued operation, the resulting current surge from the lightning will not affect the normal operation of the HSM. To further reduce the consequences of a lightning strike, the District will install lightning protection at the ISFSI.

Since no off-normal condition will develop as the result of lightning striking in the vicinity of the HSM, no corrective action is necessary. Also, there are no radiological consequences.

8.3.5 Complete Blockage of HSM Air Inlet and Outlet Vents

The Standardized NUHOMS® HSM design [8.8.1] is identical to the Rancho Seco HSM design. The design basis accident thermal event conservatively postulates the complete blockage of the HSM ventilation air inlet and outlet openings on the HSM side walls for 40 hours with the extreme ambient temperature of 117°F and maximum solar insolation. The standardized accident thermal loads bound the Rancho Seco accident thermal loads.

The cause of accident, the structural, thermal, and radiological consequences, and the recovery measures required to mitigate the accident are the same as are in the Standardized NUHOMS®-24P design. The 125°F ambient temperature cases from the standardized analysis are conservatively used to estimate the HSM concrete temperatures after 40 hours of the blocked vent transient.

8.3.6 Reduced HSM Air Inlet and Outlet Shielding

The postulated accident is the partial loss of radiological shielding for the HSM air outlet vents and reduced inlet vent air flow caused by a postulated movement of one HSM away from one adjacent HSM to a position against the opposite HSM. All other components of the NUHOMS® system are assumed to be functioning normally. The Standardized NUHOMS® HSM design [8.8.1] is similar to the Rancho Seco HSM design. The standardized reduced inlet air flow and outlet shielding analysis bounds the Rancho Seco analysis. The cause of accident, the structural, thermal, and radiological consequences, and the recovery measures required to mitigate the accident are the same as are in the Standardized NUHOMS®-24P design.

8.3.7 Snow and Ice Loads

The Standardized NUHOMS® ISFSI snow and ice loads bound the Rancho Seco ISFSI snow and ice loads. For the Standardized NUHOMS® ISFSI, a total live load of 200 pounds per square foot is used in the analysis to envelope all postulated live loadings, including snow and ice per Standardized NUHOMS® SAR Section 3.2.4 [8.8.1]. Snow and ice loads are not required for the Rancho Seco Site, but they are conservatively used in the HSM analysis.

Snow and ice loads for the HSM are conservatively derived from ANSI A58.1-1982. The maximum 100 year roof snow load, specified for most areas of the continental United States for an unheated structure, of 5.27 kN/m^2 (110 psf) is assumed. For the purpose of this conservative evaluation, a total live load of 9.58 kN/m^2 (200 pounds per square foot) is used in the HSM analysis to envelope all postulated live loadings, including snow and ice. Snow and ice loads for the cask with a loaded DSC are negligible due to the smooth curved surface of the cask, the heat rejection of the SFAs, and the infrequent short term use of the cask.

8.3.8 Fire and Explosion

Fire and explosion protection is discussed in Volume I, Section 3.3.6.

8.4 Load Combinations

The load categories associated with normal HSM storage conditions, off-normal HSM storage conditions and postulated accident conditions are described and analyzed in previous sections. The load combination results for the Rancho Seco ISFSI components important to safety are presented in this section.

8.4.1 HSM Load Combination Evaluation

The load combination methodology and assumptions for the Rancho Seco HSM are identical to those for the Standardized NUHOMS® HSM design [8.8.1]. All of the loadings are also identical, except for the normal handling load and DSC weight. The maximum bending moments and shear forces induced in the HSM for the individual normal and off-normal loads are listed in Table 8-13. Similarly, the maximum moments and shears induced in the HSM for the individual accident loads are listed in Table 8-14.

The governing calculated bending moments and shears for each load combination are tabulated in Table 8-15. The tabulated results represent the bounding shears and moments for either the single free-standing HSM or an array of HSMs. For comparison, the ultimate moment and shear capacity of the HSM for the controlling load combinations are also shown in Table 8-15. Comparison of the reported bending moment and shear for each load combination with the corresponding ultimate capacity shows that the design strength of the HSM is greater than the strength required for the most critical load combination.

8.4.2 DSC Load Combination Evaluation

The load combination methodology and assumptions for the Rancho Seco FO-DSC, FC-DSC, and FF-DSC when in storage condition inside an HSM are identical to those for the Standardized NUHOMS®-24P DSC design [8.8.1]. The stress intensities in the DSC at various critical locations for the appropriate normal operating condition loads are combined with the stress intensities experienced by the DSC during postulated accident conditions. The maximum stress intensity for each component of the DSC calculated for the enveloping normal operating, off-normal, and accident load combinations are given in Volume I, Section 8.3. For comparison the appropriate ASME Code allowables are also presented in that section.

8.4.3 DSC Support Structure Load Combination Evaluation

The load combination methodology and assumptions for the Rancho Seco DSC support structure when a DSC is in storage condition inside an HSM are identical to those for the Standardized NUHOMS®-24P DSC support structure design [8.8.1]. All of the loadings for the Rancho Seco DSC support structure are identical to those for the Standardized NUHOMS® design, except for the normal handling load and DSC weight, which is slightly greater for Rancho Seco. The resulting maximum stresses compared to AISC code allowables are shown in Table 8-16.

The same load combinations are used for the DSC support structure connecting elements. The maximum support loads for the design basis load combinations are shown in Table 8-17. All end connection components are designed to meet the AISC Code requirements for these design loads. The structural steel design is based on the requirements of the AISC code, and the embedments are designed in accordance with the requirements of ACI 349-85.

8.5 Summary of Design Requirements

The HSM, FO-DSC, FC-DSC, FF-DSC, and DSC support structure for a DSC stored inside the HSM complies with ANSI/ANS 57.9 [8.8.2] and ACI-349 [8.8.5].

8.6 Site Characteristics Affecting Safety Analysis

All site characteristics affecting the safety analysis of the Rancho Seco ISFSI are noted throughout this SAR where they apply.

8.7 References

8.1 "Safety Analysis Report for the Standardized NUHOMS® Horizontal Modular Storage System for Irradiated Nuclear Fuel," NUH-003, Revision 4A, VECTRA Technologies, Inc., June 1996.

8.2 American National Standard, "Design Criteria for an Independent Spent Fuel Storage Installation (Dry Storage Type)," ANSI/ANS 57.9-1984, American Nuclear Society, La Grange Park, Illinois (1984).

8.3 U.S. Atomic Energy Commission, "Design Response Spectra for Seismic Design of Nuclear Power Plants," Regulatory Guide 1.60, Revision 1, (December 1973).

8.4 U.S. Atomic Energy Commission, "Damping Values for Seismic Design of Nuclear Power Plants," Regulatory Guide 1.61, (October 1973).

8.5 American Concrete Institute, Code Requirements for Nuclear Safety Related Concrete Structures and Commentary, ACI 349-85 and ACI 349R-85, American Concrete Institute, Detroit, MI (1980).

8.6 S. I. Levy, et al, "Recommended Temperature Limits for Dry Storage of Spent Light Water Reactor Zircaloy-Clad Fuel Rods in Inert Gas," PNL-6189, May 1987.

8.7 A. B. Johnson Jr. and E. R. Gilbert, "Technical Basis for Storage of Zircaloy-Clad Spent Fuel in Inert Gases," PNL-4835, September 1983.

Table 8-1

Solar Insolation and Ambient Temperatures at Rancho Seco ISFSI

Operating Condition	Ambient Temperature (°F)	Solar Heat Flux (Btu/hr-ft^2)
Long Term Average	70	88
Off-Normal Maximum	117	137
Off-Normal Minimum	-20	0
Accident Maximum	117	137

Table 8-2

Solar Insolation and Ambient Temperature Comparison

Operating Condition	Rancho Seco ISFSI Design		Standardized NUHOMS®-24P Design	
	Ambient Temperature (°F)	Solar Heat Flux (Btu/hr-ft^2)	Ambient Temperature (°F)	Solar Heat Flux (Btu/hr-ft^2)
Long Term Average	70	88	70	62
Off-Normal Maximum	117	137	125	123
Off-Normal Minimum	-20	0	-40	0

Table 8-3

Effect of Solar Heat Flux

Location on HSM	Solar=62 Max Temp (°F)	Solar=127 Max Temp (°F)	% Increase for Solar from 62 to 127	Estimated % Increase for Solar from 123 to 137	Estimated % Increase for Solar from 62 to 88
Roof at x=0.0" inside surface	178.6	186.7	1.3	0.3	0.5
Roof at x=0.0" outside surface	140	164.8	4.1	0.9	1.7
Roof at x=20.0" inside surface	166.8	174	1.1	0.2	0.5
Roof at x=20.0" outside surface	139.2	164	4.1	0.9	1.7
Roof at x=40.0" inside surface	143.5	150.7	1.2	0.3	0.5
Roof at x=40.0" outside surface	137.7	162.7	4.2	0.9	1.7
DSC Shell Top	279.0	280.0	~0	~0	~0
DSC Shell Side	252.0	252.0	0	0	0
DSC Shell Bottom	238.0	238.0	0	0	0

Note: The percent increase in temperature is based on absolute temperatures

Table 8-4

HSM Thermal Analysis Results Summary

HSM Vent Inlet Air Temperature (°F)	Maximum DSC Outer Surface Temperature (°F)			Maximum HSM Concrete Temperature (°F)			
				Roof			
	Bottom	Side	Top	Inside	Outside	Side Wall	Floor
70	224	279	323	164	114	137	139
117	274	334	382	241	186	203	199
N/A[1] (All vents plugged with outside air at 117°F)	438	556	614	<350[2]	N/A	323	<350[2]

Notes:

1. The maximum concrete temperatures are based on 24 kW decay heat per DSC, 125°F ambient, and 40 hours of blocked vent condition.

2. The maximum roof and floor temperatures with 13.5 kW are expected to be 289°F and 300°F respectively at the end of 40 hours of blocked vent transient.

Table 8-5

DSC Thermal Analysis Results Summary

HSM Vent Air Inlet Temperature (°F)	Maximum DSC Shell Temperature (°F)	Maximum Fuel Cladding Temperature (°F/°C)	Fuel Cladding Acceptance Criteria (°F/°C)
70	305	701/372	714/379
117[1]	423	746/397	1058/570
N/A (HSM Vents plugged with ambient air at 117°F)	614	809/432	1058/570

Notes:

1. The 117°F case is based on DSC in the cask with cask in a transfer mode. This case bounds the DSC in the HSM case.

Table 8-6

Normal Operating Loading Identification

Load Type	Affected Component			
	DSC Shell Assembly	DSC Internals	DSC Support Structure	Reinforced Concrete HSM
Dead Weight	X	X	X	X
Internal Pressure	X			
Normal Thermal	X	X	X	X
Normal Handling	X		X	X
Live Loads				X

Table 8-7

Off-Normal Operating Loading Identification

Load Type	Affected Component			
	DSC Shell Assembly	DSC Internals	DSC Support Structure	Reinforced Concrete HSM
Dead Weight	X	X	X	X
Internal Pressure	X			
Off-Normal Thermal	X	X	X	X
Off-Normal Handling	X		X	X

Table 8-8

Postulated Accident Loading Identification

Accident Load Type	Affected Component			
	DSC Shell Assembly	DSC Internal Basket	DSC Support Structure	HSM
Loss of Adjacent HSM Shielding Effects	(radiological consequence only)			
Tornado Wind				X
Tornado Missiles				X
Earthquake	X	X	X	X
Flood	X			X
Lightning				X
Blockage of HSM Air Inlets and Outlets	X	X	X	X
Accident Handling	X		X	X

Table 8-9

FO-DSC Normal/Off-Normal HSM Storage Condition Stress Results

FO-DSC Component	Stress Type	Stress (ksi)[1]		
		Dead Weight	Internal Pressure	Thermal
Shell	Primary Membrane	2.6	1.6	N/A
	Membrane + Bending	5.2	3.4	N/A
	Primary + Secondary	4.9	9.7	32.2
Outer Top Cover Plate	Primary Membrane	1.20	2.1	N/A
	Membrane + Bending	1.85	7.1	N/A
	Primary + Secondary	1.27	6.3	23.9
Inner Top Cover Plate	Primary Membrane	0.76	0.9	N/A
	Membrane + Bending	2.2	4.5	N/A
	Primary + Secondary	2.1	3.4	24.9
Outer Bottom Cover Plate	Primary Membrane	0.71	0.4	N/A
	Membrane + Bending	1.21	0.7	N/A
	Primary + Secondary	1.13	0.5	30.3
Inner Bottom Cover Plate	Primary Membrane	0.71	0.4	N/A
	Membrane + Bending	0.83	0.8	N/A
	Primary + Secondary	0.82	0.8	28.0
Spacer Disc	Primary Membrane	2.3	N/A	N/A
	Membrane + Bending	3.3	N/A	N/A
	Primary + Secondary	3.3	N/A	42.6
Support Rods	Primary Membrane	0.0	N/A	N/A
	Membrane + Bending	0.3	N/A	N/A
	Primary + Secondary	0.3	N/A	15.4
Guide Sleeves	Primary Membrane	0.1	N/A	N/A
	Membrane + Bending	0.9	N/A	N/A
	Primary + Secondary	0.9	N/A	0.0
Support Ring	Primary Membrane	0.2	0.5	N/A
	Membrane + Bending	0.2	0.5	N/A
	Primary + Secondary	0.2	0.5	5.2

Notes:

1. Values shown are maximum irrespective of location.

Table 8-10

FC-DSC Normal/Off-Normal HSM Storage Condition Stress Results

FC-DSC Component	Stress Type	Stress (ksi)[1]		
		Dead Weight	Internal Pressure	Thermal
Shell	Primary Membrane	2.6	1.6	N/A
	Membrane + Bending	5.2	3.4	N/A
	Primary + Secondary	4.9	9.7	32.2
Outer Top Cover Plate	Primary Membrane	1.2	2.1	N/A
	Membrane + Bending	1.9	7.1	N/A
	Primary + Secondary	1.3	6.3	23.9
Inner Top Cover Plate	Primary Membrane	0.8	0.9	N/A
	Membrane + Bending	2.2	4.5	N/A
	Primary + Secondary	2.1	3.4	24.9
Outer Bottom Cover Plate	Primary Membrane	0.53	0.07	N/A
	Membrane + Bending	0.54	0.68	N/A
	Primary + Secondary	N/A	0.68	17.8
Inner Bottom Cover Plate	Primary Membrane	0.53	0.4	N/A
	Membrane + Bending	0.54	15	N/A
	Primary + Secondary	0.59	15	28.0
Spacer Disc	Primary Membrane	2.3	N/A	N/A
	Membrane + Bending	3.3	N/A	N/A
	Primary + Secondary	3.3	N/A	42.6
Support Rods	Primary Membrane	0.0	N/A	N/A
	Membrane + Bending	0.3	N/A	N/A
	Primary + Secondary	0.3	N/A	15.4
Guide Sleeves	Primary Membrane	0.1	N/A	N/A
	Membrane + Bending	0.9	N/A	N/A
	Primary + Secondary	0.9	N/A	0.0
Support Ring	Primary Membrane	0.2	0.5	N/A
	Membrane + Bending	0.2	0.5	N/A
	Primary + Secondary	0.2	0.5	5.2

Notes:

1. Values shown are maximum irrespective of location.

Table 8-11

FF-DSC Normal/Off-Normal HSM Storage Condition Stress Results

FF-DSC Component	Stress Type	Stress (ksi)[1]		
		Dead Weight	Internal Pressure	Thermal
Shell	Primary Membrane	2.6	1.6	N/A
	Membrane + Bending	5.2	3.4	N/A
	Primary + Secondary	4.9	9.7	32.2
Outer Top Cover Plate	Primary Membrane	1.2	2.1	N/A
	Membrane + Bending	1.85	7.1	N/A
	Primary + Secondary	1.27	6.3	23.9
Inner Top Cover Plate	Primary Membrane	0.76	0.9	N/A
	Membrane + Bending	2.2	4.5	N/A
	Primary + Secondary	2.1	3.4	24.9
Outer Bottom Cover Plate	Primary Membrane	0.53	0.07	N/A
	Membrane + Bending	0.54	0.68	N/A
	Primary + Secondary	N/A	0.68	17.8
Inner Bottom Cover Plate	Primary Membrane	0.53	0.4	N/A
	Membrane + Bending	0.54	15	N/A
	Primary + Secondary	0.59	15	28.0
Spacer Disc	Primary Membrane	1.0	0.0	N/A
	Membrane + Bending	1.0	0.0	N/A
	Primary + Secondary	N/A	0.0	27.2
Support Plates	Primary Membrane	0.0	0.0	N/A
	Membrane + Bending	0.1	0.0	N/A
	Primary + Secondary	N/A	0.0	0.0
Fuel Can	Primary Membrane	0.1	0.0	N/A
	Membrane + Bending	0.1	0.0	N/A
	Primary + Secondary	N/A	0.0	0.0

Notes:

1. Values shown are maximum irrespective of location.

Table 8-12

Control Component Material and Decay Heat

Control Component	Absorber Material	Cladding Material	Maximum Decay Heat[1] (kW)
Gray APSRA	Inconel	Stainless Steel	0.024
Black APSRA	Ag-In-Cd	Stainless Steel	0.011
CRA	Ag-In-Cd	Stainless Steel	<0.011
ORA	N/A	Stainless Steel	<0.011
BPA	Al_2O_3-B_4C	Stainless Steel	<0.011

Notes:

1. Decay heat is based on a 7 year cooling time.

Table 8-13

Maximum HSM Reinforced Concrete Bending Moments and Shear Forces for Normal and Off-Normal Loads

Structural Section	Force Component	HSM Internal Forces (kip/ft.,in.-k/ft.)[1]		
		Live Loads	Normal[2] Thermal	Off-Normal[3] Thermal
Floor Slab	Shear	0.0	0.9	1.9
	Moment	0.2	84.0	153.0
Side Wall	Shear	0.3	0.6	1.7
	Moment	2.2	99.0	334.0
Front Wall	Shear	0.2	0.6	1.2
	Moment	2.9	284.0	684.0
Rear Wall	Shear	0.4	0.8	2.1
	Moment	1.3	76.0	362.0
Roof Slab	Shear	2.6	0.5	1.6
	Moment	79.7	175.0	533.0

1 Values shown are maximums irrespective of location

2 Maximum moments are based on cracked section properties.

3 Accident thermal case is conservatively used for off-normal thermal case. Maximum moments are based upon cracked section properties.

Table 8-14

Maximum HSM Reinforced Concrete Bending Moments and Shear Force for Accident Loads

Structural Section	Force Component	HSM Internal Forces (kip/ft., in.-k/ft.)			
		Tornado Winds	Tornado[3] Missile	Seismic	Blocked Vents Thermal[2]
Floor Slab	Shear	1.3	4.6	0.6	1.9
	Moment	35.7	129.0	25.0	153.0
Side Wall	Shear	10.5	22.2[4]	4.3	1.7
	Moment	81.7	377.3	60.2	334.0
Front Wall	Shear	3.5	11.5	5.2	1.2
	Moment	102.3	216.0	144.	684.0
Rear Wall	Shear	7.5	9.8	0.8	2.1
	Moment	28.6	164.8	21.9	362.0
Roof Slab	Shear	9.9	28.2	0.7	1.6
	Moment	323.5	407.8	13.5	533.0

(1) Maximum loads shown are irrespective of location.

(2) Maximum moments are calculated using cracked section properties.

(3) The maximum shear on the HSM shield wall for the DBT missile is 458 kips. The shield wall capacity for punching shear is calculated based on ACI-349 Section 11.11.2.1, and is 1941 kips.

(4) The maximum shear due to tornado missile is the maximum stress d/2 from the back wall inner face.

Table 8-15

HSM Enveloping Load Combination Results

Load[1] Combination	Loading Combination Description	Governing Load[2][5]		Capacities	
		V_{max} (k/ft.)	M_{max} (k-in./ft.)	fV_c (k/ft.)[4]	M_u (k-in./ft.)
1	1.4D + 1.7L	26.6	418.8	40.4	910
2	1.4D + 1.7L + 1.7H	26.6	418.8	40.4	910
3	0.75(1.4D + 1.7L + 1.7H + 1.7T + 1.7W)	20.7	800.2	23.9	910
4	0.75(1.4D + 1.7L + 1.7H + 1.7T)	20.7	800.2	23.9	910
5	D + L + H + T + E	35.8	488.2	23.9	910
6	D + L + H + T + F	32.0	768.9	40.4	910
7[6]	D + L + H + T_a[3]	20.0	366.3	42.4	407

D = Dead Weight, E = Earthquake Load, F = Flood Induced Loads, H= Lateral Soil Pressure Load, L = Live Load, T = Normal Condition Thermal Load, T_a = Off-normal or Accident Condition Thermal Load, W = Tornado Wind and Missile Loads

(1) Load combinations are based on ANSI-57.9.

(2) Governing loads shown are irrespective of locations. Loads reported have minimum margin to design capacity.

(3) Thermal accident load (T_a) are based on 125°F ambient with air inlets and outlets blocked.

(4) The shear capacity ϕV_c is calculated using Equation 11-3 of ACI 349-85.

(5) Results of load combinations 3 through 7 are based on cracked section. Others based on uncracked sections.

(6) Material properties taken at 400°F for load combination 7.

Table 8-16

DSC Support Structure Enveloping Load Combination Results

Component	Load Combination	Calculated Stress				Inter-Action (Calc/ Allow-able)	Allow-able Shear Stress (ksi)
		Axial (ksi)	Strong Axis Bending (ksi)	Weak Axis Bending (ksi)	Shear (ksi)		
Column	Normal Operation $DW_s + DW_c + HL_f$	2.5	1.7	0.9	0.1	0.28	12.7
	Off-Normal Operation $DW_s + HL_j$	4.5	1.1	3.7	0.2	0.35	14.4
	Accident $DW_s + DW_c + DBE$	6.2	6.1	17.0	6.3	0.99	12.7
	Accident $DW_s + DW_c + T_a$	4.7	10.0	3.2	0.5	0.71	10.6
Cross Beam	Normal Operation $DW_s + DW_c + HL_f$	0.9	2.8	0.1	2.0	0.2	12.7
	Off-Normal Operation $DW_s + HL_j$	0.5	4.4	11.6	4.0	0.57	14.4
	Accident $DW_s + DW_c + DBE$	2.0	6.7	1.6	4.3	0.34	12.7
	Accident $DW_s + DW_c + T_a$	1.7	6.1	3.1	3.4	0.41	10.6

Table 8-16

DSC Support Structure Enveloping Load Combination Results

(Concluded)

Component	Load Combination	Calculated Stress				Inter-Action (Calc/ Allow-able)	Allow-able Shear Stress (ksi)
		Axial (ksi)	Strong Axis Bending (ksi)	Weak Axis Bending (ksi)	Shear (ksi)		
Rail	Normal Operation $DW_s + DW_c + HL_f$	2.6	4.6	0.0	3.9	0.37	12.7
	Off-Normal Operation $DW_s + HL_j$	6.8	20.2	0.0	15.8	0.94	20.2
	Accident $DW_s + DW_c + DBE$	4.1	16.7	0.0	13.1	0.66	17.8
	Accident $DW_s + DW_c + T_a$	0.8	9.4	0.0	3.9	0.35	14.9

DW_s = Dead Weight Support Assembly, HL_j = Off-Normal Handling Loads-Jammed, DW_c = Dead Weight Canister, HL_f = Normal Loads Friction, DBE = Seismic Loads, T_a = Accident Thermal

(1) Maximum stresses reported irrespective of location.

(2) Allowable stresses taken at 300°F for all combinations except accident thermal, which are taken at 600°F.

(3) Allowables for $DW_s + DW_c + DBE$ increased by 60%, and allowables for $DW_s + HL_j$ and $DW_s + DW_c + T_a$ increased by 70% in accordance with ANSI/ANS 57.9.

Table 8-17

DSC Support Structure Enveloping Load Combination Results

Support Member End Connection Loads

Load Combination	Maximum End Loads					
	Support Column			Lateral Brace		
	Axial (k)	Shear (k)	Bending (in.-k)	Axial (k)	Shear (k)	Bending (in.-k)
Normal Operations $DW_s + DW_c + HL_f$	16.3	0.4	15.5	0.4	0.7	11.9
Off-Normal Operations $DW_s + HL_j$	29.6	0.7	34.0	5.3	0.2	3.8
Accident $DW_s + DW_c + DBE$	40.9	23.6	154.7	21.1	15.6	62.7
Accident $DW_s + DW_c + T_a$	30.6	2.0	90.8	15.0	3.1	57.8

DW_s = Dead Weight Support Assembly, HL_j = Off-normal Handling Loads - Jammed, DW_c = Dead Weight Canister, HL_f = Normal Handling Loads - Friction, DBE = Seismic Loads

(1) All loads are absolute sums of individual load cases and are maximum values irrespective of location.

9. CONDUCT OF OPERATIONS

The organization and general plans for operating the Rancho Seco ISFSI are provided in Volume I, Chapter 9.

10. OPERATING CONTROLS AND LIMITS

10.1 Proposed Operating Controls and Limits

The areas where controls and limits are necessary to ensure safe operation of the Rancho Seco HSMs are shown in Table 10-1. Operating controls and limits proposed for the Rancho Seco ISFSI in general and for the Rancho Seco DSCs are discussed in Chapter 10 of Volume I. The items to be controlled are selected based on the design criteria and safety analyses for normal, off-normal, and accident conditions documented in Chapters 3, 7 and 8 of Volumes I and II.

10.2 Development of Operating Controls and Limits

This section provides an overview of and the general bases for the operating controls and limits specified for HSM storage at the Rancho Seco ISFSI. These specifications cover the requirements associated with the operation of the Rancho Seco HSMs and cask to ensure the protection of the public's health and safety. Technical Specifications Section 5.5.3 provides a full description and discussion of these specifications. Operating controls and limits for the Rancho Seco ISFSI in general are developed in Section 10.2 of Volume I.

10.2.1 Functional and Operating Limits, Monitoring Instruments, and Limiting Control Settings

This category of operating controls and limits applies to operating variables that are observable and measurable. The Rancho Seco HSMs are completely passive during storage. Therefore, no safety-related monitoring instruments or limiting control settings are required.

The functional limits for the fuel to be stored in the Rancho Seco ISFSI are provided in Technical Specifications Section 2.1.1. Any of the three Rancho Seco DSC designs may be stored in the HSMs.

10.2.2 Limiting Conditions for Operation

10.2.1.1 Equipment

No limiting conditions regarding minimum available equipment or operating characteristics apply to the Rancho Seco ISFSI. The components of storage, the DSC, and the HSM have been analyzed for all credible equipment failure modes and extreme environmental conditions. No postulated event results in damage to fuel, release of radioactivity, or danger to the public health and safety. All operational equipment is to be maintained, tested, and operated according to the implementing procedures developed for the Rancho Seco ISFSI. The failure or unavailability of any operational component can delay the transfer of the DSC to the HSM, but does not result in an unsafe condition.

10.2.2.2 Technical Conditions and Characteristics

The following technical conditions and characteristics are required for DSC storage in HSMs at the Rancho Seco ISFSI:

1. HSM Air Exit Temperature
2. HSM Air Vent Surveillance
3. HSM Thermal Performance Surveillance

Technical Specifications Section 5.5.3 discusses the bases for selecting the above conditions and characteristics. Technical conditions and characteristics for the Rancho Seco ISFSI in general are discussed in Section 10.2.2.2 of Volume I.

The overall technical and operational considerations are to assure that the fuel cladding is maintained at a temperature sufficiently low to preclude cladding degradation during normal storage conditions and that the DSC is transferred from the cask to the HSM in a safe manner. Through the analyses and evaluations provided in Chapters 7 and 8, this SAR demonstrates that the above technical conditions and characteristics are adequate and that no significant public or occupational health and safety hazards exist.

10.2.3 Surveillance Requirements

Analysis has shown that the HSM can fulfill its safety functions during all normal and off-normal operating conditions and during all postulated accident conditions as described in Chapter 8. The only surveillance required during long-term storage is the periodic visual inspection of the HSM air inlets and outlets to ensure they are clear of obstructions. A more detailed discussion of the bases for the HSM surveillance requirement is provided in Section 8.2.7 of the Standardized NUHOMS® SAR [10.10.1]. (In addition, non-safety related HSM roof concrete temperature monitoring is available to provide further assurance of required cooling.)

See Appendix B for Standardized SAR, Section 8.2.7 (pages 8.2-43 to 8.2-45).

10.2.4 Design Features

The following design features are important to the safe operation of HSM storage at the Rancho Seco ISFSI and require design controls and limits:

1. Material mechanical properties for structural integrity, containment, and shielding
2. Material composition and dimensional control for subcriticality
3. Decay heat removal
4. Passive ventilation system configuration for effective decay heat removal

Component dimensions are not specified here since the combination of materials, dose rates, criticality safety, and component fit-up define the operable limits for dimensions (i.e., thickness of shielding materials, thickness of concrete, DSC plate thicknesses, etc.). The values for these design parameters are specified on the Volume IV drawings. Changes to any of these design features should be implemented only after the District conducts a safety evaluation in accordance with 10 CFR 72.48.

The combination of the above controls and limits and those discussed in the previous subsections of Section 10.2 define requirements for HSM storage components that provide radiological protection and structural integrity during normal storage and postulated accident conditions.

10.2.5 Administrative Controls

The Rancho Seco ISFSI administrative control requirements are discussed in Section 10.2.5 of Volume I.

10.3 Operating Control and Limit Specifications

The operating controls and limits applicable to HSM storage in the Rancho Seco ISFSI are discussed in Technical Specifications Section 5.5.3.

10.3.1 HSM Air Exit Temperature

See Technical Specifications Section 5.5.3.2

10.3.2 Surveillance of the HSM Air Vents

See Technical Specifications Section 5.5.3.3

10.3.3 Surveillance of HSM Thermal Performance

See Technical Specifications Section 5.5.3.1

10.4 References

10.1 "Safety Analysis Report for the Standardized NUHOMS® Horizontal Modular Storage System for Irradiated Nuclear Fuel," NUH-003, Revision 4A, VECTRA Technologies, Inc., June 1996.

Table 10-1

Areas Where Controls and Limits Are Specified

Areas for Operating Controls and Limits	Conditions or Other Items to be Controlled
Horizontal Storage Module	Maximum Air Exit Temperature
Surveillance	Inspection of HSM Inlets and Outlets
Training	Operations, Maintenance, and Surveillance

11. QUALITY ASSURANCE

Quality Assurance for the Rancho Seco ISFSI is described in Volume I, Chapter 11.

Rancho Seco

Independent Spent Fuel Storage Installation

Final Safety Analysis Report
Volume III
Cask Storage

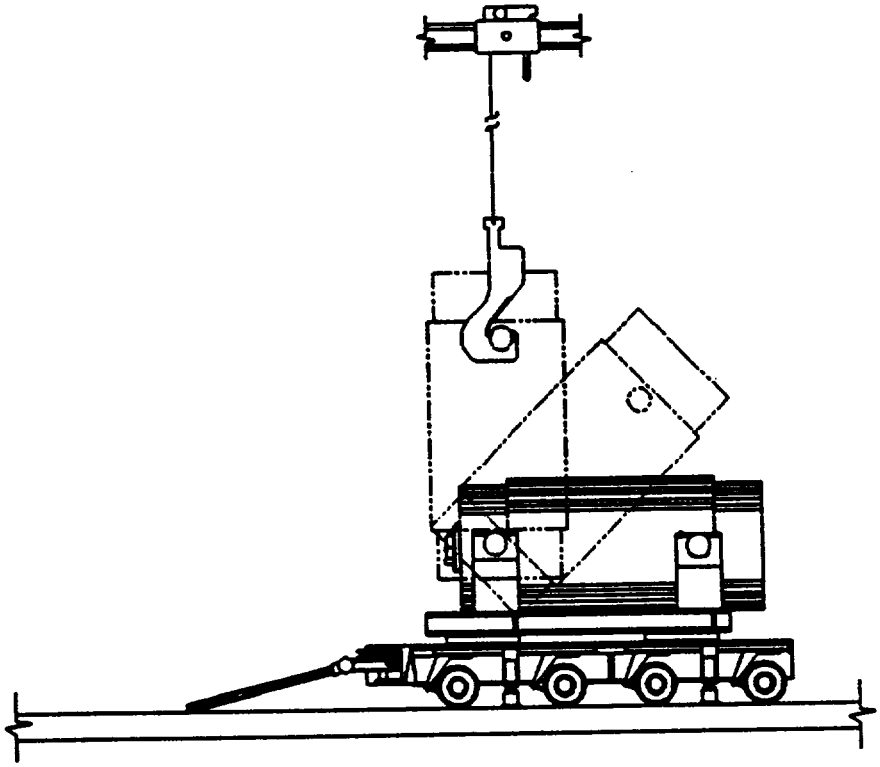

SMUD
Sacramento Municipal Utility District

TABLE OF CONTENTS

		Page
1.	Introduction and General Description of Installation	1.1-1
2.	Site Characteristics	2.1-1
3.	Principal Design Criteria	3.1-1
3.1	Purpose of Installation	3.1-1
3.1.1	Spent Fuel to be Stored	3.1-1
3.1.2	General Operating Functions	3.1-1
3.2	Structural and Mechanical Safety Criteria	3.2-1
3.2.1	Tornado and Wind Loadings	3.2-1
3.2.2	Water Level (Flood) Design	3.2-1
3.2.3	Seismic Design Criteria	3.2-1
3.2.4	Snow and Ice Loads	3.2-1
3.2.5	Load Combination Criteria	3.2-1
3.2.5.1	Dry Shielded Canister	3.2-1
3.2.5.2	Cask	3.2-2
3.3	Safety Protection Systems	3.3-1
3.3.1	General	3.3-1
3.3.2	Protection by Multiple Confinement Barriers & Systems	3.3-1
3.3.2.1	Confinement Barriers and Systems	3.3-1
3.3.2.2	Cask Cooling	3.3-1
3.3.3	Protection by Equipment and Instrumentation Selection	3.3-1
3.3.4	Nuclear Criticality Safety	3.3-2
3.3.5	Radiological Protection	3.3-2
3.3.6	Fire and Explosion Protection	3.3-2
3.3.7	Materials Handling and Storage	3.3-2
3.4	Summary of ISFSI Design Criteria	3.4-1
3.5	References	3.5-1
4.	Installation Design	4.1-1
4.1	Location and Layout	4.1-1
4.2	Storage Site	4.2-1
4.2.1	Structures	4.2-1
4.2.2	Storage Site Layout	4.2-1
4.2.3	Storage Cask Description	4.2-1
4.2.3.1	Function	4.2-1
4.2.3.2	Description	4.2-1
4.2.4	Instrumentation System Description	4.2-3
4.3	Transport System	4.3-1

TABLE OF CONTENTS

		Page
4.4	Operating Systems	4.4-1
4.4.1	Loading and Unloading System	4.4-1
4.4.1.1	Function	4.4-1
4.4.1.2	Major Components and Operating Characteristics	4.4-1
4.4.1.3	Safety Considerations and Controls	4.4-1
4.4.2	Decontamination System	4.4-2
4.4.3	Storage Cask Repair and Maintenance	4.4-2
4.4.4	Utility Supplies and Systems	4.4-2
4.5	Classification of Structures, Systems, and Components	4.5-1
4.6	Decommissioning Plan	4.6-1
4.7	References	4.7-1
5.	Operation Systems	5.1-1
5.1	Operation Description	5.1-1
5.1.1	Narrative Description	5.1-1
5.1.2	Process Flow Diagram	5.1-1
5.1.3	Identification of Subjects for Safety Analysis	5.1-1
5.1.3.1	Criticality Prevention	5.1-1
5.1.3.2	Instrumentation	5.1-1
5.1.3.3	Maintenance Techniques	5.1-1
5.2	Control Room and Control Areas	5.2-1
5.3	Spent Fuel Accountability Program	5.3-1
5.4	Spent Fuel Transport	5.4-1
5.5	References	5.5-1
6.	Cask Storage Waste Management	6.1-1
7.	Radiation Protection	7.1-1
7.1	Ensuring that Occupational Radiation Exposures Are As Low As Is Reasonably Achievable (ALARA)	7.1-1
7.1.1	Policy Considerations	7.1-1
7.1.2	Design Considerations	7.1-1
7.1.3	Operational Considerations	7.1-1
7.2	Radiation Sources	7.2-1
7.2.1	Characterization of Sources	7.2-1
7.2.2	Airborne Radioactive Material Sources	7.2-1
7.3	Radiation Protection Design Features	7.3-1
7.3.1	Storage System Design Features	7.3-1
7.3.2	Shielding	7.3-1

TABLE OF CONTENTS

			Page
		7.3.2.1 Radiation Shielding Design Features	7.3-1
		7.3.2.2 Shielding Analysis	7.3-1
	7.3.3	Area Radiation and Airborne Radioactivity Monitoring Instrumentation	7.3-2
7.4		Estimated Onsite Collective Dose Assessment	7.4-1
7.5		Offsite Collective Dose	7.5-1
7.6		Health Physics Program	7.6-1
7.7		Environmental Monitoring Program	7.7-1
7.8		References	7.8-1
8.		Analysis of Cask Storage Design Events	8.1-1
8.1		Normal Cask Storage Operations	8.1-1
	8.1.1	Cask Thermal Analysis	8.1-1
		8.1.1.1 Thermal Analysis of the FO-DSC, FC-DSC, or FF-DSC in the Cask During Transfer Mode	8.1-2
		8.1.1.2 Rancho Seco FO-DSC, FC-DSC, or FF-DSC in the Cask During Draining and Drying	8.1-3
		8.1.1.3 Rancho Seco FO-DSC, FC or FF-DSC in the Cask During Long Term Storage	8.1-4
	8.1.2	Criticality Analysis	8.1-5
	8.1.3	Shielding Analysis	8.1-5
	8.1.4	Structural Analysis	8.1-5
		8.1.4.1 Dead Weight	8.1-5
		8.1.4.2 Design Basis Internal Pressure	8.1-6
		8.1.4.3 Design Basis Thermal Loads	8.1-7
		8.1.4.4 Design Basis Live Loads	8.1-7
8.2		Off-Normal Cask Storage Events	8.2-1
	8.2.1	Extreme Ambient Temperatures	8.2-1
		8.2.1.1 Postulated Cause of Event	8.2-1
		8.2.1.2 Detection of Event	8.2-1
		8.2.1.3 Analysis of Effects and Consequences	8.2-1
		8.2.1.4 Corrective Actions	8.2-1
	8.2.2	Off-Normal Pressure Loads	8.2-2
		8.2.2.1 Postulated Cause of Event	8.2-2
		8.2.2.2 Detection of Event	8.2-2
		8.2.2.3 Analysis of Effects and Consequences	8.2-2
		8.2.2.4 Corrective Actions	8.2-2
8.3		Cask Storage Accidents	8.3-1
	8.3.1	Tornado Winds/Tornado Missiles	8.3-1
		8.3.1.1 Postulated Cause of Event	8.3-1

TABLE OF CONTENTS

			Page
		8.3.1.2 Detection of Event	8.3-1
		8.3.1.3 Analysis of Effects and Consequences	8.3-1
		8.3.1.4 Corrective Actions	8.3-3
	8.3.2	Earthquake	8.3-4
		8.3.2.1 Postulated Cause of Event	8.3-4
		8.3.2.2 Detection of Event	8.3-4
		8.3.2.3 Analysis of Effects and Consequences	8.3-4
		8.3.2.4 Corrective Actions	8.3-5
	8.3.3	Flood	8.3-5
		8.3.3.1 Postulated Cause of Event	8.3-5
		8.3.3.2 Detection of Event	8.3-5
		8.3.3.3 Analysis of Effects and Consequences	8.3-5
		8.3.3.4 Corrective Actions	8.3-6
	8.3.4	Accident Pressurization	8.3-6
	8.3.5	Lightning	8.3-6
8.4		Cask Storage Load Combination Evaluation	8.4-1
	8.4.1	DSC Load Combination Evaluation	8.4-1
	8.4.2	Cask Load Combination Evaluation	8.4-1
	8.4.3	Summary of Design Requirements Met	8.4-1
8.5		Site Characteristics Affecting Safety Analysis	8.5-1
8.6		References	8.6-1
9.		Conduct of Operations	9.1-1
9.1		Physical Security Plan	9.1-1
10.		Operating Controls and Limits for Cask Storage	10.1-1
10.1		Proposed Operating Controls and Limits	10.1-1
10.2		Development of Operating Controls and Limits	10.2-1
10.3		Operating Control and Limit Specifications	10.3-1
11.		Quality Assurance	11.1-1

LIST OF TABLES

Table 3-1 DSC Handling and Storage Design Loadings

Table 3-2 Cask Handling and Storage Design Loadings

Table 5-1 Instrumentation Used During Cask Loading Operations

Table 8-1 Cask Thermal Analysis Results for Transfer Mode

Table 8-2 Maximum Fuel Cladding Temperature During Transfer

Table 8-3 Cask Thermal Analysis Results During Draining and Drying in Decon Area

Table 8-4 Maximum Fuel Cladding Temperature Comparison During Draining and Drying in Cask

Table 8-5 Cask Thermal Analysis Results During Long Term Storage

Table 8-6 Maximum Fuel Cladding Temperature During Long Term Storage

Table 8-7 Cask Storage Normal Operating Loading Summary

Table 8-8 Normal Cask Storage Condition Stress Intensities

Table 8-9 FO-DSC Normal Cask Storage Condition Stress Results

Table 8-10 FC-DSC Normal Cask Storage Condition Stress Results

Table 8-11 FF-DSC Normal Cask Storage Condition Stress Results

Table 8-12 Cask Storage Off-Normal Loading Summary

Table 8-13 Cask Storage Accident Loading Summary

Table 8-14 Cask Storage Accident Condition Cask Stress Intensities

Table 8-15 Cask Storage Accident Condition FO-DSC Stress Results

Table 8-16 Cask Storage Accident Condition FC-DSC Stress Results

Table 8-17 Cask Storage Accident Condition FF-DSC Stress Results

Table 8-18 Cask Cavity Pressure (Including DSC Leakage After Placement in Storage)

Table 10-1 Areas Where Controls and Limits Are Specified

LIST OF FIGURES

Figure 5-1 Cask Loading Operations Flow Chart

Figure 5-2 Primary Operations for Cask Storage

Figure 7-1 Cask Storage Configuration Shielding Results (mrem/hr)

Figure 7-2 Cask Decontamination and Welding Machine Setup Shielding Results (mrem/hr)

Figure 7-3 Cask Wet Welding Shielding Results (mrem/hr)

Figure 7-4 Cask Dry Welding Shielding Results (mrem/hr)

1. INTRODUCTION AND GENERAL DESCRIPTION OF INSTALLATION

An overview of the ISFSI, and of the casks, is provided in Volume I.

Although not licensed for storage under 10 CFR 72, the cask is designed to fully satisfy the requirements of 10 CFR 72 for dry fuel storage.

2. SITE CHARACTERISTICS

A description of the Rancho Seco ISFSI site and the site characterization studies is presented in Volume I, Chapter 2.

3. PRINCIPAL DESIGN CRITERIA

The NUHOMS®-MP187 Cask is designed as a transfer cask for use in loading HSMs and as a transportation cask for offsite shipment under the provisions of 10 CFR 71.

3.2 Structural and Mechanical Safety Criteria

3.2.1 Tornado and Wind Loadings

The cask is designed to withstand the environmental conditions described in Section 3.2, Volume I.

3.2.2 Water Level (Flood) Design

The cask is designed to withstand the environmental conditions described in Section 3.2, Volume I.

3.2.3 Seismic Design Criteria

The cask is designed to withstand the environmental conditions described in Section 3.2, Volume I.

3.2.4 Snow and Ice Loads

The cask is designed to withstand the environmental conditions described in Section 3.2, Volume I.

3.2.5 Load Combination Criteria

3.2.5.1 Dry Shielded Canister

The FO-DSC, FC-DSC, and FF-DSCs are all designed using similar design approaches, design criteria and load combinations as specified for the Standardized NUHOMS® DSC in Section 3.2.5.2 and Table 3.2-6 of the Standardized NUHOMS® SAR [3.3.1]. The FO-DSC, FC-DSC, and FF-DSC load combination results are presented in Section 8.4.1. The effects of fatigue on the FO, FC, and FF-DSCs due to thermal cycling are addressed in Section 8.1.1.7 of Volume I. Volume I, Table 3-6 provides a summary of DSC load combinations and service levels. The DSC structural design criteria are summarized in Volume I, Table 3- 7.

The DSC is designed by analysis to meet the stress intensity allowables of the ASME Boiler and Pressure Vessel Code (1992 Code, 1993 Addendum) [3.3.2] Section III, Division 1, Subsection NB, NF, and NG for Class 1 components and supports. The DSC is conservatively designed by using linear elastic or non-linear elastic-plastic analysis methods. The load combinations considered for the DSC normal, off-normal and postulated accident loadings are shown in Volume I, Table 3-6. ASME Code Service Levels A and B allowables are conservatively used for normal and off-normal

operating conditions. Service Levels C and D allowables are used for accident conditions such as a postulated cask drop accident. Using this acceptance criteria ensures that in the event of a design basis drop accident, the DSC containment pressure boundary is not breached. As indicated by the results of the analysis of Section 8.2.5 of the Standardized NUHOMS® SAR [3.3.1], the amount of deformation sustained by the spacer disks does not inhibit retrieval of the fuel assemblies. The maximum shear stress theory is used to calculate principal stresses. Normal operational stresses are combined with the appropriate off-normal and accident stresses. It is assumed that only one postulated accident condition occurs at any one time. The structural design criteria for the DSC are summarized in Volume I, Table 3-7. The effects of fatigue on the DSC due to thermal and pressure cycling are addressed in Section 8.2.10 of the Standardized NUHOMS® SAR [3.3.1].

3.2.5.2 Cask

The cask is designed for use in transferring DSCs from the fuel building to the ISFSI. The cask components are designed by analysis to meet the stress allowable of the ASME Code [3.3.2] Subsection NB or NF, as appropriate, for Class 1 components. The cask is conservatively designed by using linear elastic analysis methods. The load combinations considered for the transfer cask normal, off-normal, and postulated accident loadings are shown in Volume I, Table 3- 8. Service Levels A and B allowables are used for all normal operating and off-normal loadings. Service Levels C and D allowable are used for load combinations which include postulated accident loadings. Allowable stress limits for the lifting trunnions are conservatively developed to meet the requirements of ANSI N14.6-1993 for critical loads. The cask structural design criteria are summarized in Volume I, Table 3-9 and Table 3-10. The effects of fatigue on the cask due to thermal cycling are addressed in Section 8.1.4.5.

3.3 Safety Protection Systems

3.3.1 General

The MP187 cask is licensed for offsite transportation. Due to the cask's design to meet offsite shipping requirements, large factors of safety are afforded for site transfer conditions.

3.3.2 Protection by Multiple Confinement Barriers & Systems

3.3.2.1 Confinement Barriers and Systems

The cask has no confinement function under 10 CFR 72.

3.3.2.2 Cask Cooling

The cask is designed to meet the cooling requirements of Chapter 3, Volume I without active cooling mechanisms.

3.3.3 Protection by Equipment and Instrumentation Selection

Deleted

3.3.4 Nuclear Criticality Safety

The criticality requirements of 10 CFR 72 are met by the design of the DSCs. These requirements and a description of how they are met are contained in Volume I, Section 3.3.4.

3.3.5 Radiological Protection

The cask is designed to maintain on-site and offsite doses ALARA during transfer operations. Cask operating procedures and shielding design provide the necessary radiological protection to assure radiological exposures to station personnel and the public are ALARA. The cask radiation shielding criteria are a surface average dose rate of 100 mrem/hr.

3.3.6 Fire and Explosion Protection

Deleted

3.3.7 Materials Handling and Storage

Deleted

3.4 Summary of ISFSI Design Criteria

Deleted

3.5 References

3.1 "Safety Analysis Report for the Standardized NUHOMS® Horizontal Modular Storage System for Irradiated Nuclear Fuel," NUH-003, Revision 4A, VECTRA Technologies, Inc., June 1996.

3.2 American Society of Mechanical Engineers, ASME Boiler and Pressure Vessel Code, Section III, Division 1, 1992 Edition with Addenda through 1993.

Table 3-1

DSC Handling and Storage Design Loadings

Design Load Type	SAR Section Reference	Design Parameter
Flood	3.2.2	Maximum water height: 50 ft.
Seismic	3.2.3	Peak Ground Accelerations: Horizontal: 0.25g (both directions) Vertical: 0.17g
Dead Loads	8.1.4.1	Weight of loaded DSC
Normal and Off-Normal Pressure	8.1.4.2 8.2.2	Maximum Internal Pressure: Normal Conditions: 10 psig Off-Normal Conditions: 10 psig
Normal and Off-Normal Operating Temperature	8.1.1.3	Ambient air temperature range of -20°F to 117°F.
Accidental Cask Drop Loads	8.2.5	Equivalent static decelerations: Vertical end drop: 75g Horizontal side drop: 75g Oblique corner drop: 25g
Accident Internal Pressure	8.3.4	Enveloping internal pressure of 50 psig based on 100% fuel cladding rupture and fill gas release, 30% fission gas release, ambient air temperature of 117°F, and blocked HSM vents.

Table 3-2

Cask Transfer Design Loadings

Design Load Type	SAR Section Reference	Design Parameter
Design Basis Tornado Wind	3.2.1	Maximum wind pressure: 397 psf
Tornado Missile	3.2.1	Missile Types: Automobile: Weight = 3967 lbs. Area = 20 ft^2 Velocity = 126 mph Penetration Resistant Missile Weight = 276 lbs. Diameter = 8.0 in. Velocity = 126 mph Barrier Impingement Missile Solid steel sphere Diameter = 1.0 in. Velocity = 126 mph
Flood	3.2.2	Maximum water height = 50 feet Maximum water velocity = 15 fps
Seismic	3.2.3	Peak Ground Accelerations: Horizontal: 0.25g (both directions) Vertical: 0.17g
Snow and Ice	3.2.4	Maximum Load = 110 psf (included in live loads)
Dead Weight	8.1.4.1	Dead weight including loaded DSC
Normal and Off-Normal Operating Temperatures	8.1.1.3 8.2.1	Ambient air temperature range of -20°F to 117°F.
Accidental Cask Drop Loads	Volume I 8.2.1	Equivalent static decelerations: Vertical end drop = 75g Horizontal side drop = 75g Oblique corner drop = 25g
Fire and Explosion	3.3.6	Enveloped by other design basis events

4. INSTALLATION DESIGN

4.1 Location and Layout

Deleted

4.2 Storage Site

4.2.1 Structures

Volume I, Chapter 1 describes the Rancho Seco ISFSI structures.

4.2.2 Storage Site Layout

4.2.3 Storage Cask Description

4.2.3.1 Function

4.2.3.2 Description

Refer to Volume I, Chapter 1 for a description of the functional modes of the NUHOMS®-MP187 cask (i.e., transfer and transport), and a general overview of the cask design. Refer to Volume I, Chapter 4 for a complete description of the cask.

4.2.4 Instrumentation System Description

Deleted

4.3 Transport System

Deleted

4.4 Operating Systems

Deleted

4.5 Classification of Structures, Systems, and Components

Classification of the cask is discussed in Section 3.4 of Volume I.

4.6 Decommissioning Plan

The cask is manufactured of commonly used materials (e.g., stainless steel, lead). Any of the components that may be contaminated will be cleaned and/or disposed of using the decommissioning technology available at the time of decommissioning.

The system is a dry containment system that effectively confines all contamination within the DSC. When the DSC is removed, the cask can be manually decontaminated and removed from the site for decommissioning or for use as an offsite transportation package under the provisions of 10 CFR 71.

4.7 References

4.1 "Safety Analysis Report for the Standardized NUHOMS® Horizontal Modular Storage System for Irradiated Nuclear Fuel," NUH-003, Revision 4A, VECTRA Technologies, Inc., June 1996.

4.2 Rancho Seco Defueled Safety Analysis Report.

5. OPERATION SYSTEMS

5.1 Operation Description

Deleted

5.2 Control Room and Control Areas

See Volume I, Section 5.5.

5.3 Spent Fuel Accountability Program

Deleted

5.4 Spent Fuel Transport

The equipment used to transfer the spent fuel to the ISFSI is described in Volumes I and II. The roadway locations and construction are discussed in Volume I.

5.5 References

5.1 "Safety Analysis Report for the Standardized NUHOMS® Horizontal Modular Storage System for Irradiated Nuclear Fuel," NUH-003, Revision 4A, VECTRA Technologies, Inc., June 1996.

Table 5-1

Deleted

Figure 5-1
Cask Loading Operations Flow

Deleted

Figure 5-2

Primary Operations for Cask Storage

Deleted

6. CASK STORAGE WASTE MANAGEMENT

Deleted

7. RADIATION PROTECTION

7.1 Ensuring that Occupational Radiation Exposures Are As Low As Is Reasonably Achievable (ALARA)

7.1.1 Policy Considerations

See Volume I, Section 7.1.1.

7.1.2 Design Considerations

The cask is designed to transfer a loaded DSC from the fuel building to the ISFSI and to provide a means for transporting DSCs offsite. The ALARA features of the cask when used in its DSC transfer mode are identical to those discussed in Section 7.1.2. of the Standardized NUHOMS® SAR [7.7.1].

7.1.3 Operational Considerations

Deleted

7.2 Radiation Sources

7.2.1 Characterization of Sources

The design basis Rancho Seco fuel and control component sources are provided in Volume I, Section 7.2.1. The source geometry for shielding calculations when the DSCs are in the cask is a solid cylinder, similar to that described in the Standardized NUHOMS® SAR [7.7.1]. The cask source has been split into three cylindrical regions: the in-core (fueled) region, the portion of the assembly below the in-core region, and the portion of the assembly above the in-core region [7.7.6].

See Appendix B for Standardized SAR, Section 7.2.1 (pages 7.2-1 to 7.2-2).

Each FO-DSC is assumed to contain 24 design basis fuel assemblies without control components, each FC-DSC is assumed to contain 24 design basis assemblies and 24 design basis control components, and the FF-DSC is assumed to contain 13 design basis assemblies without control components. Because the FC-DSC contains the largest total source, its presence is assumed in all cask shielding calculations. Section 7.3.2 provides a detailed description of the shielding models.

7.3 Radiation Protection Design Features

7.3.1 Storage System Design Features

Deleted

7.3.2 Shielding

7.3.2.1 Radiation Shielding Design Features

The cask is a cylindrical shielded vessel constructed from steel and various shielding materials. Radial gamma shielding is provided by a stainless steel inner shell, a lead shield, and a stainless steel structural shell. Neutron shielding in the radial direction is provided by a hydrogenous solid neutron absorbing material. The stainless steel cask top and bottom cover plates provide additional shielding in the axial direction to that of the DSC shield plugs.

7.3.2.2 Shielding Analysis

This section describes the methods and assumptions used to calculate the dose rates around the cask during handling and transfer. A description of the computer code used is provided below, as are descriptions of the individual models used to perform the analysis [7.7.6].

1. Computer Code: Cask shielding calculations were performed using the two-dimensional discrete ordinates code DORT [7.7.2]. The CASK cross section library, which contains multigroup data for 22 neutron energy groups and 18 gamma-ray groups, was used in the discrete ordinates calculations [7.7.3]. A P_3 order of scattering was used for all cases, while the quadrature set used varied for each case. Dose rates are calculated by multiplying the DORT calculated group fluxes by flux-to-dose rate conversion factors defined in ANSI/ANS 6.1.1 [7.7.4].

2. Cask Dose Rates: The DORT model of the cask in its transfer configuration is shown in Reference 7.8. This model represents the FC-DSC in storage with 24 design basis fuel assemblies and 24 design basis axial power shaping rod assemblies. The FC-DSC is considered the worst case due to the large activation source in the control components. A radially biased, 132 direction quadrature set based on an S_{10} set is used in the flux calculations. One DORT run was made for each of the three cask source regions and axial peaking in the active fuel region was accounted for by using data for a similar assembly provided in EPRI NP-5128 [7.7.5]. The effective radius of each source region was chosen such that the actual source volume is conserved.

   The dose rates in the vicinity of the cask in its loading and transfer configuration are shown in Figure 7-1. These results include neutron, gamma, and secondary gamma contributions from the active fuel, bottom nozzle, top nozzle, and control

component sources. The average cask surface dose rate calculated using the DORT results is 42.5 mrem/hour neutron and 16.6 mrem/hour gamma.

3. Cask Operational Dose Rates Three DORT models of the cask were prepared to evaluate the dose rates during several phases of the DSC loading process. Each model includes one run for each of the two relevant source regions, active fuel and top nozzle. The FC-DSC was again chosen as the worst case. The DORT models for decontamination and welding setup, wet welding and draining, and dry welding are shown in Reference [7.7.6]. In addition to the shielding provided by the cask and DSC, the welding machine base includes temporary neutron and gamma shielding to keep operational doses ALARA. An upward biased 166 angle quadrature set was used in the flux calculations.

   The cask operational dose rate results are shown in Figure 7-2 through Figure 7-4. While the cask operational dose rates are calculated using a series of conservative assumptions, for the sake of conservatism, the cask dose rates reported in Figure 7-2 through Figure 7-4 are used directly in the estimate of the occupational exposure described in Volume I, Section 7.4.1.

7.3.3 Area Radiation and Airborne Radioactivity Monitoring Instrumentation

Deleted

7.4 Estimated Onsite Collective Dose Assessment

See Volume I, Section 7.4.2.

7.5 Offsite Collective Dose

The estimated offsite annual collective dose is discussed in Volume I, Section 7.6.2.

7.6 Health Physics Program

See Volume I, Section 7.5.

7.7 Environmental Monitoring Program

The environmental monitoring requirements for the Rancho Seco ISFSI are discussed in Sections 7.3.4 and 7.6 of Volume I.

7.8 References

7.1 "Safety Analysis Report for the Standardized NUHOMS® Horizontal Modular Storage System for Irradiated Nuclear Fuel," NUH-003, Revision 4A, VECTRA Technologies, Inc., June 1996.

7.2 "DORT-PC - Two-Dimensional Discrete Ordinates Transport Code System," CCC-532, Oak Ridge National Laboratory, RSIC Computer Code Collection, October 1991.

7.3 "CASK-81 - 22 Neutron, 18 Gamma-Ray Group, P_3, Cross Sections for Shipping Cask Analysis," DLC-23, Oak Ridge National Laboratory, RSIC Data Library Collection, June 1987.

7.4 "American National Standard for Neutron and Gamma-Ray Flux-to-Dose Rate Factors," ANSI/ANS-6.1.1-1977, American Nuclear Society, La Grange Park, Illinois, March 1977.

7.5 "The TN-24P PWR Spent-Fuel Storage Cask: Testing and Analysis," EPRI NP-5128, Electric Power Research Institute, April 1987.

Reference Calculations

7.6 Rancho Seco NUHOMS® Occupational Exposure Calculation, VECTRA Calculation Number 2069.0503, Revision 2.

Figure 7-1

Cask Shielding Results (mrem/hr)

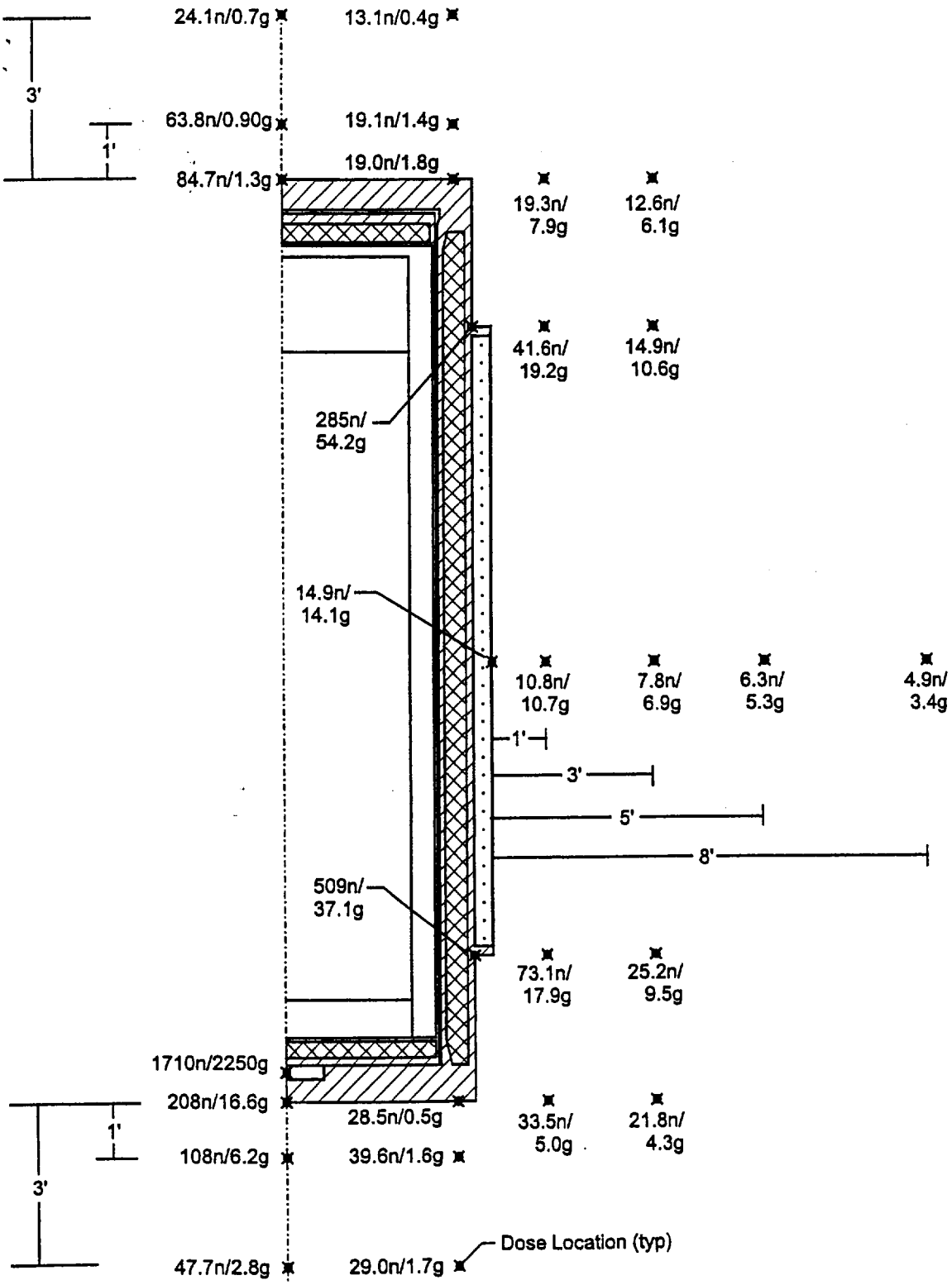

Figure 7-2

Cask Decontamination and Welding Machine Setup Shielding Results (mrem/hr)

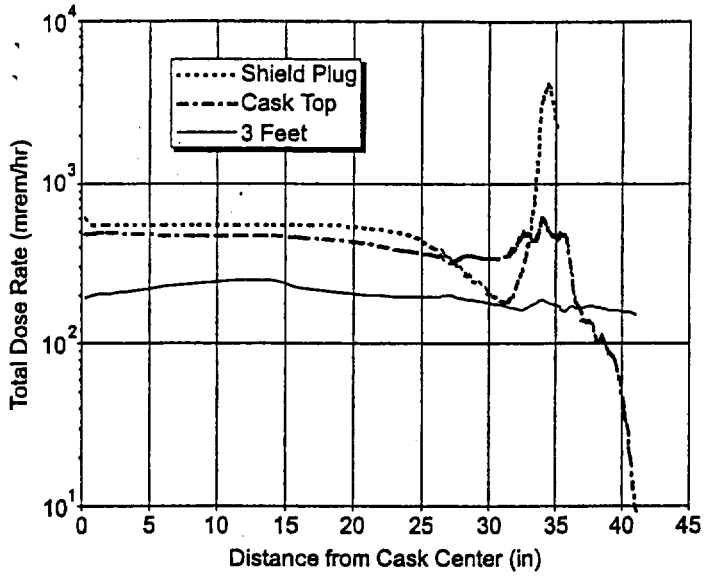

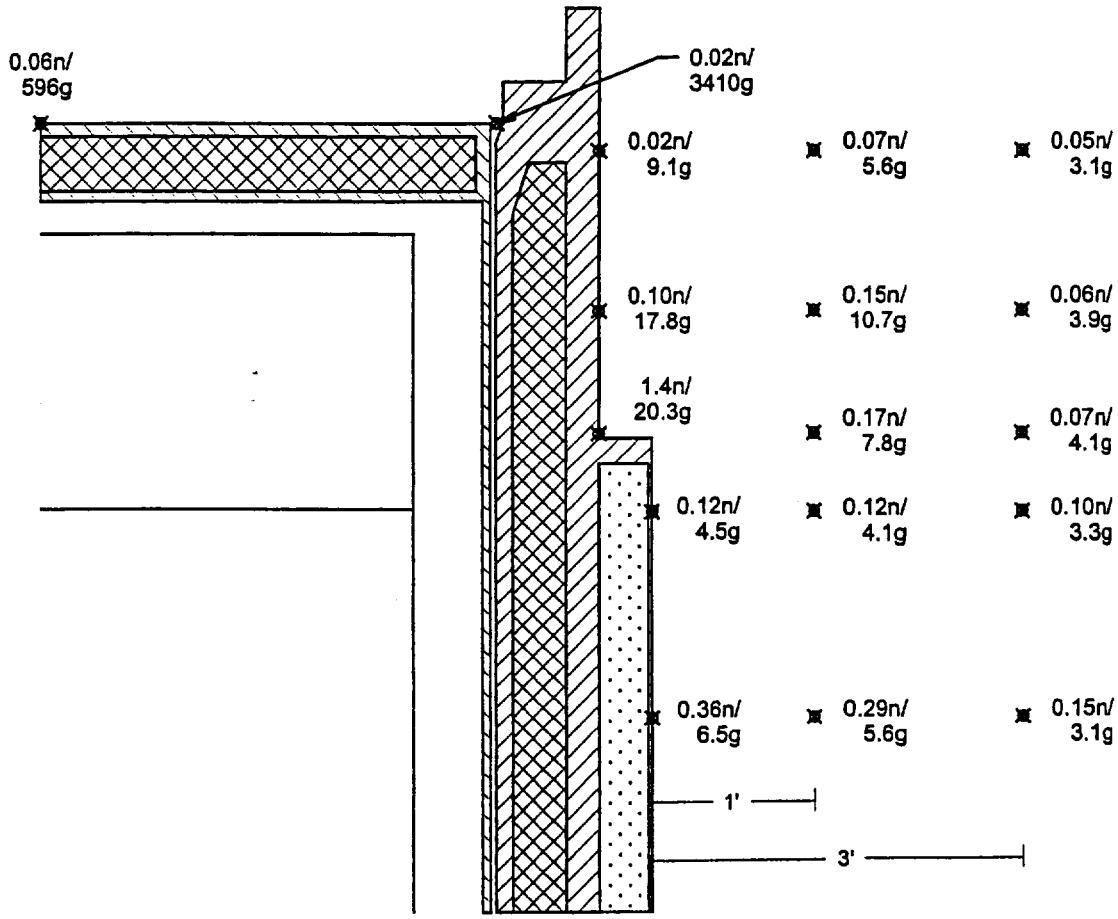

Figure 7-3

Cask Wet Welding Shielding Results (mrem/hr)

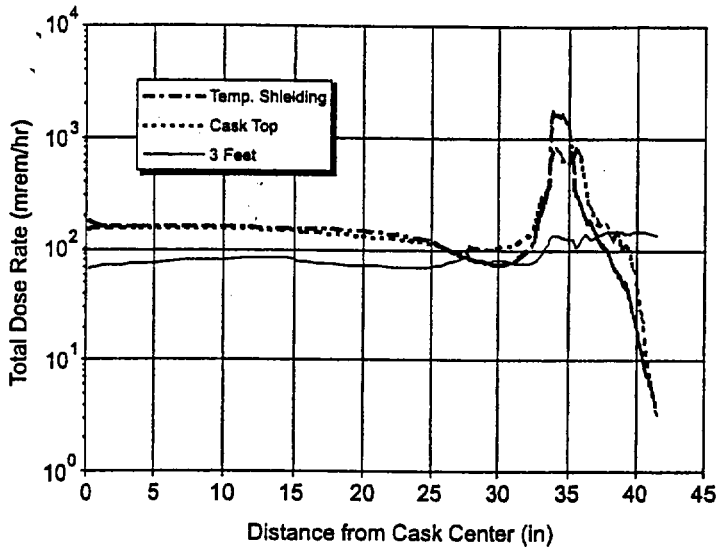

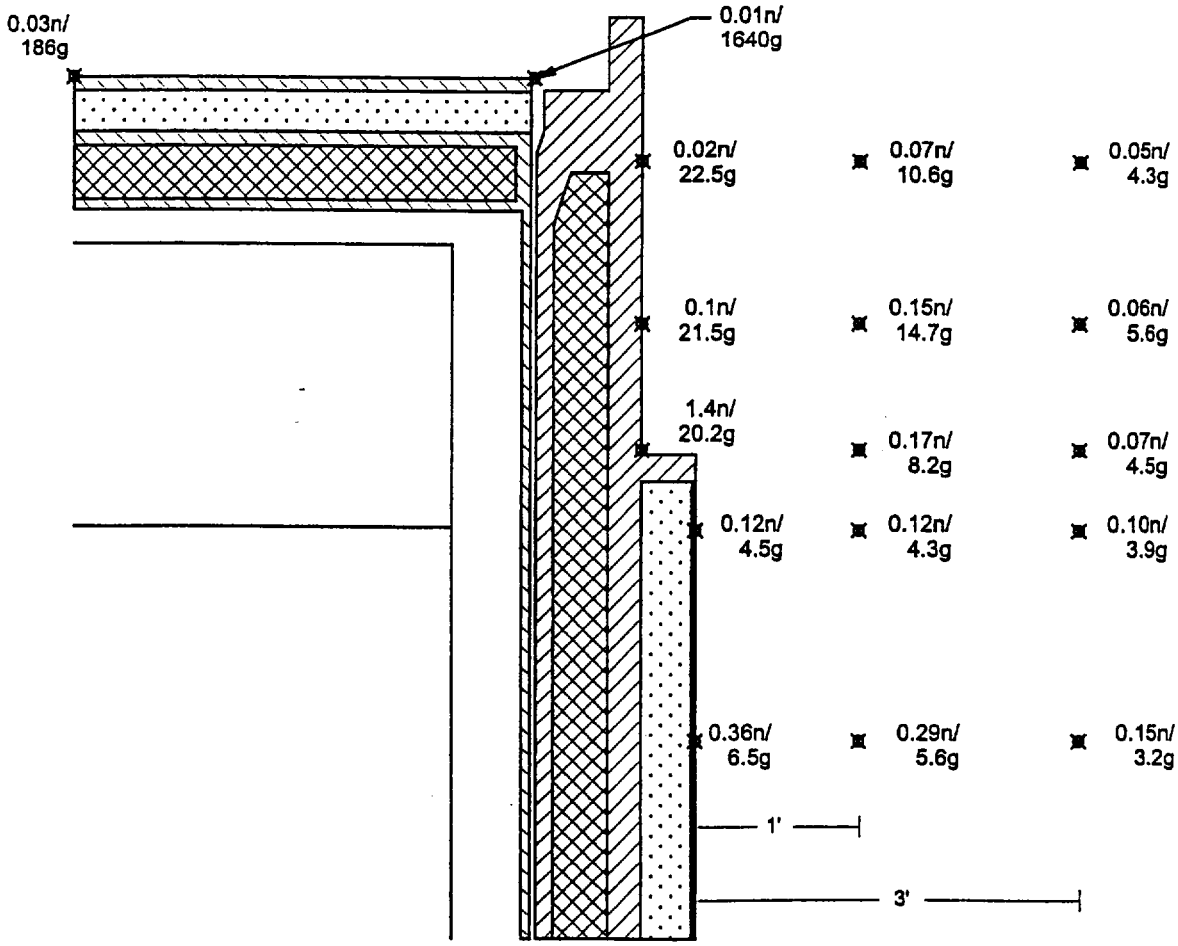

Figure 7-4

Cask Dry Welding Shielding Results (mrem/hr)

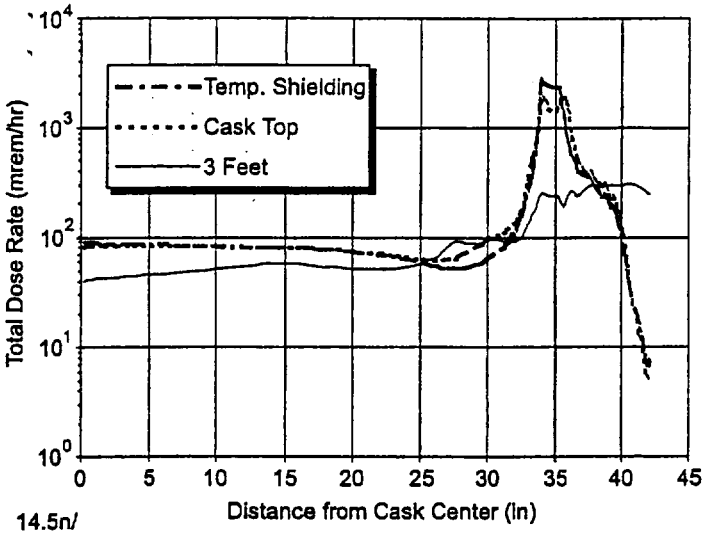

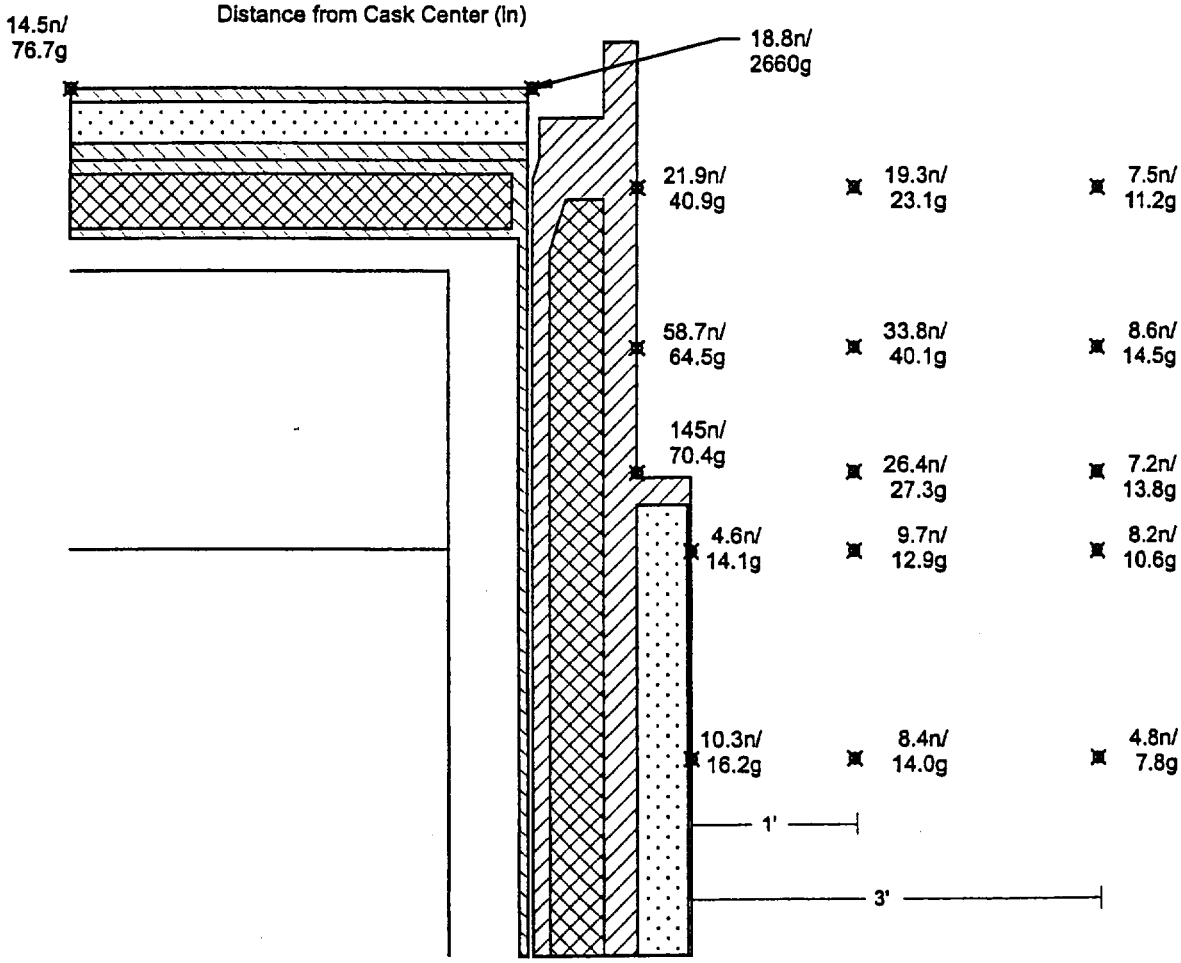

8. ANALYSIS OF CASK TRANSFER DESIGN EVENTS

In previous chapters of this SAR, the features of the Rancho Seco system which are important to safety have been identified and discussed. The purpose of this chapter is to present the engineering analyses for cask transfer normal and off-normal operating conditions, and to establish and qualify the cask for a range of credible and hypothetical accidents which are postulated to occur.

Note:

Initially, the MP-187 cask was intended to be licensed under 10 CFR 72 for storage of a DSC if required to recover from an off-normal event at the ISFSI. Accordingly, much of the original analysis addressed vertical storage of a loaded DSC in the cask at the ISFSI. Although the cask is no longer being licensed for storage under 10 CFR 72, many of the calculational results remain bounding and are still relevant to this SAR revision.

In accordance with NRC Regulatory Guide 3.48 [8.8.1], the design events identified by ANSI/ANS 57.9-1984 [8.8.2] form the basis for the accident analyses performed for the system. Four categories of design events are defined. Design event Types I and II cover normal and off-normal events and are addressed in Sections 8.1, and 8.2. Design event Types III and IV cover a range of postulated accident events and are addressed in Section 8.3. The load combination evaluation of these events, presented in Section 8.4, provides a means of establishing that the system design satisfies the applicable operational and safety acceptance criteria as delineated herein.

8.1 Postulated Cask Storage Operations

Postulated cask storage operating design conditions consist of a set of events that occur regularly, or frequently, in the course of normal storage operation of the NUHOMS®-MP187 cask. The thermal, structural, and radiological analyses associated with these events are presented in the sections which follow.

8.1.1 Cask Thermal Analysis

This section describes the thermal analysis of the Rancho Seco cask. The following evaluations are performed for the Rancho Seco cask for storage conditions:

1. Thermal Analysis of the FO-DSC, FC-DSC, or FF-DSC in the Cask During Transfer

2. Thermal Analysis of the FO-DSC, FC-DSC, or FF-DSC in the Cask During Draining and Drying

3. Thermal Analysis of the FO-DSC, FC-DSC, or FF-DSC in the Cask During Postulated Long Term Storage

The Rancho Seco components are evaluated for a range of design basis ambient temperatures including normal, off-normal, and postulated accident conditions described in Volume II, Section 8.1.1.1.

8.1.1.1 Thermal Analysis of the FO-DSC, FC-DSC, or FF-DSC in the Cask During Transfer Mode

The temperature distribution is calculated for the case when the loaded FO-DSC, FC-DSC, or FF-DSC is in the cask and the cask is being transferred from the fuel storage building to the ISFSI site. The cask is in a horizontal position on the trailer.

The Cask/DSC temperature distribution is calculated using the computer code HEATING7 [8.8.3]. The HEATING7 computer program capabilities are described in the Standardized NUHOMS® SAR [8.8.4]. This same computer code was used in the Standardized NUHOMS®-24P design to calculate the temperature distribution in the HSM and DSC.

Two separate HEATING7 models are developed to determine the radial and circumferential temperature distribution at various composite regions of the cask and DSC shell. The first HEATING7 model is for the bottom half of the cask longitudinal cross-section where the DSC outer surface is assumed to be in contact with the cask inner shell. The second HEATING7 model is for the top half of the cask longitudinal cross-section with a maximum gap between the DSC top outer surface and the cask inner shell. Air is assumed to be present in the gap between the DSC outer surface and cask inner shell when the cask is in a transfer mode from the fuel storage building to the ISFSI site.

The cask is evaluated for a range of ambient temperatures including normal, off-normal, and postulated accident conditions described in Volume II, Section 8.1.1.1. The thermophysical properties of materials used in the thermal analyses of the Rancho Seco system components are identical to the standardized NUHOMS®-24P design [8.8.4] except the effective thermal conductivity of B_4C/NS-3 with stiffeners in the neutron shield cavity is calculated using the "series and parallel" conductor analogy from electrical resistors method.

In the top half model of the cask in the transfer mode, to calculate the DSC outer surface temperature, the convection heat transfer through the air gap is conservatively neglected. The resulting through wall thermal gradients for the cask and DSC shell for the normal and off-normal conditions are summarized in Table 8-1. The results for 101°F cases are not included here because they are bounded by the results presented here. Complete loss of neutron shield with the solid neutron shield material is not a credible event. Therefore, the 117°F accident thermal cases are bounded by the 117°F off-normal case and are not considered further. The resulting temperature gradients are used to perform a thermal stress analysis of the cask as discussed in Section 0.

The resulting temperatures for the DSC outer surface are used to calculate the fuel clad temperatures. The methodology to calculate the maximum clad temperature is similar to that of Volume II, Section 8.1.1.2. The results are summarized in Table 8-2.

The results from Table 8-2 show that the short term fuel clad temperatures during transfer from the fuel storage building to the ISFSI site remain well below the short term clad temperature limit of 570°C.

8.1.1.1.1 FF-DSC Basket Temperature Distribution During Transfer

The FF-DSC inner cavity length, top and bottom shield plug geometries, and the DSC shell outside dimensions are the same as the standardized NUHOMS®-24P DSC design [8.8.4]. The geometry of the basket including spacer disks and the support rods is modified to accommodate a maximum of 13 failed fuel assemblies each enclosed in its own canister.

The methodology similar to the standardized NUHOMS®-24P design [8.8.4] is used for calculating the temperature distribution of the DSC basket spacer disk containing FF assemblies for the Rancho Seco design.

The DSC basket thermal analysis is performed for the -20°F ambient conditions using the corresponding DSC shell temperatures calculated in Section 8.1.1.1. The -20°F ambient condition has the maximum DSC shell temperature gradient as compared to the other ambient temperature cases. The maximum DSC shell temperature gradient will result in a maximum spacer disk temperature gradient.

1. Maximum Fuel Cladding Temperature Based on the results of the DSC basket model for the -20°F ambient temperature case, the maximum fuel cladding temperature is 495°F. For the 70°F long term ambient case and the 117°F ambient off-normal case, the maximum fuel cladding temperatures are 527°F and 546°F respectively. These maximum fuel temperatures are still considerably lower than the short term cladding temperature limit of 1058°F (570°C).

2. Calculation of Spacer Disk Temperature Distribution The DSC spacer disk temperature distribution is calculated using the same methodology as the Standardized NUHOMS®-24P design [8.8.4]. The -20°F ambient temperature case is considered since, the spacer disk temperature gradients for the -20°F ambient temperature will bound the gradients for other ambient temperature cases. The results are included in Volume IV, Calculation NUH005.0452.

8.1.1.2 Rancho Seco FO-DSC, FC-DSC, or FF-DSC in the Cask During Draining and Drying

The methodology used to evaluate the heat transfer effects which occur during transfer of the FO-DSC, FC-DSC or FF-DSC inside the cask from the fuel storage building to the ISFSI, where the DSC is transferred to the HSM for storage. Other conditions during the Rancho

Seco system operations also result in heat transfer effects on the system components. These include placement of the DSC and cask in the RSNGS fuel pool, loading of spent fuel into the DSC, seal welding of the DSC, draining and vacuum drying of the DSC, and backfilling the DSC with helium. Of these conditions, vacuum drying is the most severe since heat conduction in the cavity of the DSC filled with helium is minimized.

8.1.1.2.1 Rancho Seco FO-DSC, or FC-DSC in the Cask During Draining and Drying

An analysis of the FO-DSC and FC-DSC in the cask during the draining and drying operations at the decon area is performed to determine the temperature distribution and the maximum fuel cladding temperatures. The analytical methods used for this analysis are similar to those discussed in Sections 8.1.1.1 and 8.1.1.3. The decon area temperature is assumed to be 100°F. No solar heat load is incident on the cask inside the decon area and the radiation from the cask outside surface is to the concrete wall instead of the ambient air. Air is assumed to be present in the annulus between the DSC outer shell and cask inner shell. The resulting through wall thermal gradients in the cask are bounded by those calculated in Sections 8.1.1.1 and 8.1.1.3 and as such are not evaluated further. The results are summarized in Table 8-3. The resulting temperatures for the DSC outer surface are used to calculate the fuel clad temperatures. The methodology to calculate the maximum clad temperature is similar to that of Volume II, Section 8.1.1.2.

The results from Table 8-4 show that the maximum fuel cladding temperature calculated during draining and drying operations is 998°F (537°C) which is well below the 570°C short term temperature limit.

8.1.1.2.2 Rancho Seco FF-DSC in the Cask During Draining and Drying

The temperature distribution in the DSC shell and the cask calculated with the FO-DSC, or FC-DSC containing 24 intact fuel assemblies can be conservatively assumed to be applicable to the FF-DSC also.

8.1.1.3 Rancho Seco FO-DSC, FC or FF-DSC in the Cask During Postulated Long Term Storage

Thermal analysis is performed for the postulated case when the FO-DSC, FC-DSC, or FF-DSC is in the cask and the cask is in a vertical position on a concrete pad at the Rancho Seco ISFSI site.

Following fabrication, the cask will be subjected to a thermal heat rejection acceptance test. The cask will be supported vertically with an internal heat source capable of producing a minimum of 4.5 kW (maximum of 13.5 kW) supported within the cask cavity. Thermocouples will be attached on the containment shell and the neutron shield shell to record the thermal gradient between the cask cavity and the external surface. Temperatures will be recorded until thermal equilibrium is reached and during cooling without any mechanical cooling present.

8.1.1.3.1 Rancho Seco FO-DSC or FC-DSC in Cask During Postulated Long Term Storage

Helium is assumed to be present in the annulus between the DSC outer shell and cask inner shell. The effect of gaseous impurities in the helium will have no significant effect on the calculated temperatures with the DSC or within the annulus between the DSC outer shell and the cask inner shell. If additional fission gases are added to the helium after the DSC and cask are sealed, the effect on the heat transfer will be negligible. The methodology using HEATING7 computer code is similar to Section 8.1.1.2.

The DSC/cask thermal analysis is performed for the ambient temperature and solar heat fluxes described in Volume II, Section 8.1.1.1.

The resulting temperatures for the cask and DSC shell for the normal and off-normal conditions are summarized in Table 8-5. The results for 101°F cases are not included here because they are bounded by the results presented here. The resulting temperature gradients are used to perform a thermal stress analysis of the cask as discussed in Section 0.

8.1.1.3.2 Rancho Seco FF-DSC in Cask During Postulated Long Term Storage

The DSC shell, cask, and basket spacer disk temperature distribution for this case is bounded by the FF-DSC inside the cask during transfer mode as described in Section 8.1.1.1.

8.1.2 Criticality Analysis

8.1.3 Shielding Analysis

A discussion of the cask normal operation shielding analysis is provided in Section 7.3.2.

8.1.4 Structural Analysis

The normal operating loads for which the cask in its storage mode of operation are analyzed are presented in Table 8-7. The individual load conditions, method of analysis and the analytical results for each normal operating load condition are described in Sections 0 through 0.

8.1.4.1 Dead Weight

The stresses in the system components due to cask dead weight loads are determined for the free-standing cask sitting on the concrete ISFSI pad. A description of the dead weight conditions and the methodology used to evaluate the system components for the cask dead weight condition are presented in the following paragraphs. The cask dead weight stresses in the cask, FO-DSC, FC-DSC and FF-DSC components are summarized in Table 8-8 through Table 8-11, respectively.

1. Cask The effects of dead weight on the cask are evaluated for the cask resting in the vertical upright position on the ISFSI concrete pad. In this orientation the cask is supported over the entire surface to the bottom end. The cask dead weight stresses for this condition are calculated by factoring the 75g bottom end vertical end drop stresses by 1/75. The maximum membrane plus bending and primary plus secondary stress intensities resulting from the vertical dead load, occurring in the cask outer shell and bottom end closure forging, are 0.2 ksi and 0.2 ksi, respectively [8.8.8].

2. FO-DSC, FC-DSC, and FF-DSC The vertical dead weight stresses in the FO-DSC, FC-DSC, and FF-DSC shell assembly and basket assembly components for the vertical cask are the same as the vertical dead weight stresses calculated in Volume I, Section 8.1.1.1. The maximum primary membrane, membrane plus bending and primary plus secondary stress intensities in the FO-DSC, FC-DSC, and FF-DSC shell assembly and basket assembly components for the vertical dead load are shown in Table 8-9 through Table 8-11, respectively.

8.1.4.2 Design Basis Internal Pressure

The range of cask, FO-DSC, FC-DSC, and FF-DSC internal pressures for operating conditions and postulated accident conditions are shown in Volume I, Table 8-2. The DSC and the cask internal pressure, with the fuel cladding intact, for normal operating conditions is a maximum of 17.5 psia (2.8 psig) and 23.0 psia (8.3 psig), respectively, for the seasonal normal operating temperature range of 17°F to 101°F.

A description of the design basis internal pressure loads and the methodology used to evaluate the system components for the internal pressure loads are presented in the following paragraphs. The design basis internal pressure stresses in the cask, FO-DSC, FC-DSC, and FF-DSC components are summarized in Table 8-9 through Table 8-11, respectively.

1. Cask The stresses in the cask components due to the design basis normal operating internal pressure are determined using an axisymmetric finite element model. The model includes the cask inner shell, outer shell, ram access cover plate, bottom end closure forging, top corner forging, top cover plate, lead shielding, neutron shielding, neutron shield jacket and neutron shield support rings. A bounding internal pressure of 10 psig is conservatively applied to the internal surfaces of the cask cavity and the cask stresses calculated. The maximum stresses resulting from the 10 psig internal pressure loading are reported in Table 8-8.

2. FO-DSC, FC-DSC, and FF-DSC The stresses in the FO-DSC, FC-DSC, and FF-DSC shell assembly components due to the design basis internal pressure load are calculated in Volume I, Section 8.1.1.2. The FO-DSC, FC-DSC, and FF-DSC shell assembly stresses due to a 10 psig internal pressure are reported in Table 8-9 through Table 8-11, respectively.

8.1.4.3 Design Basis Thermal Loads

The cask, FO-DSC, FC-DSC, and FF-DSC are analyzed for the bounding normal and off-normal thermal expansion loads associated with all ISFSI transfer and handling conditions in Volume I, Section 8.1.1.3. The thermal stresses in the cask, FO-DSC, FC-DSC, and FF-DSC components due to the bounding normal and off-normal thermal loads are conservatively used for the evaluation of the postulated cask storage conditions. The maximum thermal stresses in the cask, FO-DSC, FC-DSC, and FF-DSC components are reported in Table 8-8 through Table 8-11, respectively.

8.1.4.4 Design Basis Live Loads

Deleted

8.2 Off-Normal Cask Transfer Events

Table 8-12 shows the off-normal operating loads conditions for which the components which are important to safety for the postulated cask storage mode are designed. This section considers design events of the first or second type, as defined in ANSI/ANS 57.9-1984 [8.8.2]. Descriptions of the off-normal events and the analyses performed which demonstrate the adequacy of the system are presented in the following sections.

The off-normal events considered in the evaluation of the system components for the postulated cask storage mode consist of two events which bound the range of off-normal cask storage conditions. The limiting off-normal events are defined as extreme ambient temperatures of -20°F (winter) and 117°F (summer), and extreme internal pressure in the cask and DSC.

8.2.1 Extreme Ambient Temperatures

As described previously, the extreme off-normal ambient temperatures at the Rancho Seco ISFSI are -20°F (extreme winter) and 117°F (extreme summer). Even though these extreme temperatures would likely occur for a short period of time, it is conservatively assumed that these temperatures occur for a sufficient duration to produce steady state temperature distributions in each of the affected components. The system components affected by the postulated extreme ambient temperatures during long term storage in the cask are the cask and the DSC.

8.2.1.1 Postulated Cause of Event

The off-normal thermal loads result from the extreme off-normal ambient temperatures at the Rancho Seco ISFSI, as described in Volume II, Section 8.1.1.1.

8.2.1.2 Detection of Event

No additional means are necessary to detect off-normal thermal loads.

8.2.1.3 Analysis of Effects and Consequences

The off-normal thermal gradients are conservatively used for the design basis thermal evaluation presented in Section 0. Therefore, the stresses in the various system components due to the off-normal temperatures are equal to the design basis thermal stresses reported in Table 8-8 through Table 8-11.

8.2.1.4 Corrective Actions

No corrective actions are necessary to return the system to normal conditions in the event of extreme ambient conditions.

8.2.2 Off-Normal Pressure Loads

As described previously, the extreme off-normal internal pressure load in both the DSC and cask due to the extreme off-normal ambient temperatures are 17.7 psia (3.0 psig) and 23.7 psia (9.0 psig), respectively . The system components affected by the postulated off-normal pressure loads are the cask and the DSC.

8.2.2.1 Postulated Cause of Event

The off-normal pressure loads result from the extreme off-normal ambient temperatures at the Rancho Seco ISFSI, as described in Volume I, Section 8.1.1.3.

8.2.2.2 Detection of Event

No additional means are necessary to detect off-normal pressure loads.

8.2.2.3 Analysis of Effects and Consequences

The stresses in the various system components due to the off-normal internal pressure loads are calculated in the same manner as described for the normal internal pressure loads, as described in Section 0. The maximum stresses in the cask and DSC due to the bounding 10 psig internal pressure loads are equal to those calculated in Section 0 and shown in Table 8-8 through Table 8-11.

8.2.2.4 Corrective Actions

No corrective actions are necessary to return the system to normal conditions in the event of extreme ambient conditions.

8.3 Postulated Cask Storage Accidents

Table 8-13 shows the accident load conditions for which the components which are important to safety for cask storage mode are designed. This section considers design events of the third and fourth type, as defined in ANSI/ANS 57.9-1984 [8.8.2]. Descriptions of the accident events and the analyses performed which demonstrate the adequacy of the system are presented in the following sections.

The accident events considered in the evaluation of the system components for cask transfer and handling modes include:

1. Tornado winds and tornado generated missiles.
2. Design basis earthquake.
3. Design basis flood.
4. Lightning effects.

For each postulated condition, the accident cause, the structural, thermal, and radiological consequences, and the recovery measures required to mitigate the accident are presented.

8.3.1 Tornado Winds/Tornado Missiles

The cask and DSC are analyzed for tornado effects in accordance with ANSI-57.9 [8.8.2] and 10 CFR 72.122. The effects of both tornado wind and tornado generated missiles are considered.

8.3.1.1 Postulated Cause of Event

In accordance with ANSI-57.9 and 10CFR72.122, the HSM and cask are designed for tornado effects including tornado wind loads. In addition, the HSM and cask are also designed for tornado missile effects, although not specifically required by ANSI-57.9 and 10CFR72.122. For this conservative evaluation, the most severe tornado wind loadings specified by NUREG-0800 and NRC Regulatory Guide 1.76 were selected as a design basis for this postulated accident.

8.3.1.2 Detection of Event

No additional means or methods are required to be provided to the detection of the postulated tornado event.

8.3.1.3 Analysis of Effects and Consequences

The applicable design parameters for the design basis tornado (DBT) are specified in Volume I, Section 3.2.1. Stability and stress analyses are performed for the cask for the postulated

tornado wind and tornado missile loads. The bounding stress results from the tornado wind and tornado missile stress analyses are reported in Table 8-14.

The radiological consequences of the postulated tornado wind and tornado missile loads include the potential of reduced shielding due to local deformation or loss of the cask neutron shield.

1. Cask Overturning Analysis Analyses are performed to ensure the overturning stability of the cask in the storage mode for the postulated tornado wind and tornado missile loads. The cask overturning moments are calculated using conservative static methods identical to those used in the Standardized NUHOMS® SAR [8.8.4].

   The overturning moment due to the tornado wind load is calculated for the combined 397 psf pressure load on the windward side and 196 psf pressure load on the leeward side, conservatively applying the combined pressure load uniformly over the entire projected area of the cask. The overturning moment due to the tornado wind drag force is 5,995 in-kips. The stabilizing moment for the cask in the vertical storage position is 9,749 in-kips. The margin of safety against overturning due to the postulated tornado wind load is 63%.

   The overturning stability of the cask for the tornado missile load is controlled by the massive missile impact. The massive missile load is applied at the top of the cask for the vertical storage condition. Using conservation of momentum principles, the initial rotational velocity of the cask, assuming pure rotation, is calculated to be 0.488 radians per second. Equating the initial kinetic energy of the cask/missile system to the increase in potential energy due to the increase in the cask center of gravity due to the angular rotation about the edge of the cask bottom end closure forging, the angle of rotation due to the massive missile impact is 8.2°. The angle of rotation at which the cask will tip over is 22.8° from vertical. Therefore, the cask will not overturn for the worst case tornado missile loading.

2. Cask Penetration Resistance Analysis The cask is evaluated for the effects of a 276 pound, 8 inch diameter missile, travelling at a velocity of 126 mph (2,218 in/sec.) to ensure resistance to penetration. The thickness of the cask outer shell required to resist penetration, calculated using Nelms' equation for a lead-backed shell [8.8.5], is 0.52 inches. Therefore, the 2.50 inch thick cask outer shell is adequate to resist penetration due to the cask penetration resistance missile.

   Cask Tornado Wind Stress Analysis The local stresses in the cask outer shell are conservatively calculated for a closed end cylinder subjected to a uniform line load acting along the entire length of the cask, assuming simply supported end conditions. The resulting primary membrane and membrane plus bending stress intensities in the cask outer shell are 0.5 ksi and 1.7 ksi, respectively.

No significant stresses result in any other cask components due to the tornado wind loads.

3. Cask Tornado Missile Stress Analysis The stresses in the cask components due to the tornado missile loads are determined using hand calculations. The cask outer shell stresses due to the massive missile impact load are calculated for the cask in the horizontal position secured to the on-site transfer skid and trailer. An equivalent static load is calculated for the massive missile impact using energy balance methods. The equivalent static impact force, including a dynamic load factor of 2.0, is 40,948 pounds. The cask outer shell stresses are conservatively calculated for closed end cylinder, simply supported at the ends, with a concentrated load at the cask mid-length. The resulting maximum membrane and membrane plus bending stress intensities in the cask outer shell are 1.4 ksi and 4.6 ksi, respectively.

   The bottom end closure forging is analyzed as a simply supported annular plate subjected to a uniform pressure load acting over the outer surface area and an annular line load at its inner radius. The maximum bending stresses in the bottom end closure forging is and 0.5 ksi.

   The cask outer shell stresses resulting from the postulated penetration resistance missile are determined using hand calculations. The equivalent static impact force due to the penetration resistance missile is calculated using impulse-momentum relationships. Assuming a dynamic load factor of 2.0, the equivalent static impact force is calculated as 63.3 kips. The primary membrane and membrane plus bending stress intensities in the cask outer shell due to the penetration resistance missile, calculated using methodology similar to that used for the massive missile impact stress analysis, are 5.7 ksi and 20.8 ksi, respectively.

   The bending stresses in the top cover plate and ram access cover plate due to the penetration resistance missile impact are calculated for simply supported circular plates. The 63.3 kip impact force is applied as a uniform pressure load over a 8.0 inch diameter at the center of the plates. The maximum bending stress in the top cover plate and ram access cover plate are 2.8 ksi and 2.9 ksi, respectively.

   The bending stress in the bottom end closure forging resulting from the penetration missile impact at the center of the ram access cover plate is calculated for a simply supported annular plate subjected to an annular line load at its inner edge. The bending stress in the bottom end closure forging due to the annular line load is 2.1 ksi.

8.3.1.4 Corrective Actions

As demonstrated by analysis, the cask is designed to withstand the tornado wind and tornado missile loads without damage to the containment structure. In the event of a

tornado generated missile striking the cask neutron shield a visual inspection shall be performed to assess the extent of damage. In the event that damage to the neutron shield is detected which effects the cask radiological behavior, the DSC can be transferred to a HSM and the damaged cask then repaired.

8.3.2 Earthquake

As discussed in Volume I, Section 3.2.3, the cask and DSC are analyzed for the enveloping design basis earthquake for the cask storage mode.

8.3.2.1 Postulated Cause of Event

As discussed in Section 3.2.3.1 of the Standardized NUHOMS® SAR [8.8.4], enveloping design basis seismic forces are assumed to act on the system components. For this conservative evaluation, the design response spectra of NRC Regulatory Guide 1.60 were selected for the seismic analysis of the system components.

8.3.2.2 Detection of Event

No additional means or methods are required to be provided to the detection of the design basis seismic event.

8.3.2.3 Analysis of Effects and Consequences

The seismic input criteria and analysis methodology are described in Sections 3.2.3.1 and 3.2.3.2 of Volume I. Stability and stress analyses are performed for the cask in the storage modes for the postulated design basis earthquake loads.

1. Cask Overturning Analysis Analyses are performed to ensure the overturning stability of the cask in the storage mode for the postulated seismic loads. The cask overturning moments are calculated using conservative static methods as discussed in Volume I, Section 3.2.3.2. The results of the seismic stability analysis show a minimum margin of safety against overturning of 38% for the cask in the vertical storage position. Therefore, overturning due to the design basis seismic accelerations will not occur. However, to minimize the impact loads in the event of a postulated tipover, an impact limiter will be attached to the top end of the cask during vertical storage. The impact limiter is a cylindrical section which fits over the top of the cask with an outside diameter of 128 inches. The limiter is 20.7 inches tall. Use of the limiter will reduce the worst case tipover peak acceleration to 30.7 g, which is less than the 75 g acceleration resulting from the 80 inch drop evaluation.

2. Seismic Stress Analysis The stresses in the cask, FC-DSC, FO-DSC and FF-DSC due to the design basis seismic event for the cask storage mode are bounded by those calculated for the ISFSI conditions discussed in Volume I, Section 8.2.4.3. Therefore, the bounding seismic stress results are conservatively used for the cask

storage evaluation. The DSC shell assembly seismic stresses are reported in Table 8-15 through Table 8-17.

8.4.2.4 Corrective Actions

No corrective actions are required in the event of an earthquake.

8.3.3 Flood

The accident flood event is postulated to occur for the cask transfer mode at the ISFSI.

8.3.3.1 Postulated Cause of Event

As discussed in Section 8.2.4.1 of the Standardized NUHOMS® SAR [8.8.4], flooding conditions simulating a range of flood types, such as tsunami and seiches as specified in 10CFR72.122(b). In addition, floods resulting from other sources, such as high water from a river or a broken dam, are postulated as the cause of the accident.

8.3.3.2 Detection of Event

No additional means or methods are required to be provided to the detection of the flooding event.

8.3.3.3 Analysis of Effects and Consequences

The stresses in the DSC due to the 50 foot flood head are evaluated below.

Flood Stress Analysis The stresses in the cask and DSC shell assembly components due to the 50 foot flood water head are analyzed using finite element models. The finite element model used to analyze the cask for the flood load is discussed in Volume IV, Calculation 2069.0203, Appendix B. The 21.7 psi hydrostatic flood pressure is applied to the external surfaces of the cask model, conservatively assuming no cask internal pressure load. The resulting cask flood stresses are reported in Table 8-14.

The stresses in the DSC shell assembly are reported in Table 8-15 through Table 8-17. The design basis for the Rancho Seco DSC is the same as that for the Standardized NUHOMS®-24P DSC shell assembly (refer to Section 8.2.4.2(B) of the Standardized NUHOMS® SAR).

As discussed in the Standardized NUHOMS® SAR [8.8.4], the DSC is evaluated for the design basis fifty foot hydrostatic head of water producing external pressure on the DSC shell and outer cover plates. To conservatively determine design margin which exists for this condition, the maximum allowable external pressure on the DSC shell is calculated for Service Level A stresses using the methodology presented in NB 3133.3 of the ASME Code. The resulting allowable pressure of 63.6 psi is 2.9 times the maximum external pressure of 21.7 psi due to the postulated fifty foot flood

height. Therefore, buckling of the DSC shell will not occur under the worst case external pressure due to flooding.

The DSC shell stresses for the postulated flood condition are determined using the ANSYS analytical model shown in Figure 8.1-14 of the Standardized NUHOMS® SAR. The 21.7 psig external pressure is applied to the model as a uniform pressure on the outer surfaces of the top cover plate, DSC shell and bottom cover plate. The maximum DSC shell primary membrane stress intensity for the 21.7 psi external pressure is 1.2 ksi which is considerably less than the Service Level C allowable primary membrane stress of 21.0 ksi. The maximum stress in the flat heads of the DSC occurs in the bottom cover plate. The maximum membrane plus bending stress in the bottom cover plate is 0.4 ksi. This value is considerably less than the ASME Service Level C allowable of 29.1 ksi for primary bending. These stresses are combined with the appropriate loads to formulate load combinations. The resulting total stresses for the DSC are reported in Section 8.2.10 of the Standardized NUHOMS® SAR.

8.3.3.4 Corrective Actions

No corrective actions are required in the event of an flood.

8.3.4 Accident Pressurization

Refer to Volume I, Section 8.2.3.3.

8.3.5 Lightning

The description of the event, cause of event, analysis of effects, consequences of event and corrective actions are discussed in the Standardized NUHOMS® SAR [8.8.4] for storage in the HSM.

Should lightning strike in the vicinity of the HSM the normal storage operations of the HSM will not be affected. The current discharged by the lightning will follow the low impedance path offered by the surrounding structures. Therefore, the HSM will not be damaged by the heat or mechanical forces generated by current passing through the higher impedance concrete. Since the HSM requires no equipment for its continued operation, the resulting current surge from the lightning will not affect the normal operation of the HSM.

Since no off-normal condition will develop as the result of lightning striking in the vicinity of the HSM, no corrective action would be necessary. Also, there would be no radiological consequences.

8.4 Cask Storage Load Combination Evaluation

8.4.1 DSC Load Combination Evaluation

The bounding FO-DSC, FC and FF-DSC load combinations for all modes of operations are presented in Section 8.3.1 of Volume I. Detailed load combination evaluations for the postulated cask storage conditions are included in the calculation packages in Volume IV.

8.4.2 Cask Load Combination Evaluation

The bounding cask load combinations for all modes of operations are presented in Section 8.3.2 of Volume I. Detailed load combination evaluations for the postulated cask storage conditions are included in Volume IV, Calculation 2069.0203.

8.4.3 Summary of Design Requirements Met

A summary of the design requirements met for the bounding postulated storage and handling modes is included in Volume I, Section 8.3.3.

8.5 Site Characteristics Affecting Safety Analysis

All site characteristics affecting the safety analysis of the Rancho Seco system are noted throughout this SAR where they apply.

8.6 References

8.1 U.S. Nuclear Regulatory Commission (U.S. NRC), "Standard Format and Content for the Safety Analysis Report for an Independent Spent Fuel Storage Installation (Dry Storage)," Regulatory Guide 3.48, (August 1989).

8.2 American National Standard, "Design Criteria for an Independent Spent Fuel Storage Installation (Dry Storage Type)," ANSI/ANS 57.9-1984, American Nuclear Society, La Grange Park, Illinois (1984).

8.3 "HEATING7: A Multidimensional Heat Conduction Analysis with the Finite Difference Formulation," NUREG/CR-0200, Volume 2, Section F10, October 1981.

8.4 "Safety Analysis Report for the Standardized NUHOMS® Horizontal Modular Storage System for Irradiated Nuclear Fuel," NUH-003, Revision 4A, VECTRA Technologies, Inc., June 1996.

8.5 H. A. Nelms, "Structural Analysis of Shipping Casks, Effects of Jacket Physical Properties and Curvature and Puncture Resistance," Volume 3, ORNL TM-1312, Oak Ridge National Laboratory, Oak Ridge Tennessee, June 1986.

8.6 S. I. Levy, et al, "Recommended Temperature Limits for Dry Storage of Spent Light Water Reactor Zircaloy-Clad Fuel Rods in Inert Gas," PNL-6189, May 1987.

8.7 A. B. Johnson Jr. and E. R. Gilbert, "Technical Basis for Storage of Zircaloy-Clad Spent Fuel in Inert Gases," PNL-4835, September 1983.

Reference Calculations

8.8 NUHOMS®-MP187 Cask 10 CFR 72 Structural Analysis, PNFS Calculation Number 2069.0203, Revision 2.

Table 8-1

Cask Thermal Analysis Results for Transfer Mode

Cases	Max DSC Shell Radial Temp (°F)	Max Cask Inner Shell Temp (°F)	Max NS3 In/Out Temp (°F)	Max Top Seal Temp (°F)	Max Bottom Seal Temp (°F)
CASE 1-A: 70°F Amb Top Half of Cask	399	238	196/176	163	166
CASE 1-B: 70°F Amb Bottom Half of Cask	245	217	172/152	141	127
CASE 2-A: 117°F Amb Top Half of Cask	423	278	239/221	207	208
CASE 2-B: 117°F Amb Bot Half of Cask	282	255	212/192	181	168
CASE 3-A: -20°F Amb Top Half of Cask	344	142	93/74	64	68
CASE 3-B: -20°F Amb Bottom Half of Cask	177	146	96/76	65	47
CASE 4-A: FF DSC, -20°F Amb Top Half of Cask	281	105	68/54	47	50
CASE 4-B: FF DSC, -20°F Amb Bottom Half of Cask	133	109	70/56	48	33

Table 8-2

Maximum Fuel Cladding Temperature During Transfer

Rancho Seco ISFSI Design		
DSC in Cask		
Maximum DSC Temp (°F)	Maximum Clad Temp (°F)	Clad Temp Limit (°F/°C)
423	746	1058/570

Table 8-3

Cask Thermal Analysis Results

During Draining and Drying in Decon Area

Max DSC Shell Radial Temp (°F)	Cask Inner Shell Temp (°F)	Max NS3 In/Out Temp (°F)	Max Top Seal Temp (°F)	Max Bot Seal Temp (°F)
383	239	196/176	164	236

Table 8-4

Maximum Fuel Cladding Temperature Comparison

During Draining and Drying in Cask

Rancho Seco ISFSI Design		
Maximum DSC Temp (°F)	Estimated Maximum Clad Temp (°F)	Clad Temp Limit (°F/°C)
383	998	1058/570

Table 8-5

Cask Thermal Analysis Results During Long Term Storage

Deleted

Table 8-6

Maximum Fuel Cladding Temperature During Long Term Storage

Deleted

Table 8-7

Postulated Cask Storage Normal Operating Loading Summary

Load Type	Section Reference	Affected Component		
		Cask	DSC Shell Assembly	DSC Internals
Dead Weight	0	X	X	X
Internal Pressure	0	X	X	
Normal Thermal	0	X	X	X
Live Loads	0	X		

Table 8-8

Postulated Normal Cask Storage Condition Stress Intensities

Cask Component	Stress Type	Stress (ksi)[1]		
		Dead Weight	Internal Pressure	Thermal
Inner Shell	Primary Membrane	0.1	0.1	N/A
	Membrane + Bending	0.1	0.1	N/A
	Primary + Secondary	0.1	0.2	14.3
Outer Shell	Primary Membrane	0.1	0.1	N/A
	Membrane + Bending	0.2	0.1	N/A
	Primary + Secondary	0.2	0.3	13.9
Top Corner Forging	Primary Membrane	0.0	0.1	N/A
	Membrane + Bending	0.0	0.1	N/A
	Primary + Secondary	0.1	0.2	12.3
Bottom End Closure Forging	Primary Membrane	0.1	0.1	N/A
	Membrane + Bending	0.1	0.3	N/A
	Primary + Secondary	0.2	0.3	10.1

Notes:

1. Values shown are maximum irrespective of location.

Table 8-9

FO-DSC Postulated Normal Cask Storage Condition Stress Results

FO-DSC Component	Stress Type	Stress (ksi)[1]		
		Dead Weight	Internal Pressure	Thermal
Shell	Primary Membrane	0.1	1.6	N/A
	Membrane + Bending	0.3	3.4	N/A
	Primary + Secondary	0.3	9.7	32.2
Outer Top Cover Plate	Primary Membrane	0.02	2.1	N/A
	Membrane + Bending	0.04	7.1	N/A
	Primary + Secondary	0.04	6.3	23.9
Inner Top Cover Plate	Primary Membrane	0.0	0.9	N/A
	Membrane + Bending	0.03	4.5	N/A
	Primary + Secondary	0.03	3.4	24.9
Outer Bottom Cover Plate	Primary Membrane	0.0	0.4	N/A
	Membrane + Bending	0.0	0.7	N/A
	Primary + Secondary	0.0	0.5	30.3
Inner Bottom Cover Plate	Primary Membrane	0.0	0.3	N/A
	Membrane + Bending	0.0	0.8	N/A
	Primary + Secondary	0.0	0.8	28.0
Spacer Disc	Primary Membrane	0.0[2]	N/A	N/A
	Membrane + Bending	11.6[2]	N/A	N/A
	Primary + Secondary	14.2[2]	N/A	42.6
Support Rods	Primary Membrane	31.8	N/A	N/A
	Membrane + Bending	N/A	N/A	N/A
	Primary + Secondary	N/A	N/A	15.4
Guide Sleeves	Primary Membrane	0.1	N/A	N/A
	Membrane + Bending	0.1	N/A	N/A
	Primary + Secondary	N/A	N/A	0.0
Support Ring	Primary Membrane	0.2	0.5	N/A
	Membrane + Bending	0.2	0.5	N/A
	Primary + Secondary	0.2	0.5	5.2

Notes:

1. Values shown are maximum irrespective of location.
2. These stresses were conservatively computed assuming that the guide sleeves remain attached to the bottom spacer disc.

Table 8-10

FC-DSC Postulated Normal Cask Storage Condition Stress Results

FC-DSC Component	Stress Type	Stress (ksi)[1]		
		Dead Weight	Internal Pressure	Thermal
Shell	Primary Membrane	0.1	1.6	N/A
	Membrane + Bending	0.3	3.4	N/A
	Primary + Secondary	0.3	9.7	32.2
Outer Top Cover Plate	Primary Membrane	0.0	2.1	N/A
	Membrane + Bending	0.3	7.1	N/A
	Primary + Secondary	0.3	6.3	23.9
Inner Top Cover Plate	Primary Membrane	0.0	0.9	N/A
	Membrane + Bending	0.2	4.5	N/A
	Primary + Secondary	0.2	3.4	24.9
Outer Bottom Cover Plate	Primary Membrane	0.02	0.07	N/A
	Membrane + Bending	0.15	0.68	N/A
	Primary + Secondary	0.15	0.68	17.8
Inner Bottom Cover Plate	Primary Membrane	0.01	0.40	N/A
	Membrane + Bending	0.38	15.0	N/A
	Primary + Secondary	0.38	15.0	28.0
Spacer Disc	Primary Membrane	0.0[2]	N/A	N/A
	Membrane + Bending	11.6[2]	N/A	N/A
	Primary + Secondary	14.2[2]	N/A	42.6
Support Rods	Primary Membrane	31.8	N/A	N/A
	Membrane + Bending	N/A	N/A	N/A
	Primary + Secondary	N/A	N/A	15.4
Guide Sleeves	Primary Membrane	0.1	N/A	N/A
	Membrane + Bending	0.1	N/A	N/A
	Primary + Secondary	N/A	N/A	0.0
Support Ring	Primary Membrane	0.1	0.5	N/A
	Membrane + Bending	0.2	0.5	N/A
	Primary + Secondary	0.2	0.5	5.2

Notes:

1. Values shown are maximum irrespective of location.
2. These stresses were conservatively computed assuming that the guide sleeves remain attached to the bottom spacer disc.

Table 8-11

FF-DSC Postulated Normal Cask Storage Condition Stress Results

FF-DSC Component	Stress Type	Stress (ksi)[1]		
		Dead Weight	Internal Pressure	Thermal
Shell	Primary Membrane	0.1	1.6	N/A
	Membrane + Bending	0.3	3.4	N/A
	Primary + Secondary	0.3	9.7	32.2
Outer Top Cover Plate	Primary Membrane	0.3	2.1	N/A
	Membrane + Bending	0.3	7.1	N/A
	Primary + Secondary	0.0	6.3	23.9
Inner Top Cover Plate	Primary Membrane	0.2	0.9	N/A
	Membrane + Bending	0.2	4.5	N/A
	Primary + Secondary	0.0	3.4	24.9
Outer Bottom Cover Plate	Primary Membrane	0.02	0.07	N/A
	Membrane + Bending	0.15	0.68	N/A
	Primary + Secondary	0.15	0.68	0.3
Inner Bottom Cover Plate	Primary Membrane	0.01	0.4	N/A
	Membrane + Bending	0.38	15.0	N/A
	Primary + Secondary	0.38	15.0	2.3
Spacer Disc	Primary Membrane	0.0	0.0	N/A
	Membrane + Bending	0.4	0.0	N/A
	Primary + Secondary	N/A	0.0	27.2
Support Plates	Primary Membrane	0.1	0.0	N/A
	Membrane + Bending	0.4	0.0	N/A
	Primary + Secondary	N/A	0.0	0.0
Fuel Body Can	Primary Membrane	0.0	0.0	N/A
	Membrane + Bending	0.1	0.0	N/A
	Primary + Secondary	N/A	0.0	0.0

Notes:

1. Values shown are maximum irrespective of location.

Table 8-12

Cask Storage Off-Normal Loading Summary

Deleted

Table 8-13

Postulated Cask Storage Accident Loading Summary

Load Type	Section Reference	Affected Component		
		Cask	DSC Shell Assembly	DSC Internals
Tornado Wind	8.3.1	X		
Tornado Missile	8.3.1	X		
Earthquake	8.3.2	X	X	X
Flood	8.3.3	X	X	
Pressurization	8.3.4	X	X	X
Lightning	8.3.5	X		
Off-Normal Thermal	8.2.1	X	X	X

Table 8-14

Postulated Cask Storage Accident Condition Cask Stress Intensities

Cask Component	Stress Type	Stress (ksi)[1]			
		Tornado Winds/ Tornado Missiles	Earthquake	Flood	Accident Pressure
Inner Shell	Primary Membrane	3.8	1.5	0.2	0.5
	Membrane + Bending	14.4	1.5	0.3	0.5
Outer Shell	Primary Membrane	5.7	3.4	0.2	0.5
	Membrane + Bending	20.8	3.4	0.2	0.5
Top Cover Plate	Primary Membrane	0.0	0.0	0.1	0.5
	Membrane + Bending	2.8	0.1	0.7	2.0
Top Corner Forging	Primary Membrane	0.0	1.5	0.3	0.5
	Membrane + Bending	0.0	1.5	1.0	0.5
Bottom End Closure Forging	Primary Membrane	0.0	1.5	0.3	0.5
	Membrane + Bending	2.1	2.1	0.7	1.5
Ram Access Cover Plate	Primary Membrane	0.0	0.0	0.1	0.0
	Membrane + Bending	2.9	0.1	0.3	0.5

Notes:

1. Values shown are maximum irrespective of location.

Table 8-15

Postulated Cask Storage Accident Condition FO-DSC Stress Results

FO-DSC Component	Stress Type	Stress (ksi)[1]		
		Earthquake	Flood	Accident Pressure
Shell	Primary Membrane	0.1[3]	1.3	5.2
	Membrane + Bending	0.3[3]	2.4	15.0
Outer Top Cover Plate	Primary Membrane	0.02[3]	0.3	7.3
	Membrane + Bending	0.04[3]	0.6	41.2
Inner Top Cover Plate	Primary Membrane	0.00[3]	0.3	6.6
	Membrane + Bending	0.03[3]	0.6	18.5
Outer Bottom Cover Plate	Primary Membrane	0.0	0.3	6.3
	Membrane + Bending	0.0	0.5	25.1
Inner Bottom Cover Plate	Primary Membrane	0.0	1.0	1.7
	Membrane + Bending	0.0	1.4	3.7
Spacer Disc	Primary Membrane	0.0[2]	N/A	N/A
	Membrane + Bending	11.6[2]	N/A	N/A
Support Rods	Primary Membrane	31.8	N/A	N/A
	Membrane + Bending	N/A	N/A	N/A
Guide Sleeves	Primary Membrane	0.1	N/A	N/A
	Membrane + Bending	0.1	N/A	N/A

Notes:

1. Values shown are maximum irrespective of location.
2. These stresses were conservatively computed assuming that the guide sleeves remain attached to the bottom spacer disc.
3. These stresses are based on the assumption that the cask will not tip-over. Stresses due to dead weight are conservatively used.

Table 8-16

Postulated Cask Storage Accident Condition FC-DSC Stress Results

FC-DSC Component	Stress Type	Stress (ksi)[1]		
		Earthquake	Flood	Accident Pressure
Shell	Primary Membrane	0.1[3]	1.3	5.2
	Membrane + Bending	0.3[3]	2.4	15.0
Outer Top Cover Plate	Primary Membrane	0.02[3]	0.3	7.3
	Membrane + Bending	0.04[3]	0.6	41.2
Inner Top Cover Plate	Primary Membrane	0.00[3]	0.3	6.6
	Membrane + Bending	0.03[3]	0.6	18.5
Outer Bottom Cover Plate	Primary Membrane	0.02	0.16	0.37
	Membrane + Bending	0.15	1.49	3.39
Inner Bottom Cover Plate	Primary Membrane	0.01	N/A	N/A
	Membrane + Bending	0.38	N/A	N/A
Spacer Disc	Primary Membrane	0.0[2]	N/A	N/A
	Membrane + Bending	11.6[2]	N/A	N/A
Support Rods	Primary Membrane	31.8	N/A	N/A
	Membrane + Bending	N/A	N/A	N/A
Guide Sleeves	Primary Membrane	0.1	N/A	N/A
	Membrane + Bending	0.1	N/A	N/A

Notes:

1. Values shown are maximum irrespective of location.
2. These stresses were conservatively computed assuming that the guide sleeves remain attached to the bottom spacer disc.
3. These stresses are based on the assumption that the cask will not tip-over. Stresses due to dead weight are conservatively used.

Table 8-17

Postulated Cask Storage Accident Condition FF-DSC Stress Results

FF-DSC Component	Stress Type	Stress (ksi)[1]		
		Earthquake	Flood	Accident Pressure
Shell	Primary Membrane	0.1[2]	1.3	5.2
	Membrane + Bending	0.3[2]	2.4	15.0
Outer Top Cover Plate	Primary Membrane	0.02[2]	0.3	7.2
	Membrane + Bending	0.04[2]	0.6	41.2
Inner Top Cover Plate	Primary Membrane	0.00[2]	0.3	6.6
	Membrane + Bending	0.03[2]	0.6	18.5
Outer Bottom Cover Plate	Primary Membrane	0.02	0.16	0.37
	Membrane + Bending	0.15	1.49	3.39
Inner Bottom Cover Plate	Primary Membrane	0.01	N/A	N/A
	Membrane + Bending	0.38	N/A	N/A
Spacer Disc	Primary Membrane	4.0	N/A	N/A
	Membrane + Bending	4.0	N/A	N/A
Support Plates	Primary Membrane	0.0	N/A	N/A
	Membrane + Bending	0.4	N/A	N/A
Fuel Cans	Primary Membrane	0.4	N/A	N/A
	Membrane + Bending	0.4	N/A	N/A

Notes:

1. Values shown are maximum irrespective of location.
2. These stresses are based on the assumption that the cask will not tip-over. Stresses due to dead weight are conservatively used.

Table 8-18

Cask Cavity Pressure (Including DSC Leakage After Placement in Storage)

Deleted

9. CONDUCT OF OPERATIONS

The organization and general plans for operating the Rancho Seco ISFSI are provided in Volume I, Chapter 9.

9.1 Physical Security Plan and Physical Protection Plan

The Rancho Seco Long Term Defueled Condition (LTDC) Physical Security Plan describes the overall security policies and outlines the specific criteria to be followed by all individuals entering the Industrial and Protected Areas of the RSNGS. The Contingency Plan is included in the Security Plan as Addendum A.

The ISFSI Physical Protection Plan (PPP) describes the security provisions for protecting Rancho Seco's spent fuel after placing the fuel into dry storage at the ISFSI. The PPP was developed in accordance with the guidance in NUREG-1619, 10 CFR 73.51, 10 CFR 72 Subpart H, and the applicable portions of 10 CFR 73 and 10 CFR 73 Appendix B. The Contingency Response Plan is included as Chapter 10 of the Physical Protection Plan.

The general performance objective of these security plans is to provide high assurance that activities involving spent nuclear fuel do not constitute an unreasonable risk to public health and safety. To achieve this objective, these security plans provide for the following performance capabilities:

1. Spent fuel is stored only within a protected area.
2. Only authorized individuals are granted access to the protected area.
3. The security systems have the ability to detect and assess unauthorized entry to, or activities within, the protected area.
4. The security systems have the ability to provide timely communications to a designated response force whenever necessary.
5. The security organization is managed in a manner that maintains its effectiveness.

Contingencies: The Contingency Plan associated with either of these security plans addresses specific actions to be taken in the event of:

1. Threats (Bomb/Attack)
2. Civil Disturbance
3. Actual or Attempted Sabotage
4. Fire Explosion or Catastrophe

5. Attempted Theft (Theft of Nuclear Material)

6. Security Emergencies

10. OPERATING CONTROLS AND LIMITS FOR CASK STORAGE

10.1 Proposed Operating Controls and Limits

Deleted

10.2 Development of Operating Controls and Limits

Deleted

10.3 Operating Control and Limit Specifications

Deleted

Table 10-1

Areas Where Controls and Limits Are Specified

Deleted

11. QUALITY ASSURANCE

Quality Assurance for the Rancho Seco ISFSI is described in Volume I, Chapter 11.

Rancho Seco

Independent Spent Fuel Storage Installation

Final Safety Analysis Report
Appendix A
ASME Code Exception List

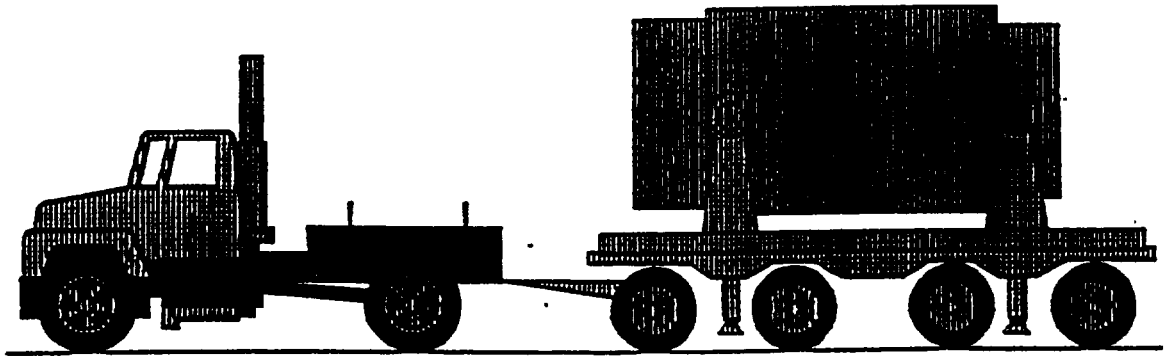

SMUD
Sacramento Municipal Utility District

APPENDIX A

ASME Code Exceptions for the MP187 Cask and FO, FC, and FF DSC's

This Code exception report is prepared to document and provide justifications for all deviations from the ASME Code Section III, Division 1 requirements. The MP187 cask and the associated FO, FC, and FF DSC's are non-stamped Code vessels. The design of these components is required to meet the technical provisions of the Code.

The following sections of the ASME Code apply to the technical requirements for fabrication of the MP187 cask and the associated DSC's:

- Section II for materials.
- Section III for materials, design, fabrication, testing, inspection, and over pressure protection.
- Section V for non-destructive examination.
- Section IX for welder and procedure qualifications.

Code Exceptions

The areas of possible exceptions to the ASME Code can be broken down into four basic areas. These are:

- Administration of the Code
- Technical design
- Inspection, examination, and fabrication of the components
- Procedure qualification

Although each of these areas are interrelated the exceptions come under different authorities.

Administration of the Code

This is generally covered in Section III, Division 1, Subsection NCA and is controlled by the type of contract placed for the design and fabrication of the component. The MP187 and associated DSC's were procured under the premise of following the technical requirements of the Code without requiring the use of an Authorized Inspector and not applying an N stamp. Hence, many of the administrative items that would allow the vessels to be stamped are not formally in place. This includes such things as a Design Specification certified by a professional engineer and a formal Over Pressurization report; and design and fabrication work being done by a firm(s) holding a stamp. These items have little affect on the functionality of the component but directly affect its ability to comply with the requirements of the ASME Code. The qualifications of the firms and personnel, procedures used to develop the design reports, and fabrication specifications,

and the lack of an N stamped vendor are all exceptions to the requirements of Subsection NCA. Technically, wherever the Code requires the Certificate Holder to perform some function, neither the designer nor the fabricator can comply since they are not formally functioning as the Certificate Holder. Hence Subsection NCA does not apply.

Technical Compliance

Technical compliance is compliance with the design rules and specification of materials, processes, joint configurations, etc. that allow the MP187 and associated DSCs to comply with the Code. The evaluation and design performed for the components is reported in the MP187 10CFR71 SAR. The design is based on compliance with Section III of the ASME Code as modified by NRC Regulatory Guides, NUREGS, and the 10CFR71 SAR as discussed in the SAR. Tables 1, 2 and 3 provide a discussion of technical exceptions to the written Code provisions for the materials, fabrication, examination, and testing. The majority of these exceptions are caused by the deviations in configuration of the cask and DSC's from the classical pressure vessel addressed by the Code. If an Owner generated, certified ASME Design Specification had been available, then in accordance with the Code, each of these exceptions could be evaluated and possibly accepted. This Design Specification acceptance constitutes a Code interpretation by the certifying professional engineer and could permit stamping of the MP187 cask and DSC's.

Fabrication, Inspection, Examination of Components

There are no specific exceptions taken to the Code in the inspection areas, except a non ASME Code certified fabricator is permitted to build the MP187 and associated DSCs. Neither an Authorized Nuclear Inspector (ANI) nor Code certified shop is required by the procurement documents to fabricate or inspect these components. Therefore, the role of the Certificate Holder is missing from the fabrication and inspection process. Fabrication exceptions are provided in Tables 1, 2, and 3.

Procedure Qualifications

With the exception of spot welding, all welding and procedure qualifications are performed in accordance with NB-4000 and Section IX. Spot welding of the oversleeve to the guide sleeve will be qualified to Section IX except for QW-196.1.3 for qualification nugget size, and QW-196.2.1 for shear test specimens. The nugget size shall equal or exceed the size specified on the drawing. The shear tests shall equal or exceed a minimum strength of 100 lbs per spot weld and an minimum average strength of 125 lbs.

TABLE 1
MP-187 CODE EXCEPTIONS

Reference ASME Code Section/Article	Code Requirement	Exception, Justification & Compensatory Measures
NB-1100	Requirements for Code Stamping of Components	The MP187 cask is designed in accordance with Regulatory Guides 7.6 and 7.8 which invokes specific sections of the ASME Code, Section III, Subsection NB-3000; and fabricated in accordance with the direction provided in NUREGS 3019. As described in the SAR, the cask is fabricated to the requirements of Section NB, to the maximum extent practical. Code Stamping is not required by 10CFR71 or 10CFR72 regulation. As Code Stamping is not required, the fabricator is not required to be ASME Certified.
NB-2130 NB-4120	Material must be supplied by ASME approved material suppliers Material Certification by Certificate Holder	All materials designated as ASME on the SAR drawings are obtained from ASME approved MM or MS supplier with ASME CMTR's or from a supplier whose QA program has been audited to meet the appropriate ASME requirements. Alternately, material may be independently tested by an approved test lab to verify material. Material is certified to meet all ASME Code criteria but is not eligible for Certification or Code Stamping if a non-ASME fabricator is used. As the fabricator is not required to be ASME certified, material certification to NB-2130 is not possible. Material traceability & certification are maintained in accordance with TNW's NRC approved QA program
NB-5231	Weld examination shall be RT with surface PT	<u>MP187 Containment Final Closure Welds</u>: Due to the presence of the structural shell, and resulting 4" air gap, examination of this joint to NB-5231 certification is difficult to perform. If the required Subsection NB-5231 RT acceptance criteria cannot be met, the joint will be volumetrically examined by UT. In this case, a test block will be constructed to demonstrate that the chosen method of inspection meets NB Code and is capable of finding the minimum specified NB-5330 size flaws. UT/RT inspection may be supplemented by a multilevel PT inspection.
NB-4243/ NB-5231/NF-5210	Joint Configuration shall comply with ASME Code details. Radiographic (RT) Inspection of joints is required	<u>MP187 Structural (Outer Shell to top and bottom forging) weld inspections</u>: The joint configuration for the structural shell to top and bottom forgings does not comply with the details provided in NB-4243 for a Category C joint. The selected welds develop the full strength of the structural shell and include left-in-place backing bars (the forgings). Due to joint configuration, a volumetric examination of these joints by RT or UT is not feasible. In lieu of the RT/UT examination required by NB-5231, or NF-5212(a), a PT inspection of every layer of deposited weld metal will be performed. This inspection will provide a pseudo volumetric examination capable of finding all flaws large enough to cause a problem in the ductile stainless steel used in the fabrication of the shells.

Reference ASME Code Section/Article	Code Requirement	Exception, Justification & Compensatory Measures
NB-5243	Radiographic examination plus UT examination of fusion zone plus PT examination of finished surface.	MP187 Outer Shell to trunnion sleeve weld inspection: The weld joint inspection does not meet the requirements of NB-5243 for a Category D joint. NUREG 3019 requires that the outer shell and trunnion sleeves be designed to the requirements of Subsection NF, but for conservatism, a commitment has been made to meet the same Subsection NB requirements as the containment where practical. The joint inspection meets the requirements of NF-5212(b). Additionally a 150% design load proof test is performed on the upper trunnions followed by a surface PT examination to demonstrate acceptability of weld joint.
NB-6115	Additional machining not to exceed 10% of wall thickness or 3/8" whichever is less	MP187 Containment Shell: Due to the fabrication and machining sequence for the inner shell, approximately 50% of the shell is machined to final form at the time of the 150% design pressure test. At proposed time of test, there is a theoretical 3/8" of machined stock included on the inner shell I.D. (30% nominal wall) that will not be removed until after lead pour has stabilized the shell dimensions. As described in section 2.6.1.3.2 of the SAR, the shell stresses due to the 75 psig test pressure are 2.0 ksi (Pm) & 3.0 ksi (Pm + Pb) with margins of safety equal to 12.5 for both. These stresses are such a small percentage of allowable (27.0 ksi & 40.5 ksi respectively) that the increased wall thickness will not invalidate the test results.
NB-6111	All completed pressure retaining systems shall be pressure tested	The nitronic rails are small items that can not be installed into cask until the end of the manufacturing process.
NB-6121 NB-6224	Joints shall be left exposed for examination during test Examination for leakage after application of pressure	Due to the presence of the outer shell, the inner shell welds are inaccessible during/after the pressure test to check for leakage. A helium test is performed following the pressure test. The acceptance criteria of ANSI N14.5 "leak tight" will ensure that any flaws in the inner (containment) shell welds will be discovered and repaired before proceeding with fabrication. A PT examination of the final machined surface is performed will ensure that any leak paths through the inner (containment) shell are discovered after the final machining operation.
NB-7000 NB-8000	Overpressure Protection Requirements for nameplates, stamping & reports per NCA-8000	No overpressure protection is provided for the MP187 containment. The function of the MP187 is to contain radioactive materials under normal, off normal & hypothetical accident conditions postulated to occur during transportation & storage. The MP187 is designed to withstand the maximum internal pressure considering 100% fuel rod failure at maximum accident temperature. The MP187 containment is pressure tested to 150% design pressure. The MP187 nameplate provides the information required by 10CFR71, 49CFR173 and 10CFR72 as appropriate. Code stamping is not required for the MP187. QA Data packages are prepared in accordance with the requirements of 10CFR71, 10CFR72 and TNW's approved QA program.

TABLE 2
FC, FO, AND FF DSC SHELL CODE EXCEPTIONS

Reference ASME Code Section/Article	Code Requirement	Exception, Justification & Compensatory Measures
NB-1100	Requirements for Code Stamping of Components	The FO, FC and FF DSC shells are designed & fabricated in accordance with the ASME Code, Section III, Subsection NB to the maximum extent practical as described in the SAR, but Code Stamping is not required. As Code Stamping is not required, the fabricator is not required to hold an ASME N or NPT stamp or be ASME Certified.
NB-2130 NB-4121	Material must be supplied by ASME approved material suppliers Material Certification by Certificate Holder	All materials designated as ASME on the SAR drawings are obtained from ASME approved MM or MS supplier with ASME CMTR's or from a supplier whose QA program has been audited to meet the appropriate ASME requirements. Alternately, material may be independently tested by an approved test lab to verify material. Material is certified to meet all ASME Code criteria but is not eligible for certification or Code Stamping if a non-ASME fabricator is used. As the fabricator is not required to be ASME certified, material certification to NB-2130 is not possible. Material traceability & certification are maintained in accordance with TNW's NRC approved QA program
NB-4243 fig. NB-4243-1 NB-5231	Full penetration at welds are required for DSC closure welds Weld examination shall be UT or RT with surface PT	<u>DSC Inner and Outer Top Cover Closure Welds</u>: Joint details do not comply with the requirements of fig. NB-4243-1 for a Type 1 Category C flat head closure weld. RT inspection to NB-5231 is not practical due to the presence of the loaded fuel, high radiation area, and presence of the transfer cask. The inner and outer cover plate closure welds provide the redundant closure welds required by 10CFR72. The inner top cover plate to shell weld is a 3/16" multi-layer effective throat partial penetration weld. Examination is multi-level PT (root and final) plus a helium leak test. The outer top cover plate to shell weld is a ½" effective throat multi-layer partial penetration weld. Examination will be either a UT examination plus surface PT, or a multi-layer (root, each ¼" and final) PT. Redundant multi-pass welds provide assurance that imperfections will not propagate in the ductile, fracture tough stainless steel used for fabrication.
NB-6111	All completed pressure retaining systems shall be pressure tested	The DSC Shell and inner bottom cover are pressure tested during fabrication to the requirements of NB-6000. In addition, a helium leak test is performed to demonstrate leakage integrity of this boundary. The outer bottom cover plate can not be installed until after the bottom shield plug is installed. The top closure welds are not completed until the DSC is loaded with fuel and, therefore, the top cover plates are also not subject to the pressure test. Multi-pass welds are used for these joints

Reference ASME Code Section/Article	Code Requirement	Exception, Justification & Compensatory Measures
		to eliminate potential leakage paths and a helium leak test is performed after completion of the inner top cover plate to shell closure weld. PT inspections of the top closure welds are performed on the root, each ¼" of deposited metal & final layer. The DSC inner and outer closure welds have been subjected to an extensive test program to ensure the joint parameters provide satisfactory welds with over 60 similar canisters successfully welded using similar joint details and parameters. The shield plug support ring and vent and siphon block are also not pressure tested due to the manufacturing sequence. The support ring is not a pressure-retaining item and the siphon block weld is helium leak tested when fuel is loaded and then covered with the outer top closure plate.
NB-7000	Overpressure Protection	No overpressure protection is provided for the DSC. The function of the DSC is to contain radioactive materials under normal, off normal & hypothetical accident conditions postulated to occur during transportation & storage. The DSC is designed to withstand the maximum internal pressure considering 100% fuel rod failure at maximum accident temperature. The DSC is pressure tested to 125% of normal operating design pressure.
NB-8000	Requirements for nameplates, stamping & reports per NCA-8000	The DSC nameplate provides the information required by 10CFR71, 49CFR173 and 10CFR72 as appropriate. Code stamping is not required for the DSC. QA Data packages are prepared in accordance with the requirements of 10CFR71, 10CFR72 and TNW's approved QA program.

TABLE 3
FC, FO, AND FF DSC BASKET CODE EXCEPTIONS

Reference ASME Code Section/Article	Code Requirement	Exception, Justification & Compensatory Measures
NG-1100	Requirements for Code Stamping of Components	The FO, FC and FF DSC baskets are designed & fabricated in accordance with the ASME Code, Section III, Subsection NG to the maximum extent practical as described in the SAR, but Code Stamping is not required. As Code Stamping is not required, the fabricator is not required to hold an ASME N or NPT stamp or be ASME Certified.
NG-2130 NG-4121	Material must be supplied by ASME approved material suppliers Material Certification by Certificate Holder	All materials designated as ASME on the SAR drawings are obtained from ASME approved MM or MS supplier with ASME CMTR's or from a supplier whose QA program has been audited to meet the appropriate ASME requirements. Alternately, material may be independently tested by an approved test lab to verify material. Material is certified to meet all ASME Code criteria but is not eligible for certification or Code Stamping if a non-ASME fabricator is used. As the fabricator is not required to be ASME certified, material certification to NB-2130 is not possible. Material traceability & certification are maintained in accordance with TNW's NRC approved QA program
NG-2400	General requirements	Support rod ends contain tack welds to provide assurance that the sleeves do not rotate. Tack welding of this material will not comply to code requirements. Due to lack of stresses on this weld, safety is not impacted.
NB-8000	Requirements for nameplates, stamping & reports per NCA-8000	The DSC nameplate provides the information required by 10CFR71, 49CFR173 and 10CFR72 as appropriate. Code stamping is not required for the DSC. QA Data packages are prepared in accordance with the requirements of 10CFR71, 10CFR72 and TNW's approved QA program.