SMUD
SACRAMENTO MUNICIPAL UTILITY DISTRICT ☐ P. O. Box 15830, Sacramento CA 95852-1830, (916) 452-3211
AN ELECTRIC SYSTEM SERVING THE HEART OF CALIFORNIA

NQA 01-019

March 5, 2001

U.S. Nuclear Regulatory Commission
Document Control Desk
Washington, DC 20555

Docket No. 72-11
Rancho Seco Independent Spent Fuel Storage Installation
ERRATA - RANCHO SECO FINAL SAFETY ANALYSIS REPORT, VOLUME IV

Attention: Randy Hall

In SMUD letter MPC&D 00-149, dated November 21, 2000, we sent you Revision 0 to the Rancho Seco Independent Spent Fuel Storage Installation Final Safety Analysis Report (IFSAR). The Rancho Seco IFSAR consisted of four volumes, with Volume IV containing calculations and drawings.

It has come to my attention that the drawings we sent you in IFSAR Volume IV were not the latest revisions that were in effect at the time of the submittal. The drawing revisions that we should have sent in IFSAR, Volume IV are:

Drawing No.	Revision
NUH-05-4001	13
NUH-05-4003	8
NUH-05-4004	13
NUH-05-4005	11

To correct this error, please replace the drawings in IFSAR Volume IV with the attached drawings. We apologize for any inconvenience this may cause.

These drawings are proprietary. In accordance with 10 CFR 2.790, we are including an affidavit requesting that the NRC withhold this proprietary information from public disclosure.

Members of your staff with questions requiring additional information or clarification may contact Bob Jones at (916) 732-4843.

Sincerely,

Jerry Delezenski
Superintendent, QA/Licensing/Admin.

cc: E.W. Merschoff, NRC Region IV, Arlington

AFFIDAVIT PURSUANT TO 10 CFR 2.790

Transnuclear West Inc.)
State of California) SS.
County of Alameda)

I, Robert M. Grenier, depose and say that I am President and Chief Operating Officer of Transnuclear West Inc., duly authorized to make this affidavit, and have reviewed or caused to have reviewed the information which is identified as proprietary and referenced in the paragraph immediately below. I am submitting this affidavit in conformance with the provisions of 10 CFR 2.790 of the Commission's regulations for withholding this information.

The information for which proprietary treatment is sought is contained in the calculation packages and drawings listed below:

CALCULATION PACKAGES

File #	Revision #	Title
2069.02XX	—	**Project Structural Calculations**
2069.0201	3	NUHOMS®MP187 FO-DSC 10CFR72 Structural Analysis
2069.0202	2	SMUD HSM 10CFR72 Structural Analysis – Pre-fab. Modules for Onsite Conditions
2069.0203	2	NUHOMS®MP187 Cask 10CFR72 Structural Analysis - NDP Cask for Onsite Load Conditions
2069.0204	7	NUHOMS®MP187 Guide Sleeve Structural Analysis
2069.0205	3	NUHOMS®MP187 FF-DSC 10CFR72 Structural Analysis
2069.0214	2	Cask/HSM Restraint System Structural Analysis
2069.0216	2	Rancho Seco NUHOMS® Short Cavity (FO) Dry Shielded Canister Shell Assembly Structural Analysis
2069.0217	0	FO/FC Dry Shielded Canister Basket Assembly Structural Analysis
2069.0219	1	Long Cavity (FC/FF) Dry Shielded Canister Shell Assembly Structural Analysis
2069.0220	3	Lead Shield Plug Evaluation for SMUD FC/FF DSC Calculation

2069.04XX	—	**Project Thermal Calculations**
2069.0400	3	Rancho Seco HSM Thermal Analysis
2069.0401	4	MP187 Cask Thermal Analysis for Onsite Transfer and Storage Conditions
2069.0402	1	Fire Analysis for the Rancho Seco ISFSI During Transfer, Loading and Storage Conditions
2069.0453	4	MP187 Cask Peak Pressure Calculation for DSC Cavity and Cask DSC Annulus During Storing DSC
NUH005.0450	0	Dry Storage Clad Temperature Acceptance Limit for Rancho Seco Fuel Assemblies
2069.05XX	---	**Project Shielding Calculations**
2069.0500	1	Radiological Source Term Calculation for Rancho Seco fuel
2069.0501	2	Rancho Seco Shielding Material Densities Calculation
2069.0502	4	Rancho Seco Site Dose Calculation
2069.0503	2	Rancho Seco Occupational Exposure Calculation
2069.0505	2	Rancho Seco Fission Gas Release Dose Assessment
2069.0507	0	Rancho Seco NUHOMS® DSC Confinement Evaluation

DRAWINGS

Drawing #	Revision #	Title
NUH-05-4001	13	NUHOMS®MP187 Multi-purpose Cask Main Assembly (six sheets)
NUH-05-4003	8	NUHOMS®MP187 Multi-purpose Cask Onsite Transfer Arrangement (two sheets)
NUH-05-4004	13	NUHOMS® FO-DSC and FC-DSC for PWR Fuel Main Assembly (four sheets)
NUH-05-4005	11	NUHOMS® FF-DSC for PWR Fuel Main Assembly (four sheets)

These documents have been appropriately designated as proprietary.

I have personal knowledge of the criteria and procedures utilized by Transnuclear West Inc. in designating information as a trade secret, privileged or as confidential commercial or financial information.

Pursuant to the provisions of paragraph (b) (4) of Section 2.790 of the Commission's regulations, the following is furnished for consideration by the Commission in determining whether the information sought to be withheld from public disclosure, included in the above referenced document, should be withheld.

1) The information sought to be withheld from public disclosure are licensing drawings and calculations of a concrete modular storage and transportation system, which is owned and has been held in confidence by Transnuclear West Inc.

2) The information is of a type customarily held in confidence by Transnuclear West Inc. and not customarily disclosed to the public. Transnuclear West Inc. has a rational basis for determining the types of information customarily held in confidence by it.

3) The information is being transmitted to the Commission in confidence under the provisions of 10 CFR 2.790 with the understanding that it is to be received in confidence by the Commission.

4) The information, to the best of my knowledge and belief, is not available in public sources, and any disclosure to third parties has been made pursuant to regulatory provisions or proprietary agreements which provide for maintenance of the information in confidence.

5) Public disclosure of the information is likely to cause substantial harm to the competitive position of Transnuclear West Inc. because:

   a) A similar product is manufactured and sold by competitors of Transnuclear West Inc.

   b) Development of this information by Transnuclear West Inc. required thousands of man-hours and hundreds of thousands of dollars. To the best of my knowledge and belief, a competitor would have to undergo similar expense in generating equivalent information.

   c) In order to acquire such information, a competitor would also require considerable time and inconvenience related to the development of a design and analysis of a dry spent fuel storage system.

   d) The information required significant effort and expense to obtain the licensing approvals necessary for application of the information. Avoidance of this expense would decrease a competitor's cost in applying the information and marketing the product to which the information is applicable.

   e) The information consists of description of the design and analysis of a dry spent fuel storage and transportation system, the application of which provides a competitive economic advantage. The availability of such information to competitors would enable them to modify their product to better compete with Transnuclear West Inc., take marketing or other actions to improve their product's position or impair the position of Transnuclear West's product, and avoid developing similar data and analyses in support of their processes, methods or apparatus.

   f) In pricing Transnuclear West's products and services, significant research, development, engineering, analytical, licensing, quality assurance and other costs and expenses must be included. The ability of Transnuclear West's competitors to utilize such information without similar expenditure of resources may enable them to sell at prices reflecting significantly lower costs.

Further the deponent sayeth not.

Robert M. Grenier
President and Chief Operating Officer
Transnuclear West Inc.

Subscribed and sworn to me before this 6th day of March, 2001, by Robert M. Grenier.

Shannon L. Christensen
Notary Public

REV	DESCRIPTION:	DRAWN:	ORIGINATED:	VERIFIED:	APPROVED:	LICENSING:
13	AMENDMENT APPLICATION No. 4	RGP 3/6/00	3-13-00	3/14/00	3.14.00	3/14/00

TRANSNUCLEAR WEST
CONTROLLED COPY NO. 2

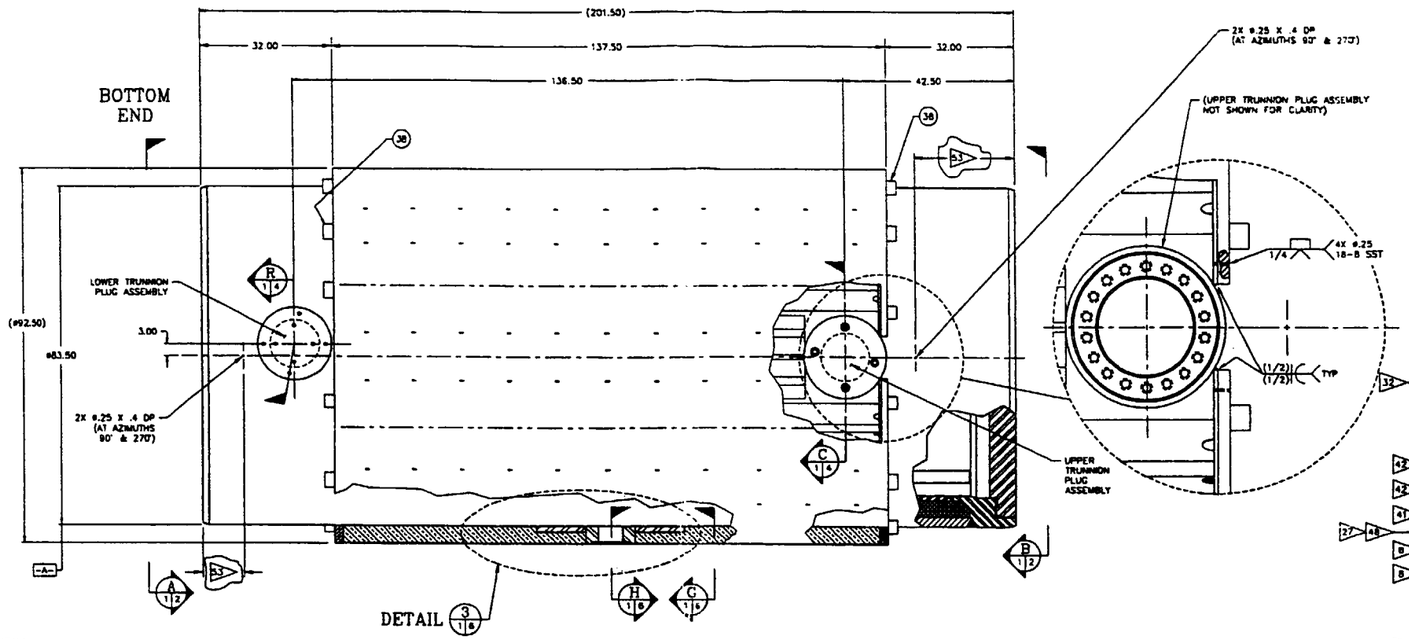

MAIN ASSEMBLY

NOTES:

1. ALL WELDING SHALL BE PERFORMED IN ACCORDANCE WITH NB-4300 AND SECTION IX. WELDING PROCEDURES SHALL BE QUALIFIED IN ACCORDANCE WITH NB-4330 AND SECTION IX OF THE ASME CODE. WELDS SHOWN TO BE SMOOTH OR FLUSH SHALL HAVE A MAXIMUM REINFORCEMENT OF .03 INCHES AND HAVE A SMOOTH TRANSITION TO THE BASE MATERIAL SURFACE. FINISHED THICKNESS OF ALL GROUND OR MACHINED AREAS SHALL BE VERIFIED BY MECHANICAL OR ULTRASONIC MEASUREMENT.

2. ALTERNATIVE WELD JOINT PREPARATIONS (U, V, OR J GROOVES) MAY BE USED PROVIDED ALL ASME CODE CRITERIA ARE MET. THE SPECIFIED MINIMUM EFFECTIVE THROAT MUST BE MAINTAINED.

3. ALL WELDS SHALL BE LIQUID PENETRANT INSPECTED ON FINAL PASS IN ACCORDANCE WITH ASME CODE, SECTION III, DIVISION I, SUBSECTION NB, ARTICLE NB-5000 AND SECTION V, ARTICLE 6.

4. RADIOGRAPHIC INSPECTION SHALL BE PERFORMED IN ACCORDANCE WITH ASME CODE SECTION III, DIVISION I, SUBSECTION NB, ARTICLE NB-5000 AND SECTION V, ARTICLE 2. RADIOGRAPHIC INSPECTION SHALL BE PERFORMED ON THE FOLLOWING:
   (a) ALL LONGITUDINAL SEAM WELDS OF CASK INNER AND STRUCTURAL SHELLS.
   (b) ALL CIRCUMFERENTIAL SEAM WELDS OF CASK INNER AND STRUCTURAL SHELLS, EXCEPT END WELDS OF STRUCTURAL SHELL TO TOP & BOTTOM FORGINGS.

5. ALL WELDS SHALL BE VISUALLY EXAMINED IN ACCORDANCE WITH NB 4424 OF ASME CODE. VISUAL WELD INSPECTORS SHALL BE QUALIFIED PER ASME CODE.

6. INDICATED WELDS SHALL BE LIQUID PENETRANT INSPECTED ON ROOT AND FINAL PASSES IN ACCORDANCE WITH ASME CODE, SECTION III, DIVISION 1, SUBSECTION NB, ARTICLE NB-5000, AND SECTION V, ARTICLE 6.

7. WELD OVERLAY SHALL BE MADE USING ERNiCrMo-3 OR ENiCrMo-3 ELECTRODE MEETING SFA 5.14 OR SFA 5.11, RESPECTIVELY.

8. CADMIUM PLATED.

9. OPTIONAL CADMIUM, CHROME OR NICKEL PLATE SURFACE TO A THICKNESS OF .0005 MIN/.001 MAX.

10. CUT NSP SUPPORT ANGLE ASSEMBLIES TO CLEAR SHEAR KEY AS REQUIRED. TRIM NSP SUPPORT ANGLE ASSEMBLIES ADJACENT TO UPPER TRUNNION SLEEVES.

12. LEAD TO BE CAST IN PLACE, CONFORMING TO ASTM B29.

13. LEAD SHIELDING INTEGRITY SHALL BE DETERMINED BY GAMMA SCAN, AFTER COOL DOWN TO AMBIENT TEMPERATURE. ACCEPTANCE CRITERIA PER SECTION 8.0 OF SAR.

14. NEUTRON SHIELD SUPPORT ANGLES (ITEMS 16 & 43) MAY BE FORMED AND INSTALLED AS SEPARATE PIECES. NO CONTROL OF CONTACT AREA IS REQUIRED. ALTERNATIVELY, MATERIALS MAY BE BONDED OR RIVETED TOGETHER AND PLACED AS A SINGLE ITEM.

15. FINAL STRUCTURAL SHELL TO FORGING WELD SHALL BE MADE AFTER LEAD POUR AND COOL DOWN. PREVENT LEAD INGRESS TO WELD DURING WELDING USING METHODS SUCH AS CLOSE TOLERANCE JOINTS, SHIM STOCK, OR OTHER PROVEN MEANS. PRIOR TO WELDING, CLEAN AREA TO DEMONSTRATE THERE IS NO RESIDUAL LEAD CONTAMINATION.

16. LOCATION OF FULL PENETRATION LONGITUDINAL AND CIRCUMFERENTIAL SEAM WELDS IN INNER SHELL (ITEM 1), BOTTOM STRUCTURAL SHELL (ITEM 3), AND TOP STRUCTURAL SHELL (ITEM 4) MAY BE MADE AT FABRICATOR'S OPTION. LENGTH OF ITEM 4 MAY BE INCREASED TO ELIMINATE ADDITIONAL CIRCUMFERENTIAL WELD IN ITEM 3. ITEM 4 SHALL BE NOT LESS THAN 59.88 INCHES LONG.

17. DESIGN PRESSURE IS 50 psig. CASK CONTAINMENT BOUNDARIES SHALL BE SUBJECTED TO AN INTERNAL TEST PRESSURE EQUAL TO A MINIMUM OF 150% OF THE DESIGN PRESSURE PER 10 CFR 71.85(b).

18. CASK CONTAINMENT BOUNDARIES SHALL BE HELIUM LEAK TESTED TO DEMONSTRATE A LEAKAGE RATE NOT TO EXCEED 1×10^{-7} STANDARD CUBIC CENTIMETERS PER SECOND, IN ACCORDANCE WITH ANSI N14.5.

19. INDICATED HOLES ARE PROVIDED FOR THE INSTALLATION OF A LID HANDLING FIXTURE FOR LIFTING AND HANDLING OF THE LID. EACH LOCATION SHALL BE STENCILED OR OTHERWISE LABELLED WITH THE FOLLOWING WARNING: "LID LIFT ONLY".

20. CASK INNER AND STRUCTURAL SHELLS SHALL COMPLY WITH THE TOLERANCE REQUIREMENTS OF ASME CODE, SECTION III, DIVISION 1, SUBSECTION NE, ARTICLE NE-4220.

21. ALL SHELL JOINTS SHALL BE MADE IN ACCORDANCE WITH ASME CODE, SECTION III, DIVISION 1, SUBSECTION NB, ARTICLE NB-4230.

22. ANY ADDITIONAL WELDS REQUIRED TO JOIN SHELL MATERIALS SHALL BE FULL PENETRATION WELDS INSPECTED PER NOTES 3, 4 & 5.

23. NOMINAL LEAD THICKNESS IS 4.0.

24. OPTIONAL: WATER RELIEF HOLES SHALL BE PROVIDED AT EACH PIN AND BOLT HOLE (37 PLCS). HOLES SHALL BE ø.25 AND SHALL BE DRILLED TO MEET BOTTOM OF HOLE AS SHOWN. RELIEF HOLES SHALL BE TAPPED 3/8-16UNC-2B X .50 DP.

25. RAILS MAY BE FABRICATED FROM SHORTER MATERIAL. FULL PENETRATION BUTT WELDS WITH SURFACE GROUND FLUSH SHALL BE PROVIDED TO FORM A CONTINUOUS RAIL. RAILS SHALL BE FORMED TO PROVIDE AT LEAST 50% SURFACE CONTACT WITH INNER SHELL (ITEM 1). MAXIMUM GAP SHALL NOT EXCEED .02. SLIDING SURFACE OF RAILS SHALL HAVE A 64μ INCH RMS FINISH, AND SHALL BE COATED WITH E/M CORPORATION PERMASLIK RN OR EQUIVALENT DRY FILM LUBRICANT.

26. STITCH WELD MAY BE CONTINUOUS TO AVOID CRUD TRAPS OR CAULK BETWEEN STITCH WELDS AND AT BOTTOM END OF RAIL (ITEM 21) USING GE-RTV-106 OR EQUIVALENT.

27. SEAL MATERIAL METALLIC HELICOFLEX HN SERIES WITH ALUMINUM JACKET INCONEL INNER AND INCONEL SPRING.

28. ELASTOMERIC SEALS FOR CASK SECONDARY SEALS SHALL HAVE A CROSS-SECTIONAL DIAMETER OF .275 (ITEM 28).

29. UPPER CASK TRUNNION SLEEVE TO SHELL WELDS SHALL BE LOAD TESTED TO 150% THE MAXIMUM DESIGN LOAD PRIOR TO JOINING INNER AND STRUCTURAL SHELLS.

30. ALL EXPOSED WELDS MAY BE GROUND SMOOTH TO ENHANCE CASK DECONTAMINATION.

31. RAIL MATERIAL: NITRONIC 60, SHEET, COLD REDUCED, ASTM A240, GRADE UNS S21800, RC 29-35, OR EQUIVALENT.

32. MATERIAL FOR ITEM 45 MAY BE 18-8 STAINLESS STEEL OR ASTM A564 GR 630; ITEM 46 MAY BE 18-8 SST OR ASTM A240 TYPE 304.

33. INDICATED WELD SHALL BE LIQUID PENETRANT INSPECTED ON ROOT PASS, FINAL PASS, AND EACH LAYER OF WELD DEPOSITION, IN ACCORDANCE WITH ASME CODE, SECTION III, DIVISION 1, SUBSECTION NB, ARTICLE NB-5000, AND SECTION V ARTICLE 6. RADIOGRAPHIC OR ULTRASONIC EXAMINATION MAY BE SUBSTITUTED FOR SPECIFIED PT PROVIDED ALL ASME CODE CRITERIA ARE MET.

34. ADDITIONAL NEUTRON SHIELD POUR HOLES MAY BE ADDED TO ITEMS 14 & 15 AND CLOSED PER SECTION DQ WITHOUT ITEM 38.

35. FABRICATOR MAY ELECT TO USE POUR HOLES IN FACE TO PLACE NS3. WELD PLUG AFTER NS3 HAS SET AT LEAST 48 HOURS. PROVIDE ø1/2" VENT HOLE IN CENTER OF PLATE AS PERMANENT VENT.

36. FOR ON-SITE FUEL TRANSFER OPERATIONS PERFORMED UNDER 10CFR72 REQUIREMENTS, O-RINGS ARE NOT REQUIRED TO BE INSTALLED. FOR ON-SITE FUEL STORAGE MODE PER 10CFR72 REQUIREMENTS, ALL O-RINGS SHALL BE METALLIC. FOR PART 71 TRANSPORTATION, METALLIC SEALS SHALL BE USED FOR ALL PRIMARY CONTAINMENT SEALS. EITHER METALLIC OR ELASTOMERIC MATERIAL MAY BE USED FOR SECONDARY SEALS AS DESCRIBED IN THE PARTS LIST.

37. BACKING BAR MAY BE FORMED BY MACHINING A RECESS IN ITEMS 12 & 13 NOT TO EXCEED .50" WIDE.

38. A ONE SIDED FULL PENETRATION BEVEL WELD WITH 3/8" MAX ROOT GAP PLUS 1/2" FILLET MAY BE SUBSTITUTED FOR DOUBLE BEVEL WELD.

39. ASME SA-182, TYPE FXM-19 FORGINGS MAY BE SUBSTITUTED FOR SPECIFIED PLATE MATERIAL.

40. LONGITUDINAL WELD IN TOP STRUCTURAL SHELL MAY BE MADE WITH ELECTRODE COMPATIBLE WITH TYPE 304 MATERIALS PROVIDED IT IS LOCATED AT 90° ±15° FROM UPPER TRUNNION SLEEVE CENTERLINE.

41. IMPACT LIMITER ATTACHMENT BLOCKS (ITEM 38) SHALL BE JOINED TO NSP SUPPORT RINGS (ITEMS 14 AND 15) WITH FULL PENETRATION WELDS. ALTERNATIVELY, THE ATTACHMENT BLOCKS AND SUPPORT RINGS MAY BE MACHINED FROM PLATE OR BAR.

42. SILVER PLATED STAINLESS STEEL TUBULAR O-RING CROSS-SECTION ø.062 INCH PRECOMPRESSED TO ø.052 INCH PRIOR TO PLATING.

43. SUPPORT RINGS, ITEM 14 AND 15, MAY BE FABRICATED FROM SEGMENTS JOINED BY FULL PENETRATION WELDS WITH SURFACE PT EXAMINATION.

(NOTES CONTINUED ON SHEET 3)

U.S. Patent No. 4,780,269
5,406,600, 5,513,232 & 5,546,436
Proprietary Property of
Transnuclear, Inc.

This drawing may not be disclosed to others in whole or in part, or used for other than the transmitted purpose without written permission of Transnuclear, Inc.

ITEM NO	QTY PER	PART OR IDENTIFYING NO.	NOMENCLATURE OR DESCRIPTION	MATERIAL SPECIFICATION
53	8		TUBE, I.D. SIZED TO FIT ITEMS 33 & 34 (ø1 1/2" SCHED 40 OR SIMILAR)	STAINLESS STEEL
52	A/R		10 GA SHEET	ASTM A240 TYPE 304
51	38		SCREW THREAD INSERT 2-12UN-2B X 5.50 LG X (2.27) OD	AMS7245 STAINLESS STEEL
50	84		SCREW THREAD INSERT 1-8UNC-2B X 2.00 LG X (1.18) OD	AMS7245 STAINLESS STEEL
49	24		NSP SUPPORT ANGLE, INNER	ALUMINUM
48	2		SPACER WASHER	STAINLESS STEEL
47	16		SCREW, FLAT HD CAP SCREW 1/2-13UNC-2A X 1.0 LG	ASTM A320 GR L43
46	2		LOWER TRUNNION PLUG SHIELDING BLOCK	ASTM A240 TYPE 304
45	2		LOWER TRUNNION PLUG COVER PLATE	ASTM A564 GR 630
44	1		TAPERED PIN	ASTM A193 GR B7
43	2		TEST PORT, PLUG	ASME SA-479 TYPE 304
42	2		VENT/DRAIN PORT, PLUG	ASME SA-479 TYPE 304
41	4		TEST/VENT/DRAIN PORT, THREADED INSERT	ASME SA-479 TYPE 304
40	2		TEST PORT SEAL	METALLIC OR ELASTOMERIC
39	2		VENT/DRAIN PORT SEAL	METALLIC
38	24		IMPACT LIMITER ATTACHMENT BLOCK	ASTM A240 OR A479 TYPE 304
37	4		O-RING (2.0 ID) VENT/DRAIN/TEST PLUG	ELASTOMERIC OR METALLIC
36	2		VENT/DRAIN PORT SCREW, CAP HEX HD 3/4-10UNC-2A X 1 3/4" LG	ASTM A320 GR L43
35	2		TEST PORT SCREW, CAP HEX HD 3/4-10UNC-2A X 1 3/4" LG	ASTM A320 GR L43
34	8		SCREW, CAP HD SOC. 1-8UNC-2A 5.0 LG	ASTM A320 GR L43
33	12		HARDENED WASHER, 1.5 OD X.177 THK MAX	ASTM F436
32	36		HARDENED WASHER, 3.0 OD X.28 THK MAX	ASTM F436
31	4		FILLER PLATE	ASTM A240 TYPE 304
30	12		SCREW, CAP HD SOC. 1-8UNC-2A 4.5 LG	ASME SA-320 GR L43
29	1		O-RING (17.5 ID); RAM CLOSURE PLATE: CROSS-SECTION .425"	METALLIC
28	1		O-RING (19.4 ID); RAM CLOSURE PLATE: CROSS-SECTION .248"	METALLIC OR ELASTOMERIC
27	36		SCREW, CAP HD SOC. 2-12UN-2A X 0.18 LG	ASME SA-320 GR L43
26	1		O-RING (71.4 ID); TOP CLOSURE PLATE: CROSS-SECTION .425"	METALLIC
25	1		O-RING (69.6 ID); TOP CLOSURE PLATE: CROSS-SECTION .425"	METALLIC
24	1		TOP CLOSURE PLATE	ASME SA-240, TY. 304
23	1		RAM CLOSURE PLATE	ASME SA-240, TY. XM-19
22	A/R		CASTABLE NEUTRON SHIELDING MATERIAL	NS-3
21	2		RAILS, .120 THK X 4.0 WIDE	
20	2		UPPER TRUNNION PLUG BOTTOM PLATE	ASTM A240, TY. 304
19	A/R		NEUTRON SHIELD SHELL	ASTM A240 TYPE 304
18	12		PLUGS	ASTM A240, TY. 304
17	12		RUPTURE PLUG .038 (20 GA) THK	ASTM A240, TY. 304
16	24		NSP SUPPORT ANGLE, OUTER	ASTM A240 TYPE 304
15	1		NSP BOTTOM SUPPORT RING, PLATE	ASTM A240 OR A479 TYPE 304
14	2		NSP TOP SUPPORT RING, PLATE	ASTM A240 OR A479 TYPE 304
13	2		TIE BAR	ASME SA-240 TYPE XM-19
12	2		BEARING BLOCK	ASME SA-240 TYPE XM-19
11	1		PAD PLATE	ASME SA-240 TYPE XM-19
10	2		LOWER TRUNNION SLEEVE	ASME SA-182 TYPE FXM-19
9	2		UPPER TRUNNION SLEEVE	ASME SA-182 TYPE FXM-19
8	2		UPPER TRUNNION PLUG SIDE PLATE	ASTM A240, TY. 304
7	2		UPPER TRUNNION PLUG COVER PLATE	ASTM A240, TY. 304
6	A/R		GAMMA SHIELD	ASTM B29 LEAD
5	1		TOP FLANGE, MACHINED RING FORGING	ASME SA-182, GRADE F304, F304H OR F304N
4	1		TOP STRUCTURAL SHELL, ROLLED PLATE	ASME SA-240 TYPE XM-19
3	1		BOTTOM STRUCTURAL SHELL, ROLLED PLATE	ASME SA-240 TYPE 304
2	1		BOTTOM END CLOSURE, MACHINED FORGING	ASME SA-182, GRADE F304, F304H OR F304N
1	1		INNER SHELL, ROLLED PLATE	ASME SA-240, TYPE 304 AND TYPE XM-19

PARTS LIST

ALL DIMENSIONS ARE APPLICABLE AT 68°F AND ALL TOLERANCING APPLIES AFTER WELDING AND FINAL MACHINING UNLESS NOTED OTHERWISE.

DIMENSIONS ARE IN INCHES AND DEGREES UNLESS NOTED OTHERWISE. DIMENSIONING AND TOLERANCING IN ACCORDANCE WITH ANSI Y14.5M-1982, UNLESS NOTED OTHERWISE. TOLERANCES SHALL BE AS FOLLOWS:
DIMENSIONS LESS THAN 8.00: ± .06
8.00 TO 48.00: ± .13
GREATER THAN 48.00: ± .25
ANGLES: ± 1°

BREAK AND DEBURR ALL SHARP EDGES

3rd ANGLE PROJECTION

DO NOT SCALE DRAWING

TRANSNUCLEAR WEST

TITLE: SAFETY ANALYSIS REPORT
NUHOMS®-MP187
MULTI-PURPOSE CASK
MAIN ASSEMBLY

FILE NO	DWG NO	SCALE	SHEET	REV NO
NUH005.400	NUH-05-4001	NONE	1 OF 6	13

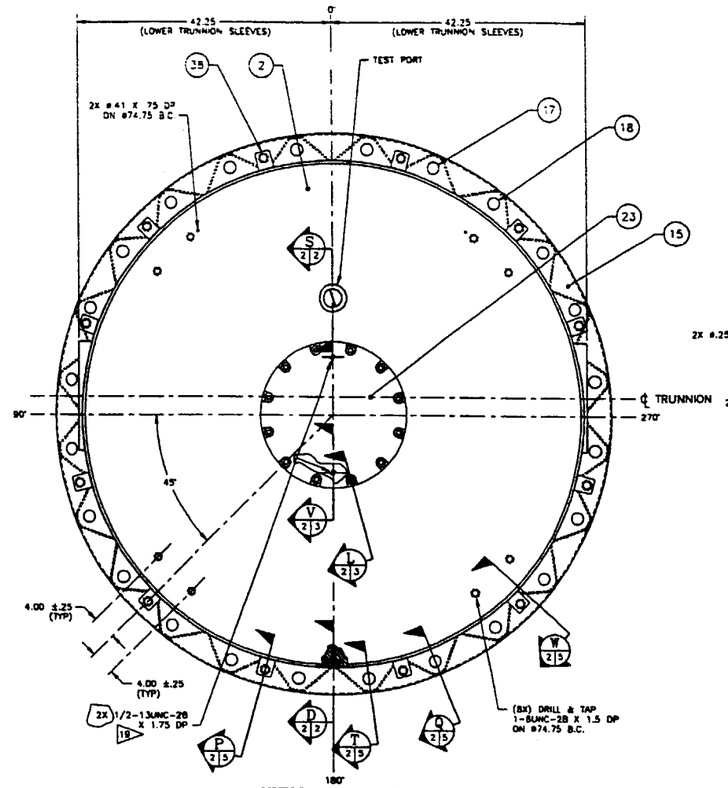

VIEW A 1/2
(UPPER TRUNNION SLEEVES AND PLUG ASSEMBLIES NOT SHOWN FOR CLARITY)

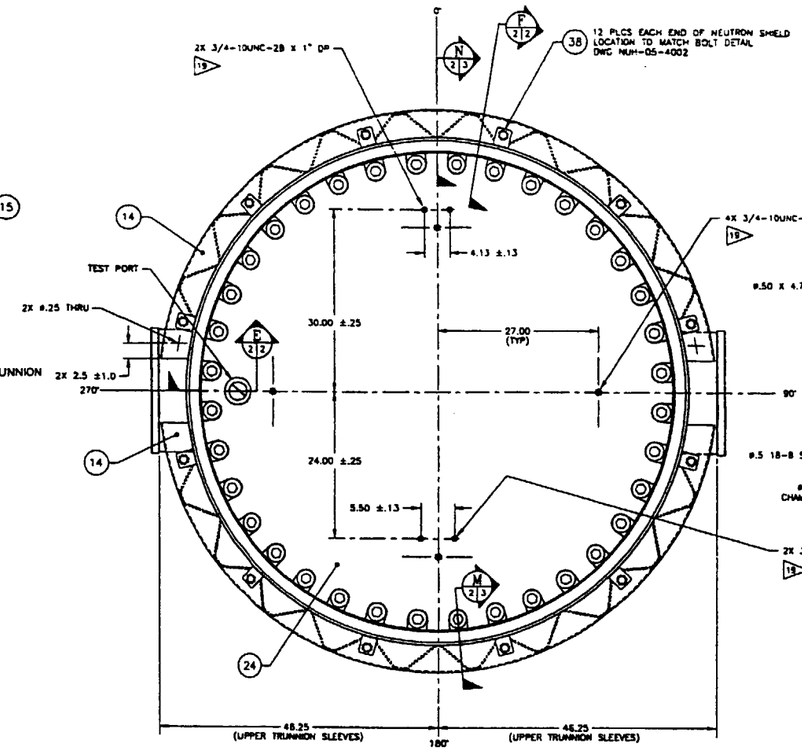

VIEW B 1/2

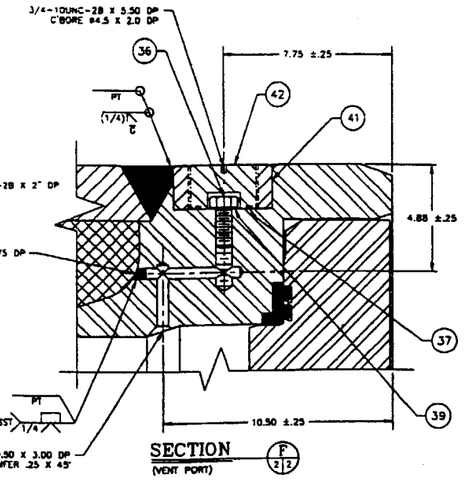

SECTION F 2/2
(VENT PORT)

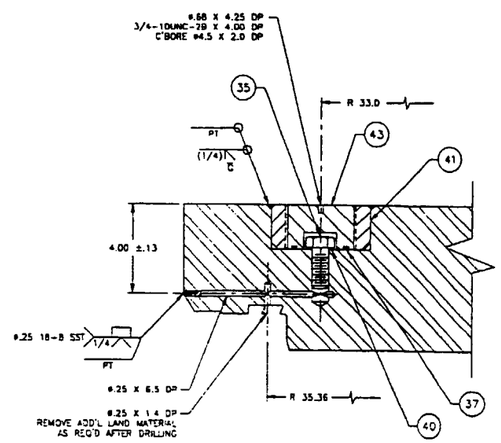

SECTION E 2/2
(TOP TEST PORT)

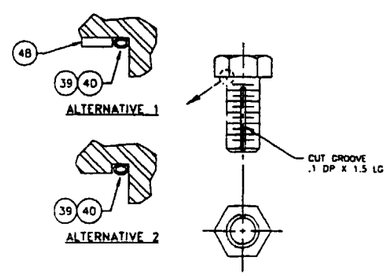

ITEM 35
TEST PORT SCREW

ITEM 36
VENT/DRAIN PORT SCREW

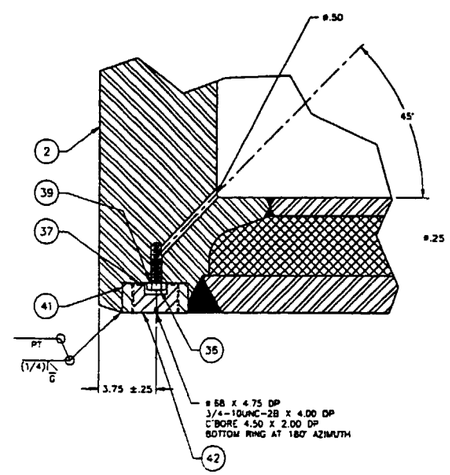

SECTION D 2/2
(180° AZIMUTH, DRAIN PORT INSTALLATION)

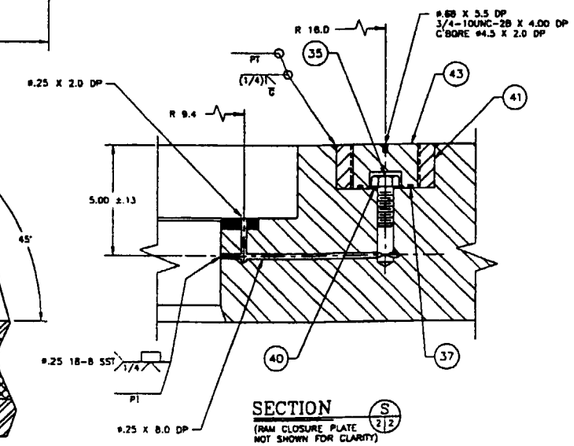

SECTION S 2/2
(RAM CLOSURE PLATE NOT SHOWN FOR CLARITY)

TRANSNUCLEAR WEST
CONTROLLED COPY NO. 2

U.S. Patent No. 4,780,269
5,406,600, 5,513,232 & 5,546,436
Proprietary Property of
Transnuclear, Inc.

This drawing may not be disclosed to others in whole or in part, or used for other than the transmitted purpose without written permission of Transnuclear, Inc.

ALL DIMENSIONS ARE APPLICABLE AT 68°F AND ALL TOLERANCING APPLIES AFTER WELDING AND FINAL MACHINING UNLESS NOTED OTHERWISE.

DIMENSIONS ARE IN INCHES AND DEGREES UNLESS NOTED OTHERWISE. DIMENSIONING AND TOLERANCING IN ACCORDANCE WITH ANSI Y14.5M-1982, UNLESS NOTED OTHERWISE. TOLERANCES SHALL BE AS FOLLOWS:
DIMENSIONS LESS THAN 6.00: ± .06
6.00 TO 48.00: ± .13
GREATER THAN 48.00: ± .25
ANGLES: ± 1°

BREAK AND DEBURR ALL SHARP EDGES

3rd ANGLE PROJECTION

DO NOT SCALE DRAWING

TRANSNUCLEAR WEST

TITLE: SAFETY ANALYSIS REPORT
NUHOMS®-MP187
MULTI-PURPOSE CASK
MAIN ASSEMBLY

FILE NO.	DWG NO	SCALE	SHEET	REV. NO
NUH005.4001	NUH-05-4001	NONE	2 OF 6	13

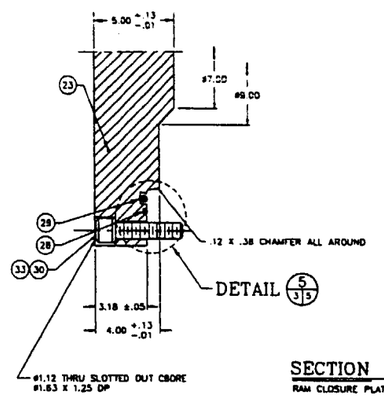

SECTION L/2 3
RAM CLOSURE PLATE

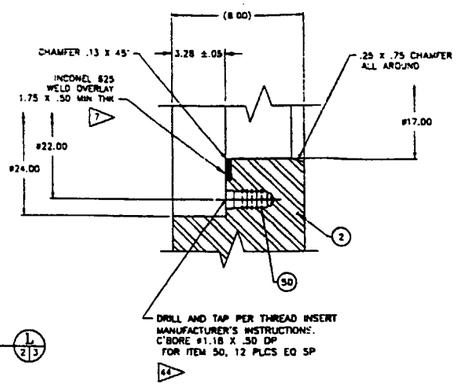

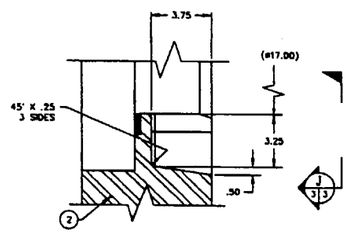

SECTION V/2 3
ITEM 23 NOT SHOWN (AT AZIMUTH 180° ONLY)

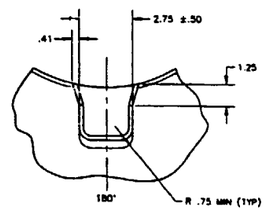

VIEW J/3 3

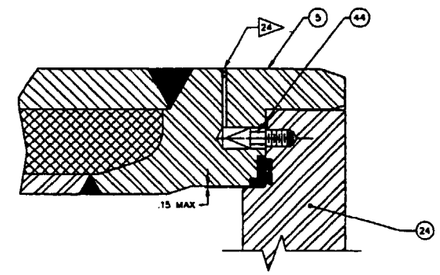

SECTION N/2 3
(AT AZIMUTH 0° ONLY)

NOTES:

44 ALL THREAD INSERTS SHALL BE INSTALLED IN ACCORDANCE WITH MANUFACTURER'S INSTRUCTIONS.

45 INSIDE SURFACES OF CASK TOP CLOSURE PLATE (ITEM 24) AND BOTTOM END CLOSURE (ITEM 2) MAY BE DRILLED AND TAPPED 4- 3/4-10UNC-2B X 2" DEEP, OR SMALLER. HOLES SHALL BE FILLED WHEN CASK IS IN USE.

46 THE INNER SHELL CONSISTS OF THREE SECTIONS. THE LOWER AND UPPER SHELL SECTIONS ARE 42.00 (MINIMUM) INCHES LONG ASME SA-240 TYPE XM-19 MATERIAL. THE MIDDLE SHELL SECTION IS ASME SA-240 TYPE 304 MATERIAL.

47 THE NEUTRON SHIELDING MATERIAL (NS-3) SHALL BE THE MANUFACTURER'S BASIC FORMULATION WITH 2 WEIGHT PERCENT (W/O), MINIMUM, B_4C.

48 STAINLESS STEEL, SILICONE, OR ETHYLENE PROPYLENE SHIMS AND/OR CLIPS MAY BE USED TO RETAIN O-RINGS IN PLACE DURING INSTALLATION OF THE TOP CLOSURE PLATE, RAM CLOSURE PLATE, AND TEST/VENT/DRAIN PLUG. SHIMS AND/OR CLIPS MAY REMAIN IN PLACE AND DO NOT NEED TO BE REMOVED PRIOR TO USE.

49 FOR WELDING XM-19 TO XM-19 MATERIAL TYPE 209 OR NiCrMo-3 ELECTRODES SHALL BE USED.

50 COMMERCIALLY AVAILABLE STAINLESS STEEL RUPTURE DISCS MAY BE SUBSTITUTED FOR ITEM 17. THE COMMERCIAL RUPTURE DISCS SHALL HAVE A NOMINAL RATED PRESSURE OF 75 PSIG ±10 PSI AND BE SPACED AT APPROXIMATELY 90°. IF THE COMMERCIALLY AVAILABLE RUPTURE DISCS ARE USED, SEAL ALL FOUR HOLES WITH ITEM 18 INSTEAD OF ITEM 17. THE COMMERCIAL DISCS MAY ALSO BE INSTALLED IN THE MSP TOP SUPPORT RING (ITEM 14).

51 AS AN ALTERNATIVE, ITEM 7 MAY BE COUNTERBORED TO ACCEPT ITEM 53. INCREASE LENGTH OF ITEM 53 AS REQUIRED TO REMAIN FLUSH AT OUTSIDE SURFACE OF PLUG ASSEMBLY.

52 INSPECTION SHALL BE PERFORMED IN ACCORDANCE WITH ASME CODE SECTION III, DIVISION 1, SUBSECTION NB, ARTICLE NB-5000.

53 TARGET HOLE LOCATED AS NECESSARY FOR CASK TO HSM ALIGNMENT OPERATIONS.

54 ADDITIONAL PLUG OR TACK WELDS MAY BE USED TO ATTACH ITEM 52 TO ITEM 7.

55 THREADED HOLES AND/OR LIFTING LUGS MAY BE ADDED TO EACH PART AS REQUIRED TO FACILITATE HANDLING OF THESE FINISHED COMPONENTS. THREADED INSERTS SUCH AS SCREWS, BOLTS, ETC. SHALL BE INSTALLED PRIOR TO SHIPPING THE CASK.

TRANSNUCLEAR WEST
CONTROLLED COPY NO. 2

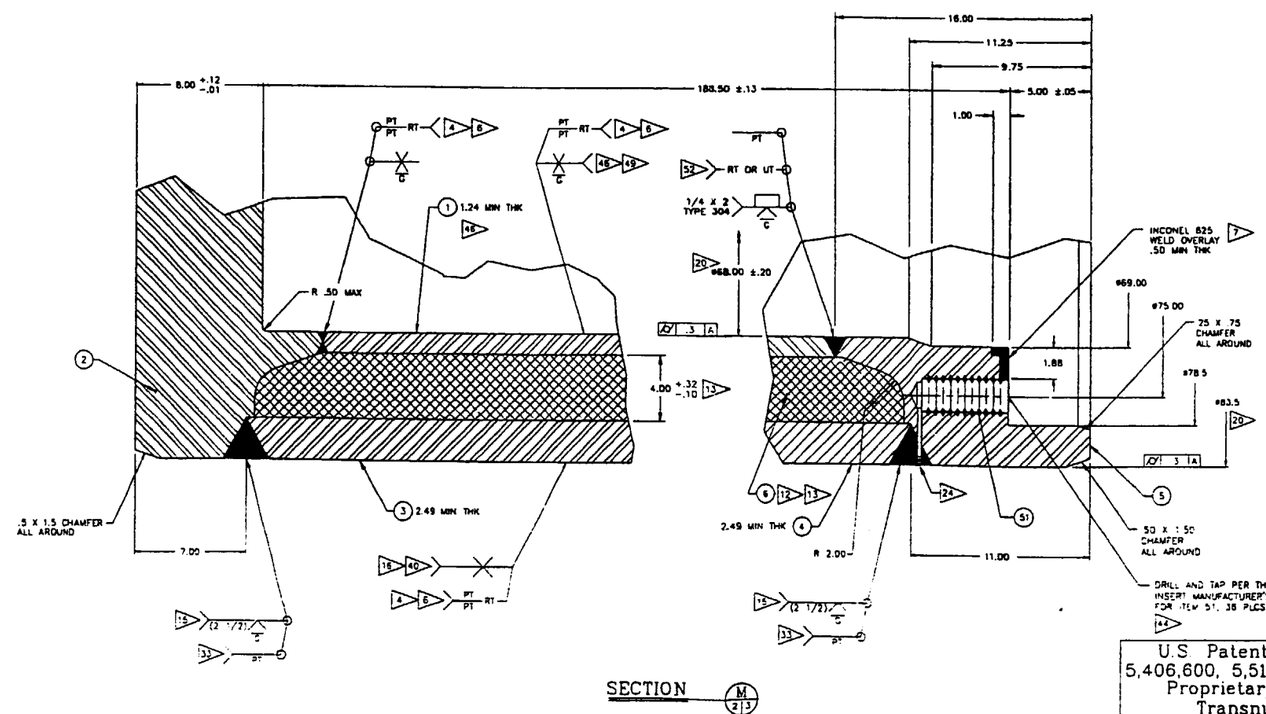

SECTION M/2 3

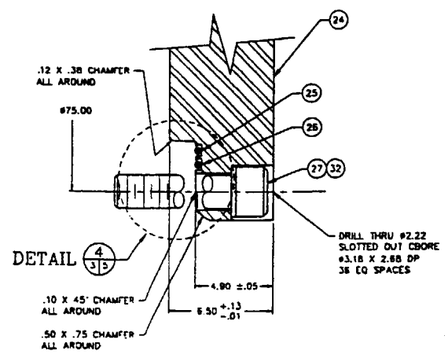

U.S. Patent No. 4,780,269
5,406,600, 5,513,232 & 5,546,436
Proprietary Property of
Transnuclear, Inc.
This drawing may not be disclosed to others in whole or in part, or used for other than the transmitted purpose without written permission of Transnuclear, Inc.

ALL DIMENSIONS ARE APPLICABLE AT EBTF AND ALL TOLERANCING APPLIES AFTER WELDING AND FINAL MACHINING UNLESS NOTED OTHERWISE.

DIMENSIONS ARE IN INCHES AND DEGREES UNLESS NOTED OTHERWISE. DIMENSIONING AND TOLERANCING IN ACCORDANCE WITH ANSI Y14.5M-1982. UNLESS NOTED OTHERWISE, TOLERANCES SHALL BE AS FOLLOWS:
DIMENSIONS LESS THAN 6.00: ±.06
6.00 TO 48.00: ±.13
GREATER THAN 48.00: ±.25
ANGLES: ±1°

BREAK AND DEBURR ALL SHARP EDGES

3rd ANGLE PROJECTION

DO NOT SCALE DRAWING

TRANSNUCLEAR WEST

TITLE: SAFETY ANALYSIS REPORT
NUHOMS®-MP187
MULTI-PURPOSE CASK
MAIN ASSEMBLY

FILE NO	DWG NO	SCALE	SHEET	REV NO
NUH005.4001	NUH-05-4001	NONE	3 OF 6	13

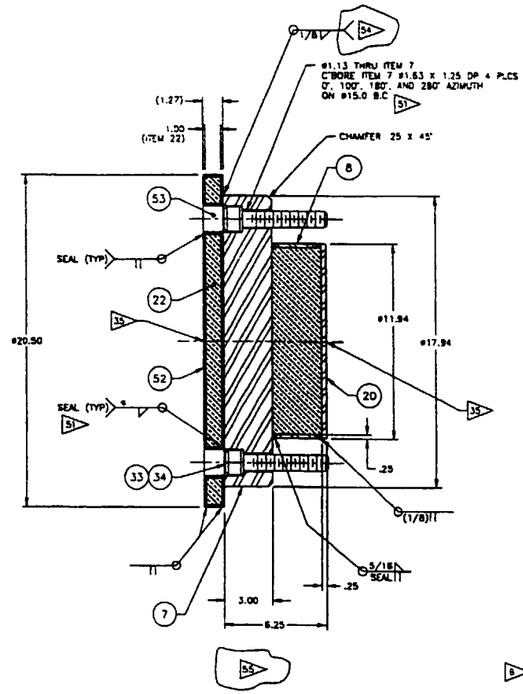

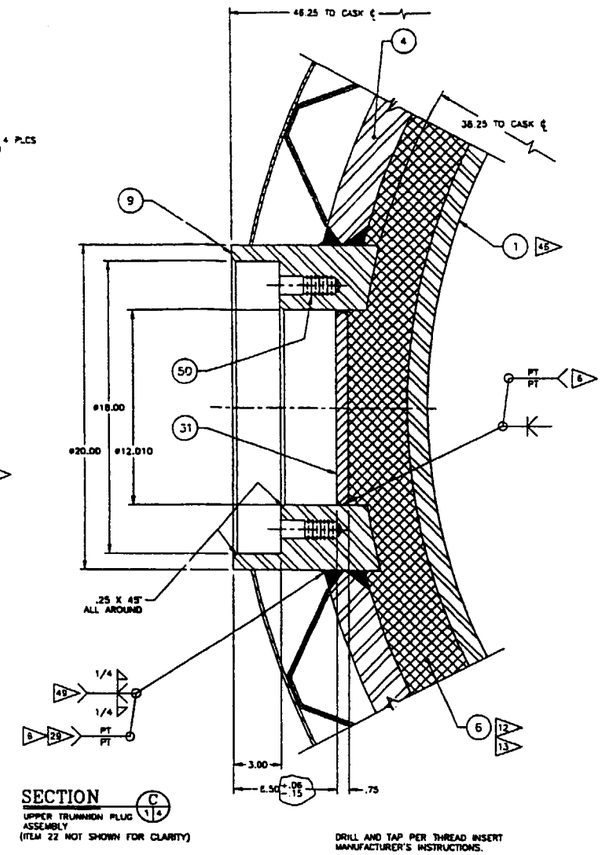

SECTION C 1/4

UPPER TRUNNION PLUG ASSEMBLY
(ITEM 22 NOT SHOWN FOR CLARITY)

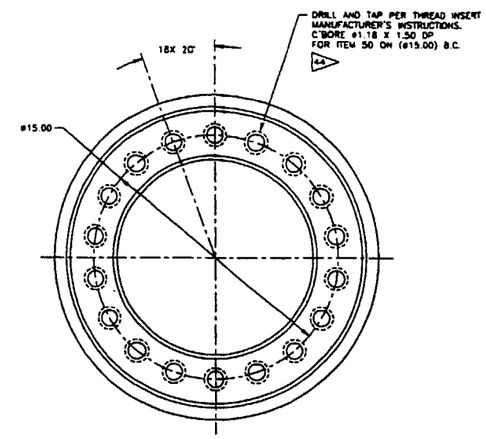

ITEM 9
UPPER TRUNNION SLEEVE

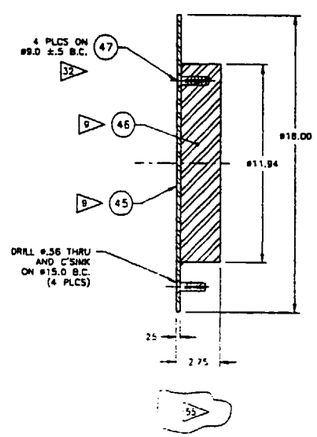

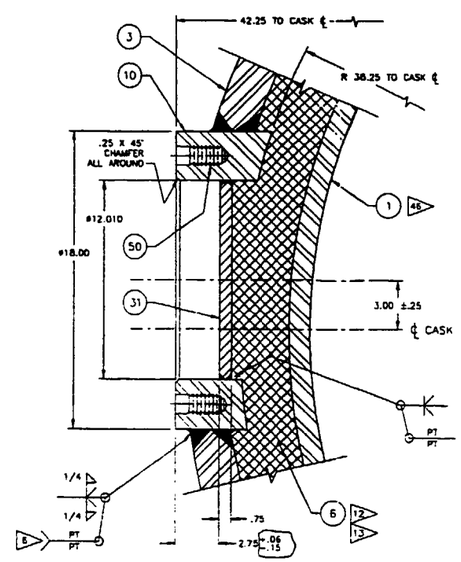

SECTION R 1/4

LOWER TRUNNION PLUG ASSEMBLY

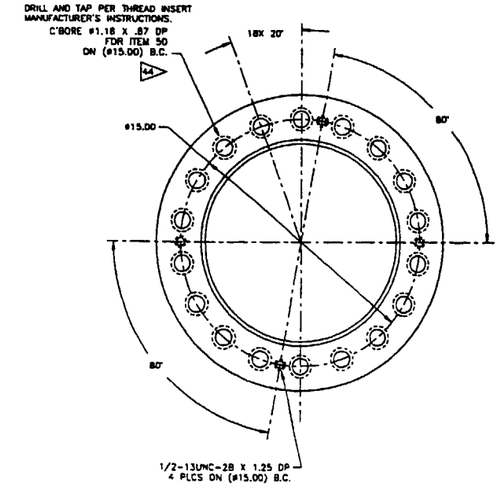

ITEM 10
LOWER TRUNNION SLEEVE

TRANSNUCLEAR WEST
CONTROLLED COPY NO. 2

U.S. Patent No. 4,780,269
5,406,600, 5,513,232 & 5,546,436
Proprietary Property of
Transnuclear, Inc.

This drawing may not be disclosed to others in whole or in part, or used for other than the transmitted purpose without written permission of Transnuclear, Inc.

ALL DIMENSIONS ARE APPLICABLE AT 68°F AND ALL TOLERANCING APPLIES AFTER WELDING AND FINAL MACHINING UNLESS NOTED OTHERWISE.

DIMENSIONS ARE IN INCHES AND DEGREES UNLESS NOTED OTHERWISE. DIMENSIONING AND TOLERANCING IN ACCORDANCE WITH ANSI Y14.5M-1982. UNLESS NOTED OTHERWISE, TOLERANCES SHALL BE AS FOLLOWS:
DIMENSIONS LESS THAN 6.00: ± .06
6.00 TO 48.00: ± .13
GREATER THAN 48.00: ± .25
ANGLES: ± 1°

BREAK AND DEBURR ALL SHARP EDGES

3rd ANGLE PROJECTION

DO NOT SCALE DRAWING

TRANSNUCLEAR WEST

TITLE: SAFETY ANALYSIS REPORT
NUHOMS® MP187
MULTI-PURPOSE CASK
MAIN ASSEMBLY

FILE NO.	DWG. NO.	SCALE	SHEET	REV. NO.
NUH005.4001	NUH-05-4001	NONE	4 OF 6	13

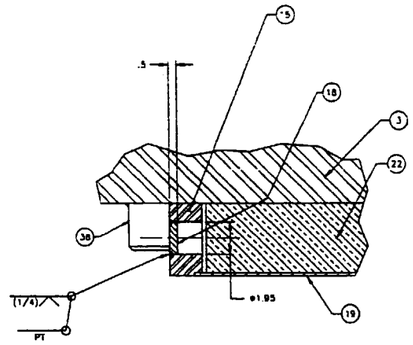

SECTION Q 2|5 50
BOTTOM END ONLY
(TYPICAL 12 PLCS)

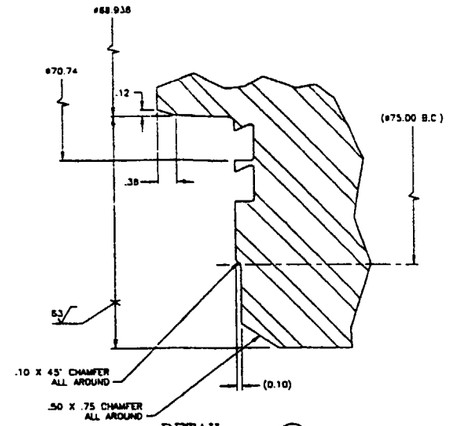

DETAIL 4 3|5
TOP CLOSURE PLATE SEAL

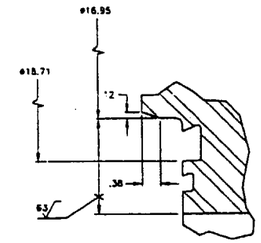

DETAIL 5 3|5
RAM CLOSURE PLATE SEAL

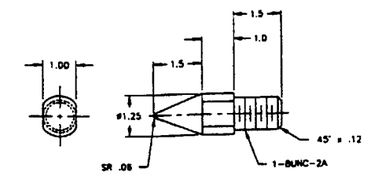

ITEM 44
TAPERED PIN

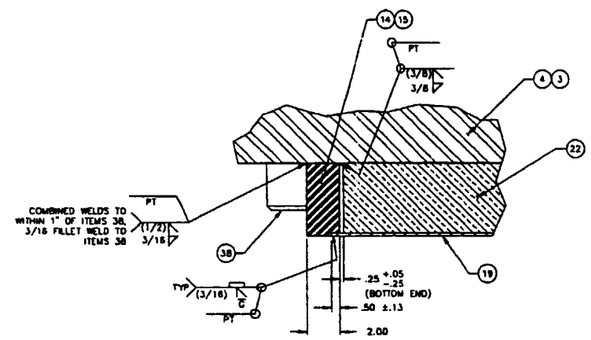

SECTION W 2|5
(TYPICAL FOR TOP AND BOTTOM NEUTRON SHIELD RING EXCEPT AS NOTED, ROTATED FOR CLARITY)

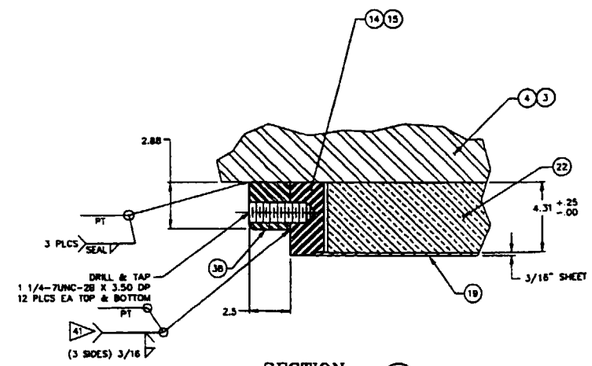

SECTION P 2|5
(TYPICAL FOR TOP AND BOTTOM NEUTRON SHIELD RING)

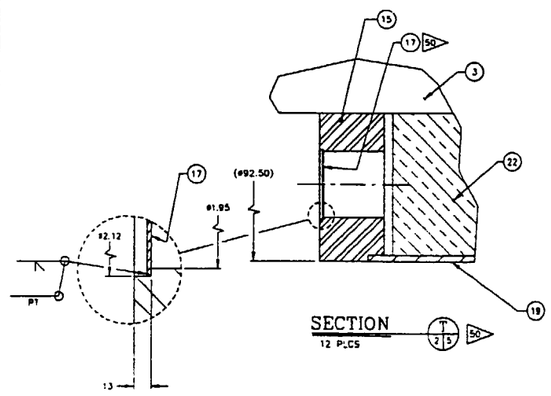

SECTION T 2|5 50
12 PLCS

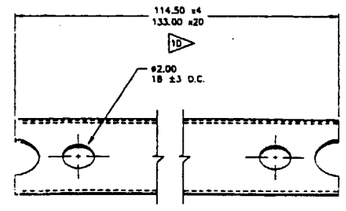

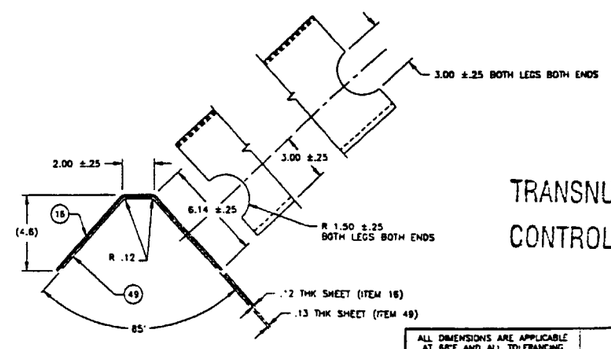

NSP SUPPORT ANGLE ASSEMBLY 14
TYPICAL

TRANSNUCLEAR WEST
CONTROLLED COPY NO. 2

U.S. Patent No. 4,780,269
5,406,600, 5,513,232 & 5,546,436
Proprietary Property of
Transnuclear, Inc.

This drawing may not be disclosed to others in whole or in part, or used for other than the transmitted purpose without written permission of Transnuclear, Inc.

ALL DIMENSIONS ARE APPLICABLE AT BEF AND ALL TOLERANCING APPLIES AFTER WELDING AND FINAL MACHINING UNLESS NOTED OTHERWISE.

DIMENSIONS ARE IN INCHES AND DEGREES UNLESS NOTED OTHERWISE. DIMENSIONING AND TOLERANCING IN ACCORDANCE WITH ANSI Y14.5M-1982, UNLESS NOTED OTHERWISE. TOLERANCES SHALL BE AS FOLLOWS
DIMENSIONS LESS THAN 6.00: ± .06
6.00 TO 48.00: ± .13
GREATER THAN 48.00: ± .25
ANGLES: ± 1°

BREAK AND DEBURR ALL SHARP EDGES

3rd ANGLE PROJECTION

DO NOT SCALE DRAWING

TRANSNUCLEAR WEST

SAFETY ANALYSIS REPORT
NUHOMS® MP187
MULTI-PURPOSE CASK
MAIN ASSEMBLY

FILE NO	DWG NO	SCALE	SHEET	REV NO
NUH005.4001	NUH-05-4001	NONE	5 OF 6	13

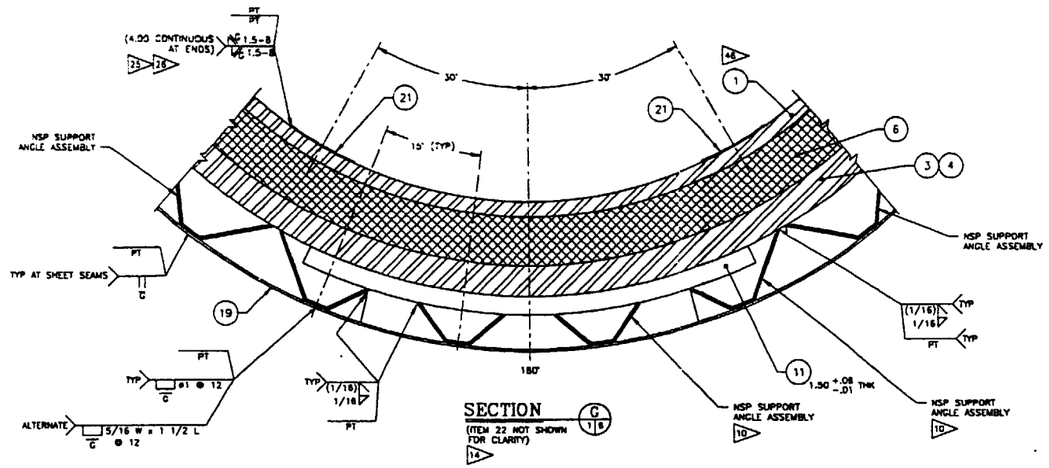

SECTION C 1/6
(ITEM 22 NOT SHOWN FOR CLARITY)

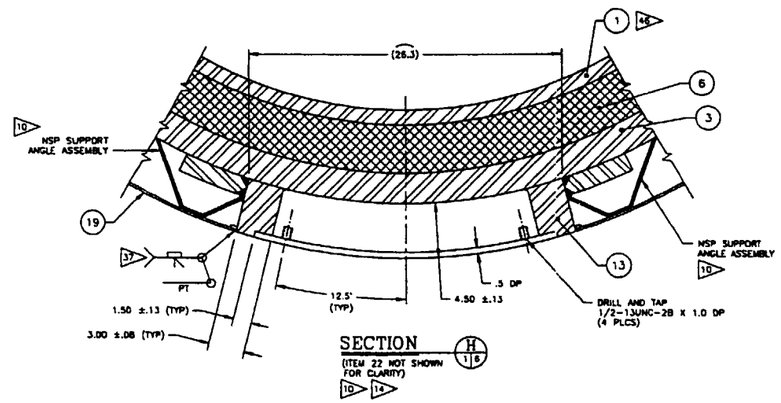

SECTION H 1/6
(ITEM 22 NOT SHOWN FOR CLARITY)

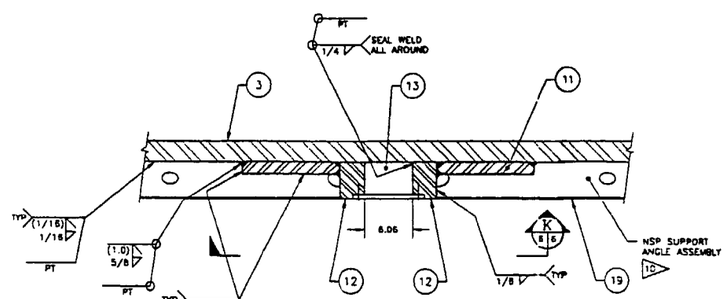

DETAIL 3 1/6
(ITEM 22 NOT SHOWN FOR CLARITY)

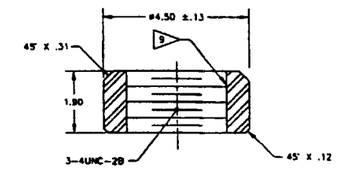

ITEM 41
THREADED INSERT

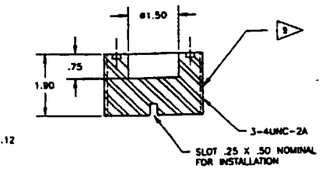

ITEM 43
ITEM 42
PLUG

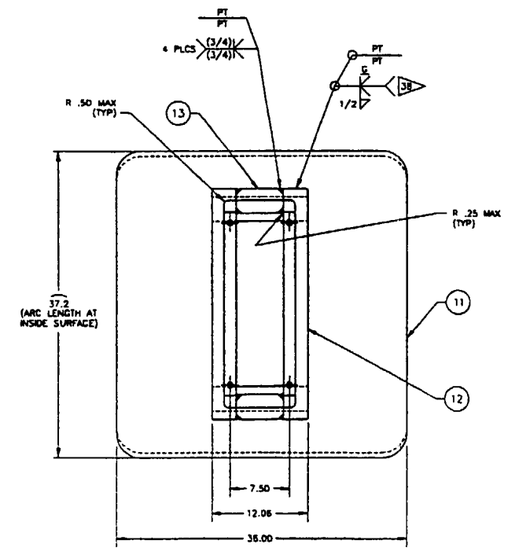

VIEW K 8 5

TRANSNUCLEAR WEST CONTROLLED COPY NO. 2

U.S. Patent No. 4,780,269
5,406,600, 5,513,232 & 5,546,436
Proprietary Property of
Transnuclear, Inc.

This drawing may not be disclosed to others in whole or in part, or used for other than the transmitted purpose without written permission of Transnuclear, Inc

ALL DIMENSIONS ARE APPLICABLE AT RET AND ALL TOLERANCING APPLIES AFTER WELDING AND FINAL MACHINING UNLESS NOTED OTHERWISE.

DIMENSIONS ARE IN INCHES AND DEGREES UNLESS NOTED OTHERWISE. DIMENSIONING AND TOLERANCING IN ACCORDANCE WITH ANSI Y14.5M-1982. UNLESS NOTED OTHERWISE, TOLERANCES SHALL BE AS FOLLOWS:
DIMENSIONS LESS THAN 6.00: ± .06
6.00 TO 48.00: ± .13
GREATER THAN 48.00: ± .25
ANGLES: ± 1°

BREAK AND DEBURR ALL SHARP EDGES

3rd ANGLE PROJECTION

DO NOT SCALE DRAWING

TRANSNUCLEAR WEST

TITLE: SAFETY ANALYSIS REPORT
NUHOMS®-MP187
MULTI-PURPOSE CASK
MAIN ASSEMBLY

FILE NO.	DWG NO	SCALE	SHEET	REV. NO
NUH005.4001	NUH-05-4001	NONE	6 OF 6	13

REV	DESCRIPTION:	DRAWN:	ORIGINATOR:	VERIFIED:	APPROVED:	LICENSING:
8	AMENDMENT APPLICATION No. 4	RGP 3/6/00	3-15-00	3/15/00	3.15.00	3/16/00

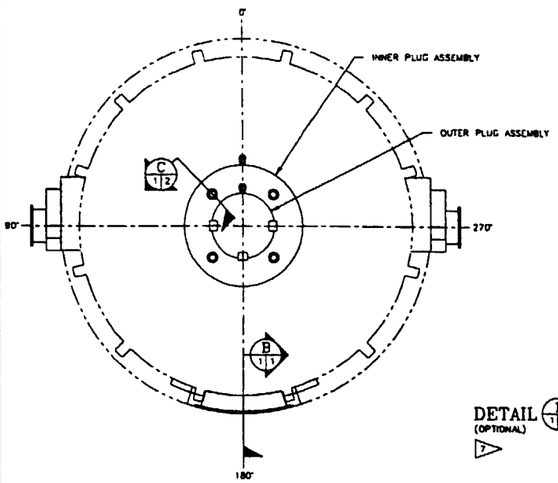

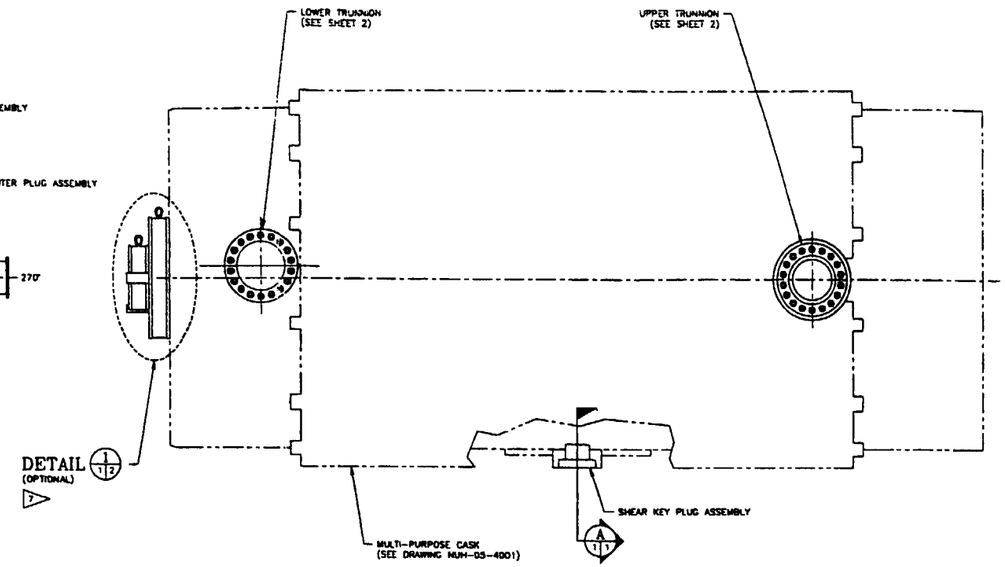

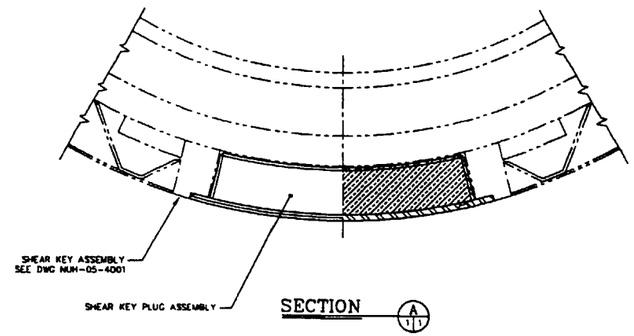

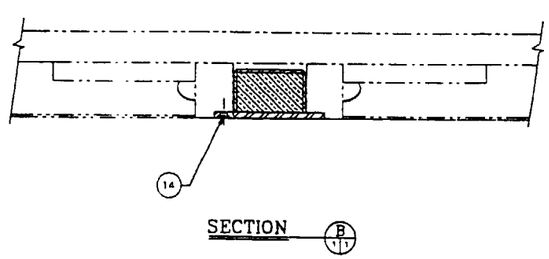

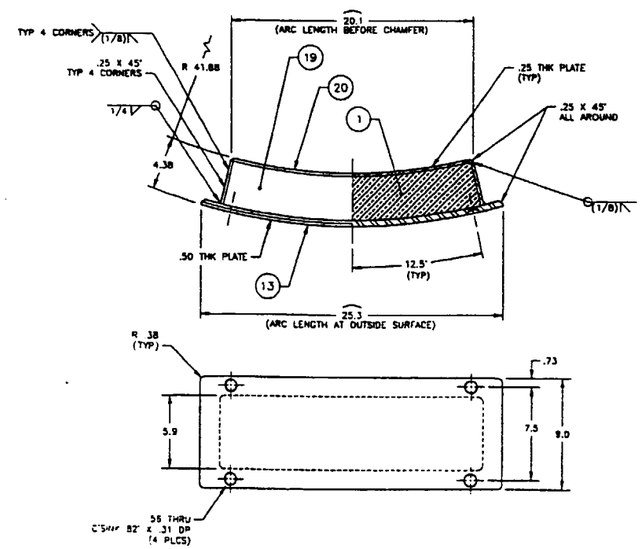

KEY PLUG ASSEMBLY 7

NOTES:

1. ALL WELDING SHALL BE PERFORMED BY WELDERS AND WELDING OPERATORS QUALIFIED IN ACCORDANCE WITH AWS D1.1 OR ASME SECTION IX. ALL WELDS SHALL BE VISUALLY INSPECTED PER AWS, OR ASME NB-4424.
2. ADJUST DIMENSIONS AS NECESSARY TO PROVIDE A FREE SLIDING FIT WITHIN THE SHEAR KEY ASSEMBLY.
3. CHAMFER OUTER PLUG COVER (ITEM 2) TO ALLOW CLEARANCE FOR SUPPORT BRACKET (ITEM 11).
4. NUT TACK WELD IS NOT A STRUCTURAL LOAD BEARING ITEM. FABRICATOR MAY SUBSTITUTE ALTERNATE DETAIL FOR INSTALLATION OF ITEM 8.
5. BUTT WELD ENDS OF ROLLED PLATES TO MAKE SLEEVES. - ONLY VISUAL INSPECTION IS REQUIRED.
6. OUTSTANDING LEG OF ANGLE TO BE CUT TO GIVE A SNUG, FREE SLIDING FIT FOR OUTER PLUG ASSEMBLY. FABRICATOR MAY SUBSTITUTE AN EQUIVALENT SIZE ANGLE AND/OR MATERIAL FOR ITEM 11.
7. ALL ASSEMBLIES SHOWN ON THIS DRAWING MAY BE USED FOR ON-SITE FUEL TRANSFER AND/OR STORAGE OPERATIONS PERFORMED IN ACCORDANCE WITH THE RULES OF 10CFR72. THE USE OF THESE ASSEMBLIES IS OPTIONAL FOR ONSITE TRANSFER AND ARE NOT USED FOR 10CFR71 TRANSPORTATION PURPOSES.
8. ALTERNATIVE WELD JOINT PREPARATIONS (U, V, OR J GROOVES) MAY BE USED PROVIDED ALL ASME CODE CRITERIA ARE MET. THE SPECIFIED MINIMUM EFFECTIVE THROAT MUST BE MAINTAINED.
9. THREADED HOLES AND/OR LIFTING LUGS MAY BE ADDED TO EACH PART AS REQUIRED TO FACILITATE HANDLING OF THESE FINISHED COMPONENTS.

TRANSNUCLEAR WEST
CONTROLLED COPY NO. 2

ITEM NO	QTY REQD	PART OR IDENTIFYING NO	NOMENCLATURE OR DESCRIPTION	MATERIAL SPECIFICATION
21	72		HARDENED WASHER, 1.5 OD X .177 THK	ASTM F436
20	1		KEY PLUG BOTTOM PLATE	ASTM A240 TYPE 304
19	4		KEY PLUG SIDE PLATE	ASTM A240 TYPE 304
18	2		TRUNNION BACK, 1/4" THK PLATE	ASTM A240 TYPE 304
17	2		UPPER TRUNNION	ASME SA-182 GR F XM-19
16	2		LOWER TRUNNION	ASTM A182 GR F XM-19
15	72		SCREW, SOCKET HEAD CAP 1-8UNC-2A X 5.13 LG	ASTM A320 GR L43 CADMIUM PLATED OR ASTM A193 GR B7 CADMIUM PLATED OR ASTM A564 TYPE 630 OR ASTM A705 TYPE 630
14	4		FLAT HD HEX SOCKET CAP SCREW 1/2-13UNC-2A X 1.00 LG	ASTM A320 GR L43 *
13	1		KEY PLUG COVER PLATE	ASTM A240 TYPE 304
12	4		PLATE, 1/2" THK X 3.25 SQ	ASTM A283 GR C OR A36 OR A516 GR 70
11	3		OUTER PLUG SUPPORT BRACKET L8 X 3 1/2 X 1/2 X 2.50 WIDE	ASTM A36
10	4		BOLT, 1-8UNC-2A X 9.75 LG WITH STD WASHER	ASTM A193 GR B7
9	2		LIFTING EYES, DROP FORGED	HOT GALVANIZED FINISH
8	4		PIPE, 1" SCH 40	ASTM A106 GR B
7	1		INNER PLUG INSIDE SLEEVE ROLLED PLATE 1/4" THK	ASTM A283 GR C OR A36 OR A516 GR 70
6	1		INNER PLUG SLEEVE ROLLED PLATE 1/4" THK	ASTM A283 GR C OR A36 OR A516 GR 70
5	2		INNER PLUG COVER PLATE 3/4" THK	ASTM A283 GR C OR A36 OR A516 GR 70
4	2		NUT, 1/2-13UNC-2B	ASTM A194 GR 7
3	1		OUTER PLUG SLEEVE ROLLED PLATE 1/4" THK	ASTM A283 GR C OR A36 OR A516 GR 70
2	2		OUTER PLUG COVER PLATE 3/4" THK	ASTM A283 GR C OR A36 OR A516 GR 70
1	A/R	NS-3	CASTABLE NEUTRON SHIELDING MATERIAL	

PARTS LIST

ALL DIMENSIONS ARE APPLICABLE AT 68°F AND ALL TOLERANCING APPLIES AFTER WELDING AND FINAL MACHINING UNLESS NOTED OTHERWISE.

DIMENSIONS ARE IN INCHES AND DEGREES UNLESS NOTED OTHERWISE. DIMENSIONING AND TOLERANCING IN ACCORDANCE WITH ANSI Y14.5M-1982, UNLESS NOTED OTHERWISE. TOLERANCES SHALL BE AS FOLLOWS: DIMENSIONS LESS THAN 6.00: ± .06; 6.00 TO 48.00: ± .13; GREATER THAN 48.00: ± .25; ANGLES: ± 1°

BREAK AND DEBURR ALL SHARP EDGES

3rd ANGLE PROJECTION

DO NOT SCALE DRAWING

U.S. Patent No. 4,780,269
5,406,600, 5,513,232
& 5,546,436
Proprietary Property of
Transnuclear, Inc.

This drawing may not be disclosed to others in whole or in part, or used for other than the transmitted purpose without written permission of Transnuclear, Inc.

TRANSNUCLEAR WEST

TITLE: SAFETY ANALYSIS REPORT
NUHOMS® MP187
MULTI-PURPOSE CASK
ON-SITE TRANSFER ARRANGEMENT

FILE NO.	DWG. NO	SCALE	SHEET	REV. NO.
NUH005.4003	NUH-05-4003	NONE	1 OF 2	8

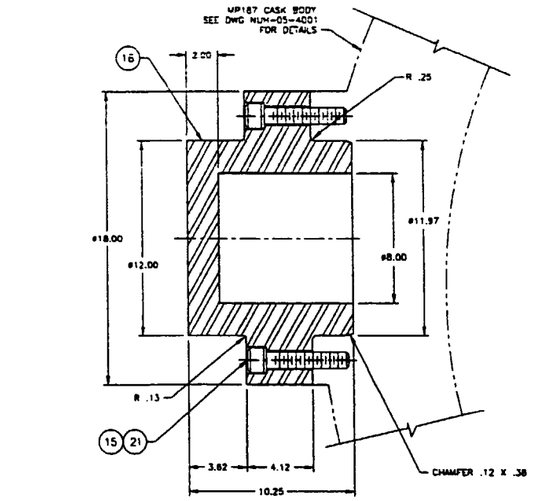

LOWER TRUNNION

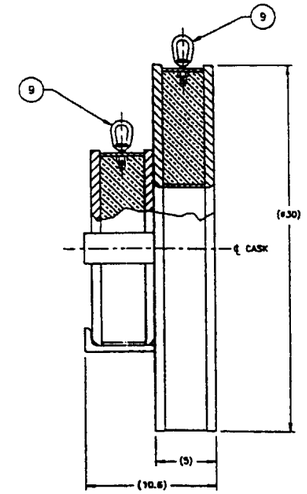

DETAIL 1/1:2
(MULTI-PURPOSE CASK NOT SHOWN FOR CLARITY)

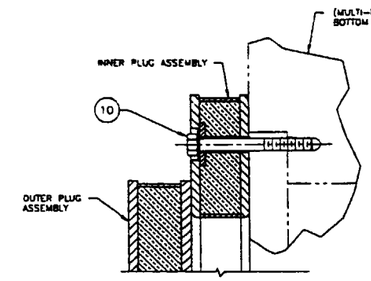

SECTION C/1:2

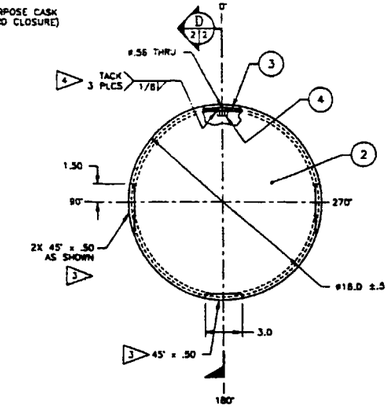

OUTER PLUG ASSEMBLY
(ITEM 9 NOT SHOWN FOR CLARITY)
ALL DIMENSIONS ARE ±.25 UNLESS NOTED OTHERWISE

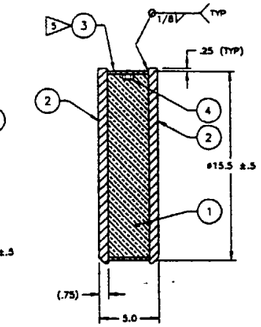

SECTION D/2:2

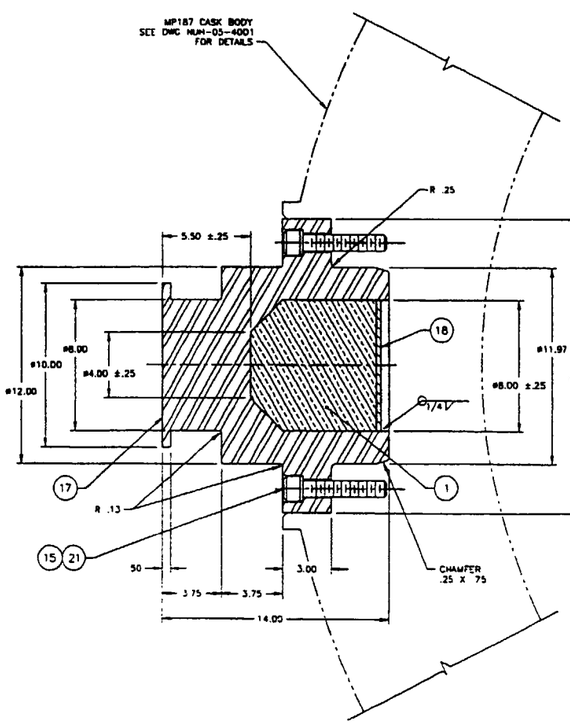

UPPER TRUNNION

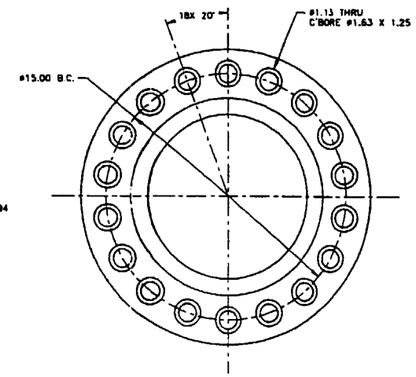

TYPICAL HOLE PATTERN
FOR UPPER & LOWER TRUNNIONS

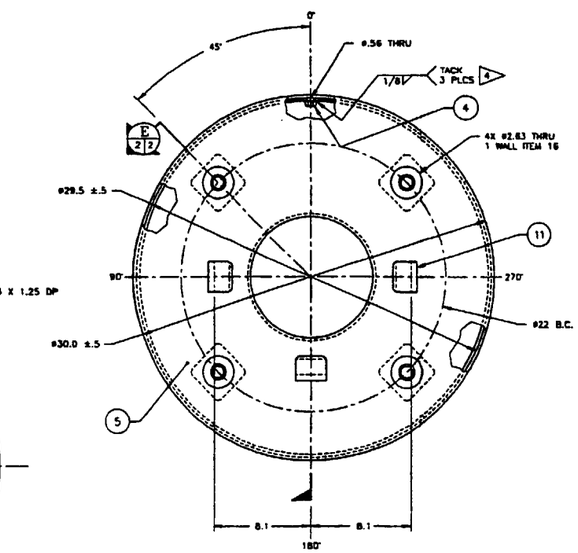

INNER PLUG ASSEMBLY
(ITEM 9 NOT SHOWN FOR CLARITY)
ALL DIMENSIONS ARE ±.25 UNLESS NOTED OTHERWISE

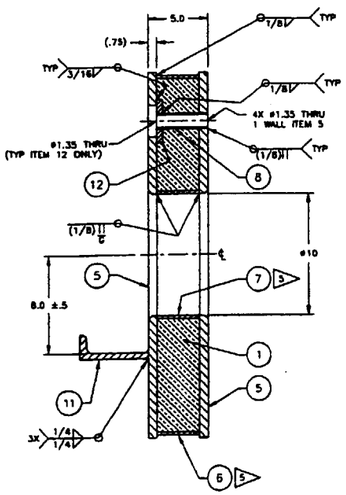

SECTION E/2:2

TRANSNUCLEAR WEST
CONTROLLED COPY NO. 2

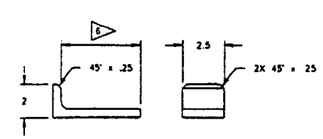

ITEM 11
OUTER PLUG SUPPORT BRACKET
ALL DIMENSIONS ARE ±.25

U.S. Patent No. 4,780,269
5,406,600, 5,513,232
& 5,546,436
Proprietary Property of
Transnuclear, Inc.

This drawing may not be disclosed to others in whole or in part, or used for other than the transmitted purpose without written permission of Transnuclear, Inc.

ALL DIMENSIONS ARE APPLICABLE AT 68°F AND ALL TOLERANCING APPLIES AFTER WELDING AND FINAL MACHINING UNLESS NOTED OTHERWISE.

DIMENSIONS ARE IN INCHES AND DEGREES UNLESS NOTED OTHERWISE. DIMENSIONING AND TOLERANCING IN ACCORDANCE WITH ANSI Y14.5M-1982. UNLESS NOTED OTHERWISE, TOLERANCES SHALL BE AS FOLLOWS:
DIMENSIONS LESS THAN 6.00: ± .06
6.00 TO 48.00: ± .13
GREATER THAN 48.00: ± .25
ANGLES: ± 1°

BREAK AND DEBURR ALL SHARP EDGES

3rd ANGLE PROJECTION

DO NOT SCALE DRAWING

TRANSNUCLEAR WEST

TITLE: SAFETY ANALYSIS REPORT
NUHOMS®-MP187
MULTI-PURPOSE CASK
ON-SITE TRANSFER ARRANGEMENT

FILE NO.	DWG NO.	SCALE	SHEET	REV. NO.
NUH005.4003	NUH-05-4003	NONE	2 OF 2	B

REV	DESCRIPTION:	DRAWN:	ORIGINATED:	VERIFIED:	APPROVED:	LICENSING:
13	AMENDMENT APPLICATION No. 4	RGP 3/6/00	3-6-00	3/9/00	3-9-00	3/9/00

TRANSNUCLEAR WEST

CONTROLLED COPY NO. 2

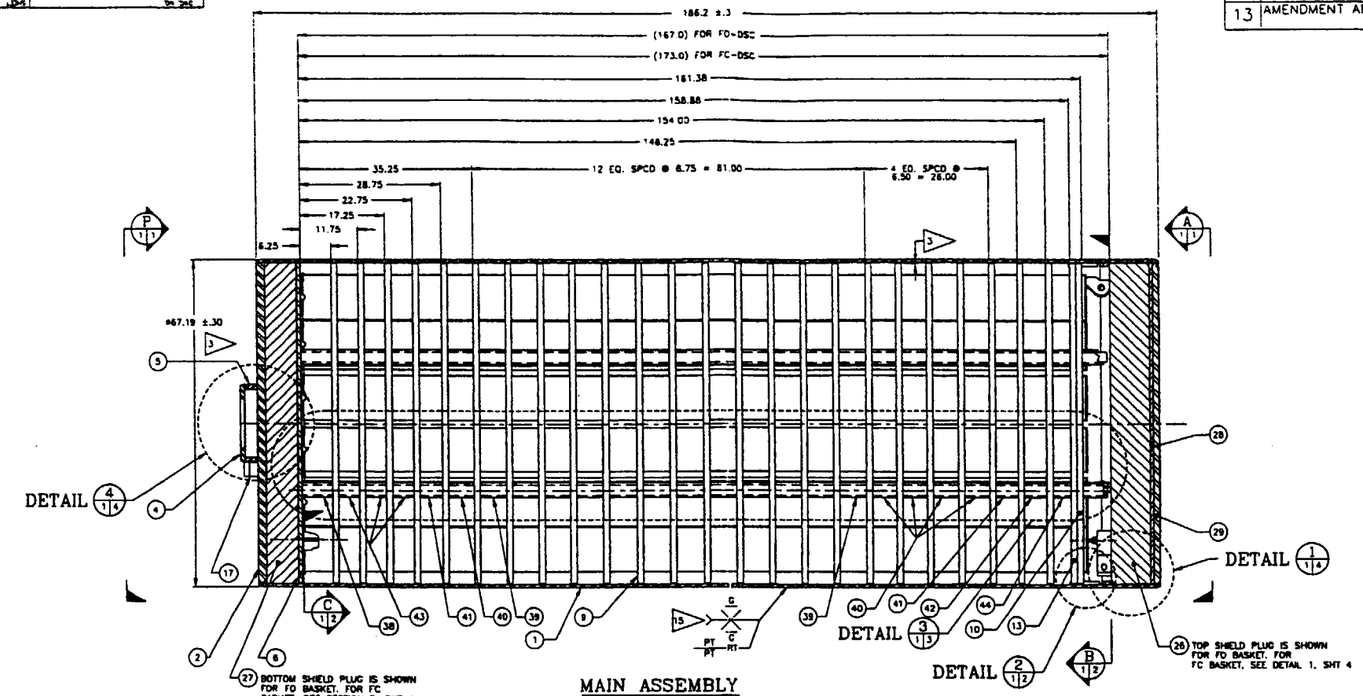

MAIN ASSEMBLY

FO-DSC SHOWN

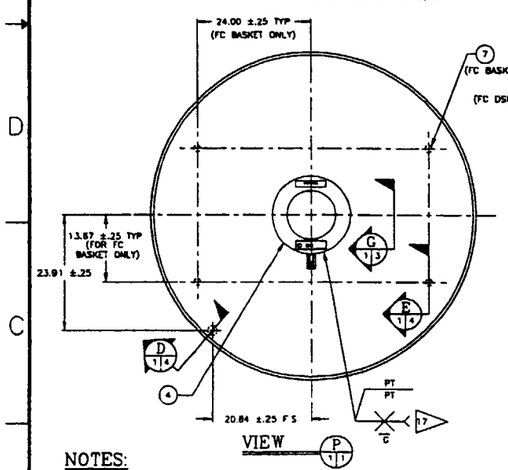

VIEW P/1.1

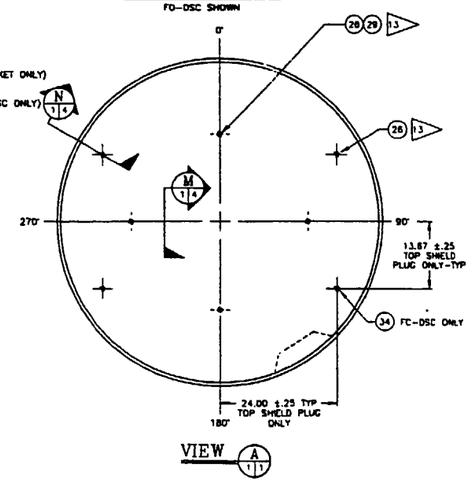

VIEW A/1.1

NOTES:

1. BASKET SHALL BE ASSEMBLED AND SUPPORT RODS (ITEM 16) TENSIONED TO 80 ±5 KIPS. TOP AND BOTTOM END SPACER SLEEVES SHALL BE TACK WELDED TO PREVENT ROTATION OF SLEEVES DURING TRANSPORTATION.
2. MINIMUM ACCEPTABLE AREAL BORON CONTENT LOADING IS 0.025 g/cm^2 ^{10}B.
3. TOLERANCES FOR INDIVIDUAL COMPONENTS SHALL BE CONTROLLED TO PROVIDE A MINIMUM GAP OF 0.06" WITH DSC SHELL AND BASKET ASSEMBLY WITH CENTERLINES COINCIDENT.
4. ALL WELDING SHALL BE PERFORMED IN ACCORDANCE WITH NB-4000 AND SECTION IX. WELDING PROCEDURES SHALL BE QUALIFIED IN ACCORDANCE WITH NB-4330, AND SECTION IX OF THE ASME CODE, EXCEPT THAT THE PROVISIONS OF QW-196.1.3 NEED NOT BE MET. SPOT WELD NUGGET SIZES SHALL BE MEASURED AT THE INTERFACE BETWEEN THE SHEETS BEING JOINED, AND SHALL EQUAL OR EXCEED THE SIZE SPECIFIED ON THE DRAWING. THE SHEAR TESTS OF QW-196.2.1 SHALL EQUAL OR EXCEED A MINIMUM STRENGTH OF 100 LBS PER SPOT WELD AND A MINIMUM AVERAGE STRENGTH OF 125 LBS. WELDS SHOWN TO BE SMOOTH OR FLUSH SHALL HAVE A MAXIMUM REINFORCEMENT OF .03 INCHES AND HAVE A TAPERED TRANSITION TO THE BASE MATERIAL SURFACE.
5. TWO LONGITUDINAL FULL PENETRATION WELD SEAMS ARE ALLOWED IN THE FLAT SIDES OF EACH GUIDE SLEEVE AT LOCATION OF FABRICATOR'S CHOICE. WELDS IN THE FLAT SHALL BE GROUND FLUSH OUTSIDE, AND SHALL NOT PROTRUDE INSIDE OF GUIDE SLEEVE. AS AN ALTERNATE, FABRICATOR MAY FORM GUIDE SLEEVE FROM ONE OR TWO PIECES OF MATERIAL WITH CORNER FILLET WELD(S) AS SHOWN. SEAMLESS OR WELDED AND DRAWN SLEEVES ARE ALSO ACCEPTABLE.
6. ALTERNATIVE WELD JOINT PREPARATIONS (U, V, OR J GROOVES) MAY BE USED PROVIDED ALL ASME CODE CRITERIA ARE MET. THE SPECIFIED MINIMUM EFFECTIVE THROAT MUST BE MAINTAINED.
7. JOINT SHALL BE PROGRESSIVELY INSPECTED PER REQUIREMENTS OF NB-5245 AT ROOT, EACH 1/4" DEPOSITED FILLER MATERIAL AND FINAL SURFACE.
8. MATERIALS, WELDING, AND INSPECTION FOR THESE ITEMS SHALL MEET STANDARD COMMERCIAL PRACTICES.
9. TAPPED HOLES FOR EYEBOLTS ARE PROVIDED IN TOP SPACER DISC (ITEM 10) FOR LIFTING BASKET ASSEMBLY DURING FABRICATION. REMOVE EYEBOLTS AFTER PLACEMENT OF BASKET IN SHELL ASSEMBLY.
10. ø1.25 HOLE THRU HOLE FOR SIPHON TUBE, ITEMS 9, 10 AND 13.
11. BLAST CLEAN ALL EXPOSED CARBON STEEL SURFACES (EXCEPT BOTTOM SHIELD PLUG) AND COAT WITH ELECTROLESS NICKEL OR EQUIVALENT COATING.
12. TYPE "A" AND TYPE "B" GUIDE SLEEVE ASSEMBLIES ARE LOCATED AS SHOWN. TYPE "A" GUIDE SLEEVE ASSEMBLIES INCLUDE TWO NEUTRON ABSORBER SHEETS (ITEM 14) ON THE SIDES ADJACENT TO TYPE "A" OR TYPE "B" GUIDE SLEEVES. TYPE "B" GUIDE SLEEVE ASSEMBLIES INCLUDE NEUTRON ABSORBER SHEETS (ITEM 14) ON ALL FOUR SIDES.
13. ITEMS 25, 28 AND 29 MAY BE DRILLED AND TAPPED TO FACILITATE LIFTING. HOLES SHALL NOT PENETRATE PLATE. 4 PLACES 3/4-10UNC-2B X 0.75 DEEP FOR ITEM 25, 0.50 DEEP FOR ITEM 28, 1.0 DEEP FOR ITEM 26.
14. SPACER DISC MATERIAL REQUIRES TESTING PER ASTM E-208 OR E-504 TO CONFIRM THAT IS BDT.
15. FULL PENETRATION LONGITUDINAL AND CIRCUMFERENTIAL BUTT WELDS ARE REQUIRED FOR ITEM 1 WITH 100% RADIOGRAPHIC EXAMINATION PER NB-5000. WELD JOINT DETAIL SHALL BE IN ACCORDANCE WITH ASME CODE. FINISHED INSIDE AND OUTSIDE SURFACE SHALL BE FLUSH WITH SURROUNDING SURFACES. GROUND WELD OR BASE METAL SHALL NOT BE REDUCED TO A THICKNESS BELOW .563". FINISHED THICKNESS OF ALL GROUND OR MACHINED AREAS SHALL BE VERIFIED BY UT.
16. THREAD SEALANT MAY BE USED FOR INSTALLATION OF THREADED ITEMS.
17. ITEM 5 MAY BE A PIPE SECTION OR A ROLLED RING LONGITUDINAL WELD AT LOCATION OF FABRICATOR'S CHOICE. FULL PENETRATION BUTT WELD IS IN ACCORDANCE WITH ASME CODE.
18. SPACER DISC SPACING SHALL BE MAINTAINED AS NOMINAL ±.13.
19. ENDS OF SUPPORT RODS (ITEM 16) SHALL NOT PROTRUDE BEYOND ENDS OF SPACER SLEEVES (ITEMS 37 AND 38) AND SHALL HAVE MAXIMUM .15" RECESS. ITEM 37 MAY BE FABRICATED AS TWO PIECES WITH THE SAME I.D. AND O.D. AND A COMBINED LENGTH EQUAL TO THAT SHOWN.
20. TOP EDGE OF ANGLE MAY BE BEVELLED OR FLARED. ANGLE TO BE ATTACHED TO GUIDE SLEEVE WITH OVERLAP AND FILLET WELDS.
21. ASME SA-564, TYPE 630 MATERIAL WILL BE SOLUTION TREATED AND AGE HARDENED TO ACHIEVE THE SPECIFIED Sy AND Su VALUES.
22. MECHANICAL PIN CONFIGURATION MAY BE USED AS AN ALTERNATIVE TO TACK WELD TO PROVIDE ASSURANCE THAT THE NUT WILL NOT LOOSEN.
23. THE GUIDE SLEEVE FLARED CONFIGURATION MAY BE ESTABLISHED BY EITHER A CUT OR PRESSED/FORMED FABRICATION METHOD.
24. THE OVERSLEEVE MAY BE FABRICATED FROM ONE PIECE OF MATERIAL, FOUR INDIVIDUAL PIECES OR ANY COMBINATION THEREOF. THE WELDING OF THE OVERSLEEVE TO THE GUIDE SLEEVE SHALL BE AS SHOWN ON THIS DRAWING.
25. A .12 INCH MINIMUM MACHINED RADIUS TRANSITION BETWEEN ITEMS 2 AND 5 IS AN ALTERNATIVE TO THE 1/8 INCH COVER FILLETS. MACHINED RADIUS MAY BE ONE OR BOTH SIDES. PT OF MACHINED RADIUS IS REQUIRED.
26. ALL OF THE WELDS OF THE DSC SHELL ASSEMBLY AND CLOSURE PLATES SHALL CONTAIN A MINIMUM OF 2 LAYERS THROUGH THE THICKNESS OF THE WELD.
27. INTERNAL STIFFENERS AND CONNECTIONS SHALL NOT REDUCE AVERAGE LEAD THICKNESS BELOW 3.50 INCHES.
28. INTERNAL STIFFENERS AND CONNECTIONS SHALL NOT REDUCE AVERAGE LEAD THICKNESS BELOW 4.00 INCHES.
29. MAXIMUM RADIAL GAP BETWEEN ITEM 27 AND ITEM 1 IN SECTION (D) FOR FO-DSC, AND BETWEEN ITEM 50 AND ITEM 1 IN SECTION (D) FOR THE FC-DSC IS .12".
30. INSPECTION SHALL BE PERFORMED IN ACCORDANCE WITH ASME CODE SECTION III, DIVISION 1, SUBSECTION NB ARTICLE NB-5000.
31. DIMENSIONS NOT SPECIFICALLY TOLERANCED ARE FOR INFORMATION ONLY. BLOCK TOLERANCES DO NOT APPLY.

U.S. Patent No. 4,780,269 & 5,438,597

Proprietary Property of Transnuclear, Inc.
This drawing may not be disclosed to others in whole or in part, or used for other than the transmitted purpose without written permission of Transnuclear, Inc.

ITEM NO	QTY REQD	QTY REQD	PART OR IDENTIFYING NO.	NOMENCLATURE OR DESCRIPTION	MATERIAL SPECIFICATION
52	--	1		PLATE	ASME SA-240 TYPE 304
51	--	A/R		PLATE, STIFFENING	ASME SA-240 TYPE 304
50	--	1		BOTTOM PLUG SIDE CASING	ASME SA-240 TYPE 304
49	--	1		BOTTOM PLUG TOP CASING	ASME SA-240 TYPE 304
48	72	72		PLATE, .083 THK	ASME SA-240 TYPE 304
47	96	96		STOP PLATE, .50 X 1.00 X .12 THK	ASME SA-240 TYPE 304
46	--	4		PLATE, 1/4" THK FORMED TO 1.25" X 1.25" ANGLE	ASME SA-240, TYPE 304
45	--	4		ANGLE, 1 1/4 X 1 1/4 X 1/4" THK	ASME SA-479, TYPE 304
44	4	4		SPACER SLEEVE, 3.625 LG.	ASME SA-564, TYPE 630 Sy (MIN) = 115 KSI Su (MIN) = 140 KSI
43	12	12		SPACER SLEEVE, 4.25 LG.	ASME SA-564, TYPE 630 Sy (MIN) = 115 KSI Su (MIN) = 140 KSI
42	4	4		SPACER SLEEVE, 4.50 LG.	ASME SA-564, TYPE 630 Sy (MIN) = 115 KSI Su (MIN) = 140 KSI
41	8	8		SPACER SLEEVE, 4.75 LG.	ASME SA-564, TYPE 630 Sy (MIN) = 115 KSI Su (MIN) = 140 KSI
40	20	20		SPACER SLEEVE, 5.25 LG.	ASME SA-564, TYPE 630 Sy (MIN) = 115 KSI Su (MIN) = 140 KSI
39	48	48		SPACER SLEEVE, 5.50 LG.	ASME SA-564, TYPE 630 Sy (MIN) = 115 KSI Su (MIN) = 140 KSI
38	4	4		BOTTOM END SPACER SLEEVE	ASME SA-564, TYPE 630 Sy (MIN) = 115 KSI Su (MIN) = 140 KSI
37	4	4		TOP END SPACER SLEEVE	ASME SA-564, TYPE 630 Sy (MIN) = 115 KSI Su (MIN) = 140 KSI
36	--	A/R		PLATE, STIFFENING	ASTM A36
35				(NOT USED)	
34	--	4		TOP PLUG LIFTING LUG	ASTM A36
33	--	1		TOP PLUG TOP CASING	ASTM A36
32	--	1		TOP PLUG SIDE CASING	ASTM A36
31	--	1		TOP PLUG BOTTOM CASING	ASTM A36
30	2	2		VENT AND SIPHON PORT COVER PLATE	ASME SA-240, TYPE 304
29	1	1		OUTER TOP COVER PLATE, 1 1/4" THK	ASME SA-240, TYPE 304
28	1	1		INNER TOP COVER PLATE, 3/4" THK	ASME SA-240, TYPE 304
27	1	--		BOTTOM SHIELD PLUG	ASTM A36
26	1	--		TOP SHIELD PLUG	ASTM A36
25	1	1		SUPPORT RING	ASME SA-240, TYPE 304
24	4	4		LIFTING LUG	ASTM A240, TYPE 304
23	2	2		QUICK CONNECT, 1/2" MALE	STAINLESS STEEL
22	1	1		MALE CONNECTOR, 3/4" TUBE X 3/4" MNPT	STAINLESS STEEL
21	1	1		SIPHON TUBING, 3/4 OD X .05 WALL	AISI-304
20	1	1		SIPHON & VENT BLOCK	ASME SA-240, TYPE 304
19	2	2		KEY	ASTM A240, TYPE 304
18	72	72		EXTENSION PLATE	ASTM A240, TYPE 304
17	1	1		SHEAR KEY	ASTM A240, TYPE 304
16	4	4		SUPPORT ROD	ASME SA-564, TYPE 630 Sy (MIN) = 115 KSI Su (MIN) = 140 KSI
15				(NOT USED)	
14	72	72	BORAL	NEUTRON ABSORBER SHEET	
13	1	1		SPACER DISC - TYPE "B"	ASME SA-537, CL 2 OR SA-517 OR A, B, E, F, J, P
12	72	72		OVERSLEEVE	ASME SA-240, TYPE 304
11	24	24		GUIDE SLEEVE	ASME SA-240, TYPE 304
10	1	1		SPACER DISC - TYPE "A"	ASME SA-537, CL 2 OR SA-517 OR A, B, E, F, J, P
9	24	24		SPACER DISC - TYPE "C"	ASME SA-537, CL 2 OR SA-517 OR A, B, E, F, J, P
8				(NOT USED)	
7	--	4		BOTTOM PLUG POST	ASTM A240, TYPE 304
6	1	1		INNER BOTTOM COVER	ASME SA-240, TYPE 304
5	1	1		GRAPPLE RING SUPPORT	ASME SA-240, TYPE 304
4	1	1		GRAPPLE RING	ASME SA-240, TYPE 304
3	1	--		LEAD SHIELDING	ASTM B29 LEAD
2	1	1		OUTER BOTTOM COVER	ASME SA-240, TYPE 304
1	1	1		CYLINDRICAL SHELL	ASME SA-240, TYPE 304
	X			FO-DSC	
		X		FC-DSC	

PARTS LIST

ALL DIMENSIONS ARE APPLICABLE AT EBT AND ALL TOLERANCING APPLIES AFTER WELDING AND FINAL MACHINING UNLESS NOTED OTHERWISE.

DIMENSIONS ARE IN INCHES AND DEGREES UNLESS NOTED OTHERWISE. DIMENSIONING AND TOLERANCING IN ACCORDANCE WITH ANSI Y14.5M-1982, UNLESS NOTED OTHERWISE. TOLERANCES SHALL BE AS FOLLOWS: DIMENSIONS LESS THAN 8.00: ± .06; 8.00 TO 48.00: ± .13; GREATER THAN 48.00: ± .25; ANGLES: ± 1°

BREAK AND DEBURR ALL SHARP EDGES

3rd ANGLE PROJECTION

DO NOT SCALE DRAWING

TRANSNUCLEAR WEST

TITLE: SAFETY ANALYSIS REPORT NUHOMS® FO-DSC & FC-DSC FOR PWR FUEL MAIN ASSEMBLY

FILE NO	DWG NO	SCALE	SHEET	REV NO
NUH005.4004	NUH-05-4004	NONE	1 OF 4	13

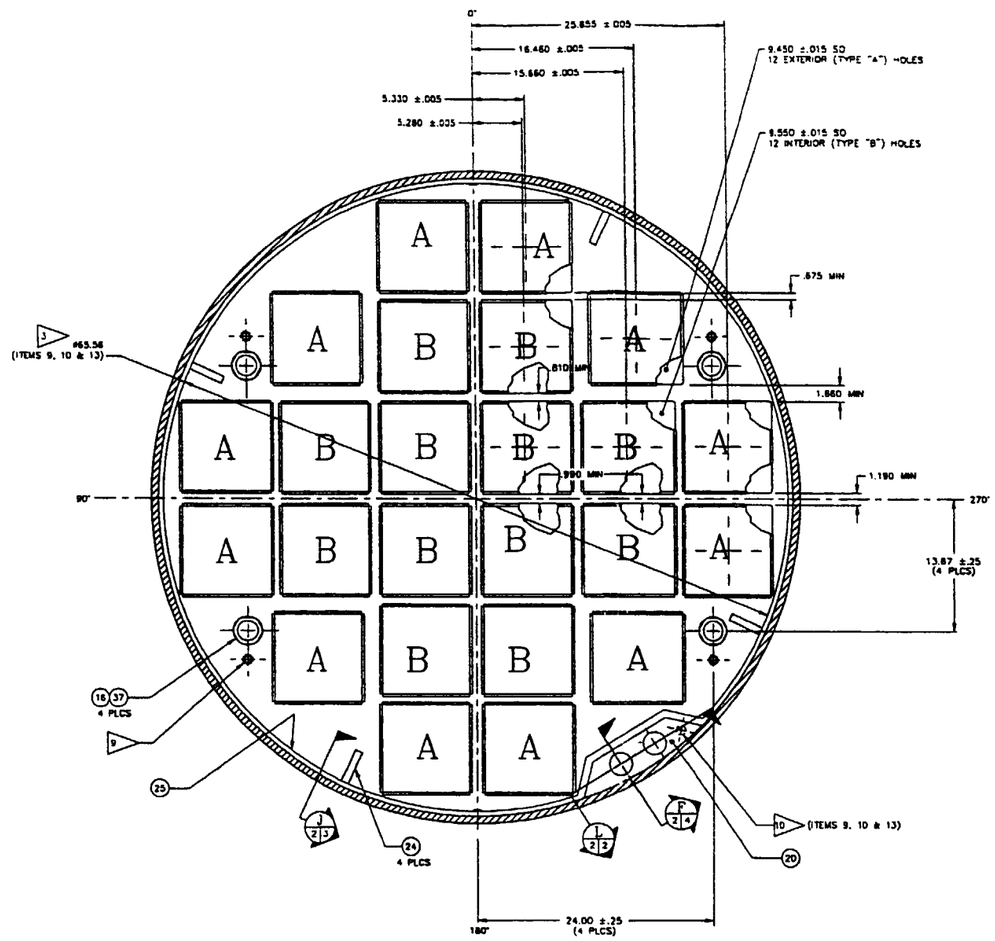

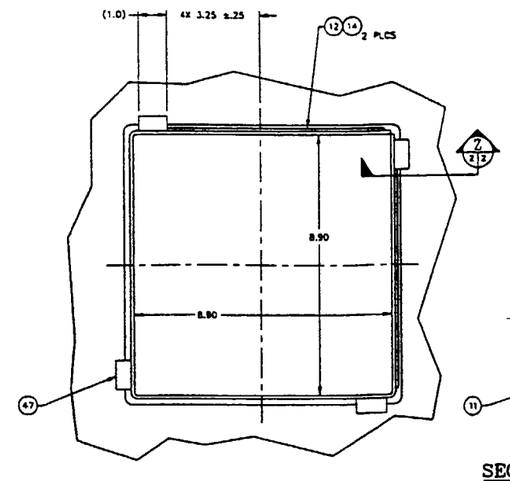

SECTION C 1/2
TYPE "A" GUIDE SLEEVE ASSY

SECTION 7 2/2
4X TYPE "A" AND "B" GUIDE SLEEVES

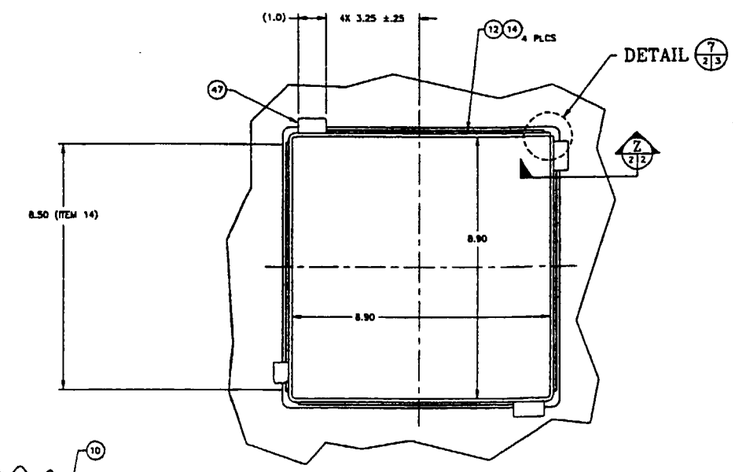

SECTION B 1/2

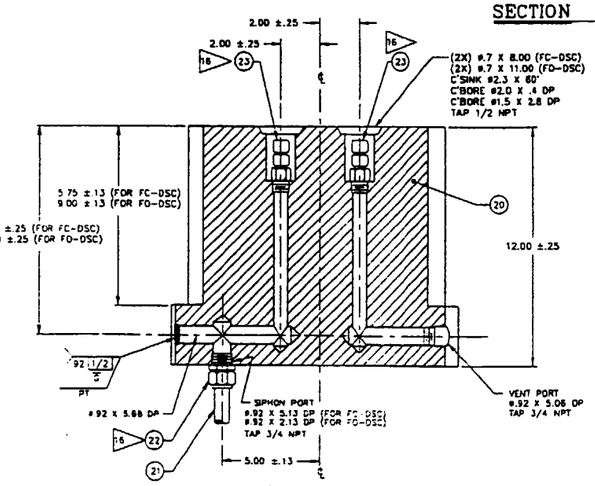

SECTION L 1/2

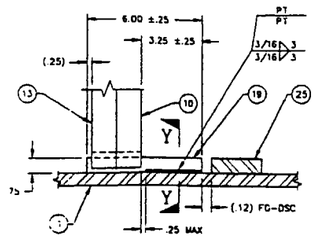

DETAIL 2 1/2
AT AZIMUTH 0° AND 180°

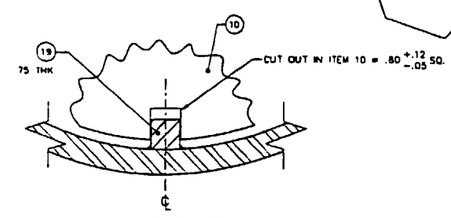

SECTION Y 2/2
(ITEM 10 AND 13 ONLY) AZIMUTH 0° AND 180°, ALIGNMENT KEYWAY

SECTION C 1/2
TYPE "B" GUIDE SLEEVE ASSY

TRANSNUCLEAR WEST
CONTROLLED COPY NO. 2

U.S. Patent No. 4,780,269 & 5,438,597
Proprietary Property of
Transnuclear, Inc.
This drawing may not be disclosed to others in whole or in part, or used for other than the transmitted purpose without written permission of Transnuclear, Inc.

ALL DIMENSIONS ARE APPLICABLE AT 68°F AND ALL TOLERANCING APPLIES AFTER WELDING AND FINAL MACHINING UNLESS NOTED OTHERWISE.

DIMENSIONS ARE IN INCHES AND DEGREES UNLESS NOTED OTHERWISE. DIMENSIONING AND TOLERANCING IN ACCORDANCE WITH ANSI Y14.5M-1982. UNLESS NOTED OTHERWISE, TOLERANCES SHALL BE AS FOLLOWS
DIMENSIONS LESS THAN 6.00: ± .06
6.00 TO 48.00: ± .13
GREATER THAN 48.00: ± .25
ANGLES: ± 1°

BREAK AND DEBURR ALL SHARP EDGES

3rd ANGLE PROJECTION

DO NOT SCALE DRAWING

TRANSNUCLEAR WEST

TITLE: SAFETY ANALYSIS REPORT
NUHOMS® FO-DSC & FC-DSC
FOR PWR FUEL
MAIN ASSEMBLY

FILE NO	DWG NO	SCALE	SHEET	REV NO
NUHM05 4004	NUH-05-4004	NONE	2 OF 4	13

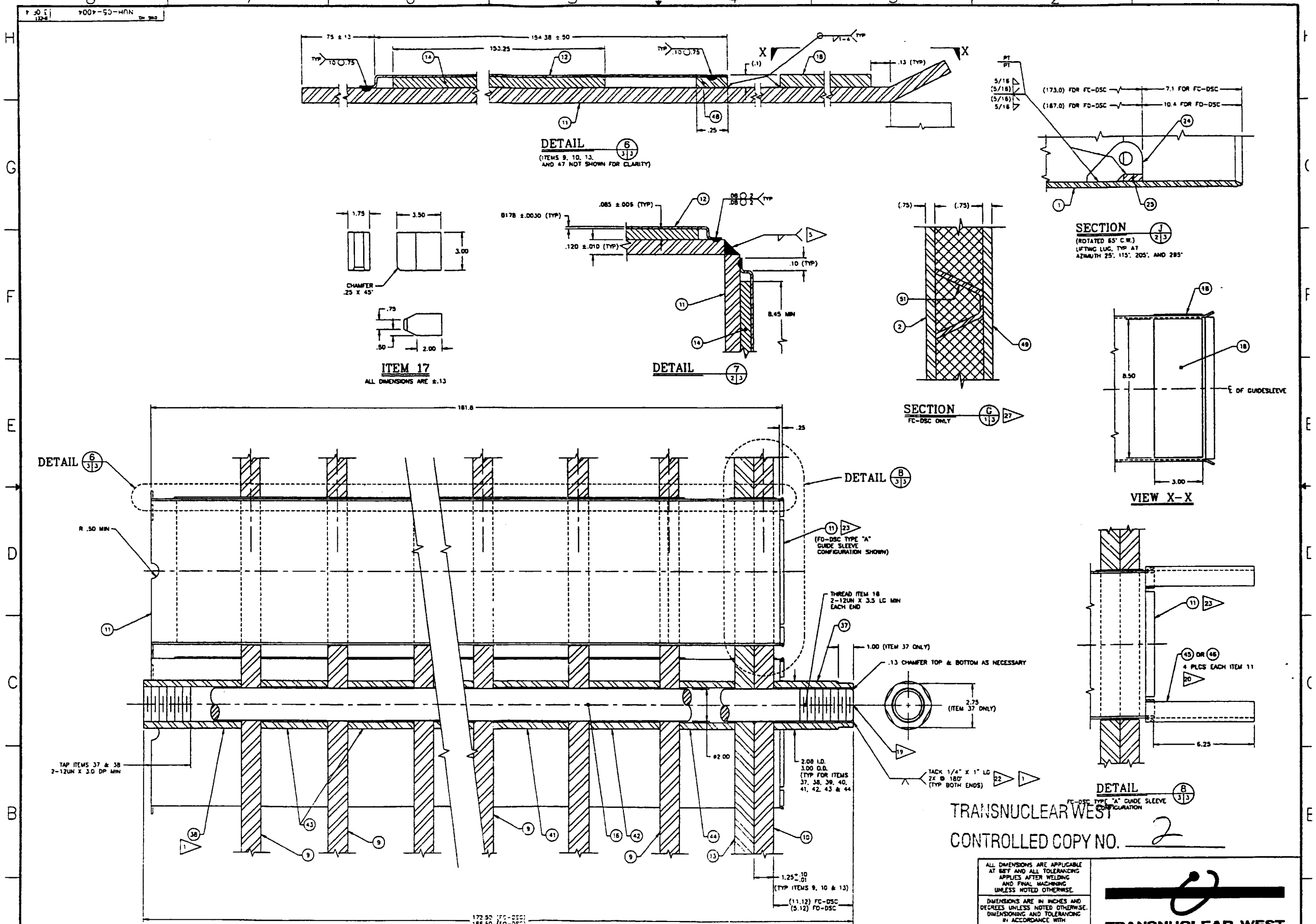

TRANSNUCLEAR WEST

CONTROLLED COPY NO. 2

U.S. Patent No. 4,780,269 & 5,438,597
Proprietary Property of
Transnuclear, Inc.

This drawing may not be disclosed to others in whole or in part, or used for other than the transmitted purpose without written permission of Transnuclear, Inc.

ALL DIMENSIONS ARE APPLICABLE AT 68°F AND ALL TOLERANCING APPLIES AFTER WELDING AND FINAL MACHINING UNLESS NOTED OTHERWISE.

DIMENSIONS ARE IN INCHES AND DEGREES UNLESS NOTED OTHERWISE. DIMENSIONING AND TOLERANCING IN ACCORDANCE WITH ANSI Y14.5M-1982. UNLESS NOTED OTHERWISE. TOLERANCES SHALL BE AS FOLLOWS:
DIMENSIONS LESS THAN 6.00: ±.06
6.00 TO 48.00: ±.13
GREATER THAN 48.00: ±.25
ANGLES: ±1°

BREAK AND DEBURR ALL SHARP EDGES

3rd ANGLE PROJECTION

DO NOT SCALE DRAWING

TRANSNUCLEAR WEST

TITLE: SAFETY ANALYSIS REPORT
NUHOMS® FO-DSC & FC-DSC
FOR PWR FUEL
MAIN ASSEMBLY

FILE NO	DWG NO	SCALE	SHEET	REV NO
NUH005 4004	NUH-05-4004	NONE	3 OF 4	13

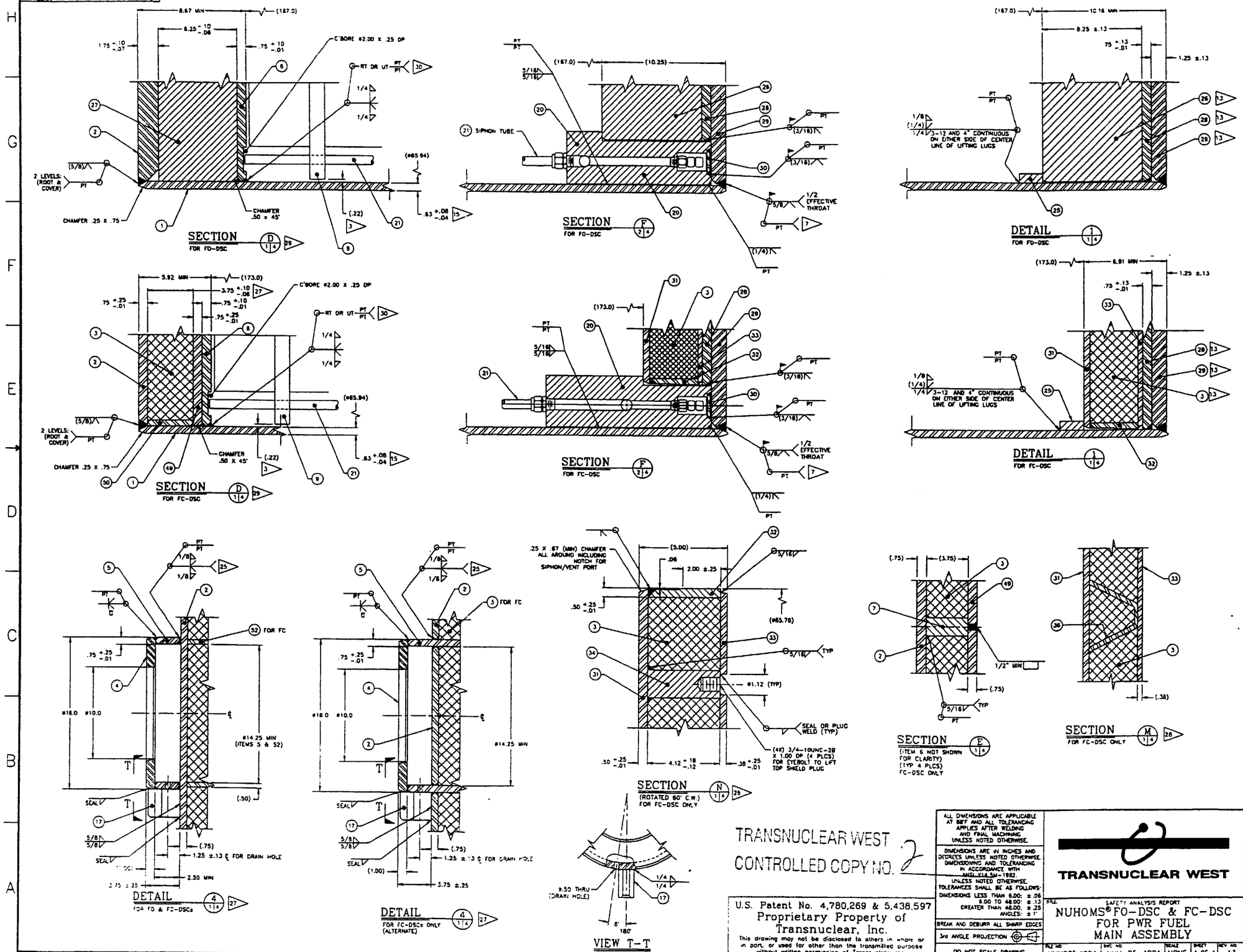

TRANSNUCLEAR WEST
CONTROLLED COPY NO. 2

U.S. Patent No. 4,780,269 & 5,438,597
Proprietary Property of
Transnuclear, Inc.

This drawing may not be disclosed to others in whole or in part, or used for other than the transmitted purpose without written permission of Transnuclear, Inc

ALL DIMENSIONS ARE APPLICABLE AT BEF AND ALL TOLERANCING APPLIES AFTER WELDING AND FINAL MACHINING UNLESS NOTED OTHERWISE.

DIMENSIONS ARE IN INCHES AND DEGREES UNLESS NOTED OTHERWISE. DIMENSIONING AND TOLERANCING IN ACCORDANCE WITH ANSI Y14.5M-1982.

UNLESS NOTED OTHERWISE, TOLERANCES SHALL BE AS FOLLOWS:
DIMENSIONS LESS THAN 6.00: ±.06
6.00 TO 48.00: ±.13
GREATER THAN 48.00: ±.25
ANGLES: ±1°

BREAK AND DEBURR ALL SHARP EDGES

3rd ANGLE PROJECTION

DO NOT SCALE DRAWING

TRANSNUCLEAR WEST

SAFETY ANALYSIS REPORT
NUHOMS® FO-DSC & FC-DSC
FOR PWR FUEL
MAIN ASSEMBLY

FILE NO	DWG NO	SCALE	SHEET	REV NO
NUH005 4004	NUH-05-4004	NONE	4 OF 4	13

REV	DESCRIPTION:	DRAWN:	ORIGINATED:	VERIFIED:	APPROVED:	LICENSING:
11	AMENDMENT APPLICATION No. 4	RGP 3/6/00	3-8-00	3/9/00	3-9-00	3/14/00

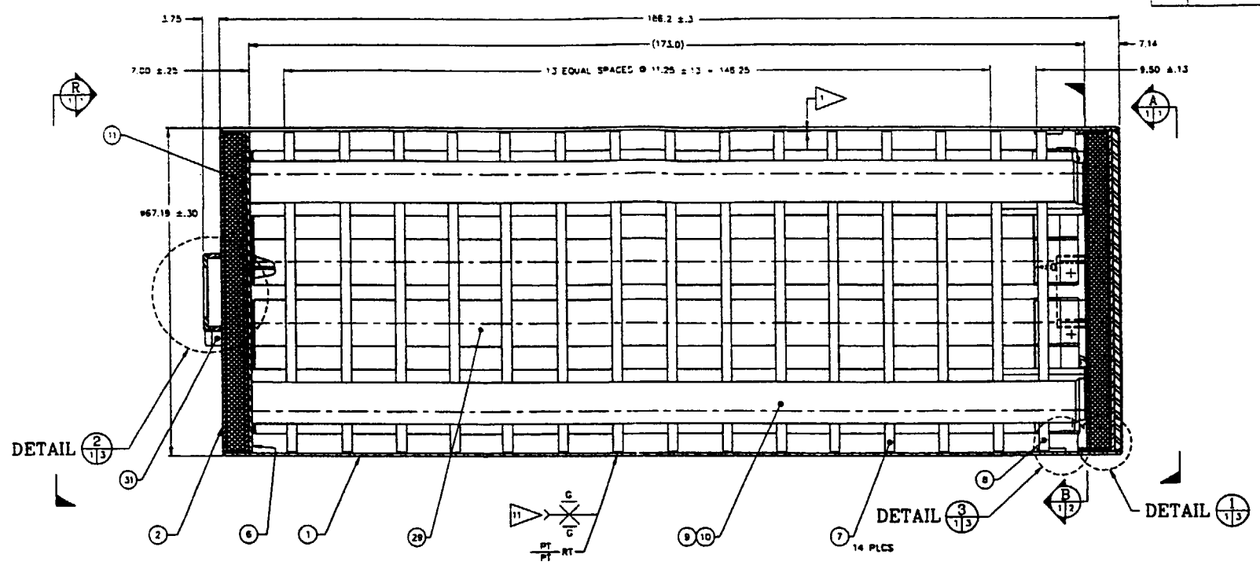

MAIN ASSEMBLY

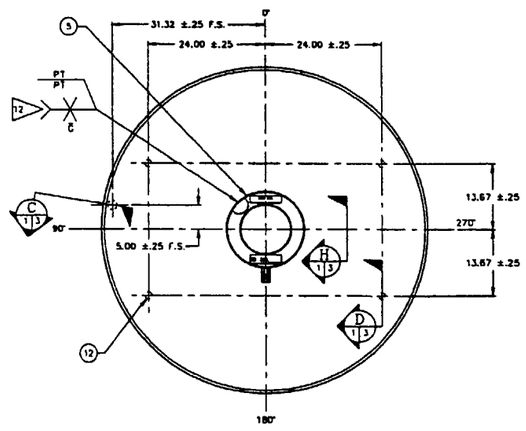

VIEW R/1.1

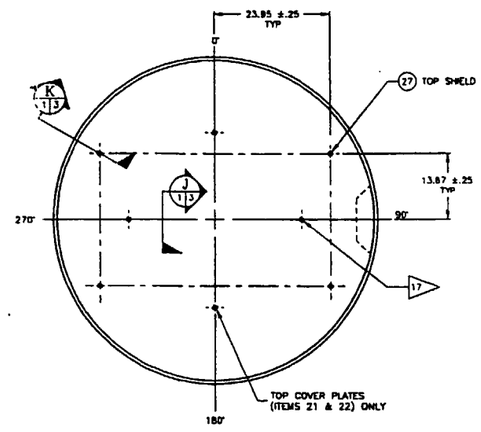

VIEW A/1.1

NOTES:

1. NOMINAL RADIAL GAP BETWEEN SPACER DISCS (ITEMS 7 & 8) AND DSC SHELL (ITEM 1) IS 0.22 INCHES; WITH CONCENTRIC CENTERLINES. FOR MAIN ASSEMBLY AND DSC SHELL MINIMUM GAP IS 0.04 INCHES.
2. SPACE INTERMITTENT WELDS TO AVOID SUPPORT PLATES, ITEMS 9 & 10
3. ALL WELDING SHALL BE PERFORMED IN ACCORDANCE WITH NG-4000 FOR THE BASKET, NB-4000 FOR THE REMAINDER, AND SECTION IX. WELDING PROCEDURES SHALL BE QUALIFIED IN ACCORDANCE WITH NG-4330, OR NB-4330, AND SECTION IX OF THE ASME CODE. WELDS SHOWN TO BE SMOOTH OR FLUSH SHALL HAVE A MAXIMUM REINFORCEMENT OF .03 INCHES AND HAVE A TAPERED TRANSITION TO THE BASE MATERIAL SURFACE.
4. A SINGLE 4" THICK PIECE OF MATERIAL MAY BE SUBSTITUTED IN LIEU OF ITEMS 9 & 10 PROVIDED MATERIAL MEETS REQUIREMENTS OF T_{NDT} OF 0-125°F
5. LONGITUDINAL WELDS MAY BE MADE IN THE FLATS OR OPPOSITE CORNERS OF LINER. WELDS ON THE FLATS SHALL BE GROUND FLUSH ON OUTSIDE AND SHALL NOT PROTRUDE INSIDE LINER BY MORE THAN 0.01.
6. INSPECTION SHALL BE PERFORMED IN ACCORDANCE WITH ASME CODE SECTION III, DIVISION 1, SUBSECTION NB, ARTICLE NB-5000.
7. THE FOUR SPACER BARS ITEM 37 MAY BE REPLACED WITH A SINGLE 2.3 SQ. x .25 PLATE LOCATED AT CENTER OF ITEM 33. PROVIDE 3/16" FILLET WELD OF 1" MINIMUM LENGTH
8. MATERIALS, WELDING AND INSPECTION SHALL MEET STANDARD COMMERCIAL PRACTICES
9. TAPPED HOLES FOR 3/4"ø EYEBOLTS ARE PROVIDED IN TOP SPACER DISC, ITEM 8, FOR LIFTING BASKET ASSEMBLY DURING FABRICATION. REMOVE EYEBOLTS AFTER PLACEMENT OF BASKET IN SHELL ASSEMBLY.
10. BLAST CLEAN ALL EXPOSED CARBON STEEL SURFACES AND COAT WITH ELECTROLESS NICKEL OR EQUIVALENT COATING.
11. FULL PENETRATION LONGITUDINAL AND CIRCUMFERENTIAL BUTT WELDS ARE REQUIRED FOR ITEM 1 WITH 100% RADIOGRAPHIC EXAMINATION PER NB-5000. WELD JOINT DETAIL SHALL BE IN ACCORDANCE WITH ASME CODE. FINISHED INSIDE AND OUTSIDE SURFACE SHALL BE FLUSH WITH SURROUNDING SURFACES. GROUND WELD OR BASE METAL SHALL NOT BE REDUCED TO A THICKNESS BELOW .563". FINISHED THICKNESS OF ALL GROUND OR MACHINED AREAS SHALL BE VERIFIED BY UT.
12. ITEM 5 MAY BE A PIPE SECTION OR ROLLED RING WITH LONGITUDINAL WELD AT LOCATION OF FABRICATORS CHOICE. FULL PENETRATION WELD JOINT IN ACCORDANCE WITH ASME CODE.
13. THREAD SEALANT MAY BE USED FOR INSTALLATION OF THREADED ITEMS.
14. ø1.25 THRU HOLE FOR SIPHON TUBE ITEMS 7 AND 8.
15. OTHER SCREEN CONFIGURATION MAY BE USED IF SCREEN AREA IS MAINTAINED.
16. JOINT SHALL BE PROGRESSIVELY INSPECTED PER REQUIREMENTS OF NB-5245 AT ROOT, EACH 1/4" DEPOSITED FILLER MATERIAL, AND FINAL SURFACE.
17. ITEM 21 & 22 MAY BE DRILLED AND TAPPED TO FACILITATE LIFTING. HOLES SHALL NOT PENETRATE PLATE 4 PLACES 3/4-10UNC-2B, 0.75 DEEP ITEM 22; 0.50 DEEP ITEM 21.
18. (NOT USED).
19. SPACER DISC AND SUPPORT PLATE MATERIAL REQUIRES TESTING PER ASTM E-208 OR E-604 TO CONFIRM T_{NDT} ≤ -95°F
20. ITEM 38 WIDTH IS TO BE EQUAL TO OR GREATER THAN WIDTH OF SLOTS AT TOP OF ITEM 29. ITEM 38 MAY BE FABRICATED AS A COVER FOR THE ENTIRE LINER PERIMETER.
21. STAINLESS STEEL SHIMS, LEAF SPRINGS OR OTHER COMPONENTS MAY BE ATTACHED TO THE SPACER DISKS AND/OR THE FF FUEL CAN LINER (ITEM 29) TO FACILITATE CENTERING DURING INSTALLATION IN THE FF BASKET ASSEMBLY.
22. ATTACH THE FF CAN COVER ASSEMBLY TO THE CAN ASSEMBLY WITH A MINIMUM OF TWO STAINLESS STEEL BOLTS OR PINS. BOLTS/PINS SHALL MEET THE REQUIREMENTS OF ANSI N14.6 FOR LIFTING OF LOADED FF FUEL CAN ASSEMBLY.
23. SECTIONS MAY BE COMBINED AND CUT FROM A LARGER PIECE OF PLATE.
24. A .12 INCH MINIMUM MACHINED RADIUS TRANSITION BETWEEN ITEMS 2 AND 5 IS AN ALTERNATIVE TO THE 1/8 INCH COVER FILLETS. MACHINED RADIUS MAY BE ONE OR BOTH SIDES. PT OF MACHINED RADIUS IS REQUIRED.
25. ALL WELDS OF SHELL SHALL BE MINIMUM OF 2 LAYERS.
26. INTERNAL STIFFENERS AND CONNECTIONS SHALL NOT REDUCE AVERAGE LEAD THICKNESS BELOW 3.50 INCHES.
27. INTERNAL STIFFENERS AND CONNECTIONS SHALL NOT REDUCE AVERAGE LEAD THICKNESS BELOW 4.00 INCHES.
28. MAXIMUM RADIAL GAP BETWEEN ITEM 41 AND ITEM 1 IN SECTION (C) IS .12".
29. ALTERNATIVE WELD JOINT PREPARATIONS (U, V, OR J GROOVES) MAY BE USED PROVIDED ALL ASME CODE CRITERIA ARE MET. THE SPECIFIED MINIMUM EFFECTIVE THROAT MUST BE MAINTAINED.
30. DIMENSIONS NOT SPECIFICALLY TOLERANCED ARE FOR INFORMATION ONLY. BLOCK TOLERANCES DO NOT APPLY.

ITEM NO.	QTY REQ'D	PART OR IDENTIFYING NO.	NOMENCLATURE OR DESCRIPTION	MATERIAL SPECIFICATION
44	A/R		PLATE, STIFFENING	ASTM A36
43	1		PLATE	ASME SA-240, TYPE 304
42	A/R		PLATE, STIFFENING	ASME SA-240, TYPE 304
41	1		BOTTOM PLUG SIDE CASING	ASME SA-240, TYPE 304
40	1		BOTTOM PLUG TOP CASING	ASME SA-240, TYPE 304
39	52		SIDE LID PLATE	ASME SA-240, TYPE 304
38	52		COVER PLATE, 11 GA (.12) THK	ASTM A240, TYPE 304
37	52		SPACER BAR	ASTM A240, TYPE 304
36	52		WASHER PLATE	ASTM A240, TYPE 304
35	52		6 X 6 MESH .047 WIRE DIA. 2.50 DIA.	SS TYPE 304
34	13		TOP LID LIFTING PINTLE	ASME SA-240, TYPE 304
33	13		BOTTOM LID ADAPTER PLATE	ASME SA-240, TYPE 304
32	13		TOP LID COVER PLATE	ASME SA-240, TYPE 304
31	1		SHEAR KEY	ASTM A240, TYPE 304
30	52		FLANGE PLATE	ASME SA-240, TYPE 304
29	13		LINER, 1/4" THK	ASME SA-240, TYPE 304
28			(NOT USED)	
27	4		TOP PLUG LIFTING LUG	ASTM A36
26	1		TOP PLUG SIDE CASING	ASTM A38
25	1		TOP PLUG TOP CASING	ASTM A38
24	1		TOP PLUG BOTTOM CASING	ASTM A36
23	2		VENT & SIPHON PORT COVER PLATE	ASME SA-240, TYPE 304
22	1		OUTER TOP COVER PLATE, 1 1/4" THK	ASME SA-240, TYPE 304
21	1		INNER TOP COVER PLATE, 3/4" THK	ASME SA-240, TYPE 304
20	1		SUPPORT RING	ASME SA-240, TYPE 304
19	4		LIFTING LUG	ASTM A240, TYPE 304
18	2		QUICK CONNECT, 1/2" MALE	STAINLESS STEEL
17	1		MALE CONNECTOR 3/4" TUBE X 3/4" MNPT	STAINLESS STEEL
16	1		SIPHON TUBING, 3/4"O.D. X .05 WALL	AISI 304
15	1		SIPHON & VENT BLOCK	ASME SA-240, TYPE 304
14			(NOT USED)	
13			(NOT USED)	
12	4		BOTTOM PLUG POST	ASME SA-479, TYPE 304
11	A/R		LEAD SHIELDING	ASTM B29 LEAD
10	4		OUTER SUPPORT PLATE	ASME SA-537, CL 2 OR SA-543, TYPE B, CL 1 (CODE CASE N-7)
9	4		INNER SUPPORT PLATE	ASME SA-537, CL 2 OR SA-543, TYPE B, CL 1 (CODE CASE N-7)
8	1		TOP SPACER DISC, 2.0 THK	ASME SA-537, CL 2 OR SA-543, TYPE B, CL 1 (CODE CASE N-7)
7	14		SPACER DISC, 2.0 THK	ASME SA-537, CL 2 OR SA-543, TYPE B, CL 1 (CODE CASE N-7)
6	1		INNER BOTTOM COVER	ASME SA-240, TYPE 304
5	1		GRAPPLE RING SUPPORT	ASME SA-240, TYPE 304
4	1		GRAPPLE RING	ASME SA-240, TYPE 304
3	2		KEY	ASTM A240, TYPE 304
2	1		OUTER BOTTOM COVER	ASME SA-240, TYPE 304
1	1		CYLINDRICAL SHELL	ASME SA-240, TYPE 304

PARTS LIST

TRANSNUCLEAR WEST
CONTROLLED COPY NO. 2

U.S. Patent No. 4,780,269 & 5,550,882
Proprietary Property of
Transnuclear, Inc.
This drawing may not be disclosed to others in whole or in part, or used for other than the transmitted purpose without written permission of Transnuclear, Inc

DIMENSIONS ARE APPLICABLE AT 68°F AND ALL TOLERANCING APPLIES AFTER WELDING AND FINAL MACHINING UNLESS NOTED OTHERWISE.

DIMENSIONS ARE IN INCHES AND DEGREES UNLESS NOTED OTHERWISE. DIMENSIONING AND TOLERANCING IN ACCORDANCE WITH ANSI Y14.5M-1982, UNLESS NOTED OTHERWISE. TOLERANCES SHALL BE AS FOLLOWS:
DIMENSIONS LESS THAN 6.00: ±.06
6.00 TO 48.00: ±.13
GREATER THAN 48.00: ±.25
ANGLES: ±1°

BREAK AND DEBURR ALL SHARP EDGES

3rd ANGLE PROJECTION

DO NOT SCALE DRAWING

TRANSNUCLEAR WEST

TITLE: SAFETY ANALYSIS REPORT
NUHOMS® FF-DSC
FOR PWR FUEL
MAIN ASSEMBLY

FILE NO.	DWG NO.	SCALE	SHEET	REV NO.
NUH005.4005	NUH-05-4005	NONE	1 OF 4	11

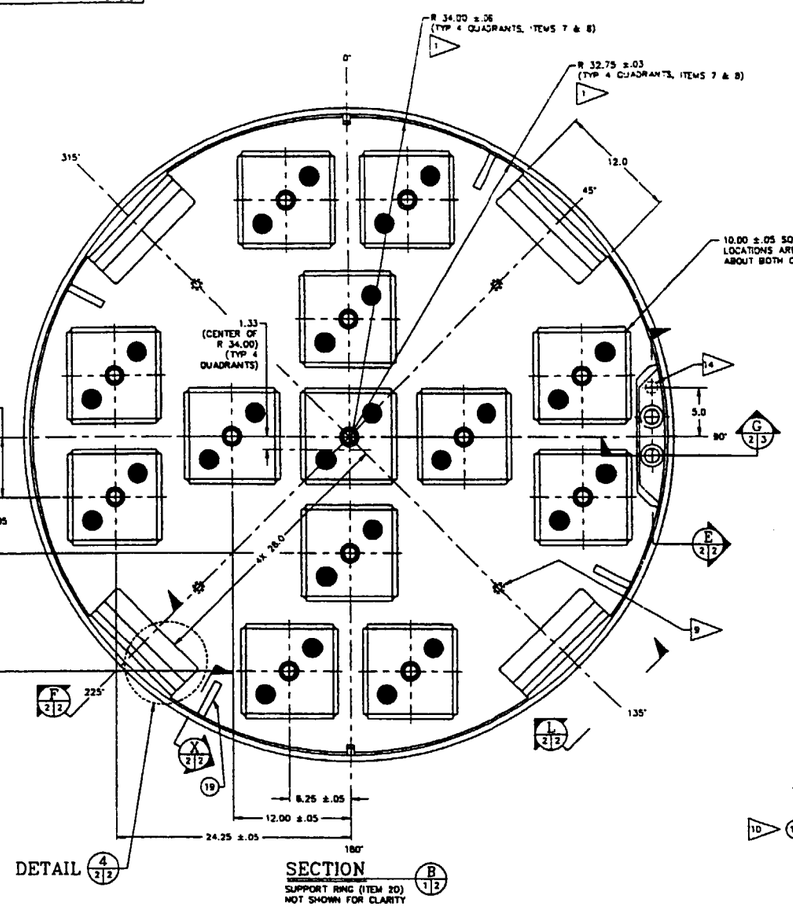

DETAIL 4 2|2

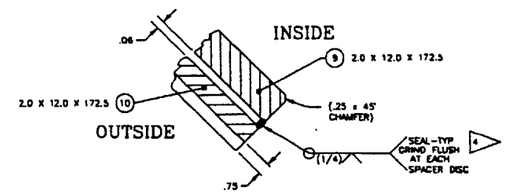

DETAIL 4 2|2
(SECTION THRU SUPPORT PLATES)

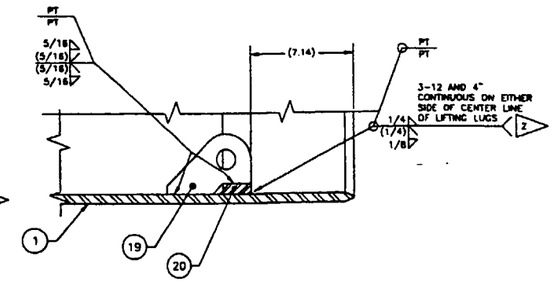

SECTION X 2|2
(ROTATED 28° C.C.W.)
(LIFTING LUG, TYP AT AZIMUTHS 28°, 118°, 208° AND 298°)

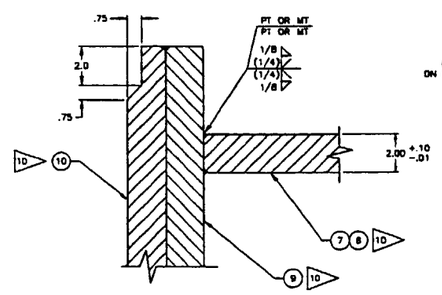

SECTION F 2|2

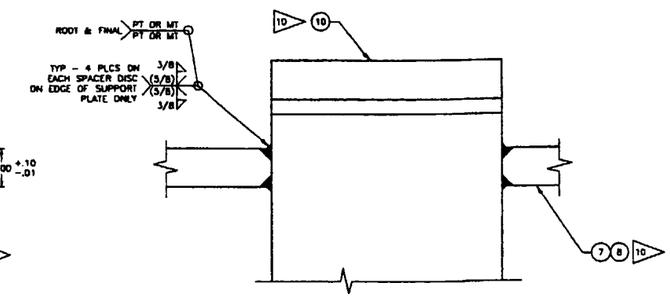

VIEW L 2|2

SECTION B 1|2
SUPPORT RING (ITEM 20) NOT SHOWN FOR CLARITY

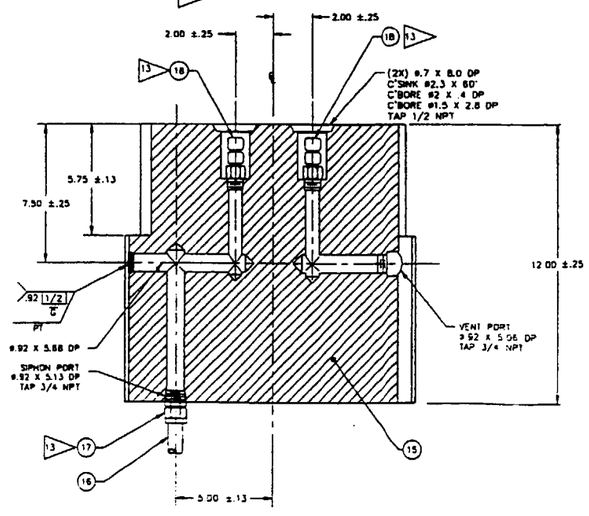

SECTION E 2|2

TRANSNUCLEAR WEST
CONTROLLED COPY NO. 2

U.S. Patent No. 4,780,269 & 5,550,882
Proprietary Property of Transnuclear, Inc.
This drawing may not be disclosed to others in whole or in part, or used for other than the transmitted purpose without written permission of Transnuclear, Inc.

ALL DIMENSIONS ARE APPLICABLE AT REF AND ALL TOLERANCING APPLIES AFTER WELDING AND FINAL MACHINING UNLESS NOTED OTHERWISE

DIMENSIONS ARE IN INCHES AND DEGREES UNLESS NOTED OTHERWISE
DIMENSIONING AND TOLERANCING IN ACCORDANCE WITH ANSI Y14.5M-1982 UNLESS NOTED OTHERWISE.
TOLERANCES SHALL BE AS FOLLOWS
DIMENSIONS LESS THAN 6.00 ± .06
6.00 TO 48.00 ± .13
GREATER THAN 48.00 ± .25
ANGLES ±

BREAK AND DEBURR ALL SHARP EDGES

3rd ANGLE PROJECTION

DO NOT SCALE DRAWING

TRANSNUCLEAR WEST

TITLE: SAFETY ANALYSIS REPORT
NUHOMS® FF-DSC
FOR PWR FUEL
MAIN ASSEMBLY

FILE NO	DWG NO	SCALE	SHEET	REV NO
NUH005.4005	NUH-05-4005	NONE	2 OF 4	1

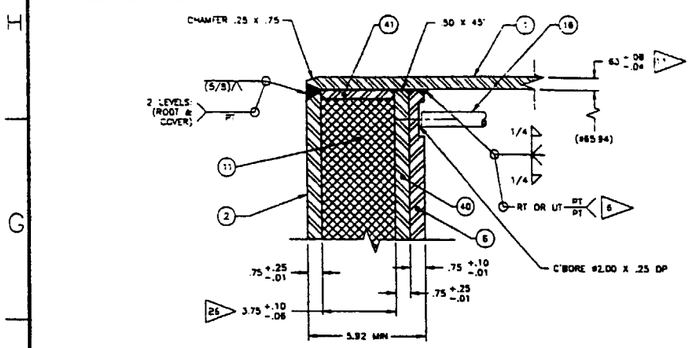

SECTION C 1/3 28

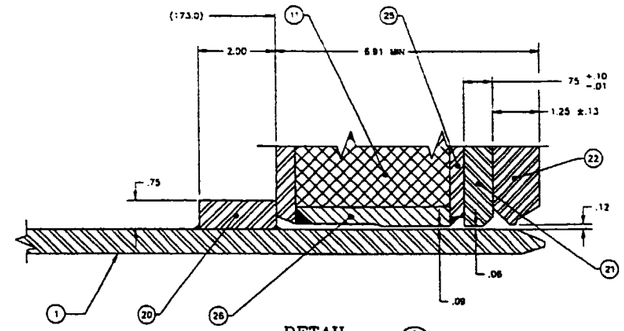

DETAIL 1 1/3
(TOP END FIT-UP)

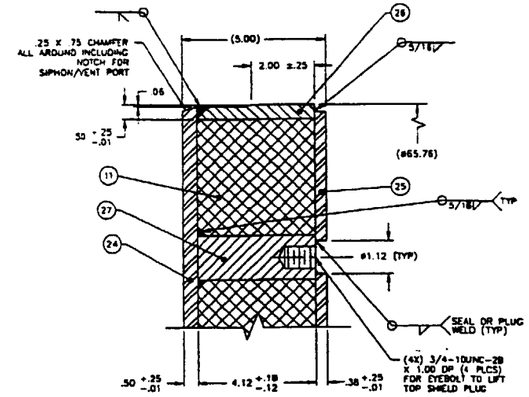

SECTION K 1/3 27
(ROTATED 60° C.W.)

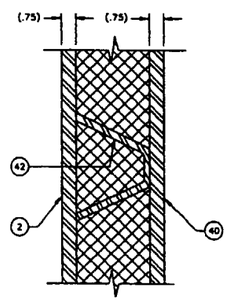

SECTION H 1/3 26

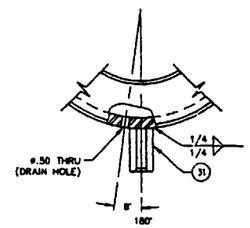

VIEW T-T

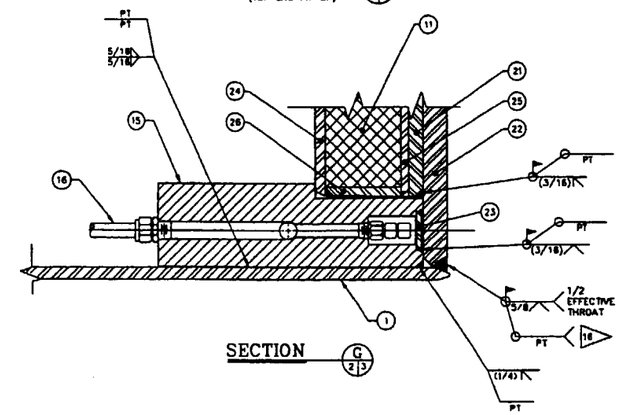

SECTION G 2 3

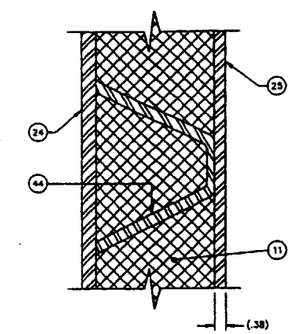

SECTION J 1/3 27

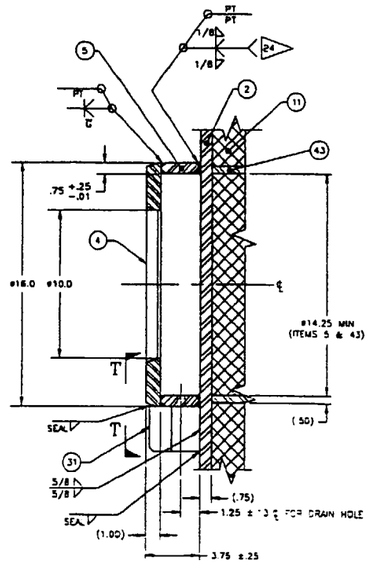

DETAIL 2 1/3 26

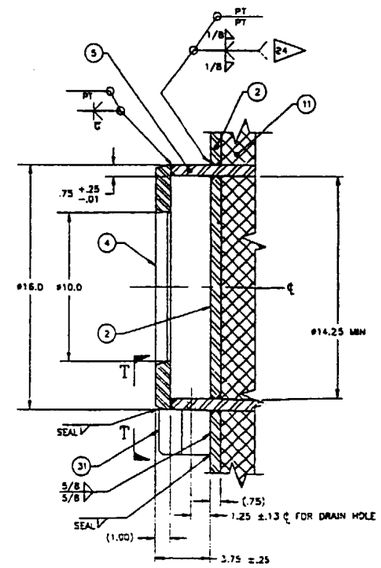

DETAIL 2 1/3 26
(ALTERNATE)

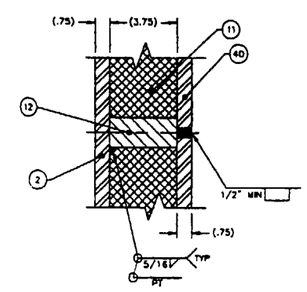

SECTION D 1/3
(ITEM 6 NOT SHOWN FOR CLARITY)
(TYP 4 PLCS)

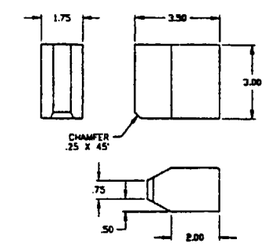

ITEM 31
ALL DIMENSIONS ARE ±.13

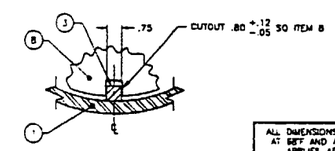

SECTION P 1/3
ITEM 8 ONLY
0° & 180° AZIMUTH
ITEM 3 SHOWN SECTIONED AT TOP SPACER DISC FOR CLARITY)

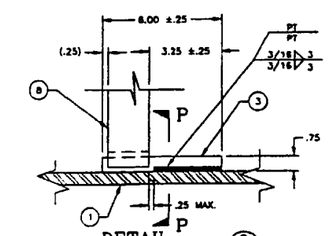

DETAIL 3 1/3
KEY, TYP AT AZIMUTHS 0° AND 180°

TRANSNUCLEAR WEST
CONTROLLED COPY NO. 2

U.S. Patent No. 4,780,269 & 5,550,882
Proprietary Property of
Transnuclear, Inc.
This drawing may not be disclosed to others in whole or in part, or used for other than the transmitted purpose without written permission of Transnuclear, Inc.

ALL DIMENSIONS ARE APPLICABLE AT REF AND ALL TOLERANCING APPLIES AFTER WELDING AND FINAL MACHINING UNLESS NOTED OTHERWISE

DIMENSIONS ARE IN INCHES AND DEGREES UNLESS NOTED OTHERWISE. DIMENSIONING AND TOLERANCING IN ACCORDANCE WITH ANSI Y14.5M-1982 UNLESS NOTED OTHERWISE. TOLERANCES SHALL BE AS FOLLOWS:
DIMENSIONS LESS THAN 6.00 ± .06
6.00 TO 48.00 ± .13
GREATER THAN 48.00 ± .25
ANGLES ± 1°

BREAK AND DEBURR ALL SHARP EDGES

3rd ANGLE PROJECTION

DO NOT SCALE DRAWING

TRANSNUCLEAR WEST

SAFETY ANALYSIS REPORT
NUHOMS® FF-DSC
FOR PWR FUEL
MAIN ASSEMBLY

FILE NO.	DWG. NO.	SCALE	SHEET	REV. NO.
NUH005.4005	NUH-05-4005	NONE	3 OF 4	11

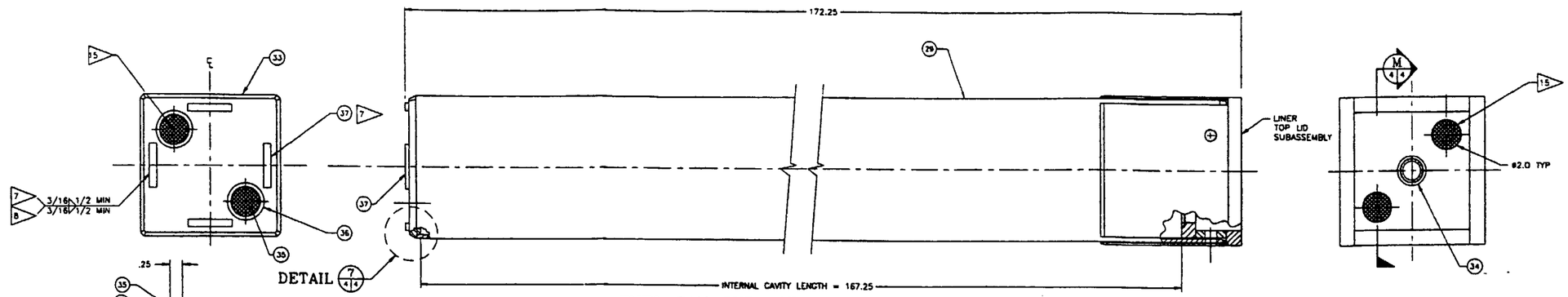

FUEL CAN SUBASSEMBLY - ELEVATION VIEW

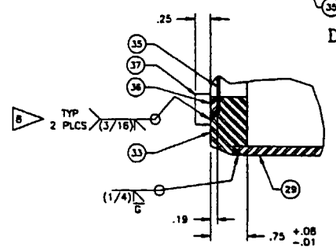

DETAIL 7/4|4

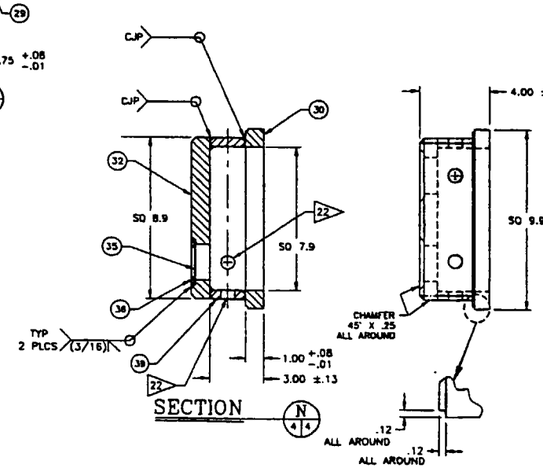

SECTION N/4|4

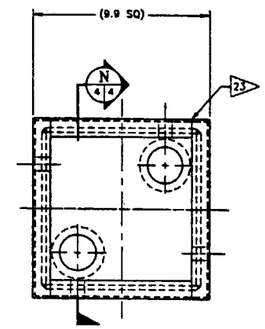

LINER TOP LID SUBASSEMBLY 23

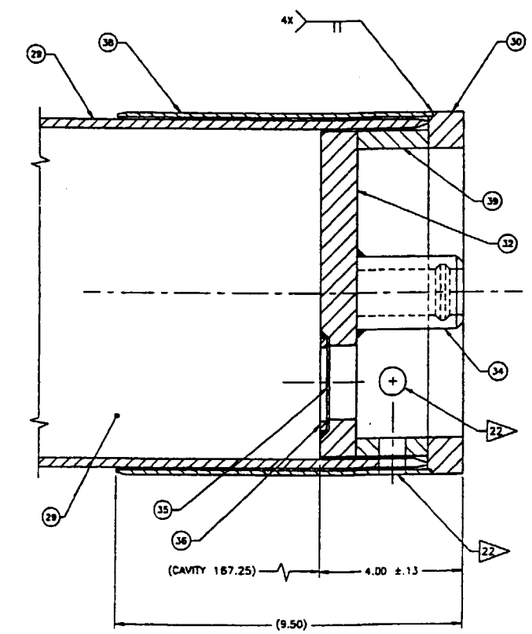

SECTION M/4|4

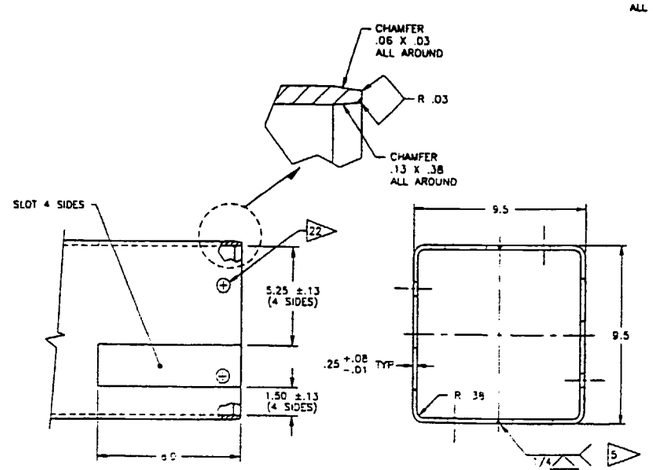

ITEM 29

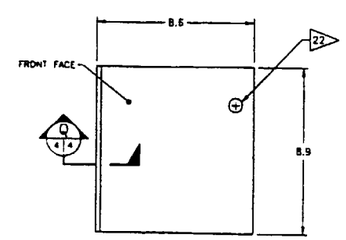

ITEM 38

4 REQ'D EACH SUBASSEMBLY

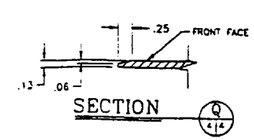

SECTION Q/4|4

TRANSNUCLEAR WEST CONTROLLED COPY NO. 2

U.S. Patent No. 4,780,269 & 5,550,882

Proprietary Property of Transnuclear, Inc.
This drawing may not be disclosed to others in whole or in part, or used for other than the transmitted purpose without written permission of Transnuclear, Inc

ALL DIMENSIONS ARE APPLICABLE AT REF AND ALL TOLERANCING APPLIES AFTER WELDING AND FINAL MACHINING UNLESS NOTED OTHERWISE.

DIMENSIONS ARE IN INCHES AND DEGREES UNLESS NOTED OTHERWISE. DIMENSIONING AND TOLERANCING IN ACCORDANCE WITH ANSI Y14.5M-1982. UNLESS NOTED OTHERWISE. TOLERANCES SHALL BE AS FOLLOWS:
DIMENSIONS LESS THAN 6.00: ± .06
6.00 TO 48.00: ± .13
GREATER THAN 48.00: ± .25
ANGLES: ± 1°

BREAK AND DEBURR ALL SHARP EDGES

3rd ANGLE PROJECTION

DO NOT SCALE DRAWING

TRANSNUCLEAR WEST

TITLE: SAFETY ANALYSIS REPORT NUHOMS® FF-DSC FOR PWR FUEL MAIN ASSEMBLY

FILE NO.	DWG NO	SCALE	SHEET	REV NO
NUH005.4005	NUH-05-4005	NONE	4 OF 4	11