Nuclear Engineering and Design 84 (1985) 383–409
North-Holland, Amsterdam

SEISMIC ISOLATION FOR NUCLEAR POWER PLANTS: TECHNICAL AND NON-TECHNICAL ASPECTS IN DECISION MAKING

J.M. EIDINGER

Impell Corporation, 350 Lennon Lane, Walnut Creek, CA 94598, USA

and

J.M. KELLY

U.C. Berkeley, Berkeley, CA 94720, USA

Received 25 April 1984

Technical aspects of seismic isolation systems show merit for their use in nuclear power plants. Less quantifiable non-technical aspects must be evaluated in the decision to employ a seismic isolation system.

First, non-technical aspects are discussed. An historical and applications perspective is given, and it is suggested that the number of applications of seismic isolation systems is correlated with the amount of research activity in this area. For nuclear plants, it is suggested that application of seismic isolation systems is in part related to standardized plant designs in high seismic regions. Also, for nuclear plants, it is suggested that direct capital cost, enhanced seismic safety, regulatory licensing and unknown locations of nearby active faults are all factors which can weigh in favor and/or not in favor for seismic isolation application.

Second, technical aspects are discussed. The technical results show that seismic isolation reduces building response, and reduces floor response spectra/equipment response. These results combine in application to reduce seismic risk and thus enhance safety for nuclear plants.

1. Introduction

Seismic isolation of nuclear power plants is an excellent concept. The world engineering community has shown increased interest in the concept and in fact, seismic isolation has already been applied for a variety of structures in several countries. In the US nuclear industry, however, there is apparent total non-use of this engineering concept.

For the reader who is only peripherally acquainted with seismic base isolation, this report should serve to answer the question: "I know what the concept is, but why use it?" For the reader who is knowledgeable in this area, this report should serve to review where the industry is today, and provoke further thought into a detailed examination of the total cost/benefits in the decision to use seismic isolation for nuclear power plants.

This report will discuss why we should, or should not, be reconsidering the state of the seismic isolation engineering in the US nuclear industry. In section 2, we will look at the history of seismic isolation. In section 3, we will discuss the Standardized Nuclear Power Plant design concept, examine application of base isolation systems in foreign countries, delve into US seismic regulatory and licensing issues, and then present discussion as to how and why the US nuclear industry may employ seismic isolation designs in the future.

In section 4, we present a summary of the technical reasons why seismic isolation systems are being used. We will key on the topics of reduced building loads, reduced floor response spectra, and enhanced seismic risk safety. The data presented are based on both test and analytical results.

In conclusion, we suggest that the design of US nuclear power plants on seismic base isolation foundations proposes several benefits. These benefits must ultimately be considered not only on their technical basis, but in how they combine into the less technical

0029-5493/85/$03.30 © Elsevier Science Publishers B.V.
(North-Holland Physics Publishing Division)

aspects, such as safety, licensing, capital cost, and risk, into the decision to employ a seismic isolation system in a nuclear power plant.

2. History

The concept of seismic isolation of structures is not new. In a historical perspective report [1], Kelly suggests that the first literature on the topic dates back to 1909, when Dr Calantarients applied for patent rights for a method to resist the actions of earthquakes. Not to be outdone, Skinner [2] suggests that the temple columns of the Parthenon in Athens have incorporated in them some lead keys; these keys are designed to provide sliding resistance during earthquake loadings. The columns have thus survived seismic shocks for some 2500 y.

Detailed descriptions of more modern-day seismic isolation systems been been adequately documented [1–5]. Such systems employ various devices, ranging from rubber bearings, friction plates, mechanical fuses, rollers, springs and a host of specialty energy absorbers. To examine in detail these isolation systems, the reader is directed to the following references: types of foundation isolation systems, [3]; rubber bearing uses in isolation systems, [4]; energy absorber uses in isolation and associated seismic load reduction systems, [5]. These references also contain excellent bibliographies.

One way to gauge the status of the development and application of seismic isolation systems is to review the technical literature. By so doing, we gain a valuable historical perspective.

Table 1 is a numerical compilation of references on the topics of seismic isolation systems, and energy absorbing devices. The table is based on the following data: reports on applications for soft story buildings; seismic base isolation; use of energy absorbing devices during seismic motions, in particular for nuclear plant application. Most references were written by authors in the United States, United Kingdom and New Zealand. Some additional references were written by authors in France, Greece, and Japan. Table 1 is not meant to be numerically accurate. In all, the table presents underestimated figures roughly by a factor of 2.

Table 2 is a compilation of applied uses of seismic base isolation systems and energy absorption systems. The data for this table are found in several references, in particular [1,2]. The table shows that almost all seismic isolation applications are in non-US countries. The reason for the lack of seismic isolation application in US nuclear plant design is discussed in section 3.4.

Table 3 lists research centers worldwide where this author has firm knowledge of test programs having been performed on base isolation and energy absorption systems. The list omits test work done in France, Japan and elsewhere.

Table 1
Published references on base isolation and energy absorbing systems

Year	Total references	Main topic(s)			
		Seismic isolation	Energy absorbers	Test results	Analytical results
1909–1929	2	2			2
1929–1959	2	2	1		2
1960–1968	3	2			2
1969	2	2	1		2
1970	3	3			3
1971	0				
1972	2	2		1	1
1973	4	1	3		1
1974	4	4			4
1975	7	5		1	6
1976	5	2	3	1	1
1977	13	8	5	7	6
1978	11	5	5	3	5
1979	8	7	5	4	4
1980	12	3	9	5	4
1981	8	7	1	3	4
TOTAL	86	55	33	25	47

Table 2
Applications world wide of seismic isolation systems

Application	Isolation function	Components	Country	Date of application
Rangitikei – Railway Bridge	seismic energy absorption	energy absorbers rubber bearings	New Zealand	1976
School	seismic isolation	rubber bearings mechanical fuses	Yugoslavia	1969
High rise office building	seismic isolation	rubber bearings mechanical fuses	Greece	1972
Nuclear stations, Koeberg	seismic isolation	rubber bearings friction plates	South Africa	1975
Nuclear stations, Torness, Heysham	rigid seismic action	rubber bearings	United Kingdom	1981
Nuclear stations, Cruas	seismic isolation	rubber bearings	France	1980
Office building 4 story	seismic isolation	rubber bearings lead plugs	New Zealand	1980
Schools	seismic isolation	rubber bearings	France	1977–80
Chimney	seismic energy absorption	energy absorbers	New Zealand	1980
Railway bridge Decks	seismic energy absorption	rubber bearings energy absorbers	New Zealand	1970s
Office building	seismic isolation	rubber bearings	California	1983

We can conclude the following from tables 1, 2 and 3:

(1) Prior to widespread computer availability (circa 1969), the seismic isolation concept was recognized but rarely discussed.

(2) There has been a several hundred per cent increase in research on seismic isolation topics since 1975.

(3) Significant test efforts have begun since 1976, worldwide.

Table 3
Test programs

Organization	Topics	Date
U.C. Berkeley (US)	1. Seismic building tests 2. Energy absorber development 3. Nuclear Piping Applications	1976–present
Stanford (US)	1. Seismic building tests	1976–1977
Malaysia Rubber Producers Research Association (UK)	1. Rubber bearing technology	1976–present
New Zealand	1. Energy absorber development 2. Rubber bearing development	1976–present
MIT (US)	1. Energy absorber development	1979–1981
EPRI (US)	1. Scaled nuclear containment seismic tests	1979–1980

3. Non-technical aspects of seismic isolation applications for nuclear power plants

In the previous section, we saw that significant effort has been made during the 1970s in experimental and analytical studies of seismic base isolation systems. Rarely, though, has it been that authors have discussed practical studies of how to design buildings on such systems. These "practical" studies are in nature less technical than model tests and computer studies.

In section 3 of this report, we will examine the non-technical, but equally important practical issues surrounding seismic base isolation application to nuclear power plants.

Nuclear power plants in several countries have already been designed with some forms of seismic base isolation systems. To date, none have been so designed in the US. In contrast, while all major current base isolation applications are in other countries, possibly one half of all world research on this topic has been done by US researchers.

This lack of US application of base isolation systems is striking. This is especially true when the almost unanimous conclusion of some 86 referenced works is that base isolation coupled with energy absorption is a positive aseismic design concept. As a partial answer to this finding, let us review the current 1984 status of worldwide use of seismic isolation systems for nuclear power plants. In France and South Africa, engineers have chosen to use seismic base isolation foundation systems. Although not seismically isolated, nuclear plants in the United Kingdom are built on rubber bearings, key components in isolation systems. Until Iran cancelled their plans to build nuclear power plants they had contemplated using a seismic isolation foundation system. We can also speculate that the Japanese are well ahead in such design topics. In the United States, no nuclear plants employ any foundation system other than standard design. This includes both the 80 + operating plants and about 50 plants either planned or now under construction. Why is this the case?

To answer this question, we can read the literature. Unfortunately, we find scanty or even faulty discussions as to practical application of seismic isolation foundation systems for either nuclear or non-nuclear applications. For nuclear applications, perhaps the best published descriptions of how base isolation and energy absorption systems increase plant safety are found in ref. [6]. This reference, though, concentrates on nuclear piping applications, and not on entire plant isolation applications.

Before finding the answer to this question to the current US position, let us turn to the Standardized Nuclear Power Plant (SNUPPs) design concept. Then, we will examine in more detail the French approach to seismic isolation. We will mention how rubber bearings are used in a non-seismic isolation application in the United Kingdom nuclear program. Finally, we will return to the US situation and resolve the question.

3.1. Standardized nuclear power plant concept

The first nuclear plants designed on a base isolation system are the Koeberg, South Africa twin 900 MW (MW_e) units. These plants were designed by Framatome, the French reactor vendor, as Standardized Nuclear Power Plants (SNUPPs). One reason the South African plants are seismically isolated is for earthquake safety; the second, and perhaps more important reason, is the French SNUPPs program.

The history of the French nuclear program is quite different from that of the US. The first eight French reactors were Gas Cooled Reactors (GCRs), coming on line between 1959 and 1972. As the nuclear industry matured in France in the early 1970s, the government took active participation in orienting the private nuclear industry with public goals. A decision was made to build future reactors (except for Fast Breeders) as Pressurized Water Reactors (PWRs), thus forgoing the GCR, as well as Boiling Water Reactor (BWR) designs. The outcome of this public and private joint planning led to a standardized SNUPPs 900 MW_e PWR design.

This 900 MW_e PWR design was finalized by the mid 1970s. Since then, a total of thirty-four 900 MW_e PWR plants have been ordered in France. The benefits of this French plan are now becoming apparent: up to 1979, six of these 900 MW_e PWR plants were operational; in 1980, five more such units came on-line; in 1981, ten more units have either come on-line or are essentially complete.

Since the mid 1970s, the French have developed a new 1300 MW_e PWR SNUPPs plant. To date there have been fourteen of these plants ordered.

What does Standard Nuclear Power Plant design entail? Standardization essentially means that one set of blue prints can be used for any number of individual plants. To be sure, no two "standardized" units are absolutely identical: different vendors of equipment may provide competing equipment at different prices, etc.

However, what can be made identical are the civil-structural designs, specifications for mechanical and electrical equipment, layout of piping systems, site layout, construction scheduling, etc. Economies of scale are important: in terms of engineering fees, a French

900 MW_e plant costs only about 40%–60% of the average for a new, non-standard American 900 MW_e plant.

3.2. France

The French are responsible for building, on seismic isolation systems, a four unit nuclear power plant in France. (Cruas, 4×900 MW_e PWRs) and a two unit plant in South Africa, (Koeberg, 2×900 MW_e PWRs). Both Cruas and Koeberg are scheduled to be in commercial operation by early 1985. We will now discuss the seismic criteria for these plants.

In France, specific seismic design criteria have been in force for some time. As an approximation, most of France is in a relatively low level seismic zone. Hence, the equivalent design basis Safe Shutdown Earthquake (SSE) motion is about equal to a US NRC Reg. Guide 1.60 motion [7], scaled to 0.20 *g* acceleration at 33 Hz. Consider then the case when Framatome is awarded a contract to supply a 900 MW_e plant, either in France, or elsewhere in the world, but whose site specific SSE seismic motion is set to a 0.30 *g* Reg Guide 1.60 motion. Three obvious alternatives exist:

(1) Change site location to a lower seismic activity site, so that design can be held to 0.20 *g*. For any number of political, licensing, or geographical reasons, this may not be possible.
(2) Modify plant design to accept a 0.30 *g* motion. As a first order approximation, this could add more than $50 million to the plant's cost. Major efforts required would be:
   - additional reinforcing in concrete
   - requalification of primary loop components to a higher *g* level
   - reanalysis of all piping systems, with modified numbers, types and locations of supports
   - potential rerouting of piping systems
   - requalification of all safey-related mechanical and electrical components, by analysis and/or test (consider that test programs can easily cost $100 000 per component, not to mention significant delays in procurement delivery schedules)
(3) Base isolate the entire nuclear plant so that input motions are reduced below the 0.20 *g* spectra.

For the French, option (3) has been the feasible choice. To choose option (3), though, the French have had to overcome both technical as well as licensing hurdles.

The technical hurdles of designing a fail-safe seismic base isolation system for French nuclear power plant usage are not severe. The rubber bearings and associated friction sliding plates used in the French base isolation system have been analyzed and shown to achieve excellent results, as discussed in ref. [8]. Rubber bearings can easily surpass environmental constraints, such as fire [9].

The licensing hurdles of having the special isolation engineering design approved by the Commissariat a l'Energie Atomique (CEA, the French equivalent to the NRC) have been dealt with. For both the Cruas (France) and Koeberg (South Africa) plants, the licensing issues were properly resolved, as apparent by the ongoing construction of these plants. (The reader is alerted that typical practice in a nuclear plant export relationship is that the importing country requires similar design and licensing rules as commonly practiced in the exporting country.)

The seismic isolation system was adopted for Koeberg due to special siting aspects. The Koeberg plant is located between two fault zones. It has had to be designed to withstand earthquakes up to Richter magnitude seven, which for the site represents a tremor with a 1 000 000 yr return period. Some key construction details of the system are as follows:

(1) About 1 000 000 cubic meters of sand was evacuated to reach bedrock.
(2) A solid 6 m thick soil–cement foundation was built atop the bedrock.
(3) A 2 m thick concrete raft was poured atop the soil–cement foundation.
(4) From the concrete raft, some 1800 concrete pedestals were erected, each one being topped by a neoprene (artifical rubber) bearing pad. The pads are laminated with steel, to achieve high vertical direction stiffness, while maintaining low horizontal direction stiffness.
(5) Another concrete raft, 5.5 m thick, rests atop the pedestals on bronze/lead support plates. This raft serves as the base for the containment and control buildings.

In the event of small earthquakes, the neoprene bearings act as isolators, by allowing a very low first mode frequency for the supported buildings. Should a major earthquake occur, the upper raft will slide on the metal plates between it and the neoprene bearings. The design allows for the superstructure to shift up to 0.5 m.

Although this foundation construction accounted for about 10 per cent of the overall R2000 million (US $2000 million) cost of the station, it has been compensated for to a certain extent by the use of less elaborate earthquake protection within the containments than would otherwise have been needed.

3.3. United Kingdom

Mounting buildings on base isolation systems is not a new concept in the United Kingdom. Many buildings have been so designed, since 1956, with the intent to reduce acoustic rumbling from underground railways, etc. [10].

Up to about 1980, seismic design of buildings, as well as nuclear power plants, has not been a major issue in the UK. Practically all of the UK is classified as seismically inactive. The UK nuclear industry has accordingly followed standard practice, and have not designed their older reactors for any seismic loads.

This philosophy has changed in recent years. As a licensing issue, seismic is hard to accurately define. Who is to say what "inactive" means? And sure enough, small tremblors near nuclear plants have occurred in the UK since 1979. Accordingly, for new plant design, the UK does include seismic as a load case. This affects their most recently ordered plants, the Heysham B and Torness A Advanced Gas Cooled Reactors (AGRs) now under construction.

The nature of AGR design calls for a large prestressed concrete reactor vessel (PCRV) inside a larger reactor building. Under heat up and cool down during operations and startup, and under prestressing activities, some horizontal motion is required for the PCRV. The PCRV is thus mounted on rubber bearings, vertically stiff and horizontally soft, to allow for this motion. Under seismic conditions, however, motion of the PCRV is restricted by small gaps between the PCRV and the reactor building walls. (The gap is filled with a compound having "zero" stiffness under slowly applied thermal growth, and "very stiff-rigid" stiffness under suddenly applied rapid seismic motion.)

Thus, the United Kingdom design is *not* a seismic isolation design, but more akin to a snubber design. But of interest here is that the bearings, a key part of any seismic isolation system, have been designed as to meet all nuclear safety standards in the United Kingdom. This safety "licensing" issue is most important and must be considered in any nuclear seismic isolation design concept. Thus, the fact that the UK program has accepted rubber bearings as a safety qualified component for nuclear plants is one hurdle passed in designing a full seismic isolation system.

3.4. United States

No American nuclear plant previously built, or now under construction, is designed using a seismic base isolation system. The author suggests three reasons why this is so. First is the diversity in the US nuclear engineering community which has downplayed the use of SNUPPs plants. Second is the traditional seismic design philosphy used by US engineering companies. Third is the very difficult licensing hurdles brought forth by the US Nuclear Regulatory Commission.

(1) The SNUPPs design concept is basically missing in the US nuclear industry. The reasons for this are complex, but are basically due to the greatly decentralized and diversified aspects of the US nuclear engineering community. To expand on this idea, let us consider the following:

In the US, three groups jointly build a nuclear power plant. These groups are: the Utility (owner and operator), the Nuclear Steam Supply System (NSSS) vendor, and the Architect–Engineer (A/E).

At last count, there are 103 Utilities participating in the US nuclear industry. In California, for example, three Utilities operate (or will soon operate) nuclear plants: Pacific Gas and Electric (PG and E) – Diablo Canyon, Southern California Edison (SCE) – San Onofre, and Sacramento Municipal Utility District (SMUD) – Rancho Seco. In addition, San Diego Gas and Electric is a part owner of San Onofre. Of importance here is that PG&E built Diablo Canyon largely with their own engineering staff; SCE and SMUD have built their plants, San Onofre and Rancho Seco, largely using the engineering staff of a major A/E (Bechtel).

Currently, there are 4 major NSSS vendors in the US. They are Westinghouse (PWRs), General Electric (BWRs), Combustion Engineering (PWRs), and Babcock and Wilcox (PWRs). In addition, General Atomic is the vendor for one commercial Nuclear plant, a High Temperature Gas Cooled Reactor (HTGR). There are major differences in design between PWRs, BWRs and HTGRs. And even among the three PWR vendors, there still remains significant differences in design.

There are several major A/Es who have designed the Balance of Plant (Non-NSSS) portions of US nuclear plants. The major A/Es include Bechtel, Stone and Webster, Sargent and Lundy, Ebasco, United Engineers and Constructors, Gilbert Associates, Burns and Roe, etc. Each A/E has developed their own design philosphies, and approach to safety and licensing issues.

In comparison, France has essentially one Utility-Owner, (Electricite de France, EdF), one vendor (Framatome), and one A/E (EdF does its own A/E work).

To summarize, then, while the American nuclear

industry is about three times larger than France's, it is far more diversified. The impetus for Utilities, Vendors and A/Es to "join hands" and develop a SNUPPs design is undermined by diversity of interests, as well as by anti-trust implications.

(2) Seismic design criteria have been imposed on all US nuclear plants since the late 1960s. In section 2 of this report, we saw that seismic isolation design concepts were not widely discussed during that time era. Hence, the design philosphy in building American plants evolved along traditional lines.

For the few American nuclear plants having input SSE motions greater than 0.20 g, the design philosophy has been to build them to meet accepted NRC standard review. In effect, this has meant building them stronger, using the same design rules as for plants in lower seismic zones. (As a note, the seismic safety of these plants has been severely questioned, as will be discussed in section 3.5).

(3) The US NRC has a reputation for being an adversarial regulatory body towards the American Utilities, the plant owners.

The practical implication here is that the NRC does not tend to develop new design ideas: only to regulate what is given to them. For example, Offshore Power System's alternative Floating Nuclear Plant design concept has taken some ten years since the early 1970s to license (almost) at the NRC. In this lag time, all Utilities orginally interested in purchasing such a plant have abandoned their plans: the extended licensing time and additional cost implications played some part in these cancellations.

In comparison, the French CEA works with industry (i.e., EdF and Framatome) to develop new designs jointly. Needless to say, the licensing of a French plant is far simpler and involves far shorter time than the licensing of an American plant.

The author suggests that US engineers are in fact aware of the technical benefits of seismic isolation for nuclear plants. However, the harder to evaluate non-technical issues (such as licensing) present such major hurdles to the US engineer that he has chosen less risky traditional seismic design methods in Nuclear Plant design.

It is interesting to note that there is current controversy in the US nuclear community about the seismic capability of electrical and mechanical equipment in older plants. At issue are questions of whether the equipment was originally properly qualified to operate under required seismic motions. In part, the problem lies in the fact that documentation showing the operability of this equipment was not kept during the early years of the US nuclear program. Seismic isolation systems may become a method to resolve this issue in the future.

3.5. Future of seismic isolation in the US

At this point in time, 1984, does seismic isolation play a role in the future of the US nuclear industry?

A simple answer would be no. No new plant has been ordered by an American Utility since 1978. Since 1975, there have been upwards of 50 plant cancellations, and assuredly there are more to come. In fact, General Electric has announced its intention of getting out of the new nuclear plant business. Domestic sales prospects at Westinghouse, Combustion Engineering and Babcock and Wilcox do not look much better for new nuclear plant orders.

Thus, until new plant orders again occur, the most obvious seismic isolation application – that is, for entire nuclear power plants – is not promising.

There is, however, a marketplace for US designed nuclear plants in foreign countries. Westinghouse, for example, has plants operating or under construction in Japan, Korea, Taiwan, Brazil, Philippines, Sweden, Italy, Spain, Yugoslavia, and Switzerland. In the US, Westinghouse and Bechtel have recently jointed up to build SNUPPs plants in relatively low seismic regions: Kansas and Missouri (Wolf Creek and Callaway Nuclear Plants). As a conjecture, Westinghouse could be competitive in the world nuclear market by offering their SNUPPs plants, when situated in locations with higher seismic requirements, suitably modified by adding a base isolation system to control input seismic motions.

Another application of base isolation systems in US nuclear power plants is in retrofit design work. Applications could arise from the desire to isolate equipment from seismic shock, rather than upgrade the seismic capability of the equipment.

As a review, let us summarize exactly what are the non-technical benefits from using a base isolation system to control seismic input to the nuclear plant:

Cost

As explained previously under the French SNUPPs example, a system which can limit the seismic input to a nuclear plant is useful in SNUPPs designs. Cost savings accrue from having only one set of designs and specifications; possibly using the same equipment in a low seismic zone as well as in a high seismic zone; from reduced seismic design requirements for equipment inside a seismically isolated plant.

Time

Building a plant in a high seismic zone calls for specialized equipment tests. Having to comply with

IEEE 344-75, these tests are universally regarded as time consuming, prone to failures, and expensive [11]. The delays in procurement and testing also add to plant interest carrying costs.

Licensing

Pros: Once the first SNUPPs plant on a seismic isolation system is licensed, the next plants are very easily licensed. Cons: The NRC is not known to be openly agreeable and easily convinced about any system out of the ordinary. Thus the first seismically isolated plant could be held up by a lengthy NRC license review.

Risk

A utility ordering a SNUPPs plant in a high seismic zone, but atop a seismic base isolation system, is somewhat protected against a "future fault find," as, for example, the Hosgri fault, which was located near Diablo Canyon well after its construction had started.

The utility, Pacific Gas and Electric, owner of Diablo Canyon, has incurred significant cost increases, schedule delays, and licensing intervenor actions, due to the discovery of the Hosgri near field fault. Countless recalculations since finding the Hosgri fault has led to several redesigns of Diablo Canyon for larger and larger earthquakes. If Diablo Canyon had been designed atop a seismic base isolation system, finding the Hosgri near field high frequency fault would have had no effect on plant seismic design.

Diablo Canyon is not alone in seismic hazard risks. The San Onofre nuclear power plants have long been attacked as being unsafe, seismically, by intervenor groups. The licensing of this plant is still ongoing. And Humboldt Bay, a small (65 MW_e) plant in Northern California, has been shut down indefinitely. For Humboldt Bay, the utility (PG and E) found that the cost to upgrade it to withstand seismic motions now required by regulatory bodies, but not originally designed for, exceeded the benefits.

Safety

For each of these examples, Diablo Canyon, San Onofre and Humboldt Bay, the use of seismic isolation would not only beneficially affect seismic risk, but also eliminate the risk of finding a near field fault, and enhance the seismic margin of the plant. This leads to enhanced seismic safety, and thus reduced risk to the public of radiaction leakage post-earthquake.

4. Technical aspects of seismic isolation applications for nuclear power plants

Up to this point, we have only looked at the non-technical points about seismic isolation for nuclear power plants. Indeed, what are the technical points which make isolating plants so attractive?

The two most important technical points are the following:

(1) Reduced building forces, moments, story drifts.
(2) Reduced floor response spectra.

These two points combine to enhance the seismic safety and reduce risk of the nuclear plant. The following sections discuss the technical points leading to these conclusions.

4.1. Safety constraints

The literature [1–3] suggests several types of seismic isolation systems can be successfully used to protect buildings during earthquakes. For nuclear power plants, though, we want to make sure than any seismic isolation system we use can also pass rigorous constraints imposed to meet the need for failsafe safety of nuclear plants.

What are these constraints?

(1) The bearings and energy absorbers must be capable of sustaining many seismic shocks without maintenance.
(2) The isolation system must be serviceable, both for inspection, maintenance or replacement purposes.
(3) The system must be redundant: i.e., no single element's failure should impair the nuclear plant's safety.
(4) The system must be able to survive all forseeable environments, from cold, to heat, fire, radiation, flooding, etc.
(5) The system should be overload-insensitive. In other words, should a seismic event far greater than the postulated SSE occur, the isolation system cannot fail in a "brittle" mode.

Table 4 describes how various commonly discussed isolation devices compare against these nuclear plant safety constraints.

Given these constraints, ruled out of the design of isolation systems are any devices that are hydraulic in nature, prone to brittleness, or subject to a short lifetime (less than forty years).

The exact design details of an isolation system meeting all these constraints are outside the scope of this report. However, in the following sections, we will describe an isolation system which potentially meets these constraints. Then, we will show how this isolation system meets the two technical points mentioned at the outset of this section, thus leading to enhanced seismic safety.

Table 4
Isolation device characteristics

Constraint	Steel rubber bearings	Energy absorbers	Hydraulic devices	Friction systems
1. No maintenace required after seismic event	ok	ok	ok	ok
2. Inspection requirements	ok	ok	costly	difficult
3. Replaceable	ok	ok	ok	NA
4. Removable for Testing	yes	yes	yes	possible
5. Redundancy	yes	yes	yes	yes
6. Properties retained under				
– temperature variances	yes	yes	maybe	unlikely
– pressure variances	yes	yes	possible	yes
– radiation variances	possible	yes	possible	yes
7. Failsafe in overload condition	yes in combination with energy absorbers	yes	yes	yes with analysis

4.2. Theory of an ideal seismic isolation system

A practical seismic isolation system will be described in section 4.3, and is comprised of rubber bearings and energy absorbing (EA) devices. It works as a nonlinear

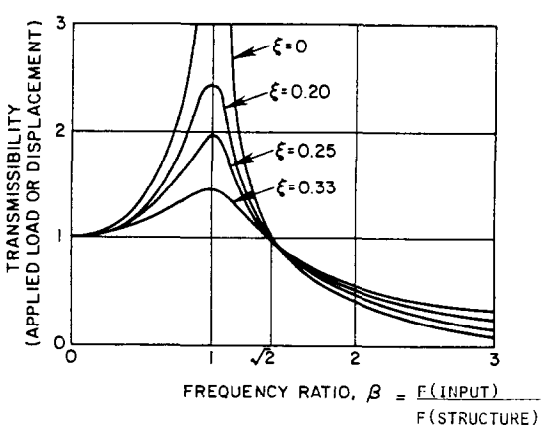

Fig. 1. Vibration transmissibility ratios for simple isolation system.

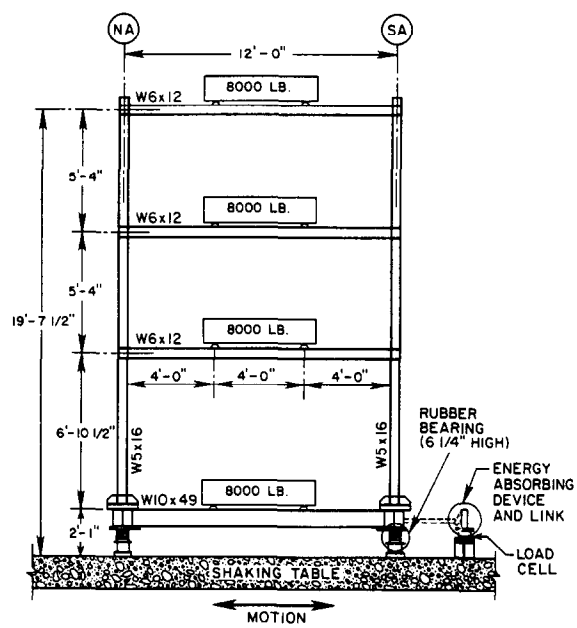

Fig. 2. 3 Story test model structures on an energy absorbing (EA) foundation.

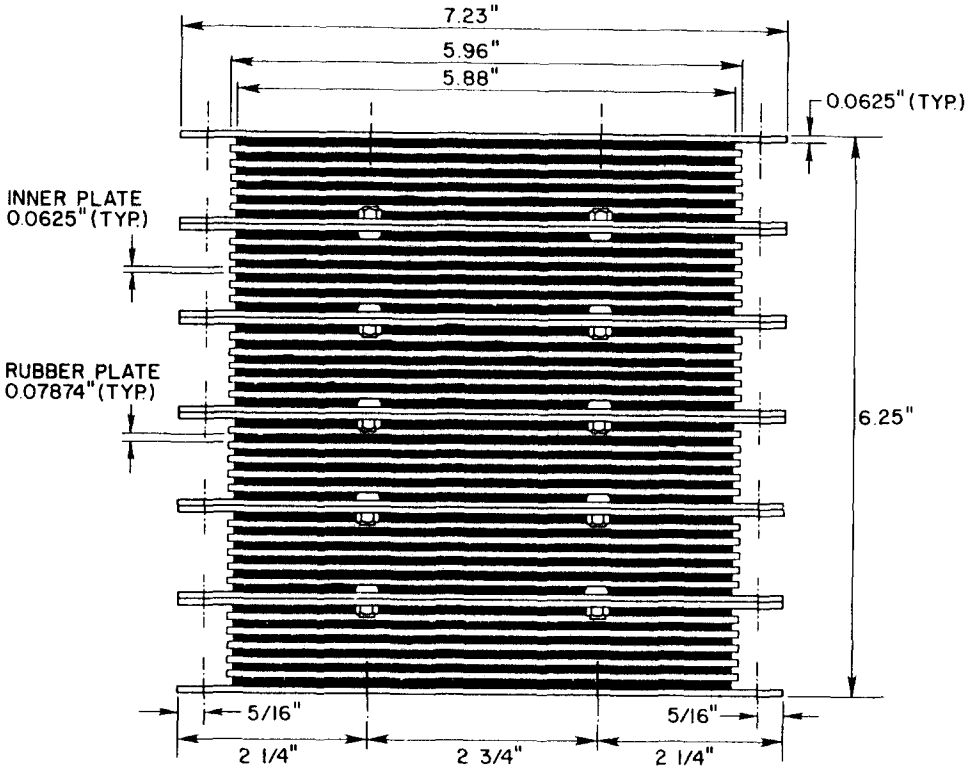

Fig. 3. Dimensions of rubber bearings.

isolation/energy absorption system. To understand the evolution of the design of this system, let us first review simple linear vibration isolation theory.

Ideally, in seismic isolation, we want to detune the nuclear plant structures from the input earthquake vibration. In other words, we want the transmissibility of the earthquake motion to the nuclear plant structures to be very low, much less than 1.0. This theory is shown in fig. 1, adapted from ref. [12].

Hypothetically, we could apply this theory as follows. Most earthquake energy ranges between 1 Hz and 10 Hz. The first horizontal mode frequency of a conventionally designed US nuclear plant is about 4 to 5 Hz. In theory, then, we could simply mount the nuclear plant on springs, to make its first mode only 0.5 Hz, and we would have done our job. (Thus B greater than 2 for all input frequencies.)

But this ideal system has several problems:

(1) We may have an unusual seismic motion, with lots of energy centered right at 0.5 Hz.

(2) The nuclear plant, mounted on very soft lateral springs, may experience significant motions due to wind loads.

(3) The very largest earthquake could cause displacements outside the capacity limits of the rubber bearings, potentially failing the bearings in a "brittle" fashion.

Given these strong drawbacks, we must modify our seismic isolation system to include more than just a simple rubber bearing system. The possibilities include the following:

(1) Friction plates: These are designed to absorb energy after the deflection limit of the rubber bearings is reached. Such friction plates are now in use in the French design. These plates, however, have two major drawbacks. First, wind excitation problems still exist. Second, uncertainty to the long term coefficient of friction exists, which can be of particular importance for a nuclear plant station with a forty-year design life.

(2) Mechanical fuses: these fuses stay intact up to a certain lateral base shear is reached, after which they snap. Prior to their failure, the nuclear plant is rigidly linked to the ground, and experiences no wind oscillations. The problem is that the largest earthquake could still cause lateral deflections ex-

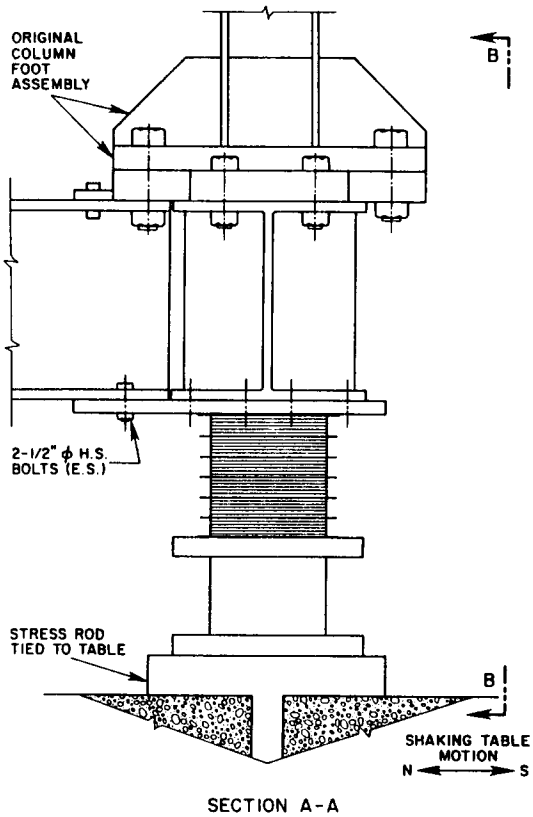

Fig. 4. Rubber bearing connections – section A.

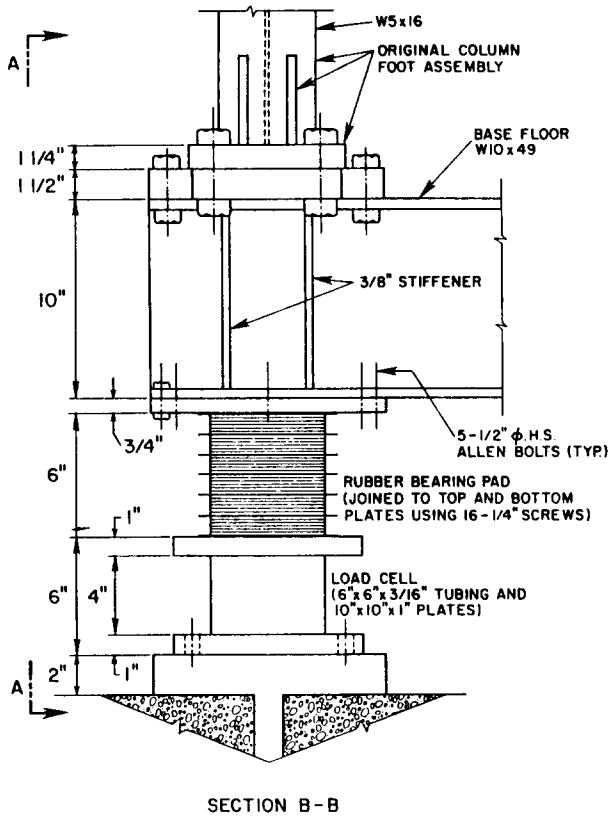

Fig. 5. Rubber bearing connections – section B.

ceeding the rubber bearings capacity. Also, upon breakage of the link, a sudden high frequency shock is induced into the structure, potentially causing high frequency induced vibration failures in sensitive safety-related mechanical and electrical equipment.

(3) Hydraulic dampers: These are good for absorbing energy, but poor on maintenance. Thus, they are not considered feasible for nuclear plant applications.

(4) Mechanical energy absorbers: These (EA) devices absorb energy by two way torsion yielding of steel. They maintain the nuclear plant rigid under wind excitations, and yield only after a set point earthquake occurs. Under the largest earthquake, they become rigid again, preventing unlimited lateral deflections of the rubber bearings, and hence, any potential for "brittle" failure.

4.3. Description of a practical seismic isolation system

The numerical results which follow are based upon a seismic isolation system utilizing rubber bearings and torsion energy absorbing devices. This system has been analyzed and experimentally verified in detail in prior reports [13,14]. The following paragraphs present a brief description of the system.

The practical seismic isolation system has been built and tested using a three-story scale model building, at the Earthquake Engineering Research Center, Berkeley. The three-story model is shown in fig. 2. The rubber bearings are detailed in figs. 3, 4 and 5. Their stiffness characteristics are shown in figs. 6 and 7 (very soft horizontally, very stiff vertically). The torsion EA devices are shown in fig. 8.

Frequencies and mode shapes for the model are shown in tables 5 and 6 for various (FIX, EA, and Rubber) base foundations. While these frequencies are not exactly representative of nuclear plant systems, they are reasonably similar enough to explain the technical aspects of seismic isolation systems. In this report, FIX, EA and Rubber base conditions refer to the following foundations designs:

FIX Standard design foundation, i.e., "fixed" to

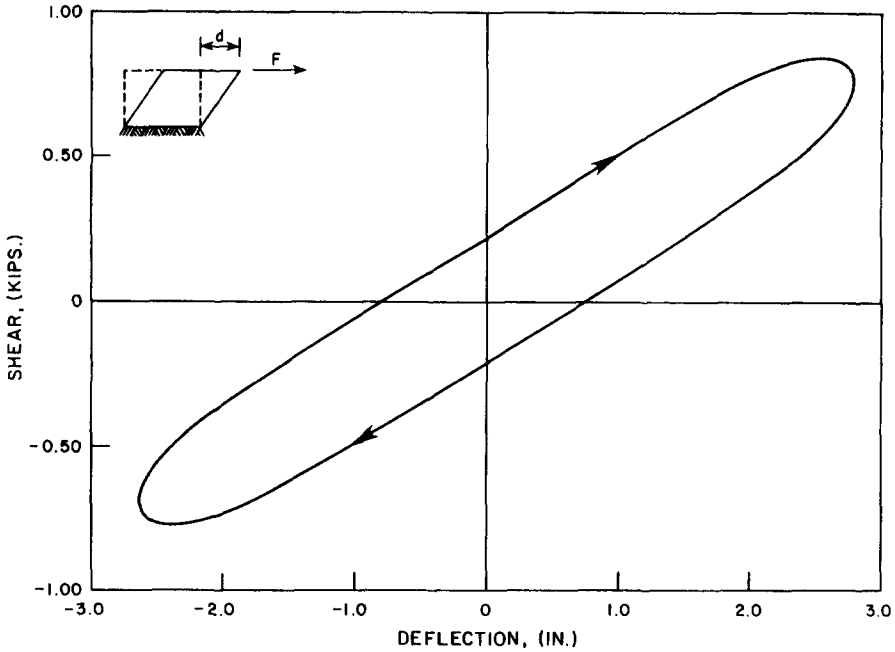

Fig. 6. Horizontal stiffness of rubber bearings.

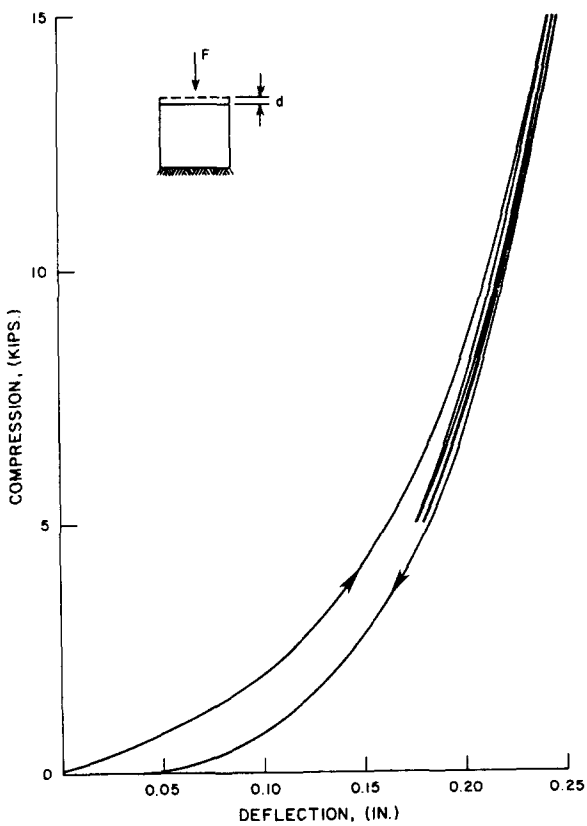

Fig. 7. Vertical stiffness of bearings.

the ground. No isolation system used.

EA — The recommended practical isolation system. Comprised of rubber bearings and torsion Energy Absorbing (EA) devices.

Rubber — A simple isolation system. Comprised of rubber bearings only.

4.4. Theoretical performance of the EA Seismic Isolation system

Let us again return to basic seismic response theory, in order to understand the expected performance of the EA Seismic Isolation system. For our discussion, we will refer to elastic response spectra of the El Centro, (1940) earthquake, shown in fig. 9.

For our purposes, we wish to compare seismic response of an unisolated nuclear plant (i.e., the FIX foundation case), with the isolated nuclear plant (i.e., the EA foundation).

Let us assume that our hypothetical nuclear plant, as designed with a conventional FIX foundation, has first mode 2 Hz, and 2% damping. (About the same as the FIX foundation model used in the experimental tests.) The hypothetical nuclear plant would respond with a peak acceleration roughly 3 times the seismic ground

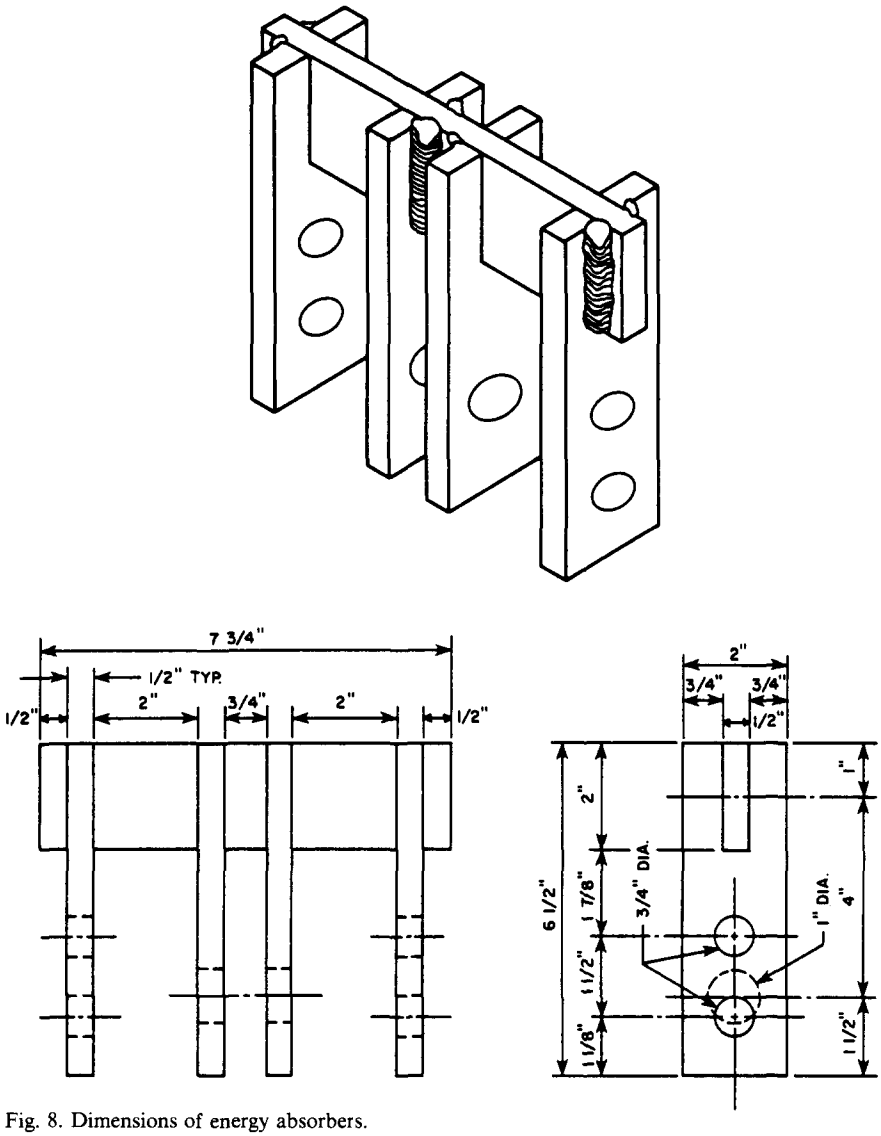

Fig. 8. Dimensions of energy absorbers.

Table 5
Frequencies and mode shapes for FIX and simple RUBBER foundations

	Fix foundation		Rubber foundation		
	1st mode	2nd mode	1st mode	2nd mode	3rd mode
Frequency:	2.27 Hz	7.83 Hz	0.58 Hz	3.84 Hz	8.89 Hz
Mode shape					
3rd floor	1.00	1.00	1.00	1.00	1.00
2nd floor	0.77	−0.62	0.98	0.42	−0.85
1st floor	0.41	−1.23	0.96	−0.33	−1.10
Base floor	–	–	0.92	−1.03	0.88

Table 6
Frequencies and mode shapes for EA foundation

	Elastic energy absorber		Yielded energy absorber	
	1st mode	2nd mode	1st mode	2nd mode
EA foundation	Elastic stiffness = 15 kg/in		Yielded stiffness = 0.8 kg/in	
Frequency	1.65 Hz	4.64 Hz	0.682 Hz	3.84 Hz
Mode shape				
3rd floor	1.000	−0.773	1.000	−0.969
2nd floor	0.883	−0.161	0.977	−0.398
1st floor	0.696	0.529	0.939	0.336
Base floor	0.461	1.000	0.889	1.000

zero period acceleration. (Denoted as Point A in fig. 9.)

Alternatively, the EA isolated nuclear plant would have a different response. When the large seismic shock occurs, the EA devices yield. The hysteresis loops developed by these devices have been shown to be equivalent to more than 20% viscous damping [13]. Further, upon yielding, the lateral stiffness of the foundation decreases considerably. The data in table 6 show that upon yielding, the first mode frequency lowers from 1.65 Hz to 0.68 Hz. As the foundation alternates from the yielded condition to the elastic condition on each oscillation cycle, the effective first mode frequency is a little over 1 Hz.

This being the case, we return to fig. 9. As the two drawnin lines indicate, we move from point A (2 Hz, 2% damping) to point B (1.0 + Hz, 20% damping). The hypothetical nuclear plant now only responds with a peak acceleration roughly equal to the seismic zero period acceleration (a three-fold decrease from the FIX foundation case).

4.5. Reduction in nuclear plant building responses using the EA Seismic Isolation system

In this section, we will describe experimental results which compare the difference between a FIX Base and

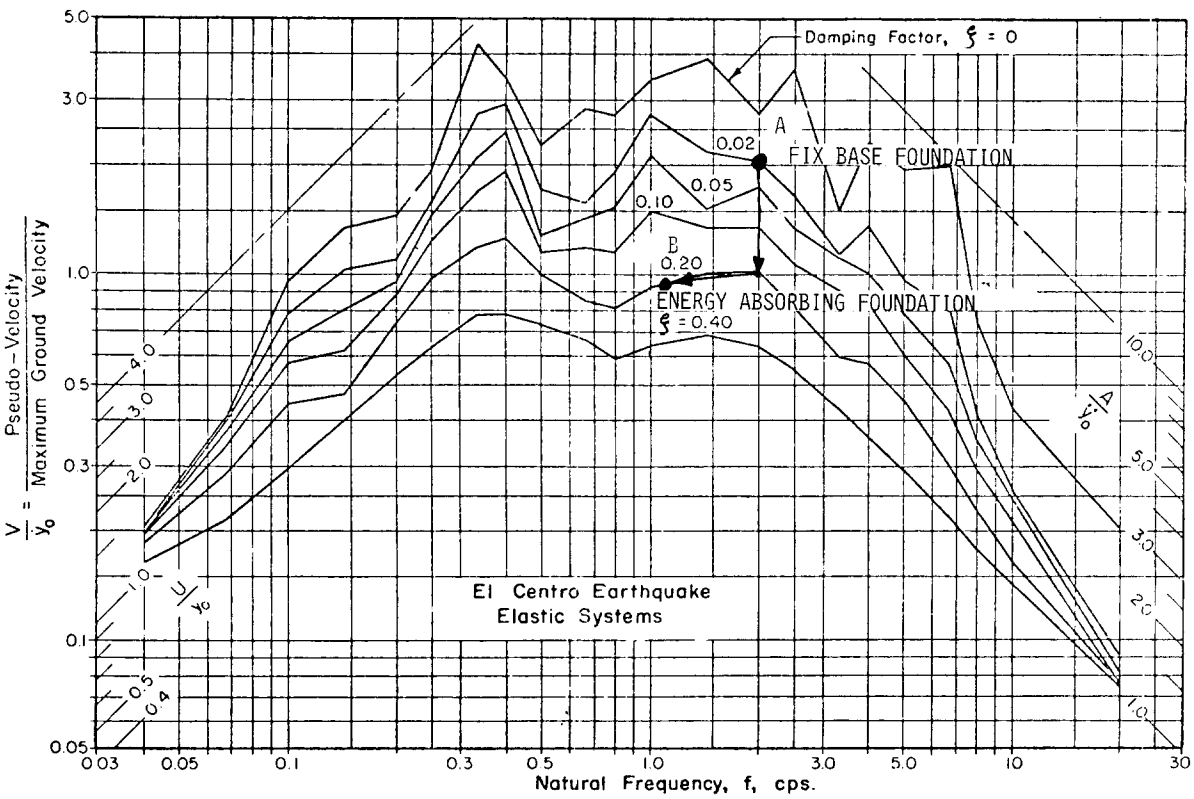

Fig. 9. El Centro response spectra.

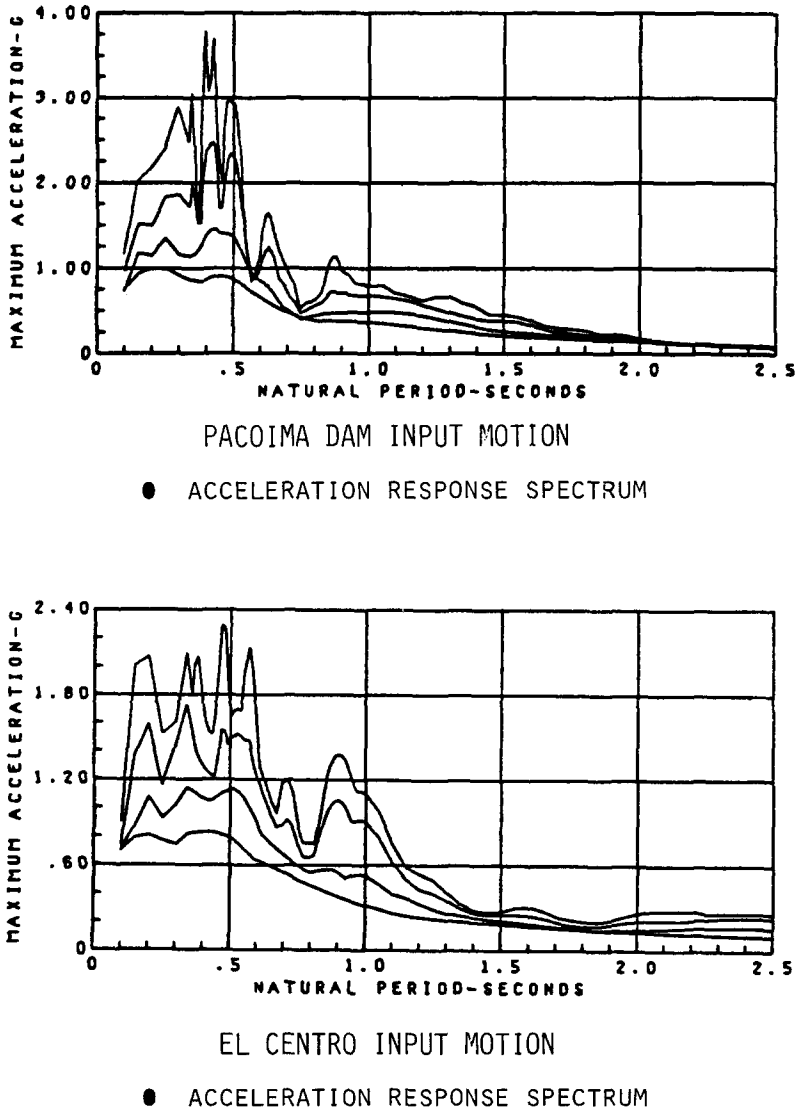

Fig. 10. Test input spectra.

an EA seismic base isolation nuclear plant design. The data for this section are taken from ref. [13]. In that test sequence, a large number of variations were considered, such as earthquake trace, earthquake intensity, type of energy absorbing device. In that report, conclusions were made concerning the ideal design characteristics of the EA devices: here we will ignore these more or less "finetuned" differences, and concentrate on comparing FIX versus EA foundation results.

To summarize, the test program used two intense earthquake traces: El Centro (0.63g), and Pacoima Dam (0.62g). The acceleration response spectra for these, as used in the test program, are shown in fig. 10. The following are comparisons between the FIX and EA foundation responses:

Acceleration

Figs. 11a and 11b compare the EA and FIX foundation tests due to the El Centro (0.63g) input. As expected, the FIX foundation shows a peak amplification to about 2g (third floor), for an amplification factor of 3. Further, as expected, the EA foundation peak acceler-

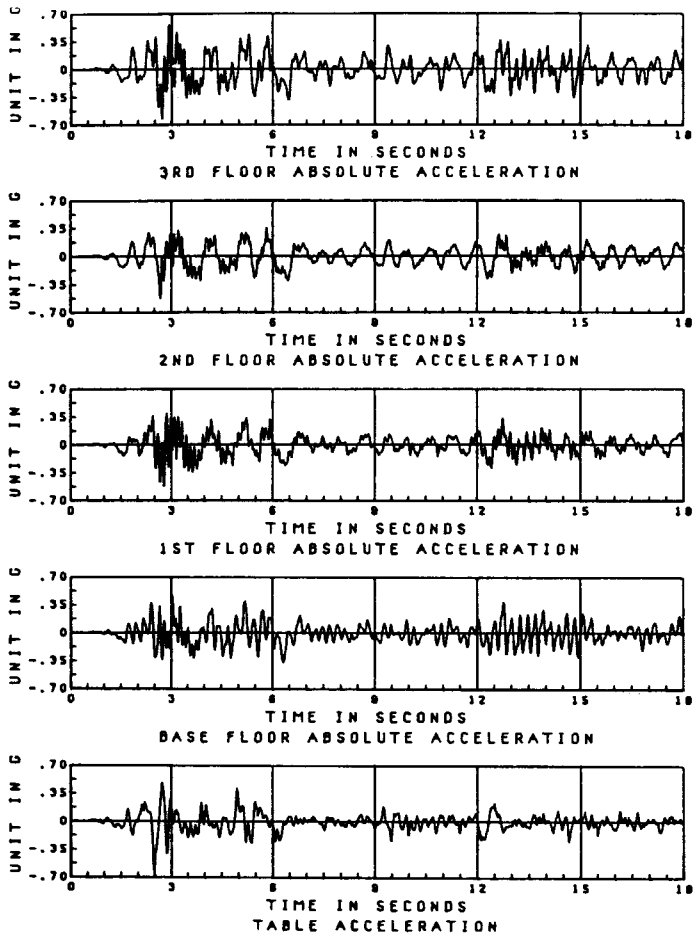

EL CENTRO

- EA FOUNDATION
- ACCELERATIONS

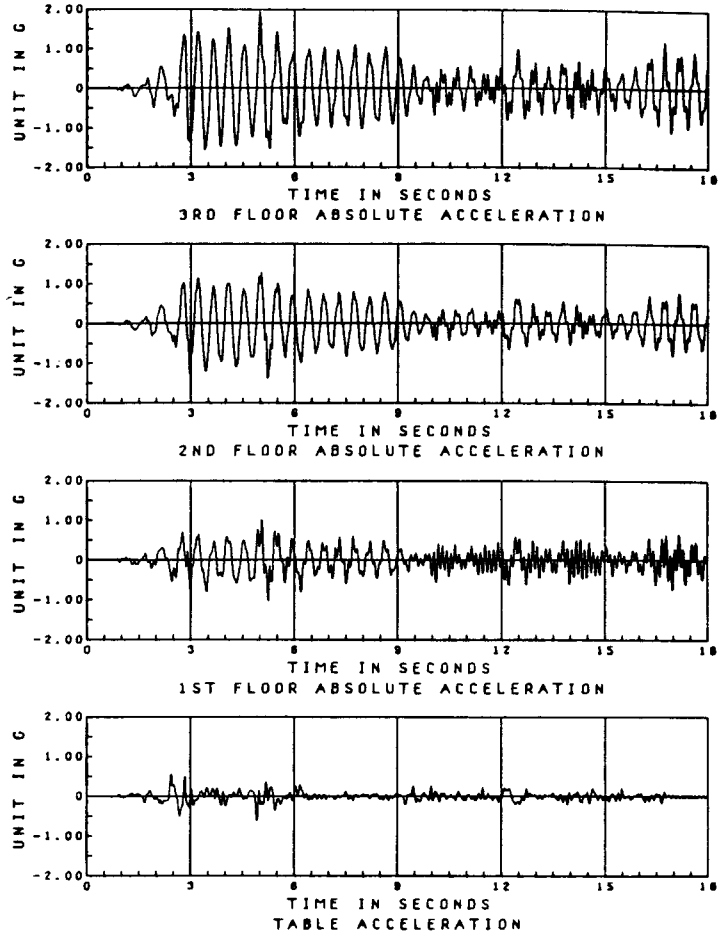

EL CENTRO

- FIX FOUNDATION
- ACCELERATIONS

Fig. 11. Test structure response to El Centro.

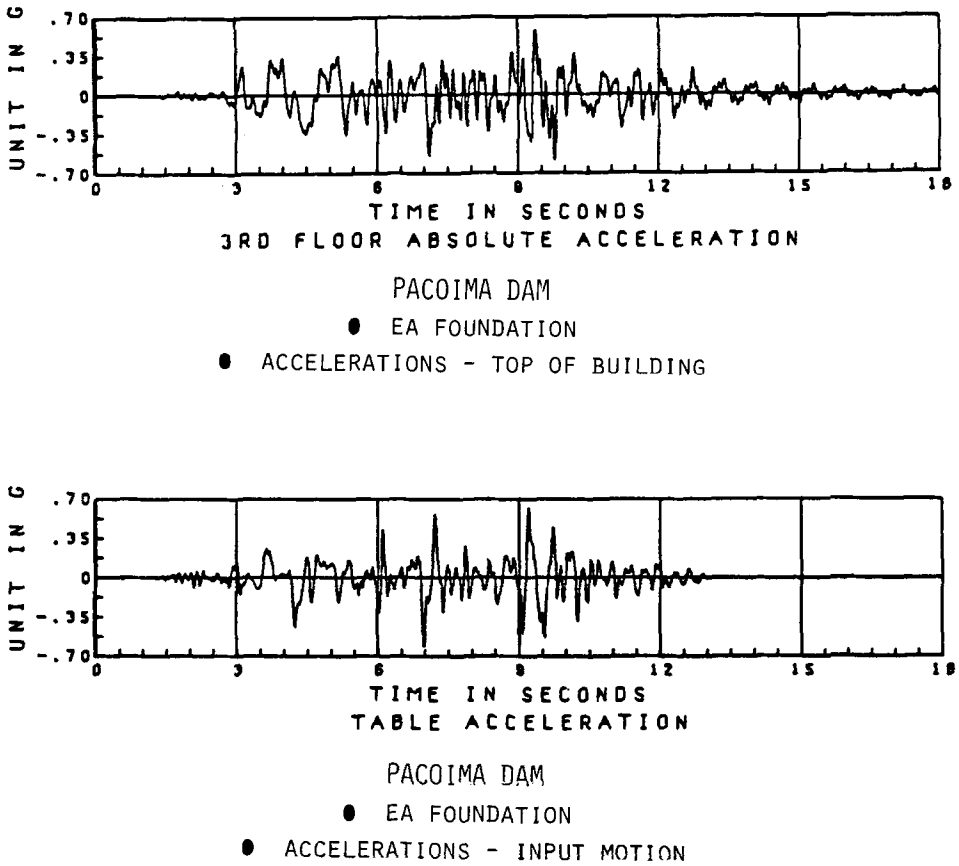

Fig. 12. Test structure response to Pacoima Dam.

ation response of 0.61g about equals the peak table acceleration, for an amplification factor of 1. This amplification factor of 1 is also duplicated for Pacoima Dam motions (fig. 12).

Moments

Fig. 13 compares the Base Overturning Moments for the FIX and EA tests for both the El Centro and Pacoima Dam motions. The EA isolated structure shows base overturning moments lower by about a factor of 3 from the FIX moments.

Shears

Fig. 14 shows a reduction by about a factor of 3 in base shears, between the FIX and EA foundations.

Story Drifts

Fig. 15 shows a reduction by about a factor of 2 in interstory drifts between the FIX and EA foundations. (The data shown are for the worst case floor levels.)

4.6. Reduction in floor response spectra

In nuclear power plants, we are equally or perhaps more concerned with the seismic performance of safety related equipment than we are with the seismic performance of the actual buildings. In part, this is because mechanical and electrical equipment can malfunction in a seismic event in many more ways than the buildings themselves: for example, while equipment and buildings must both survive stress criteria, equipment must also meet deflection criteria (such as proper closure of valve seats), relay chattering criteria (such as in circuit breakers), and many other functional criteria (see IEEE 344-75 for a more complete discussion [11]).

The seismic input to equipment in nuclear plants is

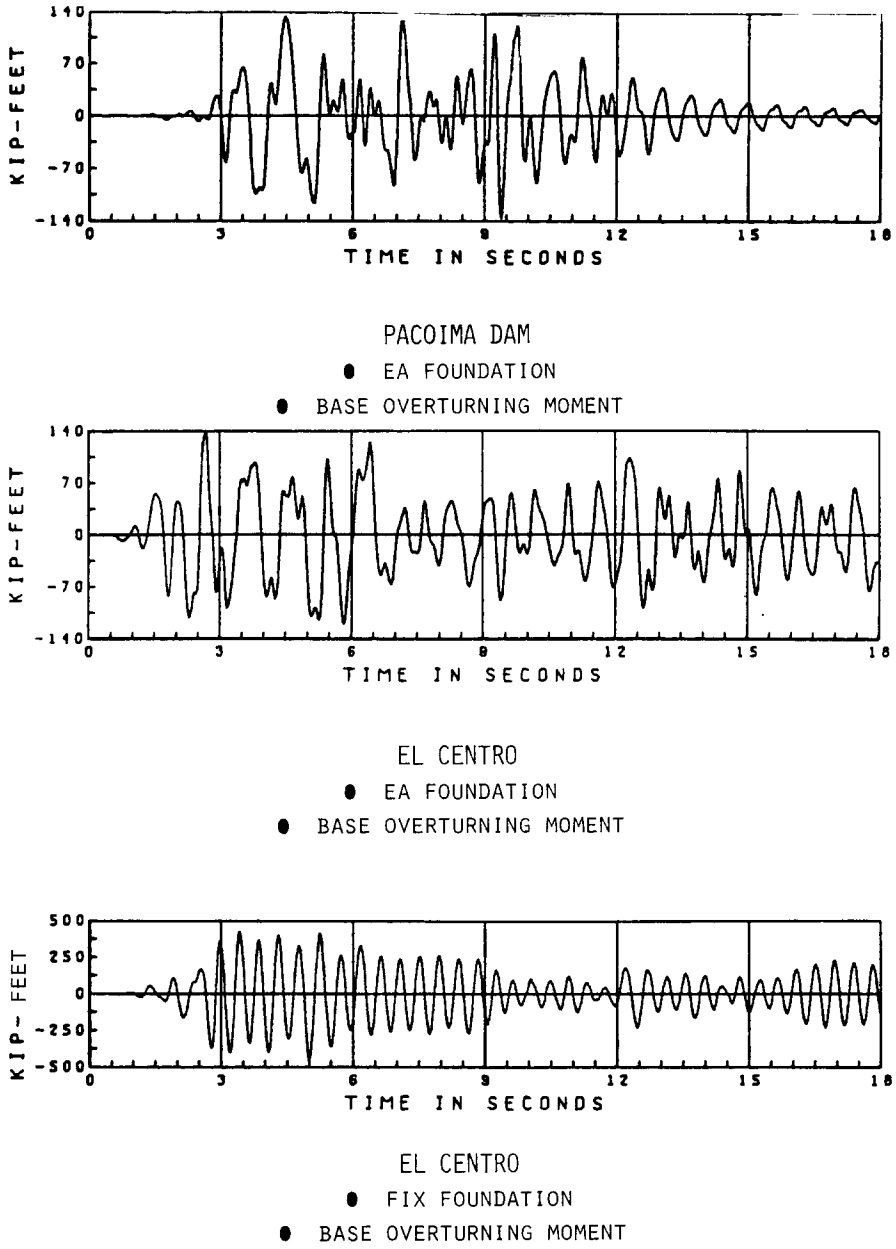

Fig. 13. Test structure – base overturning moments.

often referred to as "floor response spectra". The floor response spectra are derived from the nuclear plant's input ground seismic motion filtered through the building's own response. Each floor level in the nuclear plant will, in general, have a unique floor response spectra. (The interested reader should see ref. [15] for special discussion on equipment–structure interaction, especially for "tuned" equipment.)

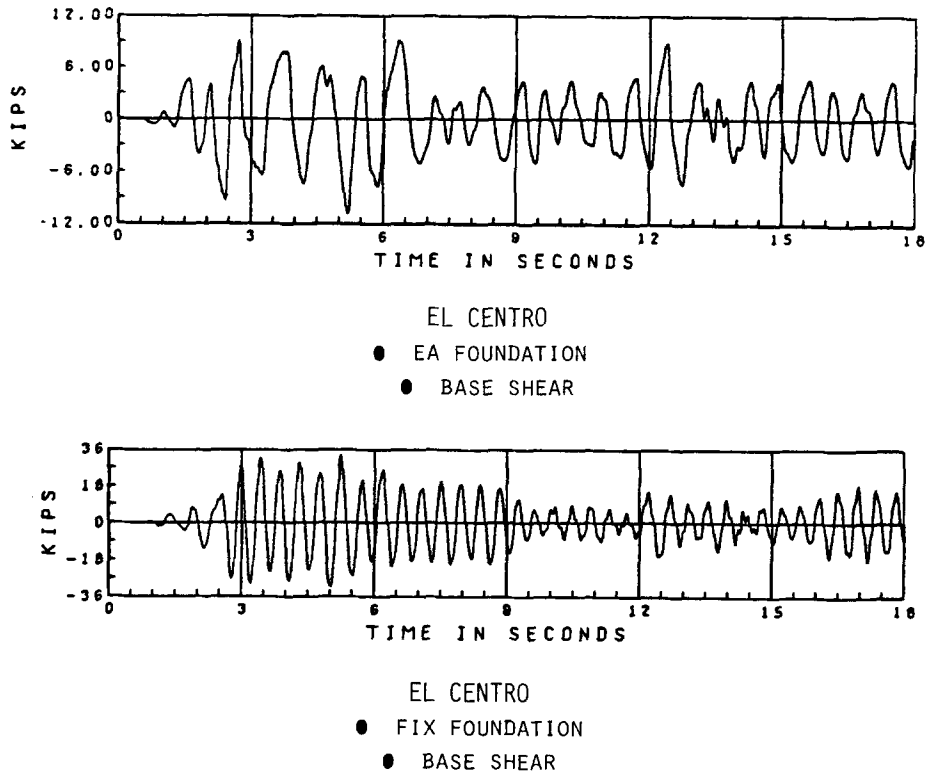

Fig. 14. Test structure base shears.

Equipment seismic qualification is a multi-million dollar engineering task in the design of nuclear plants. A properly designed seismic isolation system should reduce the floor response spectra, and thus part of the engineering cost, equipment procurement cost, etc. Ultimately, this would enhance the seismic safety of the nuclear plant.

From the test data of ref. [13], the acceleration time histories of which are shown in fig. 11, we can derive the floor response spectra for the top (third) floor of the test structure, both in the FIX and EA foundation cases.

For completeness, we have redrawn the El Centro input ground spectra of fig. 10 (period scale), in fig. 16 (frequency scale), and superimposed Reg. Guide 1.60 spectra for a Zero Period Acceleration of 0.50g. While the fit is not exact, this should give the reader the familiar Reg. Guide 1.60 reference point.

Fig. 17 shows the floor spectra resulting from the El Centro input motion of Fig. 16, for the FIX foundation case. The reader should not be surprised at the 21g peak spike in the FIX base case floor spectra. Such spectra are not uncommon in actual nuclear plants designed in high seismic zones.

From this floor response spectra, the reader can see that any equipment subjected to this spectra, with a first mode between 1.8 Hz and 3 Hz, is going to be severely shaken.

Fig. 18 shows the same floor spectra, but for the EA foundation case. Now the floor spectra has only a 3.4g peak value. For convenience, fig. 19 combines figs. 17 and 18, to the same scale.

The results are dramatic: an average floor spectra reduction of 2 to 3 times, with as much as 10 times at certain resonance frequencies. Also, the spectral peak reduction is more than 6 times.

These results lead us to the following important conclusions: a SNUPPs plant, designed to a 0.20g SSE motion, could be identically designed in a higher seismic site location, say 0.50g SSE, *without* altering building design or equipment procurement specifications. As discussed earlier in section 3, this could result in engineering cost savings in the range of $50 million.

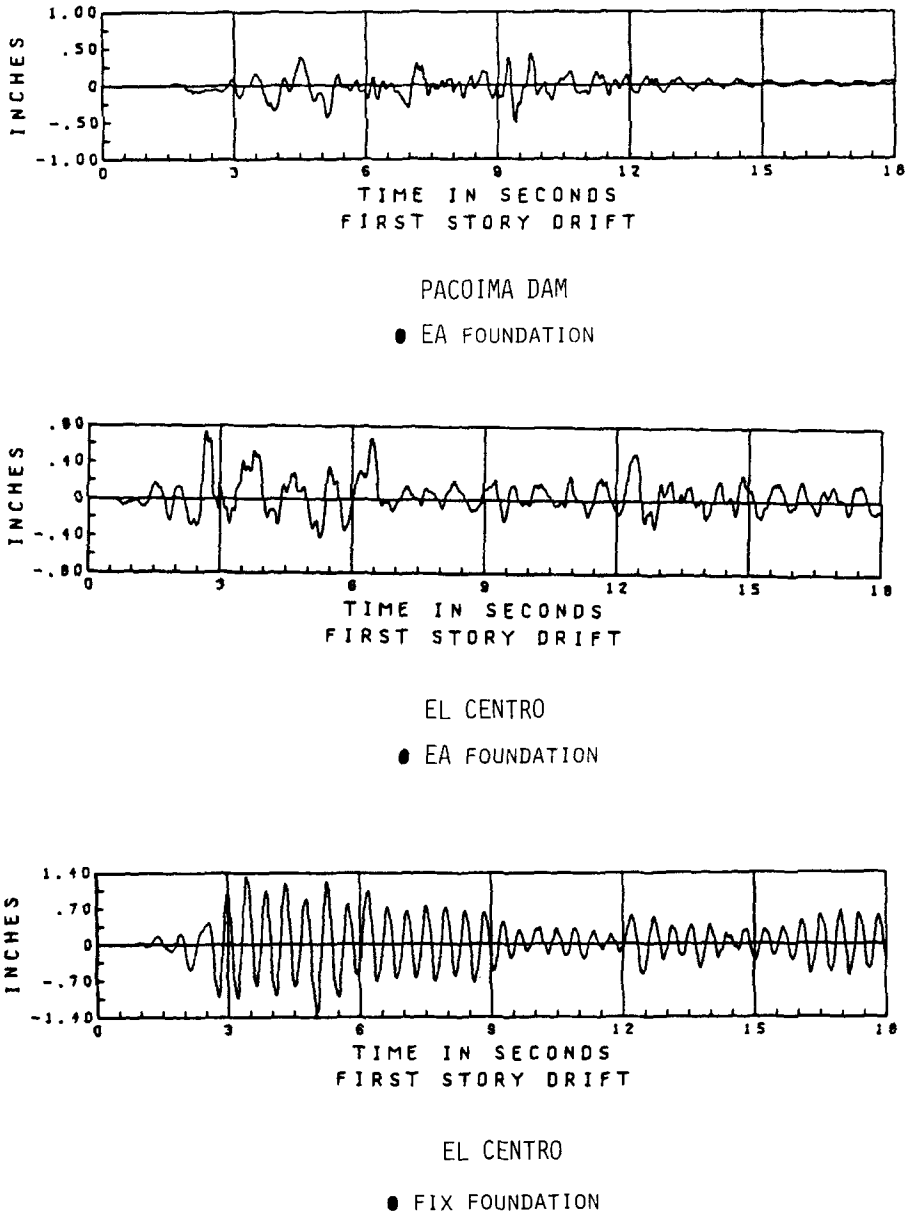

Fig. 15. Test structure story drifts.

For completeness, figs. 20 and 21 show, respectively, the same floor spectra, only for the simple Rubber base isolation system and the mechanical fuse isolation system (shear pins and rubber bearings). The input El Centro motion was only 0.33g for these two test cases, as compared to 0.63g for the FIX and EA cases. Individual reports describing these systems can be found in refs. [14,16]. While these floor spectra look advantageous, the isolation systems fail the performance constraints discussed in sections 4.1 and 4.2.

4.7. Seismic risk considerations

Risk is a main concern in granting licenses to operate a nuclear plant. Seismic considerations are among the hardest to quantify in terms of risk and subsequent

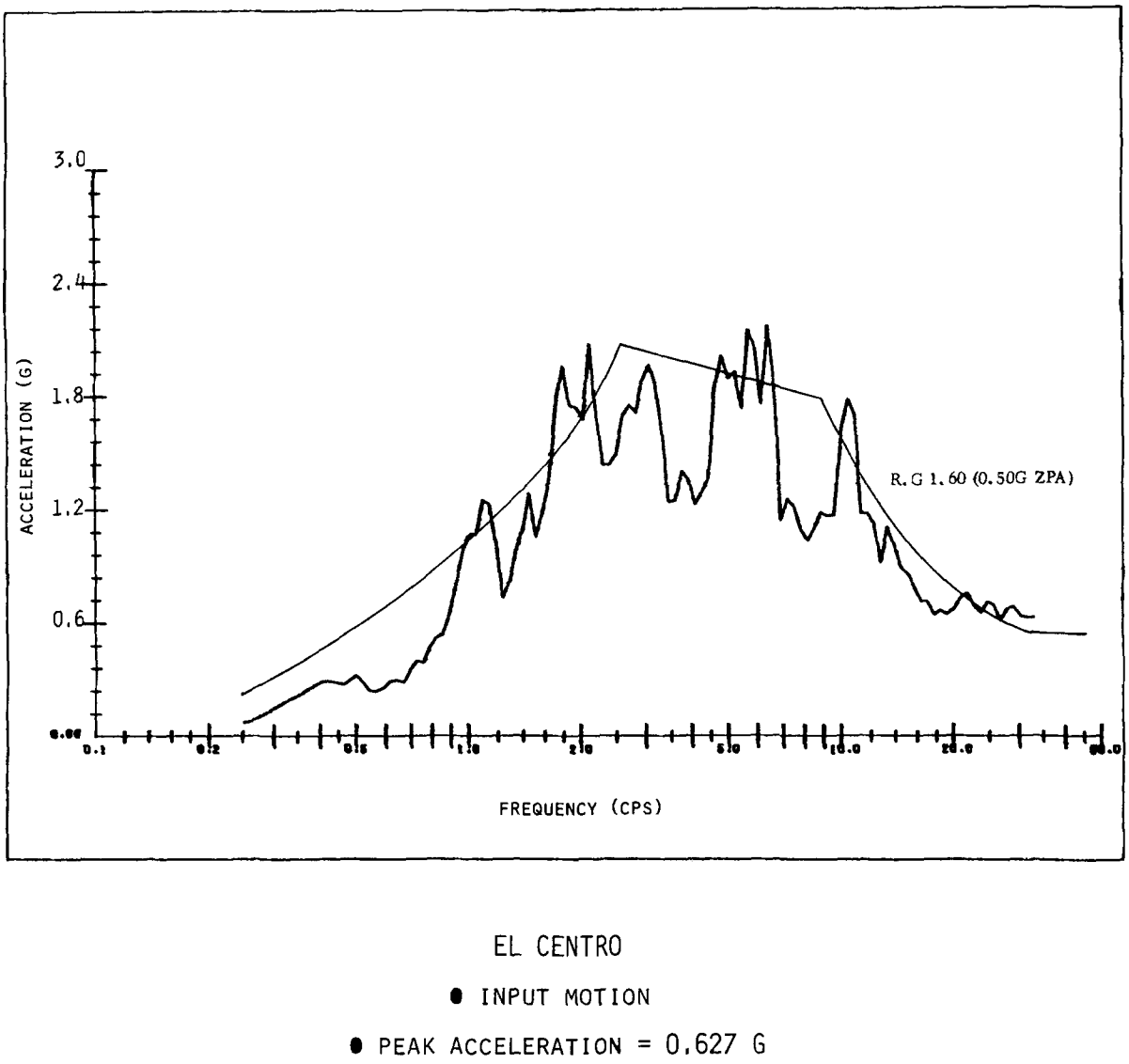

Fig. 16. Test ground motion versus R.G. 1.60.

impact on safety to the public and environment. In this section, we will discuss some aspects of seismic risk, and relate these to how a seismic isolation system controls the risks, and ultimately seismic safety.

In section 3.5 of this report, we briefly discussed the problems that Pacific Gas and Electric has faced with Diablo Canyon. In particular, the Diablo Canyon plant was originally designed for a moderate 0.35g SSE Reg. Guide 1.60 motion. After design and construction had started, a new fault, Hosgri, was discovered just three miles from the plant. Much engineering talent and state-of-the-art research was applied to this problem, and Diablo Canyon was rebuilt, in a backfit manner, to meet an 0.70g SSE Reg. Guide 1.60 motion. In this respect, the utility, PG and E, undertook a considerable risk in siting their nuclear plant in a potentially high seismic area. One aspect of this risk was that PGandE had no absolute certainty that all active faults could be found near their nuclear plant site; especially in seismically active California.

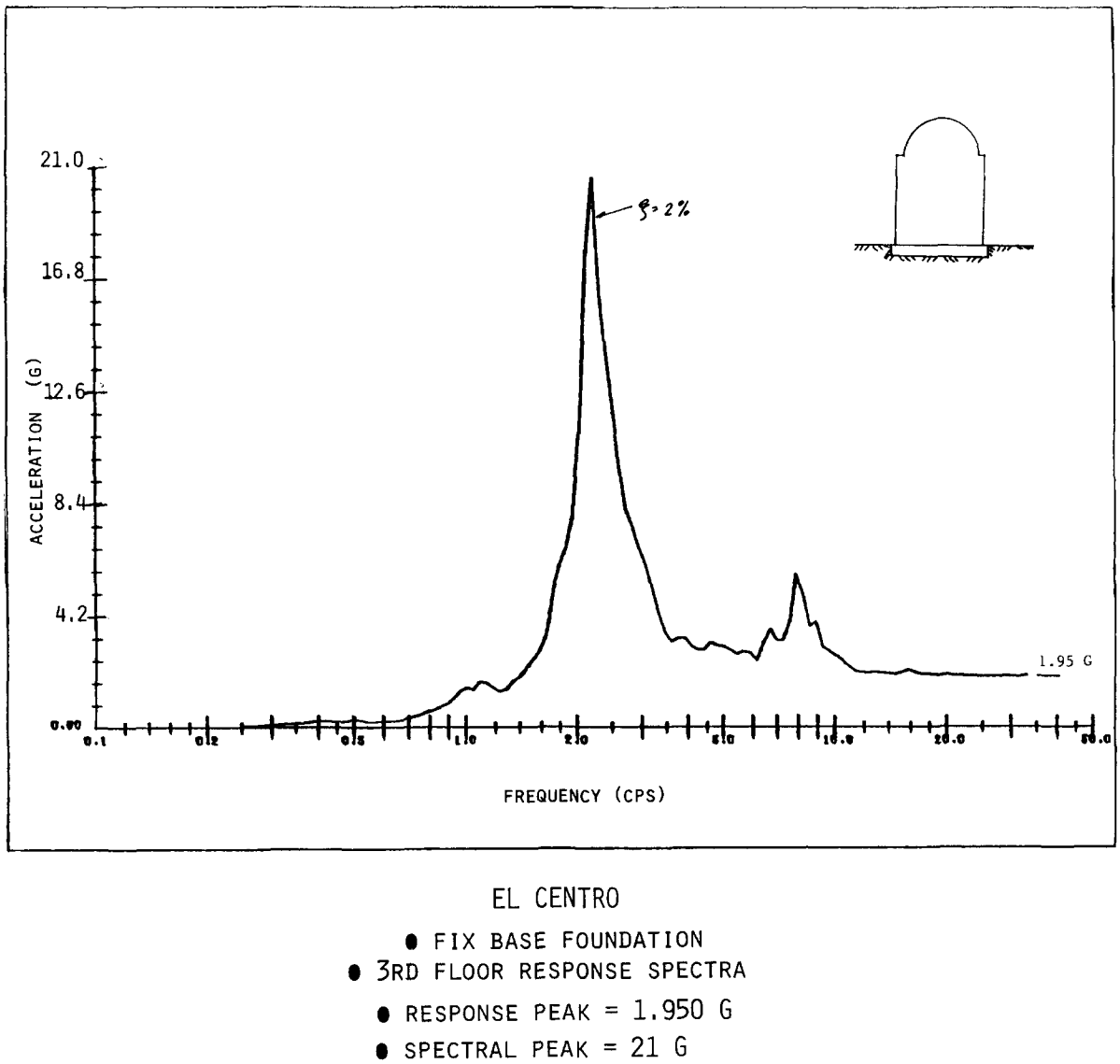

EL CENTRO

- FIX BASE FOUNDATION
- 3RD FLOOR RESPONSE SPECTRA
- RESPONSE PEAK = 1.950 G
- SPECTRAL PEAK = 21 G

Fig. 17. Floor spectra, fix foundation.

Another aspect of risk arises because current geological science is not so far advanced as to accurately and deterministically define the precise shape of the "SSE R.G. 1.60 spectrum" that a fault is capable of producing. Only through probabilistic analysis can the unknowns in regard to fault size, location, recurrence intervals, etc., be evaluated. A method for calculating the risks associated with a nuclear plant site specific SSE spectra is given in ref. [17]. Thus, seismic risk again enters the nuclear plant design from uncertainty in the SSE spectra.

A third aspect of risk arises because as our knowledge in geological science improves, and our collection of actual recorded seismic accelograms expands, we are observing a surprising phenomena. The engineering community once thought that a 0.30g motion (refer El Centro 1940 NS component) was about as severe a motion that could occur. But in 1971, the Pacoima Dam

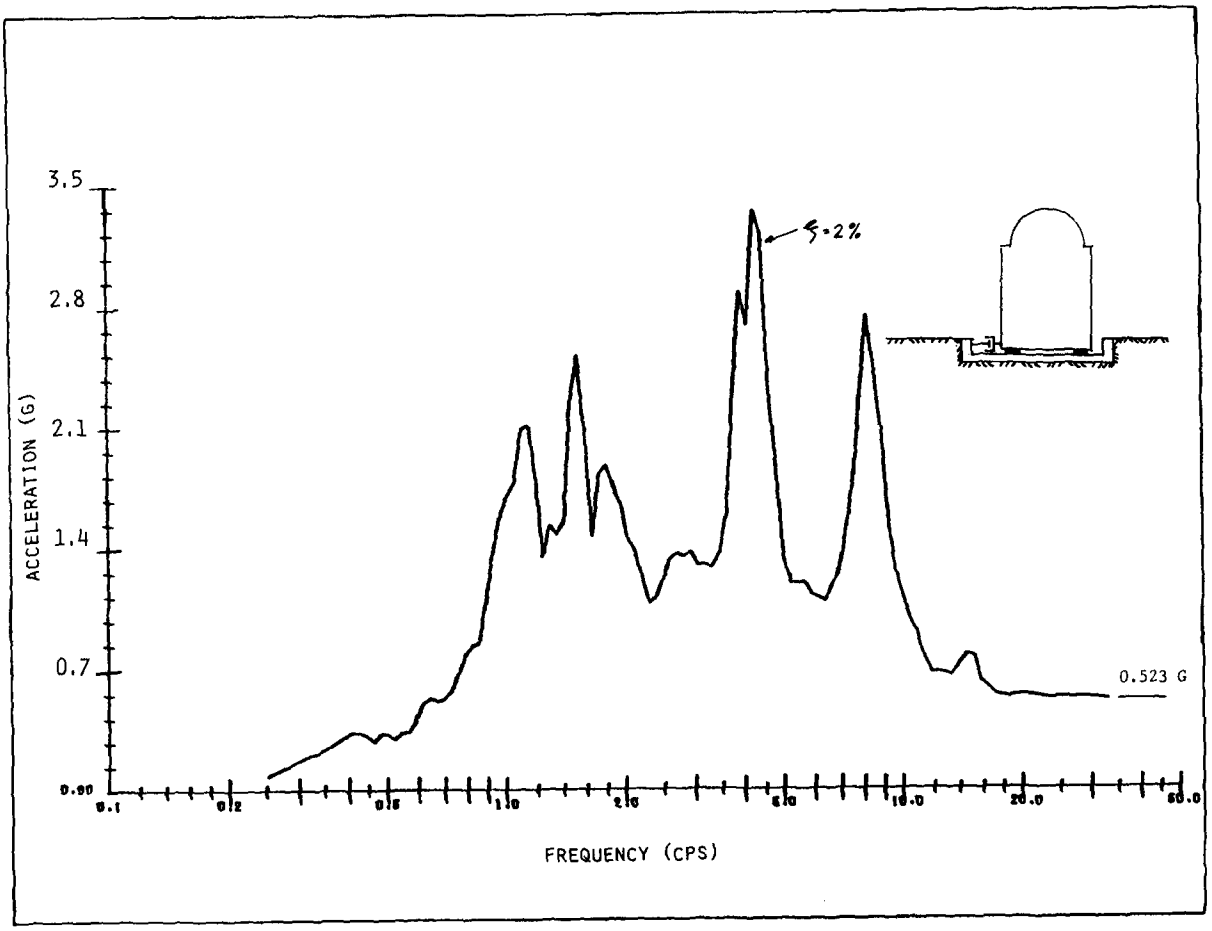

EL CENTRO
- EA FOUNDATION
- 3RD FLOOR RESPONSE SPECTRA
- RESPONSE PEAK = 0.523 G
- SPECTRAL PEAK = 3.4 G

Fig. 18. Floor spectra, EA foundation.

earthquake had recorded 1.29*g* peak motions. (Much debate took place that this was due to near field amplification effects, etc.) And again in 1979, near El Centro, many traces of 1*g* peak acceleration were recorded, for only a medium size (less than Richter magnitude 6) tremblor.

Thus, risk enters nuclear plant design due to our lack of precise knowledge of fault location, type of response spectra a fault is capable of producing, and intensity of zero period acceleration expected from a given fault.

Exactly in which direction geological and seismic risk science is taking us is hard to predict. We can say, however, with good certainty, that any new nuclear plant sited in California, or any other seismically active location, will receive tremendous scrutiny when it is designed for seismic motions. And the trend is to larger and larger SSE spectra, thus implying larger and larger seismic risk, design fees, etc.

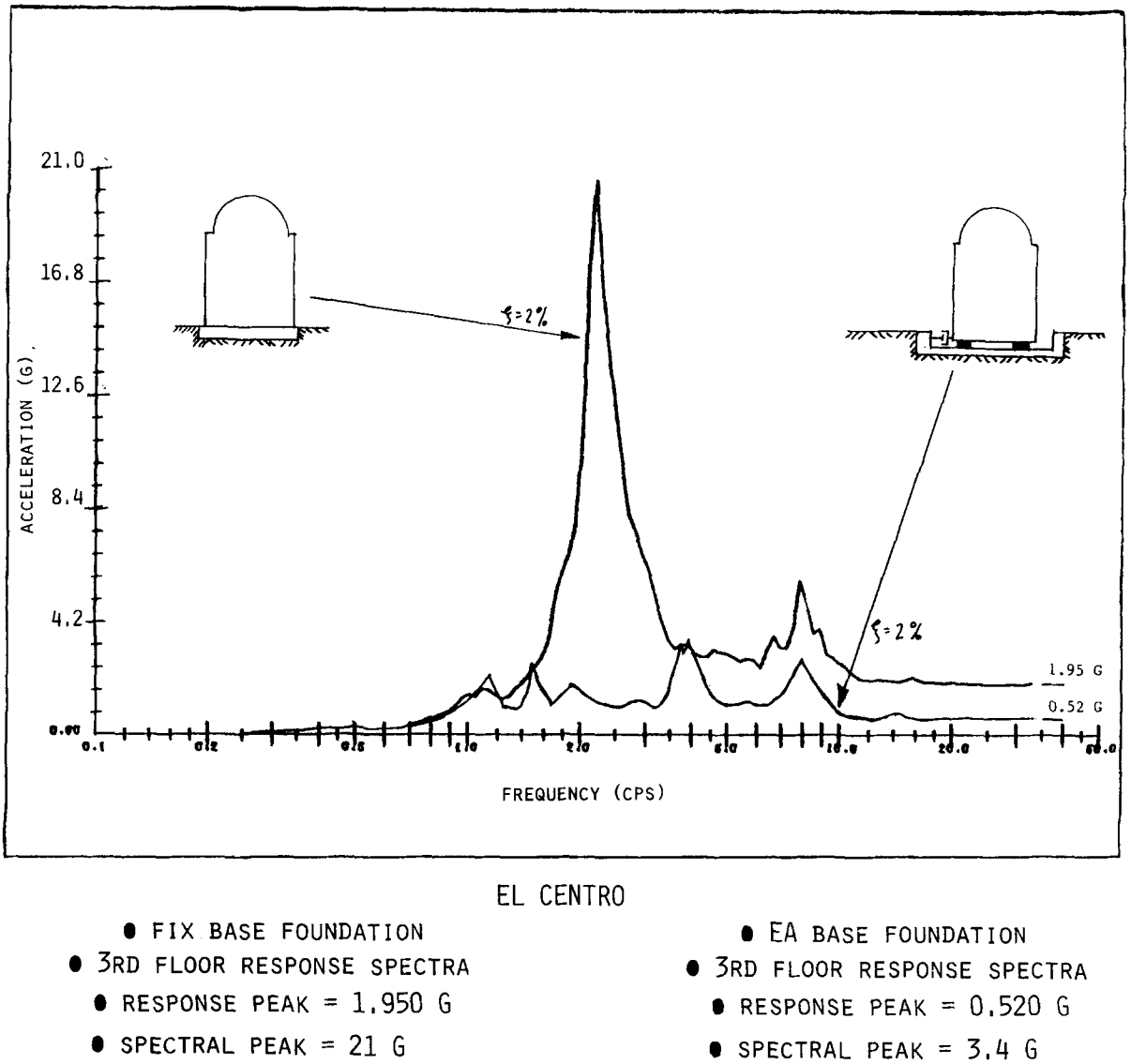

Fig. 19. Floor spectra, FIX versus EA foundation.

Can this seismic risk be controlled? By using the seismic isolation design concept, it can. To recapitulate: the isolation system reduces, by a factor of 2 to 3 or more, the seismic design loads and floor spectra for the nuclear plant. A site having a 0.80g SSE spectra would only require a plant design to a more reasonable "equivalent" 0.40g (or less) spectra. Thus, seismic isolation systems "control" the risk in the following ways:

(1) Reduce seismic input to the nuclear plant.
(2) Reduce building shears, moments.
(3) Reduce floor response spectra.
(4) Reduce impact from locating near field faults after plant construction has started.

5. Conclusion

Seismic isolation of buildings is a concept which has had much discussion in the engineering community. For all this discussion, there are very few actual applications in the United States.

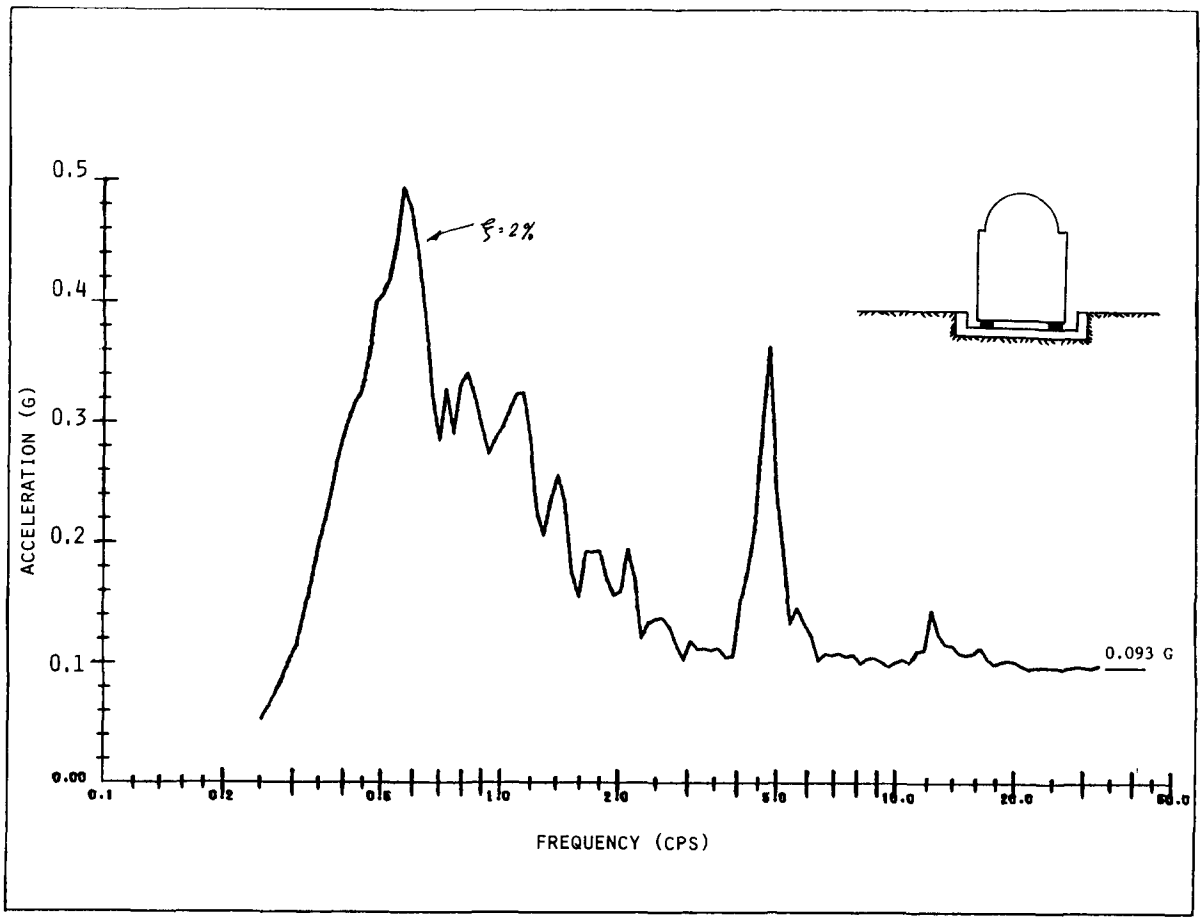

EL CENTRO
- SIMPLE RUBBER FOUNDATION
- 3RD FLOOR RESPONSE SPECTRA
- RESPONSE PEAK = 0.093 G
- SPECTRAL PEAK = 0.5 G

Fig. 20. Floor spectra, simple foundation.

In this report, we have looked at this situation in light of nuclear power plant applications. We covered many facets of the issue, both technical and non-technical.

Designing a nuclear plant, or any other structure, on an isolation system is merited based upon many aspects, aside from the strictly technical aspects. To summarize these aspects:

Historical

There are a growing number of applications, worldwide, since the mid 1970s.

Cost

The design of lower cost Standardized nuclear power plants in high seismic regions is feasible by controlling seismic input via an isolation system.

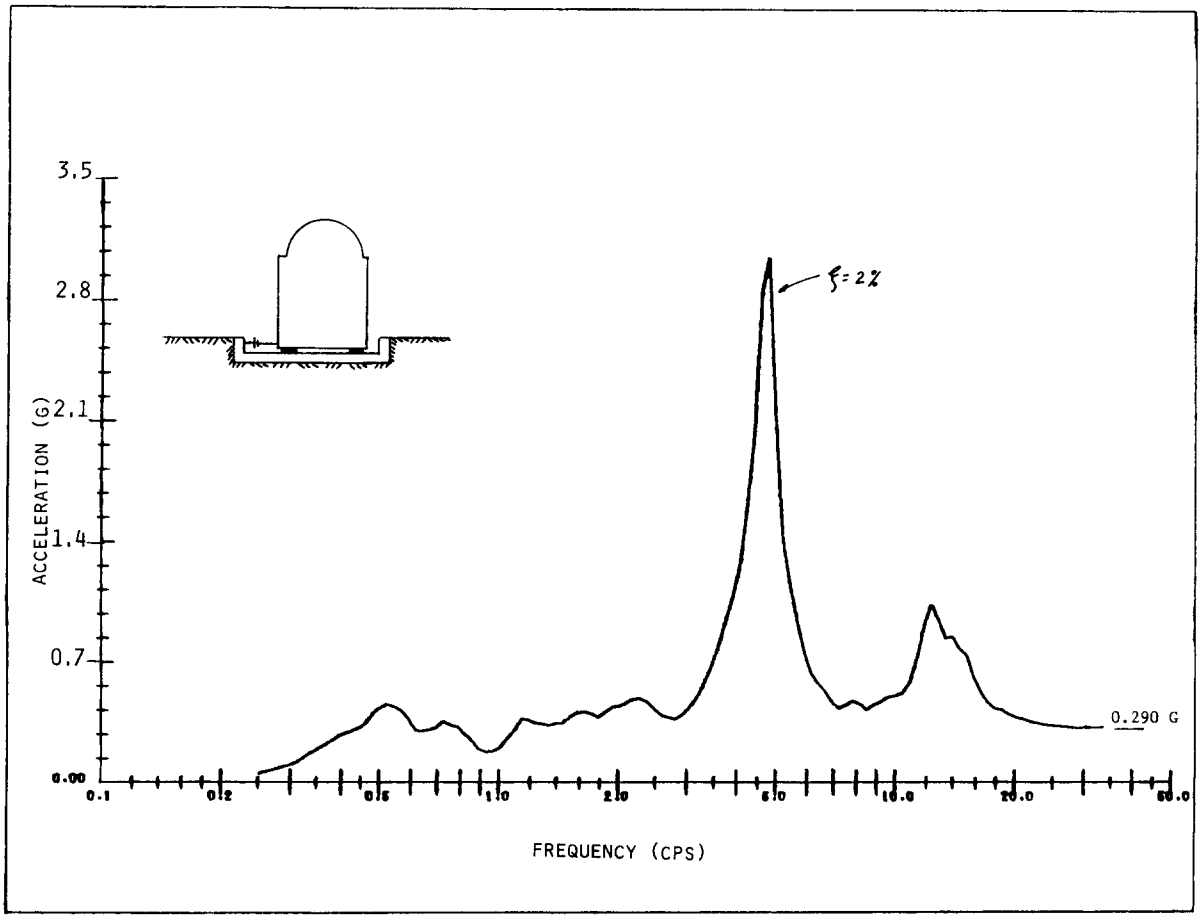

EL CENTRO
- SHEAR PIN WIND RESTRAINT FOUNDATION
- 3RD FLOOR RESPONSE SPECTRA
- RESPONSE PEAK = 0.290 G
- SPECTRAL PEAK = 3.1 G

Fig. 21. Floor spectra, shear pin foundation.

Licensing

An isolation system can control seismic risk for a nuclear plant. This can reduce time to license a plant while achieving greater safety to the public.

Technical

Building loads are reduced by factors of 2 to 3. Floor response spectra can be dramatically reduced. Equipment (piping, mechanical, electrical) in nuclear plants can be more easily designed.

In the United States, where new nuclear plants are not expected to be ordered until the 1990s, seismic isolation can still be a useful engineering tool for the export market and retrofit applications.

References

[1] J.M. Kelly, The development of base isolation for the seismic protection of structures, Emerging Technology Conf. Century 2, sponsored by ASME PVP Technology Conf., August 10–21, 1980, San Francisco, Report No. EERC 81-01 (January, 1981).

[2] R.I. Skinner, The performance of flexibly mounted equipment and structures during earthquakes, EERC 81-01 (January, 1981).

[3] J.M. Kelly, Aseismic base isolation, Proc. Second US National Conf. on Earthquake Engineering, Stanford University, Stanford, California (1979).

[4] J.M. Kelly, Testing of a natural rubber base isolation system by an explosively simulated earthquake, EERC 80-25 (1980).

[5] J.M. Kelly and M.S. Skinner, The design of steel energy absorbing restrainers and their incorporation into nuclear power plants for enhanced safety: Volume 4 – A Review of Energy Absorbing Devices, EERC 79-10 (1979).

[6] P.N. Spencer, V.F. Zackay and E.R. Parker, The design of steel energy absorbing restrainers and their incorporation into nuclear power plants for enhanced safety: Volume 1 – Summary Report, EERC 79-07 (1979).

[7] Regulatory Guide 1.60 – Design response spectra for seismic design of nuclear power plants, Revision 1, US Nuclear Regulatory Commission, Office of Standards Development (December, 1973).

[8] G.C. Delfosse, The GAPEC system; a new highly effective aseismic design, Centre National de la Recherche Scientifique, France (1975).

[9] C.J. Derham and A.P. Plunkett, Fire resistence of steel-laminated natural rubber bearings, Natural Rubber Technology, Vol. 7, Part 2 (1976).

[10] J.H.A. Crockett, Recent developments in spring insulated buildings, Natural Rubber Producers' Research Association 3rd Rubber in Engineering Conf., Imperial College of Science and Technology, London (1973).

[11] IEEE 344-1975, IEEE Recommended Practices for Seismic Qualification of Class 1E Equipment for Nuclear Power Generating Stations. The Institute of Electrical and Electronics Engineers, 1975).

[12] R.W. Clough and J. Penzien, Dynamics of Structures (McGraw Hill, New York, 1975).

[13] J.M. Kelly, J.M. Eidinger and C.J. Derham, A practical soft story earthquake isolation system, EERC 77-27 (1977).

[14] J.M. Eidinger and J.M. Kelly, Experimental results of an earthquake isolation system using natural rubber bearings, EERC 78-03 (1978).

[15] J.L. Sackman and J.M. Kelly, Rational design methods for light equipment in structures subjected to ground motion, EERC 78-19 (1979).

[16] J.M. Kelly and D.E. Chitty, Testing of a wind restraint for aseismic base isolation, EERC 78-20 (1978).

[17] R.D. Wheaton and R.M. Polivka, Uniform probability response spectra for a site near the San Andreas Fault, 7th World Conf. on Earthquake Engineering, Turkey (1980).