DEPT OF BLDGS121193181 Job Number
ES844986086 Scan Code

GEOTECHNICAL ENGINEERING REPORT

for

RIVERSIDE CENTER BUILDING 1
NEW YORK, NEW YORK

Prepared For:

GID Development
125 High Street, 27th floor
Boston, MA 02110

Prepared By:

Langan Engineering, Environmental, Surveying and Landscape Architecture, D.P.C.
21 Penn Plaza
360 West 31st Street, 8th Floor
New York, New York 10001

Jared Green, P.E.
Professional Engineer License No. 085383

Alan R. Poeppel, P.E.
Professional Engineer License No. 080220

February 20 2015
170275401

TABLE OF CONTENTS

INTRODUCTION 1
SITE DESCRIPTION 1
EXISTING STRUCTURES AND UTILITIES 2
Relieving Platform at West 61st Street 2
Riverside Center Building 2 3
West Side Highway and Riverside Boulevard 3
Utilities 3
SITE DEVELOPMENT HISTORY 3
LOCAL GEOLOGY 4
FEMA Flood Maps 5
PROPOSED CONSTRUCTION 5
SUBSURFACE INVESTIGATION 6
Test Borings 6
Cone Penetration Testing and Seismic Cone Penetration Testing 7
Previous Subsurface Investigations and Borings by Others 8
LABORATORY TESTING 8
SUBSURFACE CONDITIONS 8
Uncontrolled Fill [Class 7] 9
Clay [Class 4b, Class 6] 9
Silt [Class 5b, 6] 10
Sand [Class 3b] 10
Weathered Decomposed Bedrock [Class 1d] 11
Bedrock [Classes 1a – 1c] 11
Groundwater 12
SEISMIC DESIGN PARAMETERS 12
FOUNDATION RECOMMENDATIONS 13
Shallow Foundations 13
Deep Foundations 14
Index Piles and Load Tests 16
Permanent Tie-down Anchors 17
OTHER GEOTECHNICAL RECOMMENDATIONS 17

Permanent Groundwater Control 18
Cellar Slab 19
Permanent Below-Grade Walls 19
Utility Support 19
SITE PREPARATION AND GENERAL CONSTRUCTION RECOMMENDATIONS 19
Excavation 20
Temporary Support of Excavation 20
Temporary Groundwater Control (During Construction) 21
Fill Materials, Placement, and Compaction 21
Preconstruction Conditions Documentation and Monitoring 22
SERVICES DURING DESIGN, CONSTRUCTION DOCUMENTS, AND CONSTRUCTION QUALITY ASSURANCE 22
OWNER AND CONTRACTOR RESPONSIBILITIES 23
LIMITATIONS 24

DRAWINGS

Drawing No. 1 ..... Site Location Map
Drawing No. 2 ..... Historical Site Map (1860 Buckhout)
Drawing No. 3 ..... Historical Site Map (1865 Viele)
Drawing No. 4 ..... Historical Site Map (1879 Bromley)
Drawing No. 5 ..... Geologic Map
Drawing No. 6 ..... Preliminary Flood Insurance Rate Map
Drawing No. 7 ..... Subsurface Investigation Plan
Drawing No. 8 ..... Estimated Top of Rock Elevation Plan
Drawing No. 9 ..... Subsurface Profiles A-A' and B-B'
Drawing No. 10 ..... Subsurface Profiles C-C' and D-D'
Drawing No. 11A ..... Lateral Earth Pressure Diagram
Drawing No. 11B ..... Lateral Earth Pressure Diagram

APPENDICES

Appendix A ..... Historic Boring Information
Appendix B ..... Relieving Platform Documents
Appendix C ..... Langan Boring and Well Construction Logs
Appendix D ..... Cone Penetrometer Test Results
Appendix E ..... Laboratory Testing Results
Appendix F ..... Site-Specific Seismic Study

INTRODUCTION

This report presents our geotechnical engineering evaluation and report for the proposed Riverside Center Building 1 of the Riverside Center development project at Block 1171, Lots 154 and 156 in Manhattan, N.Y. The report summarizes the results of our subsurface investigation and presents our geotechnical recommendations related to foundation design and construction of the proposed development. Specific recommendations include seismic parameters, foundation system and allowable capacities, settlement ranges, permanent control of groundwater, applied earth loads on the floor slabs and the foundation walls, and excavation issues.

All services were performed in general accordance with our revised proposal, dated 15 December 2014. Our understanding of the project, building layout, and structural systems is based on drawings provided by the project structural engineer (WSP Building Structures – WSP) and project architect (GHWA Architects, LLP – GHWA). Analyses and recommendations presented in this document are in accordance with the New York City Building Code 2014 (Building Code).

All elevations presented herein are referenced to the North American Vertical Datum of 1988 (NAVD88) and were obtained from a Topographical Boundary and Utility Survey, prepared by Langan, dated 21 January 2015.

SITE DESCRIPTION

The Riverside Center development is located on the West Side of Midtown Manhattan and is bordered by West 61st Street to the north, West End Avenue on the east, West 59th Street to the south and West Side Highway and Riverside Drive to the west. A site location map is included as Drawing No. 1.

The project proposes to develop the parcel on the northwest corner of New York City Block 1171, Lots 154 and 156. The site has a footprint area of about 92,900 square feet, with a frontage of about 420 feet along West 61st Street to the north, 210 feet along Freedom Place (under construction) to the east, and about 220 feet along the West Side Highway and Riverside Boulevard easement to the west.

The site is currently used for field offices and storage for the Riverside Center development. The field offices lie on the western part of the site. Building materials and equipment for Riverside Center Building 2, under construction to the east, lie on the eastern part of the site. At the center of the site, a stockpile of excavated material from Riverside Center Buildings K1

and K2 (under construction, located to the north of the site, Block 1171, Lot 150) exists. The stockpile is about 300 feet wide in the east-west direction, 160 feet wide in the north-south direction, and about 15 feet high. Elevations on top of the stockpile range between 27 and 33. Elevations around the perimeter site range between 8 and 18. Sidewalk elevations range between about 8 and 9 (sloping from south to north) along the Riverside Drive and from about 28 and 30.5 (sloping from east to west) along West 61st Street.

EXISTING STRUCTURES AND UTILITIES

The following sections briefly discuss the existing buildings and pertinent existing site improvements in proximity to the proposed development.

Relieving Platform at West 61st Street

The one-block extension of West 61st Street from Freedom Place to Riverside Boulevard was recently completed to the north of the site. The street structure consists of an embankment laterally braced by a soldier pile and lagging system, over a pile-supported relieving platform, according to the record shop drawing, *Retaining Wall Along 61st Street* drawing *SOE-100.01* dated 14 December, 2012, prepared by the City of New York DOT, Division of Bridges. The platform is about 3-foot-thick and the bottom of platform is at about el 8.2. The platform extends laterally to Riverside Center Building 2 property line. The type of pile element and bearing capacity is not indicated on the drawing. Records were not available for review at the time of this report to confirm the actual locations or lengths of the existing foundations.

A soldier pile and lagging retaining structure was installed after the construction of the relieving platform. The retaining wall consists of a soldier pile and lagging system of HP12x74 (Grade 50) spaced 8 feet on center. One tier of tie-rods is installed at 16-foot spacing. The tie-rods are inclined at a 45 degree angle and are at about elevation 23.1. The tie-rods consists of a 1-7/8–inch-diameter SAS bar with a design load of about 73 kips, according to record shop drawing, *Retaining Wall Along 61st Street* drawing *SOE-200.01* dated 14 December, 2012, prepared by the City of New York DOT, Division of Bridges. The anchor of the tie-rod was installed within the form work of the platform prior to the placement of concrete. The anchor has a minimum stick out of about 8 inches and is followed by a coupler for the remaining bar to be installed to the face of the wall. The face of the wall is 5 feet north of Riverside Center Buildings 1 and 2 property line. Drawings showing the relieving platform and support structures are included in Appendix B.

Riverside Center Building 2

Directly east of the project site is Riverside Center Building 2 (17-29 West End Avenue). This site is under construction. The construction consists of a new 42-story mixed-use educational, residential and commercial building with a footprint area of about 50,000 square feet. According to structural drawings prepared by WSP Cantor Seinuk (dated 4 October 2013), the building is supported on piers, piles, and caissons bearing on rock. The cellar for Riverside Center Building 2 extends under Freedom Place up to the Building 1 property line. The cellar top of slab is at about el 5.5. Pile caps along the property line extend to about el 1.5.

A support-of-excavation system consisting of soldier-pipe piles, timber lagging and tiebacks was constructed within Riverside Center Building 1 site, about 3 to 4 feet west of the shared property line.

West Side Highway and Riverside Boulevard

The Riverside Boulevard easement borders the site to the west. The West Side Highway is an elevated roadway between approximately 40 and 100 feet to the west of the site. According to drawings ST-1 through ST-4, prepared by The RBA Group (dated 15 September, 2014), a temporary access road along the Riverside Boulevard easement will be constructed over approximately 15 feet of fill to match elevations to the north of the site. Pile-supported sewers and steam line are shown within the fill; a relieving platform is shown below the fill. Additionally, a ramp connecting Riverside Boulevard to the West Side Highway is proposed. It is anticipated that the construction of the sewers will begin concurrently with construction of Riverside Center Building 1.

Utilities

Along West 61st Street to the north of the site, sanitary and storm sewers, electric lines, gas lines, and water lines are located within the road embankment. Actual utility elevations are unknown at the time of this report. To the west, pile-supported sewers are proposed within the fill.

SITE DEVELOPMENT HISTORY

We have reviewed several historical maps to identify potential construction impacts. The maps indicate that the three development sites have undergone several cycles of development Historical maps depicting the site conditions circa 1865, 1860, and 1879 are attached as Drawing Nos. 2 through 4, respectively.

According to "Sanitary & Topographical Map of the City and Island of New York" published in 1865, the proposed building will be situated outboard of the original 17th century shoreline within land reclaimed from the Hudson River. The 1860 Buckhout Map shows an engineered edge on the south side of the site (West 60th Street extend). Our conclusion is that the greatest risk for timber cribbing and bulkheads is on the south perimeter of the site. Additional waterfront structures may be present within the site.

In addition, the site was occupied by railroad tracks that were part of the larger Union Stock Yard and Market Company and N.Y. Central System R.R. Rail Yard from as early as 1879 and through 1951. The site was later occupied at different times by a stockyard, lumber yard and parking lot.

LOCAL GEOLOGY

The site is on Manhattan Island, within the south terminus of the Manhattan Prong of the New England Upland province. Bedrock in the vicinity of the site generally consists of schist, amphibolite, serpentinite, granite, and pegmatite overlain by glacial and fluvial soil, and extensive fill. Although urban development has altered the original topography, typically within Manhattan the topography mimics the contours of the underlying bedrock. According to Baskerville (1994), bedrock stratigraphy in the vicinity of the site is part of the Hartland Formation and serpentinite, with rock of the Lower Cambrian age (about 500 to 520 million years ago) to Middle Ordovician age (about 461 to 472 million years ago) and intrusive rock presumably of the Silurian age (about 417 to 443 million years ago), consisting of granite and megacrystalline pegmatite. The geologic map for the site is included as Drawing No. 8. A large sill of intrusive granite is mapped south of the site from West 50th to West 51th Street. Boundaries between the intrusive granite and schist are not well-defined within the literature as evidenced by intrusive units observed in rock cores throughout the area.

The following list offers generalized descriptions of rocks mapped in the vicinity of the site:

- Hartland Formation – Interbedded units of (1) gray, fine-grained quartz-feldspar granulite containing minor biotite and garnet; (2) fine- to coarse-grained, gray to tan weathering, quartz-feldspar-muscovite-biotite-garnet schist (mica schist); and (3) dark greenish-black quartz-biotite-hornblende amphibolite. Intrusions of granite and pegmatite are common (Baskerville 1994). Foliation is typically oriented either northwest or southeast and dips steeply within Manhattan, as discussed by Baskerville, but may be altered locally as a result of folding.

- Serpentinite – Very dark green to light green serpentinite. The darker rock is magnetic and contains magnetite, chromite, actinolite, and traces of olivine. The lighter colored rock is generally the weathered near-surface part of the rock mass. The rock may be massive or highly fractured and is associated with the surrounding Hartland Formation.
- Granite and Pegmatite – Gray-white-pink medium- to coarse-grained, biotite-muscovite-microcline-quartz granite and megacrystalline pegmatite in dikes less than 3 feet thick and sills greater than 3 feet thick. Accessory minerals include tourmaline, pyrite, garnet, and epidote. A thick sill cuts across the rock of the Hartland Formation as shown in Drawing No. 5.

FEMA Flood Maps

In December 2013, FEMA released preliminary Flood Insurance Rate Maps (FIRM), which incorporate updated flood-hazard models. Select panels were further updated in January 2015 to reflect revised models. However, the parcel for the Riverside site was not updated; therefore the 2013 map applies. Effective January 2014, local law 96/2013 from the New York City Department of Buildings (DOB) allows the base flood elevation to be designated from the worst case of the FEMA FIRM 2007 or preliminary FIRM. The preliminary FIRM panel for the Riverside site indicates the site is within the limits of Flood Hazard Zone AE, "areas of inundation by the 1 percent annual chance flood (100-year flood)," which has a corresponding Base Flood Elevation (BFE) of about el 11. The preliminary FIRM is shown in Drawing No. 6.

PROPOSED CONSTRUCTION

The proposed construction consists of a two-tower structure with one podium connecting the towers below the 12th floor. The western tower will be 39 stories with an overall height of about 460 feet, and the eastern tower will be 27 stories with an overall height of about 300 feet. Both structures will be house residential units above the first floor, which will provide a lobby and retail space in each tower. The structure will have a cellar and subcellar level, each with a footprint of about 92,000 square feet. The subcellar is anticipated to have a finished-floor elevation of about el 2.5.

A pool is proposed at the southwest corner of the site. The top of the pool slab is proposed to be at about el 1. Utilities are proposed to be housed below the pool and the excavation is anticipated to extend to about el -3.5. The western and eastern tower shear wall cores are proposed to be on 7-foot-thick concrete caps supported by deep foundation elements. The elevator pits at the cores extend to about el -13 to el -16.

Limited structural information was available at the time of this report. The structure will be constructed with cast-in-place concrete floors and reinforced concrete columns and shear walls. We have based our recommendations on a total building load of 300 pounds per gross square foot, a lateral base shear of 3 percent of the gravity load, and a hydrostatic uplift head of 11 feet acting on the underside of the subcellar slab.

SUBSURFACE INVESTIGATION

A set of geotechnical test borings was performed between 16 December 2014 and 2 January 2015 to evaluate the subsurface conditions within the footprint of Riverside Center Building 1. Our investigation included (1) drilling borings with insitu testing- and sampling- of soil and rock; (2) performing cone penetration tests and seismic cone penetration tests (CPT/SCPT); (3) testing recovered soil samples in a laboratory; and (4) reviewing available historical boring data. A brief summary of the investigation follows.

Test Borings

Twenty-nine borings (LB-1 through LB-25, and LB-27 through LB-30) were drilled within the vicinity and footprint of Riverside Center Building 1. In addition, seven cone penetration test (CPT) were predrilled through existing fill soils to bypass potential obstructions. The borings and CPT locations were drilled by Warren George Inc. of Jersey City, New Jersey, between 16 December 2014 and 2 January 2015. All drilling was performed under the full-time special inspection of Langan geotechnical engineers. A plan depicting the locations of the borings and SCPTs is attached as Drawing No. 7.

The inferred borings LB-13, LB-16, LB-21, LB-25 and LB-28 were drilled to rock top. The other twenty-four borings were drilled at least 10 feet into rock to retrieve rock cores and evaluate rock quality. The SCPT locations were drilled through existing fill soils to depths varying between about 15 and 20 feet below existing grade.

The borings and CPT locations were advanced through soil overburden using mud-rotary drilling techniques with tri-cone roller bits, and a bentonite and water drilling fluid. Temporary flush-joint steel casing was installed through fill and native overburden soils, as required, to stabilize the boreholes and prevent fluid loss during drilling.

The Standard Penetration Test (SPT)[1] was performed in general accordance with ASTM D1586. Penetration values (N-values)[2] and visual soil classifications were recorded by Langan's inspecting engineers. Extra SPT tests and samples were obtained through loose and soft materials. Soils were sampled using a standard 2-inch-diameter split-spoon sampler. In addition, undisturbed thin-walled tube samples were obtained from soft silt-clay soils in accordance with ASTM D1587; 13 undisturbed samples were recovered from 14 attempts. Rock was cored in 24 borings in accordance with ASTM D2113 to assist in determining bedrock depth, type, and quality. All soil and rock samples were visually examined and classified in the field in accordance with ASTM D2487 and the Building Code. Rock core recovery (REC)[3] and rock-quality designation (RQD)[4] were also logged in the field by our inspecting engineers.

Groundwater monitoring wells were installed as part of a Langan environmental investigation of the site. Aquifer Drilling and Testing installed six permanent and three temporary groundwater wells at the site. Permanent wells were capped and a flush-mount cover was concreted at the ground surface. The locations of the permanent wells are shown in Drawing No. 7.

Copies of the test boring logs are attached as Appendix C.

Cone Penetration Testing and Seismic Cone Penetration Testing

Seven cone penetration tests (CPT) were attempted as part of our investigation. Shear-wave velocity measurements were taken at three of the cone penetration tests (SCPT). The SCPT locations are denoted as SCPT-1, SCPT-2 and SCPT-5. The CPT locations were predrilled through existing fill soils and backfilled with sand to bypass potential obstructions. The SCPTs were pushed to depths ranging from about 34 feet to about 49 feet below existing grade.

All cone penetration testing was performed in accordance with ASTM D5778 by ConeTec, Inc. of West Berlin, New Jersey, on 10 January 2015. Cone penetration testing consists of pushing an instrumented stainless steel cone through soil overburden using hydraulic pressure, while continuously collecting data. Field data including cone penetration tip resistance, side friction, pore water pressure, and shear-wave velocities are recorded by ConeTec during the testing. Seismic testing to measure shear-wave velocity (V_s) was performed at about 3.25-foot intervals and consisted of generating vibrations at the ground surface and recording seismic signals at a

1 The Standard Penetration Test is a measure of soil density and consistency. The testing involves driving a 2-inch OD split-spoon sampler a distance of 2-ft, using a 140-lb hammer free falling from a height of 30-inches.
2 N-value – The number of blows required to drive a 2-inch diameter split-spoon sampler 12-inches after an initial "seating" penetration of 6-inches, using a 140-pound hammer falling freely from a drop height of 30-inches.
3 Rock core recovery (REC) is defined as the length of all core pieces recovered divided by the total core run length.
4 Rock Quality Designation (RQD) is defined as the sum of all recovered sound rock core pieces measuring 4-inches or more in length (for type NX, NQ or PQ cores) divided by the total core run length. RQD is a relative indicator of rock quality.

geophone mounted within the cone apparatus. A copy of the ConeTec CPT/SCPT data is provided as Appendix D.

Previous Subsurface Investigations and Borings by Others

August 2011 Langan Investigation for Riverside Center Building 2 (17-29 West End)

Six borings were performed for the proposed Riverside Building 2, which abuts the site directly to the east. The boring location plan and logs are included in Appendix A.

Borings by Others

As part of our subsurface investigation, we also reviewed historical boring data performed in the vicinity of the proposed development. This data included borings and testing performed for the original design of the Riverside Center Building 1 (formally known as proposed Building L), Riverside Center Building 3 (formally known as proposed Building M), Building K1, Building K2, and Riverside Center Building 2 (formally known as proposed Building N). This data was reviewed to evaluate the consistency of the subsurface conditions observed during our field investigation. The historical data documents subsurface stratigraphy and blow counts. Copies of the historical boring logs are provided in Appendix A. In general, the subsurface conditions observed in the Langan investigation correlated well with those of historical borings.

LABORATORY TESTING

Laboratory testing listed below was performed on select soil samples to evaluate the engineering characteristics of the soils within the site and to confirm field classifications.

- Atterberg Limits Determinations – ASTM D4318 (6 tests)
- Organic Content Tests – ASTM D2974 (6 tests)
- Unconsolidated Undrained Triaxial Tests – ASTM D2850 (4 tests)
- Natural Water Content – ASTM D2216 (6 tests)

A copy of the laboratory test results are provided as Appendix E.

SUBSURFACE CONDITIONS

The subsurface conditions presented herein are based on borings performed to date by Langan and review of available historical boring data. A plan indicating the approximate top of rock at each boring is attached as Drawing No. 8. Subsurface profiles drawn in the north-south and east-west orientations of the proposed building footprint are presented in Drawing Nos. 9 and 10.

Uncontrolled Fill [Class 7][5]

A layer of uncontrolled fill is present beneath the entire footprint of the Riverside Center Building 1. The fill is generally consists of heterogeneous mixtures of sand, gravel, and silt with variable concentrations of brick-, asphalt-, and concrete- fragments. Timber was encountered at borings LB-1 through 10, LB-15, LB-18, LB-23, LB-24, LB-29 and LB-30. Timber was predominantly observed within the top portion of the fill layer and was encountered from about el 6.1 to el 17.5. Based off observations and historic maps, this is likely remnants of the railroad ties from the larger Union Stock Yard and Market Company and N.Y. Central System R.R. Rail Yard.

The fill layer extends to depths varying between about 8 and 48 feet, corresponding to elevations of between about 0 to -26 feet. The boring data indicate that the density of the fill varies from loose to very dense, as evidenced by SPT N-values that varied from 3 to greater than 100 blows per foot (bpf); however, in many instances the higher N-values can be attributed to the presence of obstructions (boulders, timber, construction debris, etc); therefore, these N-values are generally not considered a representative indicator of in situ density. Shear wave velocities recorded in this layer vared from about 516 to 899 feet per second.

The fill is generally considered to be in a loose to medium-dense condition. The fill layer is designated as Class 7 – Controlled or Uncontrolled Fill per the New York City Building Code.

Clay [Class 4b, Class 6]

A layer of clay was encountered directly below the fill layer in all borings except of LB-15. This clay layer is generally considered to be a natural soil layer that represents the former riverbed of the Hudson River. The layer predominantly consists of black to gray clay with traces of some silt, fine sand and organic matter. In some cases, the recovered timber, silt or fine sand comprised the predominant portion of the recovered sample. The timber was encountered from about el -2.7 to el -22.

The clay soil typically varies in thickness between about 2 and 35 feet. Where encountered, the top of the clay layer generally dips toward the river. The bottom of the clay layer was observed at elevations between about -3 and -43.

5 Numbers in brackets indicate classification of soil and rock materials in accordance with the New York City Building Code (2014).

SPT N-values within the clay layer generally varied from weight of hammer (WOR)[6] to 84 bpf. The higher recorded N-values can be attributed to the presence of obstructions (timber) and are not considered representative of in situ density. In general, the clay layer was observed to have SPT N-values less than 6 bpf, indicating that the stratum is very soft to soft.

Six representative samples of the clay layer were tested in a laboratory. Natural moisture contents ranged between 21 and 54 percent. Liquid Limit (LL) ranged between about 48 and 81. The Plastic Limit (PL) ranged between about 21 and 37, and the Plasticity Index (PI) ranged between 9 and 44. Organic content ranged between 1 and 5 percent. Four samples were tested for unconsolidated-undrained triaxial compressive strength (UU). The UU tests show that the undrained shear strength (s_u) of the samples varied between about 474 and 1340 pounds per square foot. Shear wave velocities in this layer varied from about 318 to 815 feet per second.

This clay layer generally is classified as CL-OL or CH-OH, and is designated as Class 6 or Class 4b per the Building Code.

Silt [Class 5b, 6]

A discontinuous thin layer of silt is present within the - clay layer throughout the site. The silt layer is generally comprised of brown to gray non-plastic silt with variable concentrations of fine sand. The silt layer varies in thickness between about 4 and 5 feet and appears at depths between about 33 and 58 feet below existing grade. The bottom of the silt layer was observed at elevations between zero and -30 feet.

SPT N-values within the silt stratum varied between weight of hammer and 17 bpf. In general, the majority of the silt layer is of soft consistency.

The silt typically is classified as ML and is designated as Class 5b or Class 6 per the Building Code.

Sand [Class 3b]

A discontinuous thin layer of brown to brown-black medium to fine sand with variable concentrations of silt is present beneath the clay at 10 of 29 boring locations. The sand layer was observed immediately below the fill layer in boring LB-15. Where encountered, the sand

6 WOH = Weight of hammer is penetration of split-spoon sampler under the static weight of a 140 lb hammer in addition to the weight of drilling rods.

layer varies in thickness between about 1 and 16 feet and appears at depths between about 28 and 53 feet below existing grade. The bottom of sand layer was observed at elevations between about -16 and -50 feet.

SPT N-values varied between 10 and 100 bpf within the sand stratum. The higher recorded N-values can be attributed to the presence of timber or boulder obstructions and are not considered representative of in situ density. In general, the sand is considered to be medium-dense with representative blow counts between 10 and 30 bpf. Shear wave velocities in this layer varied from about 951 to 1469 feet per second.

The sand layer is classified as SM and SP – silty sand to poorly graded sand and is designated as Class 3b per the Building Code.

Weathered Decomposed Bedrock [Class 1d]

A discontinuous weathered, decomposed rock was present in borings LB-1, LB-5, LB-7, LB-9, LB-10, LB-15, LB-17, LB-19, LB-20, and LB-29. The deposit maintains the grain structure of the parent bedrock but has weathered such that it breaks down to sand and silt under finger pressure. The material has no apparent unconfined strength and was readily sampled by standard penetration testing. The thickness of the weathered rock layer varied between 1 and 9 feet. The top of the stratum varies between about 36 and 60 feet below the existing grade, corresponding to elevations between about -7.5 and -50.3. Field SPT N-values in the weathered rock were greater than 100 bpf.

The weathered rock layer classified as Class 1d – soft rock/weathered rock per the Building Code.

Bedrock [Classes 1a – 1c]

Bedrock was cored in 24 borings during our study. The top of the bedrock layer was observed at depths varying between about 26 and 65 feet below existing grade, corresponding to elevations between about –55.3 and –4.1. (Note that the shallowest bedrock level did not have any decomposed rock identified). The bedrock surface is irregular in Riverside Center Building 1, but generally rises in the middle of the site and slopes downward to the west and east.

Bedrock consists of dark gray-tan mica schist with sills and dikes of granitic rock. The bedrock is typically comprised of biotite, muscovite, quartz, hornblende, plagioclase feldspar, garnet. Schist has a higher concentration of mica minerals, while granite has higher concentrations of

quartz and feldspar. The schist appears to be complexly folded, often with steeply dipping angles greater than 45 degrees from horizontal, while the granite phaneritic to porphyritic with coarse mineral grains. Weathering of the bedrock rock was variable ranging from fresh to slightly weathered. Increased weathering was often noted at contacts between schist and pegmatite and at zones of increased fracturing. Most fractures in the schist are parallel to the foliation. Fracture spacing varied from close to wide. In general, fracture spacing was observed to vary from very close to close. Some fractures in rock are filled with silty and clayey materials. The bedrock was typically moderately hard to very hard, but was observed to be softer in more weathered zones. The granite rock is usually harder than schist.

Rock core recovery (REC) varied between 43 and 100 percent for the standard NX cores. Rock-quality designations (RQD) varied between 35 and 100 percent. In general, the rock is of a competent nature with RQD values exceeding 61 percent.

The bedrock is designated as Class 1a – hard rock, 1b – medium rock, and 1c – intermediate, per the Building Code.

Groundwater

Groundwater levels were measured using a water-level indicator in the nine existing Langan environmental wells identified as MW-03, MW-10, MW-16, MW-26, MW-28, MW-35, MW-38, MW-29 and MW-62. All wells are situated within the site boundary except for MW-62, which is situated off site (Riverside Center Buildings 3 and 4). MW-26, MW-35 and MW-38 are situated in the stockpile, while the other wells are situated near the west, north, and east site boundaries. All monitoring-well locations are shown on Drawing No. 7. Groundwater was measured at elevations within the wells between 0.0 and 5.6.

SEISMIC DESIGN PARAMETERS

The project seismic design parameters were developed as part of a site-specific seismic study. The 9 February 2015 Langan site-specific seismic study is attached as Appendix F. A summary of the site-specific seismic study results is as follows:

- The project Site Class is ***E***.
- The short and 1-second-period design accelerations (S_{DS} and S_{D1}) were obtained from the project site-specific recommended design response spectrum in accordance with the Building Code and ASCE 7-10 seismic design provisions. The recommended design accelerations are as follows:

S_{DS} = 0.355 g……at period of 0.2 second

S_{D1} = 0.136 g……at period of 1.0 second

The full acceleration response spectrum is provided as Figure 10 in Appendix F.

- The Seismic Design Category for the project was determined to be ***C*** for Risk Category Groups I and II.
- There is an adequate margin of safety against soil liquefaction; liquefaction need not be considered when designing the structure.

FOUNDATION RECOMMENDATIONS

The proposed development will include two cellar levels with the lower cellar top of slab elevation at about 2.5. The bottom of slab elevation is at about 1.5. The proposed foundation level of the building is within the uncontrolled fill and above the soft clay river sediment layer. Both these deposits are not suitable for foundation support.

Two foundation types are recommended because of the sloping rock surface: (1) shallow foundations consisting of concrete piers bearing on bedrock, and (2) deep foundations consisting of either pile foundation bearing on competent bedrock or drilled caissons socketed into competent bedrock. Details of each system are presented below. This section also discusses alternatives for the transition zone between the shallow and deep rock areas.

Shallow Foundations

Concrete piers bearing on rock are recommended to support loads in areas where competent bedrock is within 7 feet of the foundation subgrade level. Bedrock that is Building Code Class 1c or better is a nominally satisfactory bearing material and is suitable to support the anticipated column loads. Refer to Drawing No. 8 for approximate location of shallow foundations. We recommend an allowable bearing capacity of 20 tons per square foot (tsf), and an inherent factor of safety of at least 3.

We recommend that individual footings have a minimum area of 9 square feet and that column footings have a minimum width of 2 feet.

<u>Subgrade Preparation</u>

For rock bearing surfaces, use compressed air to clean all rock-bearing surfaces. The rock bearing surface should be clean and dry until concrete is placed. All bearing surfaces must be level and clear of debris, standing or frozen water, and other deleterious material. Protect the

approved subgrade surface until the footing construction is completed if concrete is not placed within 24 hours. Methods of protection include sealing with lean concrete (mud-slab).

A geotechnical engineer from an accredited Special Inspection Agency must verify bearing material during the excavation, in accordance with Building Code requirements. The foundation subgrade should be inspected and approved by a professional geotechnical engineer to assure that the subgrade material is adequate to provide the recommended allowable bearing pressure.

Estimated Settlement

The estimated maximum settlement for the piers bearing on the bedrock is 0.5 inches with a maximum differential settlement between adjacent columns of 0.375 inches. The settlement will occur as the foundation load is applied.

Deep Foundations

We recommend driven piles end bearing on competent bedrock or drilled caissons socketed into competent bedrock to support loads in areas where bedrock is greater than 7 feet below the bottom of the pier/pile cap.

Driven H-Piles

The basic maximum allowable capacity given in the Building Code for piles end-bearing on bedrock is 150 tons. H-piles driven to Class 1-c (or better) rock could achieve an allowable capacity of about 150 tons per pile. To obtain the 150 ton-capacity, we recommend the use of an HP 14x89. The steel section shall conform to ASTM A572 Grade 50 (minimum F_y = 50ksi). All H-piles should be fitted with protective points, such as the Hard-Bite manufactured by Associated Pile Fitting Corp., or equivalent. The final pile-driving resistance will be determined based on the results of pile static and dynamic testing (see subsequent section). The pile contractor should submit the final selected pile size and a wave-equation analysis for the proposed pile-driving hammer assembly prior to the start of construction. The estimated pile lengths of piles bearing on Class 1-c or better rock are between about 30 and 60 feet below existing grade.

We recommend an allowable pile uplift capacity of 10 tons. The estimated spring constants for compression and tension are 400 kips/in and 175 kips/in, respectively. The estimated lateral load capacity for the 150 ton-capacity driven pile is 6 tons for the free head condition. These values should be verified in the field by load tests.

Caisson Piles - Drilled into rock

Caissons drilled into rock are a feasible alternative to H-piles. The caissons provide higher compression than driven H-piles and have significant tension capacity.

A caisson consists of an open-ended steel pipe drilled to the top of rock and an uncased rock socket. After drilling, the entire shaft is filled with concrete or grout and steel reinforcement bars or structural steel. Caissons develop axial load capacity through peripheral shear resistance between the concrete and bedrock.

We have considered a nominal 13-3/8-inch-diameter steel caisson pile socketed into rock Class 1-c or better bedrock to achieve several loading conditions. Different caisson options are summarized in Table 1 below. The rock socket should be sized using a peripheral shear resistance of 200 psi for compressive strength and 100 psi for tension strength. The Building Code does not require load tests for the caisson piles; however, each caisson must be inspected using a down-the-hole video camera.

TABLE 1 – Drilled Caisson into rock – Estimated Capacities

Casing Diameter (inches)	Socket Diameter (inches)	Axial Capacity (tons)	Uplift Capacity (tons)	Spring Constants (kip/in)		*Rock Socket Length (ft)	Reinforcement (Grade 75)
				compression	tension		
13.375	11	300	150	800	1000	11	3 - #18
		400	200	950	1200	14	4 - #18

(*) The rock socket lengths include a sacrificial 2-feet-length to account for fractures close to the top of rock.

The estimated lateral load capacity for each caisson is 5 tons for the free head condition. This value should be verified in the field by lateral load tests.

Pile Installation Issues

Obstructions including timber, brick, boulders, and historical waterfront structures may be encountered during pile installation throughout the site. Spudding or predrilling during pile driving will likely be needed to bypass the obstructions. A higher than usual pile rejection rate may result. Alternatively, the driven piles can be replaced with caissons, which can typically penetrate obstructions.

Individual piles in a pile group should be installed in a sequence so the soil surrounding the piles is not densified to the extent that other piles in the group cannot be installed properly. To satisfy this requirement, we recommend maintaining a minimum center-to-center spacing of 2.5 times the pile diameter per the Building Code, and a pile-driving sequence that starts from the middle of the pile group and proceeds toward the edge.

Pile driving may also cause previously installed piles to heave because of dilatency (volume expansion) of the dense granular soils. Thus, all piles must be surveyed immediately after installation, and all piles that have heaved more than ¼ inch must be retapped to the required level and resistance.

Index Piles and Load Tests

Compression

We recommend installing a minimum of 20 index piles within the building footprint when pile-driving begins. The index piles allow for determining pile lengths, confirming design loads, identifying unusual driving conditions, and identifying the need for spudding or predrilling to bypass obstructions. Dynamic pile-testing (Pile Driving Analyzer or PDA testing) should be performed while driving index piles to monitor driving-induced stresses in the piles and to confirm driven capacities. The pile-driving records and the PDA results will be used to select the piles to be load-tested. The index piles may be used as production piles, if properly installed.

The use of driven piles as a foundation element will require static pile-load testing in accordance with the Building Code. The load tests should be performed before installing the production piles. The compression load test must be applied in seven increments to a proof load of twice the design load, and sustained for a period of not less than 12 hours. The building footprint area of the site is about 92,900 square feet; therefore, five load tests would be required to satisfy Building Code requirements (Section 1808.4.1.1).

Tension

We recommend performing two uplift load tests on the driven piles. No load tests are required for the caissons. The load-test procedures should be in accordance with ASTM D3689-90. The proof load shall be 200 percent of the proposed design load. The load should be applied in seven increments, each loading for one hour. The proof load should be held for 12 hours. The allowed butt movement over the last hour of sustained loading is 0.01 inches.

Lateral Capacity

The Building Code allows a maximum lateral load of 1 ton per pile. For greater loads, the pile or caisson capacity must be demonstrated by lateral load tests. We recommend two lateral load test for each deep foundation element (4 lateral load test). The allowable lateral movement for the pile head is 3/8 inches at the design load, and 1 inch at twice the design load. The lateral load test should be performed in accordance with ASTM D3966-90 and the Building Code.

Estimated Settlement

We estimate the pile-cap settlements to be less than 0.5 inches plus the elastic shortening of the pile for end-bearing. Differential settlement between adjacent columns is estimated at 0.5 inches or less for end-bearing piles and should be confirmed after the results of the pile load tests are available. The majority of the settlement is expected to occur during construction as the dead weight of the structure is applied.

Permanent Tie-down Anchors

If supplemental tension capacity is required at columns or between columns, we recommend permanent tie-down anchors. Permanent tie-down anchors should consist of a steel casing advanced to the top of Class 1-c or better rock and a rock socket drilled into the rock. The steel reinforcement should consist of double corrosion-protected Dywidag or SAS threaded bars meeting ASTM A-22 requirements. Bond lengths should be designed using an allowable peripheral shear of up to 100 psi along the grout-rock interface. The free stress (unbounded) length should be at least 15 feet long.

The actual design capacity of the anchors should be evaluated once the building design loads are finalized. Ten percent of the tie-down anchors should be performance tested (creep) to 133 percent of their design load. The remaining anchors should be proof-tested to 133 percent of their design load. Successfully tested anchors should be locked off at a load exceeding the sum of the design load, seating loss, and long-term losses.

OTHER GEOTECHNICAL RECOMMENDATIONS

The following section provides our recommendations geotechnical-related design parameters including permanent groundwater control; slab support; permanent below-grade walls; and utility support.

Permanent Groundwater Control

Design Flood Elevation

Executive Order No. 203, issued by Mayor Bloomberg, dated 31 January 2013, the minimum lowest floor elevation for Structural Occupancy Category II buildings - the design flood elevation (DFE) - is equal to the base flood elevation plus 1 foot. For this site, the DFE is el 12 NAVD88.

Flood-zone requirements pertaining to the building use, occupancy, finishes, location of mechanical and electrical utilities and related service equipment are covered in Appendix G (Flood-Resistant Construction; Building Code and ASCE 24 (Flood Resistant Design and Construction). The project architect must confirm that the building design complies with these requirements.

Flood-zone insurance premiums may govern the use of a higher slab elevation or more stringent flood-zone compliance than stated herein. Flood-zone code compliance does not necessarily exempt flood-zone insurance premiums for the development.

Our recommendations are based on the current Preliminary FIRM Map, dated 5 December 2013, prepared by FEMA. While the Building Code and insurance requirements can guide design, the final selection of a Design Flood Elevation is an ownership risk-management decision weighing additional capital costs and aesthetic impact against potential loses during a flood.

Waterproofing

To limit seepage and water-vapor infiltration (through the concrete, cold joints, shrinkage cracks, and utility penetrations), we recommend that the lower slab and the foundation walls be fully waterproofed to the DFE, el 12. In addition, any building section or component (openings, doors, etc.) constructed below the floodplain should be equipped with flood barriers to prevent water infiltration.

We recommend using a membrane-type waterproofing, such as products by W.R. Grace, for below the cellar slab, pile caps and along the exterior of foundation walls to the design flood elevation. The foundation waterproofing should connect to the above grade waterproofing. The use of bentonite waterproofing or negative-side crystalline waterproofing is not recommended. For horizontal applications, we recommend that the waterproofing membrane be installed on a 2-inch concrete working surface (mud slab). For vertical applications, the foundation walls should be protected with drainage panels.

Quality control is critical to a successful waterproofing project. Careful installation, diligent protection, and close oversight are critical to produce a final product that limits the potential for seepage. We recommend that warranties be obtained from the manufacturer and installer to cover materials and workmanship. Only certified installers should be used to perform the work. Detailed inspections should be performed to document any damage resulting from the contractor's activities and any repairs performed immediately. A representative of the manufacturer should perform a final inspection of the waterproofing in coordination with the geotechnical engineer, and should approve all waterproofing work prior to concrete pours.

Cellar Slab

A slab-on-grade is not considered a feasible option for the cellar slab. The top of the lowest-level cellar slab will be at about el 2.5 and will be constructed within variable soils including uncontrolled fill and a compressible clay layer. The cellar floor slab must be designed as a structural slab and must be designed to resist a hydrostatic uplift pressures resulting from the groundwater level at the DFE of el 12.

Permanent Below-Grade Walls

Permanent below-grade walls should be designed to resist static earth pressures, surcharge loads, and hydrostatic pressures. The following scenarios should be considered: 1) sidewalk grades are above the DFE, and 2) sidewalk grades are below the DFE. Our recommended lateral earth-pressures diagrams are presented in Drawing Nos. 11A and 11B.

Dynamic lateral loads need not be considered because the site is ***SDC C*** (Building Code Section 1802.2).

Utility Support

Utilities constructed below the structural slab may be subjected to settlements caused by consolidation of the compressible and loose alluvial layers and inconsistent uncontrolled fill. Therefore, we recommend that the below-slab utilities be located in utility chases cast within the structural slab. Where the utility pipes transition from the pile-supported building to on-grade support, flexible connections should be used.

SITE PREPARATION AND GENERAL CONSTRUCTION RECOMMENDATIONS

The following sections present our recommendations related to earthwork; excavations; temporary below-grade walls; construction dewatering; special inspections; fill materials, placement, and compaction; and construction documents.

Excavation

According to the schematic design, the top of the proposed cellar level will be at about el 2.5 and the general subgrade excavation will be at about el 1. Therefore, the cellar-level construction will require a general excavation of between about 10 and 16 feet below existing grades. The excavation for the pile caps and the elevator pits will likely extend between 4.5 and 13.5 feet deeper than the cellar-level depths, respectively.

The foundation contractor must then take appropriate measures to stabilize the work area and prevent lateral movements of the adjacent areas during the foundation excavation.

Additionally, the adjacent structures to the north and east must not be undermined by the proposed excavation. Measures should be taken to prevent raveling of soil from around and beneath the adjacent structure foundation, and slab elements.

Temporary Support of Excavation

We have evaluated temporary excavation and support systems and our recommendations are provided below:

Concrete Pier "Buttons"

Temporary excavation support and earth retention would be necessary to provide lateral support for the soil and to prevent raveling of soil from beneath slab elements. The may be true along property lines where:

- Adjacent buildings are founded on pier or piles extending to bedrock, and
- Sidewalks, roads, and utilities that required lateral support but no underpinning

For these situations, we recommend that the soil be retained with a temporary excavation support system consisting of concrete pier "buttons" and timer lagging extending from the bottom of the adjacent grade or floor slab to the bottom of the excavation for the proposed building. External lateral support should be provided as necessary in the form of drilled tiebacks at each concrete pier.

Sheet Piles

An interlocking sheet pile system is a feasible option for the temporary retaining system. The sheet pile would be beneficial since the excavation extends below the water table. Sheet pile would serve as a cut off and significantly reduce temporary dewatering effort.

The contractor must evaluate that the entire temporary excavation system works; the temporary dewatering and the cost/risk factors associated with this system.

Temporary Groundwater Control (During Construction)

Based on the review of the proposed construction, temporary construction dewatering is anticipated to be limited to the pile caps and elevator pits. Groundwater was measured between el 0.0 and 5.6. Dewatering should be assumed for any excavations extending below the high groundwater table. The Contractor's dewatering system should be adequate for maintaining a "dry" subgrade during normal operating conditions.

Dewatering within the site will require permits from the New York City Department of Environmental Protection (DEP). Confirmation with the DEP should be done that the existing sewers around the site are of adequate size to handle the projected groundwater discharge volumes.

Fill Materials, Placement, and Compaction

Structural fill placed to establish the finished subgrade beneath pile caps and floor slabs or as backfill behind walls should consist of a granular material having no more than 10 percent fines passing the No. 200 sieve. All fill materials should be free of trash, debris, roots, vegetation, peat, or other deleterious materials and should be approved by the Geotechnical Engineer prior to placement. Lean concrete or controlled low strength material (CLSM) may be substituted for structural fill.

Where wet subgrades are present resulting from excavating below groundwater, we recommend that initial placement fill consist of free draining gravel or crushed stone in an effort to stabilize the subgrade. Free draining gravel or crushed stone should conform to the requirements of New York State Department of Transportation Item 605.0901, Underdrain Filter Type I or AASHTO No 57 stone.

Fill should be placed in uniform loose lifts not exceeding 8-inches in open areas and 4-inches in confined areas. All fill should be compacted to at least 92% of its maximum dry density as determined by ASTM D1557. Compaction within 5-ft of foundation walls should be performed using hand operated equipment. The water content at the time of compaction should be within a two percent of the optimum value determined by ASTM D 1557.

Fill should not be placed on subgrades not inspected and approved by the Geotechnical Engineer. All imported fill must meet standards by the Office of Environmental Remediation (OER) and the approved Remedial Action Work Plan (RAWP) requirements.

Preconstruction Conditions Documentation and Monitoring

Preconstruction-conditions documentation of the neighboring buildings should be performed. The documentation would provide the owner with documentation of the existing conditions as a baseline in the event of a future damage claim. On the basis of this documentation, an observational and instrumentation program should be designed for monitoring the performance of adjacent structures and evaluating construction procedures.

During excavation-support construction and active pile installation, an optical-survey program should be implemented to monitor for vertical and horizontal movements of surrounding structures and the excavation-support system. The survey should be performed every other week, with measurements taken to the nearest 0.005 feet. The survey should be performed by a licensed surveyor. The recommended allowable lateral movement of the perimeter walls is 3/4 inches, and the allowable ground settlement behind the wall is 3/4 inches. Work should be temporarily stopped if movements (vertical or horizontal) exceed about 1/4 inches over two readings or a movement trend develops over several readings. Criteria for allowable movements of structures should be finalized after a building's preconstruction conditions documentation is completed. The status of the excavation support system should be reviewed when the vertical or lateral movements reach one-half the threshold limits.

SERVICES DURING DESIGN, CONSTRUCTION DOCUMENTS, AND CONSTRUCTION QUALITY ASSURANCE

During final design we should consult with the design team as geotechnical questions arise. Technical specifications and design drawings should incorporate Langan's recommendations. Langan will assist the design team in preparing specification sections related to geotechnical issues such as earthwork, ground improvement, foundations, backfill and excavation support. Langan should also review the project plans, as well as contractor submissions relating to materials and construction procedures for geotechnical work, to confirm the designs incorporate the intent of our recommendations.

Langan has investigated and interpreted the site subsurface conditions and developed the foundation design recommendations contained herein, and is, therefore, best suited to perform quality-assurance observation and testing of geotechnical-related work during construction.

The work requiring quality assurance confirmation or special inspections per the Building Code includes, but is not limited to, earthwork, backfill, ground improvement, foundations, and excavation support.

Recognizing that construction observation is the final stage of geotechnical design, quality-assurance observation during construction by Langan is necessary to confirm the design assumptions and design elements, to maintain our continuity of responsibility on this project and allow us to make changes to our recommendations, as necessary. The foundation system and general geotechnical construction methods recommended herein are predicated upon Langan assisting with the final design and providing construction observation services for the owner. If Langan is not retained for these services, we cannot assume the role of geotechnical engineer of record, and the entity providing the final design and construction observation services must serve as the engineer of record

OWNER AND CONTRACTOR RESPONSIBILITIES

The contractor is responsible for construction quality control, which includes satisfactorily constructing the foundation system and any associated temporary works to achieve the design intent while not adversely impacting or causing loss of support to neighboring property, structures, utilities, roadways, etc. Construction activities that can alter the existing ground conditions such as excavation, fill placement, foundation construction, ground improvement, pile driving and drilling, dewatering, and other activities can also induce stresses, vibrations, and movements in nearby structures and utilities, and can disturb occupants. Contractors are solely responsible for ensuring that their activities will not adversely affect the structures and utilities and will not disturb occupants. Contractors must also take all necessary measures to protect the existing structures, utilities, during construction. By using this report, the owner agrees that Langan will not be held responsible for any damage to adjacent structures, utilities, etc.

The preparation and use of this report is based on the condition that the project construction contract between the owner and their contractors will include (1) Langan being added to the Project Wrap and Contractor's General Liability insurance as an additional insured, and (2) language specifically stating the foundation contractor will defend, indemnify, and hold harmless the owner and Langan against all claims related to disturbance or damage to adjacent structures, utilities, etc or properties.

LIMITATIONS

The conclusions and recommendations provided in this report result from our interpretation of the geotechnical conditions existing at the site inferred from a limited number of borings, scpt tests, and other explorations, as well as architectural and structural information provided by GHWA, and WSP. Actual subsurface conditions may vary. Recommendations provided are dependent upon one another and no recommendation should be followed independent of the others.

Any proposed changes in structures or their locations should be brought to Langan's attention as soon as possible so that we can determine whether such changes affect our recommendations. Information on subsurface strata and groundwater levels shown on the logs represent conditions encountered only at the locations indicated and at the time of investigation. If different conditions are encountered during construction, they should immediately be brought to Langan's attention for evaluation, as they may affect our recommendations.

This report has been prepared to assist the owner, architect, and structural engineer in the design process and is only applicable to the design of the specific project identified. The information in this report cannot be utilized or depended on by engineers or contractors who are involved in evaluations or designs of facilities (including underpinning, grouting, stabilization, etc.) on adjacent properties which are beyond the limits of that which is the specific subject of this report.

Environmental issues (such as obtaining or satisfying permits, or potentially contaminated soil and groundwater) are outside the scope of this study and are addressed in a separate evaluation.

DRAWINGS

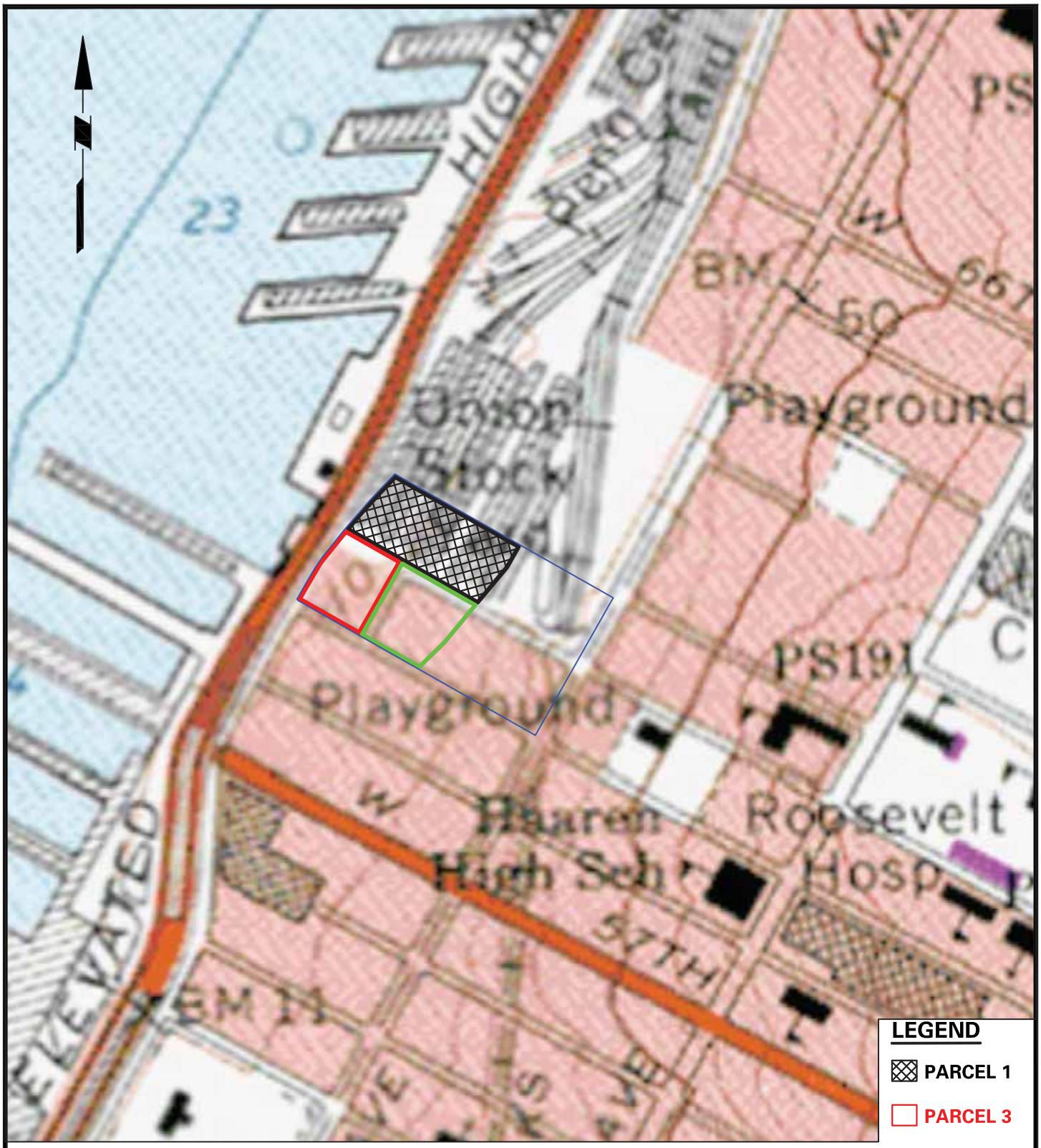

SOURCE: U.S. GEOLOGICAL SURVEY. CENTRAL PARK Quandrangle Map.1967. Photorevised 1979.

LANGAN

21 Penn Plaza, 360 West 31st Street, 8th Floor
New York, NY 10001
T: 212.479.5400 F: 212.479.5444 www.langan.com

Langan Engineering, Environmental, Surveying and Landscape Architecture, D.P.C.
Langan Engineering and Environmental Services, Inc.
Langan International LLC
Collectively known as Langan

Project

RIVERSIDE CENTER: PARCEL 1

BLOCK No. 1171, LOT No. 154 & 156
MANHATTAN
NEW YORK NEW YORK

Drawing Title

SITE LOCATION MAP

Project No. 170275401	Drawing No. 1
Date 02/20/2015	
Scale 1" = 500'	
Drawn By JSH	
Submission Date 02/20/2015	Sheet 1 of 12

© 2013 Langan

Filename: \\langan.com\data\NY\data4\170275401\cadd data - 170275401\sheetfiles\2015_ geotechnical report_r1\DWG01- Site Location Map.dwg Date: 2/20/2015 Time: 17:23 User: jhertz Style Table: Langan.stb Layout: ANSIA-BP

SOURCE: "SANITARY & TOPOGRAPHICAL MAP OF THE CITY AND ISLAND OF NEW YORK", VIELE, 1865.

500 0 250 500

SCALE IN FEET

LANGAN

21 Penn Plaza, 360 West 31st Street, 8th Floor
New York, NY 10001
T: 212.479.5400 F: 212.479.5444 www.langan.com

Langan Engineering, Environmental, Surveying and Landscape Architecture, D.P.C.
Langan Engineering and Environmental Services, Inc.
Langan International LLC

Collectively known as Langan

Project

RIVERSIDE CENTER: PARCEL 1

BLOCK No. 1171, LOT No. 154 & 156
MANHATTAN
NEW YORK NEW YORK

Drawing Title

HISTORICAL SITE MAP (1865 VIELE)

Project No. 170275401	Drawing No. 2
Date 02/20/2015	
Scale 1" = 500'	
Drawn By JSH	
Submission Date 02/20/2015	Sheet 2 of 12

© 2013 Langan

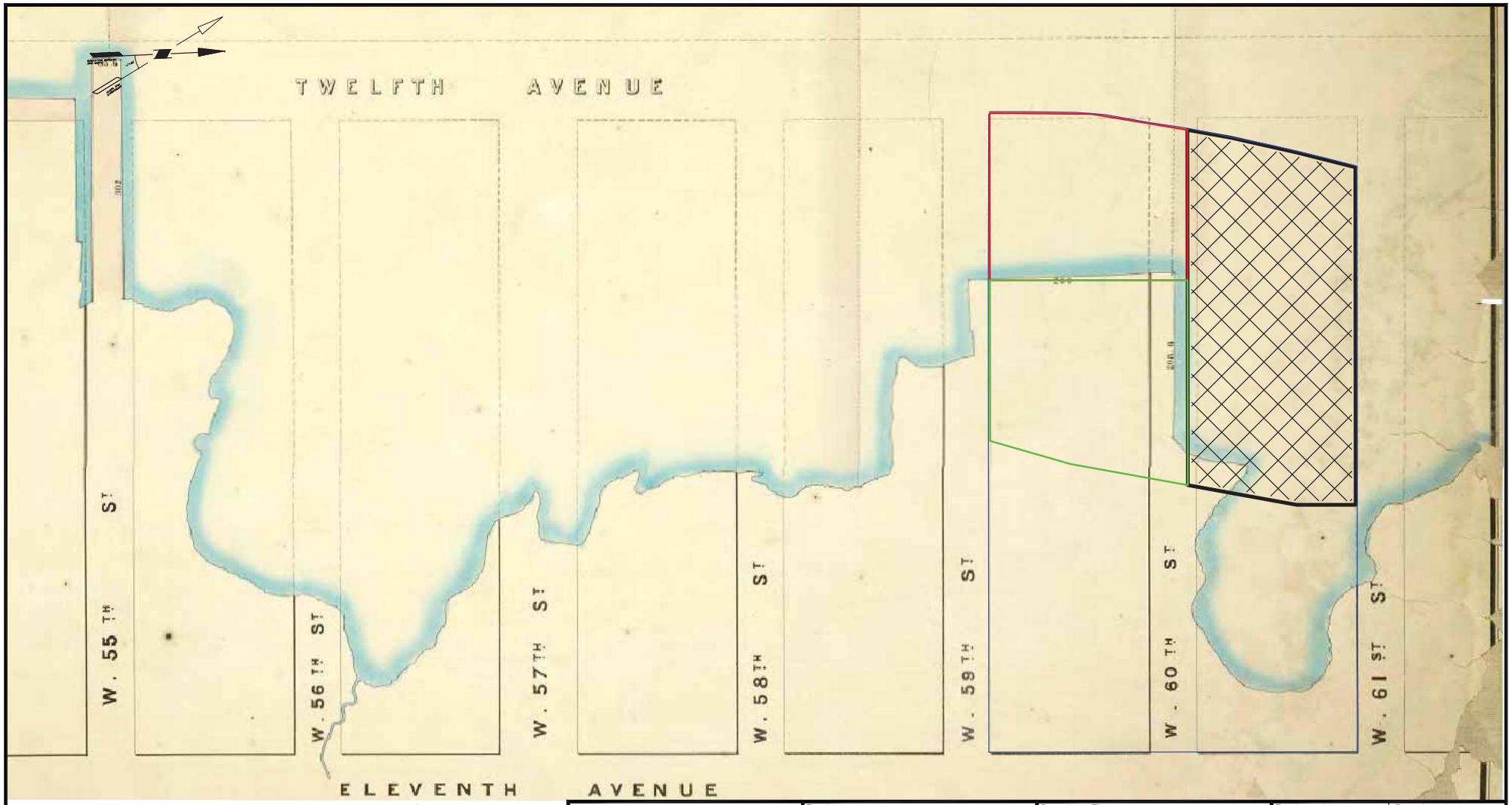

REFERENCE:
ATLASES OF NEW YORK CITY, MAPS OF THE WHARVES & PIERS FROM THE BATTERY TO 61ST STREET ON THE HUDSON RIVER AND FROM THE BATTERY TO 41ST STREET ON THE EAST RIVER, NEW YORK. SURVEYED BY I.C. BUCKHOUT, CITY SURVEYOR, 1860

LEGEND

- PARCEL 1
- PARCEL 3
- PARCEL 4

LANGAN
21 Penn Plaza, 360 West 31st Street, 8th Floor
New York, NY 10001
T: 212.479.5400 F: 212.479.5444 www.langan.com
Langan Engineering, Environmental, Surveying and Landscape Architecture, D.P.C.
Langan Engineering and Environmental Services, Inc.
Langan CT, Inc.
Langan International LLC
Collectively known as Langan

Project
RIVERSIDE CENTER: BUILDING 1
BLOCK No. 1171 LOT No. 154 & 156
MANHATTAN
NEW YORK NEW YORK

Drawing Title
HISTORICAL SITE MAP (1860 BUCKHOUT)

Project No. 170275401	Drawing No. 3
Date 02/20/2015	
Scale N.T.S	
Drawn By JSH / Checked By JD/JMG	
Submission Date 02/20/2015	Sheet 3 of 12

© 2014 Langan

Filename: \\langan.com\data\NY\data4\170275401\cadd data - 170275401\sheetfiles\2015_ geotechnical report_r1\DWG03-06-07- Historic Site Maps.dwg Date: 2/20/2015 Time: 17:23 User: jhertz Style Table: Langan.stb Layout: DWG03

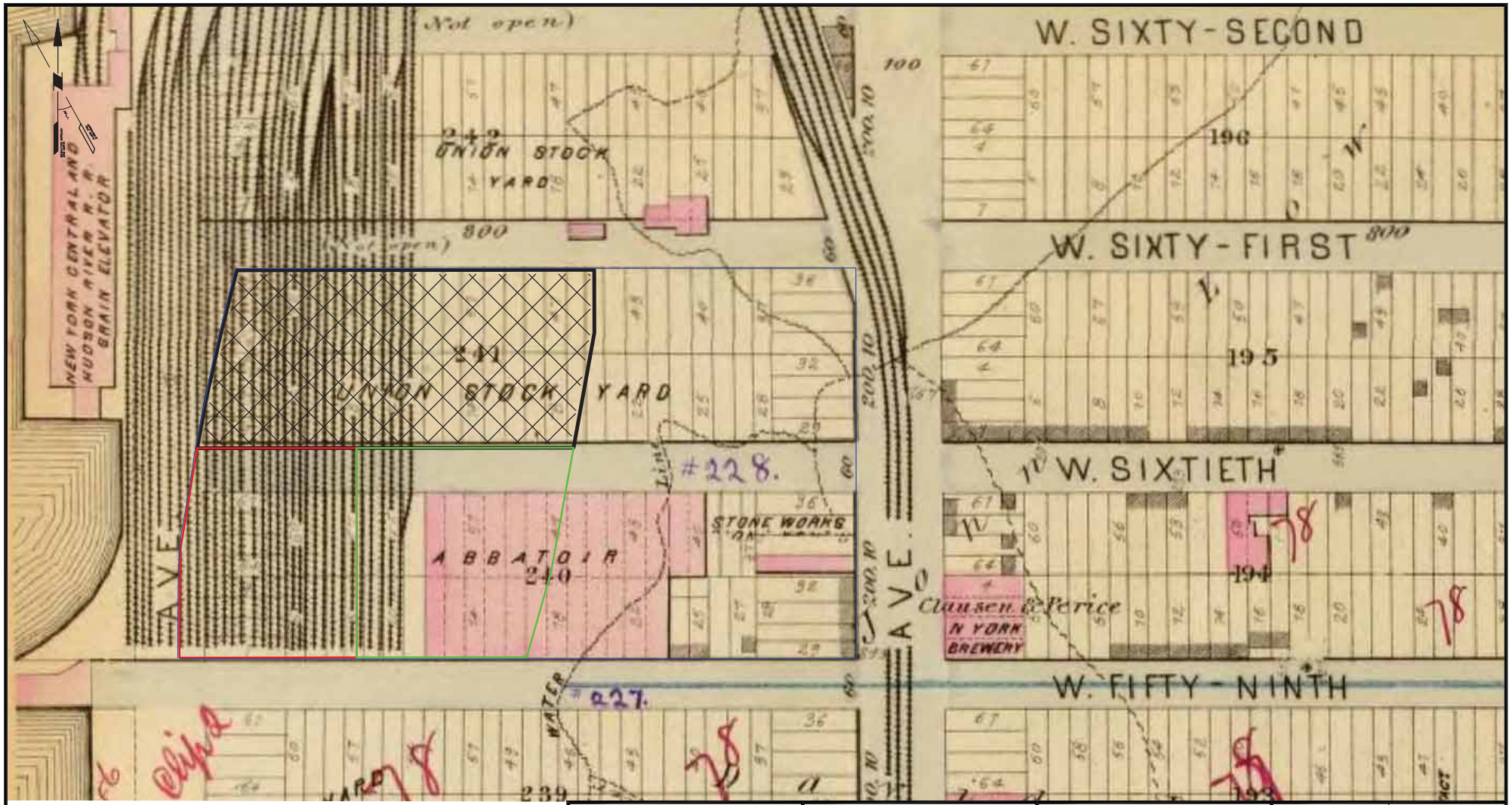

REFERENCE:
OUTLINE AND INDEX MAP OF NEW YORK CITY, NEW YORK, PLATE 16. (G.W. BROMLEY & CO., CIVIL ENGINEERS.) PUBLISHED BY GEO. W. BROMLEY & E. ROBINSON, 1879)

LEGEND

- PARCEL 1
- PARCEL 3
- PARCEL 4

LANGAN
21 Penn Plaza, 360 West 31st Street, 8th Floor
New York, NY 10001
T: 212.479.5400 F: 212.479.5444 www.langan.com

Langan Engineering, Environmental, Surveying and Landscape Architecture, D.P.C.
Langan Engineering and Environmental Services, Inc.
Langan CT, Inc.
Langan International LLC
Collectively known as Langan

Project
RIVERSIDE CENTER: BUILDING 1
BLOCK No. 1171 LOT No. 154 & 156
MANHATTAN
NEW YORK NEW YORK

Drawing Title
HISTORICAL SITE MAP (1879 BROMLEY)

Project No. 170275401	Drawing No. 4
Date 02/20/2015	
Scale N.T.S	
Drawn By JSH / Checked By JD/JMG	
Submission Date 02/20/2015	Sheet 4 of 12

© 2014 Langan

Filename: \\langan.com\data\NY\data4\170275401\cadd data - 170275401\sheetfiles\2015_ geotechnical report_r1\DWG03-06-07- Historic Site Maps.dwg Date: 2/20/2015 Time: 17:23 User: jhertz Style Table: Langan.stb Layout: DWG06

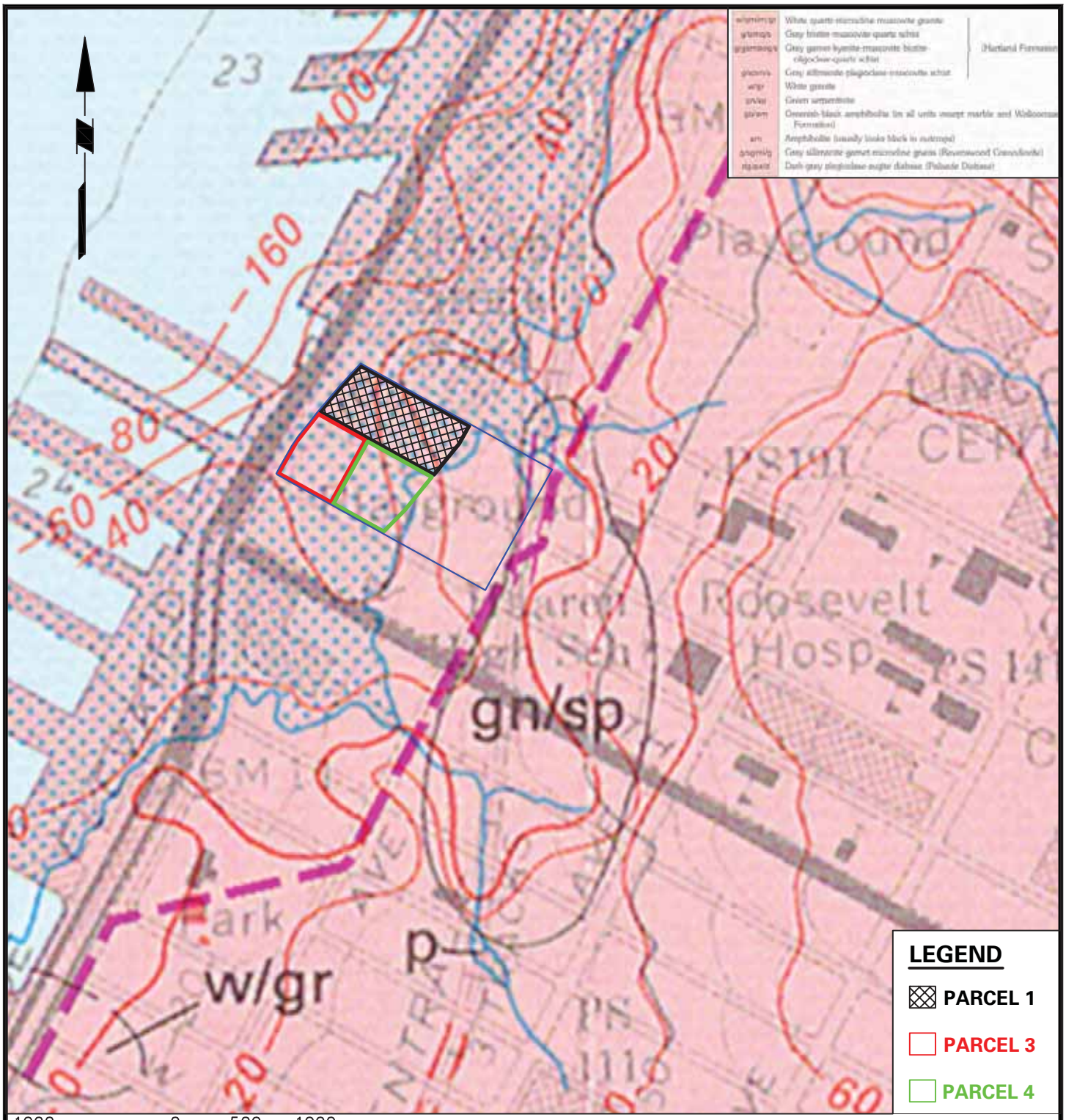

1000 0 500 1000

SCALE IN FEET

NOTE: ELEVATIONS ARE REFERENCED TO THE NATIONAL GEODETIC VERTICAL DATUM OF 1929 (NGVD 29), WHICH IS 1.1 FEET BELOW NORTH AMERICAN VERTICAL DATUM OF 1988 (NAVD 88).

SOURCE: "BEDROCK AND ENGINEERING GEOLOGIC MAPS OF NEW YORK COUNTY AND PARTS OF KINGS AND QUEENS COUNTIES, NEW YORK, AND PARTS OF BERGEN AND HUDSON COUNTIES, NEW JERSEY", BASKERVILLE,1994

LANGAN

21 Penn Plaza, 360 West 31st Street, 8th Floor
New York, NY 10001
T: 212.479.5400 F: 212.479.5444 www.langan.com

Langan Engineering, Environmental, Surveying and Landscape Architecture, D.P.C.
Langan Engineering and Environmental Services, Inc.
Langan International LLC
Collectively known as Langan

Project

RIVERSIDE CENTER: PARCEL 1

BLOCK No. 1171, LOT No. 154 & 156
MANHATTAN
NEW YORK NEW YORK

Drawing Title

GEOLOGIC MAP

Project No. 170275401	Drawing No. 5
Date 02/20/2015	
Scale 1" = 500'	
Drawn By JSH	
Submission Date 02/20/2015	Sheet 5 of 12

© 2013 Langan

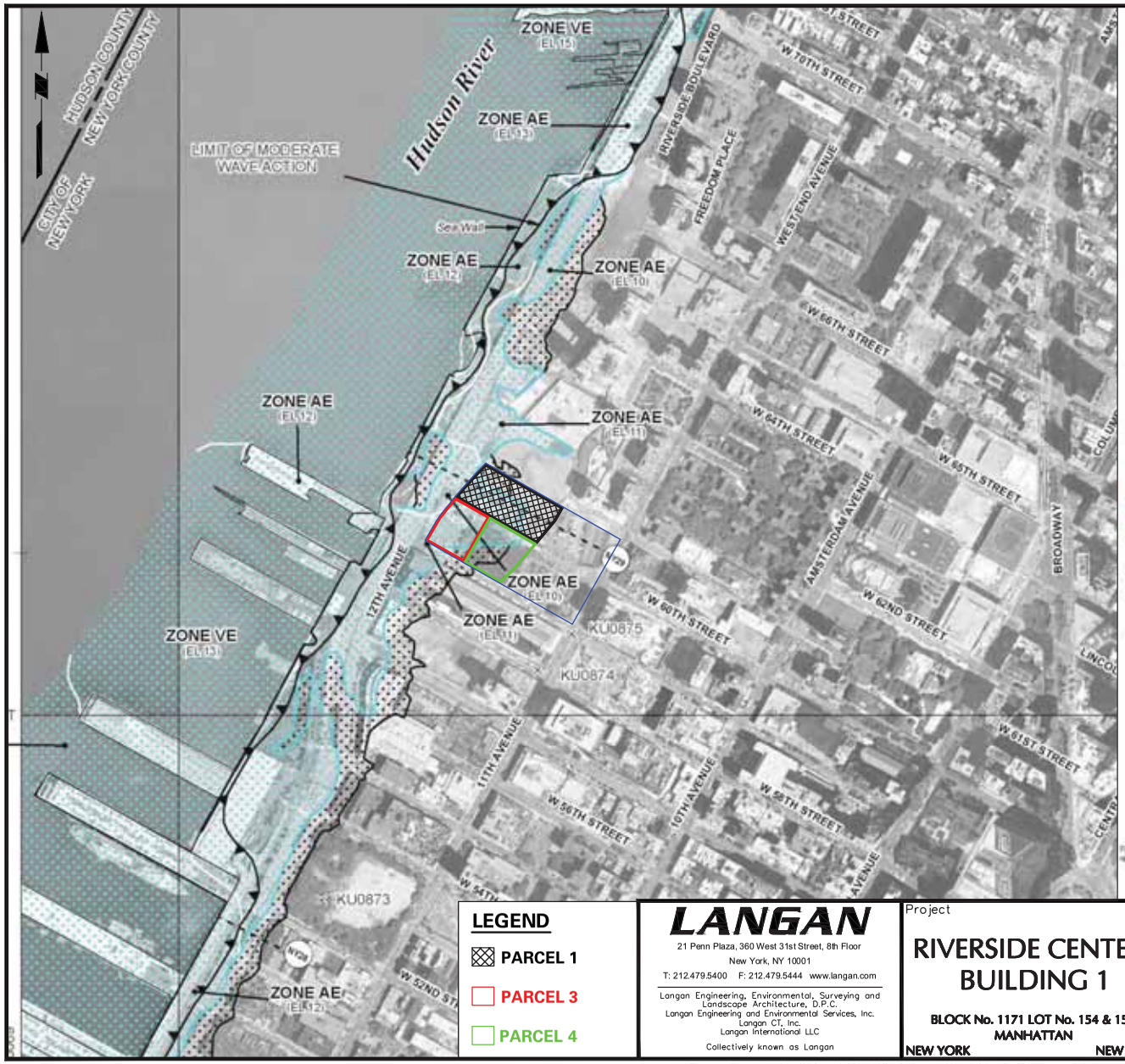

LEGEND

SPECIAL FLOOD HAZARD AREAS SUBJECT TO INUNDATION BY THE 1% ANNUAL CHANCE FLOOD

The 1% annual flood (100-year flood), also known as the base flood, is the flood that has a 1% chance of being equaled or exceeded in any given year. The Special Flood Hazard Area is the area subject to flooding by the 1% annual chance flood. Areas of Special Flood Hazard include Zones A, AE, AH, AO, AR, A99, V, and VE. The Base Flood Elevation is the water-surface elevation of the 1% annual chance flood.

ZONE A	No Base Flood Elevations determined.
ZONE AE	Base Flood Elevations determined.
ZONE AH	Flood depths of 1 to 3 feet (usually areas of ponding); Base Flood Elevations determined.
ZONE AO	Flood depths of 1 to 3 feet (usually sheet flow on sloping terrain); average depths determined. For areas of alluvial fan flooding, velocities also determined.
ZONE AR	Special Flood Hazard Area formerly protected from the 1% annual chance flood by a flood control system that was subsequently decertified. Zone AR indicates that the former flood control system is being restored to provide protection from the 1% annual chance or greater flood.
ZONE A99	Area to be protected from 1% annual chance flood by a Federal flood protection system under construction; no Base Flood Elevations determined.
ZONE V	Special flood zone with velocity hazard (wave action); no Base Flood Elevations determined.
ZONE VE	Special flood zone with velocity hazard (wave action); Base Flood Elevations determined.

FLOODWAY AREAS IN ZONE AE

The floodway is the channel of a stream plus any adjacent floodplain areas that must be kept free of encroachment so that the 1% annual chance flood can be carried without substantial increases in flood heights.

OTHER FLOOD AREAS

ZONE X — Areas of 0.2% annual chance flood; areas of 1% annual chance flood with average depths of less than 1 foot or with drainage areas less than 1 square mile; and areas protected by levees from 1% annual chance flood.

OTHER AREAS

ZONE X — Areas determined to be outside the 0.2% annual chance floodplain.

ZONE D — Areas in which flood hazards are undetermined, but possible.

COASTAL BARRIER RESOURCES SYSTEM (CBRS) AREAS

OTHERWISE PROTECTED AREAS (OPAs)

CBRS areas and OPAs are normally located within or adjacent to Special Flood Hazard Areas.

1% annual chance floodplain boundary

0.2% annual chance floodplain boundary

Floodway boundary

Zone D boundary

CBRS and OPA boundary

Boundary dividing Special Flood Hazard Areas (Zones and boundary dividing Special Flood Hazard Areas of different Base Flood Elevations, flood depths or flood velocities).

Limit of Moderate Wave Action

(EL 987) Base Flood Elevation line and value; elevation in feet*

(EL 987) Base Flood Elevation value where uniform within zone; elevation in feet*

* Referenced to the North American Vertical Datum of 1988

Cross section line

Transect line

Gulch, Rivine, Perennial or Aqueduct

Road or Railroad Bridge

Footbridge

Geographic coordinates referenced to the North American Datum of 1983 (NAD 83), Western Hemisphere

7°15'00"E 32°22'30" — 1000-meter Universal Transverse Mercator grid values, zone 20

600000 FT — 5000-foot grid values: New York State Plane coordinate system, Long Island zone (FIPSZONE 3104), Lambert Conformal Conic projection

DX5510 — Secondary grid values (see explanation in Notes to Users section of this FIRM panel)

• 513.5 — Elevation reference mark

MAP REPOSITORY
Refer to listing of Map Repositories on Map Index

INITIAL FIRM MAP DATE
June 28, 1974

FLOOD HAZARD BOUNDARY MAP REVISIONS
June 15, 1976

FLOOD INSURANCE RATE MAP EFFECTIVE
November 16, 1981

FLOOD INSURANCE RATE MAP REVISIONS

For descriptions of revisions see Notice to Users page in the Flood Insurance Study report.

To determine if flood insurance is available in this community, contact your insurance agent or call the National Flood Insurance Program at 1-800-638-6620.

NOTES:

1. ELEVATIONS CONTAINED WITHIN THIS MAP REFERENCE THE UNITED STATES GEOLOGICAL SURVEY NATIONAL GEODETIC VERTICAL DATUM OF 1929 (NGVD29).

DATUM CONVERSIONS:
NGVD29 = BPMD + 2.75'
NAVD88 = BPMD + 1.65'

2. REFERENCE: FIRM FLOOD RATE INSURANCE MAP FOR THE CITY OF NEW YORK, NEW YORK PANEL 88 OF 457 [3604970088G] MAP REVISED PRELIMINARY DECEMBER 5, 2013.

NFIP — NATIONAL FLOOD INSURANCE PROGRAM

PANEL 0088G

FIRM
FLOOD INSURANCE RATE MAP

CITY OF,
NEW YORK
NEW YORK
BRONX, RICHMOND, NEW YORK, QUEENS, AND KINGS COUNTIES

PANEL 88 OF 457
(SEE MAP INDEX FOR FIRM PANEL LAYOUT)

CONTAINS

COMMUNITY	NUMBER	PANEL	SUFFIX
NEW YORK, CITY OF	360497	0088	G

PRELIMINARY
DECEMBER 5, 2013

Notice to User: The **Map Number** shown below should be used when placing map orders; the **Community Number** shown above should be used on insurance applications for the subject community.

MAP NUMBER
3604970088G

MAP REVISED

Federal Emergency Management Agency

LEGEND

- PARCEL 1
- PARCEL 3
- PARCEL 4

LANGAN
21 Penn Plaza, 360 West 31st Street, 8th Floor
New York, NY 10001
T: 212.479.5400 F: 212.479.5444 www.langan.com

Langan Engineering, Environmental, Surveying and Landscape Architecture, D.P.C.
Langan Engineering and Environmental Services, Inc.
Langan CT, Inc.
Langan International LLC
Collectively known as Langan

Project
RIVERSIDE CENTER: BUILDING 1
BLOCK No. 1171 LOT No. 154 & 156
MANHATTAN
NEW YORK NEW YORK

Drawing Title
PRELIMINARY FLOOD RATE INSURANCE MAP

Project No. 170275401	Drawing No. 6
Date 02/20/2015	
Scale N.T.S	
Drawn By JSH / Checked By JD/JMG	
Submission Date 02/20/2015	Sheet 6 of 12

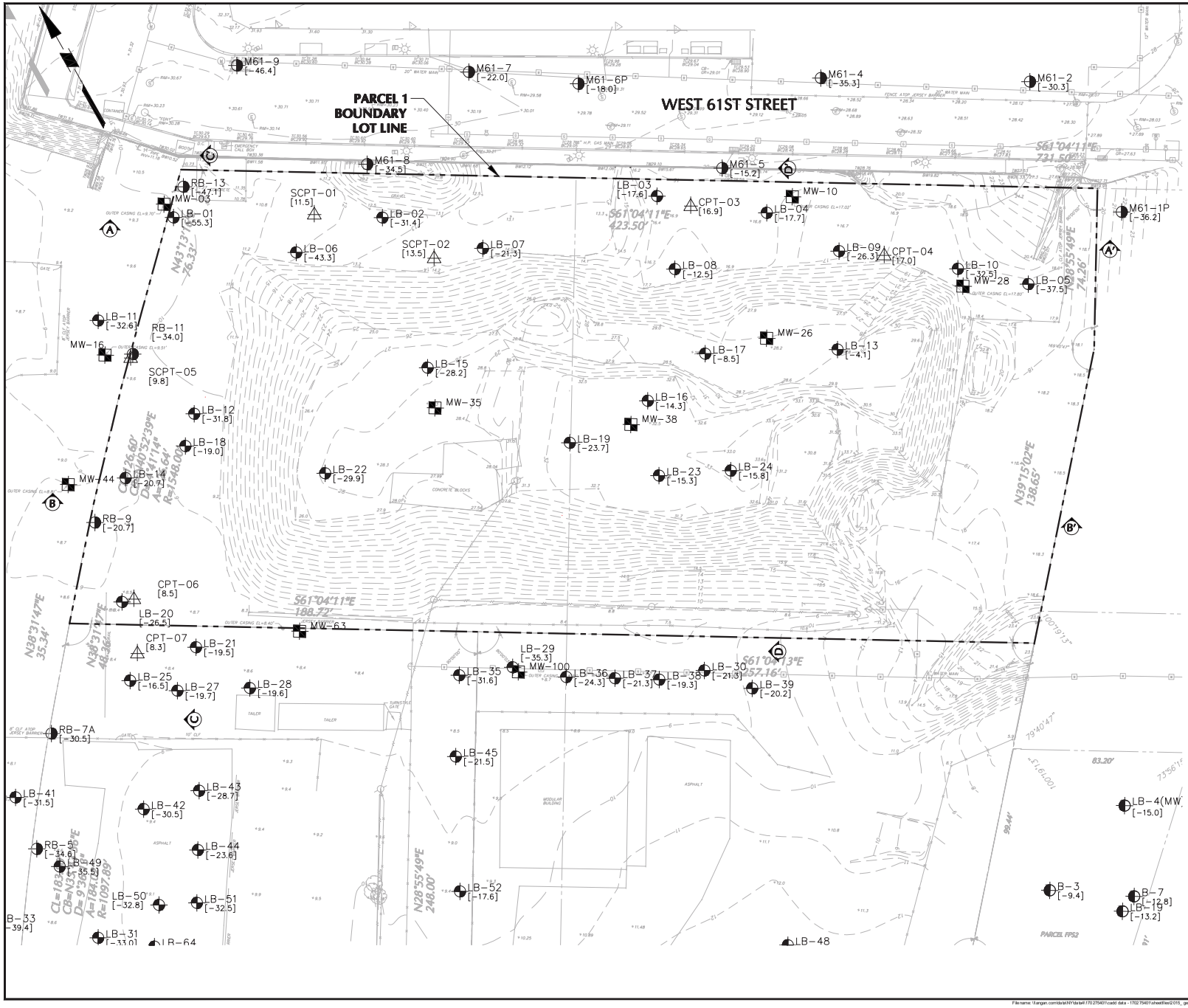

GENERAL NOTES:

1. EXISTING CONDITIONS INFORMATION TAKEN FROM PRELIMINARY DRAFT TOPOGRAPHIC & BOUNDARY DRAFT SURVEY PREPARED BY LANGAN ENGINEERING, ENVIRONMENTAL, SURVEYING AND LANDSCAPE ARCHITECTURE, D.P.C. DATED 20 JANUARY 2015..
2. ALL ELEVATIONS CONTAINED WITHIN THIS DRAWING REFERENCE THE NORTH AMERICAN VERTICAL DATUM OF 1988 (NAVD88).

   DATUM CONVERSIONS:
   NAVD88 = BPMD + 1.65'
   NGVD29 = BPMD + 2.75'
3. ALL LANGAN BORING LOCATIONS WERE SURVEYED BY LANGAN. ALL OTHER BORING LOCATIONS SHOULD BE CONSIDERED APPROXIMATE.
4. DRILLING OF BORINGS LB-1 THROUGH LB-30 WAS PERFORMED BY WARREN GEORGE INC OF JERSEY CITY, NEW JERSEY BETWEEN 16 DECEMBER 2014 AND 10 JANUARY 2015.
5. CONE PENETRATION TESTING AT SCPT-01 THROUGH SCPT-07 WAS PERFORMED BY CONETEC, INC OF WEST BERLIN, NEW JERSEY ON 10 JANUARY 2015.
6. ALL DRILLING WAS PERFORMED UTILIZING MUD ROTARY DRILLING TECHNIQUES.
7. DISTURBED SOIL SAMPLES WERE OBTAINED USING A STANDARD 2-INCH OUTSIDE DIAMETER SPLIT-SPOON SAMPLER FREE FALLIN AT A HEIGHT OF 30-INCHES.
8. UNDISTURBED SAMPLES WERE OBTAINED USING 2.7-INCH OUTSIDE DIAMETER THIN WALLED TUBES.
9. ROCK CORING WAS PERFORMED UTILIZING TYPE NQ DOUBE WALL CORE BARRELS.
10. BORINGS SHOWN HEREON WERE USED IN DEVELOPING ROCK EVALUATION; SOME HISTORICAL BORINGS WERE OMITTED AS LACKING INFO.

LEGEND:

LB-15 [-28.2]	LANGAN BORING 2015 APPROXIMATE ELEVATION (TOP OF ROCK)
RB-1 [-35.2]	BORINGS BY OTHERS APPROXIMATE ELEVATION (TOP OF ROCK)
	LANGAN SEISMIC CONE PENETROMETER TESTS APPROXIMATE ELEVATION (GROUND SURFACE)
CPT-03 [16.9]	LANGAN CONE PENETROMETER TESTS APPROXIMATE ELEVATION (GROUND SURFACE)
MW-26	LANGAN GROUNDWATER MONITORING WELLS 2015
13	EXISTING GROUND SURFACE CONTOURS

LANGAN

21 Penn Plaza, 360 West 31st Street, 8th Floor, New York, NY 10001
T: 212.479.5400 F: 212.479.5444 www.langan.com

NEW JERSEY NEW YORK CONNECTICUT PENNSYLVANIA OHIO
VIRGINIA WASHINGTON DC FLORIDA NORTH DAKOTA CALIFORNIA
ABU DHABI ATHENS DOHA DUBAI ISTANBUL

Langan Engineering, Environmental, Surveying and Landscape Architecture, D.P.C.
Langan Engineering and Environmental Services, Inc.
Langan CT, Inc.
Langan Canada Inc.
Collectively known as Langan

Project

RIVERSIDE CENTER: BUILDING 1

BLOCK No. 1171, LOT No. 154 & 156
MANHATTAN

NEW YORK NEW YORK

Drawing Title

SUBSURFACE INVESTIGATION PLAN

Project No. 170275401	Drawing No. 7
Date 02/20/2015	
Scale 1" = 20'	
Drawn By JSH / Checked By JD	
Submission Date 02/20/2015	Sheet 7 of 12

Filename: \\langan.com\data\NY\data\170\275401\cadd data - 170275401\sheetfiles\2015_geotechnical report_r1\DWG 10 - SUBSURFACE INVESTIGATION PLAN.dwg Date: 2/20/2015 Time: 17:25 User: jherb Style Table: Langan.stb Layout: ARCHD-BL

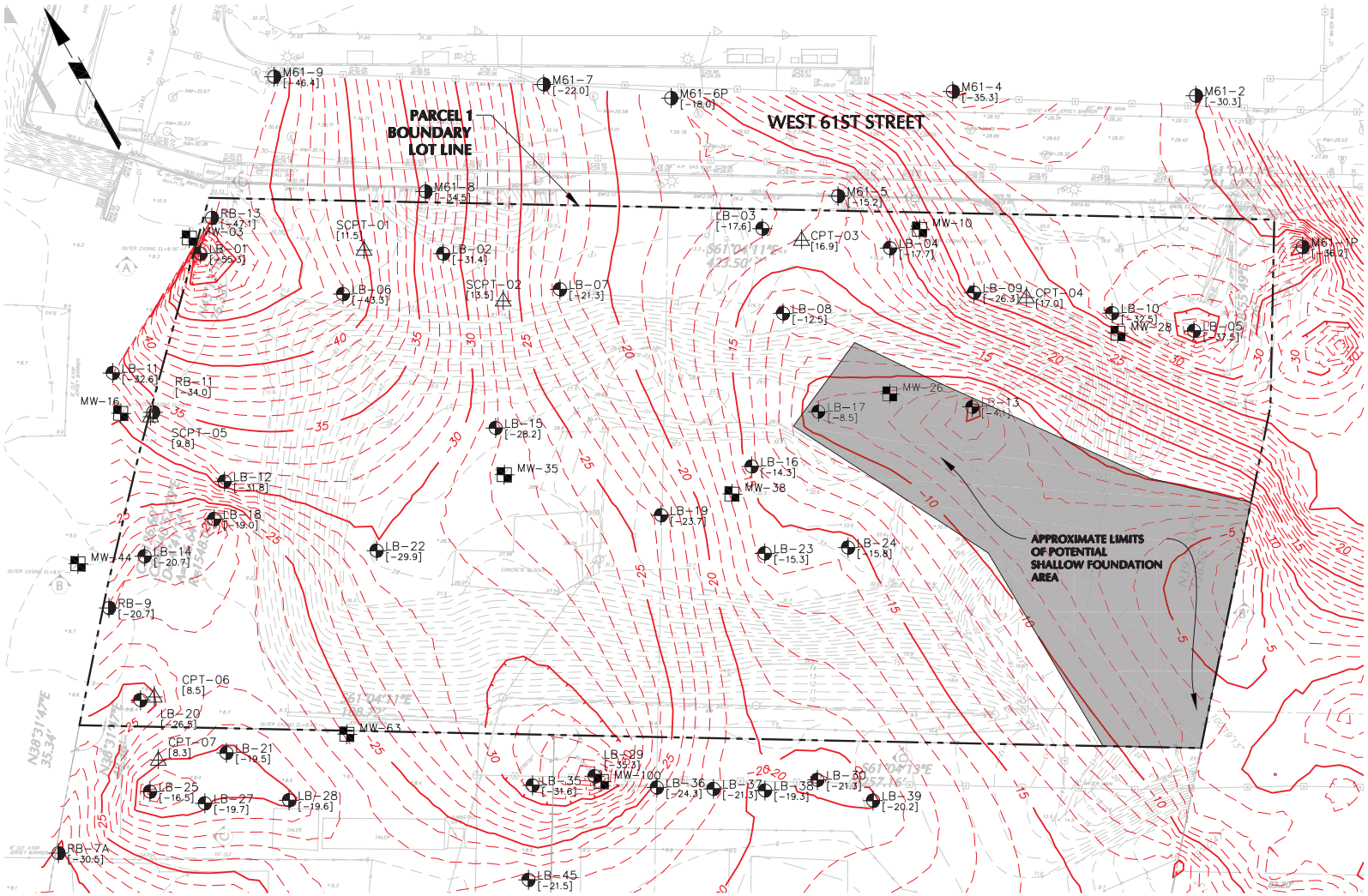

GENERAL NOTES:

1. EXISTING CONDITIONS INFORMATION TAKEN FROM PRELIMINARY DRAFT TOPOGRAPHIC & BOUNDARY DRAFT SURVEY PREPARED BY LANGAN ENGINEERING, ENVIRONMENTAL, SURVEYING AND LANDSCAPE ARCHITECTURE, D.P.C. DATED 20 JANUARY 2015..
2. ALL ELEVATIONS CONTAINED WITHIN THIS DRAWING REFERENCE THE NORTH AMERICAN VERTICAL DATUM OF 1988 (NAVD88).

   DATUM CONVERSIONS:
   NAVD88 = BPMD + 1.65'
   NGVD29 = BPMD + 2.75'
3. ALL LANGAN BORING LOCATIONS WERE SURVEYED BY LANGAN. ALL OTHER BORING LOCATIONS SHOULD BE CONSIDERED APPROXIMATE.
4. BEDROCK ELEVATIONS CONTAINED HEREIN HAVE BEEN DETERMINED USING MULTIPLE DATA SOURCES. LANGAN MAKES NO WARRANTY AS TO THE ACCURACY OF THIS DATA.
5. BORINGS SHOWN HEREON WERE USED IN DEVELOPING ROCK EVALUATION; SOME HISTORICAL BORINGS WERE OMITTED AS LACKING INFO.
6. ROCK CONTOURS WERE DETERMINED BY LINEAR INTERPOLATION BETWEEN BOREHOLES.
7. ROCK CONTOURS ARE BASED ON A LIMITED NUMBER OF BORINGS THAT PROVIDED INFORMATION ONLY AT THE DRILLED LOCATIONS.
8. BORINGS SHOWN HEREON WERE USED IN DEVELOPING ROCK EVALUATION; SOME HISTORICAL BORINGS WERE OMITTED AS LACKING INFORMATION.
9. THE ROCK CONTOURS SHOWN ON THIS PLAN INDICATE THE APPROXIMATE TOP OF NEW YORK CITY BUILDING CODE CLASS 1C ROCK OR BETTER.
10. BEDROCK ELEVATIONS EAST OF PARCEL 1 (WITHIN PARCEL 2 AREA) WERE DETERMINED FROM DRIVEN PILE TIP ELEVATIONS FROM DRIVEN PILES INSPECTED BY LANGAN DURING THE CONSTRUCTION OF THE BUILDING WITHIN THE LIMITS OF PARCEL 2.
11. REFER TO DRAWINGS 9 AND 10 FOR SUBSURFACE CROSS SECTIONS.

LEGEND:

LB-15 [-28.2]	LANGAN BORING 2015 APPROXIMATE ELEVATION (TOP OF ROCK)
	BORINGS BY OTHERS (SEE LIST BELOW) APPROXIMATE ELEVATION (TOP OF ROCK)
	LANGAN SEISMIC CONE PENETROMETER TESTS APPROXIMATE ELEVATION (GROUND SURFACE)
CPT-03 [16.9]	LANGAN CONE PENETROMETER TESTS APPROXIMATE ELEVATION (GROUND SURFACE)
MW-26	LANGAN GROUNDWATER MONITORING WELLS 2015
—30—	MAJOR CONTOUR LINE (5-FOOT INTERVALS) APPROXIMATE ELEVATION (TOP OF NYCBC CLASS 1C ROCK OR BETTER)
	MINOR CONTOUR LINE (1-FOOT INTERVALS) APPROXIMATE ELEVATION (TOP OF NYCBC CLASS 1C ROCK OR BETTER)

FOR REFERENCE ONLY

LANGAN

21 Penn Plaza, 360 West 31st Street, 8th Floor, New York, NY 10001
T: 212.479.5400 F: 212.479.5444 www.langan.com

NEW JERSEY NEW YORK CONNECTICUT PENNSYLVANIA OHIO VIRGINIA WASHINGTON DC FLORIDA NORTH DAKOTA CALIFORNIA
ABU DHABI ATHENS DOHA DUBAI ISTANBUL

Langan Engineering, Environmental, Surveying and Landscape Architecture, D.P.C.
Langan Engineering and Environmental Services, Inc.
Langan CT, Inc.
Langan Canada Inc.
Collectively known as Langan

Project

RIVERSIDE CENTER: BUILDING 1

BLOCK No. 1171, LOT No. 154 & 156
MANHATTAN

NEW YORK NEW YORK

Drawing Title

ESTIMATED TOP OF ROCK ELEVATION PLAN

Project No. 170275401		Drawing No. 8
Date 02/20/2015		
Scale 1" = 20'		
Drawn By JSH	Checked By JD	
Submission Date 02/20/2015		Sheet 8 of 12

Filename: \\langan.com\data\NY\data\17\170275401\cad\dwgs - 170275401\sheetfiles\2015_geotechnical export_rt DWG11- TOP OF ROCK ELEVATION PLAN.dwg - Date: 2/20/2015 Time: 17:25 User: jherb Style Table: Langan.stb Layout: ARCHD-8L

© 2015 Langan

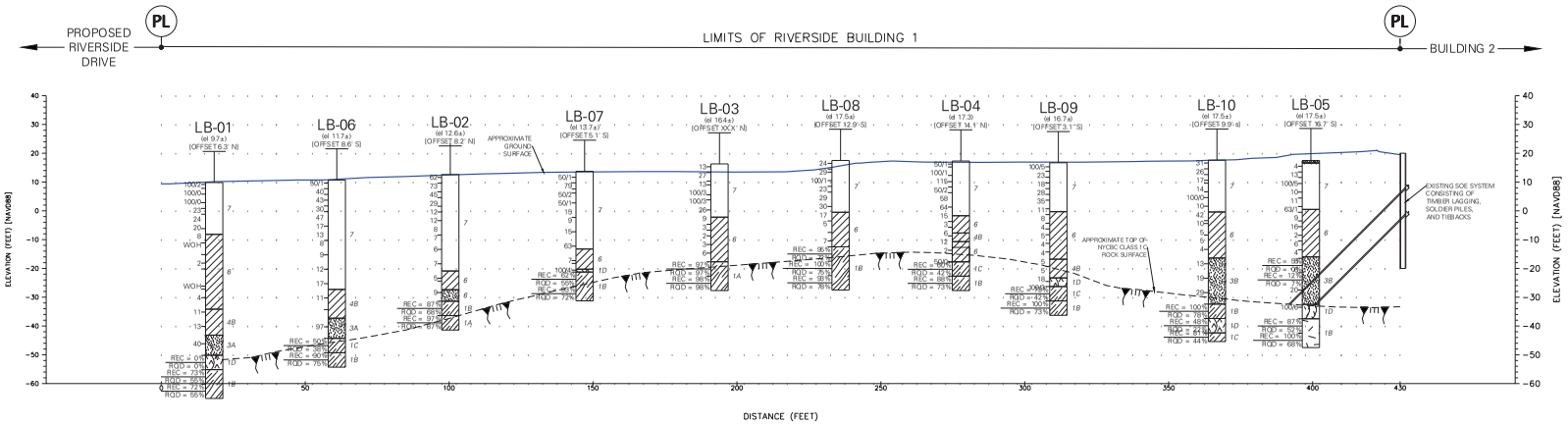

SUBSURFACE PROFILE A-A' (BUILDING 1) FACING NORTH

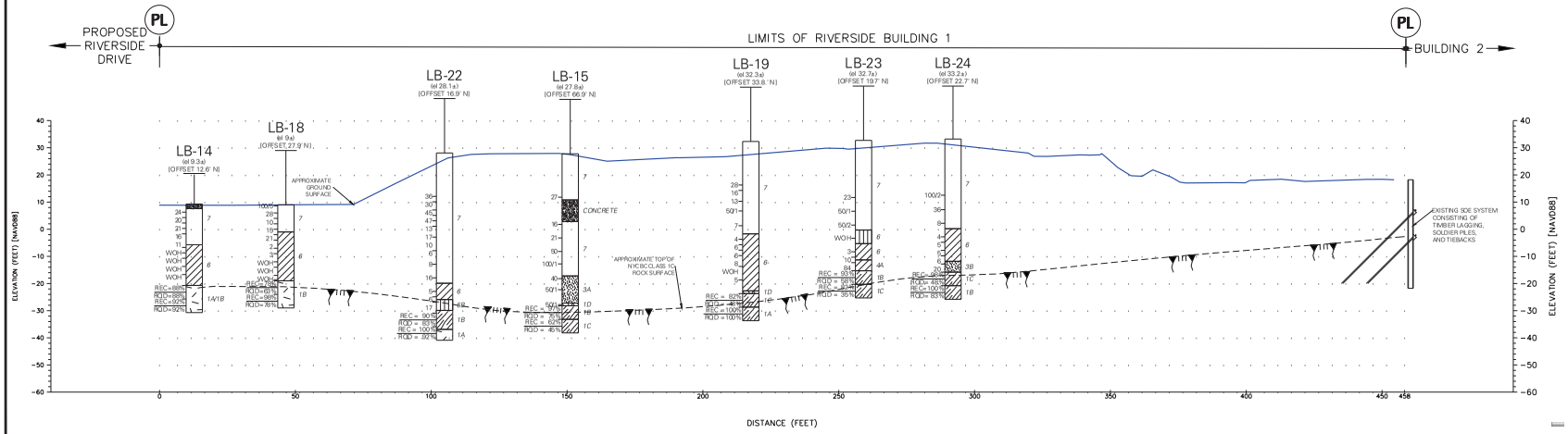

SUBSURFACE PROFILE B-B' (BUILDING 1) FACING NORTH

GENERAL NOTES:

1. EXISTING CONDITIONS INFORMATION TAKEN FROM PRELIMINARY DRAFT TOPOGRAPHIC & BOUNDARY DRAFT SURVEY PREPARED BY LANGAN ENGINEERING, ENVIRONMENTAL, SURVEYING AND LANDSCAPE ARCHITECTURE, D.P.C. DATED 20 JANUARY 2015..
2. ALL ELEVATIONS CONTAINED WITHIN THIS DRAWING REFERENCE THE NORTH AMERICAN VERTICAL DATUM OF 1988 (NAVD88).

   DATUM CONVERSIONS:
   NAVD88 = BPMD + 1.65'
   NGVD29 = BPMD + 2.75'
3. ALL LANGAN BORING LOCATIONS WERE SURVEYED BY LANGAN. ALL OTHER BORING LOCATIONS SHOULD BE CONSIDERED APPROXIMATE.
4. BEDROCK ELEVATIONS CONTAINED HEREIN HAVE BEEN DETERMINED USING MULTIPLE DATA SOURCES. LANGAN MAKES NO WARRANTY AS TO THE ACCURACY OF THIS DATA.
5. BORINGS SHOWN HEREON WERE USED IN DEVELOPING ROCK EVALUATION; SOME HISTORICAL BORINGS WERE OMITTED AS LACKING INFO.
6. ROCK CONTOURS WERE DETERMINED BY LINEAR INTERPOLATION BETWEEN BOREHOLES.
7. ROCK CONTOURS ARE BASED ON A LIMITED NUMBER OF BORINGS THAT PROVIDED INFORMATION ONLY AT THE DRILLED LOCATIONS.
8. BORINGS SHOWN HEREON WERE USED IN DEVELOPING ROCK EVALUATION; SOME HISTORICAL BORINGS WERE OMITTED AS LACKING INFORMATION.
9. BEDROCK ELEVATIONS EAST OF PARCEL 1 (WITHIN PARCEL 2 AREA) WERE DETERMINED FROM DRIVEN PILE TIP ELEVATIONS FROM DRIVEN PILES INSPECTED BY LANGAN DURING THE CONSTRUCTION OF THE BUILDING WITHIN THE LIMITS OF PARCEL 2.
10. SUBSURFACE LITHOLOGY INTERPRETED FROM RECOVERED SOIL AND ROCK CORE SAMPLES AND FROM AVAILABLE HISTORICAL BORING LOGS. REFER TO BORING LOGS FOR ADDITIONAL INFORMATION. HISTORICAL BORING DATA IS PROVIDED FOR REFERENCE TO GENERALIZED LITHOLOGY ONLY.
11. THE APPROXIMATE TOP OF ROCK SURFACE LINE DISPLAYED IN THE SUBSURFACE PROFILES IS GENERATED FROM A 3D ROCK CONTOUR SURFACE USING AUTOCAD CIVIL3D. IN ADDITION, OFFSET DISTANCES FROM THE CLOSEST BORINGS TO THE PROFILE SECTION ARE PROVIDED UNDER EACH BORING STICK FOR REFERENCE.
12. REFER TO DRAWING NO. 7 FOR LOCATION OF SECTIONS.

BORING FENCE KEY DIAGRAM AND LITHOLOGY NOTES

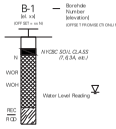

N	STANDARD PENETRATION RESISTANCE; NUMBER OF BLOWS OF A 140 LB HAMMER FREE FALLING 30 IN TO DRIVE A 2 IN O.D. SPLIT SPOON SAMPLER 12 IN, AFTER 6 IN OF INITIAL PENETRATION
WOR	2 FT PENETRATION OF THE SPLIT SPOON SAMPLER UNDER THE WEIGHT OF DRILL RODS
WOH	2 FT PENETRATION OF THE SPLIT SPOON SAMPLER UNDER THE STATIC WEIGHT OF THE DRIVING HAMMER
U	UNDISTURBED SAMPLE
REC	(LENGTH OF ROCK RETRIEVED) / (LENGTH OF ROCK CORED) * 100%
RQD	(LENGTH OF ROCK 4 IN OR LONGER) / (LENGTH OF ROCK CORED) * 100%

MATERIAL SYMBOLS

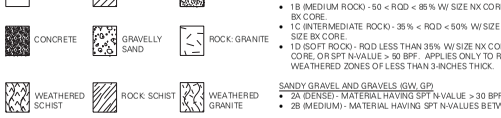

LITHOLOGY GRAPHICS AND NOTES:

NEW YORK CITY BUILDING CODE MATERIAL CLASSIFICATION NOTES:

BEDROCK
- 1A (HARD SOUND ROCK) - RQD > 85% W/ SIZE NX CORE OR REC > 85% W/ SIZE BX CORE.
- 1B (MEDIUM ROCK) - 50 < RQD < 85% W/ SIZE NX CORE OR 50% > REC < 85% W/ SIZE BX CORE.
- 1C (INTERMEDIATE ROCK) - 35% < RQD < 50% W/ SIZE NX CORE OR 35% < REC 50% W/ SIZE BX CORE.
- 1D (SOFT ROCK) - RQD LESS THAN 35% W/ SIZE NX CORE OR REC < 35% W/ SIZE BX CORE, OR SPT N-VALUE > 50 BPF. APPLIES ONLY TO ROCK WITH COMPLETELY WEATHERED ZONES OF LESS THAN 3-INCHES THICK.

SANDY GRAVEL AND GRAVELS (GW, GP)
- 2A (DENSE) - MATERIAL HAVING SPT N-VALUE > 30 BPF.
- 2B (MEDIUM) - MATERIAL HAVING SPT N-VALUES BETWEEN 10 AND 30 BPF.

GRANULAR SOILS (GM, GC, SM, SC, SP, SW)
- 3A (DENSE) - MATERIAL HAVING SPT N-VALUE > 30 BPF.
- 3B (MEDIUM) - MATERIAL HAVING SPT N-VALUES BETWEEN 10 AND 30 BPF

CLAYS (CL, CH)
- 4A (HARD) - MATERIAL HAVING SPT N-VALUE > 30 BPF, UNCONFINED COMPRESSIVE STRENGTH (UCS) > 4TSF
- 4B (STIFF) - MATERIAL HAVING SPT N-VALUES BETWEEN 8 AND 30 BPF, UCS BETWEEN 1 AND 4 TSF
- 4C (MEDIUM) -MATERIAL HAVING SPT N-VALUES BETWEEN 4 AND 8 BPF, UCS BETWEEN 0.5 AND 1 TSF

CLASS 5 - SILTS AND CLAYEY SILTS (ML, MH)
- 5A (DENSE) - MATERIAL HAVING SPT N-VALUE > 30 BPF
- 5B (MEDIUM) - MATERIAL HAVING SPT N-VALUES BETWEEN 10 AND 30 BPF

CLASS 6 - NOMINALLY UNSATISFACTORY BEARING MATERIALS
- LOOSE SANDY GRAVEL AND GRAVELS, GRANULAR SOILS, AND SILTS OF CLASSES 2, 3, OR 5, RESPECTIVELY HAVING SPT N-VLAUES < 10 BPF
- SOFT CLAYS OF CLASS 4 HAVING SPT N-VLAUES < 4 BPF, UNCONFIEND COMPRESIVE STRENGTHS LESS THAN 0.5 TSF.

CLASS 7 - CONTROLLED AND UNCONTROLLED FILL
- ALL FILLS HAVING BEEN PLACED IN EITHER CONTROLLED OR UNCONTROLLED SETTINGS.

LANGAN
21 Penn Plaza, 360 West 31st Street, 8th Floor, New York, NY 10001
T: 212.479.5400 F: 212.479.5444 www.langan.com
NEW JERSEY NEW YORK CONNECTICUT PENNSYLVANIA OHIO VIRGINIA WASHINGTON, D.C. FLORIDA NORTH DAKOTA CALIFORNIA
ABU DHABI ATHENS DOHA DUBAI ISTANBUL
Langan Engineering, Environmental, Surveying and Landscape Architecture, D.P.C.
Langan Engineering and Environmental Services, Inc.
Langan CT, Inc.
Langan Canada Inc.
Collectively known as Langan

Project

RIVERSIDE CENTER: BUILDING 1

BLOCK No. 1171, LOT No. 154 & 156
MANHATTAN

NEW YORK NEW YORK

Drawing Title

SUBSURFACE PROFILE A-A' & B-B'

Project No. 170273401	Drawing No. 9
Date 02/20/2015	
Scale 1" = 20'	
Drawn By JSH / Checked By JD	
Submission Date 02/20/2015	Sheet 9 of 12

© 2015 Langan

Filename: \\langan.com\data\NY\data\170273401\cad\data - 170273401\sheetfiles\2015_ geotechnical report_rf\DWG\12-13 - SUBSURFACE PROFILES.dwg Date: 2/20/2015 Time: 17:26 User: jhertz Style Table: Langan.stb Layout: A-A

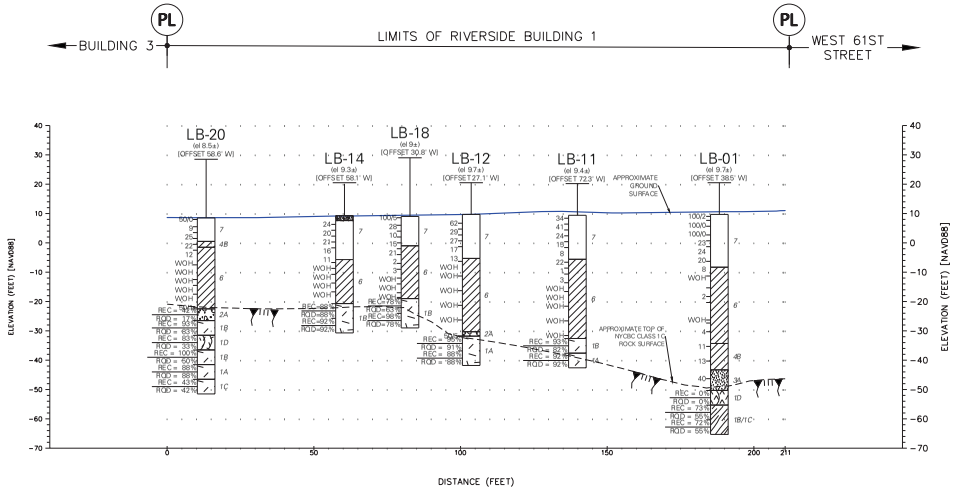

SUBSURFACE PROFILE C-C' (BUILDING 1)

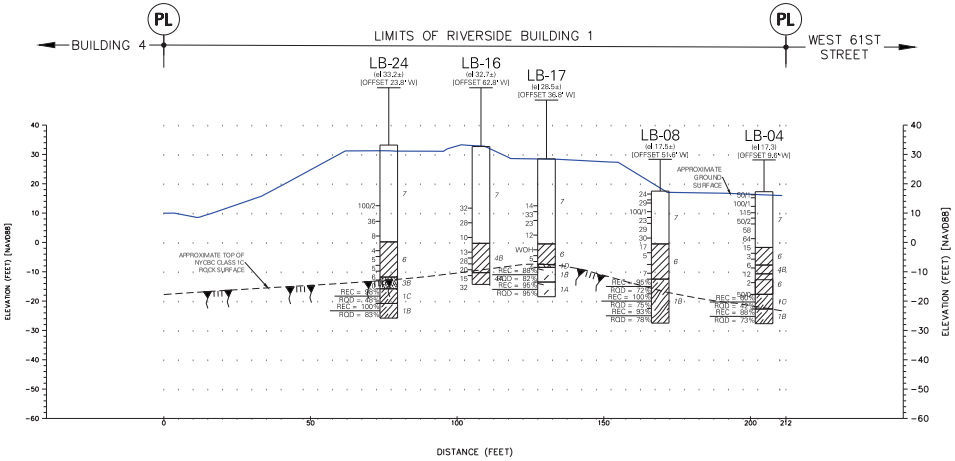

SUBSURFACE PROFILE D-D' (BUILDING 1)
FACING WEST

GENERAL NOTES:

1. EXISTING CONDITIONS INFORMATION TAKEN FROM PRELIMINARY DRAFT TOPOGRAPHIC & BOUNDARY DRAFT SURVEY PREPARED BY LANGAN ENGINEERING, ENVIRONMENTAL, SURVEYING AND LANDSCAPE ARCHITECTURE, D.P.C. DATED 20 JANUARY 2015..
2. ALL ELEVATIONS CONTAINED WITHIN THIS DRAWING REFERENCE THE NORTH AMERICAN VERTICAL DATUM OF 1988 (NAVD88).

   DATUM CONVERSIONS:
   NAVD88 = BPMD + 1.65'
   NGVD29 = BPMD + 2.75'
3. ALL LANGAN BORING LOCATIONS WERE SURVEYED BY LANGAN. ALL OTHER BORING LOCATIONS SHOULD BE CONSIDERED APPROXIMATE.
4. BEDROCK ELEVATIONS CONTAINED HEREIN HAVE BEEN DETERMINED USING MULTIPLE DATA SOURCES. LANGAN MAKES NO WARRANTY AS TO THE ACCURACY OF THIS DATA.
5. BORINGS SHOWN HEREON WERE USED IN DEVELOPING ROCK EVALUATION; SOME HISTORICAL BORINGS WERE OMITTED AS LACKING INFO.
6. ROCK CONTOURS WERE DETERMINED BY LINEAR INTERPOLATION BETWEEN BOREHOLES.
7. ROCK CONTOURS ARE BASED ON A LIMITED NUMBER OF BORINGS THAT PROVIDED INFORMATION ONLY AT THE DRILLED LOCATIONS.
8. BORINGS SHOWN HEREON WERE USED IN DEVELOPING ROCK EVALUATION; SOME HISTORICAL BORINGS WERE OMITTED AS LACKING INFORMATION.
9. BEDROCK ELEVATIONS EAST OF PARCEL 1 WITHIN PARCEL 2 AREA) WERE DETERMINED FROM DRIVEN PILE TIP ELEVATIONS FROM DRIVEN PILES INSPECTED BY LANGAN DURING THE CONSTRUCTION OF THE BUILDING WITHIN THE LIMITS OF PARCEL 2.
10. SUBSURFACE LITHOLOGY INTERPRETED FROM RECOVERED SOIL AND ROCK CORE SAMPLES AND FROM AVAILABLE HISTORICAL BORING LOGS. REFER TO BORING LOGS FOR ADDITIONAL INFORMATION. HISTORICAL BORING DATA IS PROVIDED FOR REFERENCE TO GENERALIZED LITHOLOGY ONLY.
11. THE APPROXIMATE TOP OF ROCK SURFACE LINE DISPLAYED IN THE SUBSURFACE PROFILES IS GENERATED FROM A 3D ROCK CONTOUR SURFACE USING AUTOCAD CIVIL3D. IN ADDITION, OFFSET DISTANCES FROM THE CLOSEST BORINGS TO THE PROFILE SECTION ARE PROVIDED UNDER EACH BORING STICK FOR REFERENCE.
12. REFER TO DRAWING NO. 7 FOR LOCATION OF SECTIONS.

BORING FENCE KEY DIAGRAM AND LITHOLOGY NOTES

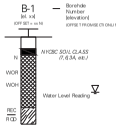

N	STANDARD PENETRATION RESISTANCE; NUMBER OF BLOWS OF A 140 LB HAMMER FREE FALLING 30 IN TO DRIVE A 2 IN O.D. SPLIT SPOON SAMPLER 12 IN. AFTER 6 IN OF INITIAL PENETRATION
WOR	2 FT PENETRATION OF THE SPLIT SPOON SAMPLER UNDER THE WEIGHT OF DRILL RODS
WOH	2 FT PENETRATION OF THE SPLIT SPOON SAMPLER UNDER THE STATIC WEIGHT OF THE DRIVING HAMMER
U	UNDISTURBED SAMPLE
REC	(LENGTH OF ROCK RETRIEVED) / (LENGTH OF ROCK CORED) * 100%
RQD	(LENGTH OF ROCK 4 IN OR LONGER) / (LENGTH OF ROCK CORED) * 100%

MATERIAL SYMBOLS

LITHOLOGY GRAPHICS AND NOTES:

NEW YORK CITY BUILDING CODE MATERIAL CLASSIFICATION NOTES:

BEDROCK
- 1A (HARD SOUND ROCK) - RQD > 85% W/ SIZE NX CORE OR REC > 85% W/ SIZE BX CORE.
- 1B (MEDIUM ROCK) - 50 < RQD < 85% W/ SIZE NX CORE OR 50% > REC < 85% W/ SIZE BX CORE.
- 1C (INTERMEDIATE ROCK) - 35% < RQD < 50% W/ SIZE NX CORE OR 35% < REC 50% W/ SIZE BX CORE.
- 1D (SOFT ROCK) - RQD LESS THAN 35% W/ SIZE NX CORE OR REC < 35% W/ SIZE BX CORE, OR SPT N-VALUE > 50 BPF. APPLIES ONLY TO ROCK WITH COMPLETELY WEATHERED ZONES OF LESS THAN 3-INCHES THICK.

SANDY GRAVEL AND GRAVELS (GW, GP)
- 2A (DENSE) - MATERIAL HAVING SPT N-VALUE > 30 BPF.
- 2B (MEDIUM) - MATERIAL HAVING SPT N-VALUES BETWEEN 10 AND 30 BPF.

GRANULAR SOILS (GM, GC, SM, SC, SP, SW)
- 3A (DENSE) - MATERIAL HAVING SPT N-VALUE > 30 BPF.
- 3B (MEDIUM) - MATERIAL HAVING SPT N-VALUES BETWEEN 10 AND 30 BPF

CLAYS (CL, CH)
- 4A (HARD) - MATERIAL HAVING SPT N-VALUE > 30 BPF, UNCONFINED COMPRESSIVE STRENGTH (UCS) > 4TSF
- 4B (STIFF) - MATERIAL HAVING SPT N-VALUES BETWEEN 8 AND 30 BPF, UCS BETWEEN 1 AND 4 TSF
- 4C (MEDIUM) -MATERIAL HAVING SPT N-VALUES BETWEEN 4 AND 8 BPF, UCS BETWEEN 0.5 AND 1 TSF

CLASS 5 - SILTS AND CLAYEY SILTS (ML, MH)
- 5A (DENSE) - MATERIAL HAVING SPT N-VALUE > 30 BPF
- 5B (MEDIUM) - MATERIAL HAVING SPT N-VALUES BETWEEN 10 AND 30 BPF

CLASS 6 - NOMINALLY UNSATISFACTORY BEARING MATERIALS
- LOOSE SANDY GRAVEL AND GRAVELS, GRANULAR SOILS, AND SILTS OF CLASSES 2, 3, OR 5, RESPECTIVELY HAVING SPT N-VLAUES < 10 BPF
- SOFT CLAYS OF CLASS 4 HAVING SPT N-VLAUES < 4 BPF, UNCONFIEND COMPRESIVE STRENGTHS LESS THAN 0.5 TSF.

CLASS 7 - CONTROLLED AND UNCONTROLLED FILL
- ALL FILLS HAVING BEEN PLACED IN EITHER CONTROLLED OR UNCONTROLLED SETTINGS.

LANGAN
21 Penn Plaza, 360 West 31st Street, 8th Floor New York, NY 10001
T: 212.479.5400 F: 212.479.5444 www.langan.com
NEW JERSEY NEW YORK CONNECTICUT PENNSYLVANIA OHIO VIRGINIA WASHINGTON, DC FLORIDA NORTH DAKOTA CALIFORNIA
ABU DHABI ATHENS DOHA DUBAI ISTANBUL
Langan Engineering, Environmental, Surveying and Landscape Architecture, D.P.C.
Langan Engineering and Environmental Services, Inc.
Langan CT, Inc.
Langan Canada Inc.
Collectively known as Langan

Project

RIVERSIDE CENTER: BUILDING 1

BLOCK No. 1171, LOT No. 154 & 156
MANHATTAN
NEW YORK NEW YORK

Drawing Title

SUBSURFACE PROFILE C-C' & D-D'

Project No. 170275401		Drawing No. 10
Date 02/20/2015		
Scale 1" = 20'		
Drawn By JSH	Checked By JD	
Submission Date 02/20/2015		Sheet 10 of 12

© 2015 Langan

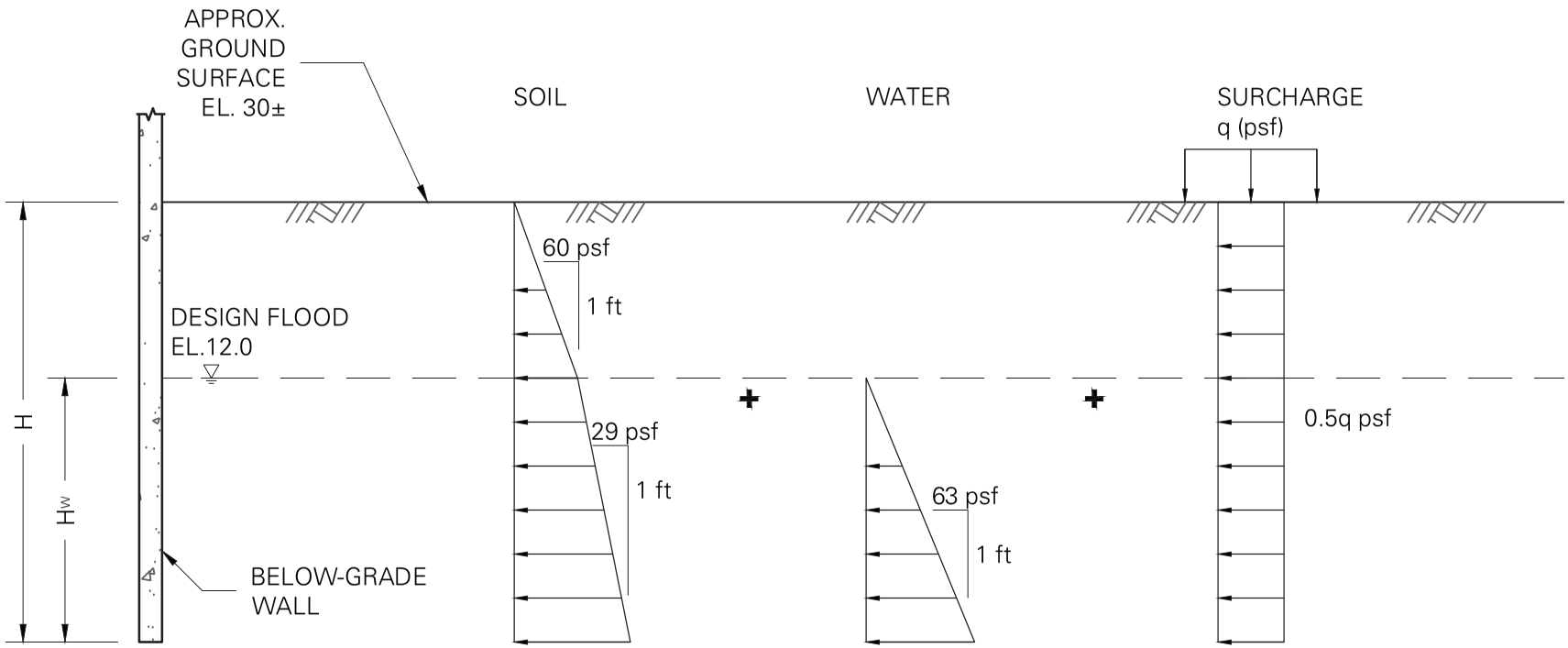

LEGEND:

H = HEIGHT OF BELOW GRADE WALL (FT)
H_W = DEPTH TO DESIGN FLOOD ELEVATION (FT)

NOTE: TO BE USED ON NORTH SIDE OF SITE WHERE DESIGN FLOOD ELEVATION (DFE) IS BELOW GROUND SURFACE ELEVATION

LANGAN
21 Penn Plaza, 360 West 31st Street, 8th Floor
New York, NY 10001
T: 212.479.5400 F: 212.479.5444 www.langan.com
Langan Engineering, Environmental, Surveying and Landscape Architecture, D.P.C.
Langan Engineering and Environmental Services, Inc.
Langan International LLC
Collectively known as Langan

Project
RIVERSIDE CENTER: BUILDING 1
BLOCK No. 1171, LOT No. 154 & 156
MANHATTAN
NEW YORK NEW YORK

Drawing Title
LATERAL EARTH PRESSURE DIAGRAM (DFE ABOVE GRADE)

Project No. 170275401	Drawing No. 11A
Date 02/20/2015	
Scale 1" = 500'	
Drawn By JSH	
Submission Date 02/20/2015	Sheet 11 of 12

© 2013 Langan

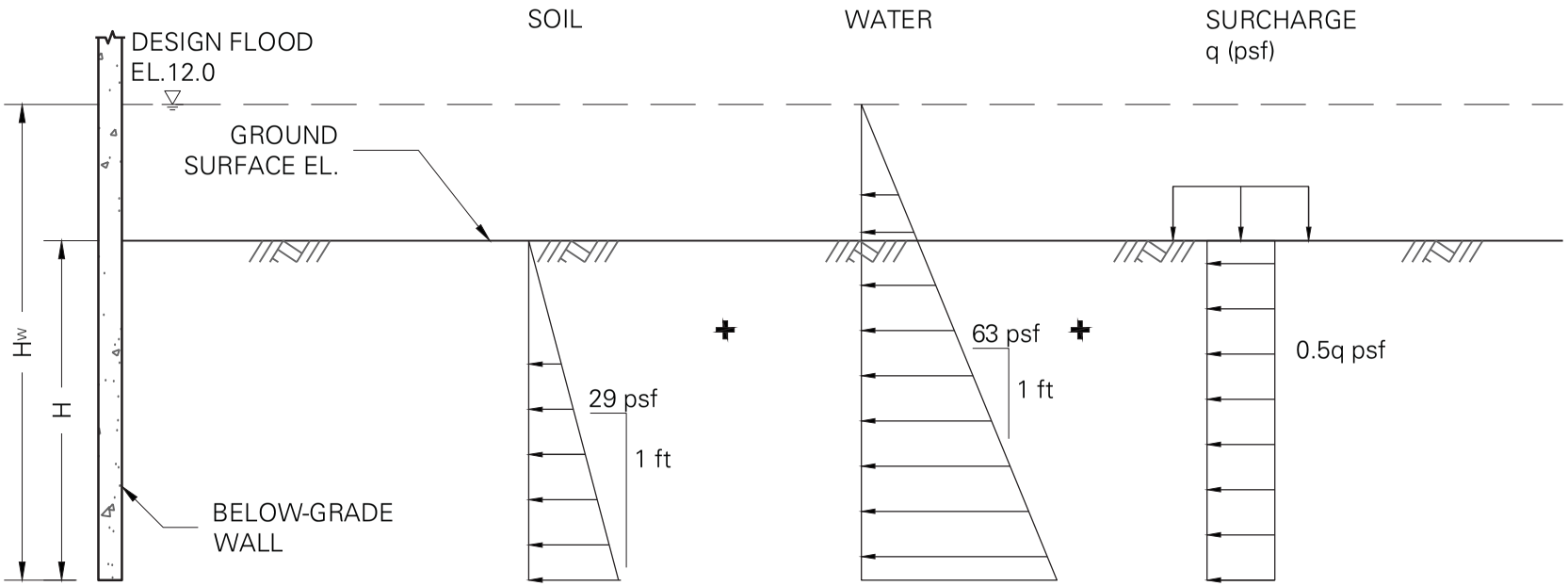

LEGEND:

H = HEIGHT OF BELOW GRADE WALL (FT)
H_W = DEPTH TO DESIGN FLOOD ELEVATION (FT)

NOTE: TO BE USED ON WEST SIDE OF SITE WHERE DESIGN FLOOD ELEVATION (DFE) IS ABOVE GROUND SURFACE ELEVATION

LANGAN
21 Penn Plaza, 360 West 31st Street, 8th Floor
New York, NY 10001
T: 212.479.5400 F: 212.479.5444 www.langan.com
Langan Engineering, Environmental, Surveying and Landscape Architecture, D.P.C.
Langan Engineering and Environmental Services, Inc.
Langan International LLC
Collectively known as Langan

Project
RIVERSIDE CENTER: BUILDING 1
BLOCK No. 1171, LOT No. 154 & 156
MANHATTAN
NEW YORK NEW YORK

Drawing Title
LATERAL EARTH PRESSURE DIAGRAM (DFE BELOW GRADE)

Project No. 170275401	Drawing No. 11B
Date 02/20/2015	
Scale 1" = 500'	
Drawn By JSH	
Submission Date 02/20/2015	Sheet 12 of 12

© 2013 Langan

APPENDIX A

HISTORIC BORING INFORMATION

LANGAN

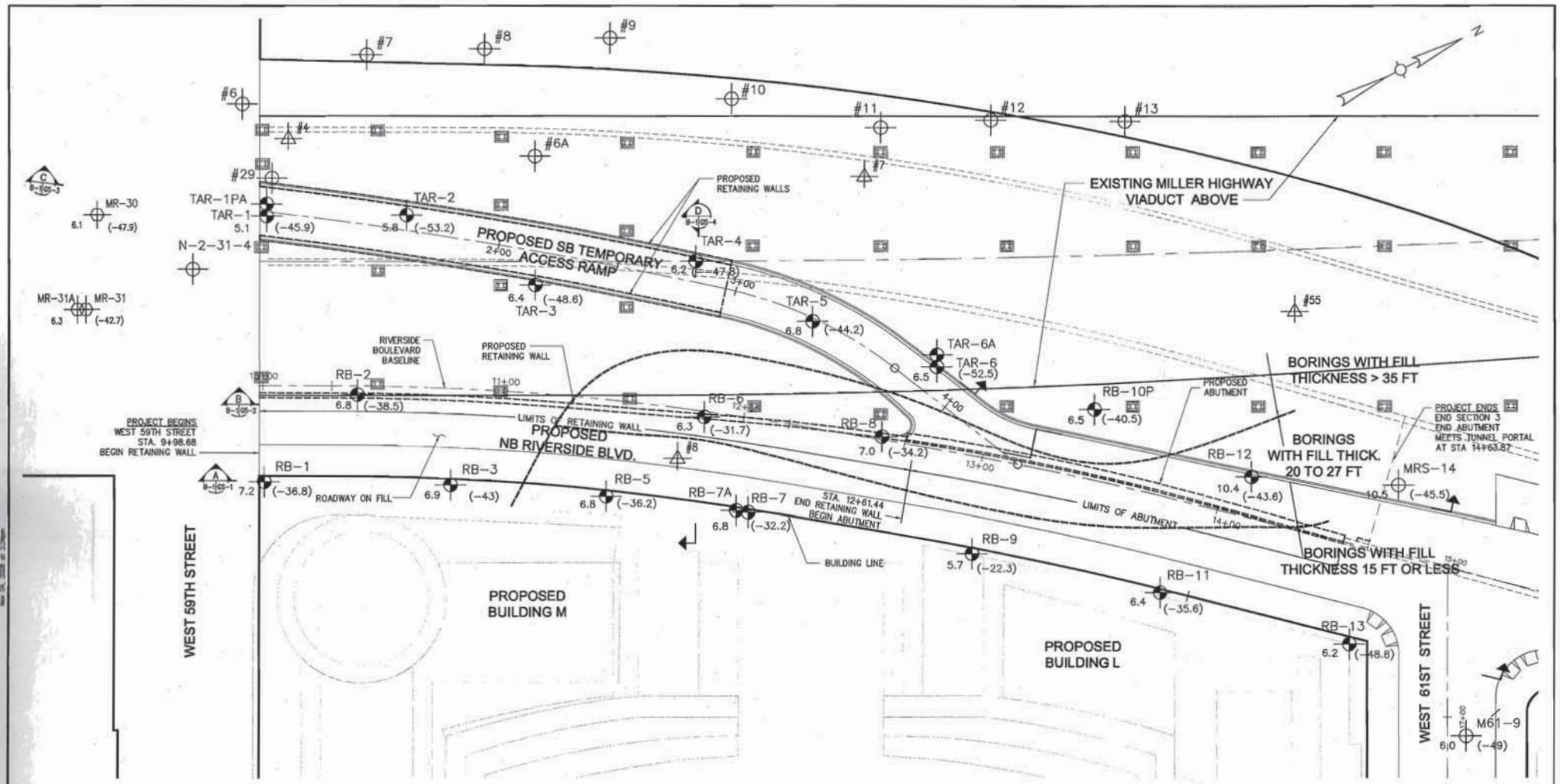

GENERAL NOTES:

1. BASE PLAN PROVIDED BY PHILIP HABIB & ASSOCIATES.
2. ALL ELEVATIONS HEREIN REFER TO BOROUGH PRESIDENT OF MANHATTAN DATUM WHICH IS 2.75 FEET ABOVE MEAN SEA LEVEL (M.S.L.) AT SANDY HOOK, NEW JERSEY, IN 1929.
3. PROJECT BORING LOCATIONS AND GROUND SURFACE ELEVATIONS ARE BASED ON OCTOBER 22, 2007 SURVEY BY MANHATTAN SURVEYING.
4. PROJECT BORINGS WERE MADE BY TESTWELL LABS, INC, BETWEEN NOVEMBER 2, 2007 AND JANUARY 7, 2008, UNDER CONTINUOUS INSPECTION OF MRCE. ALL BORINGS WERE MADE IN ACCORDANCE WITH STANDARD SPECIFICATIONS FOR SUBSURFACE BORINGS AND SAMPLING BY MRCE.
5. FOR GEOLOGIC SECTIONS A TO D SEE DRAWINGS NOS. GS-1 TO GS-4. FOR CONTOUR PLAN OF TOP OF ROCK ELEVATIONS SEE DRAWING NO. R-1.
6. NOTES FOR GEOLOGIC SECTIONS AND GENERAL STRATA DESCRIPTIONS ARE SHOWN ON DRAWING NO. GS-1.
7. ORIGINALLY PLANNED BORING RB-4 WAS NOT DRILLED DUE TO SITE OBSTRUCTIONS.
8. GROUND SURFACE ELEVATIONS AND TOP OF BEDROCK ELEVATIONS ARE SHOWN FOR MRCE BORINGS ONLY.

LEGEND:

RB-10P — PIEZOMETER
6.5 (-40.5) — PROJECT BORING
6.5 — TOP OF BEDROCK ELEVATION (IN FEET) (NYC CLASS 4-65 OR BETTER)
(-40.5) — GROUND SURFACE ELEVATION (IN FEET)
#7 #8 MR-31 — PREVIOUS BORING (SOME BY MRCE)

GRAPHIC SCALE
20' 10' 0 20' 40'

RIVERSIDE SOUTH
RIVERSIDE BLVD. W59 ST. to W61 ST.
NEW YORK NY

EXTELL/CRP
NEW YORK NY

MUESER RUTLEDGE CONSULTING ENGINEERS
14 PENN PLAZA – 225 W. 34TH STREET, NY, NY 10122

SCALE	MADE BY C.P.J.	DATE 02-29-08	FILE NO.
GRAPHIC	CHKD BY R.A.	DATE 02-29-08	10164C

BORING LOCATION PLAN

DRAWING NO. B-1

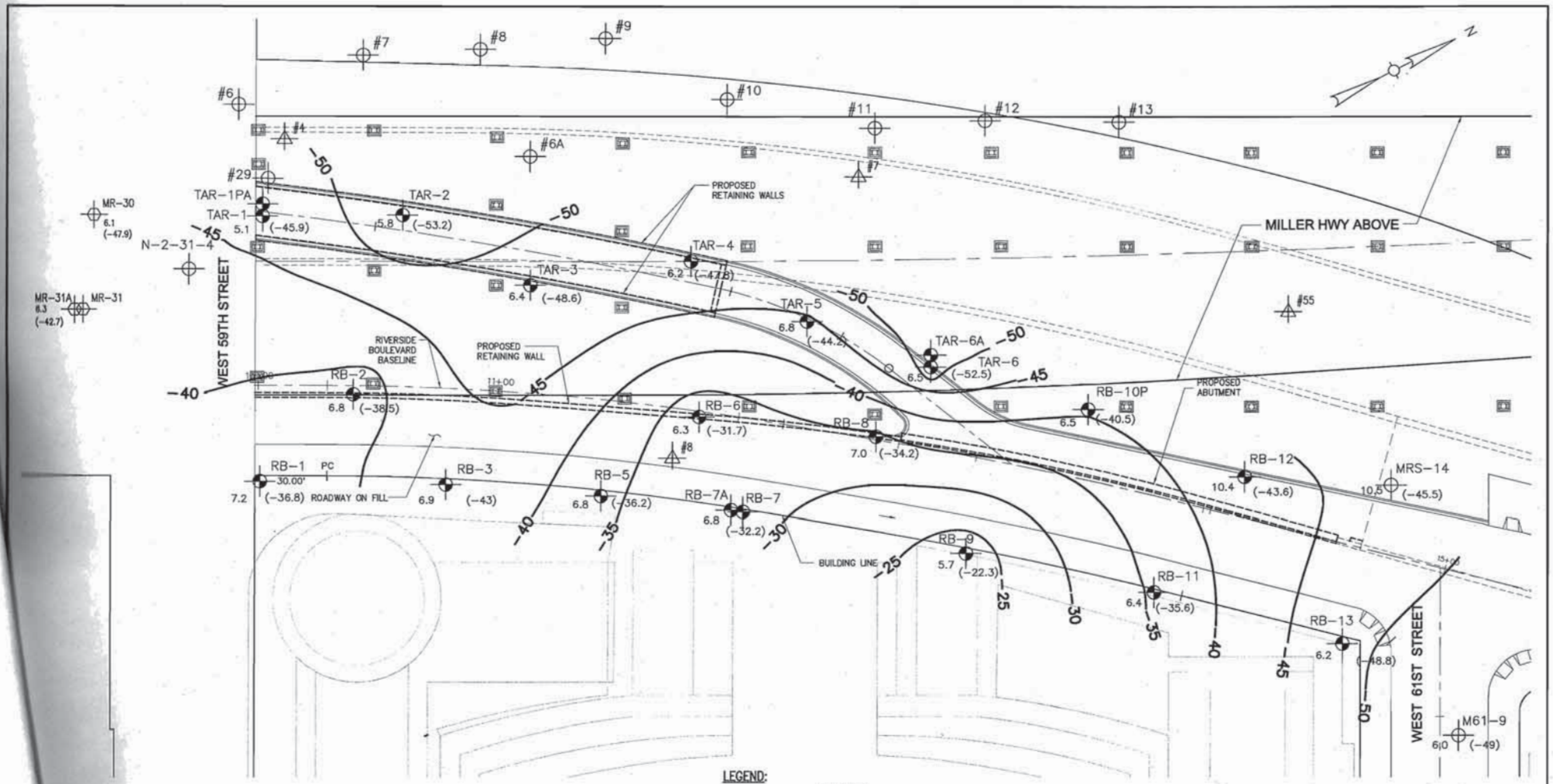

NOTES:

FOR GENERAL NOTES SEE DRAWING NO. B-1.

TOP OF BEDROCK CONTOURS ARE BASED ON SHOWN PROJECT BORINGS AND MAY OR MAY NOT REPRESENT ACTUAL SUBSURFACE CONDITIONS.

LEGEND:

RB-10P — PIEZOMETER

6.5 (-40.5) — PROJECT BORING

TOP OF BEDROCK (NYC CLASS 4-65 OR BETTER) ELEVATION (IN FEET)

GROUND SURFACE ELEVATION (IN FEET)

#7 #8 MR-31 — PREVIOUS BORING

55 — CONTOUR OF TOP OF BEDROCK ELEVATION (IN FEET)

GRAPHIC SCALE

20' 10' 0 20' 40'

RIVERSIDE SOUTH
RIVERSIDE BLVD. W59 ST. to W61 ST.
NEW YORK NY

EXTELL/CRP
NEW YORK NY

MUESER RUTLEDGE CONSULTING ENGINEERS
14 PENN PLAZA – 225 W. 34TH STREET, NY, NY 10122

SCALE	MADE BY C.P.J.	DATE 02-29-08	FILE NO.
GRAPHIC	CHKD BY R.A.	DATE 02-29-08	10164C

TOP OF BEDROCK CONTOUR PLAN

DRAWING NO. R-1

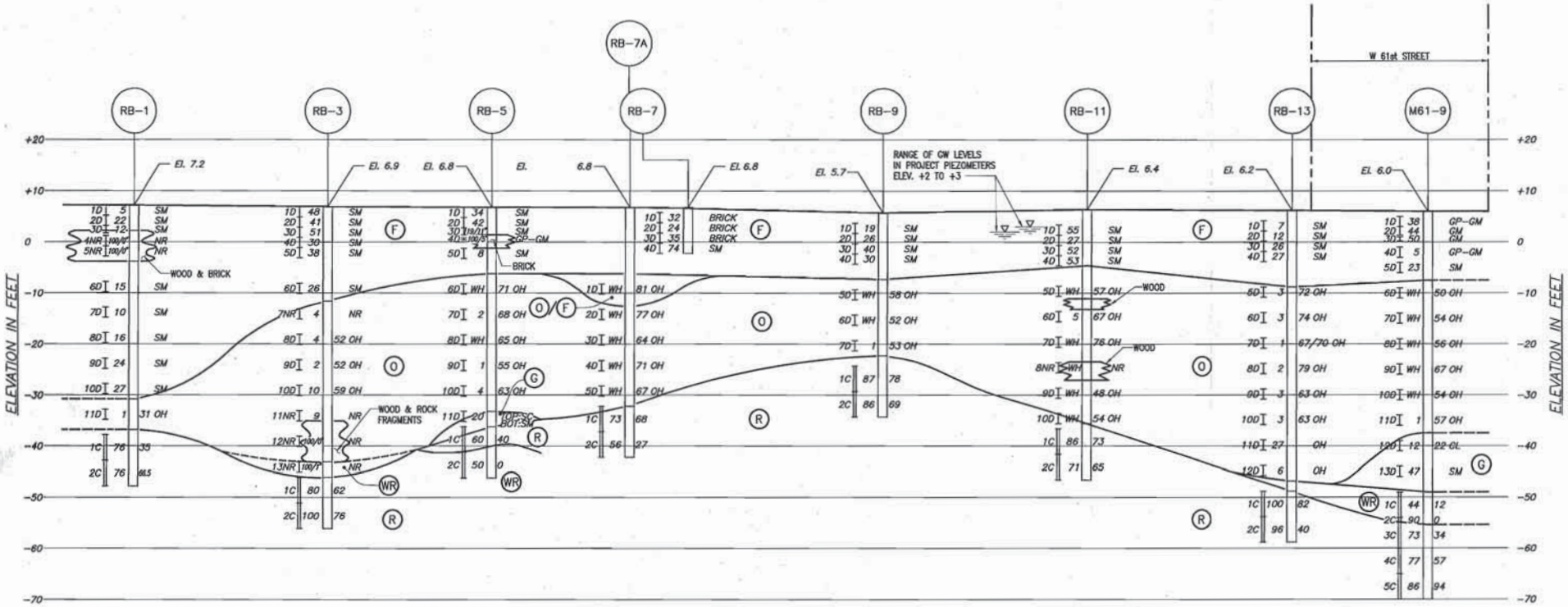

GENERAL STRATA DESCRIPTIONS:

- (F) FILL
- (O) ORGANIC SILTY CLAY
- (G) GRANULAR DEPOSITS
- (DR) DECOMPOSED ROCK
- (WR) WEATHERED ROCK
- (R) BEDROCK

GEOLOGIC SECTION NOTES:

1. FOR GENERAL NOTES AND BORING LOCATION PLAN SEE DRAWING NO. B-1.
2. BORINGS ILLUSTRATED ON GEOLOGIC SECTIONS ARE IN SOME CASES PROJECTED TO THE SECTION AND/OR OFFSET FOR CLARITY. STRATIFICATIONS SHOWN ON GEOLOGIC SECTIONS ARE BASED ON BORINGS AND ARE NECESSARY INTERPOLATIONS BETWEEN AND BEYOND BORINGS AND MAY NOT REPRESENT ACTUAL SUBSURFACE CONDITIONS.
3. SEE DRAWING NO. GS-R FOR BORING LEGEND AND SUMMARY OF UNIFIED SOIL CLASSIFICATION SYSTEM.
4. DRILLING MUD LEVELS MEASURED IN BORINGS MAY NOT REPRESENT ACTUAL GROUNDWATER LEVELS AND ARE NOT SHOWN ON SECTIONS. SEE PIEZOMETER LEVELS FOR ACTUAL GROUNDWATER LEVELS.
5. FOR COMPLETE SOIL SAMPLE AND ROCK CORE DESCRIPTIONS SEE BORING LOGS IN APPENDIX A.
6. ELEVATIONS ARE IN FEET AND REFER TO BOROUGH PRESIDENT OF MANHATTAN DATUM WHICH IS 2.75 FEET ABOVE M.S.L. AT SAND HOOK, NJ IN 1929.
7. CONCRETE, ASPHALT OR GRAVEL AT GRADE NOT SHOWN ON SECTIONS. SEE BORING LOGS FOR DETAILS.
8. SEE DRAWING NO. RC-1 FOR ROCK CORE CLASSIFICATION CRITERIA.

GRAPHIC SCALES

HORIZONTAL: 40' 20' 0 40' 80'

VERTICAL: 10' 5' 0 10' 20'

RIVERSIDE SOUTH
RIVERSIDE BLVD. W59 ST. to W61 ST.
NEW YORK NY

EXTELL/CRP
NEW YORK NY

MUESER RUTLEDGE CONSULTING ENGINEERS
14 PENN PLAZA – 225 W. 34TH STREET, NY, NY 10122

SCALE	MADE BY C.P.J.	DATE 02-29-08	FILE NO. 10164C
GRAPHIC	CH'KD BY R.A.	DATE 02-29-08	DRAWING NO. GS-1

GEOLOGIC SECTION A-A

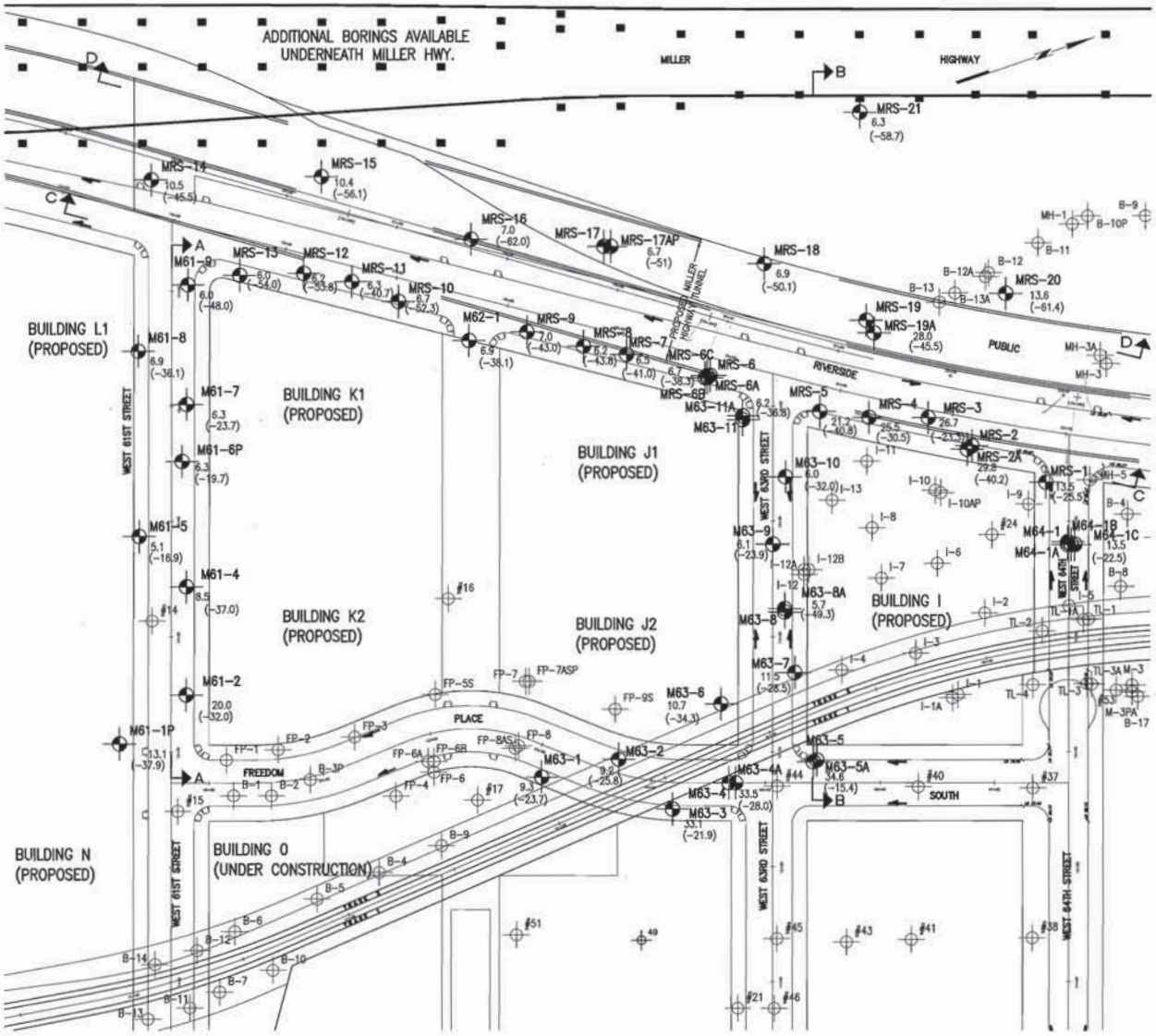

NOTES:

1. BASE PLAN PROVIDED BY RBA GROUP AND PHA ASSOCIATES.
2. ELEVATIONS ARE IN FEET AND REFER TO BOROUGH PRESIDENT OF MANHATTAN DATUM, WHICH IS 2.75 FEET ABOVE M.L.S. AT SANDY HOOK, NJ IN 1929.
3. BORING LOCATIONS AND GROUND SURFACE ELEVATIONS HAVE BEEN DETERMINED BY NYS LICENSED LAND SURVEYOR.
4. BORINGS WERE MADE BY TESTWELL LABS, INC., UNDER CONTINUOUS INSPECTION OF MRCE. ALL BORINGS WERE MADE IN ACCORDANCE WITH STANDARD SPECIFICATIONS FOR SUBSURFACE BORINGS AND SAMPLING BY MRCE.
5. FOR GEOLOGIC SECTIONS A–A THROUGH D–D SEE DRAWINGS NOS. GS–1, GS–2, GS–3 AND GS–4.
6. GENERAL NOTES FOR GEOLOGIC SECTIONS AND GENERAL STRATA DESCRIPTIONS ARE SHOWN ON DRAWING NO. GS–1.
7. GROUND SURFACE AND TOP OF WEATHERED ROCK/BEDROCK ELEVATIONS ARE SHOWN FOR PROJECT BORINGS ONLY.

LEGEND:

M63–6 — PROJECT BORINGS
9.3 (–23.7) — GROUND SURFACE ELEVATION (FT); TOP OF WEATHERED ROCK/BEDROCK ELEVATION (FT) (APPROXIMATE)
B–11 — PREVIOUS BORINGS

GRAPHIC SCALE
50' 0 50' 100'

RIVERSIDE SOUTH – INFRASTRUCTURE
NEW YORK NEW YORK

CRP/EXTELL RIVERSIDE, L.P.
NEW YORK NY

MUESER RUTLEDGE CONSULTING ENGINEERS
14 PENN PLAZA – 225 W. 34TH STREET, NY, NY 10122

SCALE	MADE BY A.H.	DATE 08–01–06	FILE NO. 10164
GRAPHIC	CH'KD BY C.L.H.	DATE 08–02–06	DRAWING NO. B–1

BORING LOCATION PLAN

Aug 08, 2006 at 5:14pm
G:\DWGS\1011\10164\963 TO WEST\GEOLOGIC SECTIONS\B-1.dwg

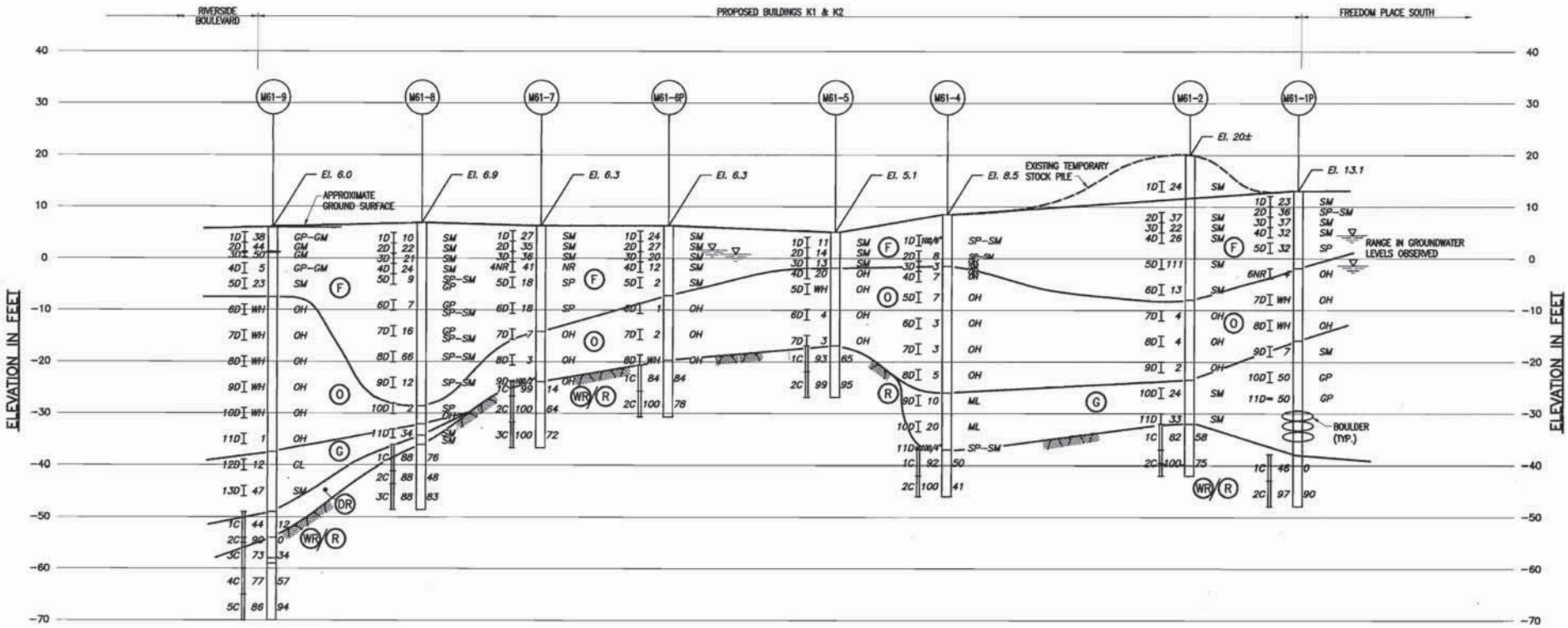

GEOLOGIC SECTION A–A

GENERAL NOTES:

1. FOR BORING LOCATION PLAN AND ITS NOTES SEE DRAWING NO. B-1.
2. BORINGS ILLUSTRATED ON GEOLOGIC SECTIONS ARE IN SOME CASES PROJECTED TO THE SECTION OR OFFSET FOR CLARITY. STRATIFICATIONS SHOWN ON GEOLOGIC SECTIONS ARE NECESSARY INTERPOLATIONS BETWEEN AND BEYOND BORINGS AND MAY NOT REPRESENT ACTUAL SUBSURFACE CONDITIONS.
3. FOR COMPLETE SOIL SAMPLE AND ROCK CORE DESCRIPTIONS SEE BORING LOGS IN APPENDIX A.
4. SEE DRAWING NO. GS-R FOR BORING LEGEND AND SUMMARY OF UNIFIED SOIL CLASSIFICATION SYSTEM. SEE DRAWING NO. RC-1 FOR ROCK CORE CLASSIFICATION CRITERIA.
5. ELEVATIONS ARE IN FEET AND REFER TO BOROUGH PRESIDENT OF MANHATTAN DATUM WHICH IS 2.75 FEET ABOVE M.S.L. AT SANDY HOOK, NJ IN 1929.
6. DRILLING FLUID LEVELS WERE MEASURED IN SOME BORINGS BUT ARE NOT SHOWN AS THEY MAY NOT REPRESENT ACTUAL GROUNDWATER CONDITIONS. REFER TO PIEZOMETER RECORDS FOR REPRESENTATIVE GROUNDWATER LEVEL OBSERVATIONS.

GENERAL STRATA DESCRIPTIONS:

(F) FILL –OLD RAILROAD YARD FILL. TYPICALLY SANDY MATERIAL WITH VARIOUS AMOUNTS OF GRAVEL AND SILT MIXED WITH MISCELLANEOUS DEBRIS.

(O) ORGANIC SILTY CLAY – FORMER RIVER BOTTOM SEDIMENTS. GENERALLY SOFT TO MEDIUM SILTY CLAY SOMETIMES INTERMIXED WITH FILL.

(G) GRANULAR DEPOSITS: ALLUVIAL AND GLACIAL DEPOSITS. COMPOSITION RANGES FROM SANDS WITH VARIOUS AMOUNTS OF SILTS AND GRAVEL, TO SANDY TO CLAYEY SILTS (INCLUDING VARVED DEPOSITS)

(DR) DECOMPOSED ROCK – TYPICALLY CONSISTS OF SAND MIXED WITH SILT AND ROCK FRAGMENTS.

(WR)/(R) ROCK MICA SCHIST TO GNEISSIC SCHIST, WITH GRANITIC INTRUSIONS OF SCHISTOSE GNEISS, GRANITE AND QUARTZ PEGMATITE. WEATHERED TO HARD.

GRAPHIC SCALES

VERTICAL: 10' 5' 0 10' 20'

HORIZONTAL: 20' 10' 0 20' 40'

RIVERSIDE SOUTH DEVELOPMENT	
NEW YORK	NEW YORK
CRP/EXTELL RIVERSIDE, L.P.	
NEW YORK	NEW YORK
MUESER RUTLEDGE CONSULTING ENGINEERS 14 PENN PLAZA – 225 W. 34TH STREET, NY, NY 10122	
SCALE: GRAPHIC	MADE BY C.P.J./A.H. DATE 08-01-05 CH'KD BY C.L.H. DATE 08-02-06
FILE NO. 10164	DRAWING NO. GS-1
GEOLOGIC SECTION A–A WEST 61st STREET	

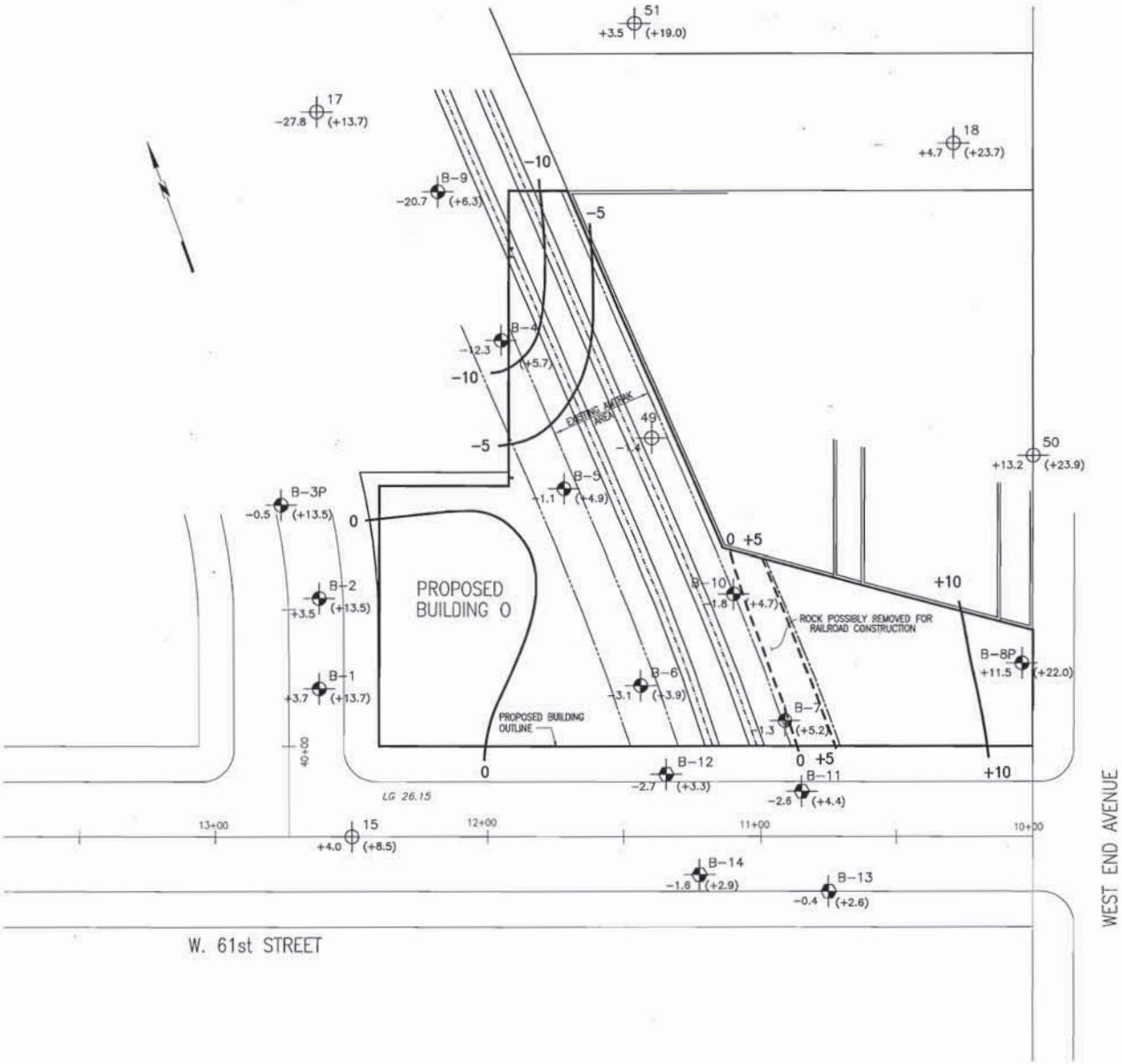

NOTES:

1. FOR GENERAL NOTES SEE DRAWING NO. B-1.

LEGEND:

B-1 — BORING NUMBER (P-PIEZOMETER)

-10.0 (+8.2) — GROUND SURFACE ELEVATION (FT); TOP OF BEDROCK ELEVATION (FT)

-10 — ELEVATION OF INTERPRETED CONTOUR OF TOP OF ROCK (WHERE CONTOUR LINE IS DASHED, ITS LOCATION IS BASED ON HISTORIC SOURCES AND IS VERY APPROXIMATE)

GRAPHIC SCALE

20' 10' 0 20' 40'

PRELIMINARY

05-26-04

RIVERSIDE SOUTH – BUILDING O

NEW YORK NEW YORK

TRUMP NEW WORLD

NEY YORK NEW YORK

MUESER RUTLEDGE CONSULTING ENGINEERS

14 PENN PLAZA – 225 W. 34TH STREET, NY, NY 10122

SCALE	MADE BY E.C.	DATE 05-26-04	FILE NO.
GRAPHIC	CHKD BY T.C.M./J.C.	DATE 05-26-04	10164

TOP OF BEDROCK CONTOUR PLAN

DRAWING NO. B-2

Mueser Rutledge
Consulting Engineers
14 Penn Plaza • 225 W. 34th Street • New York, NY 10122
Tel: (917) 339-9300 • Fax: (917) 339-9400
www.mrce.com

George J. Tamaro
Alfred H. Brand
Hugh S. Lacy
David M. Cacoilo
Joel Moskowitz
Peter W. Deming
James L. Kaufman
Partners

Peter H. Edinger
Elmer A. Richards
Edmund M. Burke
John W. Fowler
J. Patrick Powers
Consultants

Raymond J. Poletto
Roderic A. Ellman
Thomas R. Wendel
Francis J. Arland
Theodore Popoff
David R. Good
Domenic D'Argenzio
Walter E. Kaeck
Senior Associates

Robert K. Radske
Harro R. Streidt
Ketan H. Trivedi
Michael J. Chow
Alice Arana
Douglas W. Christie
Hiren J. Shah
Dong K. Chang
Anthony DeVito
Joel L. Volterra
Tony D. Canale
Frederick C. Rhyner
Jan Cermak
Associates

Joseph N. Courtade
Director of Finance and Administration

Martha J. Huguet
Marketing Manager

May 12, 2005 **CONFIDENTIAL**

The Carlyle Group
US Real Estate
1001 Pennsylvania Avenue, NW
Washington, DC 20004-2505

Attention: Mr. Avner A. Husen

Re: Review of Available Subsurface Information
Due Diligence Study
Riverside South Development - South
New York, NY
MRCE File No. 10432 (P05-147)

Gentlemen:

At your request, we have completed our review of the general subsurface information available for the referenced site. We understand that our review will provide information to be used in your due diligence study to evaluate the costs and feasibility of the site development. This letter summarizes our interpretation of the site's general subsurface conditions and provides geotechnical recommendations for the proposed development.

PROJECT DESCRIPTION

The Riverside South Development project is a high-rise residential development on the site of the former New York Central Railroad Yard on the west side of Manhattan, New York City. The development extends from West 59th Street to West 72th Street, between West End Avenue and the Hudson River. The elevated Miller Highway structure traverses the west side of the site.

The northern portion of the development above West 65th Street including Buildings A through G has been mostly completed. The southern portion of the development, south of West 65th Street, is either under construction (Building O) or planned. Building H between West 64th Street and West 65th Street, W64th Street Bridge and W61st Bridge have already been designed. Sheets Nos. 1 through 5 show the project area between West 59th Street and West 64th Street.

Similarly to the northern portion, development of the development's southern portion will include construction of new high-rise structures (Building H through N), extending the city street grid west of West End Avenue to meet the proposed Riverside Boulevard, and, possibly, developing a park west of the high-rise buildings. The existing grades north of West 59th Street are up to about 25 feet lower than the proposed street grid. Hence, the new street will need to be supported either on earth fill or be constructed as an elevated structure.

We understand that you may decide to construct the Miller Highway tunnel underneath the proposed Riverside Boulevard or a portion of it as part of your development. The tunnel is planned by New York State Department of Transportation.

Ground surface elevations within the site generally range between about Elev. +5 and Elev. +15. All elevations herein refer to Borough President of Manhattan (City) Datum which is 2.75 feet above Mean Sea Level (M.S.L.) at Sandy Hook, New Jersey.

BRIEF SITE HISTORY

Most of the site was previously occupied by railroad tracks and railroad yard structures. The 1899 Robinson's Atlas and 1916 Bromley's Land Book (Sheet No 2) indicate extensive trackage within the site. Aside from numerous one-story structures north of West 60th Street, a three-story hotel was located north of West 61st Street as shown on Sheet No.2. Mostof the tracks dead ended at West 60th Street and the block between West 60th Street and West 59 was developed. Building on that block included industrial warehouses up to six-story high some with basements. An above grade portion of the up to three-story Stock Pens warehouse on that block still remains at the site.

Through the 20th century, the layout of the railroad trackage changed. For instance, the 1956 Bromley's Land Book (Sheet No. 3) shows that the structures north of West 60th street were by that time demolished and new tracks with platforms were constructed in their place. Some of the buildings south of West 60th Street were also demolished.

At present, the Amtrak Empire Corridor easement with two active tracks along the eastern edge of the site is the remnant of the original railroad trackage. Building N will need to span the existing Amtrak Empire Corridor tracks and future light-rail easement to the west of the tracks.

Recently, most of the site has been used for parking and temporary stockpiling of fill materials. We assume that any existing structures at the southern protion of the site will be demolished.

SUMMARY OF GEOLOGIC CONDITIONS

The site lies on the west border of a resistant ridge of the bedrock forming the backbone of Manhattan. Most pre-glacial soils in this area were removed during a succession of glacial ice advances that swept across southeastern New York State. The remaining soils are of recent origin, and date their deposition to the last glacial period, the Wisconsin, which ended about 12,000 years ago.

A significant portion of the site lies west of the pre-colonial shoreline of the Hudson River. The railroad yard previously present over most of the site to the west of the pre-colonial shoreline is all filled land. The 1874 Viele Map (Sheet No. 4) shows the location of the pre-colonial shoreline and land features present within the site area. Note the presence of a stream between West 60th Street and West 61st Street. The original shoreline is also shown on Sheet No. 1. Shorelines shown on Sheets Nos. 1 and 4 do not necessarily coincide with each other as they were obtained from different sources. Mapping at the time the shorelines were mapped was rather rough.

The Rock Data Map of Manhattan included data from borings drilled within the site in the 1930's. Additionally, our in-house files contain more recent boring information from investigations performed as a part of the Riverside South development and other nearby investigations.

General soil conditions at the site consist of a surficial layer of fill covering irregular deposits of organic silty clay and glacial granular deposits underlain by bedrock. Some previous borings encountered a layer of decomposed rock overlying bedrock. Boulders may be encountered within the glacial deposits. The old railroad yard fill is a sandy material locally mixed with miscellaneous debris (such as cinders, fragments of concrete, brick, wood, and glass). The portions of the fill layer below the groundwater table are often loose due to the method of fill placement. The lower, loose fill was dumped into water, while the upper fill was deposited above water table and benefitted from railroad construction and compaction. The lower fill may be susceptible to liquefaction during an earthquake. It is possible that remnants of former structures, including foundations, tracks and old utilities are buried in the fill.

The organic silty clay deposits are the former river bottom sediments that now underlie the fill. This stratum typically is typically a soft to medium silty clay and is highly compressible. After placing the fill, the river sediments compressed, and in some areas displaced under the weight of fill. Fill materials sometimes intermixed with or penetrated into the organic deposits which may explain why some previous borings did not encounter the organic layer. Typically, the organic deposits are present west of the original shoreline and their thickness increases westwards. Near the elevated Miller highway structures the stratum may be as much as 50 feet thick.

The glacial deposits consist of the former glacial lake bottom deposits and glacial till deposits. The composition ranges from sandy and clayey silts to sand, with various amounts of silt and mica and traces of rock fragments. Boulders may be present within the glacial layer.

The bedrock encountered in previous borings typically consists of mica and gneissic schist, with granitic intrusions of schistose gneiss, granite and quartz pegmatite. The hardness of the rock ranges from weathered to hard, typically improving with depth except at boundaries of granitic intrusions. A discontinuous layer of decomposed rock may be present above the bedrock. The top of bedrock surface slopes down westerly toward the Hudson River with elevations sloping from about Elev.0 to Elev.-60 across the site as indicated on a contour plan on Sheet No. 5.

Based on groundwater observations in the area, typical groundwater levels in the soil west of the Amtrak easement range from about Elev. -2 to Elev. +4. The groundwater levels are influenced by the sloping bedrock surface and distance from the Hudson River. Excavations in the western portion of the site may encounter groundwater higher typically at about the top of bedrock surface.

Our review of the recent flood insurance rate map for the site indicates the 100-year flood level in the area is at Elev. +7.25.

GEOTECHNICAL AND FOUNDATION ISSUES

We anticipate that geotechnical issues and foundation systems for future development at the site will be similar to those of the completed northern portion of the development:

Buildings

- ***Foundations*** Due to the presence of miscellaneous fill and organic deposits we anticipate that most of the proposed buildings will be supported on piles driven to bedrock. The glacial deposits, if present, are typically too thin to provide adequate bearing. Typically, driven steel H-piles or pipe piles provide the most economical foundation system. The design of driven piles should consider possible obstructions to driving (i.e., obstructions in fill, boulders in glacial deposits, and decomposed and weathered rock layers). Heavier pile sections with driving tips will likely be required. Liquefaction of lower loose fill may need to be considered in the investigation of lateral pile capacities. The presence of cinders and possible stray currents may lead to corrosion of steel foundations. Hence, measures should be taken to account for corrosion in the pile design.

  Where bedrock is near ground surface at the southeast corner of the site (the east portion of Building N), shallow foundations or pier bearing directly on bedrock

may be used. Shallow foundations in other areas will be feasible only if deep basements are constructed.

- ***Basements*** The buildings completed have typically one basement below the raised street grid but typically above the groundwater table. If more than one basement is needed, excavation below groundwater table may be required. Such an excavation would require an adequate excavation support system combined with construction dewatering. Contamination of fill and groundwater will need to be considered. Also, extensive dewatering may cause increase in overburden stresses leading to consolidation of the organic stratum and ground settlement. Ground settlement may induce undesirable down-drag forces on any adjacent existing piles.

- **Buildings N and M** Building N at the southeast corner of the site will need to span the existing Amtrak and light rail easements similarly to the existing buildings to the north. The rail easements will restrict the size of foundations used.

  Some of the former structures within the footprint of Buildings N and M had basement space. It is not clear if the basements were filled in or not. Any remnants of the basement structures may obstruct installation of new foundation. On the other hand, if they are not filled in they may be incorporated into the new structure.

  The effect of the new foundation installation and loading conditions on the Amtrak tracks and Miller Highway piers will need to be considered.

Park Development West of Buildings and New Streets

As part of the development West 61st Street, West 63rd Street, and 64th Street will be extended west of West End Avenue to the new Riverside Boulevard Extension (Sheet No. 1). Additionally, Freedom Place South between West 63rd Street and West 61st Street will be constructed. West of the new buildings and Riverside Boulevard, a park may be constructed with a side slope from the street level to the existing grade near Miller Highway as shown on Sheet No. 6. A tunnel or a portion of a tunnel may be built below Riverside Boulevard within the park embankment. Schematic sections through the new park fill with and without the tunnel are shown on Sheet No. 6.

The new streets and park will need to match elevations of the existing street grid and will be up to about 30 feet above the existing grade at W 65th Street. Southwards, the difference between

the existing grade and adjacent street decreases (e.g., it is about 15 feet at West 61st Street). At the southern end of the site, the proposed Riverside Boulevard will descend and meet the existing W 59th Street under the elevated Miller Highway structure.

As a result of the grade differences, the new streets and park will either have to be supported on new fill placed on top of the existing grade or supported on an elevated concrete or steel structure.

New Fill Embankment Assuming the original shoreline coincides with the easternmost limit of the compressible organic stratum, all new streets to the east of that line can be supported on fill placed directly over the existing grade. To the west of the shoreline, where compressible organic stratum is present, new fill placed directly over the existing grade would likely induce consolidation of the organic soil and potentially cause significant ground settlement. In addition to ground settlement, new fill placed near the Miller Highway structure may induce lateral consolidation of the subsoils leading to excessive lateral pressures on the highway foundation piers.

There are two options on how to mitigate the potential risk of ground settlement and vertical consolidation (near highway piers):

- Support the new fill on a relieving platform. This platform would be supported on piles driven to bedrock. Most of the fills for the streets and park of the completed northern portion of the development are supported on relieving platforms. West of the existing buildings the platform extends close to the toe of the park embankment slopes (Sheet No.5). As an alternative to the relieving platform other means of directly supporting the new fill may be investigated including ground improvement methods (e.g., soil-cement columns).

- At locations where the organic stratum is relatively thin (say less than 10 feet), pre-loading with surcharge fill may be employed to improve the compressibility of the organic stratum and eliminate the need for a relieving platform. The pre-loading technique consists of placing 2 to10 feet of surcharge fill on top of the proposed grade for a substantial time typically ranging from 6 to 18 months. The amount of surcharge fill and duration of pre-loading depends on the thickness and consolidation characteristics of the organic stratum If the pre-loading time need to be shorten to only several months wick drains may be installed.

  If pre-loading with surcharge fill is selected, the effect of ground settlement induced by pre-loading on adjacent structures should be considered (including downdrag forces on adjacent piles).

We trust that this letter provides information you need in the performance your due diligence study. Please, do not hesitate to contact with any further questions.

Very truly yours,

MUESER RUTLEDGE CONSULTING ENGINEERS

By:_____
Jan Cermak

By:_____
For James L. Kaufman

JC:JLK

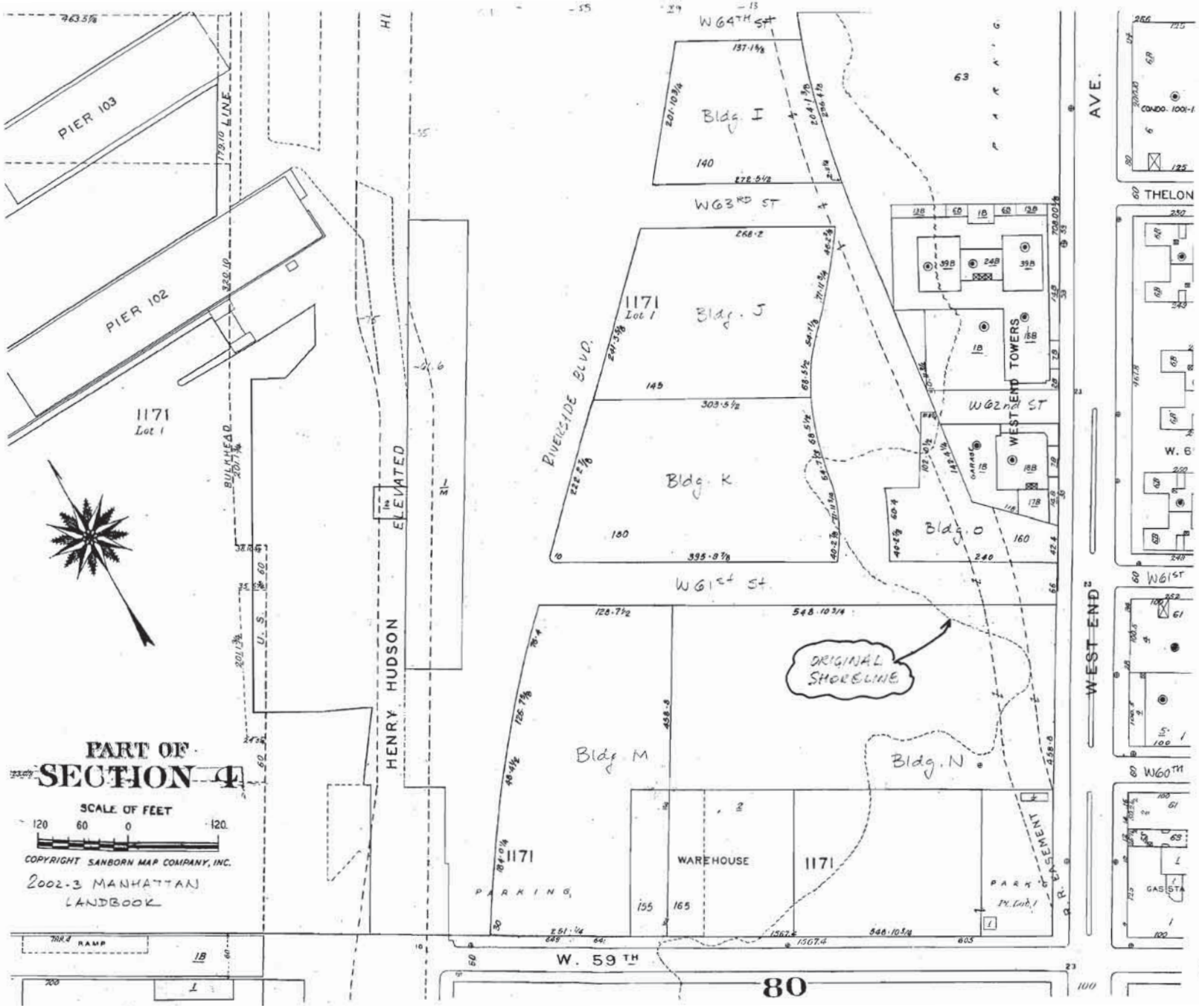
PIER 103
PIER 102
1171
Lot 1
BULKHEAD LINE
HENRY HUDSON ELEVATED
RIVERSIDE BLVD.
W 64TH ST
W 63RD ST
W 62ND ST
W 61ST ST
W. 59TH
Bldg. I
Bldg. J
Bldg. K
Bldg. M
Bldg. N
Bldg. O
WEST END TOWERS
WAREHOUSE
PARKING
ORIGINAL SHORELINE
WEST END AVE.
THELON
W. 61ST
W. 60TH
GAS STA
PART OF SECTION 4
SCALE OF FEET
120 60 0 120
COPYRIGHT SANBORN MAP COMPANY, INC.
2002-3 MANHATTAN LANDBOOK
80

Sheet No. 1

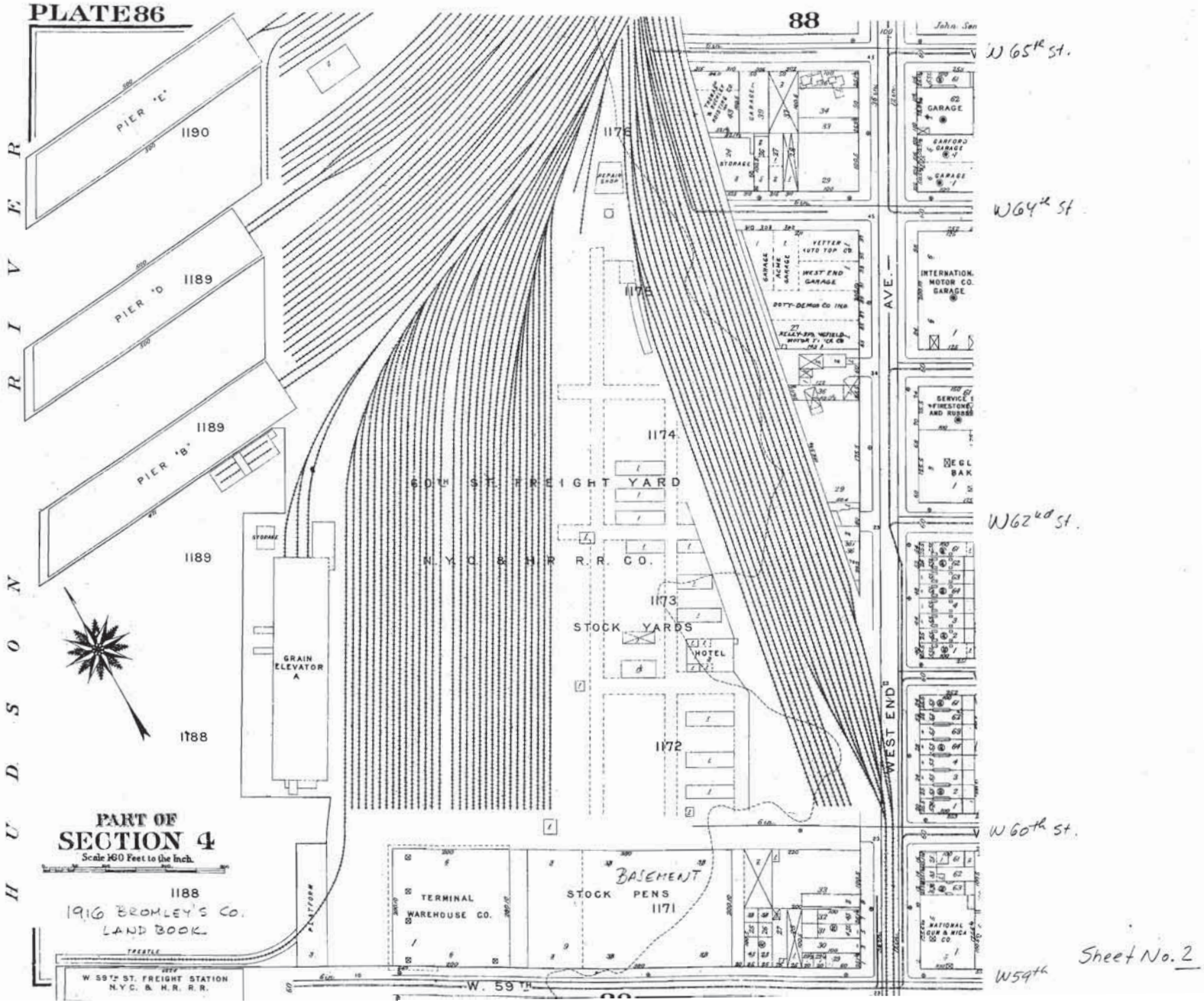
PLATE 86
88
HUDSON RIVER
PIER "C"
PIER "D"
PIER "B"
1190
1189
1189
1189
1188
1188
1178
1178
1174
1173
1172
1171
60TH ST. FREIGHT YARD
N.Y.C. & H.R. R.R. CO.
STOCK YARDS
HOTEL
GRAIN ELEVATOR A
STORAGE
REPAIR SHOP
GARAGE
STORAGE
VETTER AUTO TOP CO.
WEST END GARAGE
DOTT-DEMUS CO. INC.
INTERNATIONAL MOTOR CO. GARAGE
WEST END AVE.
TERMINAL WAREHOUSE CO.
STOCK PENS
BASEMENT
NATIONAL GUN & MICA SS CO.
W. 59TH ST.
W. 59TH ST. FREIGHT STATION N.Y.C. & H.R. R.R.
TRESTLE
PART OF
SECTION 4
Scale 160 Feet to the Inch.
1916 BROMLEY'S CO. LAND BOOK
W 65th St.
W 64th St.
W 62nd St.
W 60th St.
W 59th
Sheet No. 2

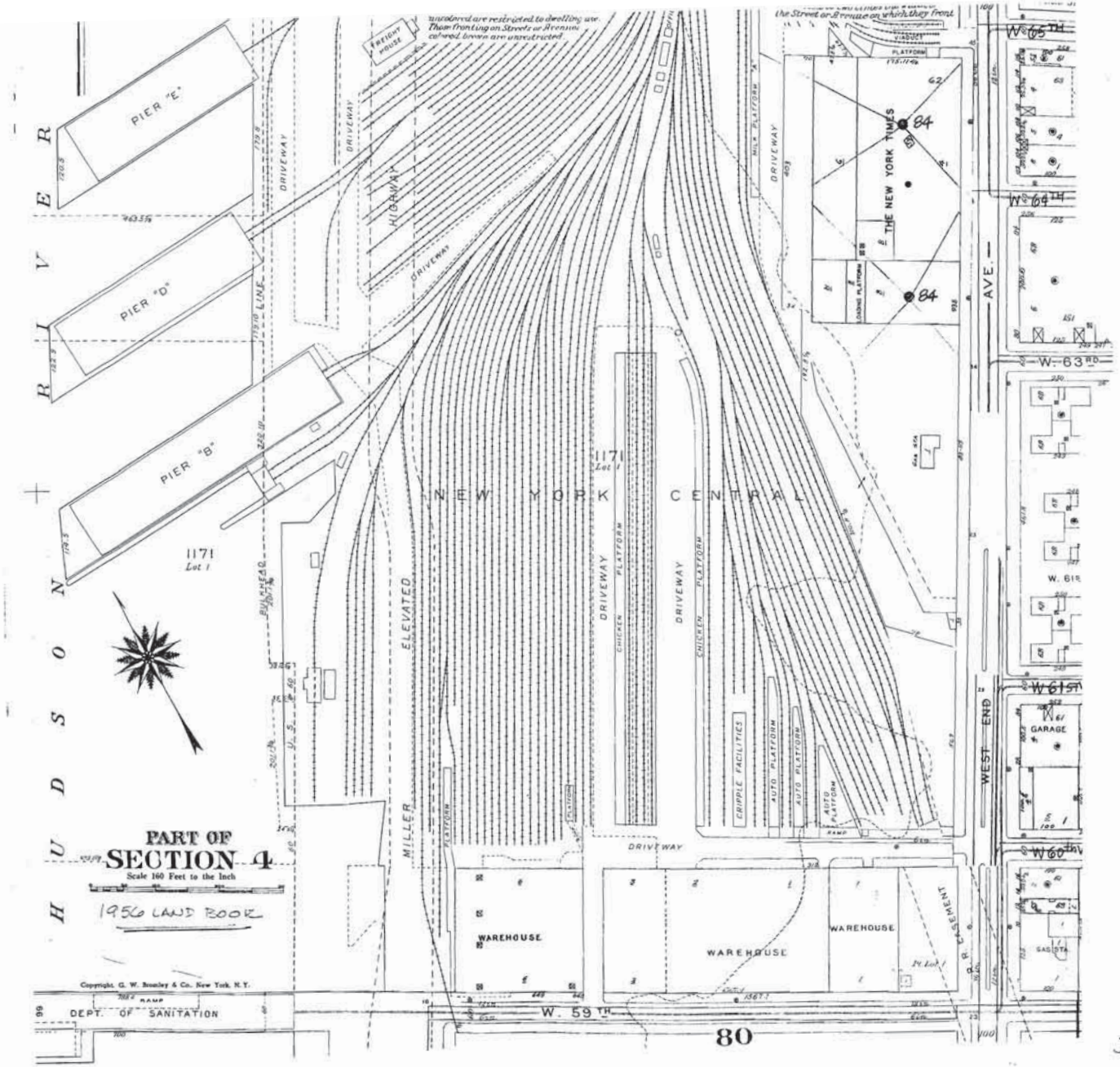
PART OF
SECTION 4
Scale 160 Feet to the Inch
1956 LAND BOOK
Copyright, G. W. Bromley & Co. New York, N.Y.
HUDSON RIVER
PIER "E"
PIER "D"
PIER "B"
DRIVEWAY
HIGHWAY
FREIGHT HOUSE
NEW YORK CENTRAL
ELEVATED
MILLER
THE NEW YORK TIMES
84
62
1171
Lot 1
DRIVEWAY
CHICKEN PLATFORM
CRIPPLE FACILITIES
AUTO PLATFORM
WAREHOUSE
GARAGE
GAS STA
WEST END AVE.
W. 65TH
W. 64TH
W. 63RD
W. 61ST
W. 60TH
W. 59TH
DEPT. OF SANITATION
80

Sheet No. 3

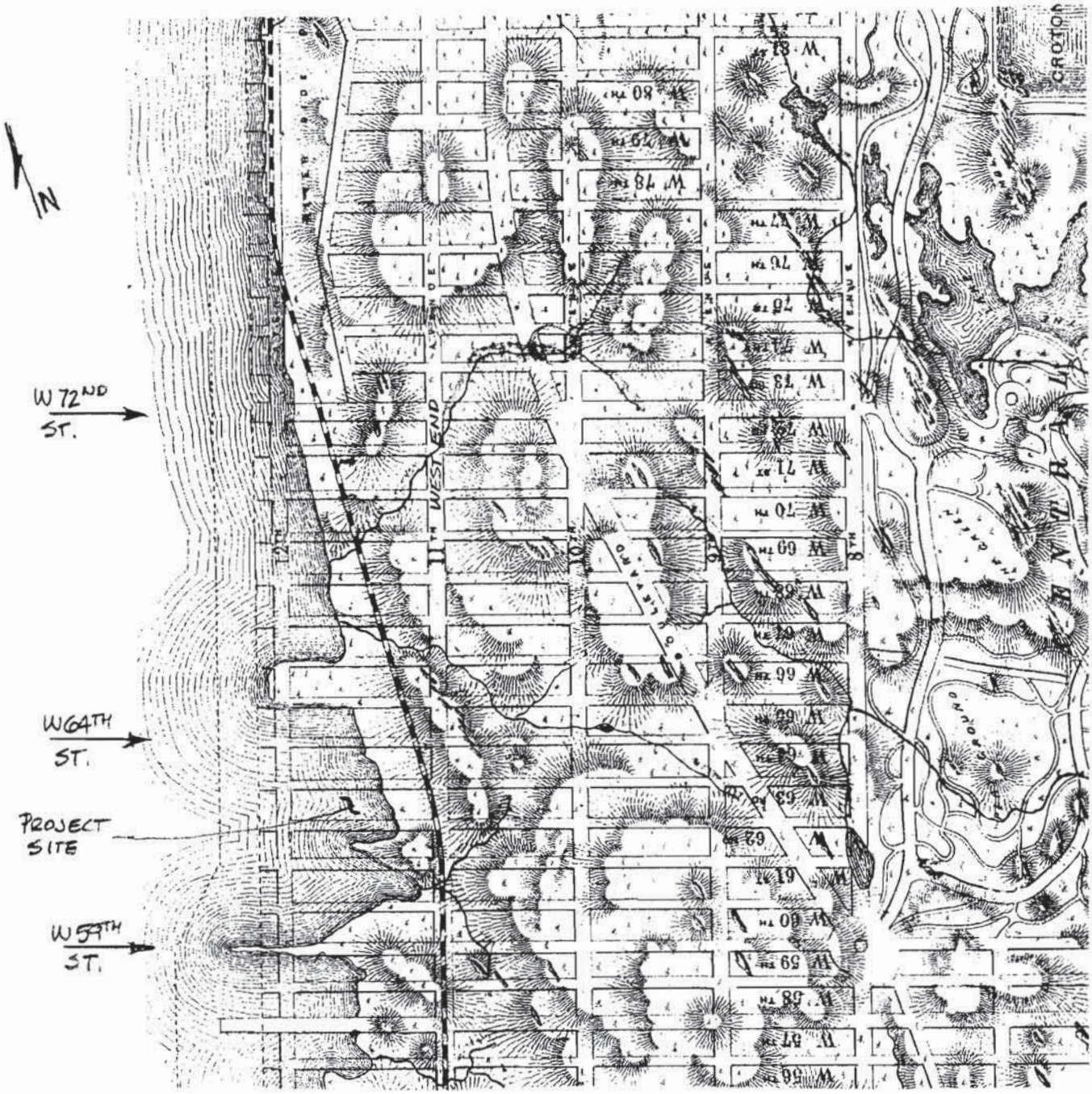

RIVERSIDE SOUTH

NEW YORK NY

MUESER RUTLEDGE CONSULTING ENGINEERS

225 West 34th Street • 14 Penn Plaza

New York, NY 10122

SCALE	MADE BY / CH'KD BY	DATE / DATE	FILE NO.
—	JC	5-05	

1874 VIELE MAP

DRAWING NO. 4

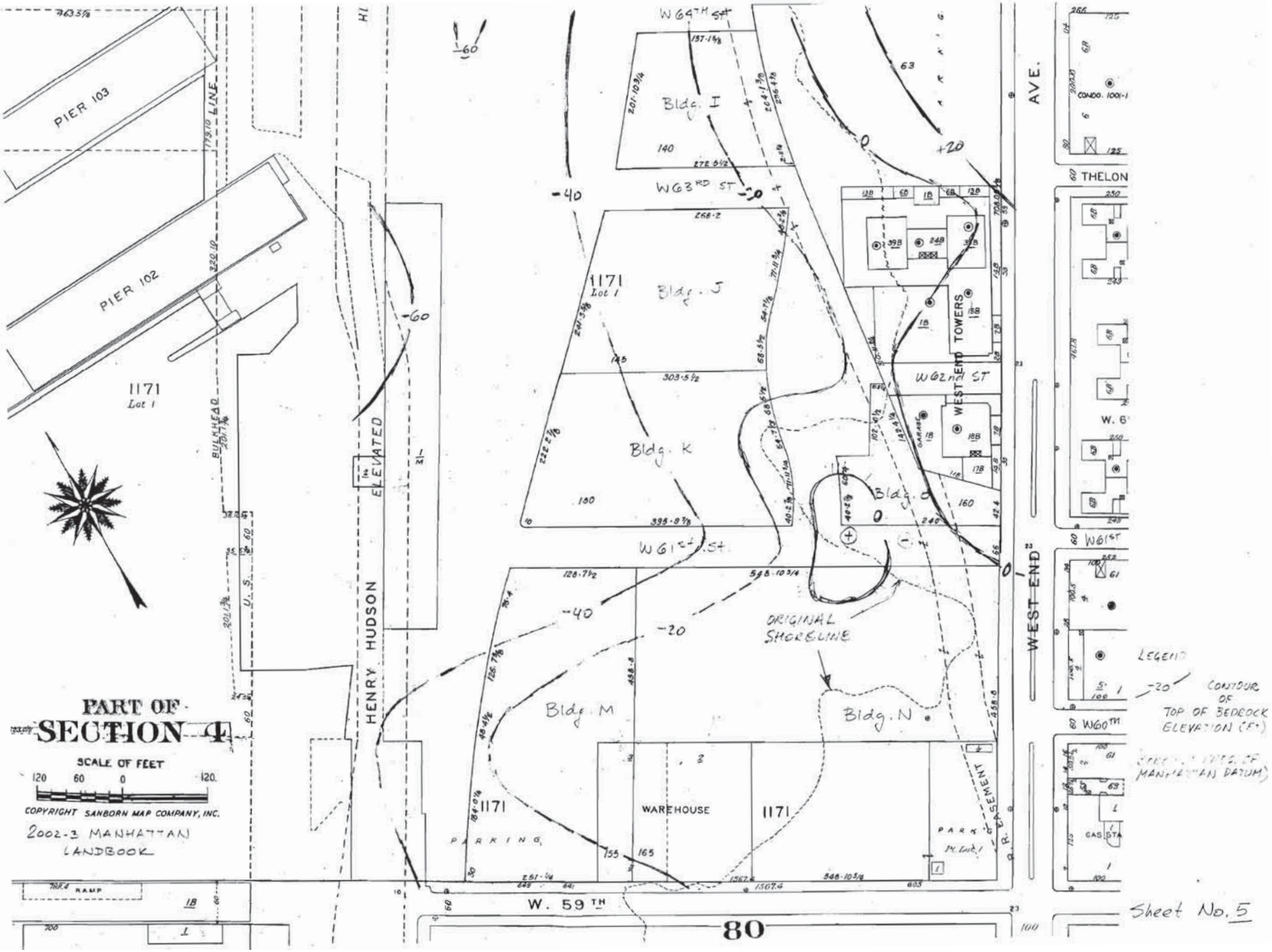
PIER 103
PIER 102
1171
Lot 1
BULKHEAD LINE
U. S.
HENRY HUDSON ELEVATED
W 64TH ST
W 63RD ST
W 62nd ST
W 61ST ST
W. 59TH
Bldg. I
Bldg. J
Bldg. K
Bldg. L
Bldg. M
Bldg. N
WEST END TOWERS
WAREHOUSE
PARKING
PARK
ORIGINAL SHORELINE
WEST END AVE.
THELON
W. 6
W 61ST
W 60TH
CONDO. 1001-1
GAS STA
RAMP
80
PART OF SECTION 4
SCALE OF FEET
120 60 0 120.
COPYRIGHT SANBORN MAP COMPANY, INC.
2002-3 MANHATTAN LANDBOOK
LEGEND
-20 CONTOUR OF TOP OF BEDROCK ELEVATION (FT)
(FEET ABOVE OR BELOW MANHATTAN DATUM)
Sheet No. 5

RIVERSIDE SOUTH - W 66TH STREET

(a) Typical Section without Tunnel (NTS)

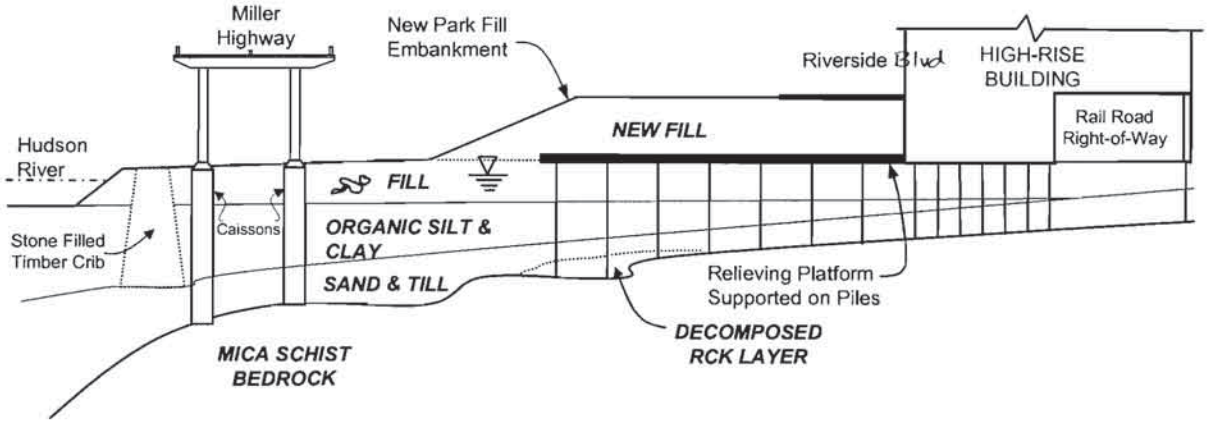

(b) Typical Section with Tunnel (NTS)

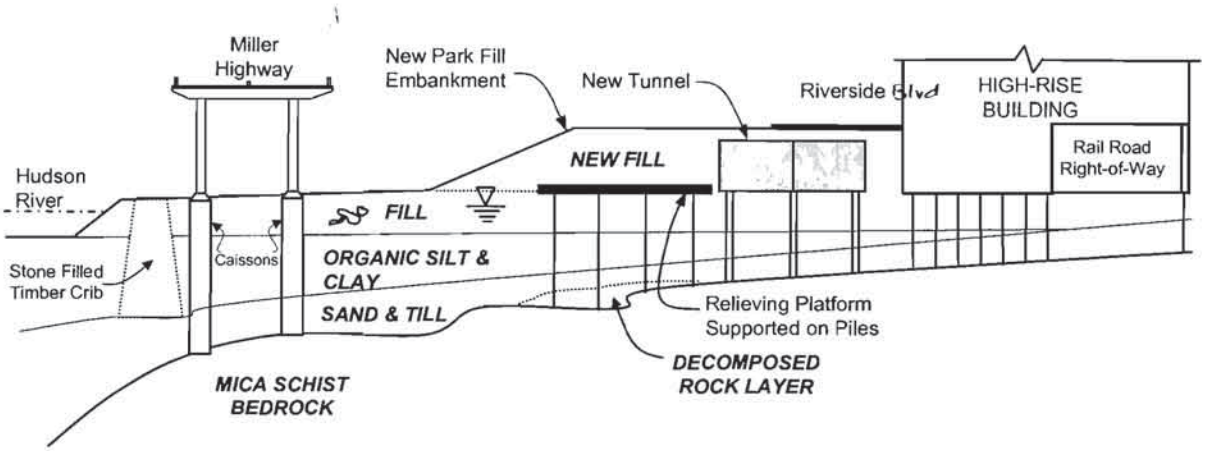

MRCE
5/6/05

Sheet No. 6

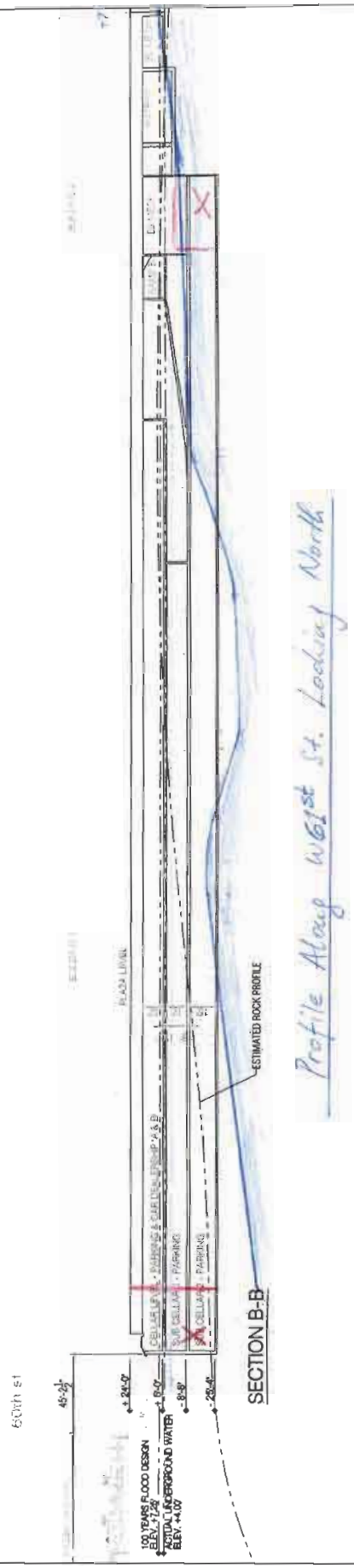

Not to Scale

WSP CANTOR SEINUK
STRUCTURAL ENGINEERS

228 EAST 45TH STREET NEW YORK, NEW YORK 10017
TEL. 212-687-9888 FAX. 646-487-5501 WWW.CANTORSEINUK.COM

No representation is made by WSPCSG as to the accuracy or state of this document or representation made that it reflects actual building conditions. Use of this file, including modification, is at the sole risk and liability of the user. The user shall to the fullest best permitted by law, indemnify and hold WSPCSG harmless from and against any and all claims, liabilities, damages, losses, judgments, costs and expenses including attorney's fees that may be incurred by WSPCSG as a result of any and all use of the computer file including, but not limited to, any additions to, modifications of, deviations from, or additions to the drawings.

STRUCTURE: Riverside Center - Buildings 1, 2, 3, 4 & 5		
SUBJECT: Site Plan with Estimated Rock Countour Lines		
ARCHITECT: GHW Architects, LLP.	DATE: 01/15/10	SKETCH: SK-01.15.10-02

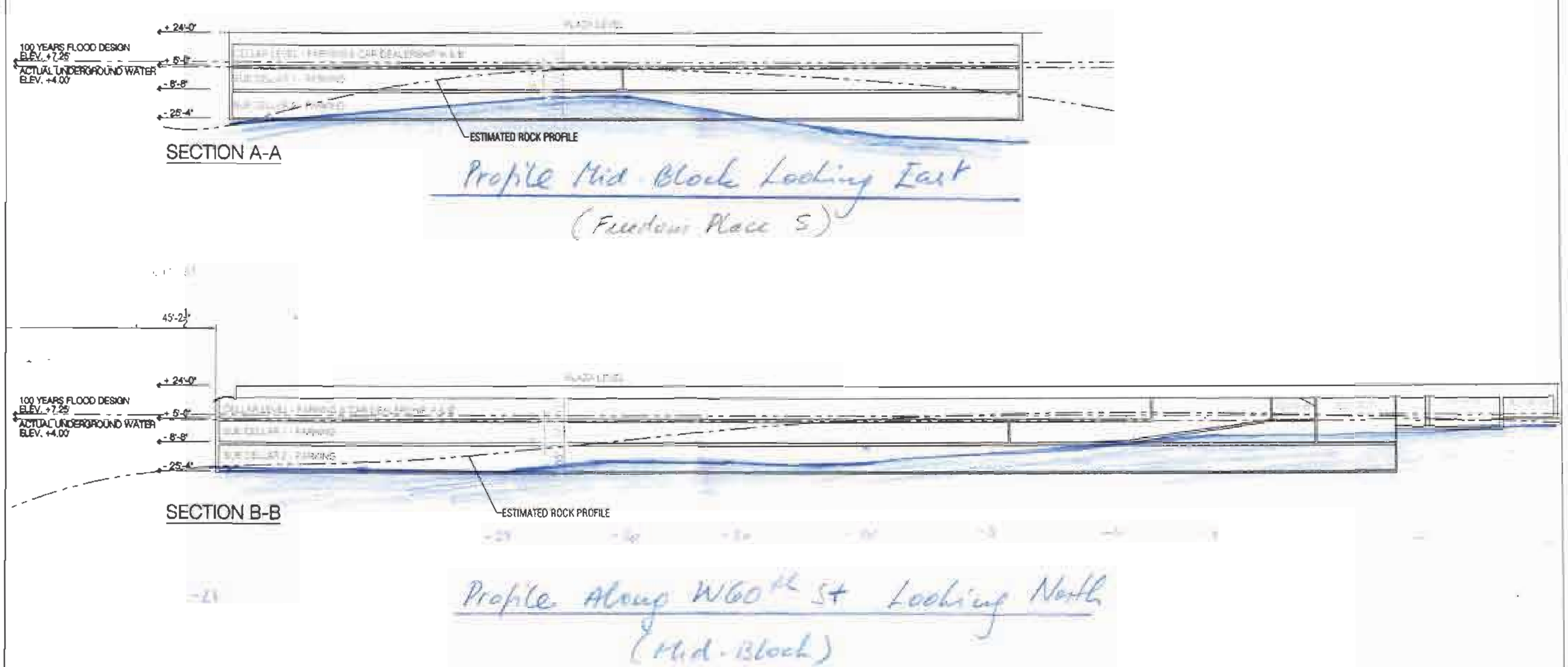

Not to Scale

MRCE 10164
Rock Profile Rev'd
7/19/10

WSP CANTOR SEINUK
STRUCTURAL ENGINEERS
228 EAST 45th STREET NEW YORK, NEW YORK 10017
TEL. 212-687-9888 FAX. 646-487-5501 WWW.CANTORSEINUK.COM

STRUCTURE: Riverside Center - Buildings 1, 2, 3, 4 & 5

SUBJECT: Site Plan with Estimated Rock Countour Lines

ARCHITECT: GHW Architects, LLP.

DATE: 01/15/10

SKETCH: SK-01.15.10-02

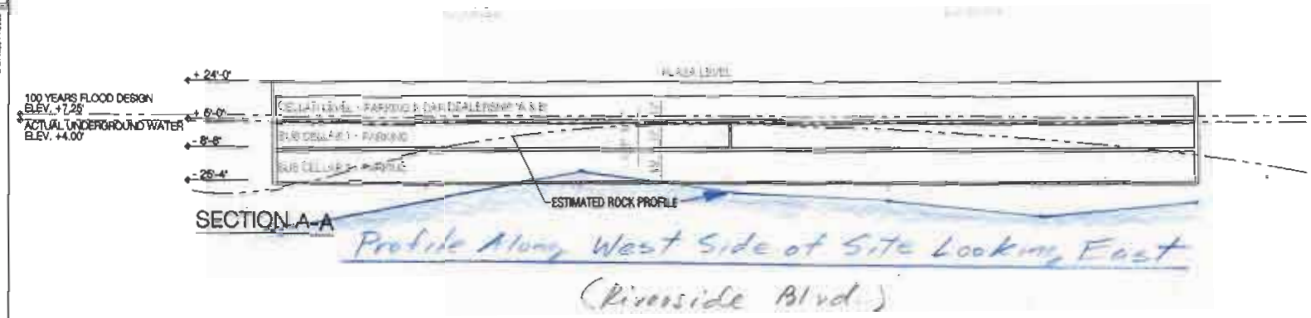

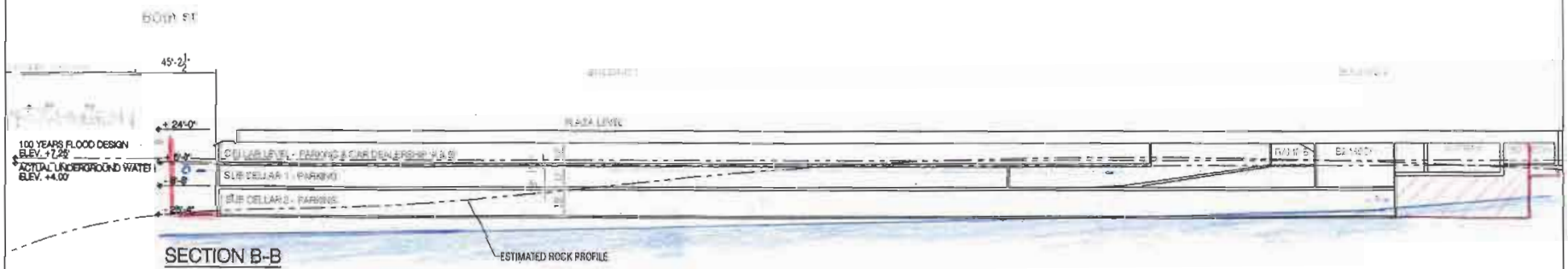

MRCE 10164
ROCK PROFILE REV'D
1/19/10

Not to Scale

WSP CANTOR SEINUK
STRUCTURAL ENGINEERS
228 EAST 45TH STREET NEW YORK, NEW YORK 10017
TEL 212-687-9688 FAX 646-487-3501 WWW.CANTORSEINUK.COM

No representation is made by WSP CSSE as to the accuracy or scale of this document or reproduction made from it which is taken from other contributors. Use of this file, including reproduction, modification, distribution or sharing with third parties, is prohibited without the express written consent of WSP CSSE. WSP CSSE shall not be liable for any damages, including consequential damages, lost profits, or any claim or demand by any third party, resulting from any use of this file by other persons.

STRUCTURE: Riverside Center - Buildings 1, 2, 3, 4 & 5

SUBJECT: Site Plan with Estimated Rock Countour Lines

ARCHITECT: GHW Architects, LLP.

DATE: 01/15/10

SKETCH: SK-01.15.10-02

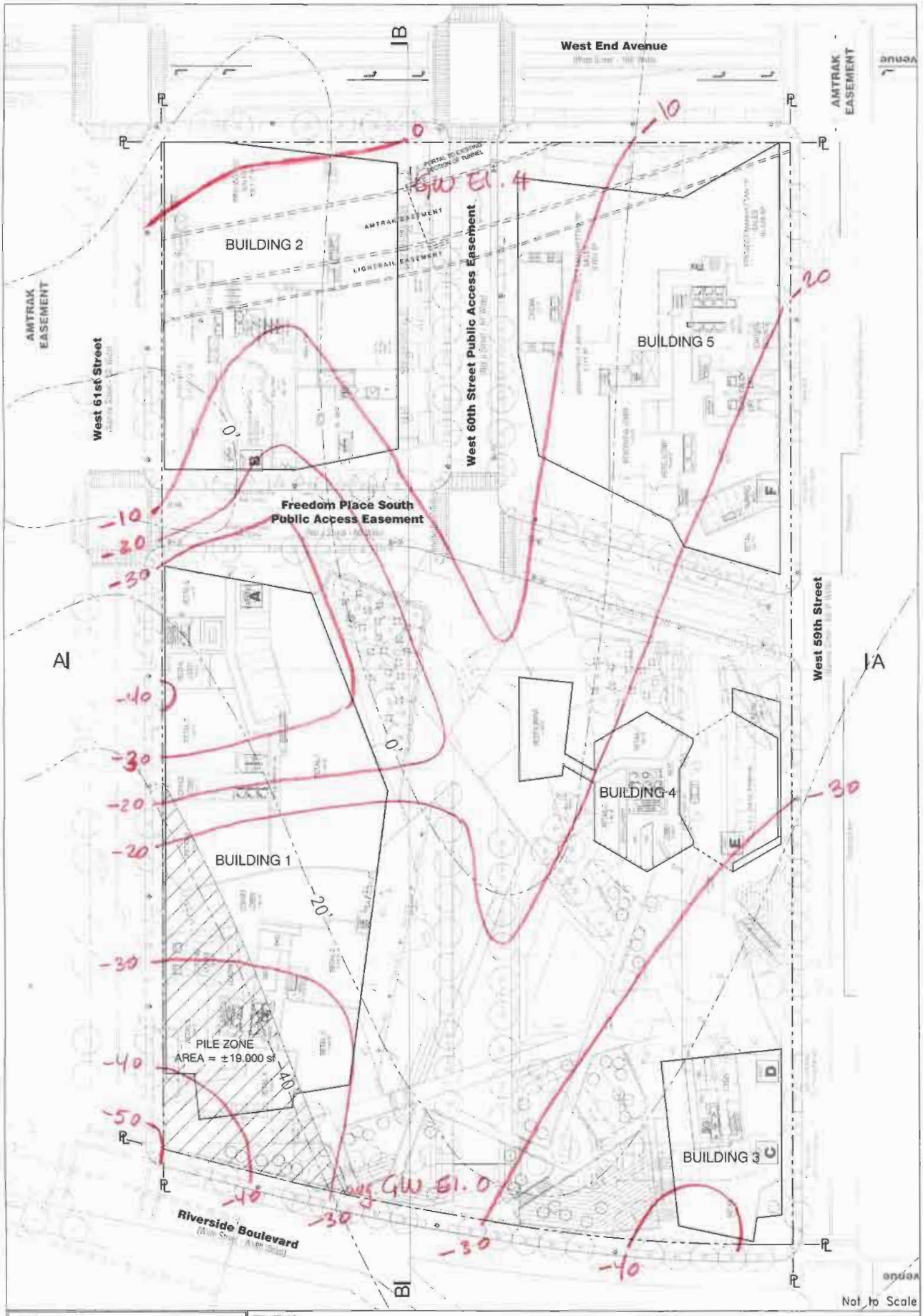

WSP CANTOR SEINUK
STRUCTURAL ENGINEERS

228 EAST 45TH STREET NEW YORK, NEW YORK 10017
TEL. 212-687-9888 FAX 646-487-5501 WWW.CANTORSEINUK.COM

No representation is made by WSP/CSE as to the accuracy or use of this document or representation made that it reflects actual building conditions. Use of this file, including modifications, is at the sole risk and liability of the user. The user shall to the fullest extent permitted by law, indemnify and hold WSP/CSE harmless from and against any and all claims, facilities, damages, losses, judgments, costs and expenses including attorney's fees that may be incurred by WSP/CSE as a result of any and all use of the computer file including, but not limited to, any alterations to, modifications of, omissions from, or additions to the drawings.

STRUCTURE:	Riverside Center - Buildings 1, 2, 3, 4 & 5
SUBJECT:	Site Plan with Estimated Rock Countour Lines TOR REVISED BY MRCE
ARCHITECT: GHW Architects, LLP.	DATE: 01/15/10 REV. 1/19/09
SKETCH: SK-01.15.10-01	

APPENDIX B

RELIEVING PLATFORM DOCUMENTS

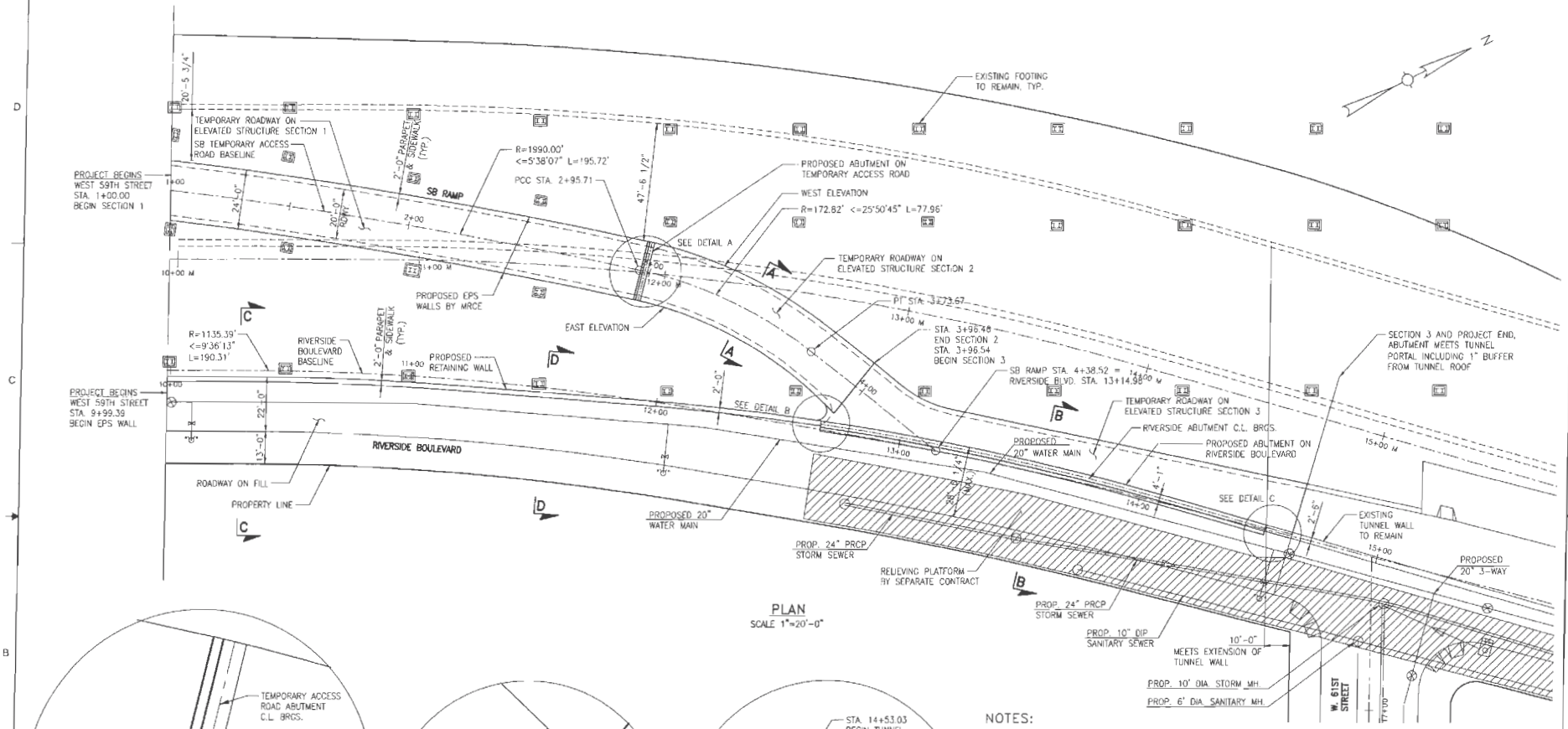

PLAN
SCALE 1"=20'-0"

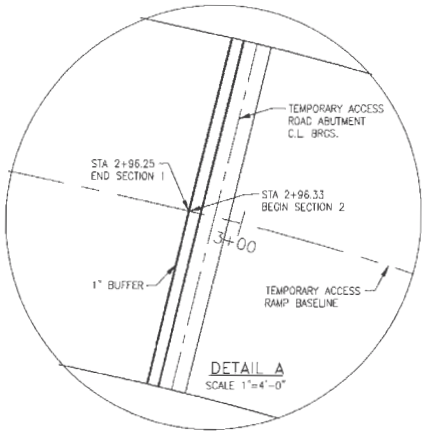

DETAIL A
SCALE 1"=4'-0"

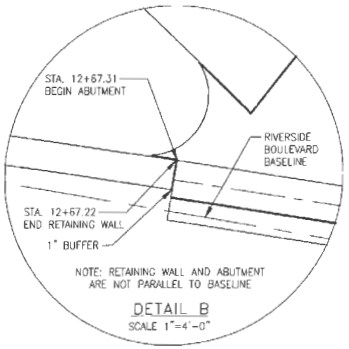

DETAIL B
SCALE 1"=4'-0"

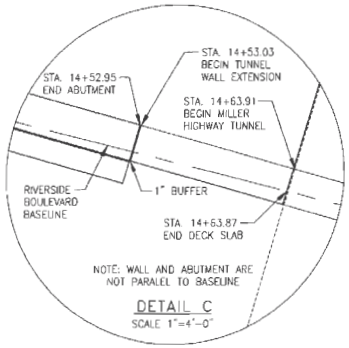

DETAIL C
SCALE 1"=4'-0"

NOTES:

1. BASE PLAN PROVIDED BY PHILIP HABIB & ASSOCIATES.
2. EXISTING MILLER HIGHWAY SURVEY DATA PROVIDED BY MANHATTAN SURVEYING, OCTOBER, 2007.
3. ALL TIE-IN POINTS BETWEEN EXISTING AND PROPOSED STRUCTURES SHALL BE FIELD VERIFIED BY CONTRACTOR PRIOR TO CONSTRUCTION.

REFERENCES:

1. FOR GENERAL NOTES, SEE DWG. NOS. GN-1 AND GN-2.
2. FOR SECTION A-A, SEE DWG NO. ST-2.
3. FOR SECTION B-B, SEE DWG. NO. ST-3.
4. FOR SECTION C-C AND D-D, SEE DWG. NO. ST-4.
5. FOR MUESER RUTLEDGE CONSULTING ENGINEERS DRAWINGS, SEE DWG. NO. MR-1 TO MR-4, AND B-1 TO B-15.

CONTRACT NO. | CD NO. M79

TEMPORARY ACCESS ROAD
RIVERSIDE BOULEVARD
WEST 59TH STREET TO WEST 61ST STREET
BOROUGH OF MANHATTAN

GENERAL PLAN

DWG. NO	SCALE	DATE	SHEET
ST-1	AS SHOWN	09-15-2014	6 OF 65

The RBA Group — Engineers • Architects • Planners
27 Union Square West, New York, New York 10003

0 1 2 3 4 — ORIGINAL SIZE IN INCHES

PREPARED BY: THE RBA GROUP
IN CHARGE: LR | DRAFTER: RJF
DESIGNER: WS | CHECKER: WS

RBA - RIVERSIDE BOULEVARD - TEMPORARY ACCESS ROAD
FILE: TAR_PLN

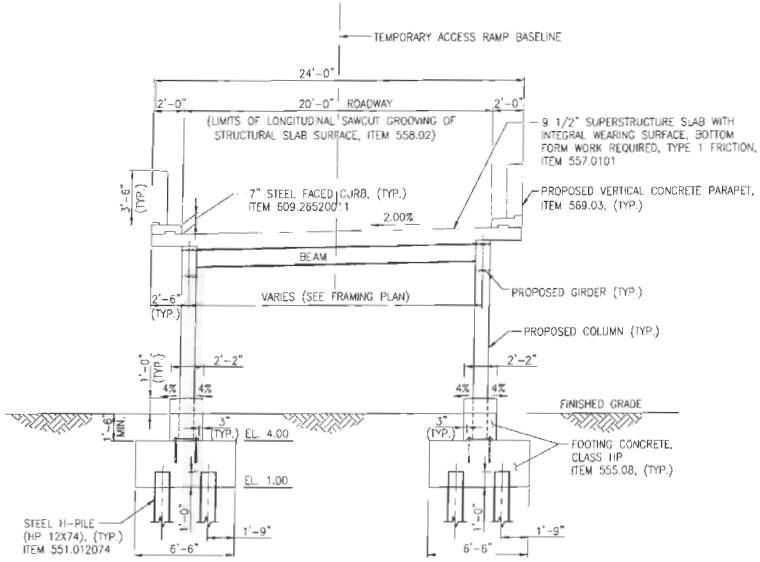

TYPICAL SECTION (LOOKING NORTH)
TEMPORARY ACCESS ROAD STA 2+96.33 TO 3+96.46
SECTION A–A
SCALE: 1/4"=1'-0"

REFERENCES:

1. FOR GENERAL PLAN, SEE DWG. NO. ST–1.
2. FOR COLUMN PILE PLAN AND DETAILS, SEE DWG. NO. ST–9 TO ST–11.
3. FOR FRAMING PLAN, SEE DWG. NO ST–26.

CONTRACT NO.	CD NO. M79

TEMPORARY ACCESS ROAD
RIVERSIDE BOULEVARD
WEST 59TH STREET TO WEST 61ST STREET
BOROUGH OF MANHATTAN

TYPICAL CROSS SECTIONS - I
SB TEMPORARY ACCESS ROAD

DWG. NO.	SCALE	DATE	SHEET
ST-2	AS SHOWN	09-15-2014	7 OF [illegible]

The RBA Group® Engineers • Architects • Planners
27 UNION SQUARE WEST
NEW YORK, NEW YORK 10003

0 1 2 3 4
ORIGINAL SIZE IN INCHES

PREPARED BY	THE RBA GROUP		
IN CHARGE	LR	DRAFTER	RJF
DESIGNER	WS	CHECKER	WS

RBA - RIVERSIDE BOULEVARD - TEMPORARY ACCESS ROAD
FILE: TAR_SEC

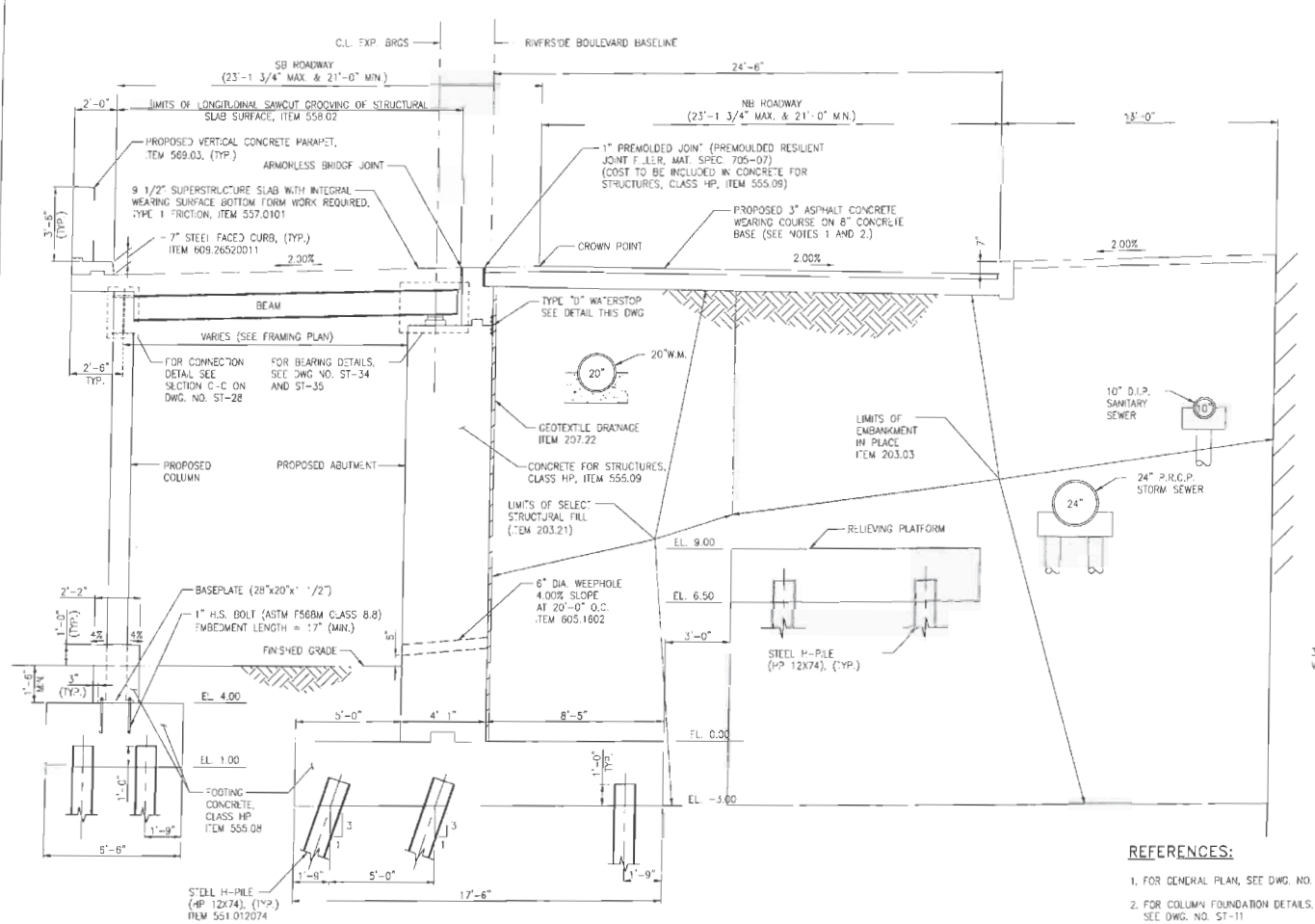

TYPICAL SECTION (LOOKING NORTH)
SB RAMP RIVERSIDE BLVD. STA 3+96.54 TO RIVERSIDE BLVD. STA 14+63.91
SECTION B-B
SCALE: 3/8"=1'-0"

NOTES:

1. CONCRETE BASE FOR PAVEMENT TO BE TYPE C PCC CONCRETE (ITEM 503.1010).
2. TYPE OF ASPHALT MIX TO BE APPLIED ON THE 3" ASPHALT CONCRETE WEARING SURFACE.

   TOP COURSE: 1.5" THICK
   12.5 F1 TOP COURSE HMA, 70 SERIES
   COMPACTION (ITEM 402.12102)
   PLANT PRODUCTION QUALITY ADJUSTMENT (ITEM 402.127112)

   BASE COURSE: 1.5" THICK
   25 F9 BINDER COURSE HMA, 70 SERIES
   COMPACTION (ITEM 402.257902)
   PLANT PRODUCTION QUALITY ADJUSTMENT (ITEM 402.257912)

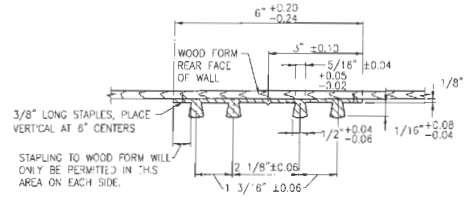

TYPE "D" WATERSTOP DETAIL
N.T.S.

REFERENCES:

1. FOR GENERAL PLAN, SEE DWG. NO. ST-1
2. FOR COLUMN FOUNDATION DETAILS, SEE DWG. NO. ST-11
3. FOR ABUTMENT SECTION DETAILS, SEE DWG. NO. ST-14
4. FOR STEEL FACED CURB DETAIL, SEE DWG. NO. ST-38
5. FOR PARAPET ARCHITECTURAL TREATMENT DETAIL, SEE DWG. NO. ST-38
6. FOR ARMORLESS BRIDGE JOINT DETAIL, SEE DWG. NO. ST-41
7. FOR FRAMING PLAN, SEE DWG. NO. ST-26

CONTRACT NO. | CD NO. M79

TEMPORARY ACCESS ROAD
RIVERSIDE BOULEVARD
WEST 59TH STREET TO WEST 61ST STREET
BOROUGH OF MANHATTAN

TYPICAL CROSS SECTIONS - II
NB RIVERSIDE BOULEVARD

The RBA GROUP ENGINEERS • ARCHITECTS • PLANNERS
1 UNION SQUARE WEST
NEW YORK, NEW YORK 10003

ORIGINAL SIZE IN INCHES

PREPARED BY	THE RBA GROUP		
IN CHARGE	LR	DRAFTER	RJF
DESIGNER	WS	CHECKER	WS

DWG. NO.	SCALE	DATE	SHEET
ST-3	AS SHOWN	09-15-2014	8 OF 68

RBA - RIVERSIDE BOULEVARD - TEMPORARY ACCESS ROAD
FILE: TAR_SEC

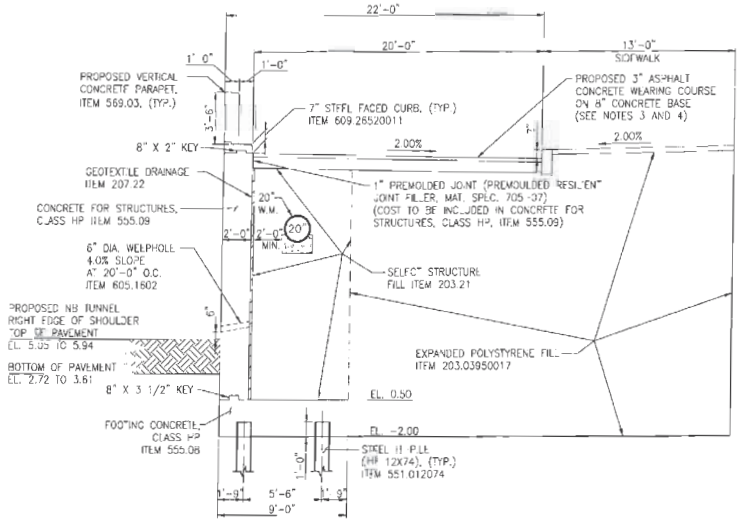

STA. 9+99.39 – 11+00 TYPICAL
SECTION (LOOKING NORTH)
SECTION C–C
SCALE 1/4"=1'-0"

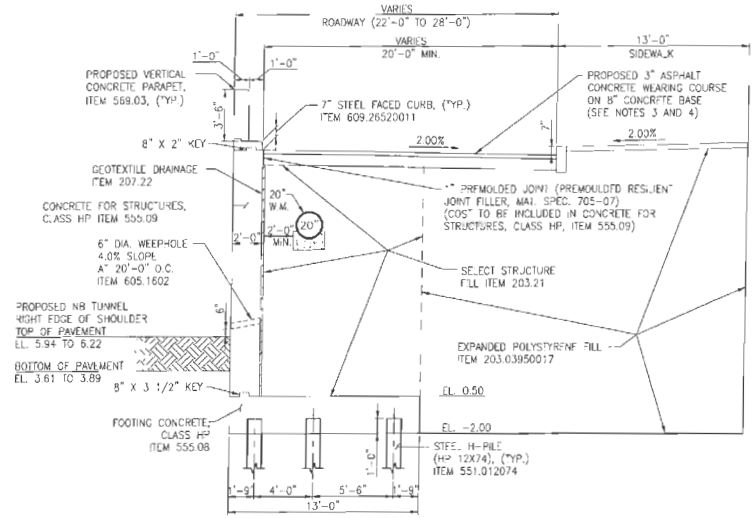

STA. 11+00 – 12+67.22 TYPICAL
SECTION (LOOKING NORTH)
SECTION D–D
SCALE 1/4"=1'-0"

NOTES:

1. THE CONTRACTOR IS RESPONSIBLE FOR DESIGN AND LAYOUT OF EPS BLOCK IN ACCORDANCE WITH NYSDOT DESIGN AND CONSTRUCTION GUIDELINES. A MINIMUM 4-FT COVER SHALL BE PROVIDED BETWEEN THE EPS BLOCKS AND RIDING SURFACES. A PROTECTIVE CAP COMPRISING A REINFORCED 4-INCH CONCRETE SHALL BE USED. THE MATERIAL USED SHALL SATISFY THE NYSDOT STRENGTH REQUIREMENT FOR AASHTO HS-25 LIVE LOADING.
2. SHOP DRAWINGS SHALL BE SUBMITTED TO THE ENGINEER FOR REVIEW AND APPROVAL.
3. CONCRETE BASE FOR PAYMENT TO BE TYPE C PCC CONCRETE (ITEM 503.1010)
4. TYPE OF ASPHALT MIX TO BE APPLIED ON THE 3" ASPHALT CONCRETE WEARING SURFACE:

   TOP COURSE: 1.5" THICK
   12.5 F1 TOP COURSE HMA, 70 SERIES COMPACTION (ITEM 402.12102)
   PLANT PRODUCTION QUALITY ADJUSTMENT (ITEM 402.127112)

   BASE COURSE: 1.5" THICK
   25 F9 BINDER COURSE HMA, 70 SERIES COMPACTION (ITEM 402.257902)
   PLANT PRODUCTION QUALITY ADJUSTMENT (ITEM 402.257912

REFERENCES:

1. FOR GENERAL PLAN, SEE DWG. NO. ST-1.
2. FOR RETAINING WALL SECTION DETAILS, SEE DWG. NO. ST-22

CONTRACT NO. CD NO. M79

TEMPORARY ACCESS ROAD
RIVERSIDE BOULEVARD
WEST 59TH STREET TO WEST 61ST STREET
BOROUGH OF MANHATTAN

TYPICAL CROSS SECTIONS - III
NB RIVERSIDE BOULEVARD

DWG. NO.	SCALE	DATE	SHEET
ST-4	AS SHOWN	09-15-2014	9 OF 68

The RBA GROUP ENGINEERS • ARCHITECTS • PLANNERS
27 UNION SQUARE WEST
NEW YORK, NEW YORK 10003

ORIGINAL SIZE IN INCHES

PREPARED BY THE RBA GROUP
IN CHARGE LR DRAFTER RJF
DESIGNER WS CHECKER WS

RBA - RIVERSIDE BOULEVARD - TEMPORARY ACCESS ROAD
FILE: TAR_SEC

TEMPORARY ACCESS ROAD

RIVERSIDE BOULEVARD

WEST 59TH STREET TO WEST 61ST STREET

CD NO. M79
BOROUGH OF MANHATTAN
COUNCIL DISTRICT: 6
COMMUNITY BOARD: 7

FINAL PLANS

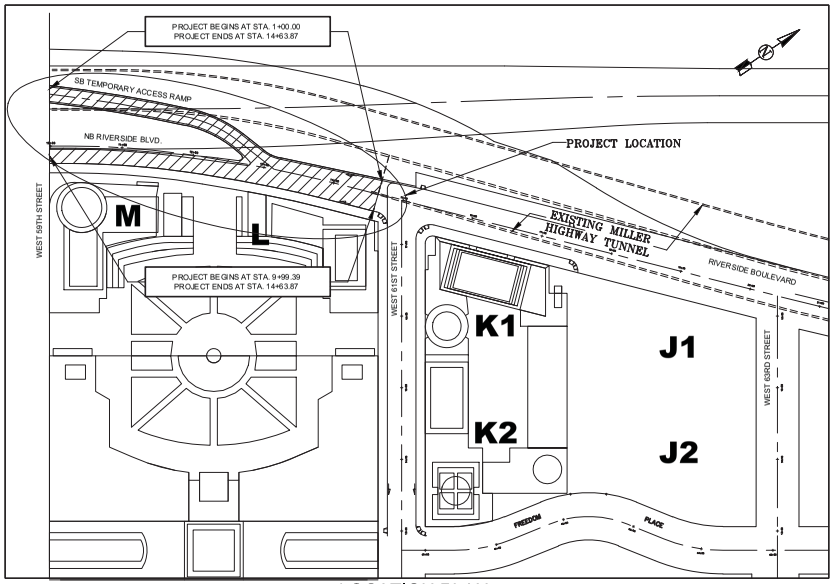

LOCATION PLAN
N.T.S.

Owner:
GRP/EXTELL, L.P.

PREPARED BY:
The RBA Group
ENGINEERS • ARCHITECTS • PLANNERS
27 UNION SQUARE WEST
NEW YORK, NEW YORK 10003

LINDA REARDON, P.E.
PROJECT MANAGER
DATE

TITLE SHEET

DWG. NO.	SCALE	DATE	SHEET
T-1	N.T.S.	09-15-2014	1 OF 68

INDEX OF ITEMS

ITEM NO.	DESCRIPTION	UNIT
203.02	UNCLASSIFIED EXCAVATION AND DISPOSAL	CY
203.03950017	EXPANDED POLYSTYRENE FILL	CF
203.03	EMBANKMENT IN PLACE	CY
203.21	SELECT STRUCTURE FILL	CY
206.01	STRUCTURE EXCAVATION	CY
207.22	GEOTEXTILE DRAINAGE	SY
304.11	SUBBASE COURSE, TYPE 1	CY
402.12102	12.5 F1 TOP COURSE HMA, 70 SERIES COMPACTION (1.5" THICK)	CY
402.127112	PLANT PRODUCTION QUALITY ADJUSTMENT	CY
402.257902	25 F9 BINDER COURSE HMA, 70 SERIES COMPACTION (1.5" THICK)	CY
402.257912	PLANT PRODUCTION QUALITY ADJUSTMENT	CY
407.0101	TACK COAT	GAL
503.1010	TYPE C PCC CONCRETE BASE FOR PAVEMENT	CY
551.012074	STEEL H-PILE (HP 12X74)	LF
555.08	FOOTING CONCRETE, CLASS HP	CY
555.09	CONCRETE FOR STRUCTURES, CLASS HP	CY
556.0202	EPOXY-COATED BAR REINFORCEMENT FOR STRUCTURES	LB
556.03	STUD SHEAR CONNECTORS FOR BRIDGES	EACH
557.0101	SUPERSTRUCTURE SLAB WITH INTEGRAL WEARING SURFACE - BOTTOM FORMWORK REQUIRED - TYPE 1 FRICTION	SY
558.02	LONGITUDINAL SAWCUT GROOVING OF STRUCTURAL SLAB SURFACE	SY
559.18960118	PROTECTIVE SEALING OF STRUCTURAL CONCRETE ON NEW BRIDGE DECKS AND BRIDGE DECK OVERLAYS	SF
559.19010011	PAINTING EXISTING CONCRETE SURFACES	SF
559.90010011	ANTI-GRAFFITI PROTECTION COATING	SY
564.05	STRUCTURAL STEEL	L.S.
565.2032	TYPE E.B EXPANSION BEARING (56 TO 111 KIPS)	EACH
567.60	ARMORLESS BRIDGE JOINT SYSTEM	LF
569.03	VERTICAL FACED CONCRETE PARAPET	LF
569.04	SINGLE SLOPE (HALF SECTION) CONCRETE BRIDGE BARRIER	LF
586.02	DRILLING AND GROUTING BOLTS OR REINFORCING BARS	EACH
605.1602	PERFORATED POLYVINYL CHLORIDE UNDERDRAIN PIPE, 6 INCH DIAMETER	LF
609.26520011	STEEL FACING FOR CURB ON STRUCTURES (NYC), TYPE D	LF
625.01	SURVEY OPERATIONS	LS
632.0102	CONCRETE CRIBBING (PRECAST CONCRETE WALL UNIT TYPE)	SF
632.0602	BACKFILL FOR CONCRETE CRIBBING (PRECAST CONCRETE WALL UNIT TYPE)	CY
637.03	CONCRETE CYLINDER CURING BOX	EACH
640.10	WHITE PAINT REFLECTORIZED PAVEMENT STRIPES - 15 MILS	LF
640.11	YELLOW PAINT REFLECTORIZED PAVEMENT STRIPES - 15 MILS	LF
699.040001	MOBILIZATION	L.S.
831.01	PAINT SYSTEM A - ALL COATS APPLIED IN SHOP (SP10/INORGANIC ZINC/EPOXY INTERMEDIATE/URETHANE FINISH)	L.S.

INDEX OF DRAWINGS

SHEET NO.	DRAWING NO.	DESCRIPTION
1	T-1	TITLE SHEET
2	I-1	INDEX OF ITEMS AND DRAWINGS
3	L-1	LEGEND AND ABBREVIATIONS
4	GN-1	GENERAL NOTES - I
5	GN-2	GENERAL NOTES - II
6	ST-1	GENERAL PLAN
7	ST-2	TYPICAL CROSS-SECTION I - SB TEMPORARY ACCESS ROAD
8	ST-3	TYPICAL CROSS-SECTION II - NB RIVERSIDE BOULEVARD
9	ST-4	TYPICAL CROSS-SECTION III - NB RIVERSIDE BOULEVARD
10	ST-5	NB RIVERSIDE BOULEVARD PROFILE
11	ST-6	SB TEMPORARY ACCESS ROAD PROFILE
12	ST-7	ABUTMENT ON TEMPORARY ACCESS ROAD - PLAN, ELEVATION AND SECTION DETAILS
13	ST-8	ABUTMENT ON TEMPORARY ACCESS ROAD - BACKWALL, STEM AND FOOTING REINFORCEMENT PLANS AND PILE LAYOUT
14	ST-9	COLUMNS ON SB TEMPORARY ACCESS ROAD - EVEVATION I
15	ST-10	COLUMNS ON SB TEMPORARY ACCESS ROAD - EVEVATION II
16	ST-11	COLUMNS ON SB TEMPORARY ACCESS ROAD - FOOTING DETAIL
17	ST-12	ABUTMENT ON RIVERSIDE BOULEVARD - PLAN AND ELEVATION I
18	ST-13	ABUTMENT ON RIVERSIDE BOULEVARD - PLAN AND ELEVATION II
19	ST-14	ABUTMENT ON RIVERSIDE BOULEVARD - SECTION DETAILS
20	ST-15	ABUTMENT ON RIVERSIDE BOULEVARD - BACKWALL REINFORCEMENT PLAN
21	ST-16	ABUTMENT ON RIVERSIDE BOULEVARD - STEM REINFORCEMENT PLAN
22	ST-17	ABUTMENT ON RIVERSIDE BOULEVARD - FOOTING REINFORCEMENT PLAN
23	ST-18	ABUTMENT ON RIVERSIDE BOULEVARD - PILE LAYOUT
24	ST-19	RETAINING WALL ON RIVERSIDE BOULEVARD - PLAN AND ELEVATION I
25	ST-20	RETAINING WALL ON RIVERSIDE BOULEVARD - PLAN AND ELEVATION II
26	ST-21	RETAINING WALL ON RIVERSIDE BOULEVARD - PLAN AND ELEVATION III
27	ST-22	RETAINING WALL ON RIVERSIDE BOULEVARD - SECTION
28	ST-23	RETAINING WALL ON RIVERSIDE BOULEVARD - WALL REINFORCEMENT PLAN
29	ST-24	RETAINING WALL ON RIVERSIDE BOULEVARD - FOOTING REINFORCEMENT PLAN
30	ST-25	RETAINING WALL ON RIVERSIDE BOULEVARD - PILE LAYOUT

INDEX OF DRAWINGS

SHEET NO.	DRAWING NO.	DESCRIPTION
31	ST-26	FRAMING PLAN
32	ST-27	STEEL DETAILS - I
33	ST-28	STEEL DETAILS - II
34	ST-29	STEEL DETAILS - III
35	ST-30	MOMENT AND SHEAR TABLE, DESIGN LOAD TABLE - SECTION 2
36	ST-31	MOMENT AND SHEAR TABLE, DESIGN LOAD TABLE - SECTION 3
37	ST-32	CAMBER TABLE - BEAMS
37F	ST-32A	CAMBER TABLE - GIRDERS
38	ST-33	HAUNCH TABLE - SECTION 3
38F	ST-33A	HAUNCH TABLE - SECTION 2
39	ST-34	ELASTOMERIC BEARING DETAILS - I
40	ST-35	ELASTOMERIC BEARING DETAILS - II
41	ST-36	DECK PLAN - I
42	ST-37	DECK PLAN - II
43	ST-38	DECK SLAB SECTION - I
44	ST-39	DECK SLAB SECTION - II
45	ST-40	DECK DETAILS
46	ST-41	JOINT DETAILS
47	MR-1	SOUTHBOUND RAMP - PLAN
48	MR-2	SOUTHBOUND RAMP - EAST ABUTMENT WALL
49	MR-3	SOUTHBOUND RAMP - WEST ABUTMENT WALL
50	MR-4	SOUTHBOUND RAMP - SECTIONS
51	PV-1	SOUTHBOUND RAMP - TYPICAL SECTIONS
52	B-1	TOP OF BEDROCK CONTOUR PLAN
53	B-2	GEOLOGIC SECTION A-A
54	B-3	GEOLOGIC SECTION B-B
55	B-4	GEOLOGIC SECTION C-C
56	B-5	GEOLOGIC SECTION D-D
57	B-6	GEOTECHNICAL REFERENCE STANDARDS
58	B-7	ROCK CORE CLASSIFICATION CRITERIA
59	B-8	BORING LOGS - I
60	B-9	BORING LOGS - II
61	B-10	BORING LOGS - III
62	B-11	BORING LOGS - IV
63	B-12	BORING LOGS - V
64	B-13	BORING LOGS - VI
65	B-14	BORING LOGS - VII
66	B-15	BORING LOGS - VIII
67	B-16	BORING LOGS - IX
68	B-17	BORING LOGS - X

NEW YORK STATE DEPARTMENT OF TRANSPORTATION LIST OF STANDARD DRAWINGS

STANDARD DRAWINGS	DATE OF LATEST REVISION	TITLE
BD-AB1E R1	6/28/10	ABUTMENT PLAN AND ELEVATION FOR U-WINGWALL STRUCTURE (FOR SKEW UNDER 30°)
BD-AB4E R1	6/28/10	EXAMPLE OF PILE LAYOUT AND FOOTING REINFORCEMENT PLAN
BD-AB5E R1	6/28/10	REINFORCEMENT PLANS FOR STEM, BACKWALL, HEADER AND PEDESTAL DETAILS
BD-AB6E R1	6/28/10	ABUTMENT SECTIONS AND CONCRETE KEYWAY DETAILS (PILE FOUNDATION SHOWN)
BD-AB8E R1	6/28/10	MISCELLANEOUS ABUTMENT DETAILS
BD-MS5E	5/01/08	MISCELLANEOUS PILE DETAILS
BD-SA1E	5/01/08	APPROACH SLABS - PLAN VIEWS AND DETAILS
BD-SA2E	5/01/08	APPROACH SLABS - ELEVATION AND NOTES
BD-SS5E	5/01/08	SUPERSTRUCTURE SLAB HAUNCH AND JOINT DETAILS
BD-SS6E	5/01/08	SUPERSTRUCTURE SLAB TRADITIONAL REINFORCEMENT TRANSVERSE SECTION
BD-SS7E	5/01/08	SUPERSTRUCTURE SLAB TRADITIONAL REINFORCEMENT SLAB CORNER DETAILS
BD-BG3E	5/01/08	EXPANSION ELASTOMERIC BEARING STEEL LAMINATED EXTERNAL PLATES (TYPE E.B.)
BD-BG6E	5/01/08	MISCELLANEOUS BEARING DETAILS
BD-JT1E	5/01/08	ARMORLESS BRIDGE JOINT SYSTEMS TYPICAL SECTIONS
BD-JT2E	5/01/08	ARMORLESS BRIDGE JOINT SYSTEMS TYPICAL PLANS I
BD-JT4E	5/01/08	ARMORLESS BRIDGE JOINT SYSTEMS - TYPICAL SECTIONS ALONG JOINT
BD-RS1E	5/01/08	STEEL BRIDGE RAILING TWO-RAIL AND THREE-RAIL
BD-MS4E	5/01/08	CURB TYPES AND OTHER MISCELLANEOUS DETAILS

CONTRACT NO. | CD NO. M79

TEMPORARY ACCESS ROAD
RIVERSIDE BOULEVARD
WEST 59TH STREET TO WEST 61ST STREET
BOROUGH OF MANHATTAN

INDEX OF ITEMS AND DRAWINGS

DWG. NO.	SCALE	DATE	SHEET
I-1	NONE	09-15-2014	2 OF 68

The RBA Group
ENGINEERS • ARCHITECTS • PLANNERS
27 UNION SQUARE WEST
NEW YORK, NEW YORK 10003

0 1 2 3 4
ORIGINAL SIZE IN INCHES

PREPARED BY THE RBA GROUP
IN CHARGE LR | DRAFTER RJF
DESIGNER WS | CHECKER WS

RBA - RIVERSIDE BOULEVARD - TEMPORARY ACCESS ROAD
FILE: TAR_IND

LEGEND

	EXISTING	PROPOSED
MANHOLES		
STORM SEWER		ST
COMBINED SEWER		
SANITARY SEWER		SAN
BASINS		
CATCH BASIN – TYPE 2		
HYDRANTS		
LOW PRESSURE HYDRANT, WITH FENDERS		
VALVE BOX (INCL. VALVES)		
GAS		
WATER		
TREES		
NEW TREE TO BE PLANTED		
STREET LIGHT POLE		
TYPE 'B' STREET LIGHT		
MISCELLANEOUS		
VAULT (ELEC.)		
TRAFFIC DIRECTION		
PEDESTRIAN RAMP		
CURB (CONCRETE UNLESS OTHERWISE SPECIFIED)		
WATER MAIN (WITH SIZE)		20"W
GAS LINE (WITH SIZE)		8"G
ELECTRIC		E
SANITARY SEWER (WITH SIZE)		10"SAN
NEW CATCH BASIN CONNECTION (12" D.I.P.)		12"DIP
WATER FLOW		
LIMIT OF WORK		
CENTER LINE AND STATION		10+00
CHAIN LINK FENCE		
PROPERTY LINE (RIGHT-OF-WAY LINE)		
BUILDING LINE		
NORTH ARROW		N

ABBREVIATIONS

ABUT – ABUTMENT
ADD'L – ADDITIONAL
A.O.B.E. – AS ORDERED BY THE ENGINEER
APPROX. – APPROXIMATE
APP. – APPROACH
ASPH. – ASPHALT
AVE – AVENUE
BC – BOTTOM OF CURB
BLDG – BUILDING
BRG(S) – BEARING(S)
BOT. – BOTTOM
CB – CATCH BASIN
C.C. – CENTER TO CENTER
C.G. – CENTER OF GRAVITY
C.I.P. – CAST IN PLACE
CL. – CLEARANCE
C.L. – CENTER LINE
COL. – COLUMN
COMP. – COMPRESSION
CONC. – CONCRETE
CON ED – CONSOLIDATED EDISON
CONN. – CONNECTION
CONSTR. – CONSTRUCTION
CJ – CONSTRUCTION JOINT
CONT. – CONTINUE
COV. – COVER
DIA. – DIAMETER
DIP – DUCTILE IRON PIPE
D.L. – DEAD LOAD
DWG(S) – DRAWING(S)
E. – EAST
EA. – EACH
E.E. – EACH END
E.F. – EACH FACE
EL. – ELEVATION
EP – EDGE OF PAVEMENT
EQ. – EQUAL
EXIST. – EXISTING
EXP. – EXPANSION
F.F. – FRONT FACE
FIX. – FIXED
FOUND. – FOUNDATION
FT. – FOOT/FEET
FTG – FOOTING
HP – HIGH-PERFORMANCE
IN – INCH(ES)
JT – JOINT
KIPS – KILOPOUNDS
KSI – KIPS PER SQUARE INCH
LBS. – POUNDS
L.F. – LINEAR FEET
L.L. – LIVE LOAD
LOC. – LOCATION
LONGIT. – LONGITUDINAL
MAT. – MATERIAL
MAX. – MAXIMUM
MO – MAXIMUM OFFSET
MH – MANHOLE
MIN. – MINIMUM
N. – NORTH
NB – NORTHBOUND
NO.(S) – NUMBER(S)
N.T.S. – NOT TO SCALE
N.Y.C. – NEW YORK CITY
N.Y.S. – NEW YORK STATE
O.C. – ON CENTER
O.D. – OUTSIDE DIAMETER
PAV'T. – PAVEMENT
PL. – PLATE
P.C. – PRESSTRESED CONCRETE
P.R.C.P. – PRECAST REINFORCED CONCRETE PIPE
PROP. – PROPOSED
PSI – POUNDS PER SQUARE INCH
PT. – POINT
PVI – POINT OF VERTICAL INTERSECTION
P.V.C. – POLYVINYLE CHLORIDE COATED
RDWY. – ROADWAY
REINF. – REINFORCED
REQ'D – REQUIRED
R.F. – REAR FACE
R.O.W. – RIGHT OF WAY
RW – RETAINING WALL
S. – SOUTH
SB – SOUTHBOUND
SCH. – SCHEDULE
SAN – SANITARY
S.D.L. – SUPERIMPOSED DEAD LOAD
SDWLK. – SIDEWALK
SHLDR. – SHOULDER
SPA. – SPACING
SPEC. – SPECIFICATION
SQ. – SQUARE
ST – STREET
STA. – STATION
SE – SOUTHEAST
SW – SOUTHWEST
STD. – STANDARD
SYMM. – SYMMETRICAL
TC – TOP OF CURB
TEMP. – TEMPORARY
T.G.L. – THEORETICAL GRADE LINE
TYP. – TYPICAL
THICK. – THICKNESS
VERT. – VERTICAL
VC – VERTICAL CURVE
W. – WEST
W/ – WITH
W.M. – WATER MAIN
WW – WING WALL

CONTRACT NO. | CD NO. M79

TEMPORARY ACCESS ROAD
RIVERSIDE BOULEVARD
WEST 59TH STREET TO WEST 61ST STREET
BOROUGH OF MANHATTAN

LEGEND AND ABBREVIATIONS

DWG. NO.	SCALE	DATE	SHEET
L-1	NONE	09-15-2014	3 OF 68

The RBA Group
ENGINEERS • ARCHITECTS • PLANNERS
27 UNION SQUARE WEST
NEW YORK, NEW YORK 10003

0 1 2 3 4
ORIGINAL SIZE IN INCHES

PREPARED BY THE RBA GROUP
IN CHARGE LR | DRAFTER RJF
DESIGNER WS | CHECKER WS

RBA - RIVERSIDE BOULEVARD - TEMPORARY ACCESS ROAD
FILE: TAR_LEG

DESIGN AND SPECIFICATIONS

1. DESIGN SPECIFICATION:
"NEW YORK STATE DEPARTMENT OF TRANSPORTATION STANDARD SPECIFICATIONS FOR HIGHWAY BRIDGES", 17TH EDITION, 2002, WITH CURRENT AMENDMENTS. (FOR DESIGN PURPOSED, COMPRESSIVE STRENGTH OF CONCRETE FOR SUBSTRUCTURES AND DECK SLABS AT 28 DAYS: f'c = 3,000 PSI.)

2. STANDARD SPECIFICATIONS, CONSTRUCTION AND MATERIALS:
NEW YORK STATE DEPARTMENT OF TRANSPORTATION "STANDARD SPECIFICATIONS (US CUSTOMARY)" DATED MAY 1, 2008, WITH CURRENT ADDITIONS AND MODIFICATIONS.

3. "NEW YORK STATE STEEL CONSTRUCTION MANUAL" (SCM), THIRD EDITION, DATED MARCH 2008 WITH CURRENT ADDITIONS AND MODIFICATIONS.

4. SEISMIC DESIGN:
SEISMIC DESIGN OF THE BRIDGE STRUCTURE AND RETAINING WALLS PERFORMED IN ACCORDANCE WITH THE 1998 NYCDOT "SEISMIC DESIGN CRITERIA–GUIDELINES".

5. CITY OF NEW YORK DEPARTMENT OF TRANSPORTATION BUREAU OF TRAFFIC OPERATIONS DIVISION OF STREET LIGHTING SPECIFICATIONS, 1992 EDITION, WITH CURRENT ADDITIONS AND MODIFICATIONS.

6. DESIGN LIVE LOAD: AASHTO HS25

7. THE LOAD RATINGS FOR THE STRUCTURE IS CALCULATED IN ACCORDANCE WITH THE AASHTO "MANUAL FOR CONDITION EVALUATION OF BRIDGES 1994" WITH ALL INTERIM PROVISIONS IN EFFECT. RATING IS BASED ON WORKING STRESS METHOD

AASHTO DESIGNATION	INVENTORY		OPERATING		GOVERNING ELEMENT
HS25	HS28	52.0 T	HS43	79.0 T	B–13
HS20	HS28	52.0 T	HS43	79.0 T	B–13
H20	H28	29.0 T	H43	44.0 T	B–13
TYPE 3		45.0 T		68.0 T	B–13
TYPE 3S2		71.0 T		107.0 T	B–13
TYPE 3–3		87.0 T		131.0 T	B–13

SEE DWG NO. ST–26 FOR THE LOCATION OF GOVERNING ELEMENT.

8. THE DESIGN OF THE STRUCTURE IS BASED ON AASHTO'S SERVICE LOAD DESIGN (ALLOWABLE STRESS) METHOD.

9. ALL PAY ITEMS IN THIS CONTRACT ARE ENGLISH PAY ITEMS AND SPECIFICATIONS ARE IN ACCORDANCE WITH THE CURRENT NEW YORK STATE DEPARTMENT OF TRANSPORTATION "STANDARD SPECIFICATIONS (US CUSTOMARY)" DATED MAY 1, 2008.

GENERAL

1. THE CONTRACTOR SHALL PERFORM ALL WORK WITH CARE SO THAT ANY MATERIALS WHICH ARE TO REMAIN IN PLACE, OR WHICH ARE TO REMAIN THE PROPERTY OF THE CITY, WILL NOT BE DAMAGED. IF THE CONTRACTOR DAMAGES ANY MATERIALS WHICH ARE TO REMAIN PROPERTY OF THE CITY, THE DAMAGED MATERIALS SHALL BE REPAIRED OR REPLACED IN A MANNER SATISFACTORY TO THE ENGINEER AT THE EXPENSE OF THE CONTRACTOR.

2. THE COST OF FURNISHING, INSTALLING, MAINTAINING, REMOVING AND DISPOSING OF ALL PLATFORMS, NETS, SCREENS OR OTHER PROTECTIVE DEVICES SHALL BE INCLUDED IN THE UNIT PRICE BID FOR THE APPROPRIATE ITEMS OF THE CONTRACT.

3. THE COST OF ALL JOINT MATERIAL WILL BE INCLUDED IN THE UNIT PRICE BID FOR THE VARIOUS ITEMS OF THE CONTRACT, UNLESS OTHERWISE SPECIFIED ON THE PLANS.

4. THE COST OF WATER USED FOR ANY CONSTRUCTION PURPOSES SHALL BE INCLUDED UNDER THE APPROPRIATE ITEMS.

5. TEMPORARY ACCESS ROAD STRUCTURE IS TO BE MAINTAINED IN ACCORDANCE WITH THE GUIDELINES ESTABLISHED BY THE AMERICAN ASSOCIATION OF HIGHWAY AND TRANSPORTATION OFFICIALS AND DESCRIBED IN THE "AASHTO MANUAL FOR BRIDGE MAINTENANCE", 2ND EDITION, 1987.

STRUCTURAL CONCRETE

1. REINFORCEMENT SHALL BE DEFORMED BARS ASTM A615 GRADE 60. ALL REINFORCEMENT SHALL BE EPOXY–COATED. ALLOWABLE TENSILE STRESS OF REINFORCEMENT fs = 24,000 PSI YIELD STRENGTH OF REINFORCEMENT fy = 60,000 PSI.

2. ALL CONCRETE SHALL ATTAIN A MINIMUM COMPRESSIVE STRENGTH OF 3,500 PSI AT 28 DAYS.

3. CONCRETE FOR BRIDGE SIDEWALK AND PARAPET, FOR ABUTMENT AND RETAINING WALL STEM, BACKWALL AND PEDESTALS SHALL BE PAID UNDER ITEM 555.09 "CONCRETE FOR STRUCTURES, CLASS HP." CONCRETE FOR FOOTINGS SHALL BE PAID UNDER ITEM 555.08 "FOOTING CONCRETE, CLASS HP." CONCRETE FOR BRIDGE DECK SHALL BE PAID UNDER ITEM 557.0101 "SUPERSTRUCTURE SLAB WITH INTEGRAL WEARING SURFACE, BOTTOM FORM WORK REQUIRED, TYPE I FRICTION."

4. CONCRETE SHALL HAVE A DESIRED AIR ENTRAINMENT OF 6.5% (RANGING FROM 5.0% TO 8.0%) IN ACCORDANCE WITH THE NYSDOT STANDARD SPECIFICATIONS CONSTRUCTION AND MATERIALS.

5. ALL EXPOSED EDGES OF CONCRETE SHALL BE CHAMFERED ONE INCH UNLESS OTHERWISE NOTED ON THE PLANS.

6. UNLESS OTHERWISE SHOWN ON THE PLANS THE MINIMUM COVER FOR REINFORCEMENT SHALL BE AS SHOWN ON THE TABLE BELOW:

LOCATION	COVER
WALLS ABOVE FOOTINGS	2 IN
TOP OF DECK SLAB	3 IN
BOTTOM OF DECK SLAB	1 1/2 IN
TOP AND BOTTOM OF SIDEWALK SLABS	1 1/2 IN
FOOTINGS	3 IN
PEDESTAL (TOP)	2 IN
PEDESTAL (SIDES)	3 IN
ABUTMENTS	2 IN

7. THE CONTRACTOR SHALL PAINT PORTIONS OF NEWLY–CONSTRUCTED CONCRETE BRIDGE SURFACES (IN ORDER TO MASK OBJECTIONABLE GRAFFITI) ON AN "AS–NEEDED" BASIS AS DETERMINED AND WHEN DIRECTED BY THE ENGINEER. THE CONTRACTOR SHALL PERFORM THE WORK IN ACCORDANCE WITH, AND PAYMENT SHALL BE MADE, UNDER THE PROVISIONS OF ITEM 559.19010011 "PAINTING EXISTING CONCRETE SURFACES".

8. "ANTI–GRAFFITI PROTECTION COATING" ITEM 559.90010011 SHALL BE PROVIDED TO ALL EXPOSED SURFACE OF ABUTMENT AND RETAINING WALL.

9. "PROTECTIVE SEALING FOR STRUCTURAL CONCRETE" ITEM 559.189690018 SHALL BE APPLIED TO THE FOLLOWING SURFACES:

   ABUTMENTS: ALL EXPOSED SURFACES, INCLUDING PEDESTALS, BRIDGE SEATS AND EXPOSED VERTICAL SURFACES OF BACKWALL

   RETAINING WALL: ALL EXPOSED SURFACES

   ROADWAY SURFACE OF BRIDGE DECK

10. "PROTECTIVE SEALING OF STRUCTURAL CONCRETE ON NEW BRIDGE DECKS AND BRIDGE DECK OVERLAYS" (ITEM 559.18960118) MUST BE USED ON ALL RIDING SURFACES, AND SHALL BE PENETRATING TYPE.

11. THE CONTRACTOR HAS THE OPTION TO USE PERMANENT CORRUGATED METAL FORMS WHEN POURING THE DECK. FASCIA OVERHANGS AND BAYS HAVING LONGITUDINAL JOINTS SHALL BE FORMED WITH REMOVABLE FORMS. THE FORMS USED SHALL LEAVE THE RESULTING CONCRETE FLAT SURFACED. THE COST OF FINISHING AND INSTALLING THE CORRUGATED METAL FORMS SHALL BE INCLUDED UNDER ITEM NO. 557.0101.

12. IF THE CONTRACTOR ELECTS TO USE REMOVABLE FORMS FOR THE STRUCTURAL DECK, ALL SHORING, TEMPORARY SUPPORTS, BRACING AND FALSEWORK NEEDED TO PERFORM THE WORK SHALL BE INCLUDED IN THE APPROPRIATE ITEM UNLESS OTHERWISE INDICATED.

13. THE CONTRACTOR SHOULD BE AWARE THAT THIS IS A PERFORMANCE RELATED SPECIFICATION IN WHICH THE CONTRACTOR IS RESPONSIBLE FOR COMPACTING THE PAVEMENT WITHIN A SPECIFIED DENSITY RANGE. THE CONTRACTOR MUST BE PREPARED TO SELECT, OPERATE AND CONTROL THE PAVING AND COMPACTION EQUIPMENT TO MONITOR THE RESULTS AND TO MAKE NECESSARY ADJUSTMENTS (WITHOUT DIRECTION FROM THE ENGINEER) TO ACHIEVE THE SPECIFIED DENSITY REULTS. WRITTEN INSTRUCTIONS FOR DETERMINING PAVEMENT DENSITY AND CORE LOCATIONS ARE AVAILABLE FROM THE REGIONAL MATERIALS ENGINEER OR THE DIRECTOR, MATERIALS BUREAU.

    THE PERFORMANCE GRADED BINDER USED IN THE PRODUCTION OF SUPERPAVE HOT MIX ASPHALT MIXTURES SHALL BE A PG 70–22 AS DEFINED BY AASHTO PROVISIONAL STANDARD MP1–STANDARD SPECIFICATIONS FOR PERFORMANCE GRADED ASPHALT BINDER. THE MIXTURE DESIGNS MUST BE DEVELOPED IN ACCORDANCE WITH THE CRITERIA SPECIFIED UN THE SUPERPAVE HOT MIX ASPHALT ITEMS THAT ARE APPROPRIATE FOR AN ESTIMATED TRAFFIC LEVEL OF UNDER 3 MILLION 80KN ESALs. UNDER NO CIRCUMSTANCES SHALL THE PERFORMANCE GRADED BINDER CONTENT IN THE HOT MIX ASPHALT BE LESS THAN 5.6% FOR A 9.5mm DESIGN, 5.0% FOR A 12.5mm DESIGN, 4.3% FOR A 19.0mm DESIGN, OR 4.0% FOR A 25mm DESIGN.

STRUCTURAL STEEL

1. ALL STRUCTURAL STEEL SHALL MEET THE REQUIREMENTS OF ASTM A709, GRADE 50W UNLESS OTHERWISE INDICATED.

2. ALL BOLTED CONNECTIONS SHALL BE SLIP–CRITICAL AND MADE WITH ASTM A325, TYPE 1, 7/8" DIAMETER HIGH STRENGTH BOLTS UNLESS OTHERWISE NOTED ON THE PLANS.

3. ALL WELDING SHALL CONFORM TO THE NEW YORK STATE STEEL CONSTRUCTION MANUAL 3RD EDITION, DATED MARCH 2008 WITH CURRENT EDITION AND MODIFICATIONS (NYSSCM). ALL WELDERS MUST BE QUALIFIED IN ACCORDANCE WITH THE NYSSCM.

4. ALL GROOVE WELDS SHALL BE FULL PENETRATION WELDS.

5. ALL WELDING ELECTRODES SHALL BE E70XX SERIES CONFORMING TO THE NYSSCM AND APPLICABLE AWS ELECTRODE SPECIFICATION.

6. ALL NEW STRUCTURAL STEEL SHALL BE PAINTED IN ACCORDANCE WITH THE NYCDOT PAINTING SPECIFICATION ITEM 831.01, SYSTEM "A"–ALL COATS APPLIED IN SHOP. THE PAINT COLOR OF THE NEW STEEL SHALL BE AS SPECIFIED OR AS DIRECTED BY THE ENGINEER. THE AREA OF STEEL THAT WILL COME INTO CONTACT WITH THE NEW CONCRETE SHALL BE PRIME ONLY.

7. THE CONTRACTOR SHALL PROVIDE FOR THE STABILITY OF STRUCTURAL STEEL DURING ALL PHASES OF ERECTION AND CONSTRUCTION, AS PROVIDED IN PARAGRAPH 204.2 OF "THE NEW YORK STATE STEEL CONSTRUCTION MANUAL" (NYSCM), THIRD EDITION, DATED MARCH 2008

8. THIS STRUCTURE CONTAINS FRACTURE–CRITICAL MEMBERS. THESE MEMBERS ARE IDENTIFIED ON THE PLANS. THE CONTRACTOR SHALL COMPLY WITH THE APPLICABLE PROVISIONS OF SECTION 9 OF THE NEW YORK STATE STEEL CONSTRUCTION MANUAL (SCM).

NONDESTRUCTIVE TESTING (NDT) OF WELDS

ALL NON–DESTRUCTIVE TESTING (NDT) REQUIREMENTS AS SPECIFIED IN THE NEW YORK STATE STEEL CONSTRUCTION MANUAL (NYSSCM) AND THE FOLLOWING ADDITIONAL NON–DESTRUCTIVE TESTING (NDT) REQUIREMENTS SHALL BE PERFORMED BY THE CONTRACTOR. COSTS OF ALL NON–DESTRUCTIVE TESTING (NDT) SHALL BE CONSIDERED INCIDENTAL TO THE STRUCTURAL STEEL FABRICATION OR ERECTION OR BOTH, AND NO SEPERATE PAYMENT SHALL BE MADE.

1. ALL COMPLETE JOINT PENETRATION GROOVE (CJPG) WELDS IN BUTT JOINTS SUBJECT TO CALCULATED TENSION OR REVERSAL OF STRESS SHALL BE TESTED BY RADIOGRAPHIC TESTING (RT) 100%.

2. ALL COMPLETE JOINT PENETRATION (CJPG) WELDS IN TEE AND CORNER JOINTS SUBJECT TO CALCULATED TENSION OR REVERSAL OF STRESS SHALL BE TESTED BY ULTRASONIC TESTING (UT) 100%.

3. TWENTY–FIVE (25) PERCENT OF THE REMAINING PORTION OF COMPLETE JOINT PENETRATION GROOVE (CJPW) BUTT WELDS IN GIRDER FLANGES OR GIRDER WEBS IN AREAS OF THE WEB NOT TESTED IN ACCORDANCE WITH NYSSCM 1602.2 SHALL BE TESTED BY RADIOGRAPHIC TESTING (RT).

4. IF UNACCEPTABLE DISCONTINUITIES ARE FOUND IN THE WEB WHEN TESTED IN ACCORDANCE WITH NYSSCM 1602.2 OR AS SPECIFIED IN (3) ABOVE THE REMAINDER OF THE WELD SHALL BE TESTED.

5. ALL WELDS MADE BY EITHER THE ELECTROSLAG WELDING (ESW) OR ELECTROGAS (EGW) PROCESSES SHALL BE TESTED BY BOTH RADIOGRAPHIC TESTING (RT) AND ULTRASONIC TESTING (UT).

6. ALL OTHER COMPLETE JOINT PENETRATION GROOVE (CJPW) WELDS NOT PREVIOUSLY TESTED IN COMPRESSION OR SHEAR MAY BE TESTED BY RADIOGRAPHIC TESTING (RT) OR ULTRASONIC TESTING (UT) AT THE FOLLOWING FREQUENCY:

   (A) TWENTY–FIVE PERCENT OF EACH JOINT SUBJECT TO COMPRESSION OR SHEAR, OR, AT THE CONTRACTOR'S OPINION, 25 PERCENT OF THE TOTAL JOINTS SUBJECT TO COMPRESSION OR SHEAR. WHEN THE LATTER IS SELECTED, THE TESTED JOINTS SHALL BE DISTRIBUTED THROUGHOUT THE WORK AND SHALL TOTAL AT LEAST 25 PERECENT OF THE COMPRESSION OR SHEAR WELD LENGTH.
   (B) IF UNACCEPTABLE DISCONTINUITIES ARE FOUND IN SPOT TESTING, THE ENTIRE LENGTH SHALL BE TESTED.
   (C) IF UNACCEPTABLE DISCONTINUITIES ARE FOUND IN 20 PERCENT OR MORE OF THE COMPRESSION OR SHEAR JOINTS IN A "LOT," ALL COMPRESSION AND SHEAR JOINTS IN THAT "LOT" SHALL BE TESTED FOR THEIR FULL LENGTH. A LOT IS DEFINED AS THOSE TENSION OR COMPRESSION/SHEAR JOINTS OR BOTH, WHICH WERE WELDED IN CONFORMANCE WITH THE SAME APPROVED WELDING PROCEDURE SPECIFICATION (WPS) AND TESTED WITH NON–DESTRUCTIVE TESTING (NDT) AS A GROUP.
   (D) UNLESS OTHERWISE SPECIFIED IN THE CONTRACT DOCUMENTS, THE ABOVE REQUIREMENTS DO NOT APPLY TO LONGITUDINAL BUTT JOINTS IN BEAM OR GIRDER WEBS. THESE WELDS SHALL BE SUBJECT TO THE INSPECTION CRITERIA OF SECTION (8) PARAGRAPH A. AS DESCRIBED BELOW.

7. THE REQUIREMENTS FOR RADIOGRAPHIC TESTING (RT) AND ULTRASONIC TESTING (UT) SHALL APPLY EQUALLY TO SHOP AND FIELD WELDS.

8. UNLESS OTHERWISE SPECIFIED, LONGITUDINAL BUTT JOINTS IN BEAM OR GIRDER WEBS, FILLET WELDS AND PARTIAL JOINT PENETRATION GROOVE (PJPG) WELDS JOINING PRIMARY COMPONENTS OF MAIN MEMBERS SHALL BE QUALITY CONTROL (QC) TESTED USING MAGNETIC PARTICLE TESTING (MT) IN CONFORMANCE WITH THE FOLLOWING:

   (A) AT LEAST 300MM (12IN) SHALL BE TESTED IN EVERY 3M (10FT) LENGTH INCLUDING LONGITUDINAL WELDS IN BUTT JOINTS IN BEAM OR GIRDER WEBS, AND 300MM (12IN) OF SUCH WELDS LESS THAN 3M (10FT) IN LENGTH OF EACH SIZE OF WELD AND TYPE OF JOINT IN MAIN MEMBERS INCLUDING THE END CONNECTIONS FOR SUCH MEMBERS. TYPICAL WELDS WHICH REQUIRE TESTING ARE WEB TO FLANGE, DIAPHRAGM CONNECTION PLATES TO WEB OR FLANGE, DIAPHRAGM SEALING PLATE OR GUSSETS TO WEB OR FLANGE IN BOX MEMEBERS; CROSS FRAME AND DIAPHRAGM WELDS ON CURVED BRIDGES, ETC. IF UNACCEPTABLE DISCONTINUITIES ARE FOUND IN ANY TEST LENGTH OF WELD THE FULL LENGTH OF THE WELD, OR 1.5M (5FT) ON BOTH SIDES OF THE TEST LENGTH, WHICHEVER IS LESS, SHALL BE TESTED.

9. FOR GRADE 690/690W (100/100W) STEELS, ALL MAIN MEMBER FILLET AND PARTIAL PENETRATION GROOVE (PJPG) WELDS SHALL BE TESTED FULL–LENGTH BY MAGNETIC PARTICLE TESTING (MT).

10. MAGNETIC PARTICLE TESTING (MT) OF FILLET WELDS SHALL NOT BE REQUIRED FOR SECONDARY MEMBERS (MEMBERS THAT DO NOT CARRY LIVE LOAD DIRECTLY. CROSSFRAMES OR DIAPHRAGMS IN CURVED STRUCTURES ARE CONSIDERED MAIN MEMBERS).

11. AFTER REPAIRS OF DISCONTINUITIES HAVE BEEN MADE, ADDITIONAL NON–DESTRUCTIVE TESTING (NDT) INSPECTION SHALL BE PERFORMED TO ENSURE THAT THE REPAIRS ARE SATISFACTORY. THIS TESTING SHALL INCLUDE THE REPAIRED AREA PLUS AT LEAST 50MM (2IN) ON EACH SIDE OF THE REPAIRED AREA.

CONSTRUCTION EQUIPMENT

1. IT IS THE CONTRACTOR'S RESPONSIBILITY TO DETERMINE THE TYPE, SIZE AND WEIGHT OF ALL VEHICLES THAT CAN BE USED SAFELY ON THE STRUCTURES DURING CONSTRUCTION. THIS DETERMINATION SHALL BE BASED ON THE CONDITION OF THE EXISTING STRUCTURE AND BE DONE PRIOR TO THE PLACEMENT OF THE CONTRACTOR'S EQUIPMENT. THIS DETERMINATION SHALL BE MADE BY A NEW YORK STATE LICENSED PROFESSIONAL ENGINEER EMPLOYED AND PAID FOR BY THE CONTRACTOR AND APPROVED BY THE ENGINEER. APPROVAL BY THE ENGINEER IN NO WAY RELIEVES THE CONTRACTOR OF HIS RESPONSIBILITIES. THE COST FOR REPAIRS OR SHORING TO IMPROVE THE CONDION OF THE STRUCTURE, TO ALLOW FOR THE CONTRACTOR'S EQUIPMENT, SHALL BE BORNE BY THE CONTRACTOR. A COPY OF THE LATEST INSPECTION REPORT AND LIST OF FLAGS SHALL BE MADE AVAILABLE TO THE CONTRACTOR. IT IS THE CONTRACTOR'S RESPONSIBILITY TO OBTAIN PRIOR APPROVAL FOR OVERWEIGHT / OVERSIZE VEHICLES.

2. THE CONTRACTOR SHALL SUBMIT TO THE ENGINEER THE PROPOSED METHOD OF WORK, SCHEDULE AND IDENTIFICATION OF EQUIPMENT TO BE USED, PRIOR TO START OF CONSTRUCTION.

SURVEY, PRESERVATION OF MONUMENTS, POINTS AND STAKES

1. ALL ELEVATIONS ARE ACTUAL AND REFERENCED TO THE VERTICAL DATUM USED BY THE TOPOGRAPHIC BUREAU, BOROUGH OF MANHATTAN, WHICH IS 2.75 FEET ABOVE THE NATIONAL GEODETIC SURVEY VERTICAL DATUM OF 1929 (UNITED STATES COAST AND GEODETIC SURVEY), MEAN SEA LEVEL, SANDY HOOK, NEW JERSEY.

CONTRACT NO.	CD NO. M79

TEMPORARY ACCESS ROAD
RIVERSIDE BOULEVARD
WEST 59TH STREET TO WEST 61ST STREET
BOROUGH OF MANHATTAN

GENERAL NOTES - I

DWG. NO.	SCALE	DATE	SHEET
GN-1	NONE	09-15-2014	4 OF 68

The RBA Group — ENGINEERS • ARCHITECTS • PLANNERS
27 UNION SQUARE WEST
NEW YORK, NEW YORK 10003

0 1 2 3 4
ORIGINAL SIZE IN INCHES

PREPARED BY THE RBA GROUP
IN CHARGE LR DRAFTER RJF
DESIGNER WS CHECKER WS

RBA - RIVERSIDE BOULEVARD - TEMPORARY ACCESS ROAD
FILE: TAR_GN1

2. THE REFERENCE BENCH MARK IS THE COAST AND GEODETIC SURVEY B.M. V-44 IN 6" GRANITE WATER TABLE 4.3' S. OF S.B.L. OF W. 59TH ST. S.W. COR. W. 59TH ST. AND 11TH AVE. 2.35' ABOVE SIDEWALK.

3. A NEW YORK STATE LICENSED SURVEYOR SHALL SUBMIT CROSS SECTION ON A 10' GRID PRIOR TO AND AFTER EXCAVATION, AND SUBSEQUENT TO PLACEMENT OF EACH LAYER OF FILL MATERIAL, I.E. SUBBASE, CONCRETE, ASPHALT, ETC.. THIS INFORMATION SHALL BE GIVEN TO THE RESIDENT ENGINEER FOR HIS APPROVAL, RECORDS AND USE. THE COST OF THIS WORK SHALL BE INCLUDED IN THE APPROPRIATE ITEMS OF THE CONTRACT.

4. A NEW YORK STATE LICENSED SURVEYOR SHALL PROVIDE A CROSS SECTION OF THE BRIDGE DECK AFTER STEEL BEAMS ARE PLACED. THIS SURVEY WORK SHALL BE PERFORMED AS DIRECTED BY THE RESIDENT ENGINEER. THE COST FOR SURVEY WORK SHALL BE INCLUDED UNDER ITEM 625.01 "SURVEY OPERATIONS".

5. THE CONTRACTOR SHALL SAFEGUARD ALL POINTS, STAKES, GRADE MARKS, MONUMENTS AND BENCH MARKS, MADE OR ESTABLISHED ON OR NEAR THE LINE OF THE WORK, AND AGREES TO ACCEPT THE RESPONSIBILITY FOR AND TO REMEDY AT HIS COST ANY MISTAKES THAT MAY BE CAUSED BY THE UNAUTHORIZED DISTURBANCE OR REMOVAL OF SUCH POINTS, STAKES, GRADE MARKS, MONUMENTS AND BENCH MARKS. THE CONTRACTOR SHALL NOT DISTURB OR EXCAVATE WITHIN FIVE (5) FEET OF ANY CITY MONUMENT WHICH MAY BE WITHIN THE LIMITS OF OR BE DISTURBED BY THE WORK HEREIN CONTEMPLATED, OR IN ANY MANNER DISTURB THE SAME, BUT SHALL CEASE WORK AT SUCH PLACES UNTIL THE SAID MONUMENT HAS BEEN REFERENCED AND RESET OR OTHERWISE DISPOSED OF EXCEPT UPON SPECIAL PERMIT FROM THE COMMISSIONER IN ACCORDANCE WITH THE CITY ORDINANCE THEREFOR. AFTER PERMISSION IS GIVEN TO REMOVE ANY MONUMENT, THE CONTRACTOR SHALL TAKE UP AND PRESERVE SUCH MONUMENT AND, IF REQUIRED, DELIVER SAME TO THE NEAREST BUREAU YARD.

6. ANY EXPENSE INCURRED IN REPLACING ANY POINTS, STAKES OR BENCH MARKS, WHICH THE CONTRACTOR, OR ANY PERSON WORKING UNDER HIM, MAY HAVE FAILED TO PRESERVE, SHALL BE CHARGED TO THE CONTRACTOR AND DEDUCTED FROM THE AMOUNT TO BE PAID HIM FOR DOING THE WORK UNDER THIS CONTRACT.

SUBSTRUCTURE

1. EXCAVATION BELOW PLANNED FOOTING ELEVATION WILL NOT BE ALLOWED WITHOUT WRITTEN PERMISSION FROM THE ENGINEER. BACKFILL OF UNAUTHORIZED EXCAVATIONS BELOW OR BEYOND PAYMENT LINES WILL BE AT THE CONTRACTOR'S EXPENSE. BACKFILL MATERIAL WILL BE PAID UNDER "FOOTING CONCRETE, CLASS HP" ITEM 555.08, UNLESS OTHERWISE DIRECTED BY THE ENGINEER.

2. ALL PLACEMENTS OF SELECT STRUCTURE FILL, ITEM 203.21, SHALL BE COMPACTED TO 95 PERCENT OF STANDARD PROCTOR MAXIMUM DENSITY, AS DEFINED UNDER SUBSECTION 203-3.12 – COMPACTION OF THE NYSDOT STANDARD SPECIFICATION FOR CONSTRUCTION AND MATERIALS. THE INSTALLATION OF SELECT STRUCTURE FILL, AS SHOWN ON THE STRUCTURAL PLANS, SHALL BE DONE IMMEDIATELY FOLLOWING THE COMPLETION OF THE CURING FOR THE ABUTMENTS OR WALLS. THE UNIT WEIGHT OF SELECT STRUCTURE FILL SHALL BE AT LEAST 120 LBS PER CUBIC FEET.

3. ALL EXCAVATION AND EMBANKMENTS SHALL BE KEPT FREE OF WATER, ICE AND SNOW.

4. THE CONTRACTOR, WITH THE PERMISSION OF THE DEPUTY CHIEF ENGINEER (STRUCTURES), MAY ELECT TO INTRODUCE CONSTRUCTION JOINTS IN THE ABUTMENTS AT LOCATIONS NOT SHOWN ON THE PLANS. THESE CONSTRUCTION JOINTS SHALL BE PROVIDED WITH SHEAR KEYS AND WATERSTOPS.

5. WHERE OUTLETS ARE SHOWN IN ABUTMENTS AND WALLS. THE OUTLET SHALL BE COVERED BY A 2 FOOT BY 2 FOOT SQUARE OF GEOTEXTILE, BEDDING CONFORMING TO THE REQUIREMENTS OF NYSDOT STANDARD SPECIFICATIONS (US CUSTOMARY), SECTION 207. THE FABRIC SHALL BE SECURELY ATTACHED IN A MANNER APPROVED BY THE ENGINEER. THE COST OF THE FABRIC SHALL BE INCLUDED IN THE UNIT PRICE BID FOR GEOTEXTILE DRAINAGE, ITEM 207.22.

EXPANSION END MATERIAL OPTIONS:

N.Y.S. MAT. SPEC. 702-0700-ASPHALT FILLER
FED. MAT. SPEC. SS-S-00195B-ELASTOMERIC POLYMER TYPE, TWO COMPONENT COLD APPLIED.
FED. MAT. SPEC. SS-S-00200D-ELASTOMERIC POLYMER TYPE, TWO COMPONENT JET FUEL RESISTANT, COLD APPLIED

FIXED END MATERIAL OPTIONS:

**N.Y.S. MAT. SPEC. 721-01-EPOXY RESIN SYSTEM WITH SAND.
**N.Y.S. MAT. SPEC. 721-03-EPOXY POLYSULFIDE GROUT WITH SAND.
N.Y.S. MAT. SPEC. 701-05-CONCRETE GROUTING MATERIAL.
N.Y.S. MAT. SPEC. 701-06-CEMENT BASED GROUT MATERIALS FOR SHEAR KEYS.
**-BONE-DRY, SANDBLAST SAND SHALL BE ADDED IN THE RATIO OF (1) PART EPOXY TO (2) PARTS SAND BY VOLUME.

FOUNDATION NOTES

1. HP 12X74 PILES OR APPROVED EQUIVALENT WITH A DRIVING TIP SHALL BE DRIVEN TO END BEARING ON BEDROCK. THE MAXIMUM ALLOWABLE CAPACITY IS 120 TONS PER PILE. PILES SHALL BE LOAD TESTED TO AN ULTIMATE CAPACITY OF 240 TONS (SAFETY FACTOR=2) USING BOTH STATIC AND DYNAMIC LOAD TESTS IN ACCORDANCE WITH NYS DOT REQUIREMENTS. FOR TEST PILE LOCATIONS AND PILE LOAD TESTING AND TOLERANCE NOTES SEE DRAWING NO. ST-8, ST-18, AND ST-25.

2. TEST PILE DRIVING CRITERIA: PILES SHALL BE DRIVEN TO SOUND ROCK, TO REFUSAL OR TO A FINAL DRIVING RESISTANCE OF 5 BLOWS PER 1/4" FOR THE LAST 20 BLOWS USING A SINGLE ACTING AIR HAMMER HAVING A MIN. RATED ENERGY OF 32,500 FT-LBS.

3. DRIVING POINT SHALL BE HP HARD BITE POINT MANUFACTURED BY ASSOCIATED PILE AND FITTING OR APPROVED EQUAL.

4. PRODUCTION PILES WILL BE ACCEPTABLE ONLY WHEN DRIVEN IN ACCORDANCE WITH SECTION 551 – PILES AND PILE DRIVING EQUIPMENT OF THE NEW YORK STATE D.O.T. SPECIFICATIONS AND DRIVING CRITERIA AND APPROVED BY THE ENGINEER BASED ON PILE LOAD TEST.

5. THE WATER LEVELS NOTED ON THE BORING LOGS AND ON THE SUBSURFACE PROFILE DRAWING INCLUDED IN THE PLANS FOR THIS STRUCTURE MAY NOT BE INDICATIVE OF ACTUAL WATER CONDITIONS AT THE TIME OF CONSTRUCTION. DEWATERING OF EXCAVATIONS MAY, THEREFORE, BE REQUIRED. FOR DETAILED DESCRIPTION OF SUBSURFACE MATERIAL, SEE SUBSURFACE INVESTIGATION REPORT DATED NOVEMBER 3, 2008 PREPARED BY MUESER RUTLEDGE CONSULTING ENGINNERS AND AVAILABLE AT REQUEST.

6. DEWATERING OF EXCAVATIONS REQUIRES COVERAGE UNDER SPDES GENERAL PERMIT FOR STORMWATER DISCHARGES FROM CONCSTRUCTION ACTIVITY PERMIT NO. GP-0-10-001. CONTRACTOR MUST FILE A NOTICE OF INTENT WITH NYSDEC FOR COVERAGE UNDER THIS PERMIT. ONLY UNCONTAMINATED DISCHARGES OF GROUNDWATER OR OTHER WATER FROM EXCAVATIONS IS PERMITTED. ACCORDINGLY CONTRACTOR MUST PREPARE A STORMWATER POLLUTION PREVENTION PLAN (SWPPP).

7. BORING LOG INDICATES PETROLEUM ODOR AT 35 FEET BELOW GRADE. IF CONTAMINATED SOIL IS PRESENT THEN ALL EXCAVATION OF CONTAMINATED AND/OR REGULATED SOILS/SEDIMENTS MUST BE IN ACCORDANCE WITH NYSDEC REGULATIONS. SPECIFIC PROCEDURES DETAILING METHODS USED FOR MANAGING, HANDLING AND TRANSPORTING OF CONTAMINATED SOILS MUST BE SUBMITTED TO THE NYCDOT FOR REVIEW AND APPROVAL. THE CONTRACTOR MUST PREPARE A SITE HEALTH & SAFETY PLAN FOR ALL WORK INVOLVED WITH CONTAMINATED SOILS. ALL EQUIPMENT AND PERSONNEL MUST BE PROPERLY DECONTAMINATED. SHOULD GROUNDWATER BE ENCOUNTERED DURING EXCAVATION, DEWATERING OPERATIONS MUST BE IN ACCORDANCE WITH ALL ENVIRONMENTAL REGULATIONS. DISCHARGE OF GROUND WATER, DEWATERING FLUIDS OR WASTEWATER IS NOT PERMITTED UNLESS THE APPROPRIATE PERMITS ARE IN PLACE. THE NYSDEC MUST BE NOTIFIED OF ANY EXISTING SPILL UNCOVERED DURING EXCAVATION ACTIVITIES.

8. ALL EXPOSED SOILS AND DISTURBED EARTH, INCLUDING, BUT NOT LIMITED TO, SOIL STOCKPILES, EMBANKMENTS, SLOPES, CUTS, ETC SHALL BE PROTECTED FROM SOIL EROSION BY THE USE OF PROTECTIVE SOIL COVERS SUCH AS MULCH, JUTE FABRIC, ETC. ALL SOIL PROTECTION MATERIALS SHALL BE APPROVED BY THE ENGINEER AND THE NYCDOT ENVIRONMENTAL ENGINEERING UNIT. ALL SOIL STOCKPILES SHALL BE SURROUNDED BY SILT FENCES AND HAY BALES TO CONTAIN SEDIMENTS FROM STORMWATER RUNOFF.

ALL SILT FENCING, HAY BALES AND OTHER STORMWATER AND EROSION CONTROLS SHALL BE MAINTAINED THROUGHOUT THE PROJECT. THESE CONTROLS SHALL REMAIN FREE OF WEED AND PLANT GROWTH. DETERIORATED HAY BALES SHALL BE REPLACED AS NEEDED AT THE DIRECTION OF THE ENGINEER.

USE OF EXISTING EXCAVATED MATERIALS AS BACKFILL WILL REUIRE SAMPLING TO ENSURE THE MATERIAL IS NOT CONTAMINATED. BENEFICIAL USE OF BACKFILL WILL REQUIRE NYSDEC APPROVAL.

DISCHARGE OF ANY WASTE WATER TO THE ENVIRONMENT IS NOT PERMITTED. ALL DISCHARGES MUST BE PROPERLY MANAGED IN ACCORDANCE WITH ALL APPLICABLE REGULATIONS. IN ORDER TO DISCHARGE TO THE NYCDEP SEWER SYSTEM A DISCHARGE PERMIT FROM THE NYCDEP IS REQUIRED. DISCHARGES TO A WATER WAY, ANY AREA WHERE SURGACE OR GROUND WATER CAN BE IMPACTED, GROUNDWATER, ETC. REQUIRES A SPDES PERMIT FROM THE NYSDEC.

THE NYSDEC WILL REQUIRE COLLECTION AND ANALYSIS OF ANY CONCRETE WASH WATER, CONCRETE LEACHATE, WASTE WATER, DREDGE WATER, LIQUIDS, ETC. PRIOR TO DISCHARGE. PUMPING OF COFFERDAMS, SETTLING BASINS, ETC. AND DISCHARGING TO LAND IS NOT PERMITTED. SAMPLING AND ANALYSIS OF ALL GROUNDWATER, DISCHARGE WATER, DREDGE WATER AND ANY OTHER WASTE WATER MUST BE PERFORMED IN ORDER TO DETERMINE COMPLIANCE WITH THE NYCDEP AND NYSDEC DISCHARGE STANDARDS. ANY WASTE WATER NOT MEETING THE DISCHARGE STANDARDS, OR IF A DISCHARGE OR SPDES PERMIT IS NOT AVAILABLE, MUST BE TRANSPORTED AND DISPOSED OF OFF-SITE AT A LICENSED AND APPROVED TREATMENT, STORAGE, DISPOSAL FACILITY.

SPILLS OF PETROLEUM PRODUCTS OR CHEMICALS REQUIRE NOTIFICATION TO THE NYSDEC. THE NATIONAL RESPONSE CENTER AND THE NYCDOT.

IF THE PROJECT DISTURBS ONE ACRE OR MORE (STAGING AREA, BRIDGE, ETC.) THEN COMPLIANCE WITH THE SPDES GENERAL PERMIT FOR STORMWATER DISCHARGES IS REQUIRED AS PER THE NYSDEC. COVERAGE UNDER THE GENERAL PERMIT IS OBTAINED BY FILING A NOTICE OF INTENT (NOI). ALONG WITH THE NOI A STORM WATER POLLUTION PREVENTION PLAN (SWPPP) MUST BE DEVELOPED AND IMPLEMENTED IN ACCORDANCE WITH THE GENERAL PERMIT. THE SWPPP MUST BE DEVELOPED IN ACCORDANCE WITH TECHNICAL GUIDELINES PROVIDED IN THE DOCUMENT "NEW YORK STANDARDS AND SPECIFICATIONS FOR EROSION AND SEDIMENT CONTROL". THE SWPPP SHALL INCLUDE, BUT NOT BE LIMITED TO, PROJECT DESCRIPTION, SITE MAP AND CONSTRUCTION DRAWINGS, DESCRIPTION OF SITE SOILS, CONSTRUCTION PHASING PLAN, EROSION AND SEDIMENT CONTROL MEASURES, CONSTRUCTION AND OTHER WASTE MATERIALS CONTROLS, TEMPORARY AND PERMANENT STRUCTURAL AND VEGETATIVE MEASURES, MAP/DRAWINGS OF SEDIMENT CONTROL MEASURES, EROSION AND SEDIMENT CONTROL SPECIFICATIONS, TEMPORARY PRACTICES TO BECOME PERMANENT, STAGING AND TIMING OF PRACTICES, EROSION AND SEDIMENT CONTROL MAINTENANCE SCHEDULE, NAME(S) OF RECEIVING WATERS, SWPPP IMPLEMENTATION RESPONSIBILITIES, STRUCTURAL PRACTICES FOR FLOW DIVERSION AND ANY EXISTING DATA ON RUNOFF CHARACTERISTICS.

THE CITY'S NEW NOISE CODE, LOCAL LAW 113 OF 2005, TOOK EFFECT ON JULY 1, 2007. THE CONSTRUCTION RULES THAT WERE WRITTEN IN COORDINATION WITH THE NEW NOISE CODE ESTABLISH A UNIQUE NOISE MITIGATION PLAN FOR EACH CONSTRUCTION SITE, OFFERING ALTERNATIVES FOR CONTRACTORS TO CONTINUE THEIR IMPORTANT CONSTRUCTION TASKS WHILE HAVING LESS NOISE IMPACT ON THE SURROUNDING ENVIRONMENT. CONTRACTOR MUST PREPARE A CONSTRUCTION NOISE MITIGATION PLAN. IF COMPLIANCE WITH THE NOISE CODE IS NOT POSSIBLE, OR WORK WILL TAKE PLACE OFF-HOURS OR ON WEEKENDS, THEN THE CONTRACTOR MUST PREPARE AN ALTERNATE NOISE MITIGATION PLAN FOR APPROVAL BY THE NYCDEP.

CONTRACTOR NEEDS TO COMPLY WITH LOCAL LAW 77 OF 2003. THE LAW AMENDED THE ADMINISTRATIVE CODE OF THE CITY OF NEW YORK IN RELATION TO THE USE OF ULTRA LOW SULFUR DIESEL FUEL ("ULSDF") AND THE BEST AVAILABLE TECHNOLOGY ("BAT") BY NON-ROAD VEHICLES IN CITY CONSTRUCTION. THE LAW REQUIRES THAT ANY DIESEL-POWERED NON-ROAD VEHICLE, FIFTY HORSEPOWER AND GREATER, THAT IS OWNED BY, OPERATED BY OR ON BEHALF OF, OR LEASED BY A CITY AGENCY BE POWERED BY ULSDF AND UTILIZE BAT FOR REDUCING THE EMISSION OF POLLUTANTS.

ALL WASTE FROM CONCRETE OPERATIONS MUST BE MANAGED IN ACCORDANCE WITH ALL APPLICABLE REGULATIONS. DISCHARGE OF CONCRETE WASH OUT WATER AND LEACHATE TO THE GROUND, WATER WAYS, GROUND WATER, STORM WATER SEWER OR COMBINED SEWER IS NOT PERMITTED. CONCRETE WASHOUT WATER FROM MIXER TRUCKS SHALL BE COLLECTED AND EITHER ALLOWED TO EVAPORATE FROM MUD BINS, CONTAINERS, ETC; RETURNED TO THE CONCRETE BATCH PLANT FOR TREATMENT; TREATED ONSITE FOR DISCHARGE INTO THE SEWER SYSTEM IN ACCORDANCE WITH STANDARDS SET FORTH IN A SITE SPECIFIC NYCDEP DISCHARGE PERMIT.

THE CONTRACTOR SHALL BE RESPONSIBLE FOR MANAGING UNIVERSAL WASTE GENERATED ON THE PROJECT. UNIVERSAL WASTE CONSISTS OF LIGHT BULBS/LAMPS, BATTERIES AND MERCURY-CONTAINING EQUIPMENT. UNIVERSAL WASTE MUST BE MANAGED IN ACCORDANCE WITH NYSDEC AND US EPA REGULATIONS AND NYCDOT REQUIREMENTS.

RBA - RIVERSIDE BOULEVARD - TEMPORARY ACCESS ROAD
FILE: TAR_GN2

The RBA Group ENGINEERS • ARCHITECTS • PLANNERS
27 UNION SQUARE WEST
NEW YORK, NEW YORK 10003

0 1 2 3 4
ORIGINAL SIZE IN INCHES

PREPARED BY	THE RBA GROUP		
IN CHARGE	LR	DRAFTER	RJF
DESIGNER	WS	CHECKER	WS

CONTRACT NO. | CD NO. M79

TEMPORARY ACCESS ROAD
RIVERSIDE BOULEVARD
WEST 59TH STREET TO WEST 61ST STREET
BOROUGH OF MANHATTAN

GENERAL NOTES - II

DWG. NO.	SCALE	DATE	SHEET
GN-2	NONE	09-15-2014	5 OF 68

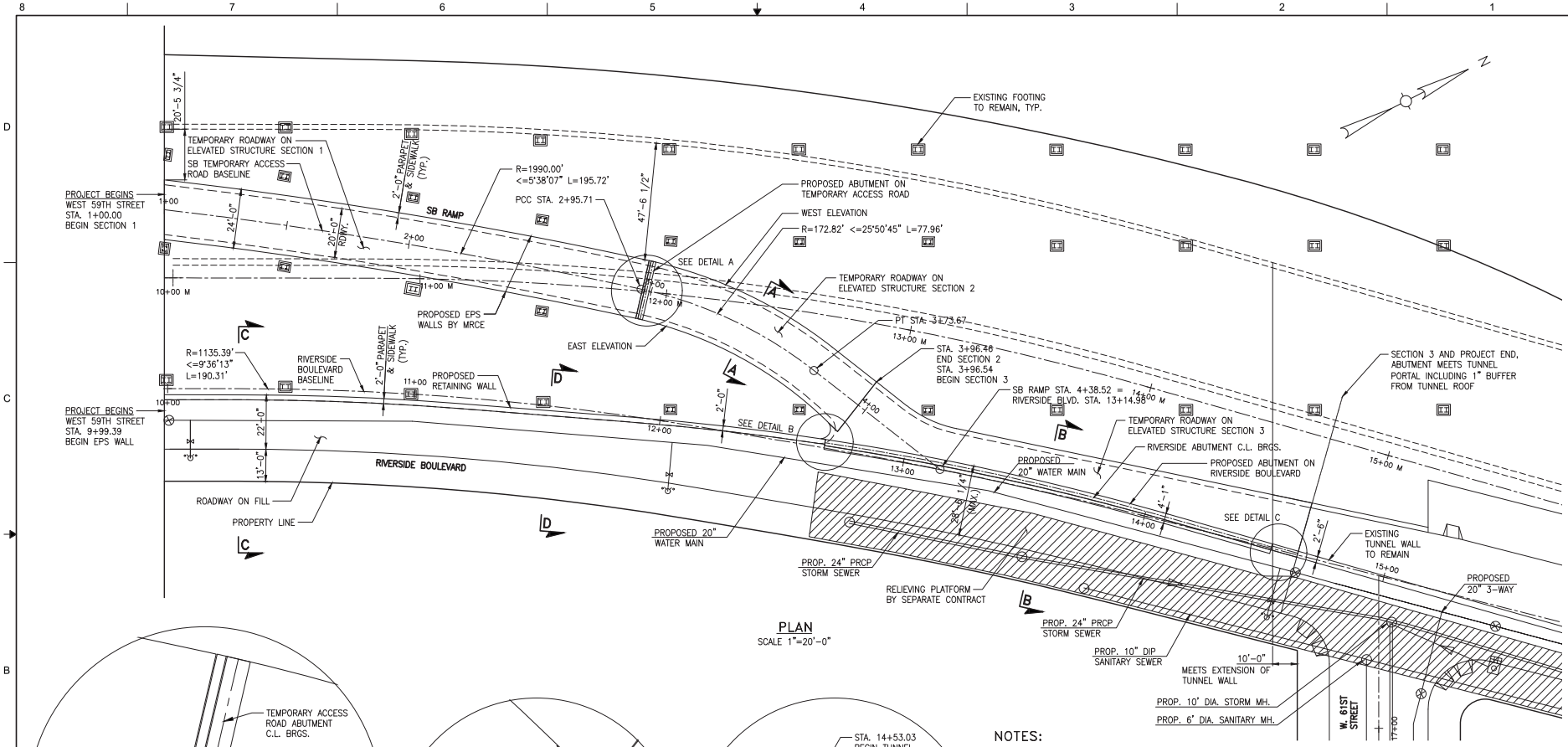

PLAN
SCALE 1"=20'-0"

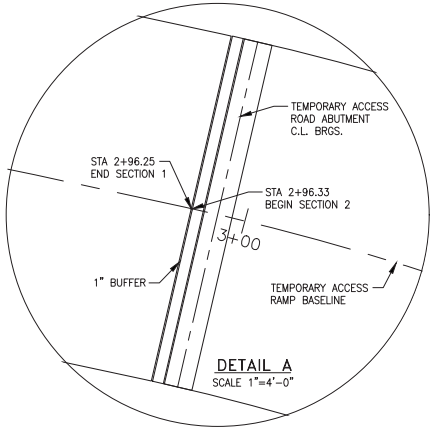

DETAIL A
SCALE 1"=4'-0"

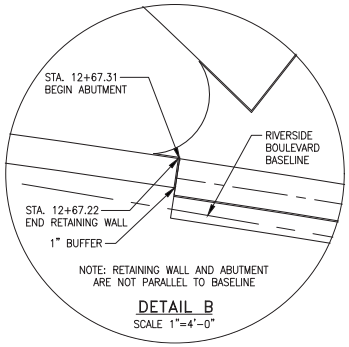

DETAIL B
SCALE 1"=4'-0"

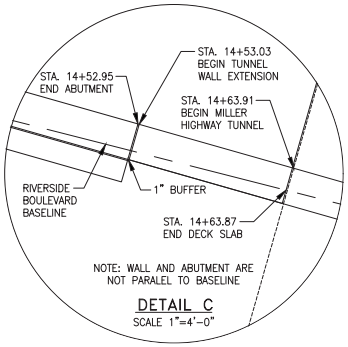

DETAIL C
SCALE 1"=4'-0"

NOTES:

1. BASE PLAN PROVIDED BY PHILIP HABIB & ASSOCIATES.
2. EXISTING MILLER HIGHWAY SURVEY DATA PROVIDED BY MANHATTAN SURVEYING, OCTOBER, 2007.
3. ALL TIE-IN POINTS BETWEEN EXISTING AND PROPOSED STRUCTURES SHALL BE FIELD VERIFIED BY CONTRACTOR PRIOR TO CONSTRUCTION.

REFERENCES:

1. FOR GENERAL NOTES, SEE DWG. NOS. GN-1 AND GN-2.
2. FOR SECTION A-A, SEE DWG NO. ST-2.
3. FOR SECTION B-B, SEE DWG. NO. ST-3.
4. FOR SECTION C-C AND D-D, SEE DWG. NO. ST-4.
5. FOR MUESER RUTLEDGE CONSULTING ENGINEERS DRAWINGS, SEE DWG. NO. MR-1 TO MR-4, AND B-1 TO B-15.

The RBA Group — ENGINEERS • ARCHITECTS • PLANNERS
27 UNION SQUARE WEST
NEW YORK, NEW YORK 10003

0 1 2 3 4
ORIGINAL SIZE IN INCHES

PREPARED BY	THE RBA GROUP		
IN CHARGE	LR	DRAFTER	RJF
DESIGNER	WS	CHECKER	WS

CONTRACT NO.	CD NO. M79

TEMPORARY ACCESS ROAD
RIVERSIDE BOULEVARD
WEST 59TH STREET TO WEST 61ST STREET
BOROUGH OF MANHATTAN

GENERAL PLAN

DWG. NO.	SCALE	DATE	SHEET
ST-1	AS SHOWN	09-15-2014	6 OF 68

RBA - RIVERSIDE BOULEVARD - TEMPORARY ACCESS ROAD
FILE: TAR_PLN

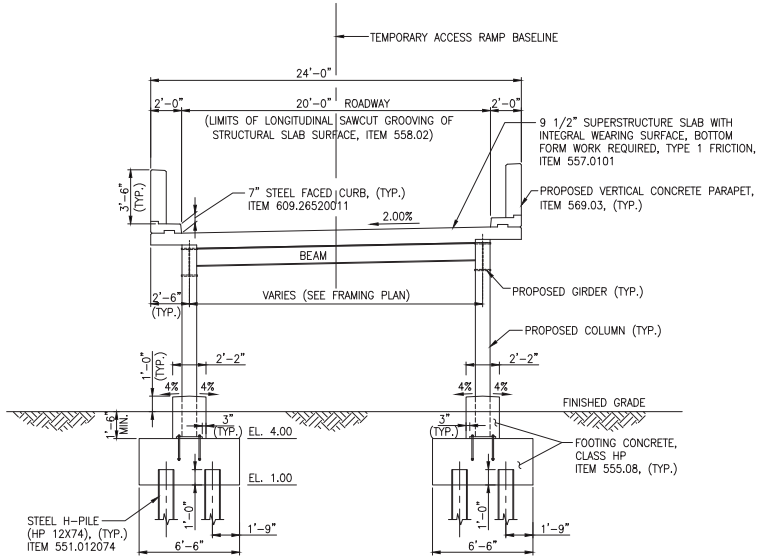

TYPICAL SECTION (LOOKING NORTH)
TEMPORARY ACCESS ROAD STA 2+96.33 TO 3+96.46
SECTION A–A
SCALE: 1/4"=1'-0"

REFERENCES:

1. FOR GENERAL PLAN, SEE DWG. NO. ST–1.
2. FOR COLUMN PILE PLAN AND DETAILS, SEE DWG. NO. ST–9 TO ST–11.
3. FOR FRAMING PLAN, SEE DWG. NO ST–26.

CONTRACT NO.	CD NO. M79

TEMPORARY ACCESS ROAD
RIVERSIDE BOULEVARD
WEST 59TH STREET TO WEST 61ST STREET
BOROUGH OF MANHATTAN

TYPICAL CROSS SECTIONS - I
SB TEMPORARY ACCESS ROAD

DWG. NO.	SCALE	DATE	SHEET
ST-2	AS SHOWN	09-15-2014	7 OF 68

The RBA Group — ENGINEERS • ARCHITECTS • PLANNERS
27 UNION SQUARE WEST
NEW YORK, NEW YORK 10003

0 1 2 3 4
ORIGINAL SIZE IN INCHES

PREPARED BY	THE RBA GROUP		
IN CHARGE	LR	DRAFTER	RJF
DESIGNER	WS	CHECKER	WS

RBA - RIVERSIDE BOULEVARD - TEMPORARY ACCESS ROAD
FILE: TAR_SEC

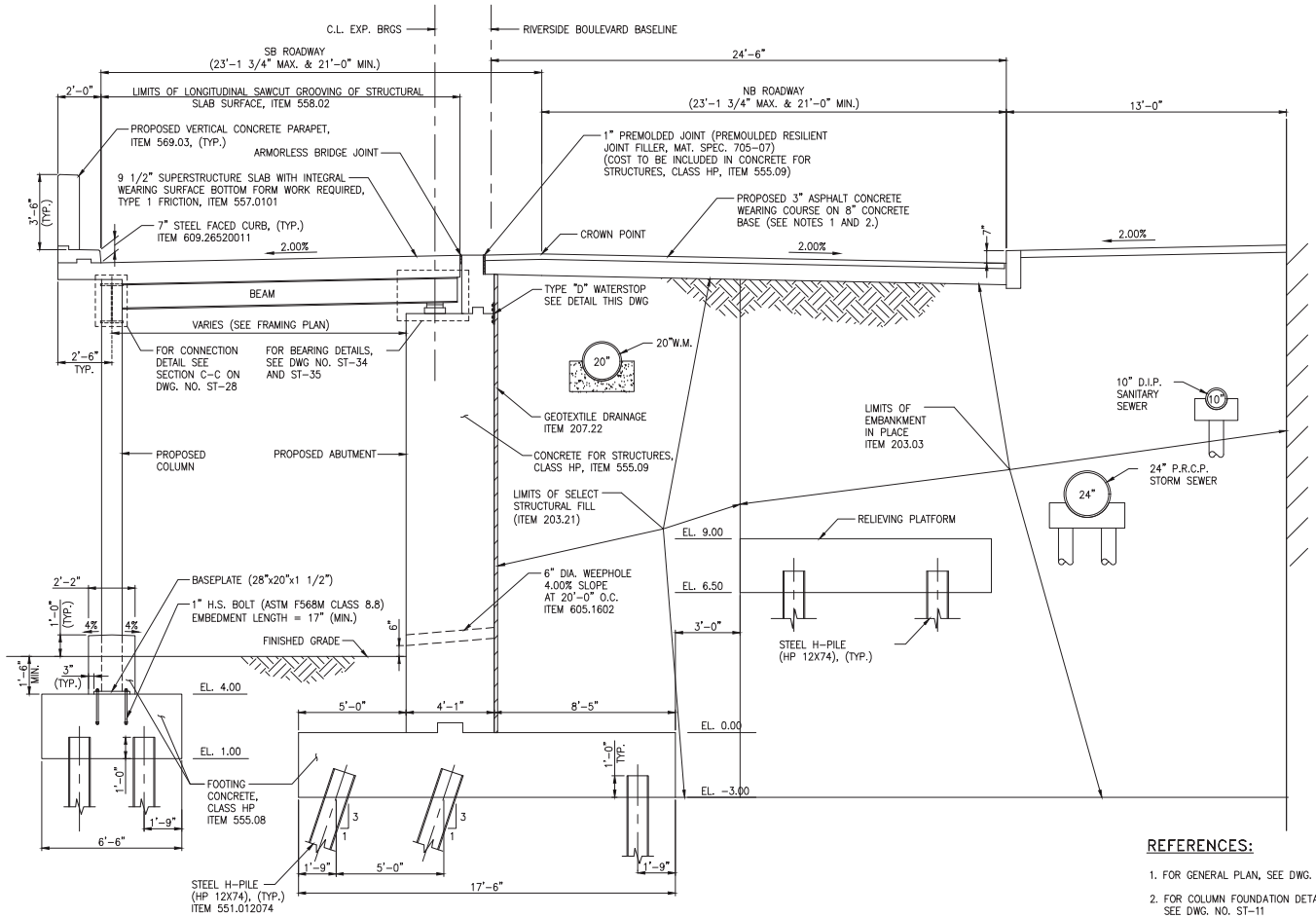

TYPICAL SECTION (LOOKING NORTH)
SB RAMP RIVERSIDE BLVD. STA 3+96.54 TO RIVERSIDE BLVD. STA 14+63.91
SECTION B-B
SCALE: 3/8"=1'-0"

NOTES:

1. CONCRETE BASE FOR PAVEMENT TO BE TYPE C PCC CONCRETE (ITEM 503.1010).
2. TYPE OF ASPHALT MIX TO BE APPLIED ON THE 3" ASPHALT CONCRETE WEARING SURFACE:

   TOP COURSE: 1.5" THICK
   12.5 F1 TOP COURSE HMA, 70 SERIES
   COMPACTION (ITEM 402.12102)
   PLANT PRODUCTION QUALITY ADJUSTMENT (ITEM 402.127112)

   BASE COURSE: 1.5" THICK
   25 F9 BINDER COURSE HMA, 70 SERIES
   COMPACTION (ITEM 402.257902)
   PLANT PRODUCTION QUALITY ADJUSTMENT (ITEM 402.257912)

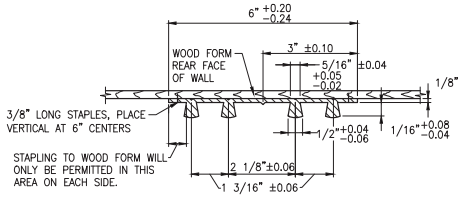

TYPE "D" WATERSTOP DETAIL
N.T.S.

REFERENCES:

1. FOR GENERAL PLAN, SEE DWG. NO. ST-1
2. FOR COLUMN FOUNDATION DETAILS, SEE DWG. NO. ST-11
3. FOR ABUTMENT SECTION DETAILS, SEE DWG. NO ST-14
4. FOR STEEL FACED CURB DETAIL, SEE DWG. NO. ST-38
5. FOR PARAPET ARCHITECTURAL TREATMENT DETAIL, SEE DWG. NO. ST-38
6. FOR ARMORLESS BRIDGE JOINT DETAIL, SEE DWG. NO. ST-41
7. FOR FRAMING PLAN, SEE DWG. NO. ST-26

RBA - RIVERSIDE BOULEVARD - TEMPORARY ACCESS ROAD
FILE: TAR_SEC

The RBA Group — ENGINEERS • ARCHITECTS • PLANNERS
27 UNION SQUARE WEST
NEW YORK, NEW YORK 10003

0 1 2 3 4
ORIGINAL SIZE IN INCHES

PREPARED BY	THE RBA GROUP		
IN CHARGE	LR	DRAFTER	RJF
DESIGNER	WS	CHECKER	WS

CONTRACT NO.	CD NO. M79

TEMPORARY ACCESS ROAD
RIVERSIDE BOULEVARD
WEST 59TH STREET TO WEST 61ST STREET
BOROUGH OF MANHATTAN

TYPICAL CROSS SECTIONS - II
NB RIVERSIDE BOULEVARD

DWG. NO.	SCALE	DATE	SHEET
ST-3	AS SHOWN	09-15-2014	8 OF 68

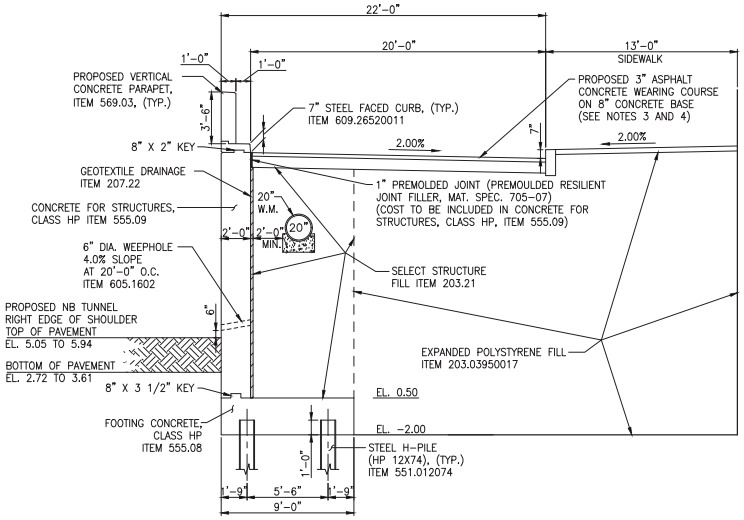

STA. 9+99.39 – 11+00 TYPICAL
SECTION (LOOKING NORTH)
SECTION C–C
SCALE 1/4"=1'-0"

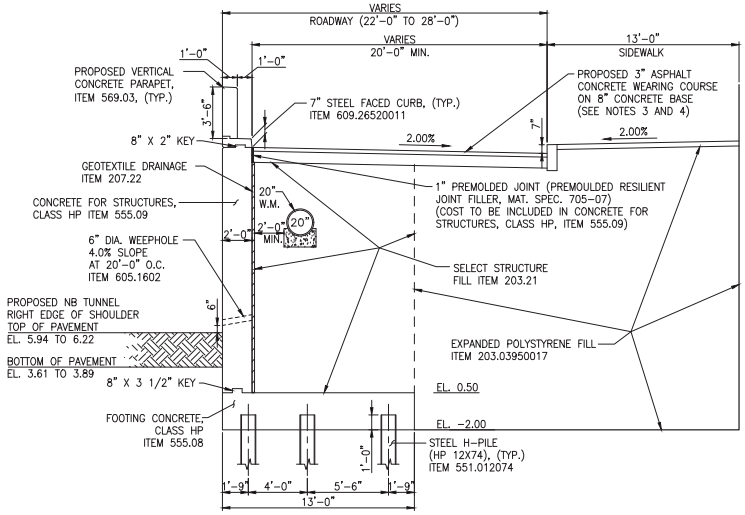

STA. 11+00 – 12+67.22 TYPICAL
SECTION (LOOKING NORTH)
SECTION D–D
SCALE 1/4"=1'-0"

NOTES:

1. THE CONTRACTOR IS RESPONSIBLE FOR DESIGN AND LAYOUT OF EPS BLOCK IN ACCORDANCE WITH NYSDOT DESIGN AND CONSTRUCTION GUIDELINES. A MINIMUM 4-FT COVER SHALL BE PROVIDED BETWEEN THE EPS BLOCKS AND RIDING SURFACES. A PROTECTIVE CAP COMPRISING A REINFORCED 4-INCH CONCRETE SHALL BE USED. THE MATERIAL USED SHALL SATISFY THE NYSDOT STRENGTH REQUIREMENT FOR AASHTO HS-25 LIVE LOADING.
2. SHOP DRAWINGS SHALL BE SUBMITTED TO THE ENGINEER FOR REVIEW AND APPROVAL.
3. CONCRETE BASE FOR PAYMENT TO BE TYPE C PCC CONCRETE (ITEM 503.1010).
4. TYPE OF ASPHALT MIX TO BE APPLIED ON THE 3" ASPHALT CONCRETE WEARING SURFACE:

   TOP COURSE: 1.5" THICK
   12.5 F1 TOP COURSE HMA, 70 SERIES COMPACTION (ITEM 402.12102)
   PLANT PRODUCTION QUALITY ADJUSTMENT (ITEM 402.127112)

   BASE COURSE: 1.5" THICK
   25 F9 BINDER COURSE HMA, 70 SERIES COMPACTION (ITEM 402.257902)
   PLANT PRODUCTION QUALITY ADJUSTMENT (ITEM 402.257912

REFERENCES:

1. FOR GENERAL PLAN, SEE DWG. NO. ST-1.
2. FOR RETAINING WALL SECTION DETAILS, SEE DWG. NO. ST-22

CONTRACT NO.	CD NO. M79

TEMPORARY ACCESS ROAD
RIVERSIDE BOULEVARD
WEST 59TH STREET TO WEST 61ST STREET
BOROUGH OF MANHATTAN

TYPICAL CROSS SECTIONS - III
NB RIVERSIDE BOULEVARD

DWG. NO.	SCALE	DATE	SHEET
ST-4	AS SHOWN	09-15-2014	9 OF 68

The RBA Group — ENGINEERS • ARCHITECTS • PLANNERS
27 UNION SQUARE WEST
NEW YORK, NEW YORK 10003

0 1 2 3 4
ORIGINAL SIZE IN INCHES

PREPARED BY	THE RBA GROUP		
IN CHARGE	LR	DRAFTER	RJF
DESIGNER	WS	CHECKER	WS

RBA - RIVERSIDE BOULEVARD - TEMPORARY ACCESS ROAD
FILE: TAR_SEC

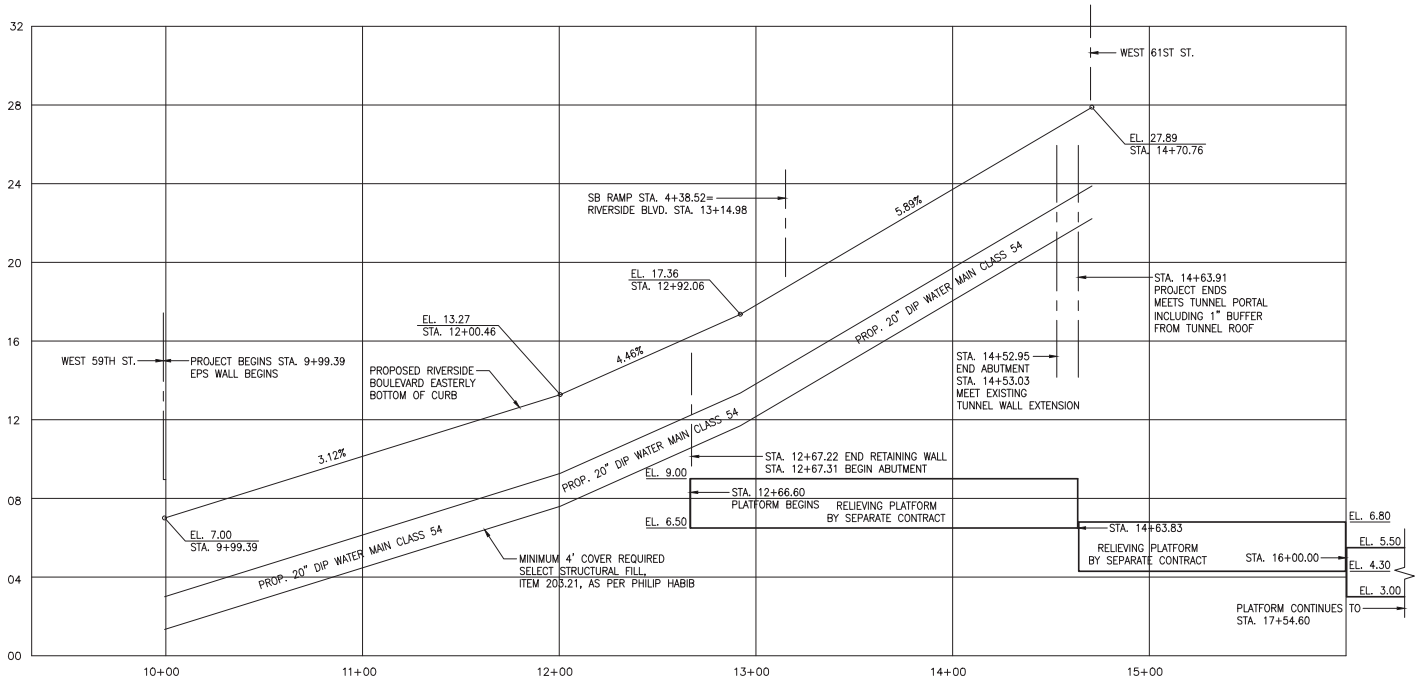

RIVERSIDE BOULEVARD
NORTHBOUND PROFILE

HORIZONTAL SCALE: 1" = 30'
VERTICAL SCALE: 1" = 3'

CONTRACT NO.	CD NO. M79

TEMPORARY ACCESS ROAD
RIVERSIDE BOULEVARD
WEST 59TH STREET TO WEST 61ST STREET
BOROUGH OF MANHATTAN

NB RIVERSIDE BOULEVARD
PROFILE

DWG. NO.	SCALE	DATE	SHEET
ST-5	AS SHOWN	09-15-2014	10 OF 68

The RBA Group
ENGINEERS • ARCHITECTS • PLANNERS
27 UNION SQUARE WEST
NEW YORK, NEW YORK 10003

0 1 2 3 4
ORIGINAL SIZE IN INCHES

PREPARED BY THE RBA GROUP
IN CHARGE LR DRAFTER RJF
DESIGNER WS CHECKER WS

RBA - RIVERSIDE BOULEVARD - TEMPORARY ACCESS ROAD
FILE: TAR_PRO(NB)

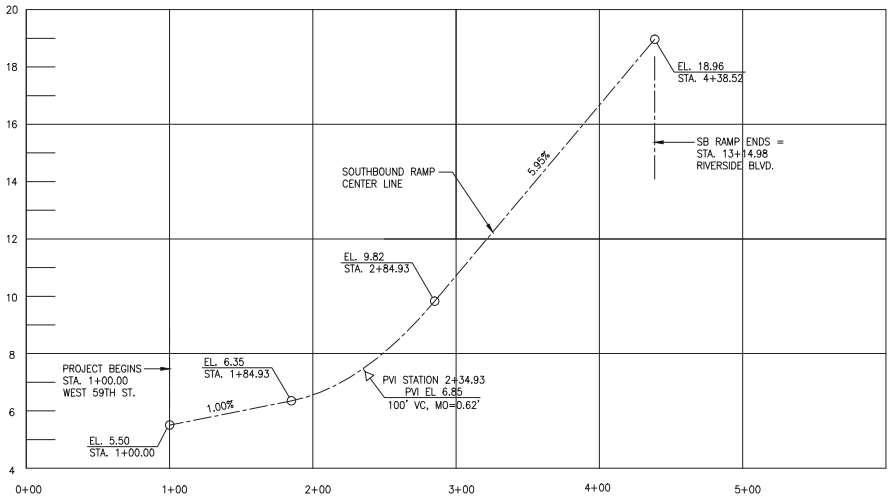

TEMPORARY ACCESS RAMP
SOUTHBOUND PROFILE

HORIZONTAL SCALE: 1" = 40'
VERTICAL SCALE: 1" = 2'

RBA - RIVERSIDE BOULEVARD - TEMPORARY ACCESS ROAD
FILE: TAR_PRO(SB)

The RBA Group ENGINEERS • ARCHITECTS • PLANNERS
27 UNION SQUARE WEST
NEW YORK, NEW YORK 10003

0 1 2 3 4
ORIGINAL SIZE IN INCHES

PREPARED BY THE RBA GROUP
IN CHARGE LR DRAFTER RJF
DESIGNER WS CHECKER WS

CONTRACT NO. | CD NO. M79

TEMPORARY ACCESS ROAD
RIVERSIDE BOULEVARD
WEST 59TH STREET TO WEST 61ST STREET
BOROUGH OF MANHATTAN

SB TEMPORARY ACCESS ROAD
PROFILE

DWG. NO.	SCALE	DATE	SHEET
ST-6	AS SHOWN	09-15-2014	11 OF 68

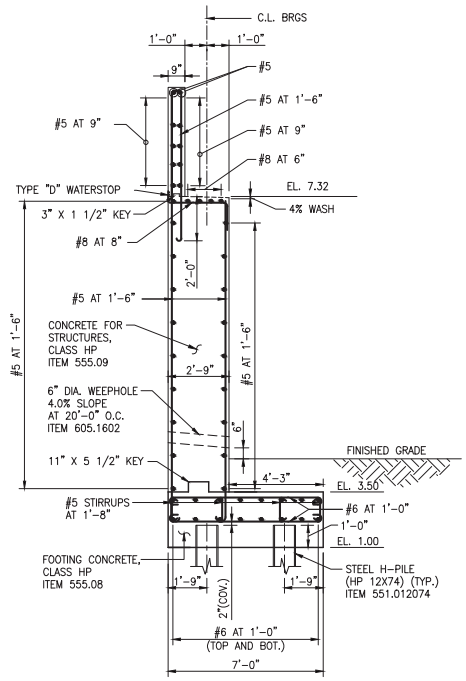

SECTION A–A
SCALE 3/8"=1'-0"

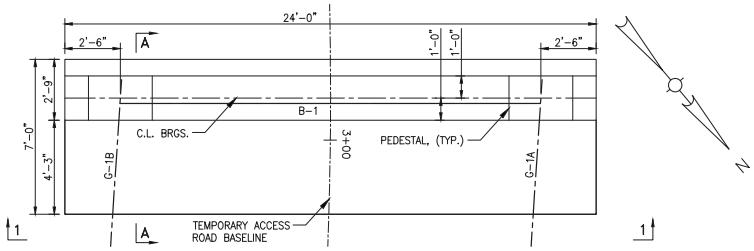

PLAN
SCALE 3/8"=1'-0"

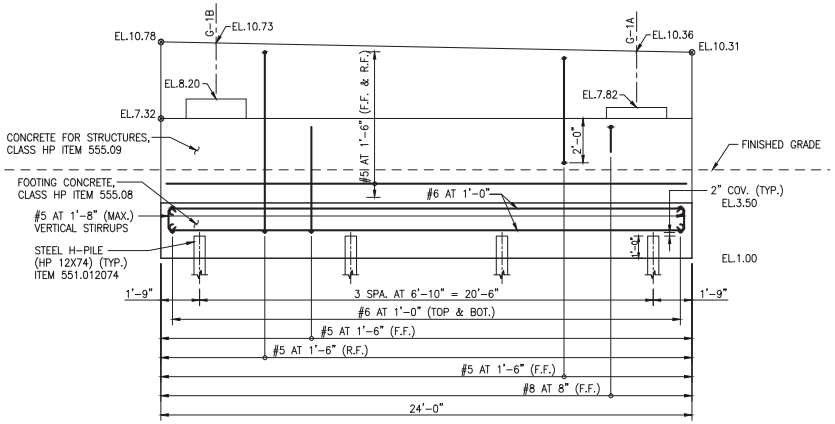

ELEVATION 1–1 (LOOKING SOUTH)
SCALE 3/8"=1'-0"

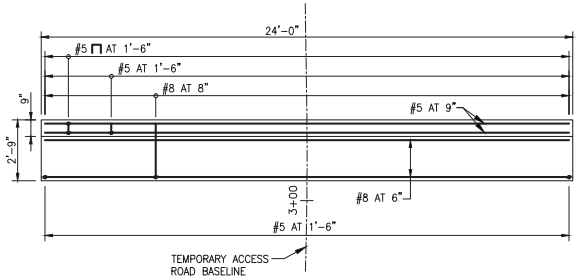

ABUTMENT BACKWALL REINFORCEMENT PLAN
SCALE 3/8"=1'-0"

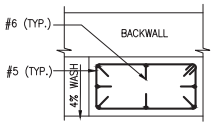

PLAN

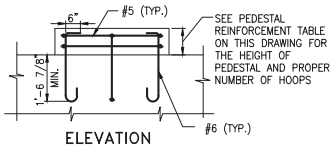

ELEVATION

PEDESTAL DETAILS
SCALE 1/2"=1'-0"

PEDESTAL REINFORCEMENT TABLE	
PEDESTAL HEIGHT	NUMBER OF HOOPS
6" TO 8"	1
8" TO 11"	2
11" TO 14"	3
14" TO 17"	4
17" TO 20"	5

REFERENCES:

1. FOR GENERAL PLAN, SEE DWG. NO. ST–1.
2. FOR BEARING DETAILS, SEE DWG. NO. ST–34.
3. FOR FOOTING REINFORCEMENT PLAN AND PILE LAYOUT, SEE DWG NO. ST–8.
4. FOR WATERSTOP DETAIL SEE DWG. NO. ST–3

NOTES:

1. TOP OF BACKWALL ELEVATIONS APPLY AT FRONT FACE OF THE BACKWALL. BRIDGE SEAT ELEVATIONS APPLY AT C.L. OF BEARINGS.
2. ALL REINFORCING BARS SHALL BE "EPOXY COATED BAR REINFORCEMENT FOR CONCRETE STRUCTURES", ITEM 556.0202.
3. PROVIDE ANTI–GRAFFITI PROTECTIVE COATING TO ALL EXPOSED SURFACE OF ABUTMENT AND BACKWALL ETC. ITEM 559.90010011.
4. VERTICAL STIRRUPS USING #5 BARS WITH ALTERNATED 135° HOOKS AT ONE END AND 90° HOOKS AT THE OTHER, SHALL BE USED IN ALL FOOTINGS TO CONNECT THE TOP AND BOTTOM REINFORCEMENT MATS.

The RBA Group — ENGINEERS • ARCHITECTS • PLANNERS
27 UNION SQUARE WEST
NEW YORK, NEW YORK 10003

0 1 2 3 4
ORIGINAL SIZE IN INCHES

PREPARED BY	THE RBA GROUP		
IN CHARGE	LR	DRAFTER	RJF
DESIGNER	WS	CHECKER	WS

CONTRACT NO.	CD NO. M79

TEMPORARY ACCESS ROAD
RIVERSIDE BOULEVARD
WEST 59TH STREET TO WEST 61ST STREET
BOROUGH OF MANHATTAN

ABUTMENT ON
TEMPORARY ACCESS ROAD
PLAN, ELEVATION AND SECTION DETAILS

DWG. NO.	SCALE	DATE	SHEET
ST-7	AS SHOWN	09-15-2014	12 OF 68

RBA - RIVERSIDE BOULEVARD - TEMPORARY ACCESS ROAD
FILE: TAR_ABUT_TAR

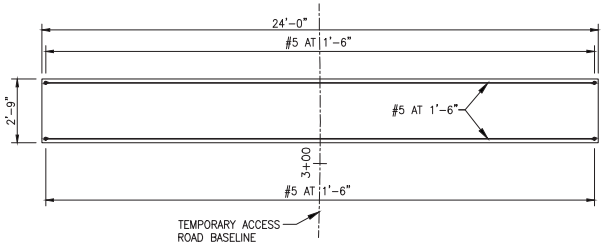

ABUTMENT STEM REINFORCEMENT PLAN

SCALE 3/8"=1'-0"

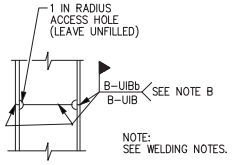

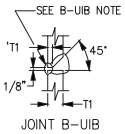

JOINT B-UIB

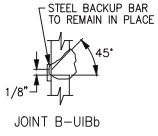

JOINT B-UIBb

NOTES:

A "WELDING PROCEDURE SPECIFICATION" (WPS) APPROVED BY THE D.C.E.S. IS REQUIRED.

ALL WELDING SHALL BE PERFORMED BY A CERTIFIED WELDER IN CONFORMANCE WITH REQUIREMENTS FOR WELDING SPECIFIED IN THE N.Y.S. STEEL CONSTRUCTION MANUAL.

A: SIZE TO BE INDICATED IN THE F.D.R.

B: EITHER JOINT MAY BE USED AT CONTRACTOR'S OPTION.

B-UIB: AIR CARBON ARC GOUGE TO SOUND WELD METAL PRIOR TO WELDING THE SECOND SIDE. THE GOUGE SHALL HAVE A 1/4" MINIMUM RADIUS AT THE ROOT WITH THE TOP SLOPED BACK AT 45° MINIMUM.

SPLICE FOR STEEL BEARING PILE

N.T.S.

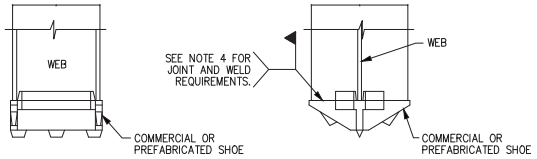

NOTES:

1. COMMERCIAL OR PREFABRICATED SHOES ARE SUBJECT TO THE APPROVAL OF THE DCES.
2. THE SHOE SHALL BE ATTACHED BY A NYSDOT CERTIFIED WELDER.
3. A "WELDING PROCEDURE SPECIFICATION" (WPS) APPROVED BY THE DCES IS REQUIRED.
4. THE SHOE WELD JOINT DESIGN SHALL BE DONE IN ACCORDANCE WITH THE MANUFACTURER'S RECOMMENDATION, AND AS SHOWN ON THE APPROVED WPS.
5. IF SHOES ARE WELDED AT A LOCATION OTHER THAN THE PROJECT SITE, ALL OF THE ABOVE PROVISIONS SHALL APPLY TO THE OFFSITE FABRICATOR. THE DCES SHALL BE NOTIFIED BY THE CONTRACTOR OF THE ACTUAL LOCATION WHERE THE WELDING WILL BE PERFORMED A MINIMUM OF 5 WORKING DAYS BEFORE WORK COMMENCES.
6. ALL WELDING SHALL BE PERFORMED BY A CERTIFIED WELDER IN CONFORMANCE WITH REQUIREMENTS FOR WELDING SPECIFIED IN THE N.Y.S. STEEL CONSTRUCTION MANUAL.

STEEL BEARING PILE SHOES

N.T.S.

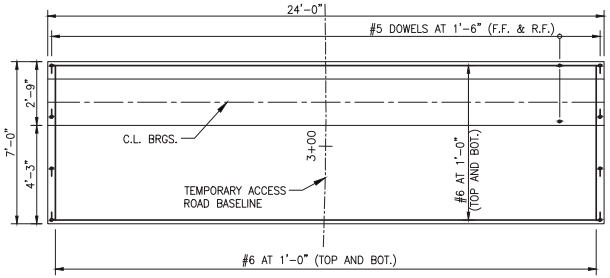

ABUTMENT FOOTING REINFORCEMENT PLAN

SCALE 3/8"=1'-0"

PILE TABLE							
LOCATION	NO. OF TEST PILES	NO. OF PILES	TOTAL NO. OF PILES	ESTIMATED TIP EL. (FT.)	ESTIMATED LENGTH OF TEST PILES (L.F.)	ESTIMATED LENGTH OF PILES (L.F.)	TOTAL LENGTH OF PILES INCLUDING TEST PILES (L.F.)
ABUTMENT ON TEMPORARY ACCESS ROAD	1	8	9	APPROX. -46.00	48.00	48.00	432.00

PILE TESTING NOTES:

1. FOR FOUNDATION NOTES SEE DRAWING NO. GN-2
2. HP 12X74 PILES OR APPROVED EQUIVALENT WITH A DRIVING TIP SHALL BE DRIVEN TO END BEARING ON BEDROCK. THE MAXIMUM ALLOWABLE CAPACITY IS 120 TONS PER PILE. PILES SHALL BE LOAD TESTED TO AN ULTIMATE CAPACITY OF 240 TONS (SAFETY FACTOR=2) USING BOTH STATIC AND DYNAMIC LOAD TESTS. TEST PILES LOCATIONS SEE ARE SHOWN HEREIN.
3. STATIC LOAD TESTING SHALL BE PERFORMED FOLLOWING REQUIREMENTS OF NYS DOT STATIC PILE LOAD TEST MANUAL, USING THE INCREMENTAL STATIC LOAD TEST PROCEDURE. DYNAMIC LOAD TESTS SHALL BE PERFORMED IN ACCORDANCE WITH ASTM D4945.
4. FOR BOTH VERTICAL AND BATTER PILES, USE THE FOLLOWING TOLERANCES:

   HORIZONTAL – ALL PILES SHALL BE DRIVEN WITH A HORIZONTAL VARIATION FROM THE PLAN AT CUT-OFF ELEVATIONS OF NOT MORE THAN THREE INCHES (3 INCHES). ANY PILE OUT OF TOLERANCE BY MORE THAN THE AMOUNT STATED ABOVE MAY BE REJECTED. IF REJECTED, IT SHALL BE REPLACED BY ANOTHER PILE OR PILES, AT LOCATIONS SPECIFIED BY THE ENGINEER AT THE CONTRACTOR'S EXPENSE.

   VERTICAL – IF THE AXIS OF ANY PILE IS INSTALLED OUT OF ALIGNMENT BY MORE THAN TWO PERCENT (2%). THE ENGINEER MUST BE NOTIFIED AND THE FOUNDATION SHALL BE ANALYZED AS NECESSARY TO ENSURE THAT IT CAN RESIST THE LATERAL AND VERTICAL FORCES. MODIFICATION TO THE FOUNDATION DESIGN SHALL BE APPROVED BY THE RESIDENT ENGINEER. THE COST OF THE ANALYSIS AND FOUNDATION DESIGN SHALL BE PAID BY THE CONTRACTOR.
5. THE CONTRACTOR MAY SELECT AN ALTERNATIVE PILES TYPE IN ORDER TO ACHIEVE THE DESIGN CAPACITY.

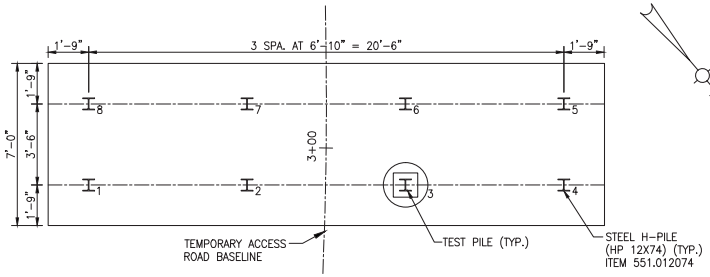

ABUTMENT PILE LAYOUT

SCALE 3/8"=1'-0"

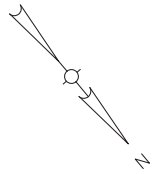

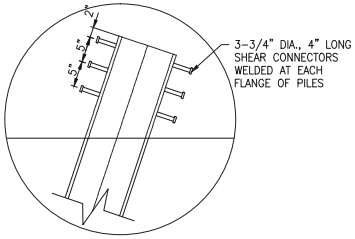

DETAIL "C"

TYPICAL DETAIL OF CONNECTION BETWEEN PILE AND PILE CAP

SCALE 1"=1'-0"

LEGEND:

- STEEL H-PILE (HP 12X74), ITEM 551.012074
- TEST PILE FOR DYNAMIC PILE LOAD TEST
- TEST PILE FOR STATIC PILE LOAD TEST

REFERENCES:

1. FOR GENERAL PLAN, SEE DWG. NO. ST-1.
2. FOR BORING LOGS, SEE DWG NOS. B-1 TO B-17.

CONTRACT NO.	CD NO. M79

TEMPORARY ACCESS ROAD
RIVERSIDE BOULEVARD
WEST 59TH STREET TO WEST 61ST STREET
BOROUGH OF MANHATTAN

ABUTMENT ON TEMPORARY ACCESS ROAD BACKWALL, STEM AND FOOTING REINFORCEMENT PLANS AND PILE LAYOUT

DWG. NO.	SCALE	DATE	SHEET
ST-8	AS SHOWN	09-15-2014	13 OF 68

The RBA Group — ENGINEERS • ARCHITECTS • PLANNERS
27 UNION SQUARE WEST
NEW YORK, NEW YORK 10003

0 1 2 3 4
ORIGINAL SIZE IN INCHES

PREPARED BY	THE RBA GROUP		
IN CHARGE	LR	DRAFTER	RJF
DESIGNER	WS	CHECKER	WS

RBA - RIVERSIDE BOULEVARD - TEMPORARY ACCESS ROAD
FILE: TAR_ABUT_TAR

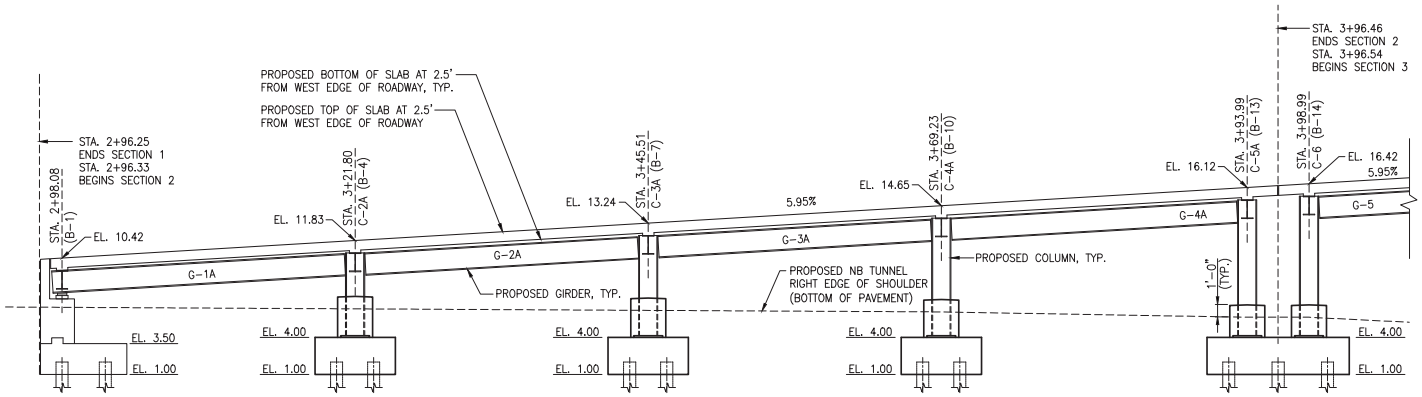

TEMPORARY ACCESS ROAD ELEVATION – SOUTHBOUND WEST SIDE
(LOOKING WEST)

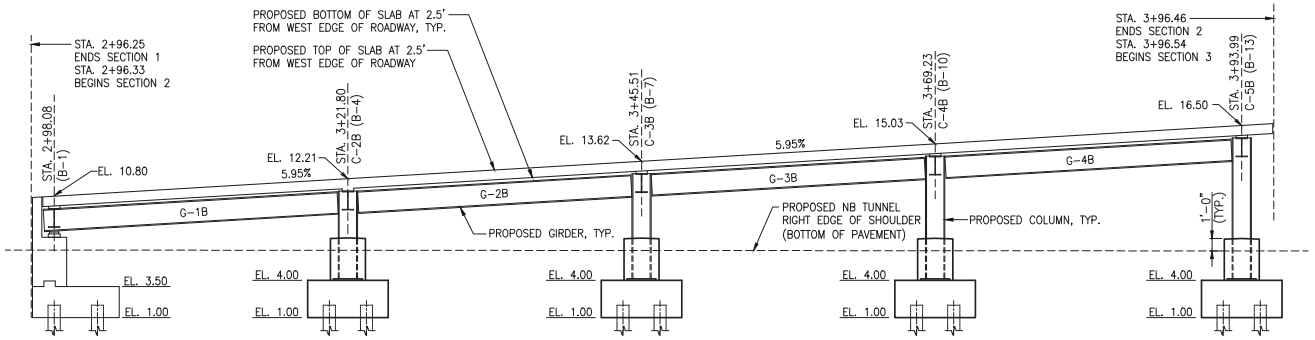

TEMPORARY ACCESS ROAD ELEVATION – SOUTHBOUND EAST SIDE
(LOOKING WEST)

REFERENCES:

1. FOR GENERAL PLAN, SEE DWG. NO. ST-1.
2. FOR COLUMN FOOTING DETAILS, SEE DWG. NO. ST-11.

CONTRACT NO.	CD NO. M79

TEMPORARY ACCESS ROAD
RIVERSIDE BOULEVARD
WEST 59TH STREET TO WEST 61ST STREET
BOROUGH OF MANHATTAN

COLUMNS ON
SB TEMPORARY ACCESS ROAD
ELEVATION I

DWG. NO.	SCALE	DATE	SHEET
ST-9	1" = 20'	09-15-2014	14 OF 68

The RBA Group — ENGINEERS • ARCHITECTS • PLANNERS
27 UNION SQUARE WEST
NEW YORK, NEW YORK 10003

0 1 2 3 4
ORIGINAL SIZE IN INCHES

PREPARED BY	THE RBA GROUP		
IN CHARGE	LR	DRAFTER	RJF
DESIGNER	WS	CHECKER	WS

RBA - RIVERSIDE BOULEVARD - TEMPORARY ACCESS ROAD
FILE: TAR_COL

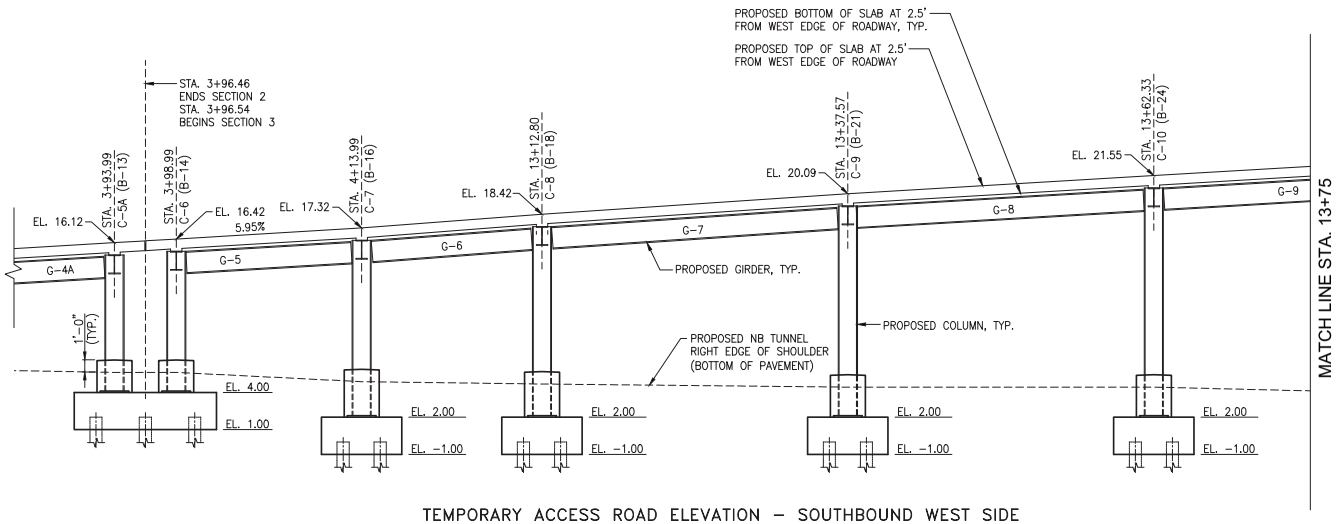

TEMPORARY ACCESS ROAD ELEVATION – SOUTHBOUND WEST SIDE
(LOOKING WEST)

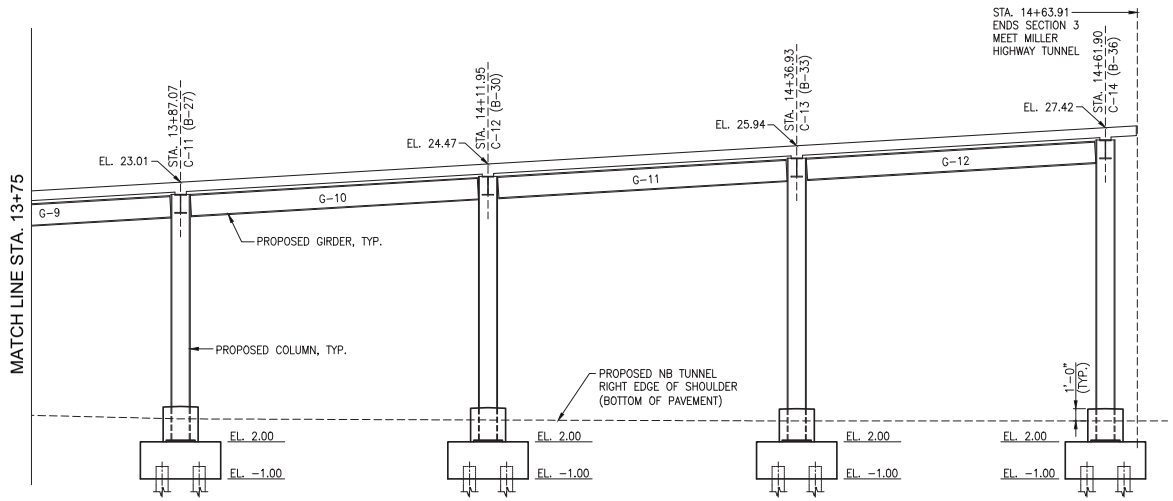

TEMPORARY ACCESS ROAD ELEVATION – SOUTHBOUND WEST SIDE
(LOOKING WEST)

REFERENCES:

1. FOR GENERAL PLAN, SEE DWG. NO. ST-1.
2. FOR COLUMN FOOTING DETAILS, SEE DWG. NO. ST-11.

CONTRACT NO.	CD NO. M79

TEMPORARY ACCESS ROAD
RIVERSIDE BOULEVARD
WEST 59TH STREET TO WEST 61ST STREET
BOROUGH OF MANHATTAN

COLUMNS ON
SB TEMPORARY ACCESS ROAD
ELEVATION II

DWG. NO.	SCALE	DATE	SHEET
ST-10	1" = 20'	09-15-2014	15 OF 68

The RBA Group — ENGINEERS • ARCHITECTS • PLANNERS
27 UNION SQUARE WEST
NEW YORK, NEW YORK 10003

0 1 2 3 4
ORIGINAL SIZE IN INCHES

PREPARED BY	THE RBA GROUP		
IN CHARGE	LR	DRAFTER	RJF
DESIGNER	WS	CHECKER	WS

RBA - RIVERSIDE BOULEVARD - TEMPORARY ACCESS ROAD
FILE: TAR_COL

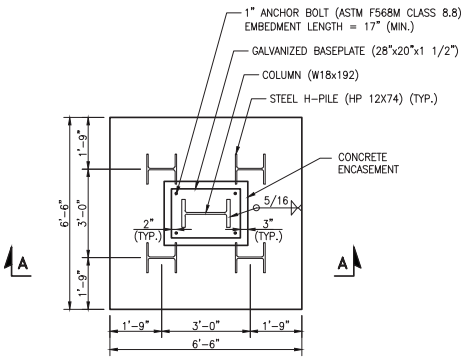

PLAN

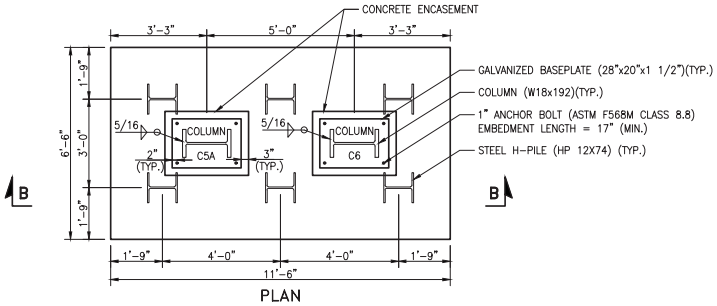

PLAN

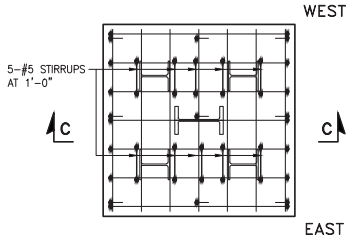

PLAN

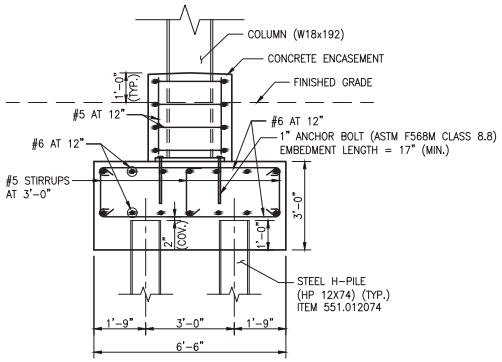

SECTION A–A

TYPICAL COLUMN FOOTING

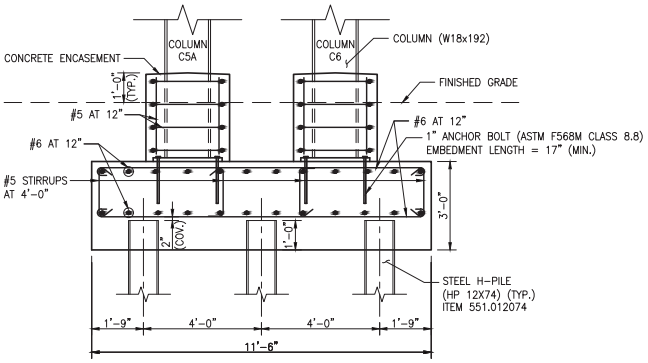

SECTION B–B

COLUMN FOOTING
FOR COLUMNS C5A AND C6

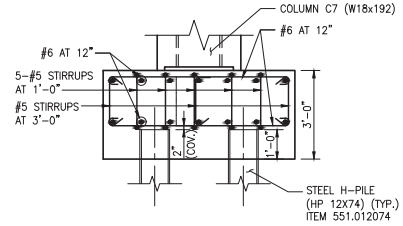

SECTION C–C

COLUMN FOOTING
FOR COLUMN C7

NOTES:

1. VERTICAL STIRRUPS USING #5 BARS WITH ALTERNATED 135° HOOKS AT ONE END AND 90° HOOKS AT THE OTHER, SHALL BE USED IN ALL FOOTINGS TO CONNECT THE TOP AND BOTTOM REINFORCEMENT MATS.

REFERENCES:

1. FOR COLUMN ELEVATION PLANS, SEE DWG. NOS. ST–9 AND ST–10.
2. FOR FRAMING PLAN, SEE DWG. NO. ST–26.

PILE TABLE

LOCATION	NO. OF TEST PILES	NO. OF PILES	TOTAL NO. OF PILES	ESTIMATED TIP EL. (FT.)	ESTIMATED LENGTH OF TEST PILES (L.F.)	ESTIMATED LENGTH OF PILES (L.F.)	TOTAL LENGTH OF PILES INCLUDING TEST PILES (L.F.)
COLUMNS ON SB TEMPORARY ACCESS ROAD	2	66	68	APPROX. −45.00	47.00	47.00	3196.00

NOTE: SEE DWG. NO. ST–8 FOR "SPLICE FOR STEEL BEARING PILE" DETAIL AND "STEEL BEARING PILE SHOES" DETAIL.

The RBA Group
ENGINEERS • ARCHITECTS • PLANNERS
27 UNION SQUARE WEST
NEW YORK, NEW YORK 10003

0 1 2 3 4
ORIGINAL SIZE IN INCHES

PREPARED BY THE RBA GROUP
IN CHARGE LR DRAFTER RJF
DESIGNER WS CHECKER WS

CONTRACT NO. | CD NO. M79

TEMPORARY ACCESS ROAD
RIVERSIDE BOULEVARD
WEST 59TH STREET TO WEST 61ST STREET
BOROUGH OF MANHATTAN

COLUMNS ON
SB TEMPORARY ACCESS ROAD
FOOTING DETAIL

DWG. NO.	SCALE	DATE	SHEET
ST-11	1/2" = 1'-0"	09-15-2014	16 OF 68

RBA - RIVERSIDE BOULEVARD - TEMPORARY ACCESS ROAD
FILE: TAR_COL

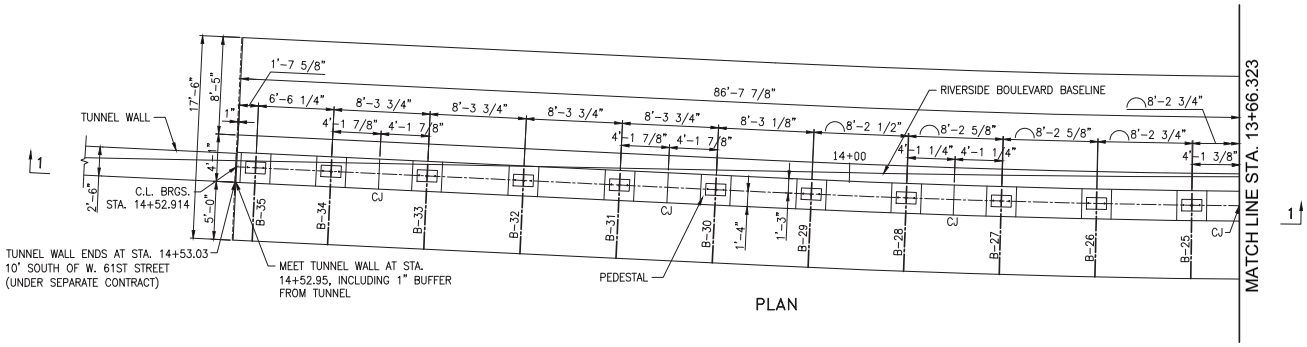

PLAN

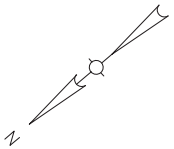

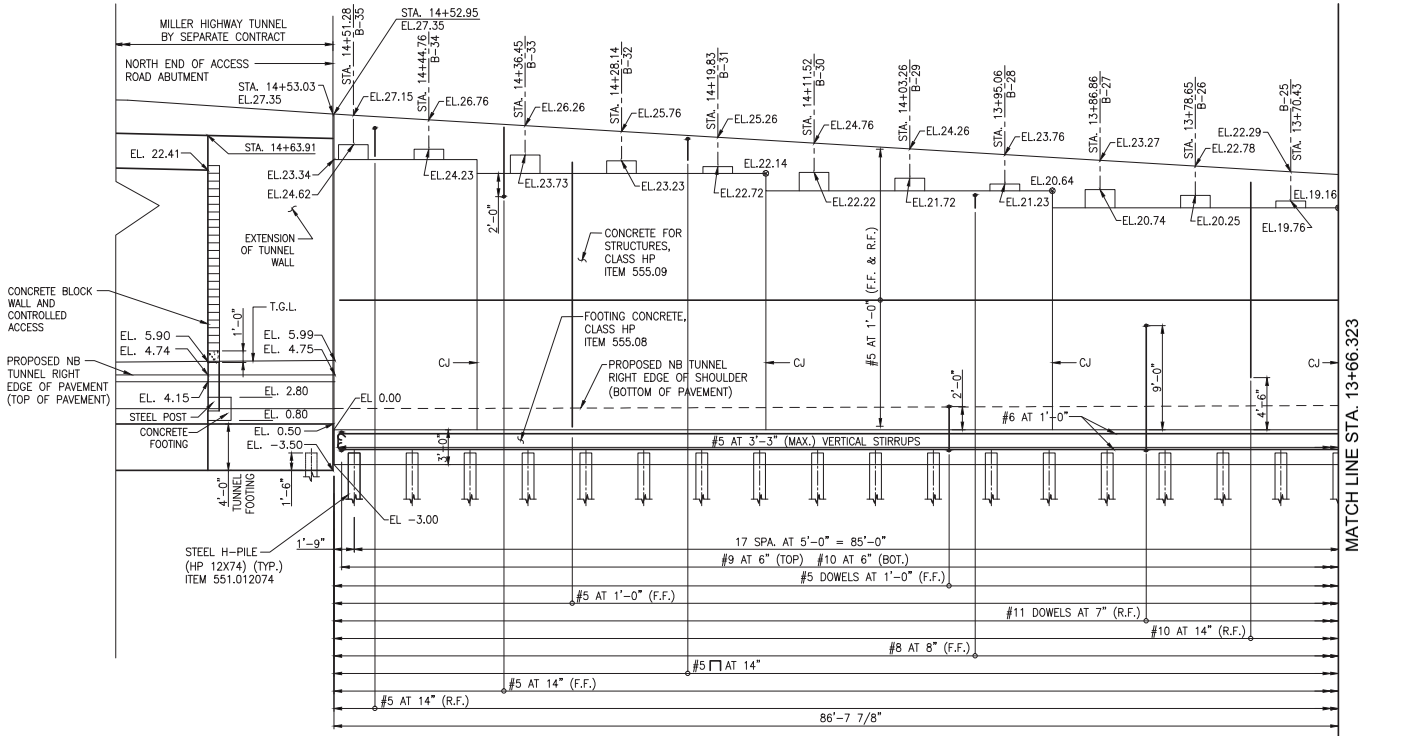

ELEVATION 1-1 (LOOKING EAST)

REFERENCES:

1. FOR GENERAL PLAN, SEE DWG. NO. ST-1.

CONTRACT NO.	CD NO. M79

TEMPORARY ACCESS ROAD
RIVERSIDE BOULEVARD
WEST 59TH STREET TO WEST 61ST STREET
BOROUGH OF MANHATTAN

ABUTMENT ON RIVERSIDE BOULEVARD PLAN AND ELEVATION I

DWG. NO.	SCALE	DATE	SHEET
ST-12	3/16" = 1'-0"	09-15-2014	17 OF 68

The RBA Group — Engineers • Architects • Planners
27 UNION SQUARE WEST
NEW YORK, NEW YORK 10003

ORIGINAL SIZE IN INCHES

PREPARED BY	THE RBA GROUP		
IN CHARGE	LR	DRAFTER	RJF
DESIGNER	WS	CHECKER	WS

RBA - RIVERSIDE BOULEVARD - TEMPORARY ACCESS ROAD
FILE: TAR_ABUT_RIV

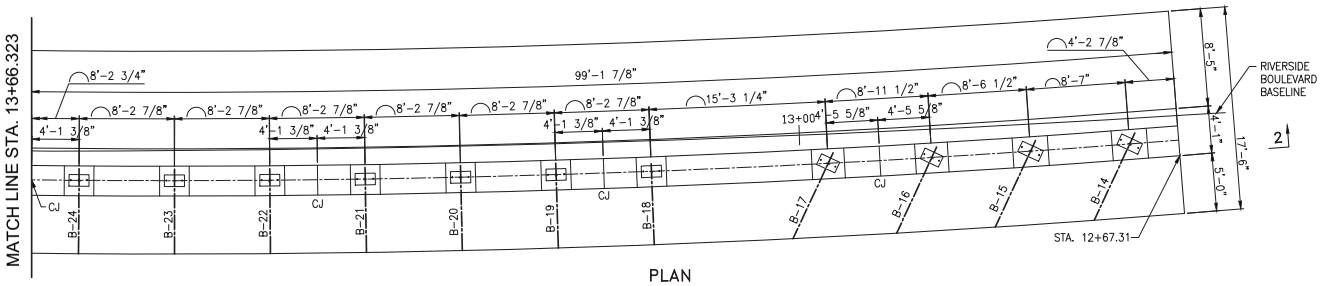

PLAN

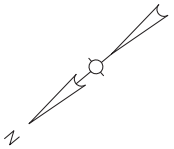

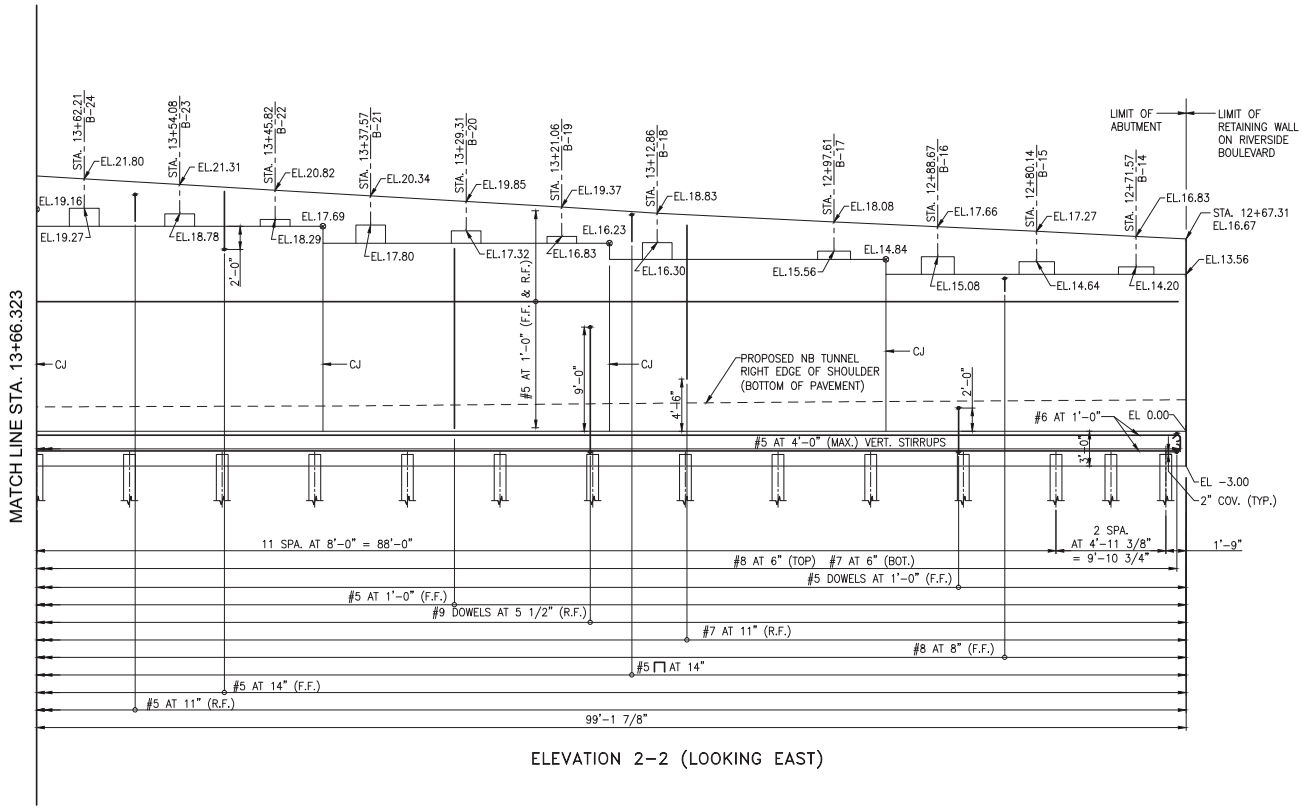

ELEVATION 2-2 (LOOKING EAST)

REFERENCES:

1. FOR GENERAL PLAN, SEE DWG. NO. ST-1.
2. FOR RETAINING WALL ON RIVERSIDE BOULEVARD PLANS, SEE DWG. NOS. ST-19 TO ST-25.

The RBA Group — ENGINEERS • ARCHITECTS • PLANNERS
27 UNION SQUARE WEST
NEW YORK, NEW YORK 10003

0 1 2 3 4
ORIGINAL SIZE IN INCHES

PREPARED BY	THE RBA GROUP		
IN CHARGE	LR	DRAFTER	RJF
DESIGNER	WS	CHECKER	WS

CONTRACT NO.	CD NO. M79

TEMPORARY ACCESS ROAD
RIVERSIDE BOULEVARD
WEST 59TH STREET TO WEST 61ST STREET
BOROUGH OF MANHATTAN

ABUTMENT ON RIVERSIDE BOULEVARD PLAN AND ELEVATION II

DWG. NO.	SCALE	DATE	SHEET
ST-13	3/16" = 1'-0"	09-15-2014	18 OF 68

RBA - RIVERSIDE BOULEVARD - TEMPORARY ACCESS ROAD
FILE: TAR_ABUT_RIV

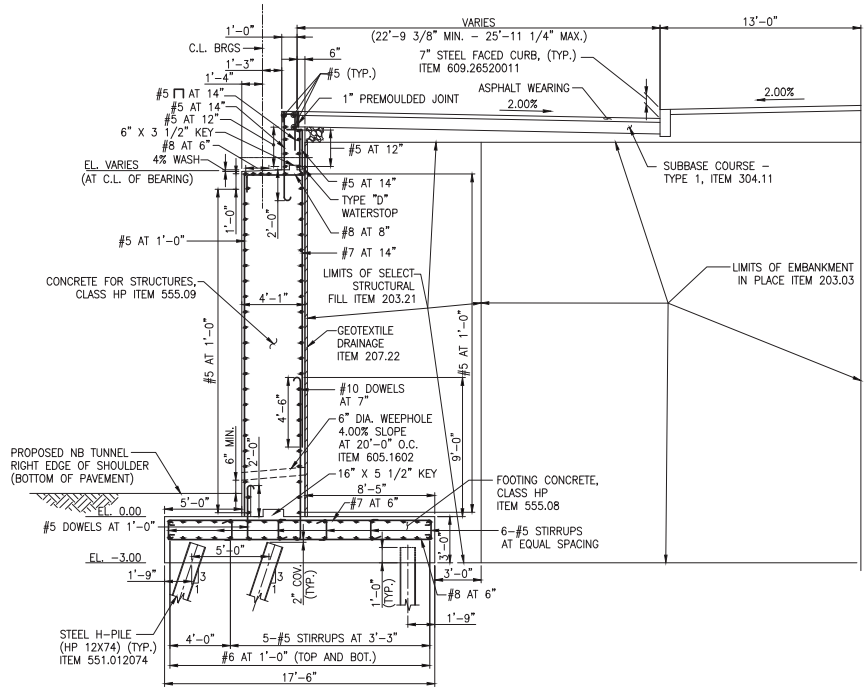

TYPICAL SECTION (LOOKING NORTH)
STA. 12+67.310 - STA.13+66.323
(AT C.L. BEARING)
SCALE 1/4"=1'-0"

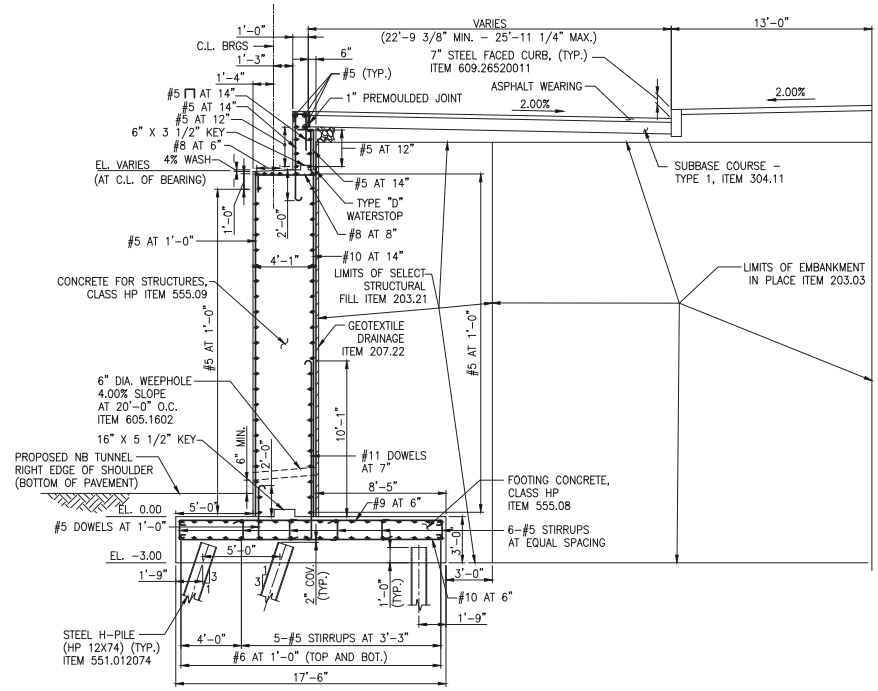

TYPICAL SECTION (LOOKING NORTH)
STA. 13+66.323 - STA. 14+52.950
(AT C.L. BEARING)
SCALE 1/4"=1'-0"

REFERENCES:

1. FOR BORING LOGS, SEE DWG. NOS. B-1 TO B-17.
2. FOR FOOTING REINFORCEMENT PLAN AND PILE LAYOUT, SEE DWG NO. ST-17 AND ST-18.
3. FOR UTILITIES AND PLATFORM LOCATIONS, SEE DWG. NO. ST-3

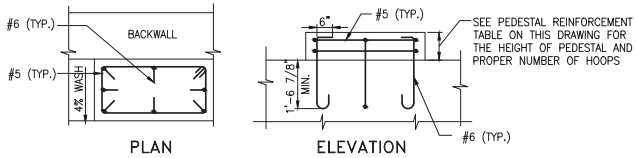

PEDESTAL DETAILS
SCALE 1/2"=1'-0"

PEDESTAL REINFORCEMENT TABLE	
PEDESTAL HEIGHT	NUMBER OF HOOPS
6" TO 8"	1
8" TO 11"	2
11" TO 14"	3
14" TO 17"	4
17" TO 20"	5

NOTES:

1. TOP OF BACKWALL ELEVATIONS APPLY AT FRONT FACE OF THE BACKWALL. BRIDGE SEAT ELEVATIONS APPLY AT C.L. OF BEARINGS.
2. ALL REINFORCING BARS SHALL BE "EPOXY COATED BAR REINFORCEMENT FOR CONCRETE STRUCTURES", ITEM 556.0202.
3. PROVIDE ANTI-GRAFFITI PROTECTIVE COATING TO ALL EXPOSED SURFACE OF ABUTMENT, ITEM 559.90010011.
4. ALL ELEVATIONS ARE IN FEET.
5. VERTICAL STIRRUPS USING #5 BARS WITH ALTERNATED 135° HOOKS AT ONE END AND 90° HOOKS AT THE OTHER, SHALL BE USED IN ALL FOOTINGS TO CONNECT THE TOP AND BOTTOM REINFORCEMENT MATS.
6. THE ABUTMENT STEM WALL (4'-1") FALLS INTO THE CATEGORY OF MASS PLACEMENT OF CONCRETE. THE MAXIMUM TEMPERATURE DIFFERENTIAL SHALL BE LIMITED TO 35 DEGREES F. THE TEMPERATURE DIFFERENTIAL BETWEEN THE INTERIOR AND EXTERIOR PORTIONS OF THE DESIGNATED MASS CONCRETE ELEMENTS DURING CURING WILL BE MAINTAINED TO BE LESS THAN OR EQUAL TO THIS MAXIMUM TEMPERATURE DIFFERENTIAL AND THE MAXIMUM ALLOWABLE CONCRETE TEMPERATURE AT THE CORE SHALL BE LIMITED TO 160 DEGREES F.

CONTRACT NO. | CD NO. M79

TEMPORARY ACCESS ROAD
RIVERSIDE BOULEVARD
WEST 59TH STREET TO WEST 61ST STREET
BOROUGH OF MANHATTAN

ABUTMENT ON RIVERSIDE BOULEVARD
SECTION DETAILS

DWG. NO.	SCALE	DATE	SHEET
ST-14	AS SHOWN	09-15-2014	19 OF 68

The RBA Group — ENGINEERS • ARCHITECTS • PLANNERS
27 UNION SQUARE WEST
NEW YORK, NEW YORK 10003

0 1 2 3 4
ORIGINAL SIZE IN INCHES

PREPARED BY THE RBA GROUP
IN CHARGE LR | DRAFTER RJF
DESIGNER WS | CHECKER WS

RBA - RIVERSIDE BOULEVARD - TEMPORARY ACCESS ROAD
FILE: TAR_ABUT_RIV

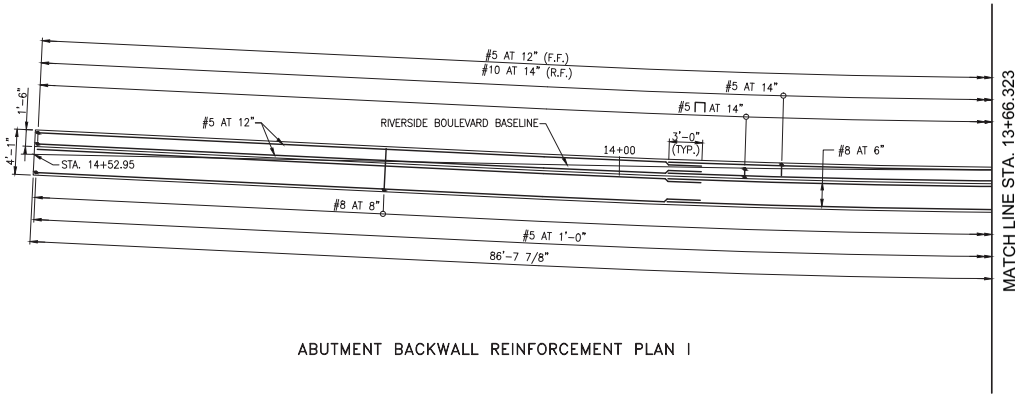

ABUTMENT BACKWALL REINFORCEMENT PLAN I

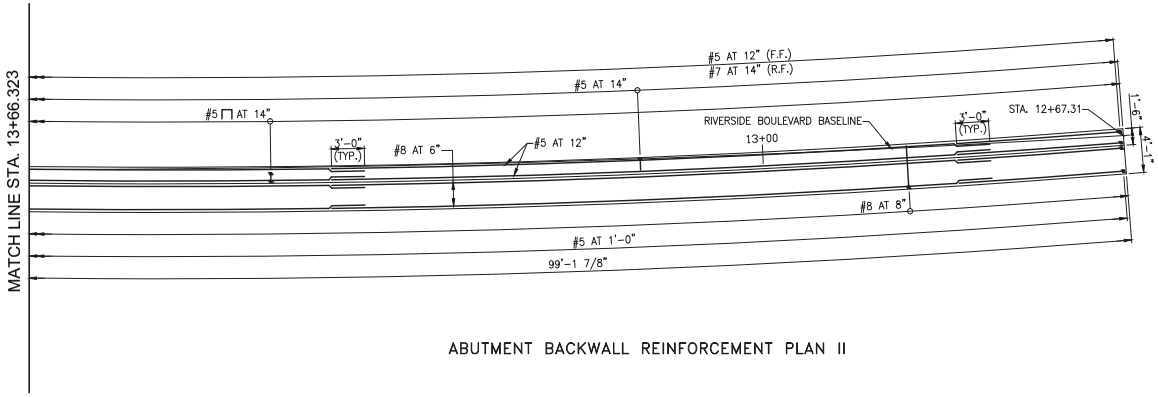

ABUTMENT BACKWALL REINFORCEMENT PLAN II

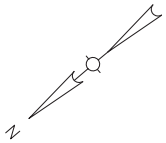

REFERENCES:

1. FOR ABUTMENT SECTION DETAILS, SEE DWG. NO. ST-14.

CONTRACT NO.	CD NO. M79

TEMPORARY ACCESS ROAD
RIVERSIDE BOULEVARD
WEST 59TH STREET TO WEST 61ST STREET
BOROUGH OF MANHATTAN

ABUTMENT ON RIVERSIDE BOULEVARD BACKWALL REINFORCEMENT PLAN

DWG. NO.	SCALE	DATE	SHEET
ST-15	3/16" = 1'-0"	09-15-2014	20 OF 68

The RBA Group — ENGINEERS • ARCHITECTS • PLANNERS
27 UNION SQUARE WEST
NEW YORK, NEW YORK 10003

0 1 2 3 4
ORIGINAL SIZE IN INCHES

PREPARED BY	THE RBA GROUP		
IN CHARGE	LR	DRAFTER	RJF
DESIGNER	WS	CHECKER	WS

RBA - RIVERSIDE BOULEVARD - TEMPORARY ACCESS ROAD
FILE: TAR_ABUT_RIV

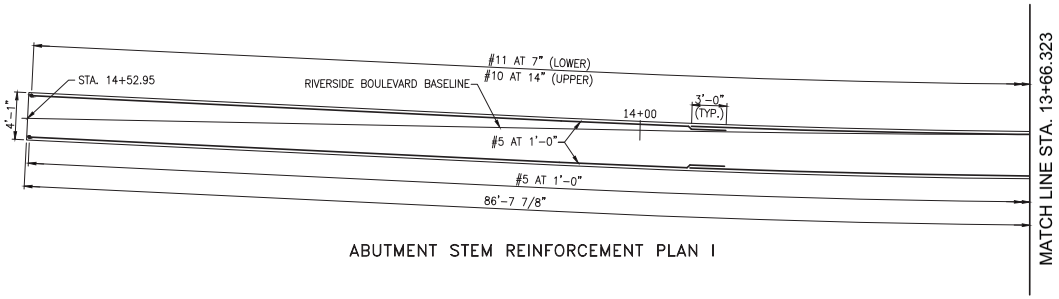

ABUTMENT STEM REINFORCEMENT PLAN I

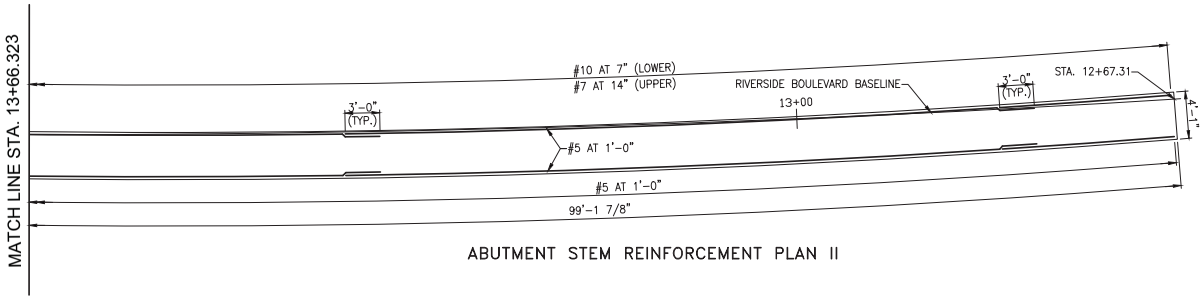

ABUTMENT STEM REINFORCEMENT PLAN II

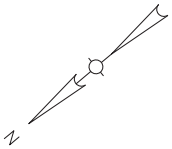

REFERENCES:

1. FOR ABUTMENT SECTION DETAILS, SEE DWG. NO. ST-14.

CONTRACT NO.	CD NO. M79

TEMPORARY ACCESS ROAD
RIVERSIDE BOULEVARD
WEST 59TH STREET TO WEST 61ST STREET
BOROUGH OF MANHATTAN

ABUTMENT ON RIVERSIDE BOULEVARD STEM REINFORCEMENT PLAN

DWG. NO.	SCALE	DATE	SHEET
ST-16	3/16" = 1'-0"	09-15-2014	21 OF 68

The RBA Group
ENGINEERS • ARCHITECTS • PLANNERS
27 UNION SQUARE WEST
NEW YORK, NEW YORK 10003

0 1 2 3 4
ORIGINAL SIZE IN INCHES

PREPARED BY	THE RBA GROUP		
IN CHARGE	LR	DRAFTER	RJF
DESIGNER	WS	CHECKER	WS

RBA - RIVERSIDE BOULEVARD - TEMPORARY ACCESS ROAD
FILE: TAR_ABUT_RIV

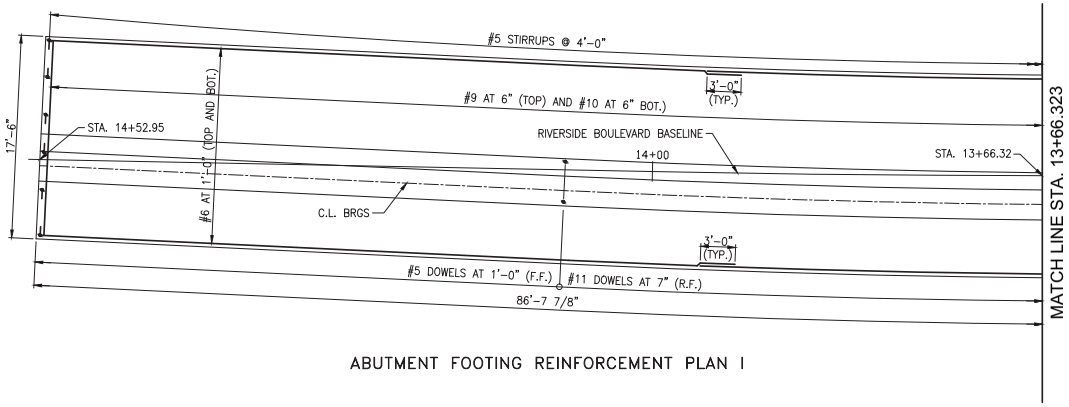

ABUTMENT FOOTING REINFORCEMENT PLAN I

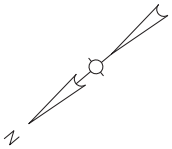

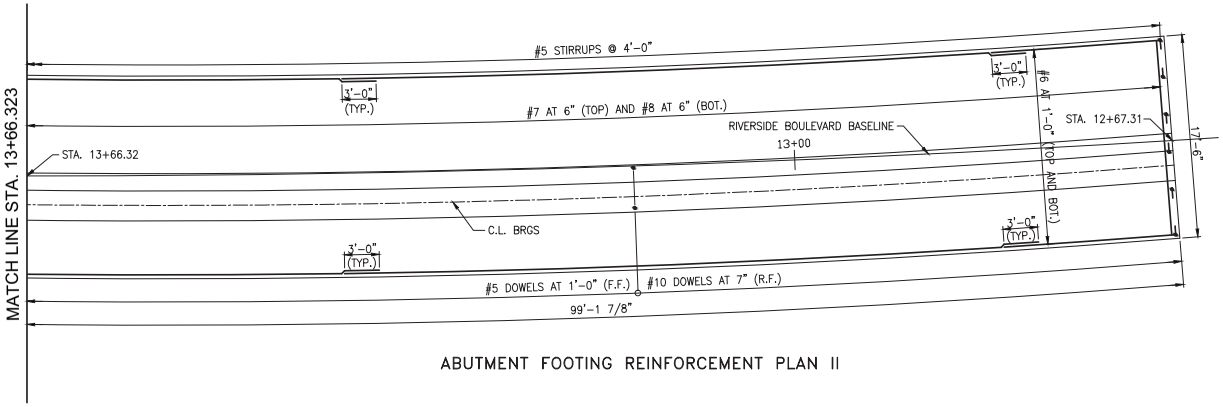

ABUTMENT FOOTING REINFORCEMENT PLAN II

REFERENCES:

1. FOR ABUTMENT SECTION DETAILS, SEE DWG. NO. ST-14.

The RBA Group — Engineers • Architects • Planners
27 UNION SQUARE WEST
NEW YORK, NEW YORK 10003

0 1 2 3 4
ORIGINAL SIZE IN INCHES

PREPARED BY	THE RBA GROUP		
IN CHARGE	LR	DRAFTER	RJF
DESIGNER	WS	CHECKER	WS

CONTRACT NO.	CD NO. M79

TEMPORARY ACCESS ROAD
RIVERSIDE BOULEVARD
WEST 59TH STREET TO WEST 61ST STREET
BOROUGH OF MANHATTAN

ABUTMENT ON RIVERSIDE BOULEVARD FOOTING REINFORCEMENT PLAN

DWG. NO.	SCALE	DATE	SHEET
ST-17	3/16" = 1'-0"	09-15-2014	22 OF 68

RBA - RIVERSIDE BOULEVARD - TEMPORARY ACCESS ROAD
FILE: TAR_ABUT_RIV

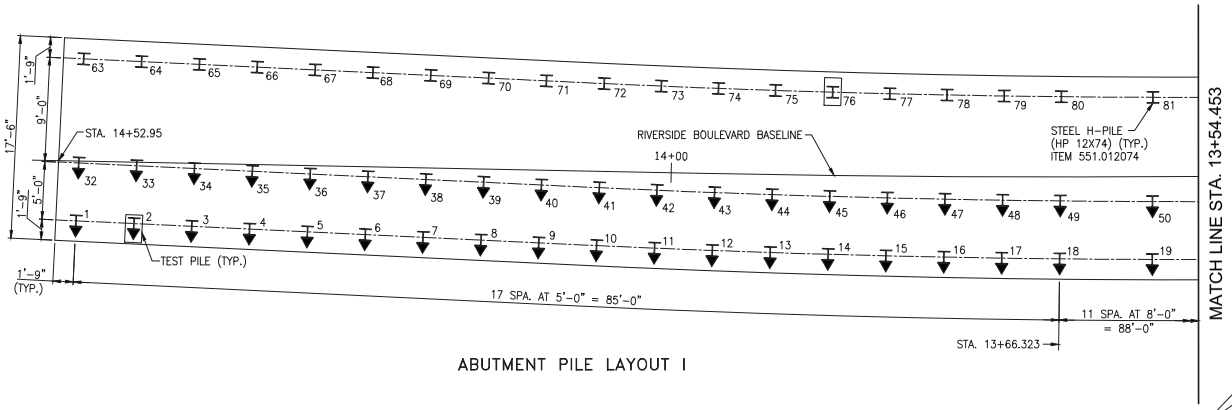

ABUTMENT PILE LAYOUT I

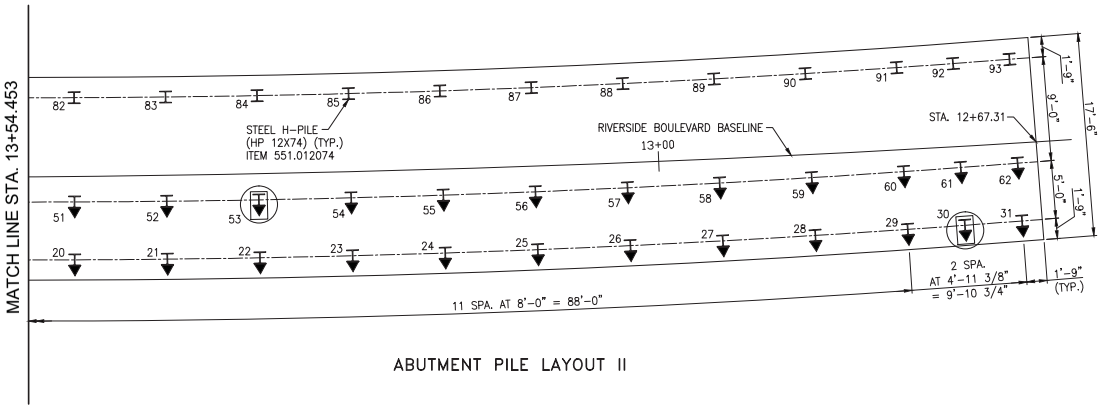

ABUTMENT PILE LAYOUT II

PILE TESTING NOTES:

1. FOR FOUNDATION NOTES SEE DRAWING NO. GN-2
2. HP 12X74 PILES OR APPROVED EQUIVALENT WITH A DRIVING TIP SHALL BE DRIVEN TO END BEARING ON BEDROCK. THE MAXIMUM ALLOWABLE CAPACITY IS 120 TONS PER PILE. PILES SHALL BE LOAD TESTED TO AN ULTIMATE CAPACITY OF 240 TONS (SAFETY FACTOR=2) USING BOTH STATIC AND DYNAMIC LOAD TESTS. TEST PILES LOCATIONS SEE ARE SHOWN HEREIN.
3. STATIC LOAD TESTING SHALL BE PERFORMED FOLLOWING REQUIREMENTS OF NYS DOT STATIC PILE LOAD TEST MANUAL, USING THE INCREMENTAL STATIC LOAD TEST PROCEDURE. DYNAMIC LOAD TESTS SHALL BE PERFORMED IN ACCORDANCE WITH ASTM D4945.
4. FOR BOTH VERTICAL AND BATTER PILES, USE THE FOLLOWING TOLERANCES:

   HORIZONTAL – ALL PILES SHALL BE DRIVEN WITH A HORIZONTAL VARIATION FROM THE PLAN AT CUT-OFF ELEVATIONS OF NOT MORE THAN THREE INCHES (3 INCHES). ANY PILE OUT OF TOLERANCE BY MORE THAN THE AMOUNT STATED ABOVE MAY BE REJECTED. IF REJECTED, IT SHALL BE REPLACED BY ANOTHER PILE OR PILES, AT LOCATIONS SPECIFIED BY THE ENGINEER AT THE CONTRACTOR'S EXPENSE.

   VERTICAL – IF THE AXIS OF ANY PILE IS INSTALLED OUT OF ALIGNMENT BY MORE THAN TWO PERCENT (2%). THE ENGINEER MUST BE NOTIFIED AND THE FOUNDATION SHALL BE ANALYZED AS NECESSARY TO ENSURE THAT IT CAN RESIST THE LATERAL AND VERTICAL FORCES. MODIFICATION TO THE FOUNDATION DESIGN SHALL BE APPROVED BY THE RESIDENT ENGINEER. THE COST OF THE ANALYSIS AND FOUNDATION DESIGN SHALL BE PAID BY THE CONTRACTOR.
5. THE CONTRACTOR MAY SELECT AN ALTERNATIVE PILES TYPE IN ORDER TO ACHIEVE THE DESIGN CAPACITY.

LEGEND:

- STEEL H-PILE (HP 12X74), ITEM 551.012074
- TEST PILE FOR DYNAMIC TEST
- TEST PILE FOR STATIC TEST

REFERENCES:

1. FOR GENERAL PLAN, SEE DWG. NO. ST-1.
2. FOR BORING LOGS, SEE DWG. NOS. B-1 TO B-17.

PILE TABLE

LOCATION	NO. OF TEST PILES	NO. OF PILES	TOTAL NO. OF PILES	ESTIMATED TIP EL. (FT.)	ESTIMATED LENGTH OF TEST PILES (L.F.)	ESTIMATED LENGTH OF PILES (L.F.)	TOTAL LENGTH OF PILES INCLUDING TEST PILES (L.F.)
ABUTMENT ON RIVERSIDE BOULEVARD	5	93	98	APPROX. -38.00	36.00	36.00	3528.00

NOTE: SEE DWG. NO. ST-8 FOR "SPLICE FOR STEEL BEARING PILE" DETAIL AND "STEEL BEARING PILE SHOES" DETAIL.

The RBA Group — ENGINEERS • ARCHITECTS • PLANNERS
27 UNION SQUARE WEST
NEW YORK, NEW YORK 10003

0 1 2 3 4
ORIGINAL SIZE IN INCHES

PREPARED BY THE RBA GROUP
IN CHARGE LR DRAFTER RJF
DESIGNER WS CHECKER WS

CONTRACT NO. | CD NO. M79

TEMPORARY ACCESS ROAD
RIVERSIDE BOULEVARD
WEST 59TH STREET TO WEST 61ST STREET
BOROUGH OF MANHATTAN

ABUTMENT ON RIVERSIDE BOULEVARD
PILE LAYOUT

DWG. NO.	SCALE	DATE	SHEET
ST-18	3/16" = 1'-0"	09-15-2014	23 OF 68

RBA - RIVERSIDE BOULEVARD - TEMPORARY ACCESS ROAD
FILE: TAR_ABUT_RIV

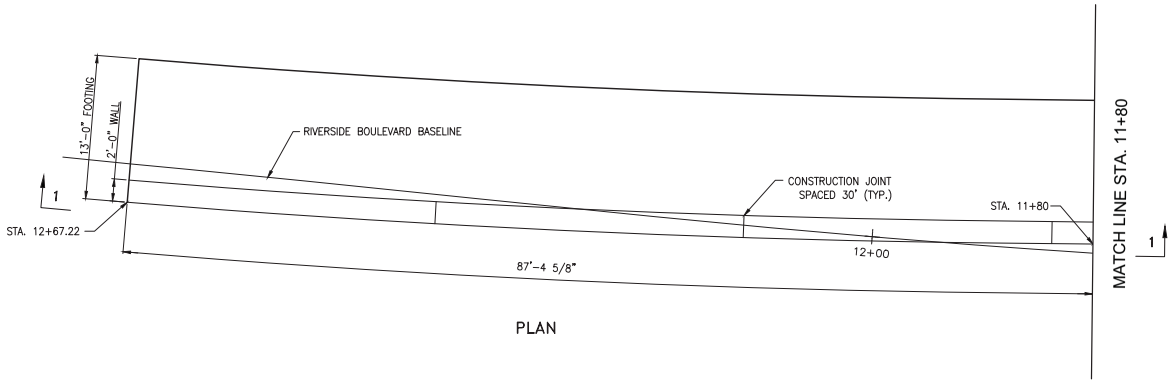

PLAN

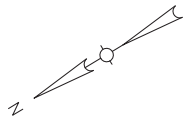

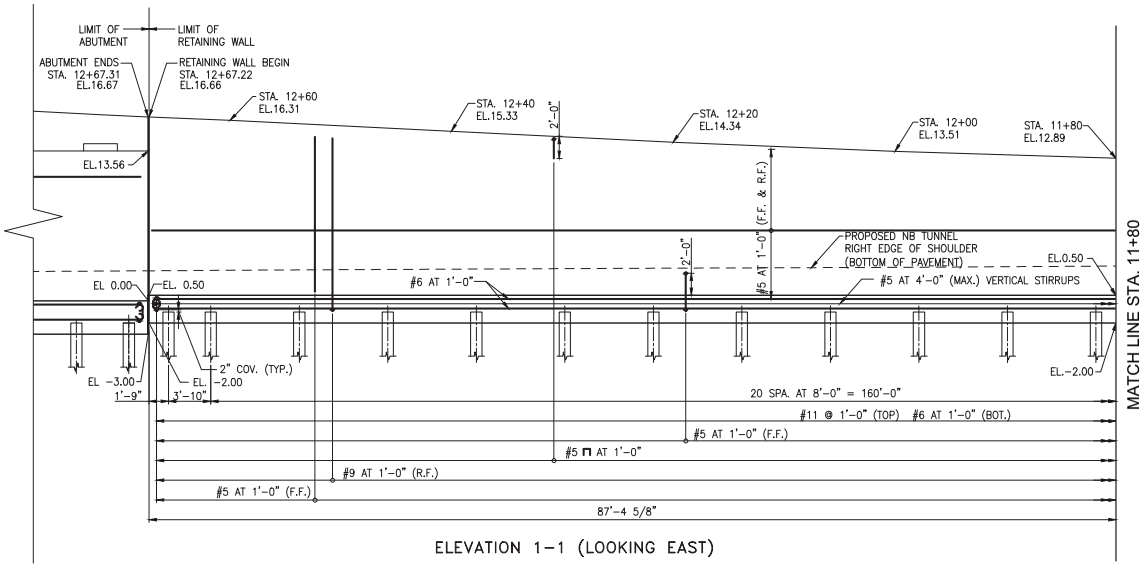

ELEVATION 1-1 (LOOKING EAST)

REFERENCES:

1. FOR GENERAL PLAN, SEE DWG. NO. ST-1.
2. FOR ABUTMENT ON RIVERSIDE BOULEVARD PLANS, SEE DWG. NOS. ST-12 TO ST-18.

CONTRACT NO.	CD NO. M79

TEMPORARY ACCESS ROAD
RIVERSIDE BOULEVARD
WEST 59TH STREET TO WEST 61ST STREET
BOROUGH OF MANHATTAN

RETAINING WALL ON
RIVERSIDE BOULEVARD
PLAN AND ELEVATION I

DWG. NO.	SCALE	DATE	SHEET
ST-19	3/16" = 1'-0"	09-15-2014	24 OF 68

The RBA Group — ENGINEERS • ARCHITECTS • PLANNERS
27 UNION SQUARE WEST
NEW YORK, NEW YORK 10003

0 1 2 3 4
ORIGINAL SIZE IN INCHES

PREPARED BY	THE RBA GROUP		
IN CHARGE	LR	DRAFTER	RJF
DESIGNER	WS	CHECKER	WS

RBA - RIVERSIDE BOULEVARD - TEMPORARY ACCESS ROAD
FILE: TAR_RET_NBRIV

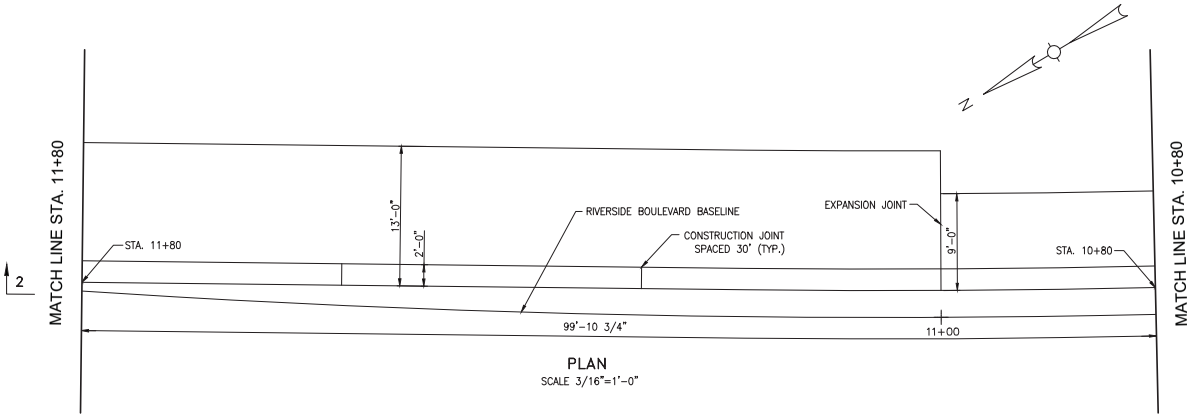

PLAN
SCALE 3/16"=1'-0"

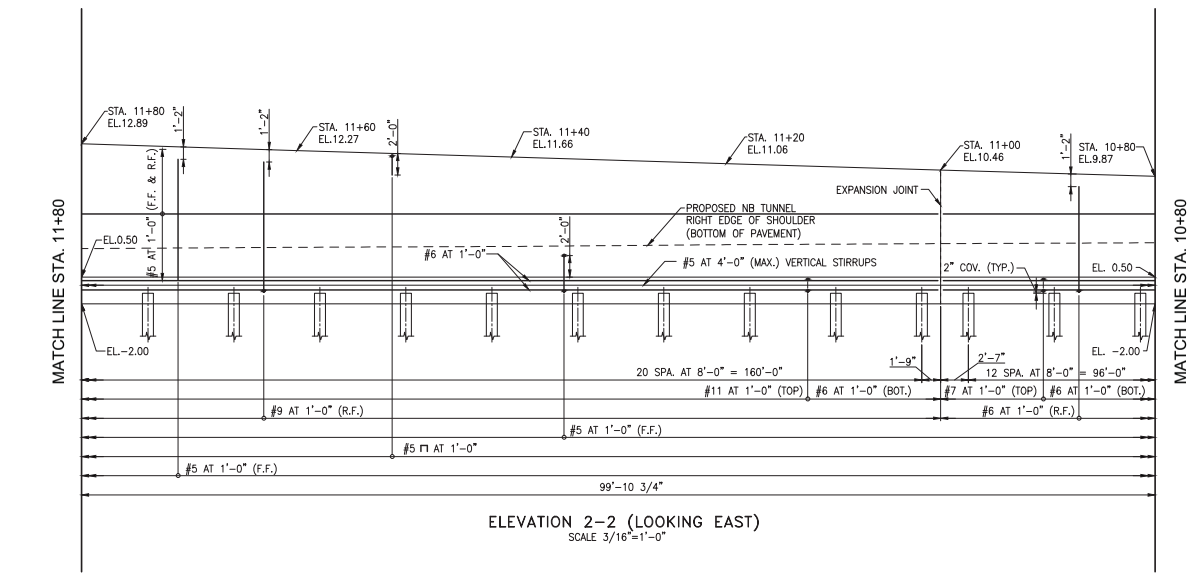

ELEVATION 2–2 (LOOKING EAST)
SCALE 3/16"=1'-0"

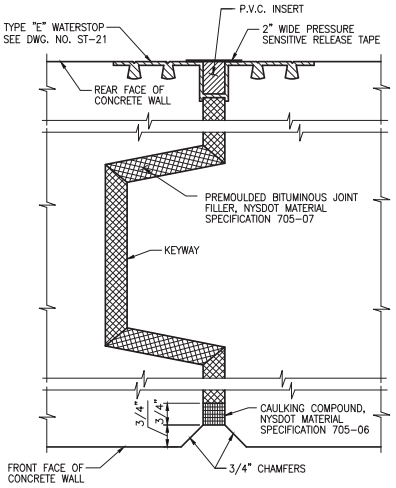

TYPICAL EXPANSION JOINT PLAN
N.T.S.

NOTES:

1. REINFORCEMENT SHALL NEVER EXTEND THROUGH AN EXPANSION JOINT. EXPANSION JOINTS IN WALL SHALL BE PROVIDED WITH A SHEAR KEY, A TYPE "E" PVC WATERSTOP, AND A LAYER OF JOINT MATERIAL SEPARATING THE CONCRETE SURFACES. THE REQUIREMENTS FOR EXPANSION JOINTS IN FOOTINGS SHALL BE THE SAME EXCEPT THAT THE WATERSTOPS WILL NOT BE REQUIRED.

REFERENCES:

1. FOR GENERAL PLAN, SEE DWG. NO. ST-1.

CONTRACT NO. | CD NO. M79

TEMPORARY ACCESS ROAD
RIVERSIDE BOULEVARD
WEST 59TH STREET TO WEST 61ST STREET
BOROUGH OF MANHATTAN

RETAINING WALL ON RIVERSIDE BOULEVARD PLAN AND ELEVATION II

DWG. NO.	SCALE	DATE	SHEET
ST-20	AS SHOWN	09-15-2014	25 OF 68

The RBA Group — ENGINEERS • ARCHITECTS • PLANNERS
27 UNION SQUARE WEST
NEW YORK, NEW YORK 10003

0 1 2 3 4
ORIGINAL SIZE IN INCHES

PREPARED BY THE RBA GROUP
IN CHARGE LR | DRAFTER RJF
DESIGNER WS | CHECKER WS

RBA - RIVERSIDE BOULEVARD - TEMPORARY ACCESS ROAD
FILE: TAR_RET_NBRIV

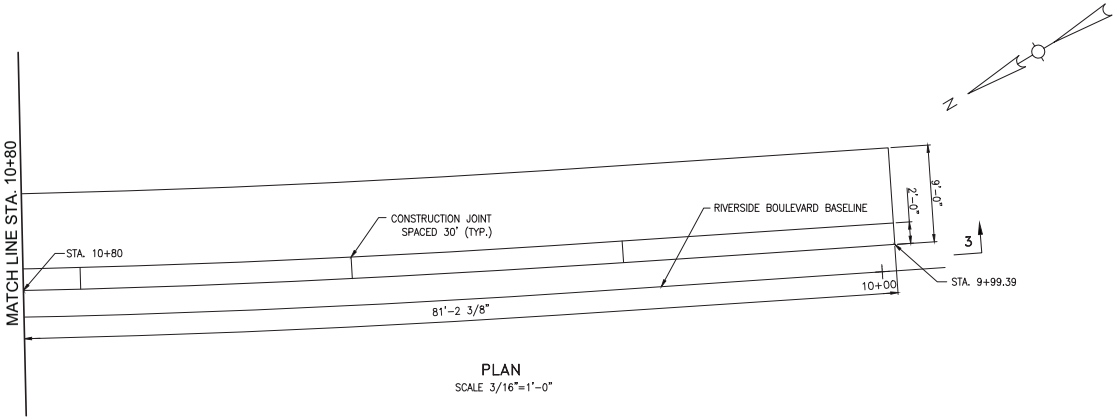

PLAN
SCALE 3/16"=1'-0"

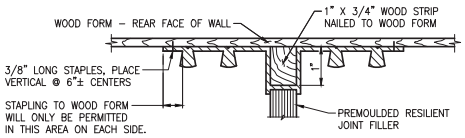

STAGE ONE – PRIOR TO POURING CONCRETE

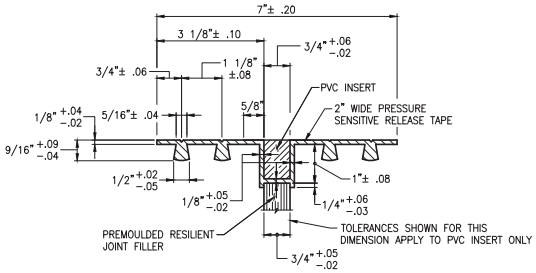

STAGE TWO – AFTER FORMS HAVE BEEN REMOVED

TYPE "E" WATERSTOP
N.T.S.

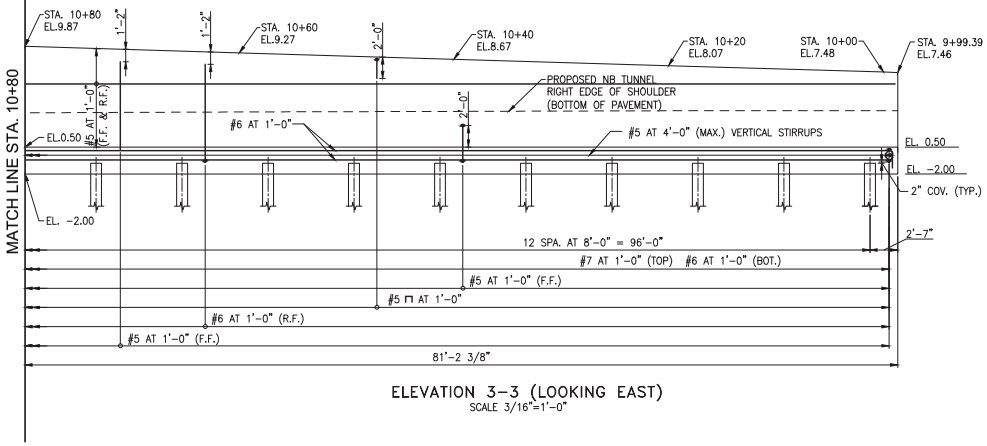

ELEVATION 3–3 (LOOKING EAST)
SCALE 3/16"=1'-0"

NOTES:

HOLES MUST NOT BE MADE IN WATERSTOP FOR ANY PURPOSE EXCEPT AS REQUIRED FOR STAPLING TO FORMS.

TYPE "E" WATERSTOP AND PVC INSERT SHALL BE LIGHT GRAY IN COLOR. PVC INSERT SHALL BE CLOSED CELL POLYVINYL (SP) GRADE VE–45 AS PER ASTM D1667 OR CLOSED CELL RUBBER GRADE RE–45, CLASS E, AS PER ASTM D1056.

PVC INSERT AND PRESSURE SENSITIVE RELEASE TAPE SHALL BE INSTALLED IN THE FIELD PRIOR TO PLACING THE BACKFILL.

REFERENCES:

1. FOR GENERAL PLAN, SEE DWG. NO. ST–1.

CONTRACT NO.	CD NO. M79

TEMPORARY ACCESS ROAD
RIVERSIDE BOULEVARD
WEST 59TH STREET TO WEST 61ST STREET
BOROUGH OF MANHATTAN

RETAINING WALL ON
RIVERSIDE BOULEVARD
PLAN AND ELEVATION III

DWG. NO.	SCALE	DATE	SHEET
ST-21	AS SHOWN	09-15-2014	26 OF 68

The RBA Group — ENGINEERS • ARCHITECTS • PLANNERS
27 UNION SQUARE WEST
NEW YORK, NEW YORK 10003

0 1 2 3 4
ORIGINAL SIZE IN INCHES

PREPARED BY	THE RBA GROUP		
IN CHARGE	LR	DRAFTER	RJF
DESIGNER	WS	CHECKER	WS

RBA - RIVERSIDE BOULEVARD - TEMPORARY ACCESS ROAD
FILE: TAR_RET_NBRIV

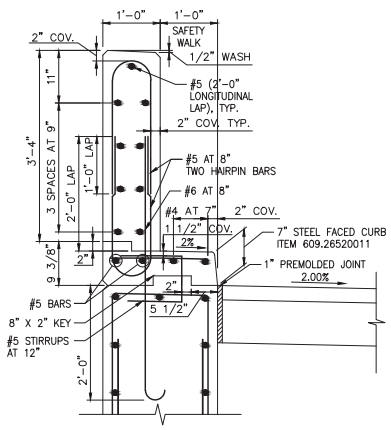

DETAIL 'A'
CONCRETE PARAPET
SCALE 1/2"=1'-0"

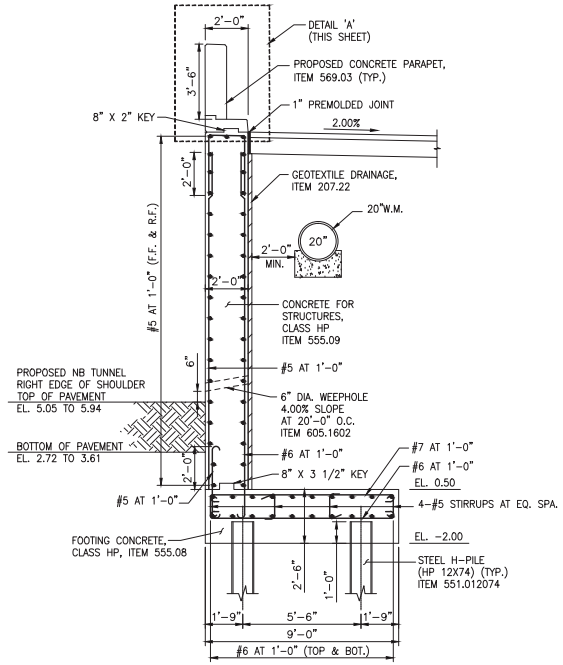

TYPICAL SECTION (LOOKING NORTH)
STA. 9+99.39 – 11+00
SCALE 5/16"=1'-0"

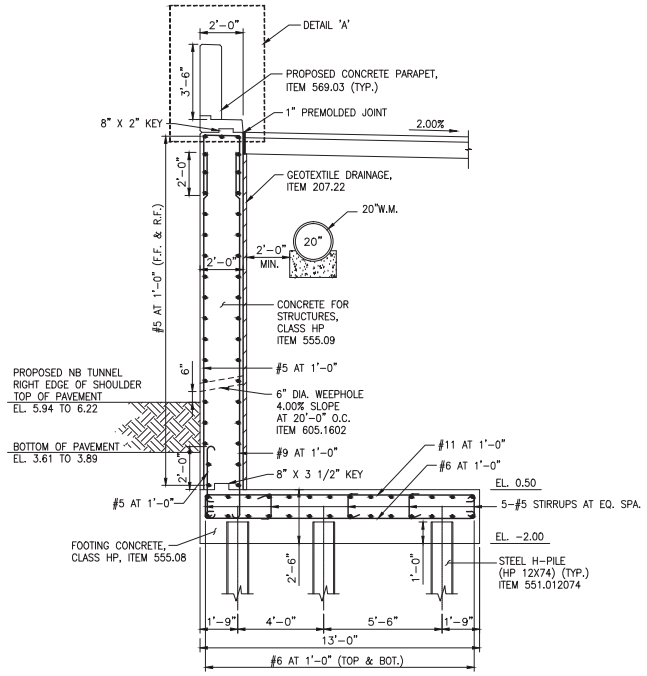

TYPICAL SECTION (LOOKING NORTH)
STA. 11+00 – 12+67.22
SCALE 5/16"=1'-0"

NOTES:

1. ALL REINFORCING BARS SHALL BE "EPOXY-COATED BAR REINFORCEMENT FOR STRUCTURES", ITEM 556.0202.
2. PROVIDE "ANTI-GRAFFITI PROTECTIVE COATING" TO ALL EXPOSED SURFACE OF RETAINING WALL, ITEM 559.90010011.
3. VERTICAL STIRRUPS USING #5 BARS WITH ALTERNATING 135° HOOKS AT ONE END AND 90° HOOKS AT THE OTHER, SHALL BE USED IN ALL FOOTINGS TO CONNECT THE TOP AND BOTTOM REINFORCEMENT MATS.

The RBA Group — ENGINEERS • ARCHITECTS • PLANNERS
27 UNION SQUARE WEST
NEW YORK, NEW YORK 10003

0 1 2 3 4
ORIGINAL SIZE IN INCHES

PREPARED BY	THE RBA GROUP		
IN CHARGE	LR	DRAFTER	RJF
DESIGNER	WS	CHECKER	WS

CONTRACT NO.	CD NO. M79

TEMPORARY ACCESS ROAD
RIVERSIDE BOULEVARD
WEST 59TH STREET TO WEST 61ST STREET
BOROUGH OF MANHATTAN

RETAINING WALL ON
RIVERSIDE BOULEVARD
SECTION

DWG. NO.	SCALE	DATE	SHEET
ST-22	AS SHOWN	09-15-2014	27 OF 68

RBA - RIVERSIDE BOULEVARD - TEMPORARY ACCESS ROAD
FILE: TAR_RET_NBRIV

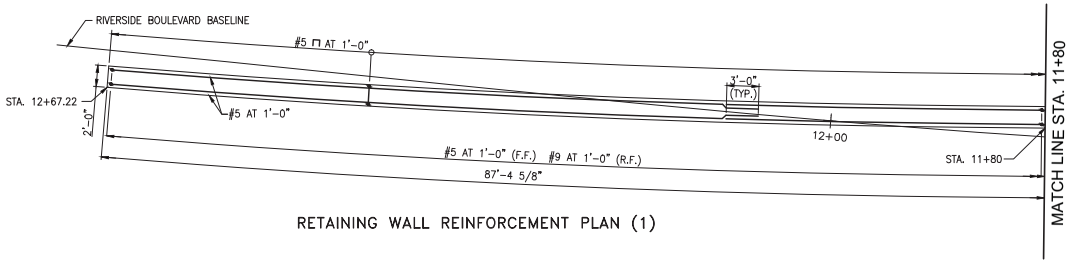

RETAINING WALL REINFORCEMENT PLAN (1)

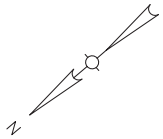

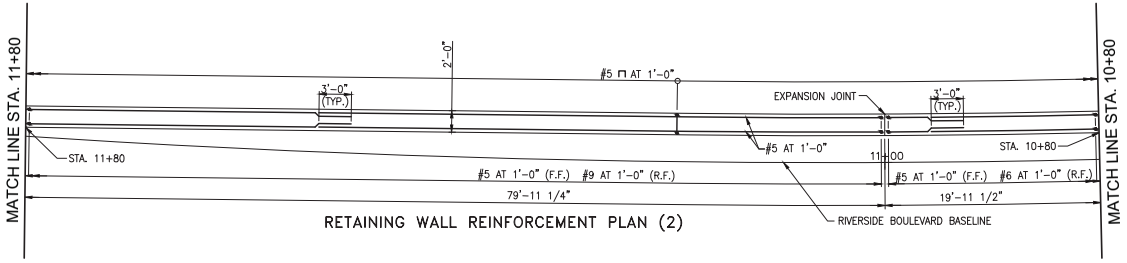

RETAINING WALL REINFORCEMENT PLAN (2)

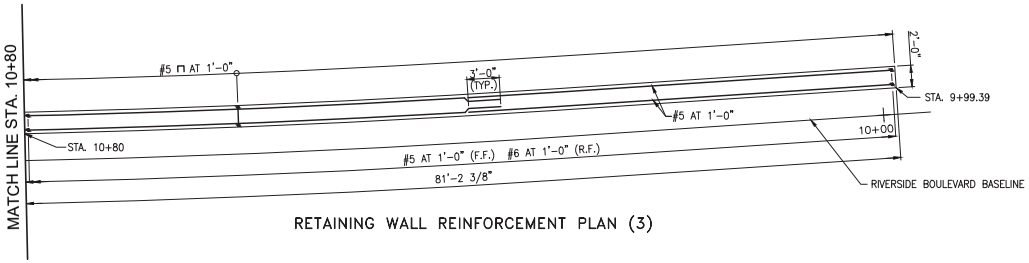

RETAINING WALL REINFORCEMENT PLAN (3)

REFERENCES:

1. FOR RETAINING WALL SECTION DETAILS, SEE DWG. NO. ST-22.

CONTRACT NO.	CD NO. M79

TEMPORARY ACCESS ROAD
RIVERSIDE BOULEVARD
WEST 59TH STREET TO WEST 61ST STREET
BOROUGH OF MANHATTAN

RETAINING WALL ON
RIVERSIDE BOULEVARD
WALL REINFORCEMENT PLAN

DWG. NO.	SCALE	DATE	SHEET
ST-23	3/16" = 1'-0"	09-15-2014	28 OF 68

The RBA Group — ENGINEERS • ARCHITECTS • PLANNERS
27 UNION SQUARE WEST
NEW YORK, NEW YORK 10003

0 1 2 3 4
ORIGINAL SIZE IN INCHES

PREPARED BY	THE RBA GROUP		
IN CHARGE	LR	DRAFTER	RJF
DESIGNER	WS	CHECKER	WS

RBA - RIVERSIDE BOULEVARD - TEMPORARY ACCESS ROAD
FILE: TAR_RET_NBRIV

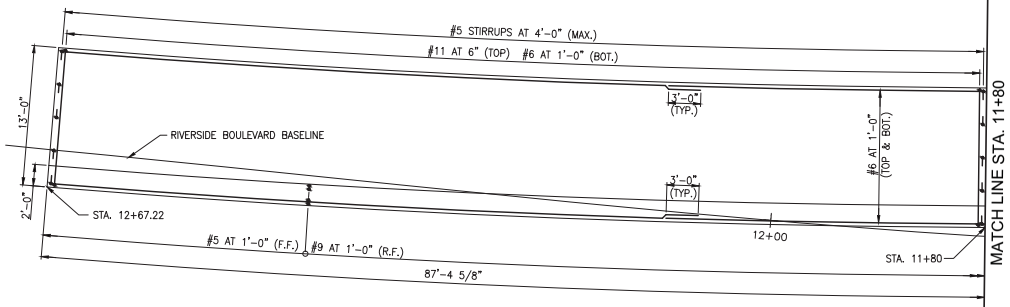

RETAINING WALL FOOTING REINFORCEMENT PLAN (1)

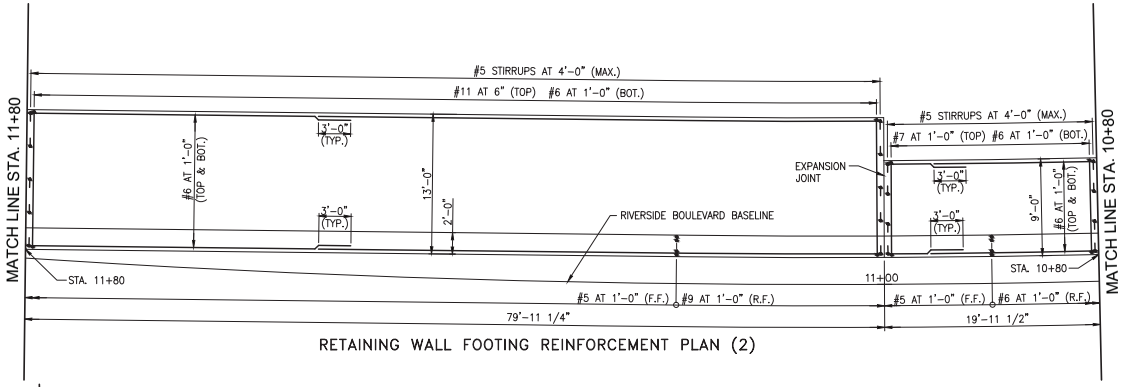

RETAINING WALL FOOTING REINFORCEMENT PLAN (2)

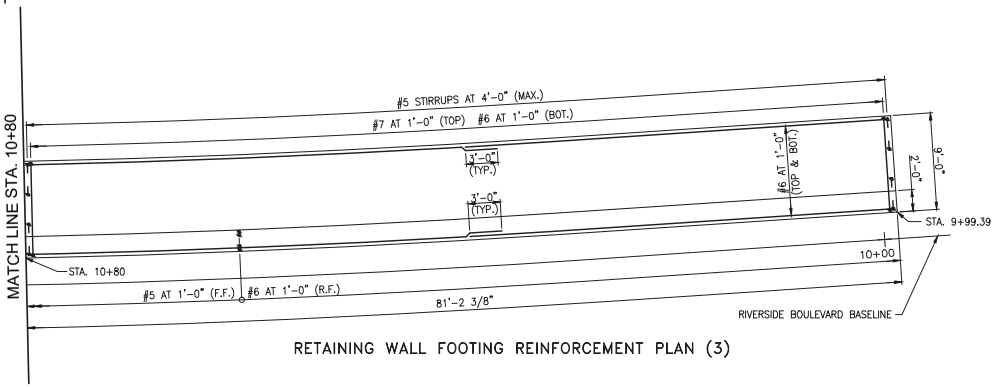

RETAINING WALL FOOTING REINFORCEMENT PLAN (3)

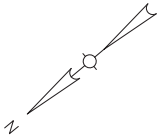

REFERENCES:

1. FOR RETAINING WALL SECTION DETAILS, SEE DWG. NO. ST-22.

CONTRACT NO.	CD NO. M79

TEMPORARY ACCESS ROAD
RIVERSIDE BOULEVARD
WEST 59TH STREET TO WEST 61ST STREET
BOROUGH OF MANHATTAN

RETAINING WALL ON RIVERSIDE BOULEVARD FOOTING REINFORCEMENT PLAN

DWG. NO.	SCALE	DATE	SHEET
ST-24	3/16" = 1'-0"	09-15-2014	29 OF 68

The RBA Group
ENGINEERS • ARCHITECTS • PLANNERS
27 UNION SQUARE WEST
NEW YORK, NEW YORK 10003

0 1 2 3 4
ORIGINAL SIZE IN INCHES

PREPARED BY	THE RBA GROUP		
IN CHARGE	LR	DRAFTER	RJF
DESIGNER	WS	CHECKER	WS

RBA - RIVERSIDE BOULEVARD - TEMPORARY ACCESS ROAD
FILE: TAR_RET_NBRIV

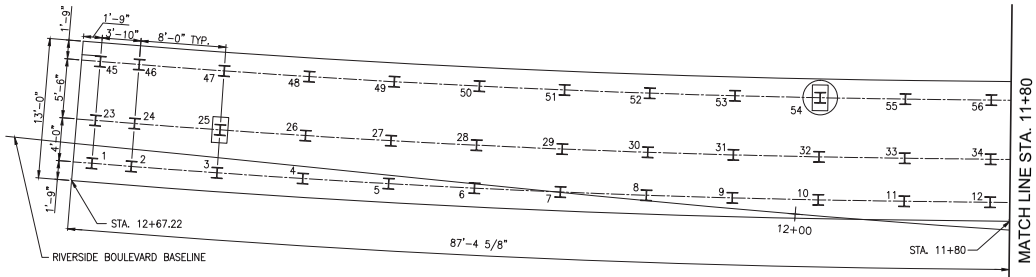

RETAINING WALL PILE LAYOUT (1)

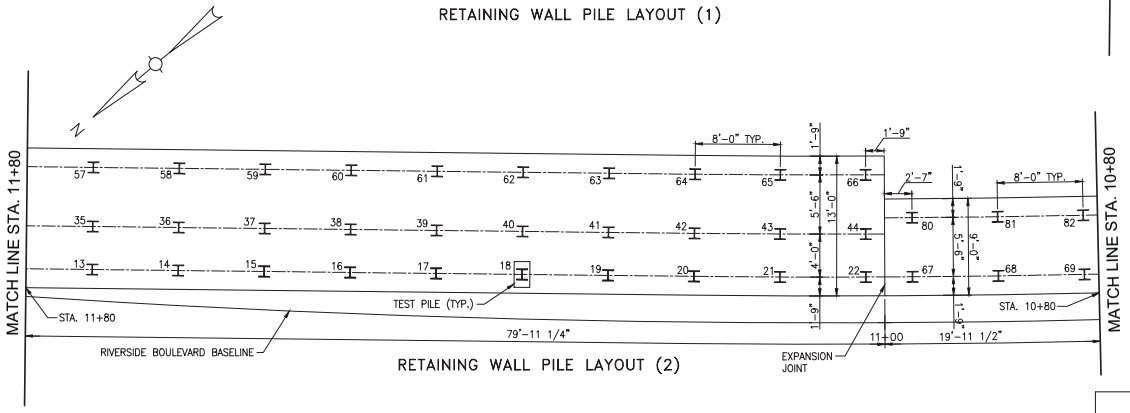

RETAINING WALL PILE LAYOUT (2)

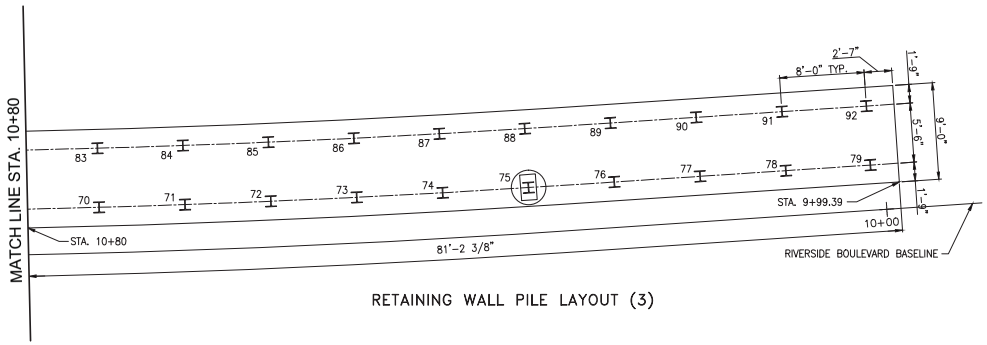

RETAINING WALL PILE LAYOUT (3)

PILE TESTING NOTES:

1. FOR FOUNDATION NOTES SEE DRAWING NO. GN-2
2. HP 12X74 PILES OR APPROVED EQUIVALENT WITH A DRIVING TIP SHALL BE DRIVEN TO END BEARING ON BEDROCK. THE MAXIMUM ALLOWABLE CAPACITY IS 120 TONS PER PILE. PILES SHALL BE LOAD TESTED TO AN ULTIMATE CAPACITY OF 240 TONS (SAFETY FACTOR=2) USING BOTH STATIC AND DYNAMIC LOAD TESTS. TEST PILES LOCATIONS SEE ARE SHOWN HEREIN.
3. STATIC LOAD TESTING SHALL BE PERFORMED FOLLOWING REQUIREMENTS OF NYS DOT STATIC PILE LOAD TEST MANUAL, USING THE INCREMENTAL STATIC LOAD TEST PROCEDURE. DYNAMIC LOAD TESTS SHALL BE PERFORMED IN ACCORDANCE WITH ASTM D4945.
4. FOR BOTH VERTICAL AND BATTER PILES, USE THE FOLLOWING TOLERANCES:

   HORIZONTAL – ALL PILES SHALL BE DRIVEN WITH A HORIZONTAL VARIATION FROM THE PLAN AT CUT-OFF ELEVATIONS OF NOT MORE THAN THREE INCHES (3 INCHES). ANY PILE OUT OF TOLERANCE BY MORE THAN THE AMOUNT STATED ABOVE MAY BE REJECTED. IF REJECTED, IT SHALL BE REPLACED BY ANOTHER PILE OR PILES, AT LOCATIONS SPECIFIED BY THE ENGINEER AT THE CONTRACTOR'S EXPENSE.

   VERTICAL – IF THE AXIS OF ANY PILE IS INSTALLED OUT OF ALIGNMENT BY MORE THAN TWO PERCENT (2%). THE ENGINEER MUST BE NOTIFIED AND THE FOUNDATION SHALL BE ANALYZED AS NECESSARY TO ENSURE THAT IT CAN RESIST THE LATERAL AND VERTICAL FORCES. MODIFICATION TO THE FOUNDATION DESIGN SHALL BE APPROVED BY THE RESIDENT ENGINEER. THE COST OF THE ANALYSIS AND FOUNDATION DESIGN SHALL BE PAID BY THE CONTRACTOR.
5. THE CONTRACTOR MAY SELECT AN ALTERNATIVE PILES TYPE IN ORDER TO ACHIEVE THE DESIGN CAPACITY.

LEGEND:

- STEEL H-PILE (HP 12X74), ITEM 551.012074
- TEST PILE FOR DYNAMIC PILE LOAD TEST
- TEST PILE FOR STATIC PILE LOAD TEST

PILE TABLE

LOCATION	NO. OF TEST PILES	NO. OF PILES	TOTAL NO. OF PILES	ESTIMATED TIP EL. (FT.)	ESTIMATED LENGTH OF TEST PILES (L.F.)	ESTIMATED LENGTH OF PILES (L.F.)	TOTAL LENGTH OF PILES INCLUDING TEST PILES (L.F.)
RETAINING WALL ON RIVERSIDE BOULEVARD	6	92	98	APPROX. -39.00	38.00	38.00	3724.00

NOTE: SEE DWG. NO. ST-8 FOR "SPLICE FOR STEEL BEARING PILE" DETAIL AND "STEEL BEARING PILE SHOES" DETAIL.

REFERENCES:

1. FOR GENERAL PLAN, SEE DWG. NO. ST-1.
2. FOR BORING LOGS, SEE DWG. NOS. B-1 TO B-17.

CONTRACT NO. | CD NO. M79

TEMPORARY ACCESS ROAD
RIVERSIDE BOULEVARD
WEST 59TH STREET TO WEST 61ST STREET
BOROUGH OF MANHATTAN

RETAINING WALL ON RIVERSIDE BOULEVARD PILE LAYOUT

DWG. NO.	SCALE	DATE	SHEET
ST-25	3/16" = 1'-0"	09-15-2014	30 OF 68

The RBA Group ENGINEERS • ARCHITECTS • PLANNERS
27 UNION SQUARE WEST
NEW YORK, NEW YORK 10003

0 1 2 3 4
ORIGINAL SIZE IN INCHES

PREPARED BY THE RBA GROUP
IN CHARGE LR DRAFTER RJF
DESIGNER WS CHECKER WS

RBA - RIVERSIDE BOULEVARD - TEMPORARY ACCESS ROAD
FILE: TAR_RET_NBRIV

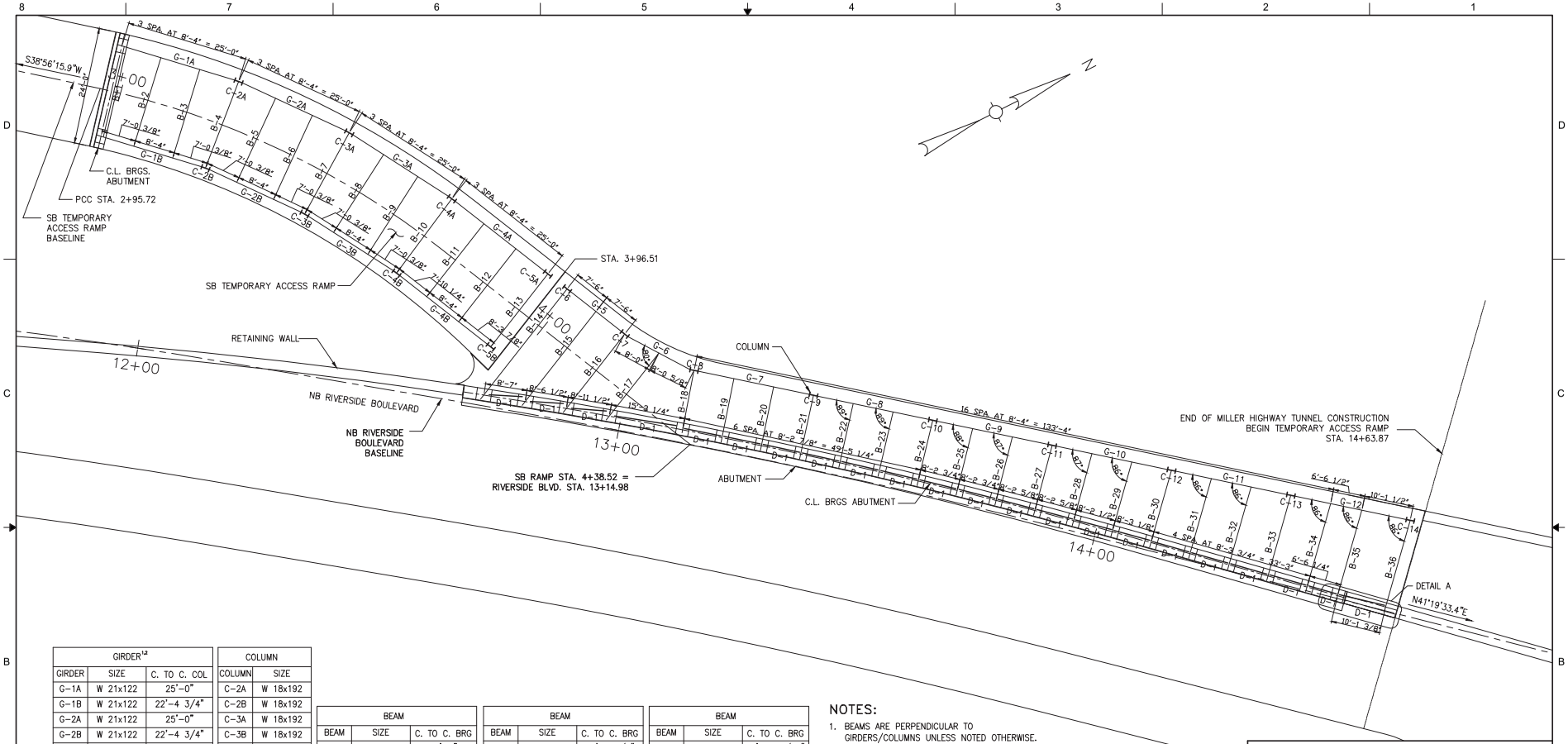

GIRDER[1,2]		
GIRDER	SIZE	C. TO C. COL
G-1A	W 21x122	25'-0"
G-1B	W 21x122	22'-4 3/4"
G-2A	W 21x122	25'-0"
G-2B	W 21x122	22'-4 3/4"
G-3A	W 21x122	25'-0"
G-3B	W 21x122	22'-4 3/4"
G-4A	W 21x122	25'-0"
G-4B	W 21x122	24'-6 1/8"
G-5	W 21x122	15'-0"
G-6	W 21x122	16'-0 5/8"
G-7	W 21x122	25'-0"
G-8	W 21x122	25'-0"
G-9	W 21x122	25'-0"
G-10	W 21x122	25'-0"
G-11	W 21x122	25'-0"
G-12	W 21x122	25'-0"

1. GIRDER LENGTH IS MEASURED FROM COLUMN CENTER TO CENTER FOR ALL GIRDERS.
2. ALL GIRDERS ARE FRACTURE CRITICAL MEMBERS. SEE STRUCTURAL STEEL NOTE 8 ON DWG. NO. GN-1.

COLUMN	
COLUMN	SIZE
C-2A	W 18x192
C-2B	W 18x192
C-3A	W 18x192
C-3B	W 18x192
C-4A	W 18x192
C-4B	W 18x192
C-5A	W 18x192
C-5B	W 18x192
C-6	W 18x192
C-7	W 18x192
C-8	W 18x192
C-9	W 18x192
C-10	W 18x192
C-11	W 18x192
C-12	W 18x192
C-13	W 18x192
C-14	W 18x192

BEAM		
BEAM	SIZE	C. TO C. BRG
B-1*	W 14x61	19'-0"
B-2*	W 14x61	18'-11 7/16"
B-3*	W 14x61	18'-11 7/16"
B-4*	W 14x61	19'-0"
B-5*	W 14x61	18'-11 7/16"
B-6*	W 14x61	18'-11 7/16"
B-7*	W 14x61	19'-0"
B-8*	W 14x61	18'-11 7/16"
B-9*	W 14x61	18'-11 7/16"
B-10*	W 14x61	19'-0"
B-11*	W 14x61	18'-11 15/16"
B-12*	W 14x61	18'-11 15/16"
B-13*	W 14x61	18'-11 15/16"

* BEAM LENGTH IS MEASURED FROM COLUMN CENTER TO CENTER.

BEAM		
BEAM	SIZE	C. TO C. BRG
B-14**	W 14x120	27'-7 5/8"
B-15**	W 14x120	23'-5 3/4"
B-16**	W 14x61	19'-4 3/4"
B-17**	W 14x61	16'-5 3/8"
B-18**	W 14x61	12'-4 7/8"
B-19**	W 14x61	12'-3 13/16"
B-20**	W 14x61	12'-3 7/16"
B-21**	W 14x61	12'-3 3/4"
B-22**	W 14x61	12'-4 15/16"
B-23**	W 14x61	12'-6 13/16"
B-24**	W 14x61	12'-9 7/16"
B-25**	W 14x61	13'-0 13/16"

BEAM		
BEAM	SIZE	C. TO C. BRG
B-26**	W 14x61	13'-4 15/16"
B-27**	W 14x61	13'-9 7/8"
B-28**	W 14x61	14'-3 1/2"
B-29**	W 14x61	14'-9 7/8"
B-30**	W 14x61	15'-4 7/8"
B-31**	W 14x61	15'-11 15/16"
B-32**	W 14x61	16'-7"
B-33**	W 14x61	17'-2 1/16"
B-34**	W 14x61	17'-9 1/8"
B-35**	W 14x61	18'-2 11/16"
B-36**	W 14x61	18'-5 13/16"

** BEAM LENGTH IS MEASURED FROM COLUMN CENTER TO THE C.L. OF THE ABUTMENT BEARING.

NOTES:

1. BEAMS ARE PERPENDICULAR TO GIRDERS/COLUMNS UNLESS NOTED OTHERWISE.
2. STRUCTURAL STEEL SHALL BE PAID UNDER ITEM 564.05.

REFERENCES:

1. FOR GENERAL NOTES, SEE DWG. NOS. GN-1 AND GN-2.
2. FOR GENERAL PLAN AND PROFILE, SEE DWG NOS. ST-1, ST-5 AND ST-6.
3. FOR TYPICAL SECTION, SEE DWG. NOS. ST-2 TO ST-4.
4. FOR GIRDER DETAILS, SEE DWG NOS. ST-27 TO ST-29.
5. FOR BEARING DETAILS, SEE DWG NOS. ST-34 AND ST-35.
6. FOR CAMBER TABLE, SEE DWG NO. ST-32.
7. FOR HAUNCH TABLE, SEE DWG NO. ST-33.
8. FOR DETAIL A, SEE DWG. NO. ST-40.
9. FOR GIRDER-ABUTMENT CONNECTION DETAILS, SEE DWG NO. ST-3.

DIAPHRAGMS		
DIAPHRAGM	SIZE	LENGTH (C.L. TO C.L. GIRDERS)
D1*	WT 10.5x22	VARIES: (FROM 6'-6 1/4" TO 15'-3 1/4")

* DIAPHRAGM LENGTH IS MEASURED FROM THE MIDPOINT OF BEARING TO THE MIDPOINT OF BEARING.

The RBA Group — ENGINEERS • ARCHITECTS • PLANNERS
27 UNION SQUARE WEST
NEW YORK, NEW YORK 10003

0 1 2 3 4
ORIGINAL SIZE IN INCHES

PREPARED BY	THE RBA GROUP		
IN CHARGE	LR	DRAFTER	RJF
DESIGNER	WS	CHECKER	WS

CONTRACT NO. | CD NO. M79

TEMPORARY ACCESS ROAD
RIVERSIDE BOULEVARD
WEST 59TH STREET TO WEST 61ST STREET
BOROUGH OF MANHATTAN

FRAMING PLAN

DWG. NO.	SCALE	DATE	SHEET
ST-26	1" = 10'	09-15-2014	31 OF 68

RBA - RIVERSIDE BOULEVARD - TEMPORARY ACCESS ROAD
FILE: TAR_FRAMPLN

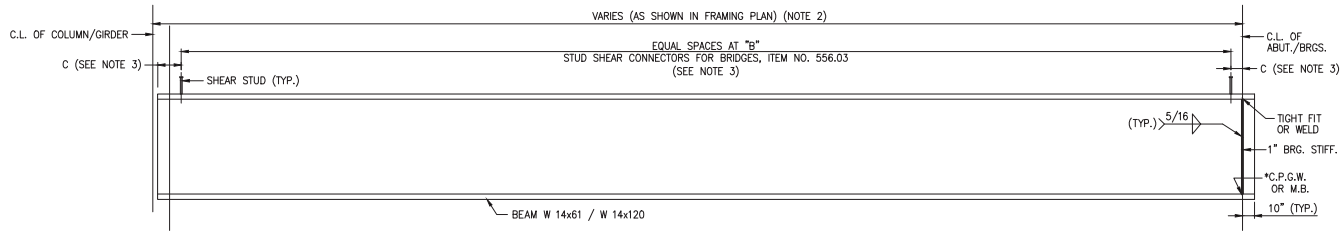

BEAM ELEVATION

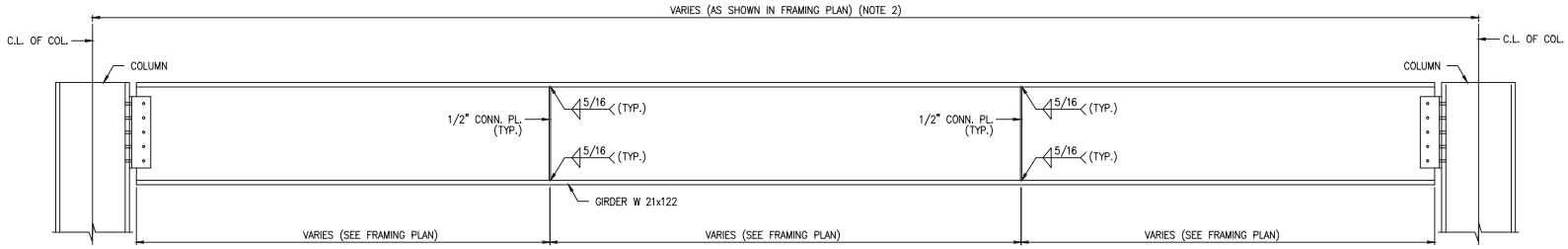

GIRDER ELEVATION

REFERENCES:

1. FOR GIRDER CONNECTION DETAILS, SEE DWG. NO. ST-28.
2. FOR FRAMING PLAN, SEE DWG. NO. ST-26.
3. FOR SHEAR STUD DETAILS, SPACING "B", AND DISTANCE "C", SEE DWG. NO. ST-29.

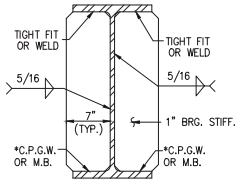

BEARING STIFFENER AT ABUTMENT

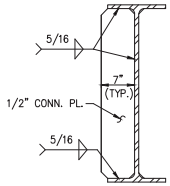

GIRDER CONNECTION PLATE

*C.P.G.W. = COMPLETE PENETRATION GROOVE WELD
*MB = MILL TO BEAR

CONTRACT NO.	CD NO. M79

TEMPORARY ACCESS ROAD
RIVERSIDE BOULEVARD
WEST 59TH STREET TO WEST 61ST STREET
BOROUGH OF MANHATTAN

STEEL DETAILS - I

DWG. NO.	SCALE	DATE	SHEET
ST-27	N.T.S.	09-15-2014	32 OF 68

The RBA Group — ENGINEERS • ARCHITECTS • PLANNERS
27 UNION SQUARE WEST
NEW YORK, NEW YORK 10003

0 1 2 3 4
ORIGINAL SIZE IN INCHES

PREPARED BY THE RBA GROUP
IN CHARGE LR DRAFTER RJF
DESIGNER WS CHECKER WS

RBA - RIVERSIDE BOULEVARD - TEMPORARY ACCESS ROAD
FILE: TAR_STEEL_DET1

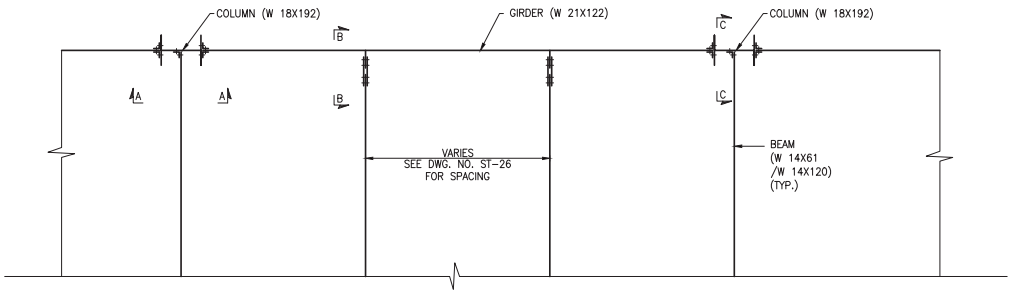

PARTIAL FRAMING PLAN

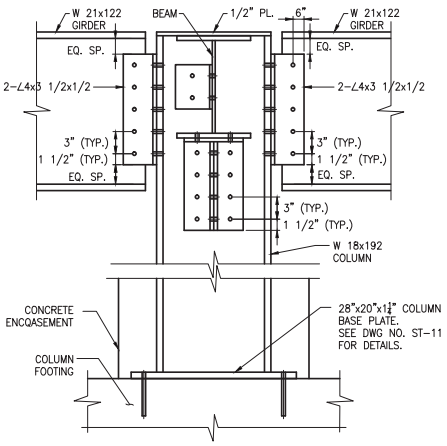

SECTION A-A

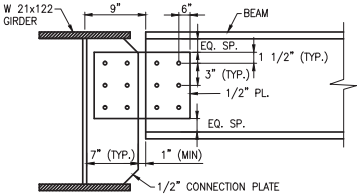

SECTION B-B

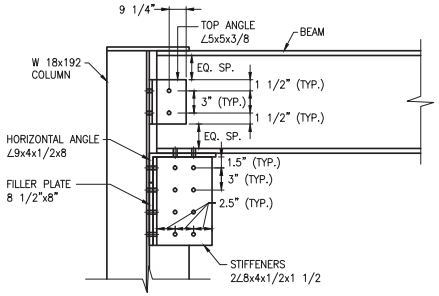

SECTION C-C

NOTES:

1. CONNECTIONS SHALL BE MADE ACCORDING TO THE NEW YORK STATE STEEL CONSTRUCTION MANUAL. SEE STRUCTURAL STEEL NOTES ON DWG. NO. GN-1 FOR DETAILS.
2. UNLESS OTHERWISE INDICATED, BOLTED CONNECTIONS SHALL BE MADE WITH 7/8" DIA. A.S.T.M A325 HIGH-STRENGTH BOLTS.
3. BENT PLATES/ANGLES MAY BE USED IN THE CONNECTION BETWEEN SKEWED BEAMS/GIRDERS AND COLUMNS.
4. THE CONTRACTOR MAY USE SHOP WELDED BRACKETS AT THE BEAM COLUMN CONNECTIONS IN LIEU OF ANGLE/FILLER PLATE ASSEMBLY. PROVIDE SHOP DRAWINGS AND CALCULATIONS OF WELDED BRACKET CONNECTION DETAILS PREPARED BY A NEW YORK STATE LICENSED ENGINEER FOR APPROVAL.

CONTRACT NO.	CD NO. M79

TEMPORARY ACCESS ROAD
RIVERSIDE BOULEVARD
WEST 59TH STREET TO WEST 61ST STREET
BOROUGH OF MANHATTAN

STEEL DETAILS - II

DWG. NO.	SCALE	DATE	SHEET
ST-28	N.T.S.	09-15-2014	33 OF 68

The RBA Group — ENGINEERS • ARCHITECTS • PLANNERS
27 UNION SQUARE WEST
NEW YORK, NEW YORK 10003

0 1 2 3 4
ORIGINAL SIZE IN INCHES

PREPARED BY THE RBA GROUP
IN CHARGE LR DRAFTER RJF
DESIGNER WS CHECKER WS

RBA - RIVERSIDE BOULEVARD - TEMPORARY ACCESS ROAD
FILE: TAR_STEEL_DET2

BEAM NO.	L (CL TO CL)	CLEAR L	A	B (IN)	C (IN)
B-1	19' 0"	18' 4"	38	5 3/4	3/4
B-2	18' 11 7/16"	16' 11 7/16"	38	5 1/4	2
B-3	18' 11 7/16"	16' 11 7/16"	38	5 1/4	2
B-4	19' 0"	18' 4"	41	5 1/4	2 3/8
B-5	18' 11 7/16"	16' 11 7/16"	38	5 1/4	2
B-6	18' 11 7/16"	16' 11 7/16"	38	5 1/4	2
B-7	19' 0"	18' 4"	41	5 1/4	2 3/8
B-8	18' 11 7/16"	16' 11 7/16"	38	5 1/4	2
B-9	18' 11 7/16"	16' 11 7/16"	38	5 1/4	2
B-10	19' 0"	18' 4"	41	5 1/4	2 3/8
B-11	18' 11 15/16"	16' 11 15/16"	38	5 1/4	2 2/9
B-12	18' 11 15/16"	16' 11 15/16"	38	5 1/4	2 2/9
B-13	18' 11 15/16"	18' 3 15/16"	38	5 3/4	5/7
B-14	27' 7 5/8"	27' 3 5/8"	65	5	1 1/3
B-15	23' 5 3/4"	22' 5 3/4"	53	5	2 3/8
B-16	19' 4 3/4"	19' 0 3/4"	43	5 1/4	1 1/2
B-17	16' 5 3/8"	15' 5 3/8"	29	6 1/4	2
B-18	12' 4 7/8"	12' 0 7/8"	22	6 1/4	3 2/3
B-19	12' 3 13/16"	11' 3 13/16"	21	6 1/4	2 2/7
B-20	12' 3 7/16"	11' 3 7/16"	21	6 1/4	2
B-21	12' 3 3/4"	11' 11 3/4"	22	6 1/4	3 1/8
B-22	12' 4 15/16"	11' 4 15/16"	21	6 1/4	2 5/6
B-23	12' 6 13/16"	11' 6 13/16"	21	6 1/4	3 7/9
B-24	12' 9 7/16"	12' 5 7/16"	23	6 1/4	2 5/6
B-25	13' 0 13/16"	12' 0 13/16"	22	6 1/4	3 2/3
B-26	13' 4 15/16"	12' 4 15/16"	23	6 1/4	2 3/5
B-27	13' 9 7/8"	13' 5 7/8"	25	6 1/4	2 4/5
B-28	14' 3 1/2"	13' 3 1/2"	25	6 1/4	1 5/8
B-29	14' 9 7/8"	13' 9 7/8"	26	6 1/4	1 2/3
B-30	15' 4 7/8"	15' 0 7/8"	28	6 1/4	3
B-31	15' 11 15/16"	14' 11 15/16"	28	6 1/4	2 1/2
B-32	16' 7"	15' 7"	29	6 1/4	2 7/8
B-33	17' 2 1/16"	16' 10 1/16"	38	5 1/4	1 2/7
B-34	17' 9 1/8"	16' 9 1/8"	37	5 1/4	3 4/9
B-35	18' 2 11/16"	17' 2 11/16"	38	5 1/4	3 3/5
B-36	18' 5 13/16"	18' 1 13/16"	31	6 1/4	2 2/7

A: TOTAL # OF STUD SPACING ALONG GIRDER
B: STUD SPACING
C: DIST FROM FIRST/LAST STUD TO CL OF BRG/CONN BASED ON CLEAR L.

CLEAR L:
FOR BEAMS B1, B4, B7, B10 B13 = L-8"
FOR BEAMS B2,B3,B5,B6,B8,B9,B11,B12 = L - 24"
FOR BEAMS B14, B16, B18, B21, B24, B27, B30,B33, B36 = L-4"
FOR BEAMS B15, B17, B19, B20, B22, B23, B25, B26, B28, B29, B31, B32, B34, B35 = L-12"

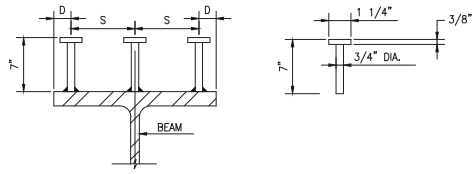

SHEAR STUD DETAIL

BEAM	D	S
W 14X61	2"	3"
W 14X120	2"	5 5/16"

STUD TABLE

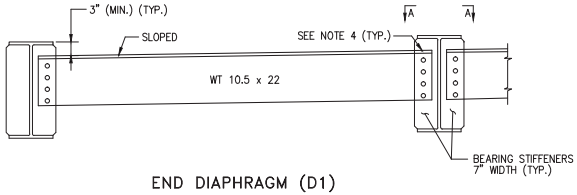

END DIAPHRAGM (D1)

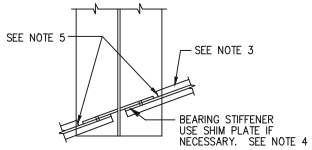

SECTION A–A

NOTES:

1. THE CONTRACTOR MAY PLACE DIAPHRAGMS ON EITHER SIDE OF THE BEARING STIFFENERS OR CONNECTION PLATES AS NECESSARY TO CORRECT ALIGNMENT PROVIDED THERE WILL BE NO INTERFERENCE WITH OTHER STRUCTURAL DETAILS.
2. UNLESS COPING THE DIAPHRAGM MEMBER IS REQUIRED BY GEOMETRY, THE FABRICATOR SHALL BLOCK ITS FLANGE AND CHIP/GRIND FILLET FLUSH.
3. TAPERED OR FLAT SHIM PLATES MAY BE USED IN THE CONNECTION BETWEEN SKEWED DIAPHRAGMS AND THE BEARING STIFFENERS, STIFFENER CONNECTION PLATES OR GUSSET PLATES. VARIABLE THICKNESSES OF SHIM PLATES MAY BE USED. THE MINIMUM THICKNESS OF SHIM PLATE SHALL BE 1/8" (3 mm) WITH A MAXIMUM NUMBER OF THREE SHIM PLATES PERMITTED AT ANY CONNECTION. THE TOTAL THICKNESS OF ALL SHIM PLATES USED AT ANY CONNECTION SHALL NOT EXCEED 1" (25 mm). SHIM PLATES SHALL HAVE THE DIMENSIONS OF THE FAYING SURFACE. THE SHIM MATERIAL SHALL CONFORM TO ASTM DESIGNATION A588M. NO ADDITIONAL PAYMENT SHALL BE MADE FOR FURNISHING AND PLACING THE SHIM PLATES.
4. IN LIEU OF COPING THE DIAPHRAGM MEMBER, THE FABRICATOR SHALL HAVE THE OPTION OF CUTTING ITS FLANGE BACK ON ONE SIDE, CHIPPING AND GRINDING FILLET FLUSH.
5. ALL BOLT HEADS SHALL BE PLACED ON THE TOP SIDE OF CONNECTIONS UNLESS OTHERWISE NOTED.

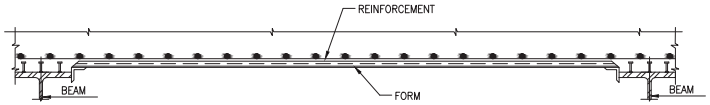

TYPICAL LONGITUDINAL SECTION

CONTRACT NO. | CD NO. M79

TEMPORARY ACCESS ROAD
RIVERSIDE BOULEVARD
WEST 59TH STREET TO WEST 61ST STREET
BOROUGH OF MANHATTAN

STEEL DETAILS - III

DWG. NO.	SCALE	DATE	SHEET
ST-29	N.T.S.	09-15-2014	34 OF 68

The RBA Group — ENGINEERS • ARCHITECTS • PLANNERS
27 UNION SQUARE WEST
NEW YORK, NEW YORK 10003

0 1 2 3 4
ORIGINAL SIZE IN INCHES

PREPARED BY THE RBA GROUP
IN CHARGE LR | DRAFTER RJF
DESIGNER WS | CHECKER WS

RBA - RIVERSIDE BOULEVARD - TEMPORARY ACCESS ROAD
FILE: TAR_STEEL_DET3

TEMPORARY ACCESS RAMP							
MOMENT & SHEAR TABLE			CL OF COLUMN	0.25 L1	0.5 L1	0.75 L1	CL OF SUPPORT / BRGS. ABUT.
B-1	DL	MOMENT	0.0	20.8	41.6	20.8	0.0
		SHEAR	8.7	4.4	0.0	4.4	8.7
	SIDL	MOMENT	0.0	13.4	26.8	13.4	0.0
		SHEAR	5.6	2.8	0.0	2.8	5.6
	LL(+)	MOMENT	0.0	120.3	240.5	120.3	0.0
		SHEAR	60.2	30.1	0.0	30.1	60.2
B-2	DL	MOMENT	0.0	25.5	51.1	25.5	0.0
		SHEAR	10.8	5.4	0.0	5.4	10.8
	SIDL	MOMENT	0.0	16.9	33.8	16.9	0.0
		SHEAR	7.1	3.6	0.0	3.6	7.1
	LL(+)	MOMENT	0.0	119.8	239.6	119.8	0.0
		SHEAR	60.1	30.1	0.0	30.1	60.1
B-3	DL	MOMENT	0.0	25.5	51.1	25.5	0.0
		SHEAR	10.8	5.4	0.0	5.4	10.8
	SIDL	MOMENT	0.0	16.9	33.8	16.9	0.0
		SHEAR	7.1	3.6	0.0	3.6	7.1
	LL(+)	MOMENT	0.0	119.8	239.6	119.8	0.0
		SHEAR	60.1	30.1	0.0	30.1	60.1
B-4	DL	MOMENT	0.0	24.7	49.4	24.7	0.0
		SHEAR	10.4	5.2	0.0	5.2	10.4
	SIDL	MOMENT	0.0	16.2	32.5	16.2	0.0
		SHEAR	6.9	3.4	0.0	3.4	6.9
	LL(+)	MOMENT	0.0	120.3	240.5	120.3	0.0
		SHEAR	60.2	30.1	0.0	30.1	60.2
B-5	DL	MOMENT	0.0	25.5	51.1	25.5	0.0
		SHEAR	10.8	5.4	0.0	5.4	10.8
	SIDL	MOMENT	0.0	16.9	33.8	16.9	0.0
		SHEAR	7.1	3.6	0.0	3.6	7.1
	LL(+)	MOMENT	0.0	119.8	239.6	119.8	0.0
		SHEAR	60.1	30.1	0.0	30.1	60.1
B-6	DL	MOMENT	0.0	25.5	51.1	25.5	0.0
		SHEAR	10.8	5.4	0.0	5.4	10.8
	SIDL	MOMENT	0.0	16.9	33.8	16.9	0.0
		SHEAR	7.1	3.6	0.0	3.6	7.1
	LL(+)	MOMENT	0.0	119.8	239.6	119.8	0.0
		SHEAR	60.1	30.1	0.0	30.1	60.1
B-7	DL	MOMENT	0.0	24.7	49.4	24.7	0.0
		SHEAR	10.4	5.2	0.0	5.2	10.4
	SIDL	MOMENT	0.0	16.2	32.4	16.2	0.0
		SHEAR	6.9	3.4	0.0	3.4	6.9
	LL(+)	MOMENT	0.0	120.3	240.5	120.3	0.0
		SHEAR	60.2	30.1	0.0	30.1	60.2
B-8	DL	MOMENT	0.0	25.5	51.0	25.5	0.0
		SHEAR	10.8	5.4	0.0	5.4	10.8
	SIDL	MOMENT	0.0	16.9	33.7	16.9	0.0
		SHEAR	7.1	3.6	0.0	3.6	7.1
	LL(+)	MOMENT	0.0	119.8	239.6	119.8	0.0
		SHEAR	60.1	30.1	0.0	30.1	60.1

TEMPORARY ACCESS RAMP							
MOMENT & SHEAR TABLE			CL OF COLUMN	0.25 L1	0.5 L1	0.75 L1	CL OF SUPPORT / BRGS. ABUT.
B-9	DL	MOMENT	0.0	25.5	51.1	25.5	0.0
		SHEAR	10.8	5.4	0.0	5.4	10.8
	SIDL	MOMENT	0.0	16.9	33.8	16.9	0.0
		SHEAR	7.1	3.6	0.0	3.6	7.1
	LL(+)	MOMENT	0.0	119.8	239.6	119.8	0.0
		SHEAR	60.1	30.1	0.0	30.1	60.1
B-10	DL	MOMENT	0.0	25.3	50.6	25.3	0.0
		SHEAR	10.7	5.3	0.0	5.3	10.7
	SIDL	MOMENT	0.0	16.7	33.3	16.7	0.0
		SHEAR	7.0	3.5	0.0	3.5	7.0
	LL(+)	MOMENT	0.0	120.3	240.5	120.3	0.0
		SHEAR	60.2	30.1	0.0	30.1	60.2
B-11	DL	MOMENT	0.0	26.2	52.5	26.2	0.0
		SHEAR	11.1	5.5	0.0	5.5	11.1
	SIDL	MOMENT	0.0	17.4	34.7	17.4	0.0
		SHEAR	7.3	3.7	0.0	3.7	7.3
	LL(+)	MOMENT	0.0	120.2	240.4	120.2	0.0
		SHEAR	60.2	30.1	0.0	30.1	60.2
B-12	DL	MOMENT	0.0	26.6	53.2	26.6	0.0
		SHEAR	11.2	5.6	0.0	5.6	11.2
	SIDL	MOMENT	0.0	17.6	35.2	17.6	0.0
		SHEAR	7.4	3.7	0.0	3.7	7.4
	LL(+)	MOMENT	0.0	120.2	240.4	120.2	0.0
		SHEAR	60.2	30.1	0.0	30.1	60.2
B-13	DL	MOMENT	0.0	21.7	43.4	21.7	0.0
		SHEAR	9.1	4.6	0.0	4.6	9.1
	SIDL	MOMENT	0.0	14.1	28.2	14.1	0.0
		SHEAR	5.9	3.0	0.0	3.0	5.9
	LL(+)	MOMENT	0.0	120.2	240.4	120.2	0.0
		SHEAR	60.2	30.1	0.0	30.1	60.2

NOTES:

1. ALL LIVE LOAD MOMENTS AND SHEARS INCLUDE IMPACT.
2. MOMENTS ARE EXPRESSED IN KIP–FT.
3. SHEARS ARE EXPRESSED IN KIPS.
4. MOMENTS AND SHEARS ARE UNFACTORED.

DESIGN LOAD TABLE - TEMPORARY ACCESS RAMP SECTION 2														
	UNIT	LOAD (KIP / FT)												
		B-1	B-2	B-3	B-4	B-5	B-6	B-7	B-8	B-9	B-10	B-11	B-12	B-13
DL	SLAB	0.753	0.951	0.951	0.913	0.951	0.951	0.911	0.950	0.951	0.937	0.975	0.999	0.791
	HAUNCH	0.031	0.031	0.031	0.031	0.031	0.031	0.031	0.031	0.031	0.031	0.031	0.031	0.031
	GIRDER	0.065	0.065	0.065	0.065	0.065	0.065	0.065	0.065	0.065	0.065	0.065	0.065	0.065
	S.I.P. FORMS	0.071	0.091	0.091	0.087	0.091	0.091	0.087	0.091	0.091	0.089	0.093	0.094	0.075
	TOTAL	0.920	1.138	1.137	1.095	1.138	1.137	1.094	1.136	1.137	1.122	1.164	1.179	0.962
SDL	WALKWAY	0.117	0.148	0.148	0.142	0.148	0.148	0.141	0.148	0.148	0.145	0.151	0.153	0.123
	BARRIER	0.351	0.444	0.444	0.425	0.444	0.444	0.424	0.443	0.444	0.436	0.454	0.460	0.368
	FUTURE W.S.	0.127	0.160	0.160	0.154	0.160	0.160	0.153	0.160	0.160	0.158	0.164	0.167	0.133
	TOTAL	0.594	0.752	0.752	0.720	0.752	0.752	0.719	0.751	0.752	0.739	0.769	0.780	0.624

The RBA Group
ENGINEERS • ARCHITECTS • PLANNERS
27 UNION SQUARE WEST
NEW YORK, NEW YORK 10003

0 1 2 3 4
ORIGINAL SIZE IN INCHES

PREPARED BY: THE RBA GROUP
IN CHARGE: LR
DRAFTER: RJF
DESIGNER: WS
CHECKER: WS

CONTRACT NO.
CD NO. M79

TEMPORARY ACCESS ROAD
RIVERSIDE BOULEVARD
WEST 59TH STREET TO WEST 61ST STREET
BOROUGH OF MANHATTAN

MOMENT AND SHEAR TABLE
DESIGN LOAD TABLE - SECTION 2

DWG. NO.	SCALE	DATE	SHEET
ST-30	N.T.S.	09-15-2014	35 OF 68

RBA - RIVERSIDE BOULEVARD - TEMPORARY ACCESS ROAD
FILE: TAR_TBL1 (MO&SHR)

TEMPORARY ACCESS RAMP

MOMENT & SHEAR TABLE			CL OF COLUMN	0.25 L1	0.5 L1	0.75 L1	CL OF SUPPORT / BRGS ABUT.
B-14	DL	MOMENT	0.0	46.3	92.6	46.3	0.0
		SHEAR	13.4	6.7	0.0	6.7	13.4
	SDL	MOMENT	0.0	21.1	42.2	21.1	0.0
		SHEAR	6.1	3.1	0.0	3.1	6.1
	LL(+)	MOMENT	0.0	229.3	458.5	229.3	0.0
		SHEAR	73.9	36.9	0.0	36.9	73.9
B-15	DL	MOMENT	0.0	39.1	78.1	39.1	0.0
		SHEAR	13.3	6.7	0.0	6.7	13.3
	SDL	MOMENT	0.0	20.6	41.2	20.6	0.0
		SHEAR	7.0	3.5	0.0	3.5	7.0
	LL(+)	MOMENT	0.0	175.2	350.5	175.2	0.0
		SHEAR	68.6	34.3	0.0	34.3	68.6
B-16	DL	MOMENT	0.0	25.8	51.6	25.8	0.0
		SHEAR	10.6	5.3	0.0	5.3	10.6
	SDL	MOMENT	0.0	16.7	33.4	16.7	0.0
		SHEAR	6.9	3.4	0.0	3.4	6.9
	LL(+)	MOMENT	0.0	124.1	248.2	124.1	0.0
		SHEAR	61.1	30.6	0.0	30.6	61.1
B-17	DL	MOMENT	0.0	23.3	46.6	23.3	0.0
		SHEAR	11.3	5.7	0.0	5.7	11.3
	SDL	MOMENT	0.0	17.5	35.0	17.5	0.0
		SHEAR	8.5	4.3	0.0	4.3	8.5
	LL(+)	MOMENT	0.0	95.4	190.7	95.4	0.0
		SHEAR	52.7	26.4	0.0	26.4	52.7
B-18	DL	MOMENT	0.0	13.5	27.0	13.5	0.0
		SHEAR	8.7	4.3	0.0	4.3	8.7
	SDL	MOMENT	0.0	12.8	25.6	12.8	0.0
		SHEAR	8.3	4.1	0.0	4.1	8.3
	LL(+)	MOMENT	0.0	54.6	109.3	54.6	0.0
		SHEAR	44.5	22.2	0.0	22.2	44.5
B-19	DL	MOMENT	0.0	11.1	22.2	11.1	0.0
		SHEAR	7.2	3.6	0.0	3.6	7.2
	SDL	MOMENT	0.0	10.5	21.0	10.5	0.0
		SHEAR	6.8	3.4	0.0	3.4	6.8
	LL(+)	MOMENT	0.0	54.1	108.1	54.1	0.0
		SHEAR	44.2	22.1	0.0	22.1	44.2
B-20	DL	MOMENT	0.0	11.1	22.1	11.1	0.0
		SHEAR	7.2	3.6	0.0	3.6	7.2
	SDL	MOMENT	0.0	10.5	20.9	10.5	0.0
		SHEAR	6.8	3.4	0.0	3.4	6.8
	LL(+)	MOMENT	0.0	53.9	107.7	53.9	0.0
		SHEAR	44.1	22.1	0.0	22.1	44.1
B-21	DL	MOMENT	0.0	11.1	22.2	11.1	0.0
		SHEAR	7.2	3.6	0.0	3.6	7.2
	SDL	MOMENT	0.0	10.5	21.0	10.5	0.0
		SHEAR	6.8	3.4	0.0	3.4	6.8
	LL(+)	MOMENT	0.0	54.0	108.1	54.0	0.0
		SHEAR	44.2	22.1	0.0	22.1	44.2

TEMPORARY ACCESS RAMP

MOMENT & SHEAR TABLE			CL OF COLUMN	0.25 L1	0.5 L1	0.75 L1	CL OF SUPPORT / BRGS ABUT.
B-22	DL	MOMENT	0.0	11.3	22.6	11.3	0.0
		SHEAR	7.3	3.6	0.0	3.6	7.3
	SDL	MOMENT	0.0	10.6	21.2	10.6	0.0
		SHEAR	6.8	3.4	0.0	3.4	6.8
	LL(+)	MOMENT	0.0	54.7	109.3	54.7	0.0
		SHEAR	37.0	18.5	0.0	18.5	37.0
B-23	DL	MOMENT	0.0	11.6	23.2	11.6	0.0
		SHEAR	7.4	3.7	0.0	3.7	7.4
	SDL	MOMENT	0.0	10.7	21.5	10.7	0.0
		SHEAR	6.8	3.4	0.0	3.4	6.8
	LL(+)	MOMENT	0.0	55.7	111.4	55.7	0.0
		SHEAR	44.9	22.4	0.0	22.4	44.9
B-24	DL	MOMENT	0.0	12.0	24.0	12.0	0.0
		SHEAR	7.5	3.7	0.0	3.7	7.5
	SDL	MOMENT	0.0	11.0	21.9	11.0	0.0
		SHEAR	6.9	3.4	0.0	3.4	6.9
	LL(+)	MOMENT	0.0	57.1	114.2	57.1	0.0
		SHEAR	45.5	22.7	0.0	22.7	45.5
B-25	DL	MOMENT	0.0	12.5	25.0	12.5	0.0
		SHEAR	7.7	3.8	0.0	3.8	7.7
	SDL	MOMENT	0.0	11.2	22.5	11.2	0.0
		SHEAR	6.9	3.4	0.0	3.4	6.9
	LL(+)	MOMENT	0.0	62.4	124.8	62.4	0.0
		SHEAR	46.2	23.1	0.0	23.1	46.2
B-26	DL	MOMENT	0.0	13.2	26.4	13.2	0.0
		SHEAR	7.9	3.9	0.0	3.9	7.9
	SDL	MOMENT	0.0	11.6	23.1	11.6	0.0
		SHEAR	6.9	3.5	0.0	3.5	6.9
	LL(+)	MOMENT	0.0	65.8	131.5	65.8	0.0
		SHEAR	47.0	23.5	0.0	23.5	47.0
B-27	DL	MOMENT	0.0	14.0	28.0	14.0	0.0
		SHEAR	8.1	4.0	0.0	4.0	8.1
	SDL	MOMENT	0.0	12.0	24.0	12.0	0.0
		SHEAR	6.9	3.5	0.0	3.5	6.9
	LL(+)	MOMENT	0.0	69.8	139.5	69.8	0.0
		SHEAR	47.9	24.0	0.0	24.0	47.9
B-28	DL	MOMENT	0.0	14.9	29.9	14.9	0.0
		SHEAR	8.4	4.2	0.0	4.2	8.4
	SDL	MOMENT	0.0	12.4	24.9	12.4	0.0
		SHEAR	7.0	3.5	0.0	3.5	7.0
	LL(+)	MOMENT	0.0	74.3	148.7	74.3	0.0
		SHEAR	48.9	24.4	0.0	24.4	48.9
B-29	DL	MOMENT	0.0	16.1	32.2	16.1	0.0
		SHEAR	8.7	4.3	0.0	4.3	8.7
	SDL	MOMENT	0.0	13.0	26.0	13.0	0.0
		SHEAR	7.0	3.5	0.0	3.5	7.0
	LL(+)	MOMENT	0.0	79.5	159.0	79.5	0.0
		SHEAR	49.9	25.0	0.0	25.0	49.9

TEMPORARY ACCESS RAMP

MOMENT & SHEAR TABLE			CL OF COLUMN	0.25 L1	0.5 L1	0.75 L1	CL OF SUPPORT / BRGS ABUT.
B-30	DL	MOMENT	0.0	17.4	34.9	17.4	0.0
		SHEAR	9.1	4.5	0.0	4.5	9.1
	SDL	MOMENT	0.0	13.7	27.3	13.7	0.0
		SHEAR	7.1	3.5	0.0	3.5	7.1
	LL(+)	MOMENT	0.0	85.2	170.4	85.2	0.0
		SHEAR	51.0	25.5	0.0	25.5	51.0
B-31	DL	MOMENT	0.0	18.8	37.7	18.8	0.0
		SHEAR	9.4	4.7	0.0	4.7	9.4
	SDL	MOMENT	0.0	14.3	28.6	14.3	0.0
		SHEAR	7.2	3.6	0.0	3.6	7.2
	LL(+)	MOMENT	0.0	90.9	181.8	90.9	0.0
		SHEAR	52.0	26.0	0.0	26.0	52.0
B-32	DL	MOMENT	0.0	20.2	40.5	20.2	0.0
		SHEAR	9.8	4.9	0.0	4.9	9.8
	SDL	MOMENT	0.0	14.9	29.8	14.9	0.0
		SHEAR	7.2	3.6	0.0	3.6	7.2
	LL(+)	MOMENT	0.0	96.7	193.4	96.7	0.0
		SHEAR	52.9	26.5	0.0	26.5	52.9
B-33	DL	MOMENT	0.0	21.7	43.4	21.7	0.0
		SHEAR	10.1	5.1	0.0	5.1	10.1
	SDL	MOMENT	0.0	15.6	31.1	15.6	0.0
		SHEAR	7.2	3.6	0.0	3.6	7.2
	LL(+)	MOMENT	0.0	102.4	204.8	102.4	0.0
		SHEAR	55.5	27.8	0.0	27.8	55.5
B-34	DL	MOMENT	0.0	20.9	41.8	20.9	0.0
		SHEAR	9.4	4.7	0.0	4.7	9.4
	SDL	MOMENT	0.0	14.5	28.9	14.5	0.0
		SHEAR	6.5	3.3	0.0	3.3	6.5
	LL(+)	MOMENT	0.0	108.2	216.3	108.2	0.0
		SHEAR	57.2	28.6	0.0	28.6	57.2
B-35	DL	MOMENT	0.0	24.4	48.9	24.4	0.0
		SHEAR	10.7	5.4	0.0	5.4	10.7
	SDL	MOMENT	0.0	16.7	33.4	16.7	0.0
		SHEAR	7.3	3.7	0.0	3.7	7.3
	LL(+)	MOMENT	0.0	112.7	225.4	112.7	0.0
		SHEAR	58.3	29.2	0.0	29.2	58.3
B-36	DL	MOMENT	0.0	23.0	46.0	23.0	0.0
		SHEAR	10.0	5.0	0.0	5.0	10.0
	SDL	MOMENT	0.0	15.4	30.9	15.4	0.0
		SHEAR	6.7	3.3	0.0	3.3	6.7
	LL(+)	MOMENT	0.0	115.2	230.4	115.2	0.0
		SHEAR	59.0	29.5	0.0	29.5	59.0

NOTES:

1. ALL LIVE LOAD MOMENTS AND SHEARS INCLUDE IMPACT.
2. MOMENTS ARE EXPRESSED IN KIP-FT.
3. SHEARS ARE EXPRESSED IN KIPS.
4. MOMENTS AND SHEARS ARE UNFACTORED.

DESIGN LOAD TABLE - TEMPORARY ACCESS RAMP SECTION 3 - SB RAMP RIVERSIDE BLVD. STA. 3+96.54 TO RIVERSIDE BLVD. STA. 14+63.91

	UNIT	LOAD (KIP / FT)																								
		B-14	B-15	B-16	B-17	B-18	B-19	B-20	B-21	B-22	B-23	B-24	B-25	B-26	B-27	B-28	B-29	B-30	B-31	B-32	B-33	B-34	B-35	B-36
DL	SLAB	0.742	0.891	0.914	1.169	1.192	0.983	0.983	0.983	0.983	0.983	0.983	0.983	0.982	0.982	0.981	0.983	0.986	0.987	0.987	0.987	0.981	0.987	0.897
	HAUNCH	0.031	0.031	0.031	0.031	0.031	0.031	0.031	0.031	0.031	0.031	0.031	0.031	0.031	0.031	0.031	0.031	0.031	0.031	0.031	0.031	0.031	0.031	0.031
	GIRDER	0.127	0.127	0.065	0.065	0.065	0.065	0.065	0.065	0.065	0.065	0.065	0.065	0.065	0.065	0.065	0.065	0.065	0.065	0.065	0.065	0.065	0.065	0.065
	STP FORMS	0.070	0.085	0.087	0.112	0.115	0.094	0.094	0.094	0.094	0.094	0.094	0.094	0.094	0.094	0.094	0.094	0.094	0.094	0.094	0.094	0.094	0.094	0.085
	TOTAL	0.970	1.134	1.097	1.377	1.402	1.173	1.173	1.173	1.173	1.173	1.173	1.172	1.172	1.171	1.171	1.172	1.176	1.178	1.177	1.177	1.060	1.177	1.078
SDL	WALKWAY	0.079	0.112	0.139	0.209	0.283	0.235	0.236	0.236	0.234	0.231	0.227	0.223	0.216	0.209	0.202	0.195	0.189	0.182	0.175	0.169	0.146	0.160	0.143
	BARRIER	0.277	0.335	0.417	0.628	0.849	0.706	0.708	0.706	0.701	0.692	0.680	0.668	0.648	0.628	0.607	0.586	0.566	0.546	0.526	0.508	0.438	0.479	0.429
	FUTURE W.S.	0.125	0.150	0.154	0.197	0.201	0.166	0.166	0.166	0.166	0.166	0.166	0.166	0.165	0.166	0.165	0.166	0.166	0.166	0.166	0.166	0.148	0.166	0.151
	TOTAL	0.442	0.597	0.710	1.034	1.333	1.107	1.109	1.107	1.100	1.088	1.072	1.057	1.029	1.003	0.975	0.947	0.921	0.894	0.868	0.844	0.733	0.805	0.723

The RBA Group — ENGINEERS • ARCHITECTS • PLANNERS
27 UNION SQUARE WEST
NEW YORK, NEW YORK 10003

0 1 2 3 4
ORIGINAL SIZE IN INCHES

PREPARED BY: THE RBA GROUP
IN CHARGE: LR
DRAFTER: RJF
DESIGNER: WS
CHECKER: WS

CONTRACT NO.
CD NO. M79

TEMPORARY ACCESS ROAD
RIVERSIDE BOULEVARD
WEST 59TH STREET TO WEST 61ST STREET
BOROUGH OF MANHATTAN

MOMENT AND SHEAR TABLE
DESIGN LOAD TABLE - SECTION 3

DWG. NO.	SCALE	DATE	SHEET
ST-31	N.T.S.	09-15-2014	36 OF 68

RBA - RIVERSIDE BOULEVARD - TEMPORARY ACCESS ROAD
FILE: TAR_TBL1 (MO&SHR)

TEMPORARY ACCESS RAMP

CAMBER TABLE		CL OF COLUMN	0.25 L1	0.5 L1	0.75 L1	CL OF SUPPORT /BRGS. ABUT
B-1	I STEEL DL	0.000	0.067	0.010	0.007	0.000
	II CONCRETE DL	0.000	0.096	0.135	0.096	0.000
	III SUPERIMPOSED DL	0.000	0.008	0.011	0.008	0.000
	IV VERTICAL CURVE	0.000	0.000	0.000	0.000	0.000
	TOTAL = I+II+III+IV	0.000	0.111	0.156	0.111	0.000
B-2	I STEEL DL	0.000	0.067	0.010	0.007	0.000
	II CONCRETE DL	0.000	0.120	0.168	0.120	0.000
	III SUPERIMPOSED DL	0.000	0.010	0.014	0.010	0.000
	IV VERTICAL CURVE	0.000	0.000	0.000	0.000	0.000
	TOTAL = I+II+III+IV	0.000	0.137	0.192	0.137	0.000
B-3	I STEEL DL	0.000	0.067	0.010	0.007	0.000
	II CONCRETE DL	0.000	0.120	0.168	0.120	0.000
	III SUPERIMPOSED DL	0.000	0.010	0.014	0.010	0.000
	IV VERTICAL CURVE	0.000	0.000	0.000	0.000	0.000
	TOTAL = I+II+III+IV	0.000	0.137	0.192	0.137	0.000
B-4	I STEEL DL	0.000	0.067	0.010	0.007	0.000
	II CONCRETE DL	0.000	0.116	0.163	0.116	0.000
	III SUPERIMPOSED DL	0.000	0.010	0.013	0.010	0.000
	IV VERTICAL CURVE	0.000	0.000	0.000	0.000	0.000
	TOTAL = I+II+III+IV	0.000	0.133	0.186	0.133	0.000
B-5	I STEEL DL	0.000	0.067	0.010	0.007	0.000
	II CONCRETE DL	0.000	0.120	0.168	0.120	0.000
	III SUPERIMPOSED DL	0.000	0.010	0.014	0.010	0.000
	IV VERTICAL CURVE	0.000	0.000	0.000	0.000	0.000
	TOTAL = I+II+III+IV	0.000	0.137	0.192	0.137	0.000
B-6	I STEEL DL	0.000	0.067	0.010	0.007	0.000
	II CONCRETE DL	0.000	0.120	0.168	0.120	0.000
	III SUPERIMPOSED DL	0.000	0.010	0.014	0.010	0.000
	IV VERTICAL CURVE	0.000	0.000	0.000	0.000	0.000
	TOTAL = I+II+III+IV	0.000	0.137	0.192	0.137	0.000
B-7	I STEEL DL	0.000	0.067	0.010	0.007	0.000
	II CONCRETE DL	0.000	0.116	0.163	0.116	0.000
	III SUPERIMPOSED DL	0.000	0.009	0.013	0.009	0.000
	IV VERTICAL CURVE	0.000	0.000	0.000	0.000	0.000
	TOTAL = I+II+III+IV	0.000	0.133	0.186	0.133	0.000
B-8	I STEEL DL	0.000	0.067	0.010	0.007	0.000
	II CONCRETE DL	0.000	0.119	0.166	0.119	0.000
	III SUPERIMPOSED DL	0.000	0.010	0.014	0.010	0.000
	IV VERTICAL CURVE	0.000	0.000	0.000	0.000	0.000
	TOTAL = I+II+III+IV	0.000	0.136	0.192	0.136	0.000
B-9	I STEEL DL	0.000	0.067	0.010	0.007	0.000
	II CONCRETE DL	0.000	0.120	0.168	0.120	0.000
	III SUPERIMPOSED DL	0.000	0.010	0.014	0.010	0.000
	IV VERTICAL CURVE	0.000	0.000	0.000	0.000	0.000
	TOTAL = I+II+III+IV	0.000	0.137	0.192	0.137	0.000
B-10	I STEEL DL	0.000	0.067	0.010	0.007	0.000
	II CONCRETE DL	0.000	0.119	0.167	0.119	0.000
	III SUPERIMPOSED DL	0.000	0.012	0.014	0.010	0.000
	IV VERTICAL CURVE	0.000	0.000	0.000	0.000	0.000
	TOTAL = I+II+III+IV	0.000	0.136	0.191	0.136	0.000
B-11	I STEEL DL	0.000	0.067	0.010	0.007	0.000
	II CONCRETE DL	0.000	0.124	0.173	0.124	0.000
	III SUPERIMPOSED DL	0.000	0.010	0.014	0.010	0.000
	IV VERTICAL CURVE	0.000	0.000	0.000	0.000	0.000
	TOTAL = I+II+III+IV	0.000	0.141	0.198	0.141	0.000
B-12	I STEEL DL	0.000	0.067	0.010	0.007	0.000
	II CONCRETE DL	0.000	0.125	0.176	0.125	0.000
	III SUPERIMPOSED DL	0.000	0.010	0.014	0.010	0.000
	IV VERTICAL CURVE	0.000	0.000	0.000	0.000	0.000
	TOTAL = I+II+III+IV	0.000	0.143	0.200	0.143	0.000
B-13	I STEEL DL	0.000	0.067	0.010	0.007	0.000
	II CONCRETE DL	0.000	0.101	0.142	0.101	0.000
	III SUPERIMPOSED DL	0.000	0.008	0.012	0.008	0.000
	IV VERTICAL CURVE	0.000	0.000	0.000	0.000	0.000
	TOTAL = I+II+III+IV	0.000	0.116	0.163	0.116	0.000
B-14	I STEEL DL	0.000	0.070	0.042	0.030	0.000
	II CONCRETE DL	0.000	0.157	0.227	0.157	0.000
	III SUPERIMPOSED DL	0.000	0.063	0.075	0.063	0.000
	IV VERTICAL CURVE	0.000	0.000	0.000	0.000	0.000
	TOTAL = I+II+III+IV	0.000	0.289	0.353	0.250	0.000
B-15	I STEEL DL	0.000	0.015	0.022	0.015	0.000
	II CONCRETE DL	0.000	0.122	0.172	0.122	0.000
	III SUPERIMPOSED DL	0.000	0.025	0.035	0.025	0.000
	IV VERTICAL CURVE	0.000	0.000	0.000	0.000	0.000
	TOTAL = I+II+III+IV	0.000	0.163	0.229	0.163	0.000

TEMPORARY ACCESS RAMP

CAMBER TABLE		CL OF COLUMN	0.25 L1	0.5 L1	0.75 L1	CL OF SUPPORT /BRGS. ABUT
B-16	I STEEL DL	0.000	0.008	0.011	0.008	0.000
	II CONCRETE DL	0.000	0.126	0.177	0.126	0.000
	III SUPERIMPOSED DL	0.000	0.024	0.034	0.024	0.000
	IV VERTICAL CURVE	0.000	0.000	0.000	0.000	0.000
	TOTAL = I+II+III+IV	0.000	0.158	0.222	0.158	0.000
B-17	I STEEL DL	0.000	0.004	0.006	0.004	0.000
	II CONCRETE DL	0.000	0.083	0.116	0.083	0.000
	III SUPERIMPOSED DL	0.000	0.018	0.025	0.018	0.000
	IV VERTICAL CURVE	0.000	0.000	0.000	0.000	0.000
	TOTAL = I+II+III+IV	0.000	0.105	0.147	0.105	0.000
B-18	I STEEL DL	0.000	0.001	0.002	0.001	0.000
	II CONCRETE DL	0.000	0.027	0.038	0.027	0.000
	III SUPERIMPOSED DL	0.000	0.008	0.011	0.008	0.000
	IV VERTICAL CURVE	0.000	0.000	0.000	0.000	0.000
	TOTAL = I+II+III+IV	0.000	0.037	0.052	0.037	0.000
B-19	I STEEL DL	0.000	0.001	0.002	0.001	0.000
	II CONCRETE DL	0.000	0.022	0.031	0.022	0.000
	III SUPERIMPOSED DL	0.000	0.006	0.009	0.006	0.000
	IV VERTICAL CURVE	0.000	0.000	0.000	0.000	0.000
	TOTAL = I+II+III+IV	0.000	0.030	0.042	0.030	0.000
B-20	I STEEL DL	0.000	0.001	0.002	0.001	0.000
	II CONCRETE DL	0.000	0.022	0.031	0.022	0.000
	III SUPERIMPOSED DL	0.000	0.006	0.009	0.006	0.000
	IV VERTICAL CURVE	0.000	0.000	0.000	0.000	0.000
	TOTAL = I+II+III+IV	0.000	0.030	0.041	0.030	0.000
B-21	I STEEL DL	0.000	0.001	0.002	0.001	0.000
	II CONCRETE DL	0.000	0.022	0.031	0.022	0.000
	III SUPERIMPOSED DL	0.000	0.006	0.009	0.006	0.000
	IV VERTICAL CURVE	0.000	0.000	0.000	0.000	0.000
	TOTAL = I+II+III+IV	0.000	0.030	0.042	0.030	0.000
B-22	I STEEL DL	0.000	0.001	0.002	0.001	0.000
	II CONCRETE DL	0.000	0.023	0.032	0.023	0.000
	III SUPERIMPOSED DL	0.000	0.007	0.009	0.007	0.000
	IV VERTICAL CURVE	0.000	0.000	0.000	0.000	0.000
	TOTAL = I+II+III+IV	0.000	0.031	0.043	0.031	0.000
B-23	I STEEL DL	0.000	0.001	0.002	0.001	0.000
	II CONCRETE DL	0.000	0.024	0.034	0.024	0.000
	III SUPERIMPOSED DL	0.000	0.007	0.010	0.007	0.000
	IV VERTICAL CURVE	0.000	0.000	0.000	0.000	0.000
	TOTAL = I+II+III+IV	0.000	0.032	0.045	0.032	0.000
B-24	I STEEL DL	0.000	0.001	0.002	0.001	0.000
	II CONCRETE DL	0.000	0.026	0.036	0.026	0.000
	III SUPERIMPOSED DL	0.000	0.007	0.010	0.007	0.000
	IV VERTICAL CURVE	0.000	0.000	0.000	0.000	0.000
	TOTAL = I+II+III+IV	0.000	0.034	0.048	0.034	0.000
B-25	I STEEL DL	0.000	0.002	0.002	0.002	0.000
	II CONCRETE DL	0.000	0.028	0.039	0.028	0.000
	III SUPERIMPOSED DL	0.000	0.008	0.011	0.008	0.000
	IV VERTICAL CURVE	0.000	0.000	0.000	0.000	0.000
	TOTAL = I+II+III+IV	0.000	0.037	0.052	0.037	0.000

TEMPORARY ACCESS RAMP

CAMBER TABLE		CL OF COLUMN	0.25 L1	0.5 L1	0.75 L1	CL OF SUPPORT /BRGS. ABUT
B-26	I STEEL DL	0.000	0.002	0.003	0.002	0.000
	II CONCRETE DL	0.000	0.031	0.043	0.031	0.000
	III SUPERIMPOSED DL	0.000	0.008	0.012	0.008	0.000
	IV VERTICAL CURVE	0.000	0.000	0.000	0.000	0.000
	TOTAL = I+II+III+IV	0.000	0.041	0.058	0.041	0.000
B-27	I STEEL DL	0.000	0.002	0.003	0.002	0.000
	II CONCRETE DL	0.000	0.035	0.049	0.035	0.000
	III SUPERIMPOSED DL	0.000	0.009	0.013	0.009	0.000
	IV VERTICAL CURVE	0.000	0.000	0.000	0.000	0.000
	TOTAL = I+II+III+IV	0.000	0.046	0.065	0.046	0.000
B-28	I STEEL DL	0.000	0.002	0.003	0.002	0.000
	II CONCRETE DL	0.000	0.040	0.056	0.040	0.000
	III SUPERIMPOSED DL	0.000	0.010	0.014	0.010	0.000
	IV VERTICAL CURVE	0.000	0.000	0.000	0.000	0.000
	TOTAL = I+II+III+IV	0.000	0.052	0.074	0.052	0.000
B-29	I STEEL DL	0.000	0.003	0.004	0.003	0.000
	II CONCRETE DL	0.000	0.046	0.065	0.046	0.000
	III SUPERIMPOSED DL	0.000	0.012	0.016	0.012	0.000
	IV VERTICAL CURVE	0.000	0.000	0.000	0.000	0.000
	TOTAL = I+II+III+IV	0.000	0.060	0.085	0.060	0.000
B-30	I STEEL DL	0.000	0.003	0.004	0.003	0.000
	II CONCRETE DL	0.000	0.054	0.076	0.054	0.000
	III SUPERIMPOSED DL	0.000	0.013	0.018	0.013	0.000
	IV VERTICAL CURVE	0.000	0.000	0.000	0.000	0.000
	TOTAL = I+II+III+IV	0.000	0.070	0.099	0.070	0.000
B-31	I STEEL DL	0.000	0.004	0.005	0.004	0.000
	II CONCRETE DL	0.000	0.063	0.089	0.063	0.000
	III SUPERIMPOSED DL	0.000	0.015	0.021	0.015	0.000
	IV VERTICAL CURVE	0.000	0.000	0.000	0.000	0.000
	TOTAL = I+II+III+IV	0.000	0.081	0.114	0.081	0.000
B-32	I STEEL DL	0.000	0.004	0.006	0.004	0.000
	II CONCRETE DL	0.000	0.073	0.102	0.073	0.000
	III SUPERIMPOSED DL	0.000	0.017	0.023	0.017	0.000
	IV VERTICAL CURVE	0.000	0.000	0.000	0.000	0.000
	TOTAL = I+II+III+IV	0.000	0.094	0.131	0.094	0.000
B-33	I STEEL DL	0.000	0.005	0.007	0.005	0.000
	II CONCRETE DL	0.000	0.084	0.117	0.084	0.000
	III SUPERIMPOSED DL	0.000	0.017	0.025	0.017	0.000
	IV VERTICAL CURVE	0.000	0.000	0.000	0.000	0.000
	TOTAL = I+II+III+IV	0.000	0.106	0.148	0.106	0.000
B-34	I STEEL DL	0.000	0.006	0.008	0.006	0.000
	II CONCRETE DL	0.000	0.086	0.120	0.086	0.000
	III SUPERIMPOSED DL	0.000	0.017	0.024	0.017	0.000
	IV VERTICAL CURVE	0.000	0.000	0.000	0.000	0.000
	TOTAL = I+II+III+IV	0.000	0.108	0.152	0.108	0.000
B-35	I STEEL DL	0.000	0.006	0.008	0.006	0.000
	II CONCRETE DL	0.000	0.106	0.149	0.106	0.000
	III SUPERIMPOSED DL	0.000	0.021	0.030	0.021	0.000
	IV VERTICAL CURVE	0.000	0.000	0.000	0.000	0.000
	TOTAL = I+II+III+IV	0.000	0.133	0.187	0.133	0.000
B-36	I STEEL DL	0.000	0.007	0.009	0.007	0.000
	II CONCRETE DL	0.000	0.102	0.143	0.102	0.000
	III SUPERIMPOSED DL	0.000	0.034	0.048	0.034	0.000
	IV VERTICAL CURVE	0.000	0.000	0.000	0.000	0.000
	TOTAL = I+II+III+IV	0.000	0.143	0.200	0.143	0.000

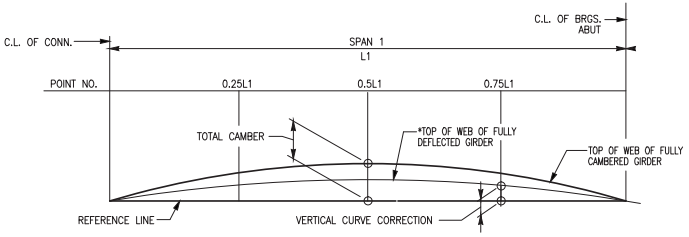

CAMBER DIAGRAM

* TOP OF WEB OF FULLY DEFLECTED GIRDER LINE WILL MATCH REFERENCE LINE ON BRIDGES THAT DO NOT HAVE A VERTICAL CURVE.

NOTES:

1. CAMBER VALUES ARE IN INCHES
2. VALUES INCLUDE POINT LOADS FROM BEAMS

CONTRACT NO. | CD NO. M79

TEMPORARY ACCESS ROAD
RIVERSIDE BOULEVARD
WEST 59TH STREET TO WEST 61ST STREET
BOROUGH OF MANHATTAN

CAMBER TABLE - BEAMS

DWG. NO.	SCALE	DATE	SHEET
ST-32	N.T.S.	09-15-2014	37 OF 68

The RBA Group — ENGINEERS • ARCHITECTS • PLANNERS
27 UNION SQUARE WEST
NEW YORK, NEW YORK 10003

0 1 2 3 4
ORIGINAL SIZE IN INCHES

PREPARED BY: THE RBA GROUP
IN CHARGE: LR | DRAFTER: RJF
DESIGNER: WS | CHECKER: WS

RBA - RIVERSIDE BOULEVARD - TEMPORARY ACCESS ROAD
FILE: TAR_TBL3 (CAM)

TEMPORARY ACCESS RAMP						
CAMBER TABLE		CL OF COLUMN	0.25 L1	0.5 L1	0.75 L1	CL OF SUPPORT /BRGS. ABUT
G-1A	I STEEL DL	0.000	0.014	0.019	0.014	0.000
	II CONCRETE DL	0.000	0.118	0.166	0.118	0.000
	III SUPERIMPOSED DL	0.000	0.109	0.153	0.109	0.000
	IV VERTICAL CURVE	0.000	0.000	0.000	0.000	0.000
	TOTAL= I+II+III+IV	0.000	0.240	0.338	0.240	0.000
G-1B	I STEEL DL	0.000	0.009	0.013	0.009	0.000
	II CONCRETE DL	0.000	0.080	0.131	0.080	0.000
	III SUPERIMPOSED DL	0.000	0.092	0.152	0.092	0.000
	IV VERTICAL CURVE	0.000	0.000	0.000	0.000	0.000
	TOTAL= I+II+III+IV	0.000	0.181	0.296	0.181	0.000
G-2A	I STEEL DL	0.000	0.008	0.012	0.008	0.000
	II CONCRETE DL	0.000	0.118	0.166	0.118	0.000
	III SUPERIMPOSED DL	0.000	0.109	0.153	0.109	0.000
	IV VERTICAL CURVE	0.000	0.000	0.000	0.000	0.000
	TOTAL= I+II+III+IV	0.000	0.235	0.331	0.235	0.000
G-2B	I STEEL DL	0.000	0.009	0.013	0.009	0.000
	II CONCRETE DL	0.000	0.080	0.131	0.080	0.000
	III SUPERIMPOSED DL	0.000	0.092	0.152	0.092	0.000
	IV VERTICAL CURVE	0.000	0.000	0.000	0.000	0.000
	TOTAL= I+II+III+IV	0.000	0.181	0.296	0.181	0.000
G-3A	I STEEL DL	0.000	0.014	0.019	0.014	0.000
	II CONCRETE DL	0.000	0.118	0.166	0.118	0.000
	III SUPERIMPOSED DL	0.000	0.109	0.153	0.109	0.000
	IV VERTICAL CURVE	0.000	0.000	0.000	0.000	0.000
	TOTAL= I+II+III+IV	0.000	0.240	0.338	0.240	0.000
G-3B	I STEEL DL	0.000	0.009	0.013	0.009	0.000
	II CONCRETE DL	0.000	0.080	0.131	0.080	0.000
	III SUPERIMPOSED DL	0.000	0.092	0.152	0.092	0.000
	IV VERTICAL CURVE	0.000	0.000	0.000	0.000	0.000
	TOTAL= I+II+III+IV	0.000	0.181	0.296	0.181	0.000
G-4A	I STEEL DL	0.000	0.014	0.019	0.014	0.000
	II CONCRETE DL	0.000	0.120	0.170	0.120	0.000
	III SUPERIMPOSED DL	0.000	0.111	0.156	0.111	0.000
	IV VERTICAL CURVE	0.000	0.000	0.000	0.000	0.000
	TOTAL= I+II+III+IV	0.000	0.245	0.345	0.245	0.000
G-4B	I STEEL DL	0.000	0.013	0.018	0.013	0.000
	II CONCRETE DL	0.000	0.112	0.162	0.112	0.000
	III SUPERIMPOSED DL	0.000	0.107	0.145	0.107	0.000
	IV VERTICAL CURVE	0.000	0.000	0.000	0.000	0.000
	TOTAL= I+II+III+IV	0.000	0.232	0.325	0.232	0.000
G-5	I STEEL DL	0.000	0.003	0.004	0.003	0.000
	II CONCRETE DL	0.000	0.016	0.023	0.016	0.000
	III SUPERIMPOSED DL	0.000	0.014	0.019	0.014	0.000
	IV VERTICAL CURVE	0.000	0.000	0.000	0.000	0.000
	TOTAL= I+II+III+IV	0.000	0.033	0.047	0.033	0.000
G-6	I STEEL DL	0.000	0.002	0.003	0.002	0.000
	II CONCRETE DL	0.000	0.019	0.029	0.019	0.000
	III SUPERIMPOSED DL	0.000	0.019	0.027	0.019	0.000
	IV VERTICAL CURVE	0.000	0.000	0.000	0.000	0.000
	TOTAL= I+II+III+IV	0.000	0.040	0.058	0.040	0.000

TEMPORARY ACCESS RAMP						
CAMBER TABLE		CL OF COLUMN	0.25 L1	0.5 L1	0.75 L1	CL OF SUPPORT /BRGS. ABUT
G-7	I STEEL DL	0.000	0.009	0.012	0.009	0.000
	II CONCRETE DL	0.000	0.091	0.128	0.091	0.000
	III SUPERIMPOSED DL	0.000	0.106	0.156	0.106	0.000
	IV VERTICAL CURVE	0.000	0.000	0.000	0.000	0.000
	TOTAL= I+II+III+IV	0.000	0.206	0.291	0.206	0.000
G-8	I STEEL DL	0.000	0.009	0.012	0.009	0.000
	II CONCRETE DL	0.000	0.092	0.129	0.092	0.000
	III SUPERIMPOSED DL	0.000	0.107	0.150	0.107	0.000
	IV VERTICAL CURVE	0.000	0.000	0.000	0.000	0.000
	TOTAL= I+II+III+IV	0.000	0.207	0.292	0.207	0.000
G-9	I STEEL DL	0.000	0.009	0.012	0.009	0.000
	II CONCRETE DL	0.000	0.095	0.134	0.095	0.000
	III SUPERIMPOSED DL	0.000	0.107	0.151	0.107	0.000
	IV VERTICAL CURVE	0.000	0.000	0.000	0.000	0.000
	TOTAL= I+II+III+IV	0.000	0.211	0.297	0.211	0.000
G-10	I STEEL DL	0.000	0.009	0.012	0.009	0.000
	II CONCRETE DL	0.000	0.101	0.142	0.101	0.000
	III SUPERIMPOSED DL	0.000	0.108	0.152	0.108	0.000
	IV VERTICAL CURVE	0.000	0.000	0.000	0.000	0.000
	TOTAL= I+II+III+IV	0.000	0.217	0.306	0.217	0.000
G-11	I STEEL DL	0.000	0.008	0.012	0.008	0.000
	II CONCRETE DL	0.000	0.109	0.153	0.109	0.000
	III SUPERIMPOSED DL	0.000	0.109	0.154	0.109	0.000
	IV VERTICAL CURVE	0.000	0.000	0.000	0.000	0.000
	TOTAL= I+II+III+IV	0.000	0.227	0.320	0.227	0.000
G-12	I STEEL DL	0.000	0.014	0.019	0.014	0.000
	II CONCRETE DL	0.000	0.117	0.164	0.115	0.000
	III SUPERIMPOSED DL	0.000	0.111	0.156	0.109	0.000
	IV VERTICAL CURVE	0.000	0.000	0.000	0.000	0.000
	TOTAL= I+II+III+IV	0.000	0.241	0.340	0.238	0.000

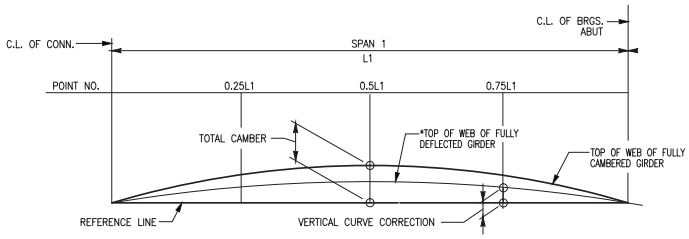

CAMBER DIAGRAM

* TOP OF WEB OF FULLY DEFLECTED GIRDER LINE WILL MATCH REFERENCE LINE ON BRIDGES THAT DO NOT HAVE A VERTICAL CURVE.

NOTES:

1. CAMBER VALUES ARE IN INCHES
2. VALUES INCLUDE POINT LOADS FROM BEAMS

The RBA Group — ENGINEERS • ARCHITECTS • PLANNERS
27 UNION SQUARE WEST
NEW YORK, NEW YORK 10003

0 1 2 3 4
ORIGINAL SIZE IN INCHES

PREPARED BY THE RBA GROUP
IN CHARGE LR DRAFTER RJF
DESIGNER WS CHECKER WS

CONTRACT NO. | CD NO. M79

TEMPORARY ACCESS ROAD
RIVERSIDE BOULEVARD
WEST 59TH STREET TO WEST 61ST STREET
BOROUGH OF MANHATTAN

CAMBER TABLE - GIRDERS

DWG. NO.	SCALE	DATE	SHEET
ST-32A	N.T.S.	09-15-2014	37F OF 68

RBA - RIVERSIDE BOULEVARD - TEMPORARY ACCESS ROAD
FILE: TAR_TBL3 (CAM)

TEMPORARY ACCESS RAMP						
HAUNCH TABLE		CL OF COLUMN	0.25 L1	0.5 L1	0.75 L1	CL OF SUPPORT /BRGS, ABUT
B-14	A REQ'D BOTTOM OF SLAB ELEVATION	15.629	15.747	15.865	15.983	16.039
	B TOP OF STEEL EL. (FIELD MEASURE)					
	C = A - B					
	D CONCRETE + S.D.L. DEFLECTION	0.000	0.021	0.029	0.021	0.000
	E DEPTH OF HAUNCH REQ'D = C+D					
B-15	A REQ'D BOTTOM OF SLAB ELEVATION	16.075	16.175	16.274	16.374	16.474
	B TOP OF STEEL EL. (FIELD MEASURE)					
	C = A - B					
	D CONCRETE + S.D.L. DEFLECTION	0.000	0.012	0.017	0.012	0.000
	E DEPTH OF HAUNCH REQ'D = C+D					
B-16	A REQ'D BOTTOM OF SLAB ELEVATION	16.521	16.608	16.694	16.780	16.867
	B TOP OF STEEL EL. (FIELD MEASURE)					
	C = A - B					
	D CONCRETE + S.D.L. DEFLECTION	0.000	0.013	0.018	0.013	0.000
	E DEPTH OF HAUNCH REQ'D = C+D					
B-17	A REQ'D BOTTOM OF SLAB ELEVATION	17.184	17.210	17.236	17.262	17.288
	B TOP OF STEEL EL. (FIELD MEASURE)					
	C = A - B					
	D CONCRETE + S.D.L. DEFLECTION	0.000	0.008	0.012	0.008	0.000
	E DEPTH OF HAUNCH REQ'D = C+D					
B-18	A REQ'D BOTTOM OF SLAB ELEVATION	17.632	17.733	17.834	17.935	18.036
	B TOP OF STEEL EL. (FIELD MEASURE)					
	C = A - B					
	D CONCRETE + S.D.L. DEFLECTION	0.000	0.003	0.004	0.003	0.000
	E DEPTH OF HAUNCH REQ'D = C+D					
B-19	A REQ'D BOTTOM OF SLAB ELEVATION	18.326	18.388	18.450	18.512	18.574
	B TOP OF STEEL EL. (FIELD MEASURE)					
	C = A - B					
	D CONCRETE + S.D.L. DEFLECTION	0.000	0.002	0.003	0.002	0.000
	E DEPTH OF HAUNCH REQ'D = C+D					
B-20	A REQ'D BOTTOM OF SLAB ELEVATION	18.813	18.874	18.936	18.997	19.059
	B TOP OF STEEL EL. (FIELD MEASURE)					
	C = A - B					
	D CONCRETE + S.D.L. DEFLECTION	0.000	0.002	0.003	0.002	0.000
	E DEPTH OF HAUNCH REQ'D = C+D					
B-21	A REQ'D BOTTOM OF SLAB ELEVATION	19.299	19.360	19.421	19.483	19.544
	B TOP OF STEEL EL. (FIELD MEASURE)					
	C = A - B					
	D CONCRETE + S.D.L. DEFLECTION	0.000	0.002	0.003	0.002	0.000
	E DEPTH OF HAUNCH REQ'D = C+D					

TEMPORARY ACCESS RAMP						
HAUNCH TABLE		CL OF COLUMN	0.25 L1	0.5 L1	0.75 L1	CL OF SUPPORT /BRGS, ABUT
B-22	A REQ'D BOTTOM OF SLAB ELEVATION	19.742	19.814	19.886	19.958	20.030
	B TOP OF STEEL EL. (FIELD MEASURE)					
	C = A - B					
	D CONCRETE + S.D.L. DEFLECTION	0.000	0.002	0.003	0.002	0.000
	E DEPTH OF HAUNCH REQ'D = C+D					
B-23	A REQ'D BOTTOM OF SLAB ELEVATION	20.272	20.333	20.395	20.456	20.518
	B TOP OF STEEL EL. (FIELD MEASURE)					
	C = A - B					
	D CONCRETE + S.D.L. DEFLECTION	0.000	0.003	0.004	0.003	0.000
	E DEPTH OF HAUNCH REQ'D = C+D					
B-24	A REQ'D BOTTOM OF SLAB ELEVATION	20.758	20.820	20.882	20.945	21.007
	B TOP OF STEEL EL. (FIELD MEASURE)					
	C = A - B					
	D CONCRETE + S.D.L. DEFLECTION	0.000	0.003	0.004	0.003	0.000
	E DEPTH OF HAUNCH REQ'D = C+D					
B-25	A REQ'D BOTTOM OF SLAB ELEVATION	21.244	21.307	21.370	21.433	21.496
	B TOP OF STEEL EL. (FIELD MEASURE)					
	C = A - B					
	D CONCRETE + S.D.L. DEFLECTION	0.000	0.003	0.004	0.003	0.000
	E DEPTH OF HAUNCH REQ'D = C+D					
B-26	A REQ'D BOTTOM OF SLAB ELEVATION	21.730	21.794	21.859	21.923	21.987
	B TOP OF STEEL EL. (FIELD MEASURE)					
	C = A - B					
	D CONCRETE + S.D.L. DEFLECTION	0.000	0.003	0.005	0.003	0.000
	E DEPTH OF HAUNCH REQ'D = C+D					
B-27	A REQ'D BOTTOM OF SLAB ELEVATION	22.216	22.281	22.347	22.413	22.479
	B TOP OF STEEL EL. (FIELD MEASURE)					
	C = A - B					
	D CONCRETE + S.D.L. DEFLECTION	0.000	0.004	0.005	0.004	0.000
	E DEPTH OF HAUNCH REQ'D = C+D					
B-28	A REQ'D BOTTOM OF SLAB ELEVATION	22.701	22.769	22.836	22.904	22.971
	B TOP OF STEEL EL. (FIELD MEASURE)					
	C = A - B					
	D CONCRETE + S.D.L. DEFLECTION	0.000	0.004	0.006	0.004	0.000
	E DEPTH OF HAUNCH REQ'D = C+D					
B-29	A REQ'D BOTTOM OF SLAB ELEVATION	23.191	23.259	23.328	23.397	23.465
	B TOP OF STEEL EL. (FIELD MEASURE)					
	C = A - B					
	D CONCRETE + S.D.L. DEFLECTION	0.000	0.005	0.007	0.005	0.000
	E DEPTH OF HAUNCH REQ'D = C+D					

TEMPORARY ACCESS RAMP						
HAUNCH TABLE		CL OF COLUMN	0.25 L1	0.5 L1	0.75 L1	CL OF SUPPORT /BRGS, ABUT
B-30	A REQ'D BOTTOM OF SLAB ELEVATION	23.681	23.752	23.822	23.893	23.963
	B TOP OF STEEL EL. (FIELD MEASURE)					
	C = A - B					
	D CONCRETE + S.D.L. DEFLECTION	0.000	0.006	0.008	0.006	0.000
	E DEPTH OF HAUNCH REQ'D = C+D					
B-31	A REQ'D BOTTOM OF SLAB ELEVATION	24.172	24.245	24.318	24.391	24.465
	B TOP OF STEEL EL. (FIELD MEASURE)					
	C = A - B					
	D CONCRETE + S.D.L. DEFLECTION	0.000	0.006	0.009	0.006	0.000
	E DEPTH OF HAUNCH REQ'D = C+D					
B-32	A REQ'D BOTTOM OF SLAB ELEVATION	24.662	24.738	24.814	24.890	24.966
	B TOP OF STEEL EL. (FIELD MEASURE)					
	C = A - B					
	D CONCRETE + S.D.L. DEFLECTION	0.000	0.007	0.010	0.007	0.000
	E DEPTH OF HAUNCH REQ'D = C+D					
B-33	A REQ'D BOTTOM OF SLAB ELEVATION	25.153	25.231	25.310	25.388	25.467
	B TOP OF STEEL EL. (FIELD MEASURE)					
	C = A - B					
	D CONCRETE + S.D.L. DEFLECTION	0.000	0.008	0.012	0.008	0.000
	E DEPTH OF HAUNCH REQ'D = C+D					
B-34	A REQ'D BOTTOM OF SLAB ELEVATION	25.643	25.726	25.808	25.887	25.969
	B TOP OF STEEL EL. (FIELD MEASURE)					
	C = A - B					
	D CONCRETE + S.D.L. DEFLECTION	0.000	0.009	0.012	0.009	0.000
	E DEPTH OF HAUNCH REQ'D = C+D					
B-35	A REQ'D BOTTOM OF SLAB ELEVATION	26.028	26.111	26.195	26.278	26.362
	B TOP OF STEEL EL. (FIELD MEASURE)					
	C = A - B					
	D CONCRETE + S.D.L. DEFLECTION	0.000	0.011	0.015	0.011	0.000
	E DEPTH OF HAUNCH REQ'D = C+D					
B-36	A REQ'D BOTTOM OF SLAB ELEVATION	26.624	26.701	26.777	26.854	26.931
	B TOP OF STEEL EL. (FIELD MEASURE)					
	C = A - B					
	D CONCRETE + S.D.L. DEFLECTION	0.000	0.011	0.016	0.011	0.000
	E DEPTH OF HAUNCH REQ'D = C+D					

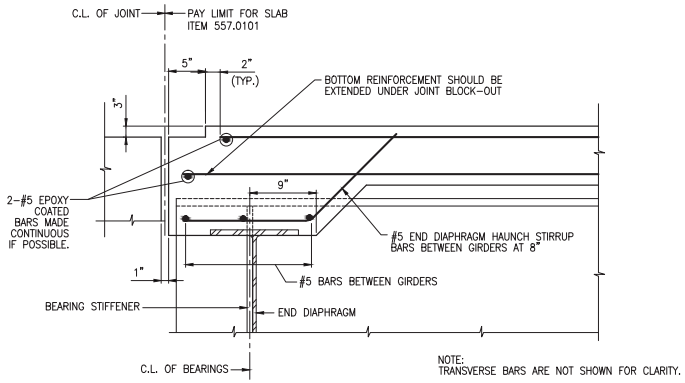

NOTE:
TRANSVERSE BARS ARE NOT SHOWN FOR CLARITY.

END DIAPHRAGM HAUNCH DETAIL

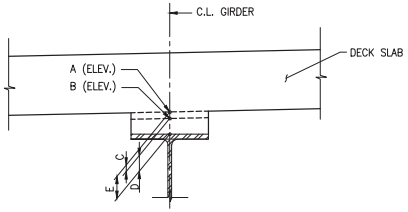

A = THEORETICAL BOTTOM OF SLAB ELEVATION (FT)

B = TOP OF STEEL ELEVATION UPON COMPLETION OF ERECTION OF GIRDERS (FIELD MEASURED (FT)

C = A–B (FT)

D = CONCRETE + SDL DEFLECTION (FT)

E = DEPTH OF HAUNCH REQUIRED C+D (FT)

GIRDER HAUNCH DETAIL

RBA - RIVERSIDE BOULEVARD - TEMPORARY ACCESS ROAD
FILE: TAR_TBL4 (HAUNCH)

The RBA Group — ENGINEERS • ARCHITECTS • PLANNERS
27 UNION SQUARE WEST
NEW YORK, NEW YORK 10003

0 1 2 3 4
ORIGINAL SIZE IN INCHES

PREPARED BY: THE RBA GROUP
IN CHARGE: LR — DRAFTER: RJF
DESIGNER: WS — CHECKER: WS

CONTRACT NO. | CD NO. M79

TEMPORARY ACCESS ROAD
RIVERSIDE BOULEVARD
WEST 59TH STREET TO WEST 61ST STREET
BOROUGH OF MANHATTAN

HAUNCH TABLE - SECTION 3

DWG. NO.	SCALE	DATE	SHEET
ST-33	N.T.S.	09-15-2014	38 OF 68

TEMPORARY ACCESS RAMP						
HAUNCH TABLE		CL OF COLUMN	0.25 L1	0.5 L1	0.75 L1	CL OF SUPPORT /BRGS. ABUT
B-1	A REQ'D BOTTOM OF SLAB ELEVATION	9.625	9.720	9.815	9.910	10.005
	B TOP OF STEEL EL. (FIELD MEASURE)					
	C = A - B					
	D CONCRETE + S.D.L. DEFLECTION	0.000	0.009	0.012	0.009	0.000
	E DEPTH OF HAUNCH REQ'D = C+D					
B-2	A REQ'D BOTTOM OF SLAB ELEVATION	10.162	10.198	10.278	10.366	10.464
	B TOP OF STEEL EL. (FIELD MEASURE)					
	C = A - B					
	D CONCRETE + S.D.L. DEFLECTION	0.000	0.011	0.015	0.011	0.000
	E DEPTH OF HAUNCH REQ'D = C+D					
B-3	A REQ'D BOTTOM OF SLAB ELEVATION	10.573	10.674	10.776	10.879	10.979
	B TOP OF STEEL EL. (FIELD MEASURE)					
	C = A - B					
	D CONCRETE + S.D.L. DEFLECTION	0.000	0.011	0.015	0.011	0.000
	E DEPTH OF HAUNCH REQ'D = C+D					
B-4	A REQ'D BOTTOM OF SLAB ELEVATION	11.036	11.131	11.226	11.321	11.416
	B TOP OF STEEL EL. (FIELD MEASURE)					
	C = A - B					
	D CONCRETE + S.D.L. DEFLECTION	0.000	0.010	0.015	0.010	0.000
	E DEPTH OF HAUNCH REQ'D = C+D					
B-5	A REQ'D BOTTOM OF SLAB ELEVATION	11.513	11.601	11.689	11.776	11.864
	B TOP OF STEEL EL. (FIELD MEASURE)					
	C = A - B					
	D CONCRETE + S.D.L. DEFLECTION	0.000	0.011	0.015	0.011	0.000
	E DEPTH OF HAUNCH REQ'D = C+D					
B-6	A REQ'D BOTTOM OF SLAB ELEVATION	11.984	12.065	12.167	12.268	12.366
	B TOP OF STEEL EL. (FIELD MEASURE)					
	C = A - B					
	D CONCRETE + S.D.L. DEFLECTION	0.000	0.011	0.015	0.011	0.000
	E DEPTH OF HAUNCH REQ'D = C+D					
B-7	A REQ'D BOTTOM OF SLAB ELEVATION	12.447	12.542	12.637	12.732	12.827
	B TOP OF STEEL EL. (FIELD MEASURE)					
	C = A - B					
	D CONCRETE + S.D.L. DEFLECTION	0.000	0.010	0.015	0.010	0.000
	E DEPTH OF HAUNCH REQ'D = C+D					
B-8	A REQ'D BOTTOM OF SLAB ELEVATION	12.924	13.012	13.100	13.188	13.275
	B TOP OF STEEL EL. (FIELD MEASURE)					
	C = A - B					
	D CONCRETE + S.D.L. DEFLECTION	0.000	0.011	0.015	0.011	0.000
	E DEPTH OF HAUNCH REQ'D = C+D					

TEMPORARY ACCESS RAMP						
HAUNCH TABLE		CL OF COLUMN	0.25 L1	0.5 L1	0.75 L1	CL OF SUPPORT /BRGS. ABUT
B-9	A REQ'D BOTTOM OF SLAB ELEVATION	13.395	13.496	13.598	13.700	13.801
	B TOP OF STEEL EL. (FIELD MEASURE)					
	C = A - B					
	D CONCRETE + S.D.L. DEFLECTION	0.000	0.011	0.015	0.011	0.000
	E DEPTH OF HAUNCH REQ'D = C+D					
B-10	A REQ'D BOTTOM OF SLAB ELEVATION	13.898	13.963	14.048	14.143	14.238
	B TOP OF STEEL EL. (FIELD MEASURE)					
	C = A - B					
	D CONCRETE + S.D.L. DEFLECTION	0.000	0.011	0.015	0.011	0.000
	E DEPTH OF HAUNCH REQ'D = C+D					
B-11	A REQ'D BOTTOM OF SLAB ELEVATION	14.348	14.436	14.531	14.626	14.721
	B TOP OF STEEL EL. (FIELD MEASURE)					
	C = A - B					
	D CONCRETE + S.D.L. DEFLECTION	0.000	0.011	0.016	0.011	0.000
	E DEPTH OF HAUNCH REQ'D = C+D					
B-12	A REQ'D BOTTOM OF SLAB ELEVATION	14.836	14.931	15.026	15.122	15.217
	B TOP OF STEEL EL. (FIELD MEASURE)					
	C = A - B					
	D CONCRETE + S.D.L. DEFLECTION	0.000	0.011	0.016	0.011	0.000
	E DEPTH OF HAUNCH REQ'D = C+D					
B-13	A REQ'D BOTTOM OF SLAB ELEVATION	15.332	15.427	15.522	15.617	15.712
	B TOP OF STEEL EL. (FIELD MEASURE)					
	C = A - B					
	D CONCRETE + S.D.L. DEFLECTION	0.000	0.009	0.013	0.009	0.000
	E DEPTH OF HAUNCH REQ'D = C+D					

RBA - RIVERSIDE BOULEVARD - TEMPORARY ACCESS ROAD
FILE: TAR_TBL4 (HAUNCH)

The RBA Group — Engineers • Architects • Planners
27 UNION SQUARE WEST
NEW YORK, NEW YORK 10003

0 1 2 3 4
ORIGINAL SIZE IN INCHES

PREPARED BY: THE RBA GROUP
IN CHARGE: LR
DRAFTER: RJF
DESIGNER: WS
CHECKER: WS

CONTRACT NO.
CD NO. M79

TEMPORARY ACCESS ROAD
RIVERSIDE BOULEVARD
WEST 59TH STREET TO WEST 61ST STREET
BOROUGH OF MANHATTAN

HAUNCH TABLE - SECTION 2

DWG. NO.	SCALE	DATE	SHEET
ST-33A	N.T.S.	09-15-2014	38F OF 68

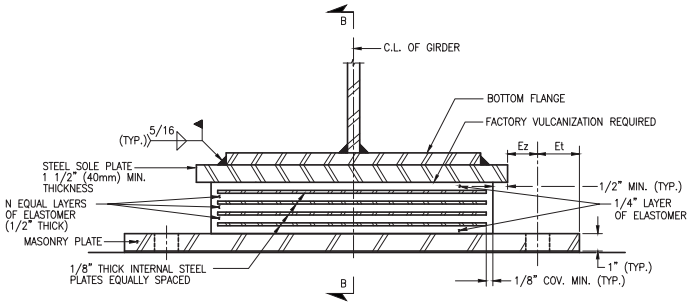

ELEVATION
TYPICAL EXPANSION BEARING

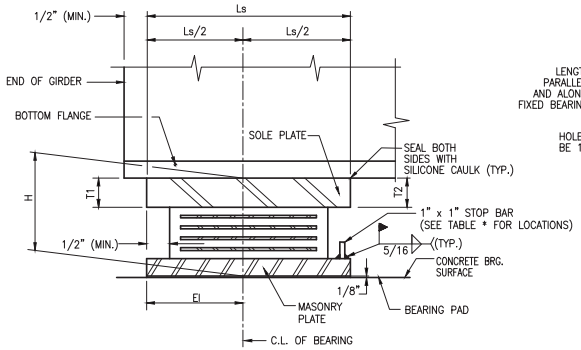

SECTION B–B

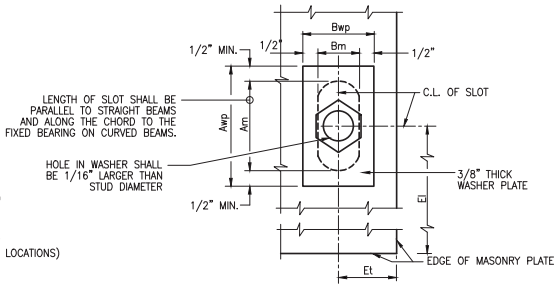

TYPICAL SLOTTED HOLE DETAIL
MASONRY PLATE

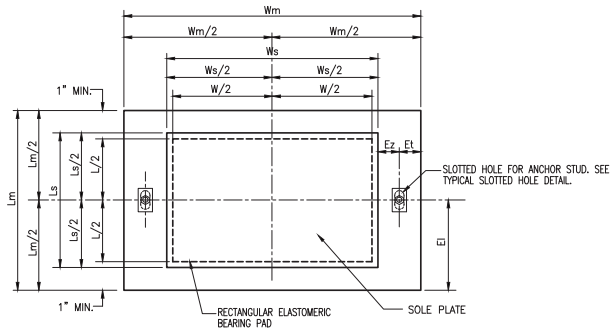

PLAN
TYPICAL RECTANGULAR EXPANSION BEARING

NOTES:

1. THE BEARINGS SHALL MEET THE REQUIREMENTS OF NYSDOT STANDARD SPECIFICATION SECTION 565 UNLESS OTHERWISE NOTED.
2. ALL ELASTOMER SHALL BE 50 DUROMETER HARDNESS ON THE SHORE A SCALE.
3. ALL STEEL, EXCEPT THE INTERNAL STEEL LAMINATES, SHALL CONFORM TO ASTM A709, GRADE 50W.
4. BEARING PADS SHALL CONFORM TO ONE OF THE FOLLOWING MATERIAL SPECIFICATIONS: 728–01, 728–02 OR 728–03.
5. INSTALLATION ALIGNMENT:
   THE MAXIMUM VARIATION FROM PERFACT ALIGNMENT UNDER FULL DEAD LOAD SHALL NOT EXCEED 1/8". THIS VARIATION SHALL BE MEASURED AS THE HORIZONTAL DISTANCE BETWEEN THE CENTERLINE OF THE HIGHEST ELASTOMER SURFACE AND THE CENTERLINE OF THE LOWEST ELASTOMER SURFACE.
6. CONCRETE SURFACES UNDER THE BEARINGS SHALL CONFORM TO SUBSECTION 565.3.02 "CONCRETE BEARING SURFACE PREPARATION" OF THE NEW YORK STATE STANDARD SPECIFICATIONS, CONSTRUCTION AND MATERIALS.
7. THE BEARING PAD, ANCHOR STUDS, WASHER PLATES AND NUTS SHALL BE INCLUDED IN THE UNIT PRICE BID FOR THE BEARING ITEM.
8. IF THE ANCHOR STUDS ARE SET UNDER THE SOLE PLATE, A MINIMUM CLEARANCE EQUAL TO TWO TIMES THE THICKNESS OF ANCHOR NUT PLUS 1" (25 mm) SHALL BE MAINTAINED BETWEEN THE TOP OF MASONRY PLATE AND BOTTOM OF THE SOLE PLATE.

ELASTOMERIC BEARING (TYPE E.B.) TABLE - TEMPORARY ACCESS ROAD

LOCATION	ITEM NO.	QUANTITY REQUIRED	DL+SDL (KIPS)	LL W/O IMP. (KIPS)	TOTAL DESIGN REACTION (KIPS)	SHAPE FACTOR	ELASTOMER LAYERS (IN)					h_{ri} (IN)	COMP. AREA (SQ. IN)	SHEAR AREA (SQ. IN)	MASONRY PLATE (IN)						ANCHOR		WELD SIZE (IN)	WASHER		SOLE PLATE (IN)				BRG. H (IN)
							THK. / LAYER	N LAYERS	L	W	D				Wm	Lm	Et	El	Am	Bm	DIA. (IN)	STUDS / BRG.		Awp	Bwp	Ws	Ls	T1	T2	
B-14 & B-15	565.2032	2 *	20	57	77	6.15	1/2	3	10	16		2	157	160	23 3/4	17	2	6	1 5/16	1 5/16	1	2	5/16	2 5/16	2 1/16	17	11	1 5/8	1 1/2	5 1/16
B-16	565.2032	1 *	18	47	65	5.65	1/2	3	10	13		2	127	130	20 3/4	17	2	6	1 5/16	1 5/16	1	2	5/16	2 5/16	2 1/16	14	11	1 3/16	1 1/2	5 1/16
B-17	565.2032	1 *	30	41	61	5.65	1/2	2	10	13		1 1/2	127	130	20 3/4	17	2	6	1 5/16	1 5/16	1	2	5/16	2 5/16	2 1/16	14	11	1 1/2	1 1/2	4 3/8
B-18 to B-35	565.2032	18 *	18	45	63	5.65	1/2	2	10	13		1 1/2	127	130	20 3/4	17	2	6	1 5/16	1 5/16	1	2	5/16	2 5/16	2 1/16	14	11	1 3/4	1 1/2	4 1/2
B-36	565.2032	1 *	18	45	63	5.65	1/2	2	10	13		1 1/2	127	130	20 3/4	17	2	6	1 5/16	1 5/16	1	2	5/16	2 5/16	2 1/16	14	11	1 3/4	1 1/2	4 1/2
G1A & G1B	565.2032	2 *	37	36	73	6.15	1/2	3	10	16		2	157	160	23 3/4	17	2	6	1 5/16	1 5/16	1	2	5/16	2 5/16	2 1/16	17	11	1 1/2	2 1/8	5 5/16

* PROVIDE 1" STOP BAR. SEE SECTION B–B THIS DWG.

The RBA Group — ENGINEERS • ARCHITECTS • PLANNERS
27 UNION SQUARE WEST
NEW YORK, NEW YORK 10003

0 1 2 3 4
ORIGINAL SIZE IN INCHES

PREPARED BY: THE RBA GROUP
IN CHARGE: LR — DRAFTER: RJF
DESIGNER: WS — CHECKER: WS

CONTRACT NO. | CD NO. M79

TEMPORARY ACCESS ROAD
RIVERSIDE BOULEVARD
WEST 59TH STREET TO WEST 61ST STREET
BOROUGH OF MANHATTAN

ELASTOMERIC BEARING DETAILS - I

DWG. NO.	SCALE	DATE	SHEET
ST-34	N.T.S.	09-15-2014	39 OF 68

RBA - RIVERSIDE BOULEVARD - TEMPORARY ACCESS ROAD
FILE: TAR_BDET2

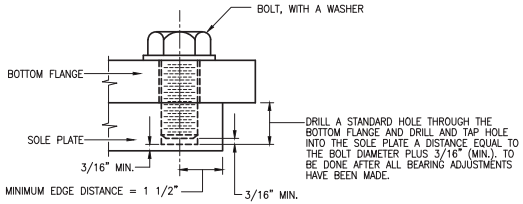

BOLT CONNECTION

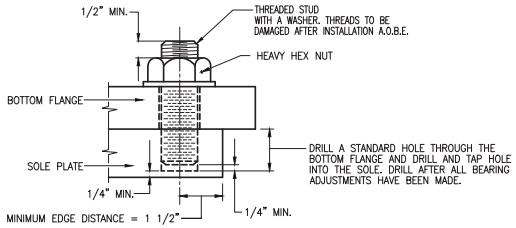

STUD CONNECTION

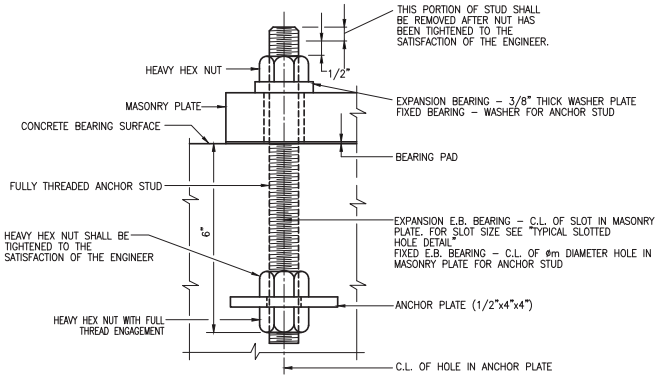

ANCHOR STUD WITH ANCHOR PLATE
(NEW PEDESTALS ONLY)

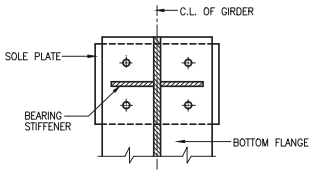

PLAN – CONNECTION DETAIL

NOTE:
GUIDE BARS AND SLOTTED HOLES SHALL BE ORIENTED PARALLEL TO THE ASSUMED DIRECTION OF MOVEMENT.

NOTE:

1. ANCHOR STUDS, WASHERS, WASHER PLATES, ANCHOR PLATES AND NUTS SHALL MEET THE REQUIREMENTS OF MATERIAL SPECIFICATOIN 723–60. THEY SHALL BE GALVANIZED IN ACCORDANCE WITH THE REQUIREMENTS OF MATERIAL SPECIFICATION 719–01, "GALVANIZED COATINGS AND REPAIR METHODS." THEIR COST (INCLUDING GALVANIZING) SHALL BE INCLUDED IN THE UNIT PRICE BID FOR THE BEARING ITEM.

CONTRACT NO.	CD NO. M79

TEMPORARY ACCESS ROAD
RIVERSIDE BOULEVARD
WEST 59TH STREET TO WEST 61ST STREET
BOROUGH OF MANHATTAN

ELASTOMERIC BEARING DETAILS - II

DWG. NO.	SCALE	DATE	SHEET
ST-35	N.T.S.	09-15-2014	40 OF 68

The RBA Group — Engineers • Architects • Planners
27 UNION SQUARE WEST
NEW YORK, NEW YORK 10003

0 1 2 3 4
ORIGINAL SIZE IN INCHES

PREPARED BY THE RBA GROUP
IN CHARGE LR DRAFTER RJF
DESIGNER WS CHECKER WS

RBA - RIVERSIDE BOULEVARD - TEMPORARY ACCESS ROAD
FILE: TAR_BDET3

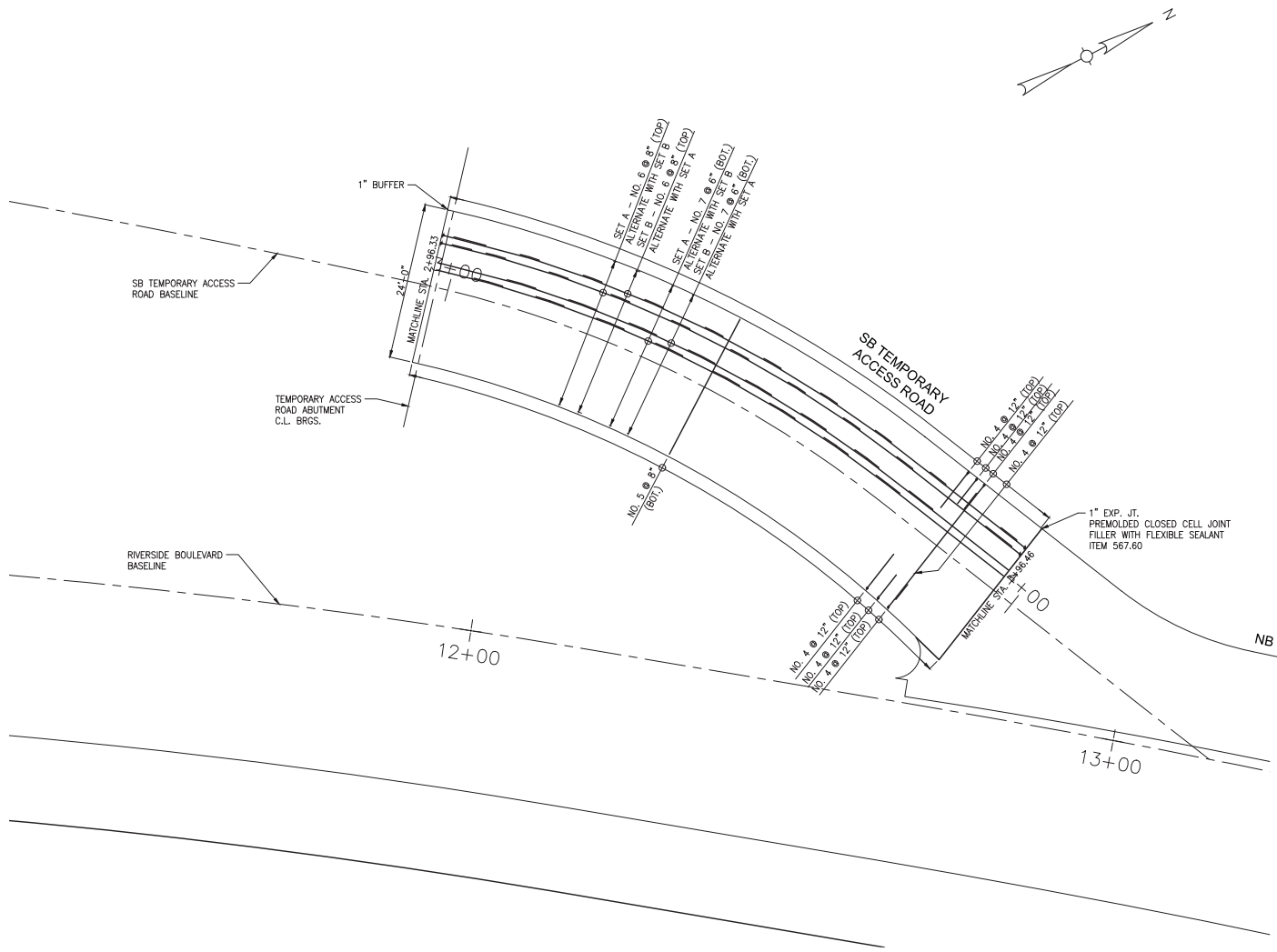

NOTES:

1. REINFORCEMENT SPLICE TABLE:

BAR SIZE	REQUIRED LAP SPLICE LENGTH
#5	2'-8"
#6	3'-6"
#7	4'-7"

2. SET "A" AND SET "B" SHALL HAVE DIFFERENT LENGTHS IN ORDER TO ALTERNATE THE REINFORCEMENT SPLICE LOCATIONS IN THE DECK SLAB. ALL REINFORCEMENT SHOP DRAWINGS SHALL BE SUBMITTED FOR ENGINEERS APPROVAL PRIOR TO CONSTRUCTION

REFERENCES:

1. FOR DECK SECTIONS AND DETAILS, SEE DWG NOS ST-38 TO ST-40

2. FOR REINFORCEMENT/COVER, SEE DWG NO. GN-1.

CONTRACT NO. | CD NO. M79

TEMPORARY ACCESS ROAD
RIVERSIDE BOULEVARD
WEST 59TH STREET TO WEST 61ST STREET
BOROUGH OF MANHATTAN

DECK PLAN - I

DWG. NO.	SCALE	DATE	SHEET
ST-36	1" = 8'	09-15-2014	41 OF 68

The RBA Group — ENGINEERS • ARCHITECTS • PLANNERS
27 UNION SQUARE WEST
NEW YORK, NEW YORK 10003

0 1 2 3 4
ORIGINAL SIZE IN INCHES

PREPARED BY THE RBA GROUP
IN CHARGE LR | DRAFTER RJF
DESIGNER WS | CHECKER WS

RBA - RIVERSIDE BOULEVARD - TEMPORARY ACCESS ROAD
FILE: TAR_DECKPLAN_SEC2

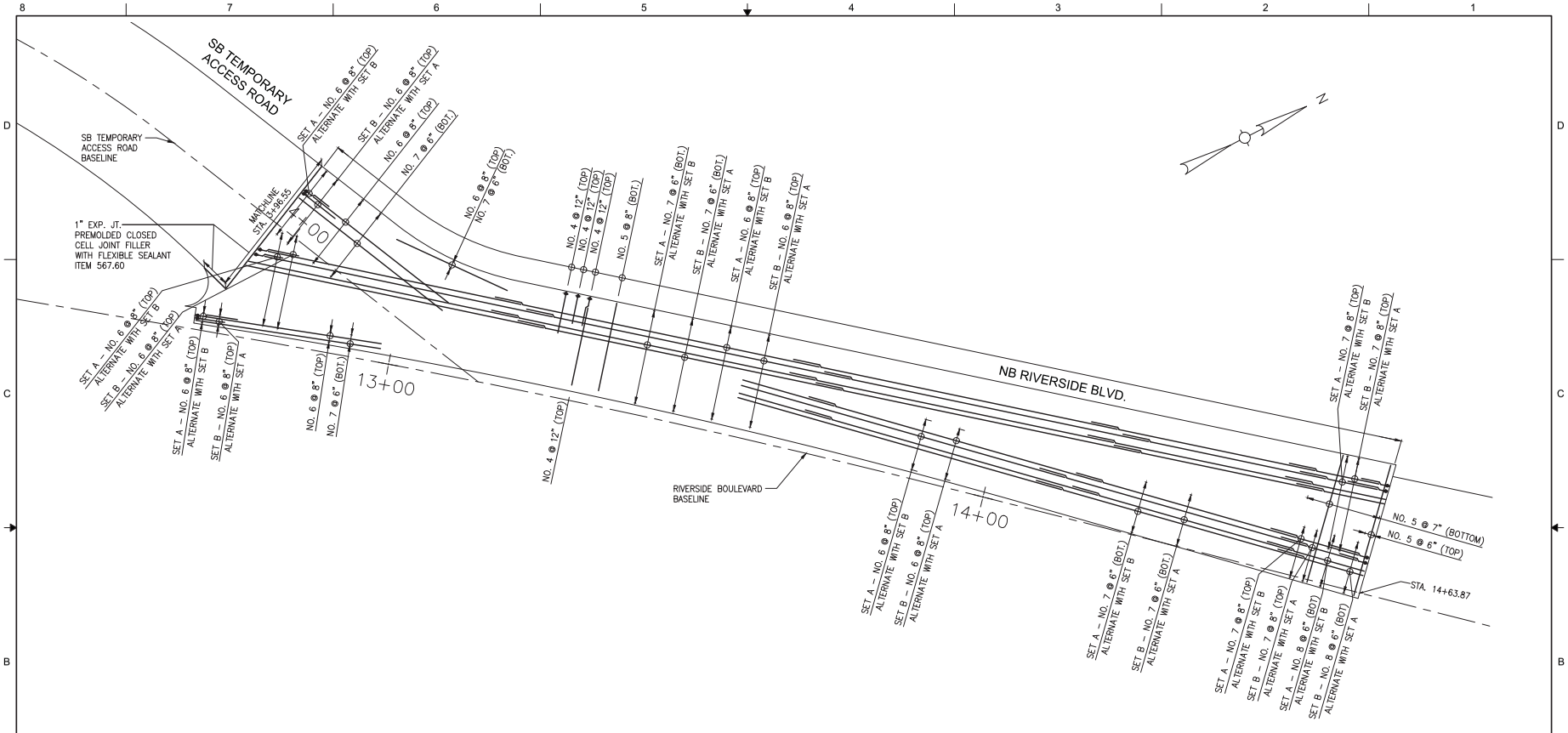

NOTES:

1. REINFORCEMENT SPLICE TABLE:

BAR SIZE	REQUIRED LAP SPLICE LENGTH
#5	2'–8"
#6	3'–6"
#7	4'–7"

2. SET "A" AND SET "B" ALTERNATE THE REINFORCEMENT SPLICE LOCATIONS IN THE DECK SLAB.

REFERENCES:

1. FOR DECK SECTIONS AND DETAILS, SEE DWG NOS ST–38 TO ST–40.

2. FOR REINFORCEMENT/COVER, SEE DWG NO. GN–1.

The RBA Group — ENGINEERS • ARCHITECTS • PLANNERS
27 UNION SQUARE WEST
NEW YORK, NEW YORK 10003

0 1 2 3 4
ORIGINAL SIZE IN INCHES

PREPARED BY: THE RBA GROUP
IN CHARGE: LR — DRAFTER: RJF
DESIGNER: WS — CHECKER: WS

CONTRACT NO. — CD NO. M79

TEMPORARY ACCESS ROAD
RIVERSIDE BOULEVARD
WEST 59TH STREET TO WEST 61ST STREET
BOROUGH OF MANHATTAN

DECK PLAN - II

DWG. NO.	SCALE	DATE	SHEET
ST-37	1" = 8'	09-15-2014	42 OF 68

RBA - RIVERSIDE BOULEVARD - TEMPORARY ACCESS ROAD
FILE: TAR_DECKPLAN_SEC3

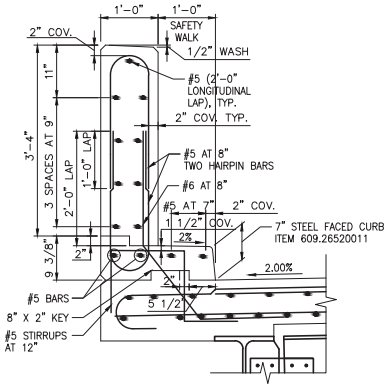

DETAIL 'A'
CONCRETE PARAPET
SCALE 1"=1'-0"

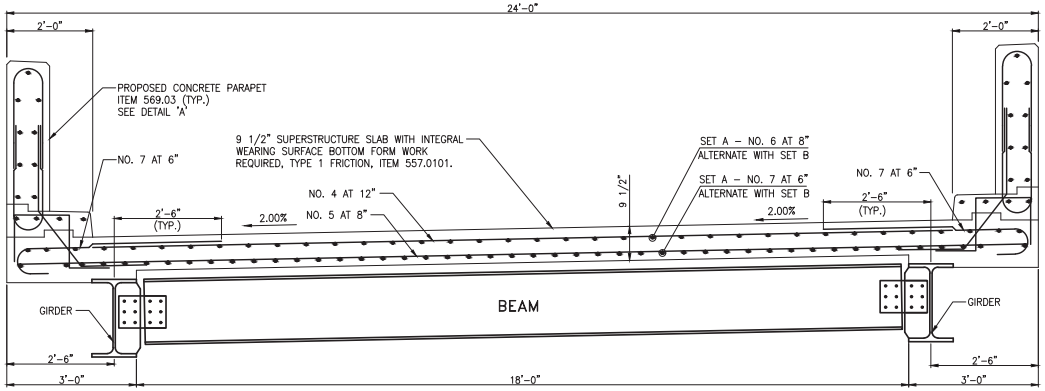

STRUCTURE SECTION 2 – TYPICAL SECTION (LOOKING NORTH)
SB RAMP RIVERSIDE BLVD. STA 2+96.33 TO STA 3+96.46
SCALE 3/4"=1'-0"

NOTES:

1. ALL REINFORCING BARS SHALL BE "EPOXY-COATED BAR REINFORCEMENT FOR STRUCTURES", ITEM 556.0202.
2. ROADWAY SURFACE OF DECK SLAB AND SIDEWALK OF THE BRIDGE SHALL BE COATED WITH PROTECTIVE SEALER FOR STRUCTURAL CONCRETE, ITEM 559.18960118.

REFERENCE:

1. FOR DECK PLAN, SEE DWG. NO. ST-36.

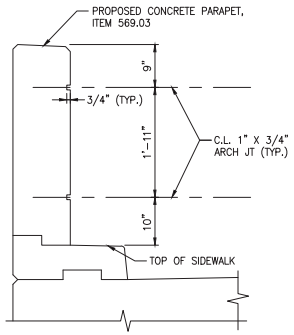

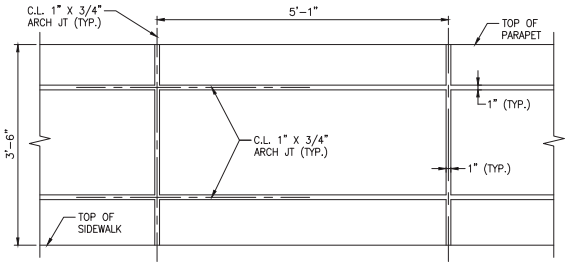

NOTE:
COST OF JOINTS TO BE INCLUDED IN THE UNIT BID PRICE CONCRETE FOR STRUCTURES CLASS HP.

PARAPET ARCHITECHTURAL TREATMENT
SCALE 1"=1'-0"

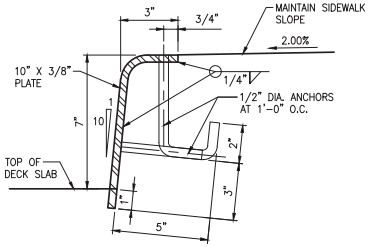

CURB DETAIL AT
CONCRETE SIDEWALK
N.T.S.

CONTRACT NO.	CD NO. M79

TEMPORARY ACCESS ROAD
RIVERSIDE BOULEVARD
WEST 59TH STREET TO WEST 61ST STREET
BOROUGH OF MANHATTAN

DECK SLAB SECTION - I

DWG. NO.	SCALE	DATE	SHEET
ST-38	AS SHOWN	09-15-2014	43 OF 68

The RBA Group ENGINEERS • ARCHITECTS • PLANNERS
27 UNION SQUARE WEST
NEW YORK, NEW YORK 10003

0 1 2 3 4
ORIGINAL SIZE IN INCHES

PREPARED BY THE RBA GROUP
IN CHARGE LR DRAFTER RJF
DESIGNER WS CHECKER WS

RBA - RIVERSIDE BOULEVARD - TEMPORARY ACCESS ROAD
FILE: TAR_DECSEC