YOUR BEST CHOICE FOR HANDS-ON-ELECTRONICS

www.poptronics.com NOVEMBER 2002

Poptronics®

Formerly Popular Electronics® and Electronics NOW

BUILD THE FRISKER

Sniff out metallic contraband with this hand-held device

SPECIAL REPRINT

Theremin Part II

Recreate sounds from the Beach Boys to Led Zeppelin

Also Inside:

- RF Modulation
- Surfing Safe And Secure
- Laser Diode Experiments
- PIC-Controlled DC Motors
- Recording TV On Your PC

$4.99 U.S.
$6.50 CAN.

#BXBDCCH **********AUTO**3-DIGIT 210
#21046DHM951RD007# TRON 204
3 S93 P294 MAY 2003
ROBERT DAHM
9515 RED RAIN PATH
COLUMBIA MD 21046-2073

www.americanradiohistory.com

RAMSEY

GET THE NEW CATALOG TODAY!

New Kits, New LPFM, New Cameras

NEW! ***www.ramseykits.com***

35 WATT LPFM STEREO TRANSMITTER

- ✓ 35W RF output, VSWR protected
- ✓ Automatic audio & power controls
- ✓ Digital synthesized PLL
- ✓ Full front panel control
- ✓ 110/220VAC, 12VDC operation

NEW!

Whether your application is export or LPFM, the PX1 has you covered. From the over-rated continuous duty power supply & power amplifier to the 2 line vacuum fluorescent display, your station will be the easiest to setup and the most reliable for continuous operation. Full microprocessor controls provide a "virtual engineer". Check out www.highpowerfm for full details.

PX1	35W Professional FM Stereo Transmitter	$1,795.95

ELECTROCARDIOGRAM HEART MONITOR

- ✓ Visible and audible display of your heart rhythm
- ✓ Re-usable sensors included; just like visiting the hospital!
- ✓ Bright LED "beat" indicator
- ✓ Monitor output for oscilloscope display

NEW!

Enjoy learning about the inner workings of the heart while covering the stage by stage electronic circuit theory of ECG/EKG systems. Be heart smart and learn at the same time!

ECG1	Electrocardiogram Heart Monitor Kit	$34.95
CECG	Matching Case & Knob Set	$14.95
AC125	110 VAC Power Adapter	$9.95
ECGP10	Replacement Reusable Probe Patches (10-Pack)	$7.95

PLASMA GENERATOR

- ✓ Generate 2" sparks to a hand held screwdriver!
- ✓ Build your own plasma balls!
- ✓ 25KV at 20 KHz from a solid state source!

NEW!

Generate really impressive sparks, build your own plasma ball, light fluorescent tubes without wires! From a solid state source, generate over 25KV at 20KHz for the most dazzling displays!

PG13	Plasma Generator Kit	$59.95
PS12	14VAC Output Power Supply	$19.95

ION GENERATOR

- ✓ Generates negative ions with a blast of fresh air!
- ✓ 7.5KV DC negative, 400uA - that's a lot of ions!
- ✓ Steady state DC voltage, constant current, not pulsed!

NEW!

Learn the basics of ion repulsion by building this ion generator! Creates a continuous blast of fresh air charged with a ton of ions. Perfect for pollution and air freshening; just smell those ions! Solid state wind generation; you'll be amazed!

IG7	Ion Generator Kit	$59.95
AC125	110 VAC Power Adapter	$9.95

TOUCH-TONE TONE GRABBER

- ✓ New-built-in RJ11 phone jack
- ✓ Large memory holds over 500 numbers
- ✓ Big bold 8 digit display, auto insertion of dashes
- ✓ New-output latch jack

NEW!

Dialed phone numbers on the radio, repeater codes, control codes, anywhere touch-tones are used, you can read and store them! All new design for 2002. Capture those tones with the TG2!

TG2	Tone Grabber Tone Reader Kit	$59.95
CTG2	Matching Case & Knob Set	$14.95
AC125	110 VAC Power Adapter	$9.95

RCA TO XLR AUDIO CONVERTER

- ✓ Connect consumer outputs to XLR inputs
- ✓ Left & right audio gain adjustments

NEW!

So you're trying to connect consumer audio outputs with RCA connectors (unbalanced) to XLR (balanced) inputs. Always a problem...Not anymore with the R2XL1!

R2XL1	Unbalanced to Balanced Audio Converter Kit	$49.95
CR2XL	Matching Case & Knob Set	$14.95
PWR25	12VAC Power Adapter	$9.95

AUTOMATIC COLOR/BW IR CAMERA

- ✓ Color during the day, IR B&W at night!
- ✓ Automatically turns on IR Illumination!
- ✓ Waterproof to IP57 standards!
- ✓ Black anodized housing with universal mount

NEW!

Best of both worlds! This video camera is a waterproof COLOR camera during the day. When the light level drops, it automatically changes to B&W and turns on its built-in IR illumination, with 10 IR LEDs. Powered by 12VDC and terminated with a professional BNC connector. B&W only model also available if color is not needed. Both in heavy anodized black housing.

CCD309	Color/B&W IR Waterproof Bullet Camera	$169.95
CCD308	B&W IR Waterproof Bullet Camera	$109.95
AC125	110 VAC Power Adapter	$9.95

MINI B&W CAMERA WITH IR ILLUMINATION

- ✓ Built in IR illumination!
- ✓ Sees in total darkness!
- ✓ Black aluminum housing with swivel bracket

NEW!

What a deal! This miniature B&W video camera has 6 high power IR LEDs built into it to provide illumination in total darkness! No need for external IR illuminators. Attractive black aluminum housing easily mounts at any angle with the built-in swivel bracket. Runs on 12VDC, and includes professional BNC output plug-in harness.

CCD303	Mini B&W IR Illuminated Camera	$59.95
AC125	110 VAC Power Adapter	$9.95

Check out all our other new cameras at www.ramseykits.com!

PROFESSIONAL FM STEREO RADIO STATION

- ✓ Synthesized 88 to 108 MHz with no drift !
- ✓ Built-in mixer – 2 line inputs and one microphone input!
- ✓ High power module available for export use
- ✓ Low pass filter for great audio response

Our FM100 is used all over the world by serious hobbyists as well as churches, drive-in theaters, and schools. Frequency synthesized PLL assures drift-free operation with simple front panel frequency selection. Built-in audio mixer features LED bargraph meters to make setting audio a breeze. The kit includes metal case, whip antenna and built-in 110 volt AC power supply.

FM100	Super-Pro FM Stereo Radio Station Kit	$249.95
FM100WT	1 Watt, Wired Export Version	$399.95

SYNTHESIZED FM STEREO TRANSMITTER

- ✓ All new design & features for 2002!
- ✓ Fully adjustable RF output

NEW!

Our #1 kit for years has just gotten better for 2002! Totally redesigned, the FM25B has all the features you've asked for. From variable RF output, F connector RF output jack, line input, loop output, and more. Includes case, power supply, whip antenna, audio cables.

FM25B	Synthesized FM Stereo Transmitter Kit	$129.95

AND...OUR FAMOUS *MINI-KITS*

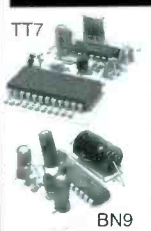

These are easy to build kits that can be used either stand-alone or as building blocks for more complex projects.

TS4	Tickle-Stick Shocker	$9.95
BN9	Super Snoop Amplifier Kit	$8.95
BL1	LED Blinky Kit	$3.95
TD1	Tone Encoder/Decoder Kit	$6.95
TT7	Touch Tone Decoder Kit	$19.95
CPO3	Code Practice Oscillator Kit	$9.95
UT5	Universal Timer Kit	$8.95

RAMSEY ELECTRONICS, INC.

793 Canning Parkway
Victor, NY 14564
716-924-4560
sales@ramseykits.com

VISA

Order Today! 800-446-2295

www.ramseykits.com

CIRCLE 240 ON FREE INFORMATION CARD

www.americanradiohistory.com

Electronics Now

November 2002, Vol. 3, No. 11

Popular Electronics®

Poptronics®

THE MAGAZINE FOR THE HANDS-ON ELECTRONICS ACTIVIST!

FEATURES

THE FRISKER ..... *William Sheets and Rudolf F. Graf* 21
Sniff out metallic contraband with this hand-held detector.

BUILD THIS THEREMIN, PART II ..... *John Simonton* 27
Finishing up and fine-tuning the theremin project that began last month.

PRODUCT REVIEWS

GIZMO® 7
Catch up on the latest trends in consumer electronics, from surveillance to surround sound.

DEPARTMENTS

COMPUTER BITS ..... *Peter Pietromonaco* 10
Surf the Net safe and secure, sidestep past spam, and learn about security and anonymity.

PEAK COMPUTING ..... *Ted Needleman* 12
With the right combination of hardware and software, you can digitally record TV programming with your PC.

SURVEYING THE DIGITAL DOMAIN ..... *Reid Goldsborough* 14
There's all sorts of tips available online for tweaking your system and interacting with cyberspace.

ALL ABOUT ..... *William Sheets and Rudolph F. Graf* 16
This month's topic, modulation, is a must-know for RF aficionados and electronic buffs, alike.

Q&A ..... *Dean Huster* 37
Conducting phone-tap sweeps, o-scope construction, tesla coils, and much more are discussed.

PIC-TRONICS ..... *TJ Byers* 41
Here is how to implement a PIC-controlled DC motor in your next project.

AMAZING SCIENCE ..... *John Iovine* 44
We bring you the fifth and final installment of the bi-ped walker robot.

SERVICE CLINIC ..... *Sam Goldwasser* 49
In no time at all, you'll be salvaging laser diodes and constructing circuits for their use.

BASIC CIRCUITRY ..... *Charles Rakes* 53
See how diversity and ingenuity combine to form practical and reliable circuitry.

AND MORE

EDITORIAL 2
YESTERDAY'S NEWS 3
LETTERS 5
NEW GEAR 57
NEW LITERATURE 59
POPTRONICS SHOPPER 61
ADVERTISING INDEX 80
FREE INFORMATION CARD 80A

Poptronics (ISSN 1526-3681) Published monthly by Gernsback Publications, Inc. 275-G Marcus Blvd., Hauppauge, NY 11788. Second-Class postage paid at Hauppauge, NY and at additional mailing offices. One-year, twelve issues, subscription rate U.S. and possessions $24.99, Canada $34.81 (includes G.S.T. Canadian Goods and Services Tax Registration No. R125166280), all other countries $35.99. Subscription orders payable in U.S. funds only, International Postal Money Order or check drawn on a U.S. bank. U.S. single copy price $4.99.
Copyright 2002 by Gernsback Publications, Inc. All rights reserved. Hands-on Electronics and Gizmo trademarks are registered in U.S. and Canada by Gernsback Publications. Inc. Poptronics trademark is registered in U.S. and Canada by Poptronix, Inc. and is licensed to Gernsback Publications, Inc. Printed in U.S.A. Can reprint only with written permission.
Postmaster: Please send address changes to Poptronics, Subscription Dept., P.O. Box 459, Mount Morris, IL 61054-7629

A stamped self-addressed envelope must accompany all submitted manuscripts and/or artwork or photographs if their return is desired should they be rejected. We disclaim any responsibility for the loss or damage of manuscripts and/or artwork or photographs while in our possession or otherwise.

As a service to readers, Poptronics publishes available plans or information relating to newsworthy products, techniques, and scientific and technological developments. Because of possible variances in the quality and condition of materials and workmanship used by readers, Poptronics disclaims any responsibility for the safe and proper functioning of reader-built projects based upon or from plans or information published in this magazine.

www.americanradiohistory.com

Poptronics®

Larry Steckler, EHF, CET,
editor-in-chief and publisher

EDITORIAL DEPARTMENT
Chris La Morte, managing editor
Evelyn Rose, assistant editor
Maria Orlando, assistant editor

CONTRIBUTING EDITORS
TJ Byers
Reid Goldsborough
Sam Goldwasser
Rudolf F. Graf, KA2CWL
Dean Huster
John Iovine
Ted Needleman
Peter Pietromonaco
Charles D. Rakes
Marc Spiwak
William Sheets, K2MQJ

PRODUCTION DEPARTMENT
Kathy Campbell, production manager
Michele L. Musé, prepress specialist

ART DEPARTMENT
Russell C. Truelson, art director
Michele L. Musé, graphic artist

CIRCULATION DEPARTMENT
Gina Giuliano, circulation manager

REPRINT DEPARTMENT
Maria Menichetti, Reprint Bookstore x235

BUSINESS AND EDITORIAL OFFICES
Gernsback Publications, Inc.
275-G Marcus Blvd.
Hauppauge, NY 11788
M-F 8:30 AM - 4:30 PM EST
631-592-6720
Fax: **631-592-6723**
President: **Larry Steckler**
Vice-President: **Adria Coren**
Vice-President: **Ken Coren**

SUBSCRIPTION CUSTOMER SERVICE/ ORDER ENTRY
800-827-0383
7:30 AM - 8:30 PM EST

Advertising Sales Offices listed on page 80

Cover by Michele Lyn Musé

VISIT US ON THE INTERNET AT:
www.gernsback.com
or www.poptronics.com

Since some of the equipment and circuitry described in POPTRONICS may relate to or be covered by U.S. patents, POPTRONICS disclaims any liability for the infringement of such patents by the making, using, or selling of such equipment or circuitry, and suggests that anyone interested in such projects consult a patent attorney.

Lost In Space?

It was back in August that NASA attempted to fire the engines of its CONTOUR spacecraft, but to no avail. Controllers could neither contact the vessel, nor did the vessel attempt to automatically contact control, as it was programmed to do in case of a failure. Nearly two weeks after the incident, Chief Engineer Theron M. Bradley Jr. was appointed as the leader of an investigation unit that has been tasked to find out what exactly happened. An earth-based observatory spotted three objects within the guesstimated region of the craft, and this has led to the belief that the CONTOUR broke apart. Now, I know my readers can empathize with a team who has just lost their project to some unexplained (as of this printing) glitch. How many times have we built a prototype, with care, precision, and passion, only to see it either not work at all, or destroy itself in a fit of mechanic mayhem? Unfortunately, the apparent destruction of the CONTOUR also marks the destruction of some pretty nifty ancillary equipment. These included a high-tech dust sampler and a spectrometer to measure trace elements. The CONTOUR was designed to chase comets, observe them up close, and beam back the data. Many non-techs and adversaries of space exploration whined in unison once they found out how much money was inadvertently lost, and they even went as far as to suggest that funding should be stopped. Luckily, the powers that be understand the need for the exploration of space, and how important it is that we learn more about the relationship of our planet to the rest of the solar system. This includes chasing comets, which have a direct impact on our environment (especially our oceans and atmosphere). So, it is with a somber "via con debris" that we say goodbye to the CONTOUR spacecraft.

Enjoy,

Chris La Morte
Managing Editor

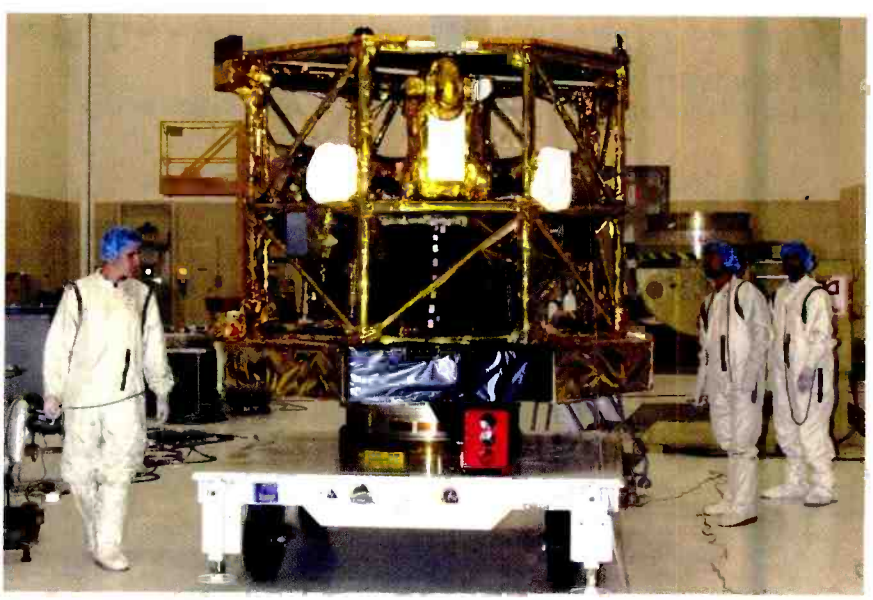

Visit www.contour2002.org

www.americanradiohistory.com

YESTERDAY'S NEWS

A PEEK INTO THE GERNSBACK ARCHIVES

1900

1910

1930

1940

1952

1960

1972

1980

1992

2000

Dateline: November 1952 (50 years ago)

Magnetic tape TV recording is almost here—a milestone in the television industry—and discussed in **Radio Electronics'** editorial. The cover feature is a transistor-operated sawtooth oscillator that functions as a signal source for testing others. A bit of trivia: 2,517,157 TV sets had been produced during the first seven months of the year, along with 5,280,079 radio sets and 1,639,097 auto radios.

Dateline: November 1972 (30 years ago)

"Looking Ahead" in this month's **Radio Electronics** reports that more than 10% of the nation's homes are receiving television by cable. Western Electric is producing lithium tantalate crystals, the first practical alternative to quartz for use in communications equipment. Building R-E's Grinchwal digital test equipment makes the cover story; and Volkswagen introduces computerized self-analysis, for automotive diagnosis, to the auto industry.

Dateline: November 1992 (10 years ago)

Looking to install your own telephone system? Refer back to this issue of **Popular Electronics**. Construction articles cover a voice-mail alert system, a 49-MHz FM transmitter, and a one-amp current injector. An instant replay multi-standard VCR, roadmap software for the PC, and a universal remote control are all in the "Gizmo" product review.

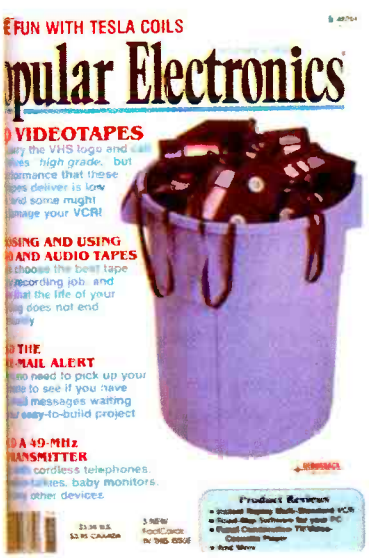

www.americanradiohistory.com

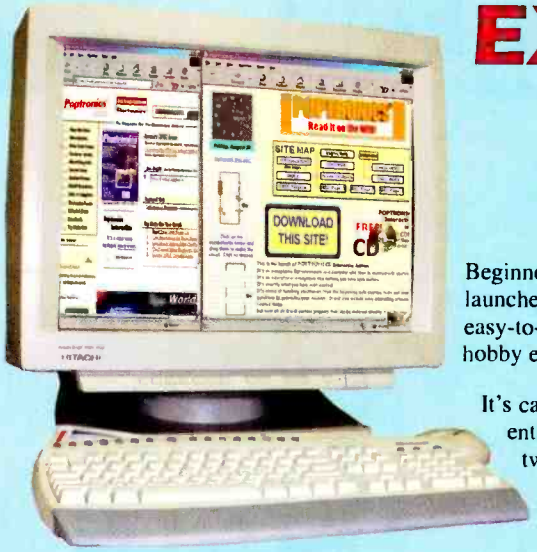

EXCITING NEWS!

POPTRONICS Interactive Edition

Beginners to electronics now have a new medium to help them. **POPTRONICS** has launched a new e-magazine on the Web, aimed at covering basic electronics with easy-to-understand theory and lots of construction projects. Now you can enjoy your hobby even more!

It's called **POPTRONICS Interactive Edition** and will be released each month, entirely on the Web. This fantastic new concept has been in the design-stage for two years and now the first issues are on the site for viewing! Each month the site will increase with a range of articles and projects. Everything will be linked for easy access and navigation. Get in on the ground floor and visit the site now...

Type the following into your browser: *www.poptronics.com/interactive/ intro.html*. There are sample pages and articles so you can see how we have laid things out and what's in store. It's very easy to navigate. It's like sitting down and reading a magazine, but with the impact of full-color and interactive features such as circuits that move and self-scoring tests. The site will contain many different sections and everything will be based on a "learning approach."

The first issues of the e-magazine will cover the basics of electronics, and in this way, everyone will be brought up to the "starting-line."

POPTRONICS Interactive Edition will also present complex projects as well, so everyone will be catered to. As with any course, projects will be offered at every stage; and these can be purchased by simply clicking the "**Buy Me**" button at the side of the article and a couple of clicks gets the kit(s) to you very quickly.

New sections will be constantly added, and the first issues include a **Basic Electronics Course,** a **PIC Microcontroller Programming Course** and the basics of **electroluminescent emission.**

The **Basic Electronics Course** starts with a new approach. Mathematics has been kept to a minimum and components are introduced via simple circuits. An on-line calculator for resistors and capacitors (in parallel and series), as well as an easy-to-use color code calculator for 4- and 5-band resistors, helps identify these important components. The **Basic Electronics Course** continues with circuits that "move" so you can see how a technician "sees" a circuit operating. You must be able to see how a circuit works if you want to work on it successfully. Basic circuits are called "Building Blocks." As your knowledge of these "blocks" increases, you will be able to design your own circuits.

The **PIC Microcontroller Programming Course** also starts with the basics and has a complete Library of Terms. The microcontroller we have chosen is the PIC16F84, as this is re-programmable so a project can be "up-and-running" at very little cost.

A low-cost programmer is available, as well as prototyping boards and a display project with more than 28 experiments. They are designed to reinforce your understanding. After carrying out the experiments in the **5 × 7 Display** project, you will be well on your way to understanding PIC language.

The **Electroluminescent Emission** section introduces electroluminescent material in a flat format, as well as tubular material. By combining our driver projects with the wide variety of shapes and colors of electroluminescent material, you can create displays for model-railway layouts, promotional displays, or anything that needs illumination. You can also combine **fiber-optics** into the display to get even more stunning effects. All the materials and kits for the projects are available via the Order Form in the article, so you are not left "up-in-the-air" when it comes to putting your ideas into practice.

Everything on the website is linked. Simply type *www.poptronics.com/interactive/intro.html* into your browser, and everything else is just a click away. Sample pages and projects are viewable for FREE, while the remainder of the site requires a password. To obtain a password, you will need to subscribe.

SUBSCRIPTION RATES:

A subscription to **POPTRONICS Interactive Edition** costs **$19.95** for 12 issues. This allows unlimited viewing and downloading. Alternatively you can take a 2-issue trial subscription for **$3.99.** A new issue will be available on the first day of each month. Many of the articles, tables and data sheets will be linked to keep information "at hand," so it's important to keep your subscription current as you will be constantly referring to the site. If you are already a subscriber to **POPTRONICS,** a special offer is available. Simply quote your **POPTRONICS SUBSCRIPTION NUMBER** (located on your subscription label) when subscribing, and you will only have to pay **$9.99** for a 12-issue subscription. A two-issue trial subscription costs **$1.99**.

POPTRONICS will remain in its printed format. The material and content of **POPTRONICS** and **POPTRONICS Interactive Edition** will be kept separate; and if you are into electronics, you will want both versions. Log on to **POPTRONICS Interactive Edition** now. You will be amazed at the content and layout.

www.americanradiohistory.com

LETTERS

mailto: letters@gernsback.com

Feedback

Hello, folks. I guess it has been some time since we've last seen "Letters" in these parts, so now's as good a time as any to reinstate some feedback. After all, what our readers have to say is important. Your letters are like a metric that is used to gauge the performance of the magazine. If we do something good, you'll tell us; and if we do something silly, you'll tell us twice. So, once again, we give the floor to the readers. First up is a fledgling engineer who is perhaps our youngest reader. Check out his picture on this page. No doubt this technical tyke is destined for success, armed with his trusty copy of ***Poptronics*** *and an enormous power tie.—Editor*

Here is one-year old Tian Snyman relaxing with a brightly colored issue of ***Poptronics****.*

A Well-Groomed Engineer

My Daddy and I love your magazine! Thanks for all the ideas and information! I learn so much every day.
TIAN SNYMAN, future electronic genius
Melbourne, FL

Glad to hear you enjoy our magazine, Tian. Many hobbyists are growing concerned that electronics is a dying pastime ever since computers took over the spotlight. Yet, as long as we have parents like T.J. and Ana Snyman, who know how to nurture their children on quality print media, all is well for the hobby. Although, Ana admits that Tian likes to look at the schematics mostly. —Editor

I Made a Misnake

Stanley Clarke? Does he live anywhere near the Great Pyramid?
A DISAPPOINTED SUBSCRIBER
via e-mail

Mike Eck offers this formula: Stanley Kubrick + Arthur C. Clarke = Stanley Clarke

Yes, indeed! This was a classic cross-association of semantics. We have director, writer, and musician all jumbled together. Ah, to err is human. I am happy to see that readers of our magazine know their way around the Speculative Fiction (dare I say Sci-Fi) aisle.—Editor

Circuit Suggestion

I am a devoted reader of **Poptronics**. May I suggest the development of a "Vibration Analyzer" circuit based on a PIC? This circuit could be very interesting and useful. Thank you.
EDUARDO ESQUIVEL
Peru

We'll see what we can do, Eduardo. Until then, take a look at T.J. Byers monthly "PIC-tronics" column for interesting and useful projects that are controlled by one of the most popular lines of microcontrollers. Also, take a peek at ***Poptronics Interactive*** *at* www.gernsback.com. *There you'll find Colin Mitchell serving up a fine sampling of PIC-based projects.—Editor*

Remembering Grace

I met Grace [Hopper] at one of her lectures. She looked me up and down as though I were a lab specimen and, with a disapproving look on her face, said, "You're not much more than six nanoseconds tall." Then she grinned and reached out to shake hands. A feisty young lady (at heart), she had a smile that warmed you to her. She was noted for having repetitively requested, "Show me a nanosecond," until one of her cohorts gave her a piece of electric cord cut to the length of one nanosecond. My meeting with her led me to develop Tymon's NANOSTIK, and I'd like to send one to the author of this excellent article. The NANOSTIK is a plastic ruler, one nanosecond in length, marked off in 10 major divisions, each divided into ten minor divisions. It is marked, "IN MEMORY OF CAPTAIN HOPPER, USN."

KEEP IN TOUCH

We appreciate letters from our readers. Comments, suggestions, questions, bouquets, or brickbats ... we want to hear from you and find out what you like and what you dislike. If there are projects you want to see or articles you want to submit—we want to know about them.

You can write via snail mail to:

Letters
Poptronics
275-G Marcus Blvd.
Hauppauge, NY 11788

Sending letters to our subscription address increases the time it takes to respond to your letters, as the mail is forwarded to our editorial offices.

Our e-mail address can be found at the top of the column.

Of course, e-mail is *fast*.

All of our columnists can be reached through the e-mail addresses at the head of each column.

And don't forget to visit our Web site: *www.gernsback.com*.

www.americanradiohistory.com

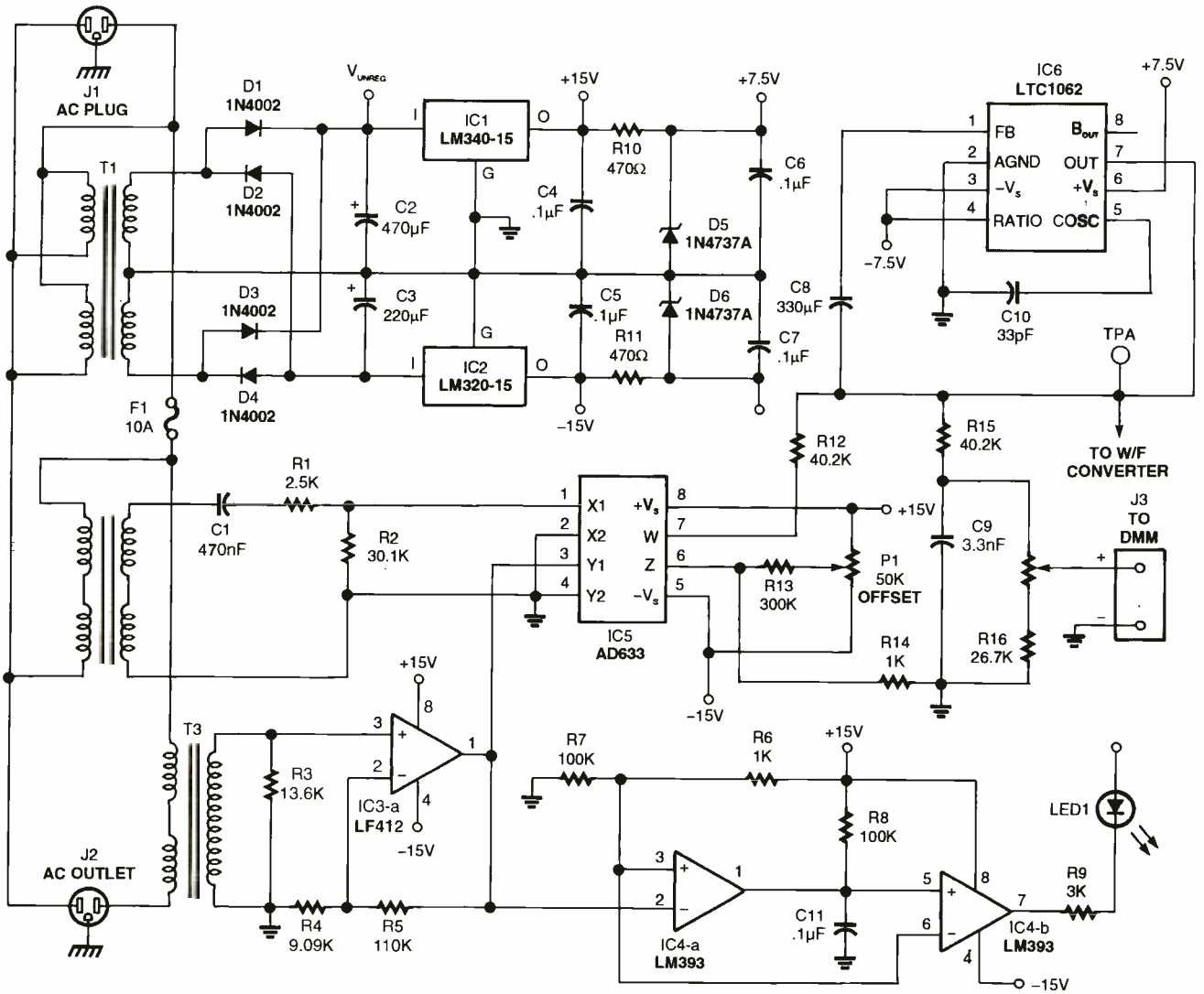

Fig. 1. This is the corrected schematic for the "Watt/Hour Meter" that originally ran in the April 2002 issue of **Poptronics**.

FRANK TYMON
Quartz Hill, CA

Tube Talk

As a lifelong (46 years and counting) electronics hobbyist and professional, I enjoy your publication immensely. I noted that the schematic for the "Tubester" on page 24 of July 2002's issue shows one error and one omission. The battery polarities for the positive and negative nine-volt stacks for the ICs and the 6F5 tube are reversed in the drawing. The connection to pin four of IC1 is also supposed to go to the negative nine-volt connection, but it is unlabeled. My compliments go out to the author in his mix of old and not-so-old technology into an interesting project. Warmest tropical regards.
PAUL R. DEDRICK, CET, CSM, A+
via e-mail

If you check your tube manual, you'll find that a 6F5 heater draws 300 mA, not the 150 mA stated. As always, I enjoy the magazine and have been reading Gernsback Publications since the Shortwave Craft and Radio Craft days.
BLAKE HAWKINS, N4YCQ
via e-mail

Thank you both for your insight.—Editor

Transistor Test

In the July 2001 "Q and A" column there was a question about identifying transistor base, collector, and emitter leads. I have frequently used an ohmmeter for that purpose. The base/collector diode is slightly more conductive than the base/emitter diode. On an analog ohmmeter it is usually about a needle's width lower for the base/collector diode. With a digital ohmmeter it is harder to observe the difference. I recently measured a 2N4403 and the readings were .670 and .671 using the diode-test setting. You will have to repeat the test several times in order to notice the difference.
STEVE WHITESIDE, Ph. D., EE
via e-mail

Watt/Hour Meter Corrections

This is in reference to the April 2002 **Poptronics** issue. I became very interested in building the "Watt/Hour Meter" in that issue; however, at the time I was a student and did not have much free time. Now that I started looking at the schematic closer, I have noticed errors.
JEREMY MILLER
Fargo, ND

Thank you for your keen eye and attention to detail. We have incorporated your findings in the corrected schematic on this page.—Editor P

www.americanradiohistory.com

GIZMO®

For more information go to page 80A

or e-mail: requests@berkshire-is.com

Find Your Way

Never get lost again! The *Handheld Electronic Compass* ($47.95), featuring patented magnetic sensor technology originally developed for the military, is rugged and reliable—ideal for outdoor and marine use. It comes with clock, timer, stopwatch function, and reference-pointer electronic calibration. Water resistant to ten feet, the compass features a large, easy-to-read display and sounds a warning when there's magnetic interference.

Scientifics, Dept. AO21-C999, 60 Pearce Ave., Tonawanda, NY 14150-6711; 800-728-6999 or 716-874-909; *www.scientificsonline.com.*

CIRCLE 50 ON FREE INFORMATION CARD

Triple Tough

Designed for the great outdoorsman, the *Pathfinder Triple Sensor Tough Solar Watch* ($250) is a valuable piece of gear for mountain climbing, trekking, and other extreme outdoor activities. Not only does the watch tell time, but it is equipped with a special triple-sensor system that identifies direction, altitude, and important weather data. One especially cool feature—the back-light inclination sensor automatically switches on whenever the user bends his arm to check the watch.

Casio, Inc., 570 Mt. Pleasant Ave., Dover, NJ, 07801; 973-361-5400; *www.casio.com.*

CIRCLE 52 ON FREE INFORMATION CARD

Sound In Style

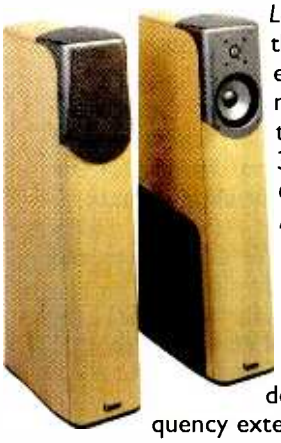

A fine blend of technology and craftsmanship, the *Infinity Kappa 600 Loudspeakers* ($1199 each) are three-way floorstanding speakers that deliver full-range performance in sophisticated home-theater and music systems. Measuring 38 × 8⅞ × 17 inches, the Kappa 600's all-C.M.M.D. (Ceramic Metal Matrix Diaphragm) driver complement includes a 1-inch tweeter, 6½-inch midrange, and 8-inch side-firing woofer. The system reproduces music with clear, extended high frequencies to 27 kHz, and open, detailed mid-range, and low-frequency extension down to 30 Hz.

Infinity Systems, 250 Crossways Park Drive, Woodbury, NY 11797; 800-553-3332; *www.infinitysystems.com.*

CIRCLE 51 ON FREE INFORMATION CARD

Ultra-Sonic

Experience supreme sound quality and Dolby Digital technology through these *900-MHz Wireless Surround Sound Headphones* ($299.99). Compatible with both digital and analog audio/video equipment, the headphones promise sonic detail virtually identical to that of a movie theater. The signal transmits up to 300 feet, through walls, floors, and ceilings; and the batteries hold the charge for more than six hours at a time.

Acoustic Research, 2950 Lake Emma Rd., Lake Mary, FL 32746; 800-732-6866; *www.acoustic-research. com.*

CIRCLE 53 ON FREE INFORMATION CARD

Dream-Loungers

Hand-built, the *DreamLounger Home Theatre Seating* collection—*the Jazz Recliner/Rocker* ($1700), *the Cruiser* ($2700), and *the Montreal*, leather ($2180)—comes standard with a 22-inch wide seat, offering both comfort and style. Each lounger boasts unique features: The contemporary-looking Jazz reclines or rocks according to preference; the low-riding Cruiser has a matching ottoman; and the Montreal is covered in plush leather with ultra lumbar and head support.

Theatre Design Associates, 2224 W. Fulton, Chicago, IL 60612; 800-786-6832 or 312-829-8703; *www.theatredesign.com.*

CIRCLE 54 ON FREE INFORMATION CARD

www.americanradiohistory.com

Sky Surfers

Fly away! With a 30-inch wingspan and individually controlled strut-mounted propellers, the *Power Air Surfer Radio Control Airplane* ($50) can soar as high as 100 feet and as far as 300 feet. Easy to launch and land, the plane is perfect for beginners or advanced R/C pilots—with practice it can do dives, barrel rolls, spirals, and spins. The plane also comes in two different styles, has two on-board motors, a portable field charger, and a unique wing design that prevents most crashes.

Hasbro, Inc. 1027 Newport Ave., P.O. Box 1059, Pawtucket, RI 02862-1059; 401-725-8697; *www.hasbro.com*.

CIRCLE 55 ON FREE INFORMATION CARD

Power Tower

Taking up barely a square foot of space, this *DVD Power Tower* ($169.95) organizes up to 80 DVD movies in their cases. Turn the switch on and your entire collection rotates 360 degrees right or left, fanning the front, back, and spine of each DVD for easy selection. Even better—when the motor is activated, a built-in, ultra-bright LED lamp illuminates the case in a darkened room, and then automatically turns off about 20 seconds after rotation stops.

The Sharper Image (stores in 28 states and Washington, DC); P.O. Box 7031, San Francisco, CA 94120-9703; 800-344-4444; *www.sharperimage.com*.

CIRCLE 57 ON FREE INFORMATION CARD

Super Sets

Offering a smooth, crisp picture and enhanced, high-tech audio, the 34-Inch Flat-Tube Direct-View *RCA Scenium D34W135D TV* ($2599) features a built-in DVD player. The monitor has an exclusive, decorative Clip-On Frame—easily snapped on to the face of the TV—that allows you to change the cabinet design according to your room decor. It also comes with Virtual Dolby Surround capability, secure digital DVI-HDTV inputs, and dual Syncroscan HD component video inputs.

Thomson Multimedia, 10330 N. Meridian St., Indianapolis, IN 46290; 317-587-4450; *www.rca.com*.

CIRCLE 56 ON FREE INFORMATION CARD

Eye Spy

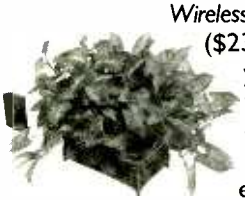

Planning a sting operation or want to check on your babysitter? This *Remote-Control Activated Wireless Surveillance Camera* ($2395) is just what you need to observe your subject without he/she having a clue. Disguised as either a plant, clock, or smoke detector, the camera can be charged and placed in the area you'll be monitoring. When the subject enters the area, just hit the button on the remote and begin transmission. The package comes with camera, recorder, receiver, and color monitor.

AI Surveillance. 383 West Route 59, Spring Valley, NY 10977; 845-371-3333; *www.aisurveillance.com*.

CIRCLE 59 ON FREE INFORMATION CARD

Short and Sweet

For use at your bedside or anywhere in your home or office, the *Boston Acoustics AM/FM Radio* ($150) has a maximum of 19 presets, as well as alarm capabilities. Available in white or silver/gray and designed to be competitive with the Bose Wave, this compact radio boasts great reception, precision tuning, and superb sonic performance.

Boston Acoustics, 300 Jubilee Dr., Peabody, MA 01960; 978-538-5000; *www.bostonacoustics.com*.

CIRCLE 58 ON FREE INFORMATION CARD

www.americanradiohistory.com

PC Protection

Shield yourself from dangerous viruses, malicious hackers, intrusive cookies, and annoying Internet ads with the *ZoneAlarm Pro 3* ($39.99). This complete security solution provides solid protection for your computer system around the clock. Pinpoint and map the origin of would-be intrusions with new, advanced hacker-tracking and stop unwanted advertising with customizable ad blocking. The program also includes powerful cookie control and enhanced MailSafe protection.

Broderbund LLC, *www.broderbund.com*.

At Your Fingertips

Staying organized couldn't be easier with the *Palm m130 Handheld* ($249). With the included bonus software, read an eBook; view Word, Excel, and PowerPoint files; create a digital photo album; beam video clips—all in the palm of your hand. The backlit, easy-to-read display supports thousands of colors to make games and photos come alive. The expansion card slot enables you to add games, applications, eBooks, and more. You can also snap on options, such as a portable keyboard.

Palm Products, *www.palm.com*.

Creative Control

You can turn your PC into a powerful multi-track recording studio with *Cakewalk Home Studio* ($129). Musicians can record unlimited audio and MIDI tracks, mix with real-time audio and MIDI effects, compose and print sheet music, and create video soundtracks. The software supports real-time DirectX effects, MIDI FX plug-ins, and more. *Pyro MP3 and CD Maker* (trial version), *Virtual Sound Canvas DXi* soft synth, *Dreamstation DXi* soft synth, and an ACID-format audio loop library are all included in the package.

Cakewalk, *www.cakewalk.com*.

Smart Storage

Now you can digitally store all your music in one place with the *iPac Music Center* ($399). This 17-inch home-audio component uses PC intelligence to record and store your entire digital and analog music collection in MP3 format. It has enough capacity for nearly 400 audio CDs or 5000 individual songs, creates an unlimited number of custom play lists, and lets you listen to Internet radio stations from around the world.

Compaq Computer Corp., *www.compaq.com*.

Classy Camera

Portable and sophisticated, the *Digital Revio KD-400Z Camera* ($499) has a stainless steel alloy exterior, an ultra-slim body that enhances mobility, and a sliding protective lens cover. The SD Memory Card and Memory Stick Dual Memory slot allows users to easily transmit images to PCs and peripherals, including mobile phones, PDAs, and photo printers. The camera also features a high-performance 3X optical Hexanon zoom lens and ultra-high 4.13-megapixel resolution.

Konica Photo Imaging, *www.konica.com*.

G

Gizmo is published by Gernsback Publications, Inc., 275-G Marcus Blvd., Hauppauge, NY 11788. Copyright 2002 by Gernsback Publications, Inc. Gizmo is a registered trademark. All rights reserved.

www.americanradiohistory.com

PETER PIETROMONACO

mailto: computerbits@gernsback.com

Cyber Security

Let's face it. Almost all of us surf the Net, send and receive e-mails, and engage in online activity without a second thought about our privacy. Who could possibly be spying on us? Who would even care? The truth is that there are a lot of "peeping Toms" who are interested, for one reason or another, in what we are doing online.

From marketing companies to hackers, from scammers to nosy bodies, there are people who want to know about us. You can actually be tracked from your mouse clicks; and the pages you read tell those vigilant individuals just what to sell to you, what to scam from you, and countless other private things.

This article isn't meant to scare you into never going online again. Using the Internet is inevitable and necessary for most of us. The point is to make you aware and to present precautions. There are ways around the Internet "spies" and many ways to protect yourself. A little knowledge can go a long way.

E-MAIL—A DANGEROUS JOURNEY

You innocently type your personal e-mail message to a recipient miles and miles away. You think it magically appears—unscathed, unopened—on the receiving end. Not true. Once you press that SEND button, your e-mail travels from one computer to another down an undetermined path through network traffic and routers—it basically takes the scenic route, dotted with overlooks and pit-stops—until it reaches its final destination. Before the message reaches the recipient, however, it must check in at the *P*ost *O*ffice *P*rotocol (POP); where it is either delivered immediately or temporarily saved for postponed delivery.

The e-mail's journey can prove hazardous to both parties, as there are ways that a third party can scan that e-mail along its way. There's actually software that can search for keywords, names, and e-mail addresses. Any e-mails that contain something of interest can be saved and looked at later.

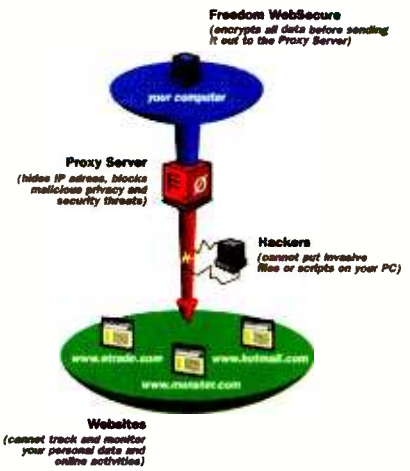

Fig. 1.This illustration, from www.freedom.net, *shows how* Freedom WebSecure *keeps information safe from hackers.*

Hackers do this all the time—either for a specific reason or just for kicks. Marketers can do this, also, to target their customers and plan their sales strategies. Later, we will get into how it's done and how to protect yourself.

E-MAIL SCAMS, SPAMS, AND MORE

I'm sure you've been spammed before and don't even know it. Sounds like you've been violated, right? Well, in a sense, you have. Spamming (which is illegal, by the way) occurs when a company pumps out thousands of e-mails (similar to junk mail) to an intended audience, selling or pitching something. Did you ever wonder how or why you are suddenly receiving e-mails advertising sporting equipment? Then you remember that just recently you purchased a set of golf clubs from a Web site.

Your name and information can spread like wildfire through the Internet. Just like they sell mailing lists and demographic lists to retailers, companies on the Web also scrutinize every move you make, examine every purchase, and pass that information on to willing buyers.

Although most spamming is completely harmless, it can be intrusive and annoying. You may have to delete dozens of e-mails every day just to organize and clear out your in-box. It's the scamming that you must beware of. Just recently I was the target of an international e-mail scam (I was actually somewhat honored that I was chosen!). Apparently some extortion group in Nigeria was trying to siphon small amounts of money from thousands of people. They would send an e-mail stating something like "If you send a check to our bank for $$$ and invest in our company, we promise so much on your return in just a few months." Now, I don't know how many folks actually fell for this, but it isn't uncommon for these con-artists to try and swindle money through the Internet. Just use common sense as you would for anything else, and you should be fine.

NOT YOUR ORDINARY COOKIE

I'm not talking about good old chocolate chip cookies. These are menacing cookies that aren't meant to be eaten. Many organizations use these "cookies" to track your every move on the Web. A cookie is a unique identifier that a Web server places on your computer (sort of like a tag that's attached to an animal in the wild to track activity and behavior). Once your identity becomes known, that one

www.americanradiohistory.com

company is free to share it with mail-order companies and anyone else willing to pay for the information. This practice could have some scary implications—just use your imagination.

There are ways to disable cookies. There is cookie-management software, or you can simply tell your browser that you don't want cookies. Before taking these steps, I would look into it a little further, as it can become somewhat complicated depending on the browser.

TAKING PRECAUTIONS

There are several things you can do to protect yourself—ranging from the very extreme action, such as encrypting your messages, to just using your head and following a few simple guidelines. We'll cover both ends.

Please take this advice and pass it on to your children and/or grandchildren. There are a few "Nevers" in the Internet world. Never give out your last name, home address, or phone number in chat rooms or on bulletin boards. Never give out your screen name, user ID, or password except to close family or friends. Never give information about yourself to anyone or any Web site if you don't feel comfortable. Companies should never ask for anything that isn't relevant to the situation or purchase at hand.

These are just a few common sense tips to follow for minimal protection. A couple of more intense security methods follow.

SOFTWARE SECURITY

There are software security packages that can protect your IP address, neutralize cookies, and generally prevent tracking of your online activity. *ZoneAlarm* (see the review in "Gizmo") and *Freedom WebSecure* are two of these programs. This privacy software acts like a shield to safeguard your personal information so you can surf the Web anonymously. It encrypts and reroutes your connection requests through proxy servers so hackers can't track you, and the programs also block potential security and privacy threats. Although the concepts the software uses—like encryption, which we will get into later—are complicated, the packages are easy enough to install and use.

FIREWALLS

In the physical world a firewall keeps a fire from spreading from one area to the next. In the computer world, a firewall is a program or hardware device that filters information coming through the Internet into your computer or network. It creates a barrier to keep hackers and offensive forces away.

These filters use several traffic-control techniques.

Packet Filtering—Packets, or small clumps of data, are analyzed through a set of filters and then sorted; and they are either sent through or discarded.

Proxy Service—Information is retrieved from the Internet by the firewall, sent to the requesting system, and vice versa.

Stateful inspection—This method compares key parts of data to a database of trusted information. It is monitored for certain characteristics and then either allowed through or discarded.

ENCRYPTION

This term sounds like something out of a spy movie, but encryption is now seen as a pretty secure way of transporting e-mail. It works something like this. When you want to send an e-mail, you type it just the way you want it. You would then hit an "encrypt" option on the mailer software, and it then mixes and re-mixes each binary bit of the message. The message can only be unscrambled by the same exact software, using the sender's private code. The receiver would then hit the "decrypt" button, type in the code, and Voila!—a readable message that only that recipient could decipher.

It seems like a big digital mess—and it is while it's in the encryption mode—but it is one of the safest, most foolproof methods of keeping your e-mail private. Of course, as with anything, there are hackers out there who will try and break the codes. Some will succeed, but it will take a lot of effort.

Encryption software has actually been around for quite some time, maybe twenty years or so. However, it wasn't as secure and tamper-proof as it is now; and it is becoming more popular because of technical improvements, efficiency, and availability.

WRAP UP

There are many books on the subject of Internet security. If you are really interested in protecting your privacy online, I would suggest doing some research first. There is a lot of information online, also. Just remember—use your head and be aware that "Big Brother" may be watching at any time.

LynX-10
HOME AUTOMATION KIT
· Software Included
· Use Existing Wiring
· Simple Inexpensive
1-800-928-5299 www.marrickltd.com

ELECTRONIC SECURITY DEVICES

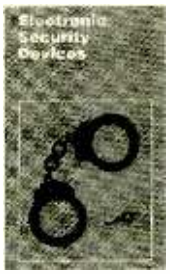

A great book for project builders. It is quite common to associate the term "Security Devices" with burglar alarms of various types. However in fact it can refer to any piece of equipment that helps to protect people or property. The text is divided into three basic sections: Chapter 1 covers switch-activated burglar alarms and includes exit and entry delays. Chapter 2 discusses other types of burglar alarms and includes Infra-Red, Ultrasonic and Doppler-Shift Systems. Chapter 3 covers other types of security devices such as Smoke and Gas Detectors: Water, Temperature and Baby Alarms: Doorphones, etc. Most circuits are simple, and stripboard layouts are provided.

To order Book BP56 and send $5.99 includes shipping and handling in the U.S. and Canada only to **Electronics Technology Today Inc.**, P.O. Box 240, Massapequa Park, NY 11762-0240. Payment in U.S. funds by U.S. Bank check or International Money Order. Please allow 6-8 weeks for delivery. ET09

Poptronics®
Interactive Edition
www.poptronics.com/interactive

THE COLLECTED WORKS OF MOHAMMED ULLYSES FIPS

#166—By Hugo Gernsback. Here is a collection of 21 April Fools Articles, reprinted from the pages of the magazines they appeared in, as a 74-page, 8½ × 11-inch book. The stories were written between 1933 and 1964. Some of the devices actually exist today. Others are just around the corner. All are fun and almost possible. Stories include the Cordless Radio Iron, The Visi-Talkie, Electronic Razor, 30-Day LP Record, Teleyeglasses and even Electronic Brain Servicing. Get your copy today. Ask for book **#166** and include **$9.99 (includes shipping and handling)** in the US (First Class), Canada and Overseas (surface mail), and order from **CLAGGK Inc., P.O. Box 12162, Hauppauge, NY 11788.** Payment in US funds by US bank check or International Money Order. Allow 6-8 weeks for delivery. MA05

www.americanradiohistory.com

TED NEEDLEMAN

mailto: peakcomputing@gernsback.com

A TV in Your PC?

If you've ever given it any thought, you'll realize that most PCs have better video capabilities than most television sets. A good quality television has about 500 lines of vertical resolution, while even a VGA-resolution computer display has 640 lines. The two aren't really directly comparable, because the TV display is mapped for the lower resolution; so it won't actually improve all that much from the increased number of displayable lines. In fact, some interpolation needs to take place so that an image designed to be displayed at 500–525 line resolution is correctly displayed at 640 lines. S-Video, such as that from a Super VHS VCR, has over 700 lines of vertical resolution and actually looks terrific on a computer display set for VGA (640 × 480) or SVGA (800 × 600) resolution.

None of the current crop of video cards has the slightest bit of trouble displaying a television transmission. If you have a large display of decent quality attached to your PC, the only thing that you really need to watch TV on your computer is a tuner that's capable of picking up broadcast or cable transmissions.

These tuners have been available for years, either completely integrated into the PC video card or as add-in cards. ATI and Matrox have both offered video cards with built-in TRV tuners, and Matrox and Hauppauge Technologies have also offered add-in TV tuners. None of these, however, have sold all that well over the years. That is, until recently.

SEE IT YOUR WAY

The spark that ignited the interest in computer TV hasn't been the availability of inexpensive large displays, though that hasn't hurt. Rather, a device from Philips called TiVO, sold under it's own and several other vendors' brands, has made PC owners aware of some of the advanced possibilities that add-in TV capabilities to your PC can offer.

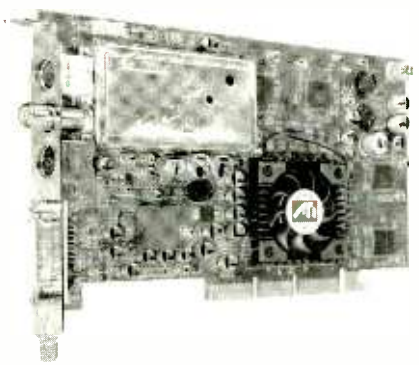

Video cards like the ATI All-In-Wonder RADEON 8500 (pictured above) can be used in conjunction with recording software in order to tape your favorite television programs.

TiVO, and a similar device from S3, are PVRs, or personal video recorders. They contain a cable-ready TV tuner, a hard disk of varying capacity, and electronics. These electronics allow you to scan a program guide, and decide what TV shows you want to watch. The PVR stores your request and, at the appropriate time, records the show in a compressed format on its internal hard disk. When you want, you can simply turn on your TV set and watch the recorded show from the PVR.

So far, the PVR doesn't sound much different from the VCR it is probably replacing, other than the ability to automatically record choices from an Internet-based guide such as GemStar's or Titan's. Where the PVR starts to strut its stuff is in the versatility it displays. TiVO can note what type of shows you like to watch, and automatically record that type of show without further user intervention. Another great feature is that you can set the device to skip commercials. Needless to say, the TV advertising industry is less than enthralled by this feature.

EASY PVR

You can get the equivalent of a TiVO box simply by adding TV Tuner capability and some software to your PC. There are several ways to do this. The simplest is to just add a video card that contains its own TV tuner. We tested two of these, a Personal Cinema card from Compro (*www.comprousa.com*), and an All-In- Wonder RADEON 8500 from ATI Technologies (*www.ati.com*). Both cards are similar in concept, with the Compro card we tested based around NVIDIA's GeForce4 Ti4200 chipset and the ATI card using ATI's own RADEON 8500 video chipset.

The Compro card, which retails for about $299, has a small green external box to which you can connect the external TV antenna or, in our case, the cable connection. This breakout box also has connectors for S-Video and composite video in and out, so you can attach a VCR or camcorder to the Personal Cinema and either output video from the tuner to a VCR or other recorder or perform video capture from an external device. The card has both analog and DVI digital output for connection to your display and comes with Intervideo's *WinDVR* for PVR functions, *WinDVD* for playing back DVDs, and *MGI VideoWave SE* for video capture and editing. We found the *WinDVR* easy to use, and the card provided excellent video performance as both a gaming video card and PVR.

The ATI All-In-Wonder RADEON 8500 ($199) also gives excellent performance in both of these areas. ATI

www.americanradiohistory.com

On-line program guides such as those offered by Gemstar (www.gemstartvguide.com) *and Titan* (www.titantv.com) *have made searching through local programming a breeze. Most of these services are provided free of charge.*

has announced its next generation of video chips, the RADEON 9000 series, so there may be an All-In-Wonder board based on this new chipset by the time that you read this. The All-In-Wonder also has a break-out box with connectors for video and audio inputs and outputs, but one is a dongle-like cable that we found just a touch less convenient than Compro's approach. On the other hand, Compro's Personal Cinema uses an infrared remote control, while ATI uses an RF-based remote. This feature means that you'll have to position the green breakout box on the Personal Cinema where it can "see" the remote's signal. The All-In-Wonder's connector can remain out of sight under a desk if that is more convenient. ATI provides its own software, but it operates very much like the *WinDVR* that's supplied with the Compro card.

IF IT AIN'T BROKE...

If you are quite happy with your present video and don't like the idea of being forced to upgrade it to gain PVR capabilities, there is an alternative. SnapStream Media (*www.snapstream.com*) has a terrific PVR package, *SnapStream 2.0* that works with most of the TV-tuner-enabled cards currently available. A list of compatible cards can be found on the vendor's Web site.

We tested *SnapStream Personal Video Station* (PVS) *2.0* with a card that was supplied with the software, a Hauppauge WinTV PCI card. This is an inexpensive tuner and video-capture card that works in conjunction with the video card already installed in your PC. Hauppauge has a variety of different TV cards, starting at about $99.

SnapStream 2.0 is very easy to install, but the TV card needs to be working before you start. We installed the Hauppauge WinTV card in a Pentium 4 system that was running an NVIDIA GeForce 4 Ti4600. We installed the *WinTV* drivers and software and attached the cable from one of the cable TV outlets. The *WinTV* software needs to be configured as to the video source, and you also need to let the software run the tuner up the channels to see where there is actually a signal. Then go back and remove the channels that are scrambled, as the WinTV card does not function as a cable TV descrambler. You can also run a cable from a cable box and use that input to record premium channels that you subscribe to. In this setup, you'll be recording from the output channel that the cable box uses (usually 2 or 3), not the actual channel itself.

Once you have the WinTV card working and configured, install *SnapStream 2.0*. You can set *SnapStream 2.0* to record at different picture quality settings, depending upon how much hard-disk space you have available. *SnapStream* works with the Titan on-line program guide. This guide is free; just register where you live and what cable system you subscribe to, and you can see what's on simply by logging onto the site. Click on the little red button icon, and Titan will automatically tell *SnapStream* to record the program that you want to watch.

SnapStream works well, though with the WinTV card we occasionally experienced some out-of-sync audio. Since it also works with other TV-capable video cards, we tested it with the Compro Personal Cinema card. We actually got a bit better performance with the GeForce4-based Compro card over the WinTV card SnapStream provided us with.

SOURCE INFORMATION

ATI Technologies
www.ati.com

Compro
www.comprousa.com

Gemstar On-Line TV Program Guide
www.gemstartv.com

SnapStream Media
www.snapstream.com

Titan On-Line TV Program Guide
www.titantv.com

JUST LOOKING

Regardless of whether you simply add a tuner to your existing card or replace the card with a video card that includes a tuner, it's easy to set up and use your PVR. The newest generation of NVIDIA-based products has dropped the price of the GeForce2 Personal Cinema cards dramatically. The original GeForce2 MX Personal Cinema card is, as this is being written, available from Compro's on-line store for a clearance price of $79. There are comparable prices for other Personal Cinema cards, depending on which GeForce card the PVR is based on. ATI also has blow-out prices on the earlier versions of its All-In-Wonder cards. So now is a great time to add a TV and PVR to your PC, ASAP!

www.americanradiohistory.com

REID GOLDSBOROUGH

mailto: digitaldomain@gernsback.com

Tips on Useful Tips

Some people love to tinker—to take what they have and try to improve it. Others regard tinkering as the equivalent of sticking a screwdriver inside an electrical outlet.

A personal computer and the software that runs on it, as customizable as they are, give you great opportunities for tinkering. Many people personalize their PC with add-on hardware, software utilities, keyboard shortcuts, and other tricks to such an extent that the PC becomes an extension of their very personality. Other people keep their PCs at, well, arm's distance, running only those programs that came with them and even here sticking only to the basics.

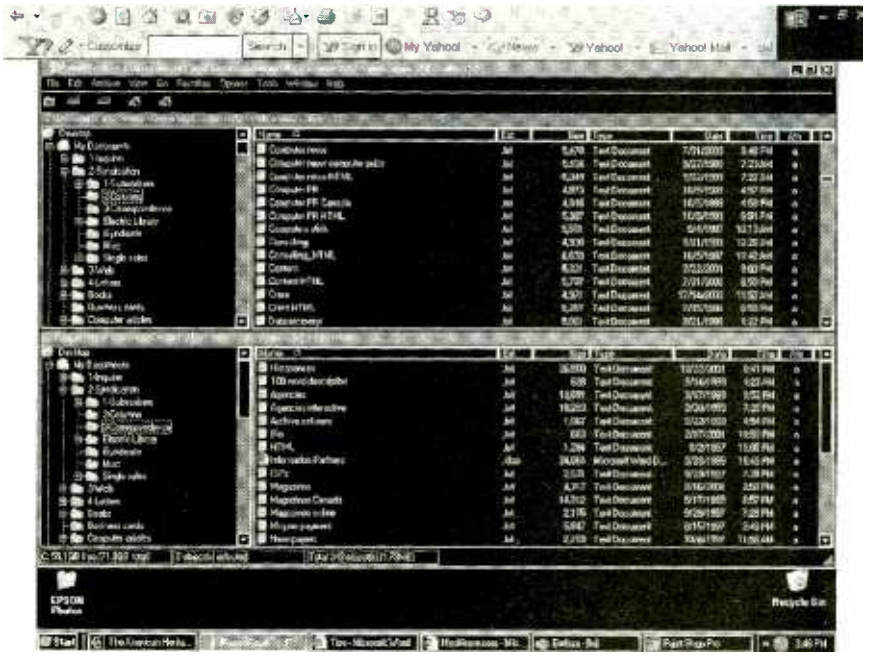

Using white text on a black background has been proven to reduce eyestrain when reading Web pages on a computer monitor.

KEEPING TIP-TOP

There are good reasons for tinkering, and there are equally good reasons for leaving well enough alone. The most compelling reason for hunting down computer tips and techniques is that it can make you more productive. You can perform tasks with your PC that you couldn't otherwise or you can perform tasks that you currently do, but faster or with less hassle.

The single best software utility program, for instance, that I've come across—I've been using various versions of it for years and have found none better at what it does—is *PowerDesk Pro* (*www.ontrack.com/powerdesk*). This Windows file manager lets you copy, move, and compress files on your hard disk with greater dexterity than the tools provided by Windows itself. If you need to stay organized in this way, this $30 add-on will more than pay for itself.

Some tips are simply fun. Microsoft *PowerToys* lets you make adjustments that Windows alone doesn't, including viewing the icon of the application window you are switching to when pressing Alt-Tab, magnifying part of your screen from the taskbar, and managing up to four virtual desktops. Different versions of *PowerToys* exist for different versions of Windows, with the Windows XP version at *www.microsoft.com/windowsxp/pro/downloads/powertoys.asp*.

Other tips can help keep in check the inevitable wear and tear your body experiences from sitting in front of a PC for long periods of time. My favorite is using Microsoft XP's accessibility options—although primarily designed for people with limited use of their hands or eyes, they can be used by anyone. What I do is direct Windows to use a high-contrast combination of text and background colors—white text on a black background instead of the traditional black text on a white background. This dramatically reduces both the amount of light shining into my eyes from my computer monitor and the eyestrain I experience from using my PC.

To make this change, you can access Accessibility Options through the Control Panel, or you can use the shortcut keyboard combination Alt-Shift-PrintScreen. Most programs and Web sites work fine this way, but, with some, you'll need to temporarily switch back.

RISKY BUSINESS

There is, of course, the risk of mucking things up whenever you tinker: deleting important data, corrupting programs, or temporarily disabling your computer. Tinkering can create support headaches for larger organizations, which is why some restrict it.

www.americanradiohistory.com

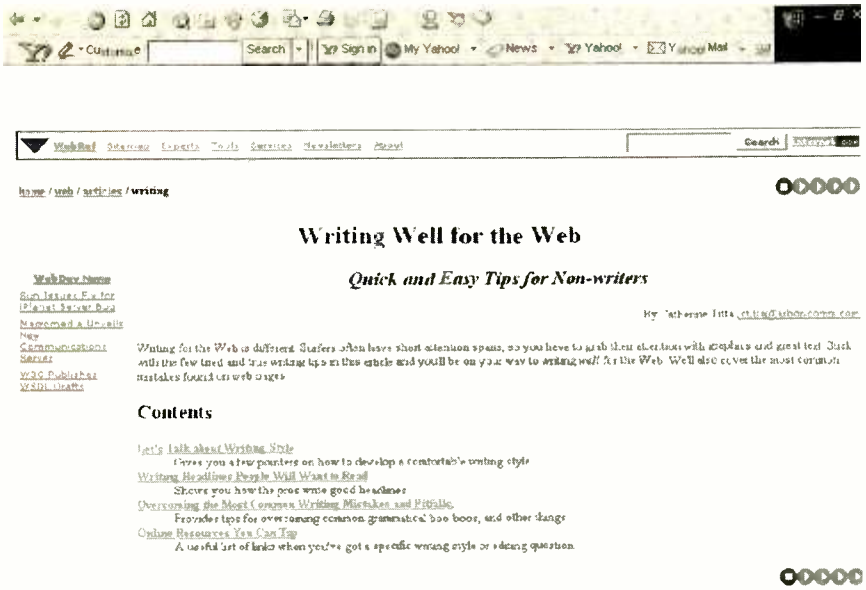

You can learn more about writing for the Web by reading the numerous references for writers available on the Internet.

The risk of using tips is fairly small, and it shouldn't deter the adventuresome. Even if things do go wrong, data can be retrieved from backups, programs can be reinstalled, and the offending add-ons can be removed.

Whether you use a Windows PC, Mac, Linux box, notebook PC, or handheld PC, there are hundreds of tips and techniques worth investigating (though not necessarily all at once!).

The best sources for these tips that I've found are computer magazines such as *PC World* (*www.pcworld.com*) and *MacHome* (*www.machome.com*), which employ a high degree of professionalism in testing out the tips and techniques they recommend and in offering advice, in general. Subscribing is most convenient, but you can also access much of the same information through their Web sites.

Other Web sites can also be good sources, with recommended sites including CNET (*www.cnet.com*), ZDNet (*www.zdnet.com*), SuperSite for Windows (*www.winsupersite.com*), and Macintosh Watering Hole *(mac.map.com)*.

Another good source of tips can be fellow computer users, though you have to be careful about whom you listen to. Some people are more knowledgeable and accurate than others. You can often get very good advice from online discussion groups or you can join a computer user group—they typically meet once a month. Members (or sometimes guests) give presentations on new products or on how to best use existing products. You can search for a user group near you at the Web site of the Association of Personal Computer User Groups *(cdb.apcug.org/loclist.asp)*.

TIPS ON NET COMMUNICATION

As an information-delivery medium, the Internet in many ways is similar to other media; and you can use magazines and newspapers as examples when researching, writing, and presenting information online. However, the Internet comes with its own set of tips and techniques.

Doing Research—Much here depends on whether you're writing for a Web site or a discussion group. Despite the noise of online arguments, much valuable inside information is offered in Usenet, e-mail, and Web discussion groups. Online discussion groups are just that—discussion groups—where people talk by typing. Mistakes can be quickly corrected with follow-up messages. You don't want to be careless, as many people may read what you write; but you don't have to give the same amount of time to research and fact-checking, as with a less fluid medium.

Web sites are typically more formal than discussion groups, but you can also quickly correct mistakes or add to incomplete information. Because people are usually more casual online, you have to be more careful about the research you do there. It's often good policy to check with multiple sources when searching for information, and it's often good policy to present your credentials when offering it.

With a Web site, make sure you identify yourself or your organization and indicate your experience. With online discussion groups, most software lets you automatically append a "sig" to each message, where you can include a few lines of biographical information or a link to your Web site.

Don't think that because you can't find something online, the information doesn't exist. Much valuable information is only available in print. On the

(Continued on page 56)

POINT AND CLICK

Association of Personal Computer User Groups
http://cdb.apcug.org/loclist.asp

CNET
www.cnet.com

Design Tips
www.devx.com/projectcool/developer/tips/design01_tips

Extra Help
www.library.ucla.edu/libraries/college/help/critical

Internet Writing
http://wdvl.internet.com/Internet/Writing

MacHome
www.machome.com

Macintosh Watering Hole
http://mac.map.com

PC World
www.pcworld.com

PowerDesk Pro
www.ontrack.com/powerdesk

SuperSite for Windows
www.supersite.com

Useit
www.useit.com

Web Reference
www.webreference.com/content/writing

Web Writing
www.sun.com/980713/webwriting

Windows XP
www.Microsoft.com/windowsxp/pro/downloads/powertoys.asp

ZDNet
www.zdnet.com

www.americanradiohistory.com

mailto: allabout@gernsback.com

WILLIAM SHEETS, K2MQJ, and RUDOLF F. GRAF, KA2CWL

Modulation Methods, Part 1: CW and AM

Transmitting information on some form of carrier (usually electromagnetic radiation) depends on a process called modulation. The ability to generate the required amounts of energy at any frequency is, of course, necessary for transmission of intelligence via electromagnetic radiation. If this energy cannot have information applied to it in some way, it is useless for most communications purposes. Parameters that can be controlled are the amplitude or power level, frequency of the radiation, and the phase of the waveform of the energy with respect to a known reference.

In addition, some means of extracting this information from the transmitted radiation is needed. This process is usually called demodulation or detection. For this discussion, we will assume that a carrier consisting of electromagnetic radiation in the radio-frequency spectrum will be used. Any frequency can be used, but we will assume it is one between 10 kHz and 300,000 MHz.

These limits are those presently allocated for communications purposes. Ten kHz is low enough in frequency to be audible as a high-pitched tone, if a headphone or speaker is used. Above 300,000 MHz, which is about as high as can be readily handled by microwave techniques, the radio spectrum is called the submillimeter region.

Above about 30,000,000 MHz (10 microns wavelength), it is the far infrared region of the spectrum. This radiation can be felt as heat rays. Visible light starts at about 430,000,000 MHz (0.7 microns wavelength), perceived by the eye as red light. Lasers operate in the far infrared to visible spectrum, and these can also be modulated.

These frequencies allow almost unlimited modulation bandwidth and are used for fiber-optic communications. Even though we will confine this discussion to radio frequencies, be aware that other forms of radiation can also be modulated. The same theoretical concepts will apply, although the physical methods and techniques will generally be very different from those used in the radio spectrum.

Digital-Type Modulation

The simplest and oldest form of modulation is a digital type, that of turning on and off a source of energy (light, RF carrier, etc.). (See Fig 1.) Originally, lanterns with shutters were used. Then, the Morse telegraph used a DC current that was turned on and off to form the dashes and dots of Morse Code. Later, radio waves were used to do the same thing. A key turns a transmitter on and off, generating a continuous wave (CW) signal. Although this technique is not used as widely today, it remains one of the simplest and most efficient means of communication. Only a very simple transmitter, even a very simple oscillator circuit with a single transistor, is needed. The inherently narrow bandwidth occupied by the signal permits the use of a very narrow-band receiver (20 to 100 Hz). This setup enables low-power transmitters to send signals thousands of miles. Reception with a relatively simple receiver is possible.

Radio amateurs do such transmission quite often. This activity is called "QRP operation," where QRP is CW shorthand for reduced or lowered transmitter power. Worldwide contacts have been made with only a milliwatt of power in the HF region of the spectrum (2–30 MHz), often enough as to be almost commonplace.

Before we discuss modulation methods, let's look at one factor that limits the potential performance of any given system. This factor is the noise inherent in any physical system.

Let's Do The Math

The limiting factor on how weak a signal can be and still be received depends on the receiver bandwidth, temperature, and type of modulation. In the following discussion, some high school math is used (algebra and trigonometry). Sorry for the math, but there is really no better way to present this information properly. Mathematics is a fascinating field and the language of science. If you really want to get into electronics or other aspects of engineering or the physical sciences, you need mathematical proficiency to fully understand many theoretical and practical design concepts. If you would rather not follow the math, you will have to take our word for the figures and numbers we use.

The noise power measured in watts in any bandwidth is given by the formula Power = KTB. See a physics textbook for the derivation of this equation if you are curious. K is Boltzmanns constant, which is equal to 1.38 × 10exp(-23) joules/degree K; T is the absolute temperature in degrees Kelvin; and B is the bandwidth in cycles per second (Hz). One joule is equal to one watt for one second and is a measure of energy. At normal room temperature (taken as 20° C or 68° F), T is 293° K. Multiplying this out, at room temperature in a 1-Hz

www.americanradiohistory.com

Season's Greetings

Plug a Friend into Poptronics®

and Save $44.89*

This holiday season you can give an electrifying gift ... plug a friend into ***Poptronics®*** *and brighten the whole new year! Whether electronics is your friend's livelihood or hobby, your gift will illuminate the whole spectrum of electronics throughout the coming year and provide a monthly reminder of your friendship.*

Poptronics® Magazine will keep your friend informed and up-to-date with new ideas and innovations in all areas of electronics technology ... computers, video, radio, stereo, solid-state devices, satellite TV, medical electronics, communications, robotics, and much, much more.

Poptronics® combines the best attributes of ***Electronics Now*** and ***Popular Electronics***. It is *the* magazine for the hands-on electronics activist. We will be presenting articles on just about everything electronic—from satellite TV equipment to DVDs, gadgets and gizmos to energize your life, audio amplifiers, professional service features, PC-related projects, and much, much more.

PLUS: A selection of computer-oriented columns that explore the digital realm from the inner workings of a PC to the latest the Web has to offer. On the electronics side, there is something for everyone—from the beginner (Basic Circuitry and Q&A) to the expert. Whether your interest is fixing equipment (Service Clinic), tinkering with robots (Robotics Workshop), or adventuring to the farthest reaches of electronics and science (Amazing Science)—***Poptronics®*** takes you there.

SAVE $44.89* ... OR EVEN $89.78* ... For each gift of ***Poptronics®*** you give this holiday season, you save a full $44.89* off the newsstand price. And as a gift donor, you're entitled to start or extend your own subscription at the same Special Holiday Gift Rate—you save an additional $44.89*!

No need to send money ... if you prefer, we'll hold the bill till January, 2003. But you must rush the attached Gift Certificate to us to allow time to process your order and send a handsome gift announcement card, signed with your name, in time for the holidays.

So do it now ... take just a moment to fill in the names of a friend or two and mail the Gift Certificate to us in its attached, postage-paid reply envelope. That's all it takes to plug your friends into a whole year of exciting projects and new ideas in ***Poptronics®***!

*Newsstand price—8 issues @ $4.99 each
4 issues @ $5.99 each

www.americanradiohistory.com

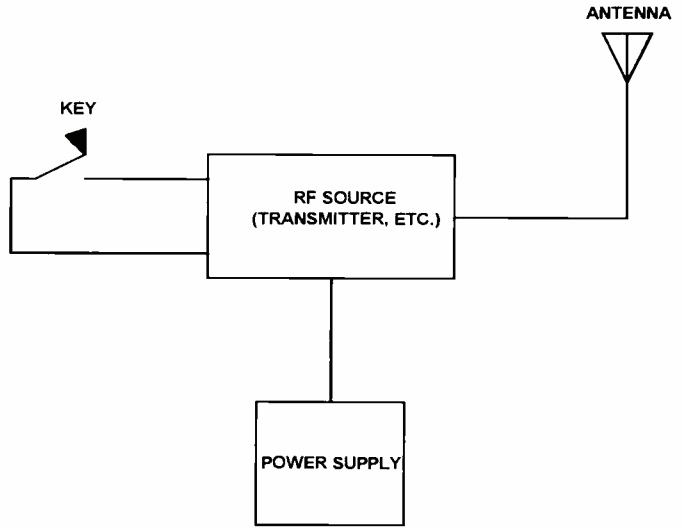

SIMPLE CW (CONTINUOUS WAVE) TRANSMITTER

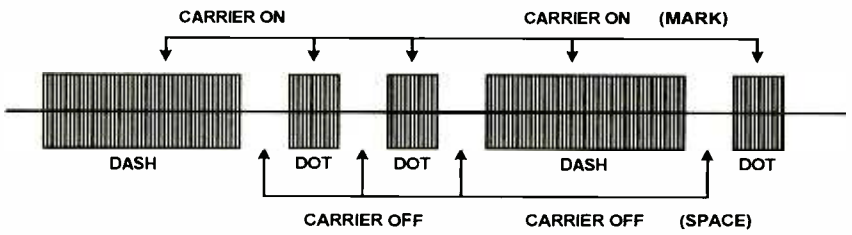

SIGNAL PRODUCED BY CW TRANSMITTER

FIGURE 1
CONTINUOUS WAVE (CW) TRANSMISSION

bandwidth we have a noise power of 4.04 × 10 exp (-21) watts of power. The watt is inconveniently large for this work, so the milliwatt (.001 watt) is used instead. This noise level is then 4.04 × 10 exp (-18) milliwatts. Since in RF systems we are usually dealing with very large variations in power levels, the decibel system is used to avoid inconveniently large or small numbers and ratios. Converting this power level to the more useful measurement of decibels referred to as a milliwatt and remembering that a decibel is a logarithmic ratio of two power levels results in:

dB = 10 log (P2/P1) for a ratio of 4.04 × 10 exp (-18) where P2/P1 is the power ratio

dB = 10 log (4.04 × 10 exp(-18)) = 10 log 4.04 + (-18) ×10 log 10

dB = 10 (0.606 – 18) = -173.94 dBm (very closely equals -174 dBm)

Note:

dB = 10 log (P2/P1) where P2 and P1 are power levels

dB = 20 log (V2/V1) where V2 and V1 are voltage levels

dBm = decibels with respect to 1 milliwatt reference power level

0 dBm = 1 milliwatt = 0.223 volts RMS in a 50-ohm system

As an example, the following figures are typically those signal levels one would encounter in operating HF (2–30 MHz) SSB or CW amateur radio equipment. Figures have been rounded off, are for a 50-ohm impedance (the usual situation), and are approximate within a percent or so. These readings are those that would be seen on a typical shortwave receiver signal-strength ("S") meter:

-20 dBm = 22.3 millivolts, "pegs:" S meter, very strong signal

-47 dBm = 1 millivolt (approx.), S9 + 26 dB, strong signal level

-60 dBm = 223 microvolts, S9 + 13 dB, a good signal

-73 dBm = 50 microvolts, an S9 (average) signal

-87 dBm = 10 microvolts, (S7+), a weaker but still decent signal

-107 dBm = 1 microvolt, (S3), weak, SSB marginal, CW is OK

-127 dBm = 0.1 microvolt, very weak, only CW readable

The dBm is independent of the resistance or impedance of the system, but the impedance must be specified for it to have any relation to actual voltages or currents. Since noise voltage is related to power and resistance, and power is V^2/R, then the noise voltage across a resistance is

$$Vnoise^2 = KTB/R$$

and

$$Vnoise = \sqrt{KTB}/\sqrt{R}$$

In any generator with a voltage V and internal resistance R, the maximum power available to the load occurs when Rload = R generator. This is the maximum power transfer theorem. The load power will be $(V/2)^2/R$ or $V^2/4R$. Then the noise voltage will be :

Vnoise = $\sqrt{4KTBR}$ where K = 1.38 × 10 exp(-23)

T = Temp deg K; note: deg K = deg C + 273

B = Bandwidth Hz

R = Resistance in ohms

Normally, we use power levels in noise work as it is more convenient. In a system, for example, the noise power

www.americanradiohistory.com

level is inherently –174 dBm in a 1-Hz bandwidth. Considering a 10-kHz bandwidth typically used in an AM broadcast receiver, we could take the ratio of 10 kHz to 1 Hz as 10,000 to 1. This is a 40-dB power ratio (10 log 10,000, or 10 × 4 since the log of 10,000 is 4; therefore a 10,000 to 1 ratio, which is 40 dB). Adding 40 dB to –174 dB gives –134 dBm, or 134 dB below a milliwatt. In a 50-ohm system, 1 milliwatt equals 0.223 volts RMS across 50 ohms. Since:

$$dB = 10 \log (P2/P1)$$

then

$$\log P2/P1 = dB/10$$

and

$$P2/P1 = \text{antilog } (dB/10)$$

Here we divide the dB ratio by 10 and find the inverse log of the result, in this case 13.4. Since we want the voltage ratio—the square root of the power ratio for a given resistance, we can divide the logarithm by two, which gives 6.7. Finding the antilog of this will give the voltage ratio that 134 dB represents

$$\text{antilog } (6.7) = 5.01 \times 10 \exp(6)$$

or a 5.01 million to one ratio.

Thus, –134 dBm = 0.223/5.01 × 10 exp(-6). It comes out to be 0.045 microvolts across 50 ohms—the noise-power level in a perfect receiver with a 10-kHz bandwidth. Theoretically, this is the *m*inimum *d*etectable *s*ignal (MDS), assuming that the received signal power equals the noise power. (This is only an assumption, as techniques exist for detecting signals below the noise, and the MDS also depends on the signal processing used in the receiver.)

Dealing With Noise

A good Morse code operator can usually copy a weak signal that is at the receiver noise level. However, receivers are not perfect. Good receivers used for VHF-UHF work may have noise figures of 1 dB, which means that the receiver noise level is 1 dB above ideal. A typical HF receiver has a 10- to 20-dB noise figure; thus, the signal detectable in a 10-kHz bandwidth, in this case, would be 10- to 20-dB higher (a three to ten times voltage ratio).

External and atmospheric noise limits reception anyway, so noise figures lower than 15 dB or so are of dubious advantage in an HF receiver, especially below 20 MHz. (Strong signal performance is generally more important in the HF region). It would then be ten times 0.045 microvolts, or 0.45 microvolts.

However, for voice work, at least a 6-dB signal-to-noise ratio is needed for barest intelligibility, with 10 dB being more like it. This requirement raises the minimum input signal to the 1- to 1.5-microvolt level for copying a voice signal, such as that from an AM medium-wave or short-wave station. You would probably not listen to this program for a long time, as it would be quite noisy. Another 10- to 20-dB signal level would be needed for comfortable copying, depending on how badly you wanted to listen to it, bringing the signal level up to 5 to 15 microvolts for reasonable reception. The important thing is the signal-to-noise ratio and not just the signal level. In noisy reception areas, stronger signals are needed. For any system, the bandwidth is important in optimizing the quality of the received signal: too wide, we get more noise and poorer signal-to-noise ratio; too narrow, we may lose some of the information in the signal or introduce distortion.

The Morse CW Signal

In the case of the Morse CW signal, the necessary bandwidth can be estimated by examining the signal. (See Fig 1.) At a speed of 25 words per minute (a fairly rapid, but comfortable speed typical of experienced CW operators), this would be about 125 Morse characters per minute, assuming an average five-letter word. This is roughly one letter and space per 500 milliseconds.

Taking the worst case, the Morse code symbol for the number 5 has five consecutive dots and can be considered as a square wave with five complete cycles in half a second. This is equivalent to a 10-Hz square wave. A square wave consists of frequencies that are mainly fundamental, and the third and fifth harmonics (odd) of the fundamental.

If the square wave is asymmetrical (typical for Morse Code as there are dots, dashes, and spaces), there are second and fourth (even) harmonics, also. Although it is an approximation, a square wave decent enough to be copied as a Morse Code signal consists of harmonics up to at least the fifth. Therefore, a minimum bandwidth of 50 to 100 Hz would be needed in this example, for 25 words-per-minute speed of transmission. This minimum allows for some tuning error and short-term receiver drift. More than this, the signal-to-noise ratio will start to decrease. Less bandwidth will cause loss of the higher harmonics and rounding of the waveforms to where the signal would be difficult to copy, unless the sending speed were reduced.

If speeds of five words per minute were used, bandwidth could be reduced accordingly at the expense of speed of transmission. For this reason, very weak signal CW work is done at slow transmission speeds—to allow narrow bandwidth and an increase in effective receiving sensitivity.

In practice, many receivers for amateur radio CW use 200- to 400-Hz bandwidth, as it allows for more comfortable tuning by the operator, for some receiver drift, and less costly filtering. Even with 400-Hz bandwidth and a 20-dB noise figure, the minimum discernable signal level is around 0.1 microvolts, depending on the operator's skill and hearing acuity.

In most cases, external noise will be the limit anyway. A 0.5-microvolt signal is typically comfortable to copy. Contrast this with the 5- to 15-microvolt figure needed for AM or 2 to 5 microvolts for SSB for marginal copy, and you can readily see the advantages of CW techniques using Morse code or other forms of slow-speed digital modulation in weak signal work. In this era of cheap and powerful computers, the Internet, cell phones, and sophisticated equipment, simplicity still is important.

It is a sobering fact and somewhat amusing to note that the use of plain old (obsolete....?) Morse Code, 1940-era radio technology, with a skilled operator can give reliable and dependable emergency communications when all else is knocked out. Only a simple transmitter, a shortwave receiver, and a length of wire strung up between two trees or other supports are needed to get a station on the air. A 12-volt auto battery will do for power. In emergency situations, communications might be impossible using much more sophisticated equipment, whose operation depends on a vulnerable infrastructure destroyed or rendered inoperable in a natural disaster; or made useless and/or inaccessible during a lockdown, terrorist, or national emergency. Do not count on using the

www.americanradiohistory.com

Internet, the telephone system, or your cell phones at these times.

Amplitude Modulation

The next form of modulation that evolved was probably *a*mplitude *m*odulation, called AM. In this case, the amplitude of the signal is modulated in some way by the waveform of the intelligence to be transmitted. Here, the envelope of the transmitted AM signal is a replica of the modulating waveform. (See Fig 2.) Usually, the carrier is a sinusoidal waveform, and the modulation is audio or data. The modulating waveform can be represented as a superposition of harmonically related sine-wave components (Fourier's Theorem). The amplitude of the carrier waveform is modulated by the modulation (audio/data), and a mixing action takes place.

The carrier waveform can be represented as:

$$Vc(t) = A \sin \omega c\, T$$

where

ωc = freq. radians/second = $2\pi \times$ Frequency in Hz

A = peak amplitude of sinewave in volts

Vc(t) = Instantaneous voltage of carrier

T = time

If a waveform is available, having an amplitude that swings between zero and Vm volts, described as:

$$Vm(t) = 1 + M \sin \omega m\, T$$

where

Vm(t) = total modulating signal

Vs(t) = modulating signal

ωm = modulating frequency rad/sec

T = time

M= relative amplitude of modulation

(M is 0 minimum to 1 maximum)

then this signal can be used to modulate a carrier signal.

If these two signals are mixed (multiplied together) in a modulator circuit

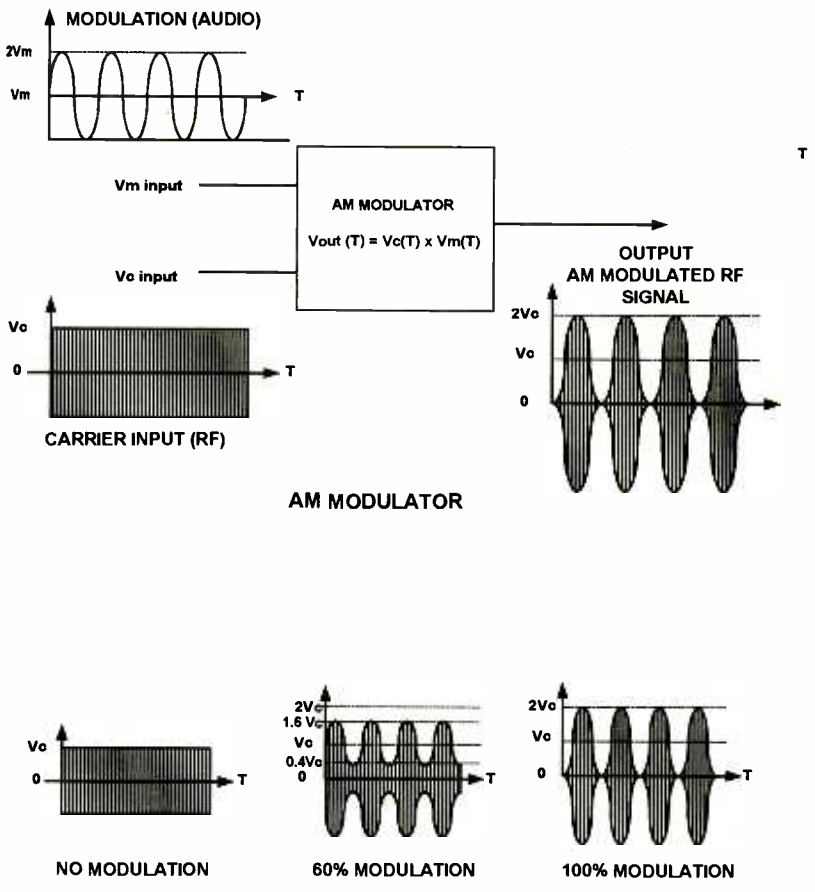

FIGURE 2 AMPLITUDE MODULATION (AM)

that produces an output proportional to the mathematical product of the input signals, the resultant output is an amplitude-modulated signal. We will assume this circuit has a gain of unity for simplicity. Then, multiplying the two signals we get an output signal as follows:

$$Vc(t) \times Vm(t) = A \sin \omega c T + AM (\sin \omega c T)(\sin \omega m T) = \text{resultant signal}$$

A trigonometric identity from your high school trigonometry book says that the product of two sines of two angles is as follows:

$$\sin X \sin Y = \tfrac{1}{2} \cos (X-Y) + \tfrac{1}{2} \cos (X+Y)$$

For simplicity, assume A = M = 1. (This will result in a 1-volt carrier with a 1-volt peak modulating signal.) Substituting, in the trigonometric identity, X = ωc and Y = ωm, A & B = 1

$$Vc(t) \times Vm(t) = \sin \omega c T + \tfrac{1}{2} \cos (\omega c - \omega m)T + \tfrac{1}{2} (\cos \omega c + \omega m)T$$

Now, we have three components in the resulting signal:

1) sin $\omega c T$, which is a unit level sinewave signal at the carrier frequency.

2) ½ cos (ωc - ωm)T, which is a half-unit level cosinusoidal signal at a frequency equal to the difference between the carrier frequency and the modulating signal frequency. This is called the lower sideband.

3) ½ cos (ωc + ωm)T, which is a half-unit level cosinusoidal signal at a frequency equal to the sum of the carrier frequency and the modulating signal frequency. This is called the upper sideband.

The three signals produced are the carrier, the lower sideband, and the upper sideband. A cosinusoidal waveform is just a sine waveform shifted in phase by 90 degrees, so at T = 0 it is maximum, falling to zero at ωT = 90

(Continued on page 36)

www.americanradiohistory.com

Build The Frisker

WILLIAM SHEETS, K2MQJ and RUDOLF F. GRAF, KA2CWL

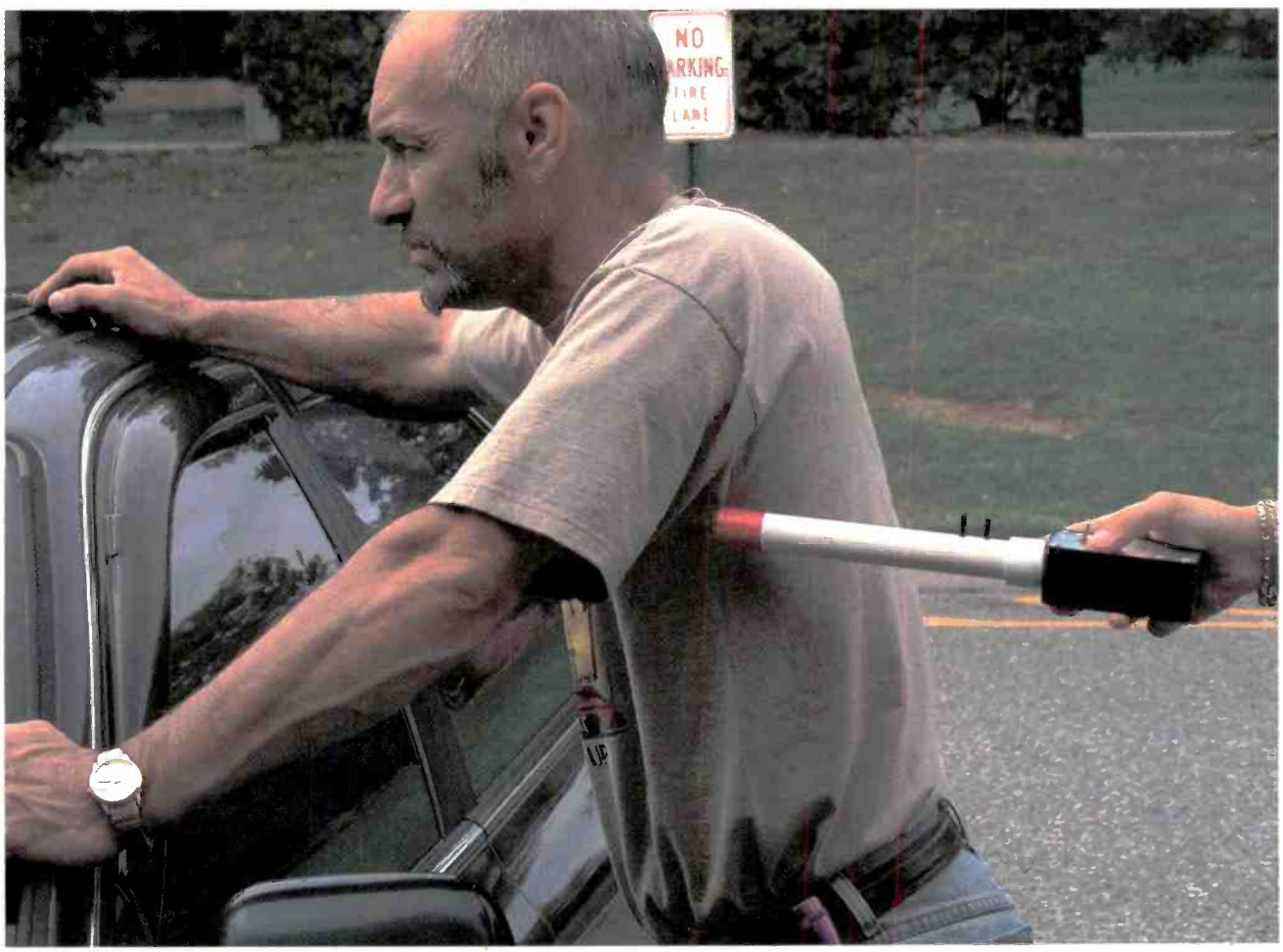

Sniff out metallic contraband with this hand-held device.

As you probably know, recent events have made us all more security conscious. It is now common to require those entering public and governmental buildings, boarding airplanes or cruise ships, and even attending high-profile sporting and entertainment events, to submit to some kind of security check. People have to pass through a metal detector on try; and briefcases, baggage, and packages are generally inspected, and often X-rayed.

Frequently, frisking occurs if any metal is detected, and any one may be subject to random frisking. To eliminate actual hand contact, a device that looks like a wand or small baton is commonly used. This device is a small metal-detector system for locating hidden forbidden items, such as knives, guns, or anything that could be used as a weapon.

www.americanradiohistory.com

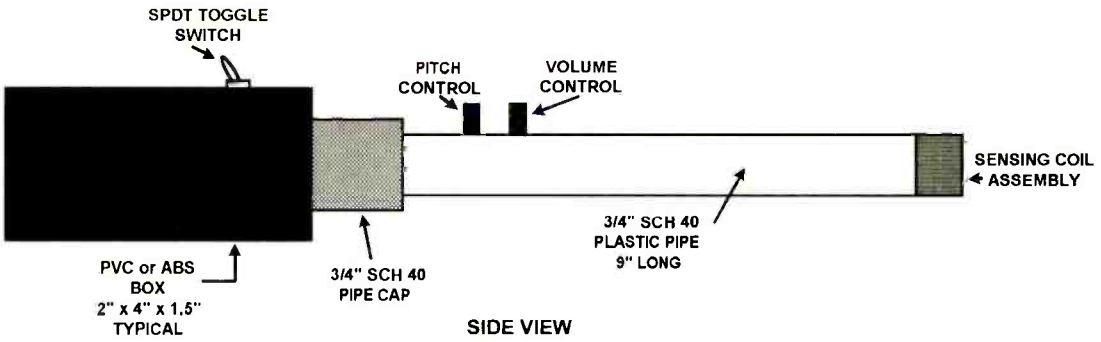

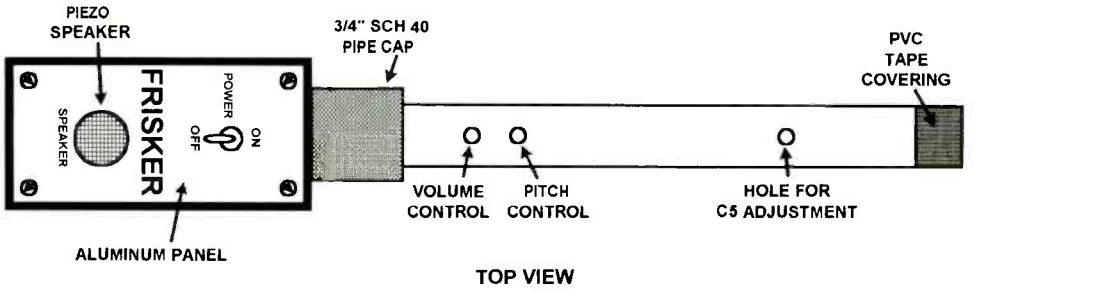

FIG. 1. PACKAGING

PARTS LIST FOR THE FRISKER

SEMICONDUCTORS

IC1—CD4060BE, 14-stage ripple-carry binary counter/divider and oscillator
IC2—LM386N
Q1—MPF102, JFET, N-Channel
Q2—2N3904, NPN-Si, AF/RF amp, driver
D1—1N914, silicon switching diode
D2—MV209, rectifier

RESISTORS

(All resistors are ¼-watt, 5% units.)
R1—220,000-ohm
R2, R12, R15—10,000-ohm
R3, R6, R7—33,000-ohm
R4—470-ohm
R5, R14—100-ohm
R8—100,000-ohm
R9, R10—4700-ohm
R11—2200-megohm
R13—2200-ohm
R16 —1000-ohm
R17—10-ohm
R18, R19—100,000-ohm potentiometer

CAPACITORS

C1—22-pF, NPO, ±5%
C2, C13, C15, C16—.01-µF, ceramic-disc, GMV
C3—100-pF, NPO, ±5%
C4—47-, 82- or 120-pF, NPO, ±5%
C5—3–40-pF, trimmer
C6, C17—0.22-µF, 35-volt, tantalum
C7, C11—0.47-µF, 35-volt, tantalum
C8—470-pF, ceramic-disc, ±20%
C9—47-pF, NPO, ±5%
C10—33-pF, NPO, ±5%
C12—.001-µF, Mylar
C14, C18—100-µF, 16-volt, electrolytic

COILS AND CHOKES

L1—Sensing coil, 375 T, center-tapped
X1—Crystal, 4-MHz, ± .01%, 20-pF, parallel-cut

ADDITIONAL PARTS AND MATERIALS

SPDT toggle switch, two shafts for pots, piezo speaker (Z > 16-ohm), 9-volt battery, battery connector, PVC or ABS box, ¾-inch × 9-inch tubing (PVC, Sch 40), ¾-inch PVC pipe cap, PVC cement, PC board, hardware as required

A kit of parts is available from North Country Radio, PO Box 53, Wykagyl Station, New Rochelle, NY, 10804-0053, and can be ordered on their Web *site:www.northcountryradio.com.* E-mail sales and order information: rgraf30832@aol.com. E-mail tech support: support@northcountryradio.com. Kit price is $49.75 plus $5.50 for p/h. NY residents please add $4.10 NY sales tax The kit includes a drilled, etched, and screened PC board; all the parts that mount on it; switch; a suitable plastic case; speaker; plastic pipe; pipe cap; and complete, detailed documentation. Cement, tape, miscellaneous hardware, and 9-volt battery are not included and are easily obtained at your local hardware supplier or home center.

www.americanradiohistory.com

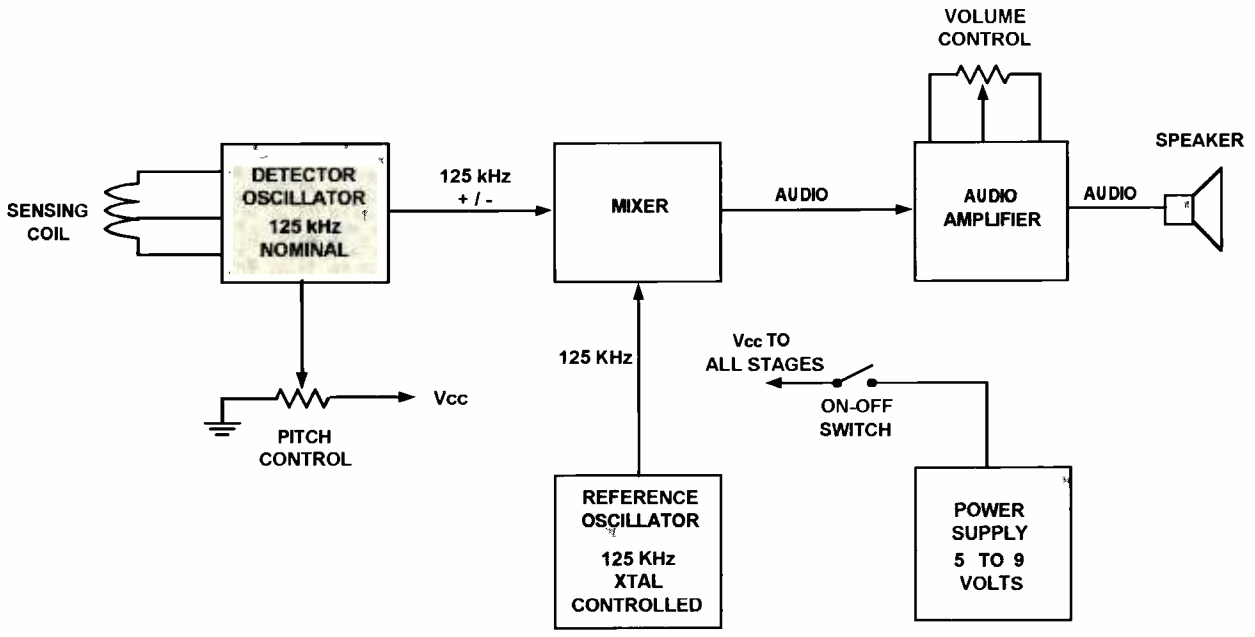

FIG. 2. BLOCK DIAGRAM

This article describes the theory, operation, and construction of the *Frisker*, a small metal detector similar to those described above—used by security personnel to find concealed metallic objects while avoiding physical contact with the subject. The Frisker will find such concealed weapons or any improvised weapons made of metal without requiring the subject to remove them from his or her pocket.

How It Works. Unlike X-ray systems, there is no hazardous radiation that could cause personal injury or could damage incidental items, such as photographic materials and some medicines. The device consists of a probe about nine inches long and one inch in diameter, with a small enclosure at one end for battery and speaker. This enclosure also serves as the handle. The metal detector's electronics and sensing coil are contained within the probe.

In actual use, the unit is turned on and a tone emanates from the built-in speaker. (See Fig. 1.) The end of the probe is run across suspected areas that may contain metal. A change in speaker volume or tone frequency indicates the presence of metal in that area. A common 9-volt transistor-radio battery powers the Frisker.

Theory Of Operation. When a metallic object is brought near a coil of wire, the inductance of that coil will change. A non-ferrous metallic object will act as a shorted turn and cause the coil inductance to decrease. Ferrous metals will also cause an inductance change, which may be an increase in inductance due to permeability effects, combined with the same shorted turn effect.

Ordinary steel or iron objects larger than the sensing coil will produce more of a shorted turn effect, while ferrites or smaller iron objects may cause an inductance increase. If this coil is part of a frequency-determining circuit such as the inductance in an L-C oscillator, this increase will cause a small frequency shift. Translating this shift into an audio tone makes it audible to a human ear, if the tone is used to drive a small speaker.

The detector-oscillator frequency is mixed with a fixed-reference frequency derived from a crystal oscillator. A mixer circuit produces an audio signal equal in frequency to the difference in frequency of the detector oscillator and the reference. Since small differences in audio frequency tones are noticeable, a frequency shift of 50 Hz or less in the detector oscillator can be readily heard.

Construction. Refer to the block diagram (Fig. 2) and the schematic of the Frisker (Fig. 3) for the following discussion. A foil pattern for the Frisker is provided in Fig. 7. An oscillator circuit—consisting of the JFET, Q1, and associated components—contains a sensing coil, L1, which is mounted at the end of the probe assembly shown in Fig. 1. Capacitors C3, C4, and C5—along with Varactor diode D2, bypass capacitor C2, and L1—make up a resonant circuit tuned to approximately 125 kHz. The frequency can be adjusted to this value via trimmer C5 and the bias voltage on D2, and set with pot R19 and isolation resistor R2. The coil, L1, is tapped, and the tap is connected to the source of Q1.

The junction of L1 and tuning capacitors C3, C4, and C5 is connected to the gate of the JFET via C1 and bias network R1 and D1. Capacitor C6 bypasses the drain of Q1 to ground, and DC is fed through R4 from the V_{CC} supply, which may be +5 to +9 volts. Any metallic object near L1 will affect the frequency of oscillation. The reference frequency is generated by IC1 and associated components.

Much of the circuitry needed is contained within this

www.americanradiohistory.com

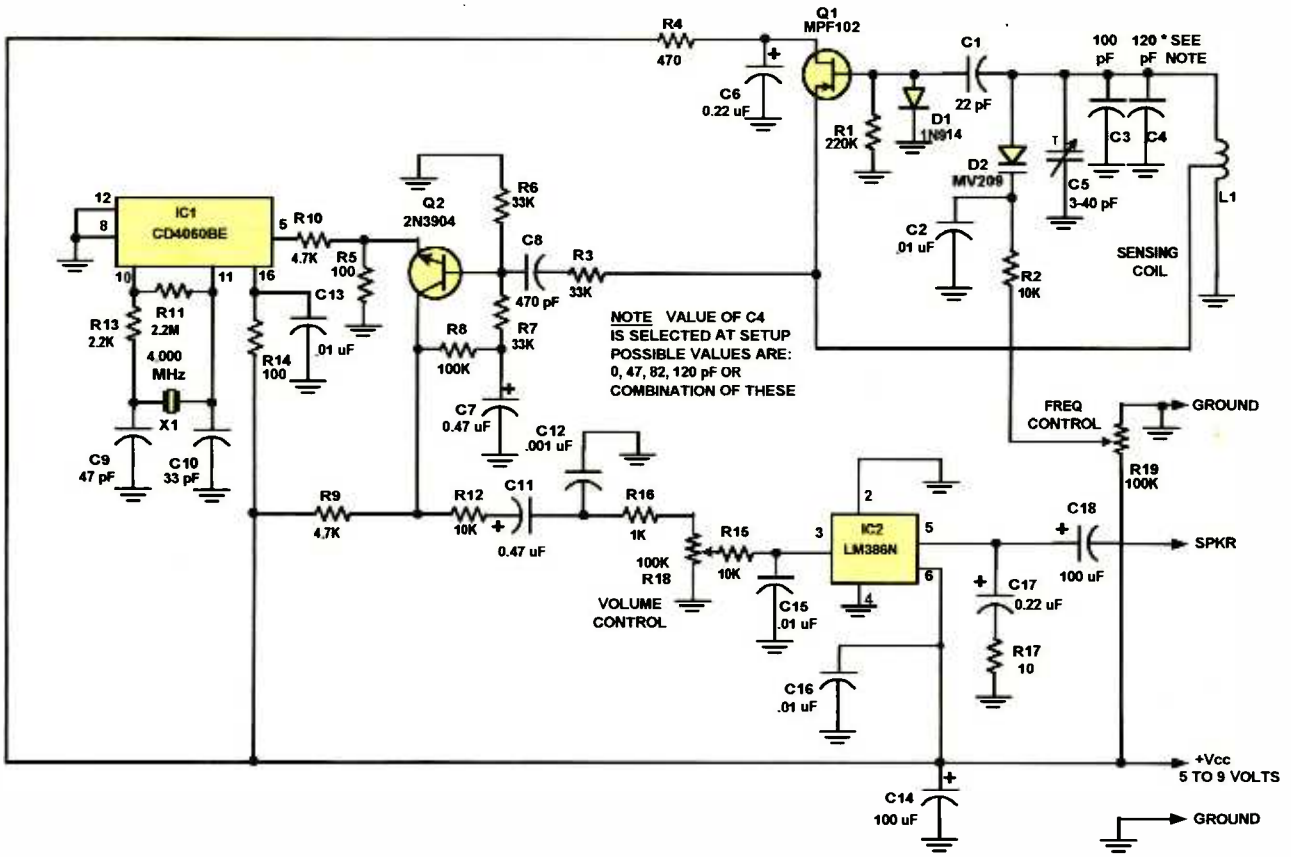

FIG. 3. SCHEMATIC

chip. Crystal X1 is a 4-MHz crystal and operates in fundamental mode. Components R13, C9, C10, and bias resistor R11 make up the crystal circuit. The oscillator active components are inside the chip. The signal at 4 MHz is divided by 32 internally in the chip, and a 125-kHz square wave appears at pin 5 of this chip. Resistors R10 and R5 feed some of this reference signal to the emitter of mixer transistor Q2. The decoupling components, R14 and C13, provide DC power to IC1.

Mixer transistor Q2 is biased by R5, R6, R7, R8, and R9. Capacitor C7 prevents degenerative feedback and keeps the gain of Q2 high. The detector oscillator signal is coupled via isolation resistor R3 and capacitor C8 to the base of Q2. Mixing of the detector and reference oscillator signals takes place in the emitter-base junction of Q2. The mixing products (mainly the detector and reference oscillators, and their sum and difference frequencies) are amplified by Q2 and appear at the collector. Components R12, C11, and C12 form a DC-blocking and low-pass filter network and suppress the higher frequency components. All we want is the frequency difference product, which lies in the audio range. Resistor R18 is the volume control, and R15 and C15 further attenuate unwanted high-frequency components. Semiconductor IC2 together with peripheral components C17, R17, and C18 make up an audio amplifier stage that delivers up to a few hundred milliwatts of audio to a small speaker mounted off the PC board.

The Frisker is designed to only sense objects within an inch or so of the probe tip. Sensitivity is proportional to coil size; and a larger coil would detect objects at greater distance, but with somewhat decreased resolution. Also, proximity effects would be somewhat more evident (capacitive detuning of the oscillator). With a larger coil (4–8 inches diameter or 10–20 cm), the Frisker could be used as a conventional metal detector. The 2-cm coil used here is a reasonable

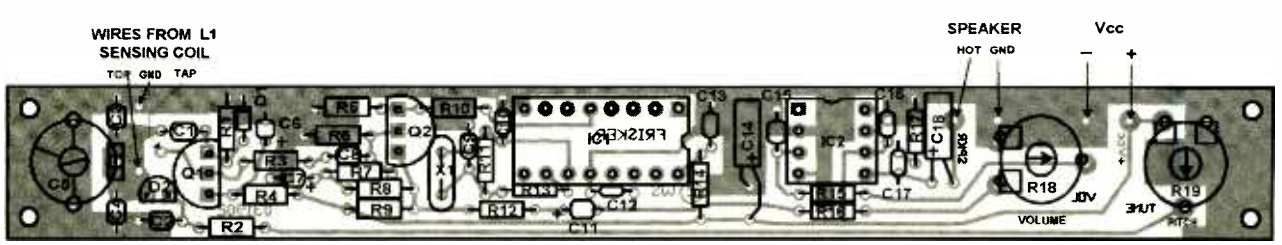

FIG. 4. PARTS PLACEMENT AND LAYOUT COMPONENT SIDE VIEW

www.americanradiohistory.com

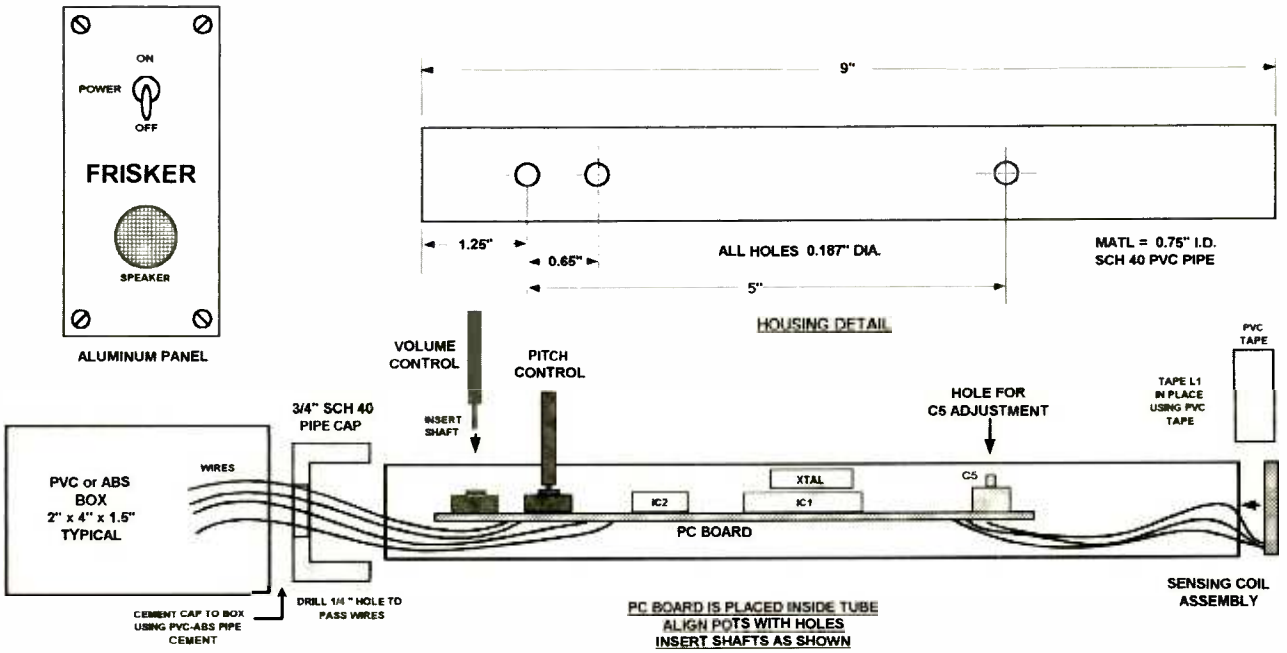

FIG. 5. CONSTRUCTION

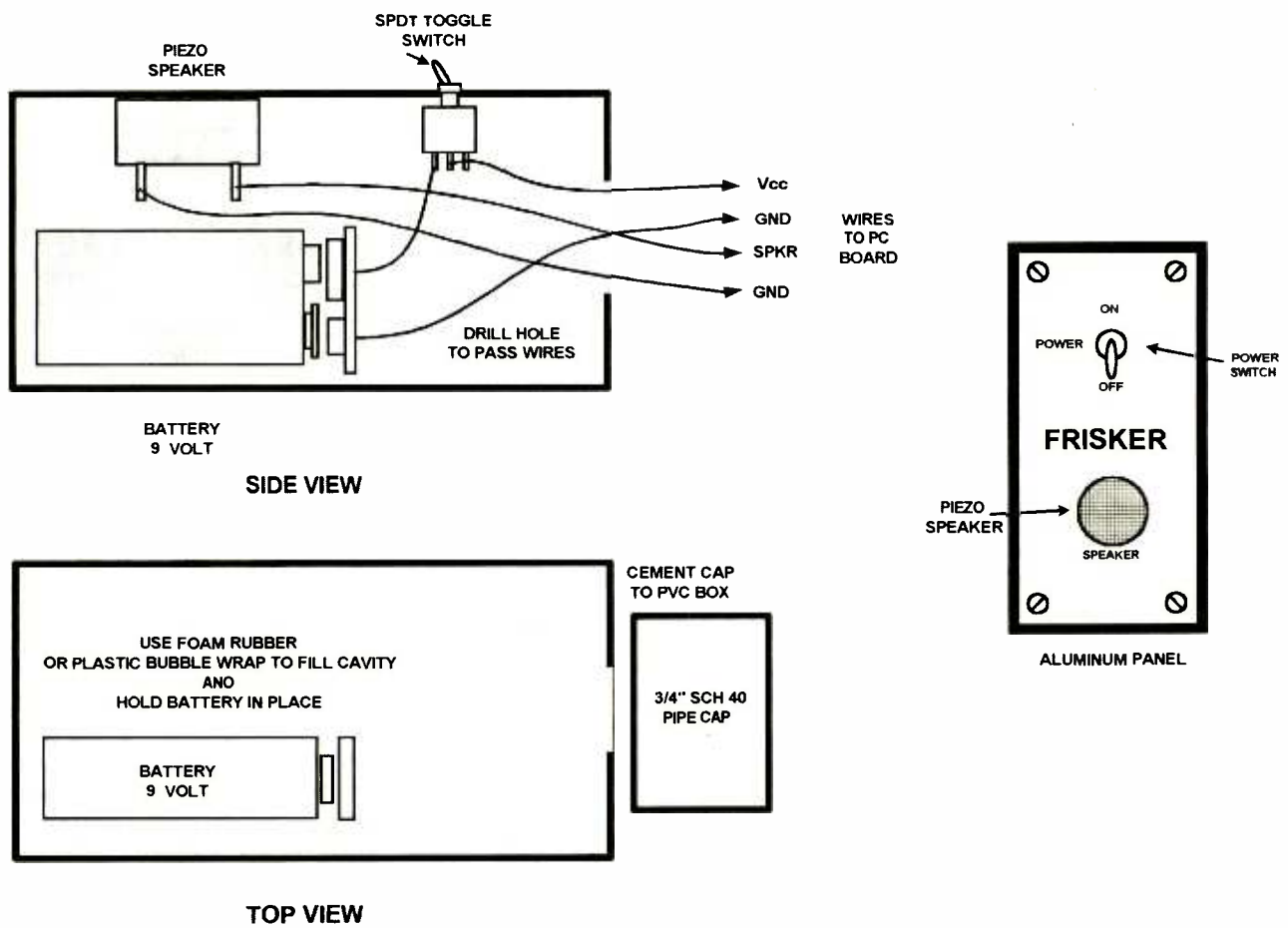

FIG. 6. BATTERY BOX & WIRING

www.americanradiohistory.com

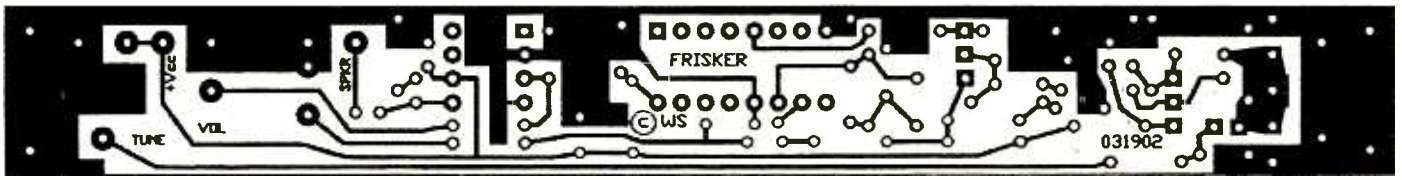

FIG. 7. FOIL PATTERN

compromise between sensitivity and size.

The electronics are mounted in the probe assembly on a single-sided PC board, 0.7 × 5.5 inches. (See Fig. 4 for the PC board parts layout and component and lead locations.) This board is designed to fit inside a standard ¾-inch (19-mm ID) schedule 40 PVC plastic pipe. A length of 9 inches (23 cm) was used, but this is not critical. This material is very inexpensive and readily available at home improvement centers and in the plumbing sections of hardware stores. Often, small lengths are available at these stores, as an alternative to the standard ten-foot lengths that are sold by plumbing suppliers.

A PVC-pipe cap secures the probe to a small plastic box (2 × 4 × 1.5 inches, or 5 × 10 × 4 cm) that houses the 9-volt battery, on-off switch, and a small piezo speaker. The PVC cap is cemented to the plastic box (made of ABS or PVC plastic) using standard plastic pipe cement, and a hole is drilled for passing the four leads from the PC board into the box. CAUTION: PVC cement is toxic, volatile, and very flammable. Do the cementing outdoors far away from any flame or lit cigarettes. Be very quick and use only enough cement to coat the surfaces—no more, as it sets very rapidly. Although this cement will appear dry in a few minutes, set the parts aside for at least two hours to ensure that the bond is strong enough to withstand handling.

The sensing (detector) coil is mounted to the other end of the plastic pipe using PVC electrician's tape. It consists of 375 turns of #36 wire, center-tapped, on a ¾-inch plastic bobbin. It is scramble wound. A ready-made coil is included in the Parts Kit available from the source listed in the Parts List. The coil fits on the end of ¾-inch pipe, and the tape may be coated with PVC cement to form a permanent bond. This is unnecessary as it prevents easy access to the PC board inside the pipe. The board is held in place by the two shafts for the frequency adjust and volume pots and cannot move once the shafts are installed. Three holes of .187 inches (about 7 mm) are drilled into the probe housing for the two pot shafts to protrude and for access to trimmer capacitor C5. See Figs. 5 and 6 for details of construction. Packaging is not critical and you may wish to make some modifications to fit the parts you have available.

A Simple Tune-Up. After checking the assembly of the PC board for errors, connect a speaker of 16-ohm impedance, or higher, to the speaker leads. Connect the sensor coil to the PC board leaving the coil leads loosely twisted together and about 3 inches long. Connect a 5- to 9-volt supply to the power leads. Be careful to observe polarity, as reversed battery polarity could damage C14 and IC2, and possibly IC1.

You should hear an audio tone of some sort from the speaker. Set C5 with the plates half meshed (mid-way between full and minimum capacity.) Adjust the volume control, R18, for comfortable volume and R19 for a tone frequency around 1–2 kHz (a whistle, not critical). Now adjust C5 so the pitch gets lower, ideally to zero. At this point, the tone will disappear as a low growl. Continuing to rotate C5 in the same direction will cause the pitch to rise again. The point at which the pitch is lowest and disappears is called "zero beat." You may have to select different values for C4 if you cannot get this whistle.

If rotating R19 fully clockwise decreases the pitch, the oscillator is too low in frequency. In this case, use an 82-pF capacitor in place of the 120-pF capacitor, C4. If the pitch is now better but not quite enough, try the 47-pF capacitor. Similarly, if turning R19 to the left decreases the pitch but not enough to get very low-pitched tones, add a 47-pF capacitor across the existing C4, or even 82-pF in some cases. The tuning range of C5 is small (about 2–3 kHz); therefore, it is normal to have to change C4 if C5 cannot compensate for tolerances. The optimum value of C4 is that which results in zero beat with both R19 and C5 set near the center of their adjustment range.

Alternatively, if you have a frequency counter you can connect it to the source of Q1 through a 15- to 33-K resistor and then adjust C5 for 125 kHz with R19 centered. The sensing coil should be away from any metal when this adjustment is made. Bringing metal (coin, keys, a knife, etc.) near the sensing coil should cause a noticeable change in pitch. If no audible whistle is obtained at all with any value of C5, there is something wrong.

Check your assembly and the circuit board for shorts and open joints. Look for misplaced/misoriented components. There is little to go wrong if the assembly is correctly done. After you are sure all is operating correctly, disconnect the power supply. Solder four 6- to 8-inch leads to the PC board for power and speaker connections. Slide the board into the PVC pipe (see Fig. 5) and position it inside the plastic pipe so that the centers of the pots R18 and R19 are visible through the two closely spaced holes at one end.

The third hole should be directly over C5 to allow future access to the trimmer capacitor for any final adjustments. Insert the two pot shafts into R18 and R19; this will lock the board in place. Fasten the sensing coil, L1, to the end of the tube. The wires can be twisted together. Be sure they do not block the hole for C5 access. The leads connected to the control end of the PC board are brought out the other end. A small notch cut or filed into the coil end of the tube provides

(Continued on page 29)

www.americanradiohistory.com

Build This Theremin, Part II

Reprinted from Electronics Now® March 1996

JOHN SIMONTON

Last month, we described the circuitry behind *Theremax*. This month, we will show you how to build it.

Although all of the signals in Theremax have frequencies below 1 MHz, it's important to build the unit carefully. Keep the point-to-point wiring as short as possible, and leave plenty of space between the four oscillators to minimize oscillator lock.

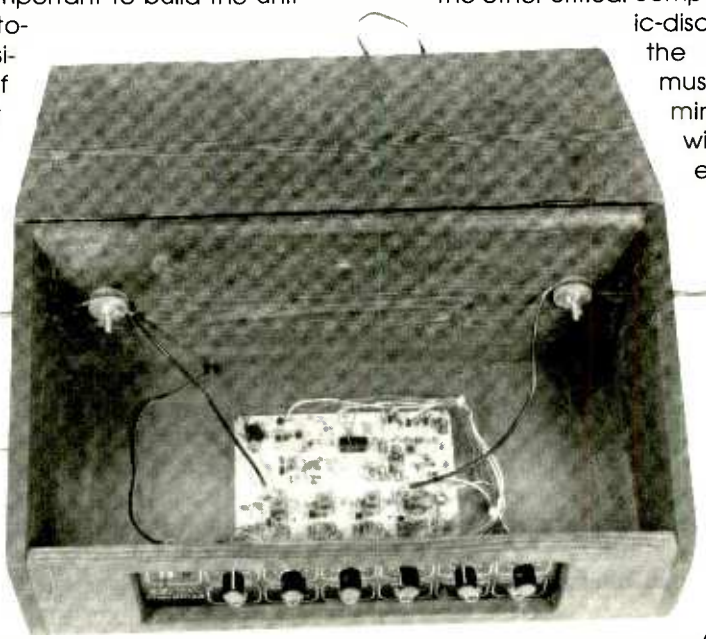

Construction. The easiest way to build the electronics of Theremax is either to make or buy the printed-circuit board presented last month. The component-placement diagram for the board is shown in Fig. 3. If you construct the circuit or just parts of it on perforated prototyping board, try to follow this layout as closely as possible since care has been taken to isolate parts of the circuit that might interact. Note in particular the use of a star ground point with traces emanating from circuit board point "G," and the grounded lands that encircle each oscillator. Make sure the metal cans of the inductors are grounded as well.

For the most part, Theremax is very forgiving of the specifics of components. For example, almost any NPN silicon transistor will work in place of the 2N4124s specified—2N3904s or 2N2222s will be fine. Even the inductor values are not very critical; and you will find that most suppliers carry IF transformers and local-oscillator coils that can be made to work in the circuit, probably without even changing the operating points of the transistors. Make sure the "cans" you use have a tapped primary (you may have to reverse the ends of the primary to get the tap closer to the collector end) and a secondary (polarity doesn't matter here).

Do not substitute silicon diodes for the germanium types used in the ring modulators. The forward voltage drop of silicon diodes makes them inappropriate here.

The other critical components are the ceramic-disc capacitors used in the tank circuits. These must be NPO types to minimize oscillator drift with changes in ambient temperature.

Connect the front-panel controls and jacks to the lettered pads on the circuit board with No. 22 AWG stranded wire, as shown in Fig. 4. Note that you must mount some of the fixed resistors between solder lugs on the panel controls, as shown. Mount the LEDs by twisting their cathode leads to their current-limiting resistors and soldering. Mount the front panel to the lectern case from the inside; the controls are exposed though a hole that's routed-out in the front of the case. The shapes of the case pieces have been kept as simple as possible. (See Fig. 5.) Assemble the case with simple butt joints, countersunk screws, and glue. (See Fig. 6.) The case for the prototype was cut from clear white pine and finished with walnut-tinted tung oil. If you start from scratch, you may choose other materials and configurations. If you decide on a metal case, make sure that the antennas are insulated from it.

Form the antennas from No. 6 AWG copper buss bar—the kind that power companies use for ground connections. This material was chosen for its malleability and ease of fabrication. Reformable antennas can be easily shaped for experimental purposes. For example, zigzag pitch antennas might give a different

www.americanradiohistory.com

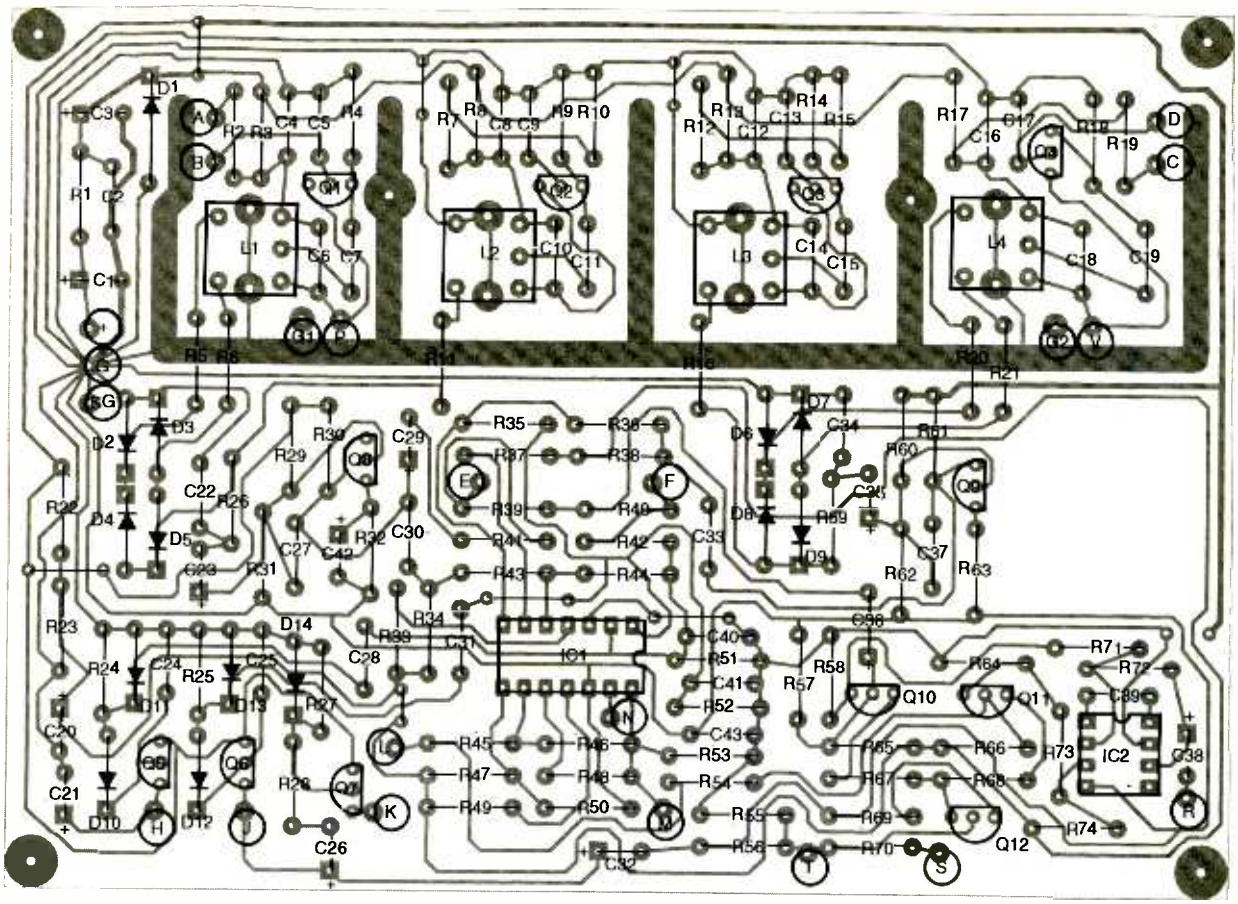

Fig. 3. Parts placement diagram for the Theremax circuit board. The lettered pads connect to off-board components.

means of obtaining vibrato—you could hold the pitch hand vertical while running it up and down, rather than waving it closer to the antenna. You can form the volume antenna from a length of the buss rod and bend it in any appealing, roughly loopish pattern. While the specific shapes that you choose for the antennas are pretty much up to you, be sure to keep them at right angles to one another to minimize interactions between them.

Mount the antennas to the case by passing them through 3/16-inch holes drilled in the end panels. Secure them to the back of the case with large washers, wing nuts, and No. 8 flat-head screws that pass through loops bent at the end of the buss rod, as shown in Fig. 7. Make the connection to the antennas with RG-174/U coaxial cable. Ground the shield only on the circuit-board end.

Make the bottom of the case from metal to form a ground plane that cuts down on any interactions between the pitch and volume sections. Mount the circuit board to the bottom plate with standoffs and 4-40 hardware. (See Fig. 8.)

Testing and Tuning. After examining your work carefully—looking for solder bridges, incorrectly placed or oriented parts and so on—it's time to power up. Plug the power adapter into a wall outlet and turn on the power switch, S1. You should immediately see the POWER LED light. If you don't, stop. Re-examine your work, and find out why.

Begin testing and initial tuning by setting the front-panel controls so that the PITCH TRIM and VOL TRIM controls are at about the midpoint of their range. Set the PITCH CV, TIMBRE, and VELOCITY controls fully counterclockwise; and rotate the volume control clockwise to its maximum setting. Connect the audio output of Theremax to the input of a hi-fi, instrument, or general-purpose amplifier.

Verify the operation of the oscillators and set the heterodyning pairs to the same frequency. With an oscilloscope, look at the voltage of the emitters of the oscillator transistors (Q1 to Q4) and observe the 500-kHz to 900-kHz sine waves with amplitudes of about 250 millivolts peak-to-peak and DC offsets from ground at about a volt. As the slugs of heterodyning pairs of oscillators are adjusted, the beat frequencies—0 to 10 kHz, 0.5 volts peak-to-peak sine waves—can be seen at the collectors of the amplifier transistors, Q8 or Q9. They'll have a typical DC offset of 5 to 6 volts above ground. First, turn the slugs of L2 and L3 clockwise until you feel resistance (don't try to "tighten" them), and then back them out about a half turn. Now, adjust L1 while watching Q8's collector. At some point in the rotation of the slug, you will see a sine wave that builds in amplitude while decreasing in frequency; and then goes to zero before once again increasing in pitch.

www.americanradiohistory.com

THE FRISKER

(continued from page 26)

clearance for the leads of L1, as well as for flush mounting of L1 to the tube end.

The small plastic box has a battery and speaker mounted inside it, with an on-off switch (see Fig. 6). A PVC ¾-inch pipe cap was cemented to the top of the box as described earlier. The tube assembly is then inserted into the pipe cap. DO NOT CEMENT THIS TOGETHER. You will permanently seal the assembly, making access to the PC board difficult or impossible without cutting the plastic. Friction fit is sufficient, or you can drill a small hole and use a small (#4 × ¼-inch) self-tapping or sheet metal screw if you prefer.

Using The Frisker. The Frisker works by placing the sensing coil against the subject and moving it around, while listening for a change in audio pitch. A slight steady change in tone caused by body capacitance may occur, but metal will cause a much larger change. Coins, keys, and other metallic objects can be readily detected. Surgical implants will not usually cause an indication if deep inside the subject. The Frisker can also be used around the house to locate nails and screws in trim, moldings, and walls. This feature will also prove handy when doing certain household chores, such as mounting pictures, shelves, and other objects on the walls. P

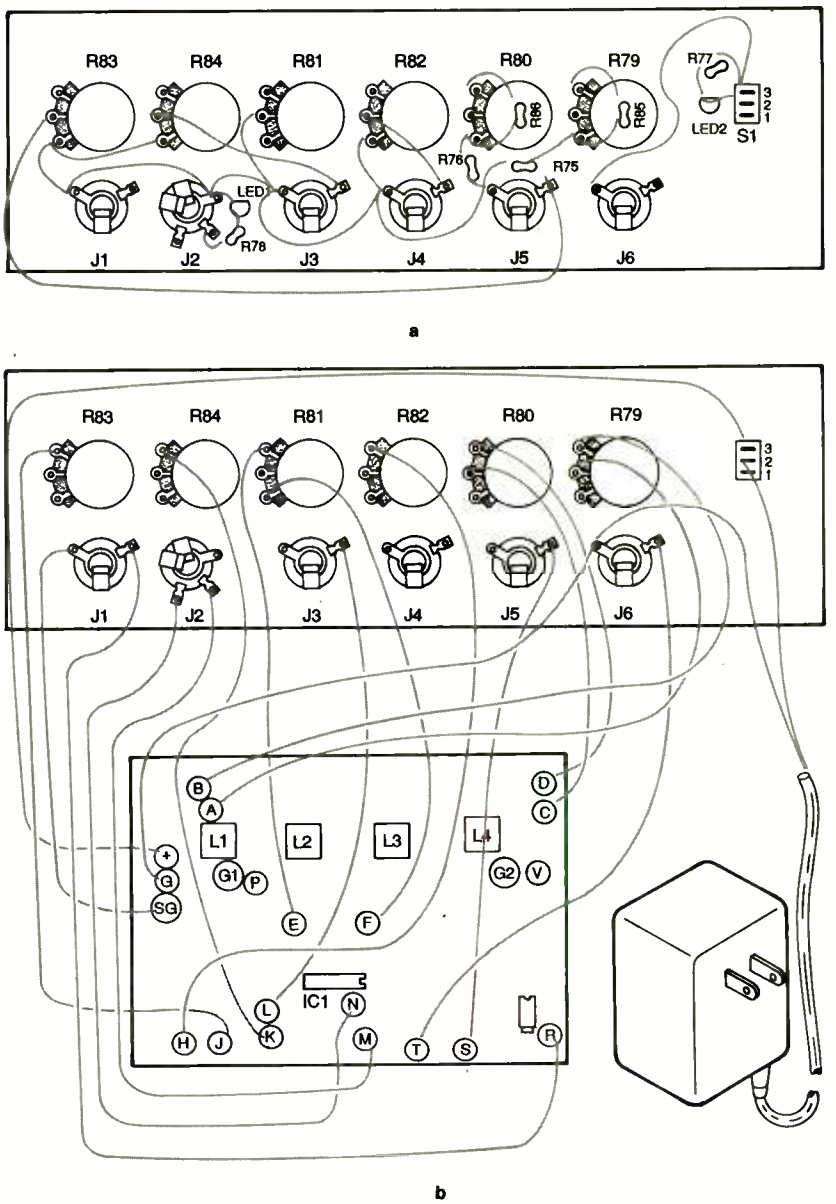

Fig. 4. Off-board wiring for Theremax. Some fixed resistors and LEDs mount directly to the front-panel controls and jacks.

The zero (null) point is your target. Do the same thing with L4 while watching for zero beat at the collector of Q9.

If you don't have an oscilloscope, a pocket AM radio can be pressed into service to verify that the oscillators are working and set to appropriate frequencies. Start by setting the radio to some quiet point between 650 and 750 kHz, and placing it as close as possible to the modulator diodes, D2 to D5. Set the radio to a fairly high volume and adjust the tuning slug of L2 up and down. At some point, you should hear a click or chirp as the frequency of the oscillator passes through the frequency set on the radio dial. Tune the slug very slowly back toward where you heard the chirp, and you will hear "whines"—faint whistles, feedthrough from adjacent stations and so on—as you get closer to the setting of the radio. As you turn further, you should reach a null where the previous whines are replaced by the hiss of white noise (there's no modulation so the only audible signal for the radio to detect is the noise of the transistors in the oscillators, which is fairly faint). When you have turned too far, you will begin to hear the same "whines" that you heard approaching the null. Leave

Yours for only $3.99

Price includes shipping!

HAVE A THOUSAND YUCKS FOR ONLY THREE AND A HALF BUCKS! That comes to one-third of a cent per laugh. Electronics Comics is a compilation of over 125 riotous, outrageous and phenomenal cartoons that appeared in **Popular Electronics** and **Electronics Now**. Only **$3.99**—price includes shipping. **Claggk, Inc., Reprint Bookstore, P.O. Box 12162, Hauppauge, NY 11788.** All payments in U.S. funds. Sorry, no orders outside U.S.A. and Canada. Check or money order only—send no cash. NY state residents add applicable tax. MA04

www.americanradiohistory.com

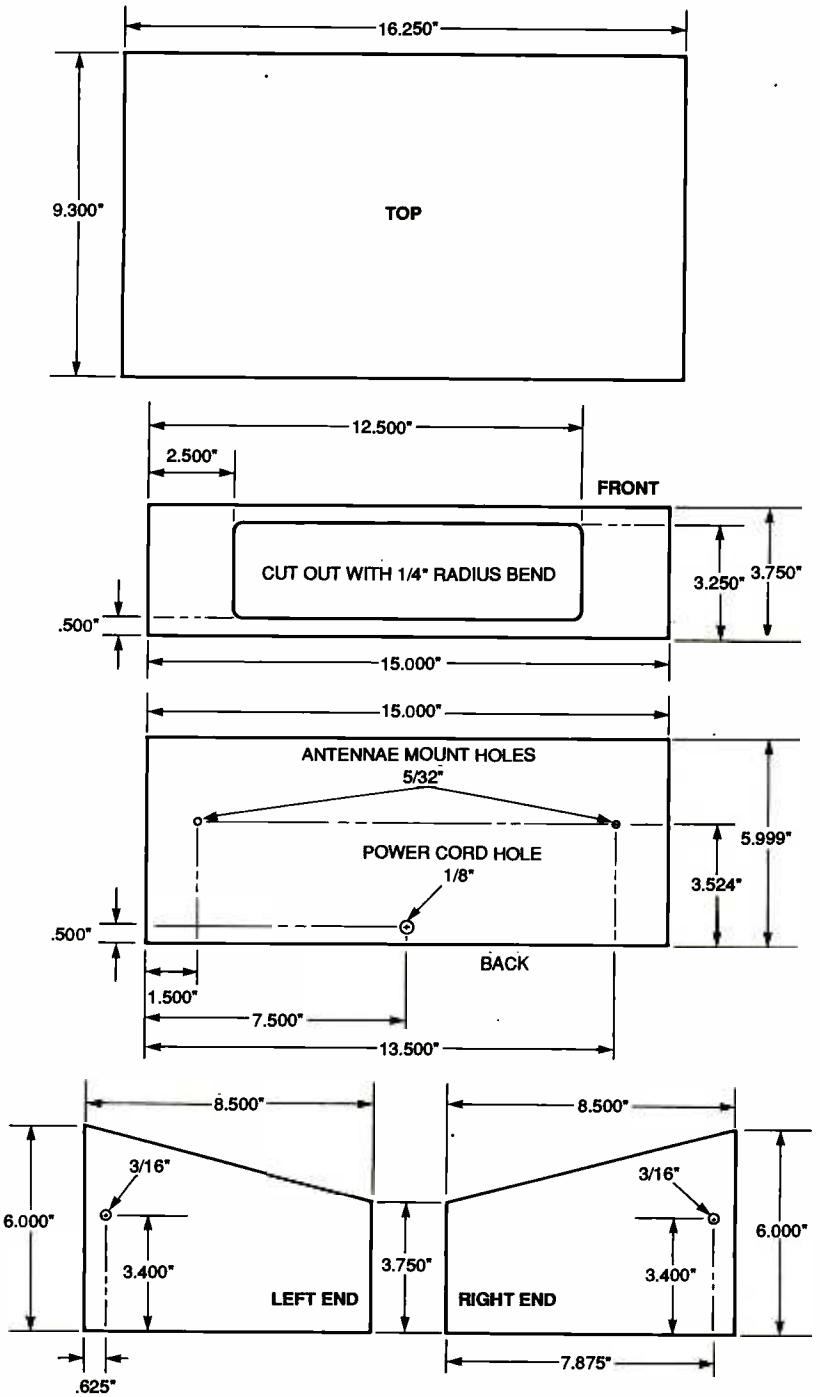

Fig. 5. Theremax's case is easy to build from ¼-inch thick white pine.

the slug set as close to the null as possible; it doesn't have to be exact.

Now adjust the slug of L1. At some point you will hear a loud chirp as the oscillator you are adjusting passes through the common frequencies of the local oscillator and the radio. Slowly adjust back to the chirp and you should hear a very loud, pure tone descending in pitch as you approach the null. Leave the slug set for as close to null as possible and verify that the front-panel PITCH TRIM control can be used to set an exact null. Leave the control set so that a low-pitch tone can be heard.

To adjust the volume oscillator pair, set the radio dial to a quiet spot between 900 and 1000 kHz, and adjust L3 in the same way that you previously adjusted L2. When

TIPS FOR MAIL ORDER PURCHASE

It is impossible for us to verify the claims of advertisers, including but not limited to product availability, credibility, reliability and existence of warranties. The following information is provided as a service for your protection. It is not intended to constitute legal advice and readers are advised to obtain independent advice on how to best protect their own interests based upon their individual circumstances and jurisdictions.

1. Confirm price and merchandise information with the seller, including brand, model, color or finish, accessories and rebates included in the price.

2. Understand the seller's return and/or refund policy, including the allowable return period, who pays the postage for returned merchandise and whether there is any "restocking" or "return" charge.

3. Understand the product's warranty. Is there a manufacturer's warranty, and if so, is it for a U.S. or foreign manufacturer? Note that many manufacturers assert that, even if the product comes with a U.S. manufacturer's warranty, if you purchase from an unauthorized dealer, you are not covered by the manufacturer's warranty. If in doubt, contact the manufacturer directly. In addition to, or instead of the manufacturer's warranty, the seller may offer its own warranty. In either case, what is covered by warranty, how long is the warranty period, where will the product be serviced, is there a charge for service, what do you have to do to obtain service and will the product be repaired or replaced? You may want to receive a copy of the written warranty before placing your order.

4. Keep a copy of all transactions, including but not limited to cancelled check, receipt and correspondence. For phone orders, make a note of the order including merchandise ordered, price, order date, expected delivery date and salesperson's name.

5. If the merchandise is not shipped within the promised time, or if no time was promised, within 30 days of receipt of the order, you generally have the right to cancel the order and get a refund.

6. Merchandise substitution without your express prior consent is generally not allowed.

7. If you have a problem with your order or the merchandise, write a letter to the seller with all the pertinent information and keep a copy.

8. If you are unable to obtain satisfaction from the seller, contact the consumer protection agency in the seller's state and your local Post Office.

If, after following the guidelines, you experience a problem with a mail order advertiser that you are unable to resolve, please let us know. Write to Advertising Department, Gernsback Publications Inc., 275 G Marcus Blvd. Hauppauge, NY 11788

Be sure to include copies of all correspondence.

www.americanradiohistory.com

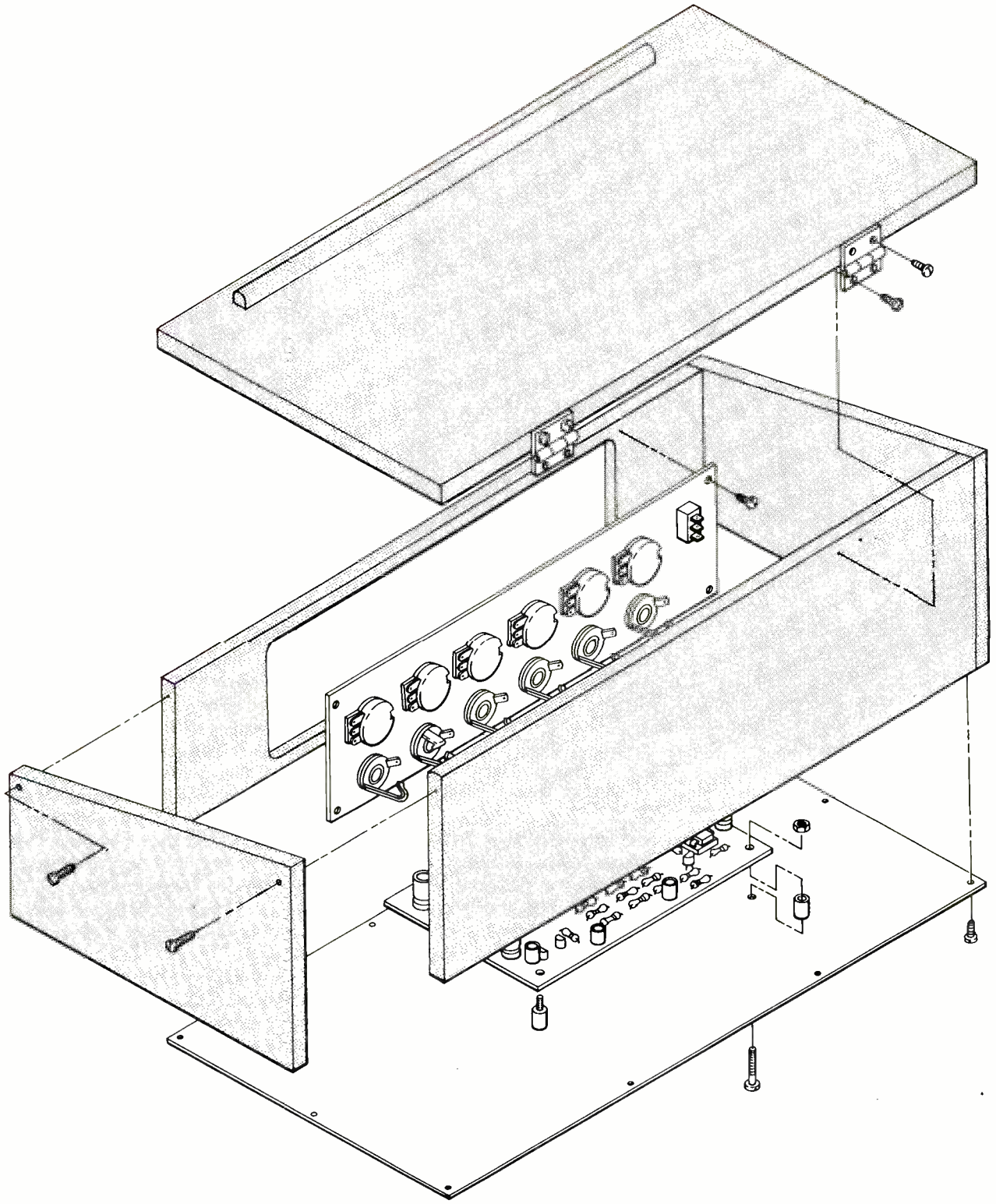

Fig. 6. Assemble the case as shown here.

L3 has been set close to the frequency of the radio, adjust L4 for zero beat of the heterodyne signal as you did with L1. Verify that the VOL TRIM potentiometer provides a vernier control of the frequency.

At this point, you should be able to start listening to Theremax through an amplifier connected to the audio output. With the volume control of the amplifier advanced slightly, bring your right hand up to the volume antenna—you should hear a tone swell in the amplifier's speaker. If you don't hear a tone, check to make sure that there is still some audible signal being produced by the pitch oscillators. If that's not the problem, check the rest of the audio signal and control path. Read the volume-control-

www.americanradiohistory.com

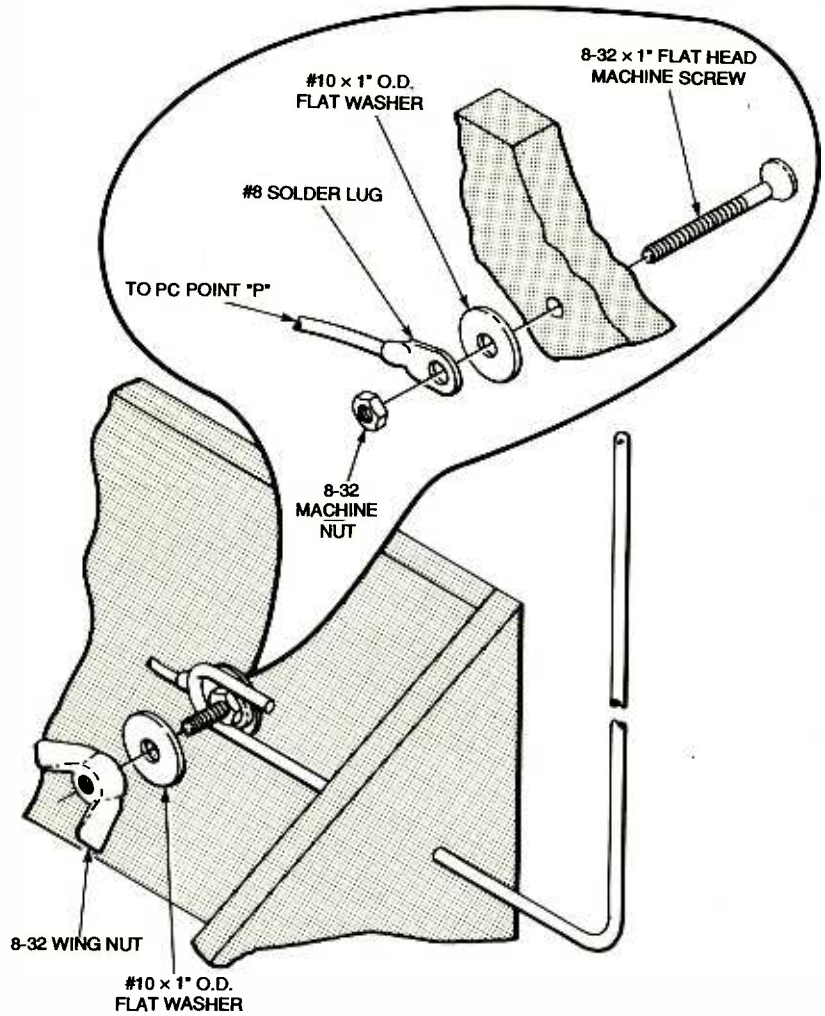

Fig. 7. Form a loop at the ends of the antennas for mounting.

voltage at the emitter of Q6 to make sure that it goes from about 0 to 6 volts as your hand approaches the volume antenna. If that's OK, check the differential pair, Q10 and Q11, and its control current source Q12. Finally, check the output stage, IC2. If there's no volume CV, check the amp, Q9, as described earlier; and check the output of the Schmitt trigger, IC1-b, at pin 1, where there should be a rail-to-rail square wave at the heterodyne frequency of the volume pair. If this signal is present, make sure the components of the differentiator/integrator (R25, C25, C31, D12, and D13) are in proper order.

With a tone audible, rotate the TIMBRE CONTROL clockwise and observe that the tone gets considerably more "sharp-edged" as you fade from sine-wave to square-wave output. Turn the TIMBRE CONTROL fully counterclockwise. Advance the VELOCITY CONTROL fully clockwise and observe that as your hand rapidly approaches the volume antenna, the gate/trig LED comes on. Also notice that the character of the sound now changes as your hand approaches the volume antenna—getting "fuller" when your hand approaches rapidly; and settling to a purer tone when you slow down, stop, or withdraw.

Playing Theremax. Playing the theremin is an art that can't be taught in a few paragraphs. Still, much can be learned by observing the playing style of Clara Rockmore. Clara's background was as a concert violinist, but a palsy in her hands that developed at a young age appeared to have put an end to her career as a performing musician until she started playing the theremin. (See the Sidebar in Part I.)

In many pictures of Clara taken over more than a thirty-year span she is seen in front of a huge free-standing loudspeaker. This pose was not just for the theatrical effect of the apparent glory behind her head, though in some of the photos this aspect is quite striking. She positioned the speaker directly behind her so that she could hear the note she was getting ready to play before it was loud enough for the audience to hear, performing pitch corrections in that last split second.

Reviews and other accounts of performances remark on her motionless, trance-like stance while playing; only her hands dancing back and forth over the antennas. That theatrical presence was rooted in necessity: A theremin doesn't respond to the motion of your hands only; it responds to body motion as well. If you're moving around while playing, you will find it more difficult to hit an exact pitch.

Clara had developed "aerial fingering" techniques that allowed her to play rapid passages with legato and even staccato articulation. Some years back when Bob Moog—the father of Moog synthesizers and manufacturer of theremins—was preparing an

SOURCE INFORMATION

Article: *Keyboard Magazine*, February 1994. Much of the issue is devoted to Leon Theremin and Clara Rockmore.

CD: *Clara Rockmore, The Art of the Theremin* (Delos D/CD 1014), Delos International, Inc., Hollywood and Vine Plaza, 1645 N. Vine St., Ste. 340, Hollywood, CA 90028; 323-962-2626 or 800-364-0645; *www.delosmus.com*.

Internet: The Theremin home page, *www.thereminworld.com*.

Film: *Theremin: An Electronic Odyssey*, a film by Steven M. Martin.

Equipment: Theremins are also manufactured by Bob Moog's company: Moog Music Inc., 554-C Riverside Dr., Asheville, NC 28801; 800-948-1990; *www.moogmusic.com*.

www.americanradiohistory.com

PARTS LIST FOR THE THEREMAX

SEMICONDUCTORS

IC1—LM339 quad comparator
IC2—748 op-amp
Q1–Q12—2N4124 NPN transistor
D1—8.2-volts, 400-milliwatts, Zener diode
D2–D9—1N34A germanium diode
D10–D14—1N914 silicon diode
D15, D16—Light-emitting diode, red

RESISTORS

(All resistors are ¼-watt, 5%, unless otherwise noted.)
R1—100-ohms
R2, R19—3300-ohms
R3, R8, R13, R17, R69—680-ohms
R4, R9, R14, R18, R48, R49, R61, R65, R66—56,000-ohms
R5, R6, R20, R21—47-ohms
R7, R12, R53—3900-ohms
R10, R15, R22, R23, R56—1000-ohms
R11, R16, R41, R50, R70—10,000-ohms
R24, R25, R54, R57—1-megohm
R26, R45, R59—4700-ohms
R27, R29, R60—470,000-ohms
R28, R67, R68—470-ohms
R30, R33, R34, R36, R37, R38—47,000-ohms
R31, R62—39,000-ohms
R32, R63—330-ohms
R35, R46—10-megohms
R39, R40, R55, R58, R64—22,000-ohms
R42—220,000-ohms
R43, R77, R78—2200-ohms
R44—4.7-megohms
R47—68,000-ohms
R51, R52—15,000-ohms
R71, R72, R73, R74—100,000-ohms
R75, R76—1500-ohms
R79, R80—1000-ohms, panel-mount potentiometer
R81, R82, R83, R84—10,000-ohms, panel-mount potentiometer
R85, R86—270-ohms

CAPACITORS

C1, C20, C42—100-µF, 10 volts, electrolytic
C2, C4, C8, C12, C16, C33, C43—0.01-µF, ceramic disc
C3—1000-µF, 10-volts, electrolytic
C5, C9, C13, C17, C39—100-pF, ceramic-disc
C6, C10—100-pF, NPO, ceramic-disc
C7, C11, C15, C19, C28, C31—470-pF, ceramic-disc
C14, C18—68-pF, NPO, ceramic-disc
C21, C26, C32—10-µF, 10-volts, electrolytic
C22, C27, C34, C37—220-pF, ceramic-disc
C23, C35, C36, C38—1-µF 10-volts, electrolytic
C24, C25, C30—0.1-µF, Mylar
C29—4.7-µF, 10-volts, electrolytic
C40, C41—0.001-µF, ceramic-disc

ADDITIONAL PARTS AND MATERIALS

J1, J3, J4, J5, J6—¼-inch phone jack
J2—¼-inch stereo phone jack
S1—SPST switch
P1—DC wall-mount adapter, 9-volts, 100-mA
L1, L2, L3, L4—796-kHz (nom.) oscillator coil
Knobs, circuit board, wire, solder, hardware, case, etc.

Note: The following items are available from PAiA Electronics, Inc., 3200 Teakwood Ln., Edmond, OK 73013; 405-340-6300; *www.paia.com/paia*. Complete kit of all electronic parts including power supply, circuit board and knobs less antennae and case (#9505K): $88.75 plus $7 shipping. Case kit with pieces cut from white pine and drilled for assembly, includes hardware; formed antennae; bottom plate; and punched, anodized, and legended control panel (#9505C): $77.25 plus $12 shipping. Partial Case Kit*: Front panel, antennae and antennae mounting hardware only (#9505fPA): $28.50 plus $7 shipping. Please NOTE: The mounting hardware is not appropriate for metal cases.

instrument for use in what was to be her last concert, he was quoted as remarking that he had to "hang it on the edge" to please Mrs. Rockmore. In the interest of ease of playing, Theremax is designed to be somewhat less sensitive. However, substituting smaller capacitors in the tank of the oscillators will take its sensitivity up to this concert-level performance. If you make these changes, be warned that you'll also need concert-level skills to handle them.

For maximum sensitivity to hand gestures, the PITCH TRIM control should be clockwise from null so that the heterodyne frequency is two octaves below middle C (64 Hz or so). When tuned this way, the maximum range of about six octaves will correspond to an 18–24-inch range of hand motion. Only the rare performer will be able to use more than three or four octaves, because the last couple requires that the hand be very close to the antenna.

Volume on the original theremins was increased by moving the hand away from the antenna. If you want to play Theremax this way, you should null the VOLUME TRIM control for minimum volume with your hand an inch or so from the antenna. Playing may seem more intuitive if you reverse this, so that volume increases as you move closer. To accomplish that, just null the VOLUME TRIM with your hand removed. Either way, volume must be nulled completely for the velocity feature to work properly.

Closing the contacts of a SPST switch plugged into the MUTE jack turns the audio output off completely. You may find that a foot switch—either momentary or push-on, push-off—makes playing easier. This switch closure could also be an open collector transistor output from other equipment, such as the "S" triggers used in some synthesizers. Muting the audio has no effect on the control-voltage outputs.

Many contemporary electronic musical instruments have provisions for external control of key parameters by means of control voltages, foot pedals, and so on. In many cases, Theremax's control voltages can be connected directly to these inputs. The availability of both gate and open-collector switching outputs on the GATE/TRIG output, J2, makes switch-style interfacing easy. In some cases, instruments expect a variable resistance at their external control jacks. In these cases, Theremax's control voltages can be converted to a resistance using an optocoupler, as shown in Fig. 9.

In some circles, voltage-controlled analog music synthesizers, antiques that they are, have great cachet. Theremax makes a useful supplemental controller to the keyboards typically used in these instruments. Figure 10 shows only

www.americanradiohistory.com

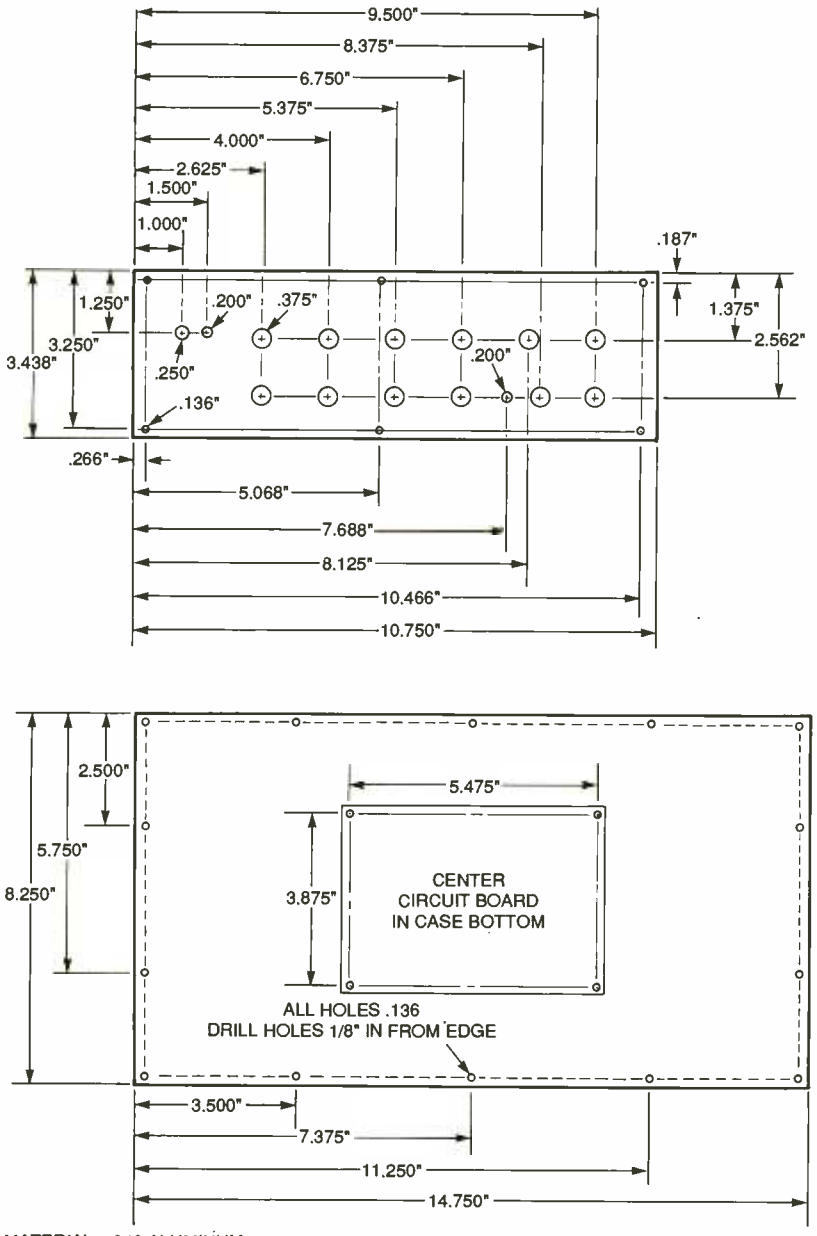

Fig. 8. The case bottom and the front panel should be made of metal.

one of an unlimited number of possible "patches." The PITCH CV output sets the frequency of the synthesizer's voltage-controlled oscillators (VCOs), so that the right hand still controls pitch. VCOs will typically provide a greater selection of waveforms than just sine or square, and multiple oscillators will produce a fuller sound.

The VOLUME CV isn't used to control volume; instead it's routed to the control-voltage input of the filter, so that the left hand now con-

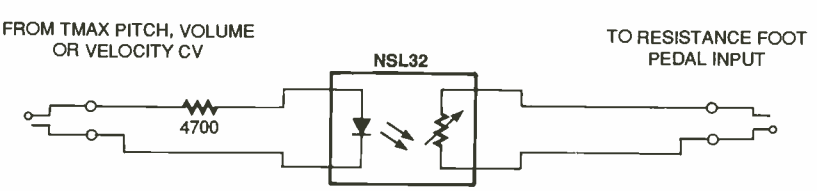

Fig. 9. An optoisolator can convert Theremax's control voltage to a resistance.

VCR Cross Reference

NOW Find the right Part for your VCR

With the

ISCET VCR CROSS REFERENCE

This 172-page reference contains both model and part-number cross-references updated as of Feb, 1997.

VCR's are made in a few factories from which hundreds of different brand names and model numbers identify cosmetically-changed identical and near-identical manufactured units. Interchangeable parts are very common. An exact replacement part may be available only a few minutes away from you even though the manufacturer supplier is out-of-stock. You may be able to cannibalize scrap units at no cost!

The ISCET VCR Cross Reference is pre-punched for standard loose-leaf binding. . .$29.95 includes shipping in the United States for each Reference.

Claggk Inc.
VCR CROSS REFERENCE OFFER
P.O. BOX 12162
HAUPPAUGE, NY 11778

Name _____
Business _____
Address _____
City _____
State _____ Zip _____
Phone _____

Enclose $29.95 for the Eighth Edition of the ISCET VCR Cross Reference including shipping for each Reference in the United States. All other countries add $5.00 (surface mail).
The total amount of my order is $ _____.
Check enclosed—do not send cash.
or please charge my credit card.
☐ Visa ☐ MasterCard Exp. Date __/__/__
Card No. _____
Signature _____

New York State residents must add applicable local sales tax to total. US funds only. Use US bank check or International Money Order. CB02

www.americanradiohistory.com

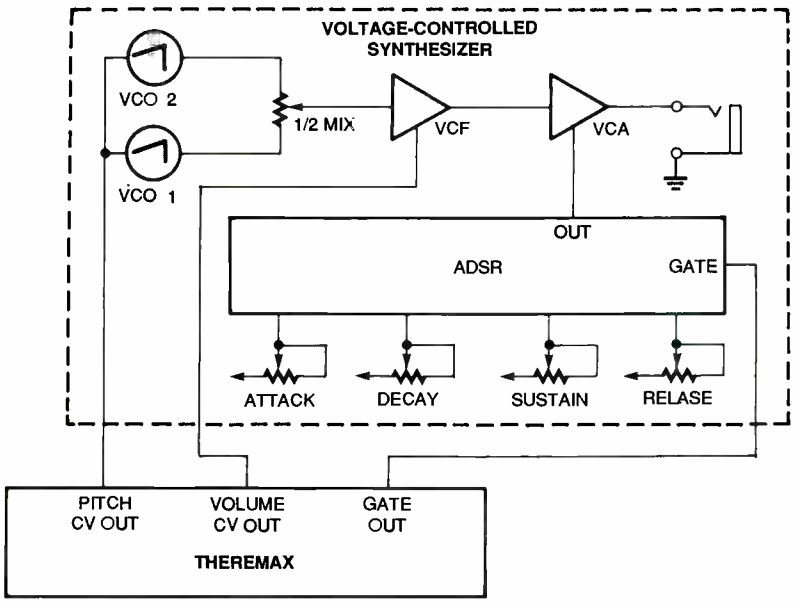

Fig. 10. Voltage-controlled synthesizers can be controlled by Theremax.

trols timbre instead.

So if volume is really timbre, how do you control volume? This is the cool part. As with most synthesizer patches, the dynamics of the sound—how fast it builds up and dies away—is controlled by an envelope generator, which here is triggered by Theremax's gate output. The volume hand does still control volume, sort of, but now moving the hand quickly toward the antenna will trigger a sound with dynamics set by the envelope generator. Remember that the place where the hand ends the triggering move sets the timbre (VCF). You've got air drums!

Theremax's gate output and control voltages don't just respond to the gestures of a performer; they're actually general-purpose people sensors and could be used to turn on or brighten lighting instruments arranged to accentuate different parts of a sculpture on the approach of an observer. They could also produce kinetic art that responds to how quickly it's approached and how close a person stands. Music is just the beginning—there are a lot of possibilities. Have fun playing with Theremax. P

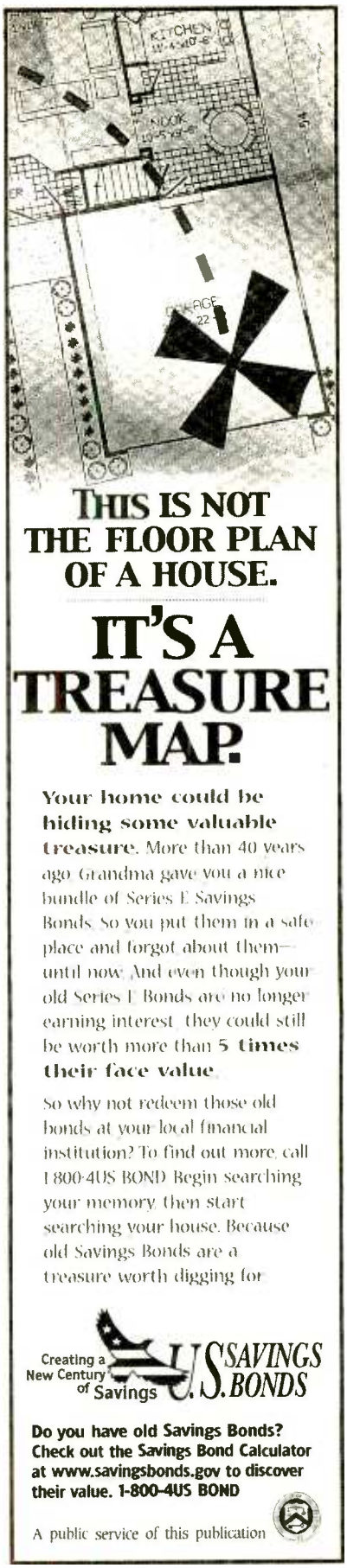

www.americanradiohistory.com

ALL ABOUT

(continued from page 20)

degrees. A sinewave starts at zero at T=0 and has a maximum at 90 degrees. Note that the two sidebands are one half that of the carrier in amplitude and are different in frequency from the carrier by the modulating frequency.

There is also a 90-degree phase shift. The ratio of the modulating signal to its peak value at full modulation is called the modulation index and is denoted by the letter M. M has a value between zero (no modulation) and 1 (maximum modulation). If M exceeds 1, this is called overmodulation and results in distortion.

The important thing to see is that the total signal bandwidth needed to pass these three components is twice the modulation frequency. It does not depend on the value of M. Therefore, for a standard AM broadcast signal with a maximum modulating frequency of 5 kHz, a 10-kHz bandwidth is required in the receiver. Also note, since the carrier term is simply a constant amplitude sine wave, it carries no intelligence and its amplitude is constant. Now, comes the big kicker!

Sidebands

Note that the amplitude of each sideband is only half of that of the carrier, even when M = 1. Therefore, the power in each sideband when M=1 is only one quarter that of the carrier. Since there are two sidebands, there is a total sideband energy of only half that of the carrier. Since these sidebands are identical, differing only in frequency by twice the modulating frequency, they both carry the same information and are redundant from an information viewpoint. The sidebands contain only one third the total signal power generated by the transmitter, but they carry all the information. Really, only one is needed, the other being redundant.

The modulating system must supply this sideband energy, half the power of the carrier signal if M = 1. The modulating power needed is equal to one half M squared. A 1000-watt AM carrier, for example, needs 500 watts of audio to fully modulate it. Well, then why not generate the AM signal at low level and amplify it? Not very efficient. Since the total peak amplitude of the signal is twice that of the carrier, a peak power of 4000 watts is present in a 1000-watt AM signal. Therefore, a power amplifier used for AM must be capable of delivering four times the carrier power on modulation peaks. The 4000-watt amplifier is delivering only a 1000-watt carrier and seldom operates at full power except on modulation peaks.

The overall efficiency is then low. Just as in real life, you do not get something for nothing. The alternative to a 500-watt modulator and a 1000-watt RF amplifier in this case is a low-level audio amplifier and a 4000-watt RF amplifier running inefficiently. Not that this is so bad, because at high-power levels it has the advantage of eliminating the expensive and heavy 500-watt modulation transformer needed to couple the audio energy to the transmitter-power amplifier. No matter how you look at it or do it, AM is a rip-off from an efficiency standpoint. However, it is simple to do, has fairly good audio fidelity, and still has better weak-signal performance over certain other modulation methods. It is easily received with a simple low-cost receiver and is not critical as to receiver mistuning. AM is still used worldwide for short-, medium-, and long-wave broadcasting, and for air-to-ground VHF voice communications.

It was realized in the early days of radio that since only one of the sidebands is needed, why bother to transmit the carrier and the other sideband? The carrier doesn't "carry" anything, as both the sidebands are RF and can be radiated by an antenna. Getting rid of the carrier and one sideband gets rid of five sixths of the radiated power with no loss of information. So the transmitter power can be effectively increased by a factor of six, since all the energy can be placed in the transmitted sideband.

Furthermore, the receiver bandwidth can be reduced by a factor of two. This gives a total of 8-dB transmitter gain and 3-dB receiver sensitivity, or 11-dB improvement in signal-to-noise ratio. The likelihood of interference to or from other signals is also reduced by using half the bandwidth; and channel capacity of a frequency band can be doubled, since each signal needs only half the bandwidth of an AM signal. This modified form of AM modulation is called *single sideband*, or SSB. We will discuss this subject in the next part of this article. Tune in next month. P

NORTH COUNTRY RADIO: A HAVEN FOR WIRELESS BUFFS

Graf and Sheets are no strangers to the pages of Gernsback. Their educational projects, such as the *RF-Field Strength Meter* and the *MPX2000* FM Transmitter, can be found at **North Country Radio**. Established in 1986, this company offers projects related to amateur TV transmitters/receivers, AM and FM transmitters/ receivers, video cameras, and numerous other subjects. Visit the Web site at **www.northcountryradio.com** for more information.

Ordering Information: PO Box 53, Wykagyl Station, New Rochelle, NY 10804-0053; Voice: 914-235-6611; Fax: 914-576-6051; e-mail: Rgraf30832@aol.com.

Engineering and Technical Support
PO Box 200, Hartford, NY 12838
Voice/Fax: 518-854-9280
e-mail: support@northcountryradio.com

Get your copy of the CRYSTAL SET HANDBOOK

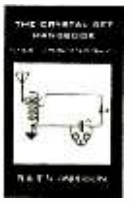

Go back to antiquity and build the radios that your grandfather built. Build the "Quaker Oats" type rig, wind coils that work and make it look like the 1920's! Only **$10.95** plus **$4.00** for shipping and handling. **Claggk Inc., PO Box 12162, Hauppauge, NY 11788.** USA Funds ONLY! USA and Canada -- no foreign orders. Allow 6-8 weeks for delivery. MA01

CRYSTAL SETS: VOLUME V.

Volume V of the Society newsletter includes six issues ending November 1995. Great for new members to get current, those wanting a bound copy for their reference bookshelf, or as a gift to get a friend started. Contents include: The Design of Unpowered AM Receivers, Radio Outfit in a Headset, A Crystal Set Revisited-Reconstructed, Grounded Loop-stick Tuner, The Matching Secret, and lots of membership correspondence. 8½ × 5½ paperback, **$10.95 plus shipping.—Electronic Technology Today Inc., PO Box 240, Massapequa Park, NY 11762-0240.** US funds only. Allow 6-8 weeks for delivery. MA06

www.americanradiohistory.com

Q & A

mailto: q&a@gernsback.com

READERS' QUESTIONS, EDITORS' ANSWERS
CONDUCTED BY DEAN HUSTER

Smart Outlet Box

Reader Wil Higdon let me know that Sears (*www.sears.com*) sells the Craftsman Auto Switch, Sears number 00924031000, which duplicates the function of the Heathkit Smart Outlet Box as described in my August 2002 column. Wil writes, "It has one master (sense) outlet and two slave outlets and does exactly what C.W. asked. For example, switching on the table saw (master outlet) could turn on a work light and a shop vacuum (slave outlets). Mine is used for a different application, though. My TV is on the master outlet and a stereo amp is on one of the slave outlets. Turning on the TV automatically switches on the amp for better sound than the TV alone can provide. All this for $19.99. It would be hard to purchase the project parts for less than that."

Thanks, Wil. As their slogan and jingle went in the 70s, "Sears has everything." I agree that $19.99 is a better deal than trying to cobble something together from new parts. On the other hand, for those of us who already have a well-stocked junkbox, that may not be true. Then there are those of us who like to reinvent the wheel and will build something for three times what a preassembled model will cost, just so we can say, "I made that."

Regarding your application for your stereo, it indicates that there is obviously a low-end current drop-out below which the device will not trigger. Nearly every TV made consumes a small amount of power even when "off" to keep the IR remote electronics alive.

DBs Are Not Always DBs

I had a very interesting note from reader Gary Jarman concerning the "DB-25" connectors (see my August column) used for serial and parallel computer interface. He made several points, fleshing out what I had written in the column and added some other information that I'd like to share.

Remember that the RS-232 interface standard doesn't do much more than define a few lines and insure that if you plug two devices together, you won't get smoke. Gary reiterated the fact that RS-232 does not set a communication standard, which is often why two "RS-232" devices won't talk to each other. A device can be RS-232-compatible but use any coding scheme it wants, whether it's the teletype Baudot, Morse code, or ASCII. ASCII is the normal assumption.

He notes that, in general, DTE (*d*ata *t*erminal *e*quipment), such as computers, uses male pins on their serial connectors; while DCE (*d*ata *c*ommunications *e*quipment), such as external modems, uses female connectors. He went on to specify numbers, stating that the minimum number of lines required for serial communications is three. These are for transmitted data, received data, and ground; although most serial devices that use hardware handshaking use at least seven wires.

In his note, Gary was leading up to a section that really caught my interest. He writes, "The real reason for all this wordiness is a lead-in to one of my pet peeves. The D subminiature connector series was first used in 1952 in Korean-conflict-era military equipment. There are hundreds of variations and design functions still available. The series is used for almost anything that needs an economical, small connector with many pins. It is available with high-frequency coaxial inserts and for high current or high voltage, as well as for the common low-energy data signaling.

"My real point is that there is no such thing as a DB9 or DB15 connector in the OEM (*o*riginal *e*quipment *m*anufacturer) catalogs. This is a product of misuse over many years of computer sales just as 'kodak' and 'frigidaire' have been in the past. The D comes from the D-shaped outer shell, which is a quick and easy polarization scheme. Although they are [physically] large by current standards, the design series is called a D-subminiature connector. The second letter, such as the 'B' in 'DB' is an identifier for the shell size. The number after the shell size is the number of pins within the connector. The last symbol of the part number is a P for 'pin' and S for 'socket'. The 9-pin size used commonly for serial ports should be called a DE-9P. The 15-pin size used for joysticks and midi connectors is a DA-15S. Obviously the 25-pin serial-chassis port is a DB-25P and the parallel port is a DB-25S. The mating parallel cable end is a DB-25P. There are also DC-37 and DD-50 connectors used in instrumentation.

"Please keep up the good work. The 'Q&A' section is always informative and useful and is often the first thing I read in **Poptronics**."

Gary, the confusion of the "DB" as applied to all connectors was something new to me, and I've been messing with this stuff for nearly 40 years. I guess we all sometimes get stuck using terms like that erroneously, whether it's "DB-15," "Crescent" wrench, "Channelock" pliers, "Scotch" tape, "Xerox" copies or "Kleenex." Sometimes the holders of the tradenames don't like the generic use of their names, but it sure shows who's getting credit for the original idea whether they had it or not.

Bugs, Taps, and Other Nasties

Q *An illegal extension has been placed on my telephone lines. I have plenty of evidence. Not only is the phone tapped, but my alarm system and computer are on the phone lines, allowing access to these items to be disrupted.*

How do I find where the extension has been placed or what type of telephone device is being used? Is there a typical place to attach a device? Also, all of this is being controlled by a remote-control device or devices, which I found out can be done through one of your magazine articles. The phone company is useless. What do you suggest? Any help is appreciated at this point. I live in a single-family home, and I know who is behind this and why. I just can't get the evidence the police need.—M.V., via e-mail

A We can assume here that all paranoia is aside and that there are no black helicopters on regular flights over your home. First of all, call the alarm company and make sure that you aren't interpreting as unauthorized traffic any calls in or out that are being initiated by their

www.americanradiohistory.com

system. I checked with ADT and they rarely make calls in to a residential alarm and then only when the home is unoccupied. Usually, the resident initiates any downloads from his keypad as instructed by an ADT technician. Most alarm companies operate in a similar manner.

Second, you didn't mention whether or not you had a satellite receiver system similar to DirecTV. Such a system might make occasional calls to the mother ship to upload pay-per-view billing and other such things with automatic use of the phone line that might be messing with your mind.

Also, if the bill is your indicator of fraudulent line use, check to see if there has been any calling card use. When we moved into our first home in 1978, our initial phone bills were in the $1500 to $2500 range. As it turned out, either whoever originally had that phone number still had a live phone card or a stolen phone card was being used—all kinds of international calls were being made and billed to us. Ma Bell took care of that in short order. It's easy for a thief to gather your phone card information while watching or listening to you at a public phone.

All that was more or less for any readers with similar problems. Your follow-up letter does indeed indicate that it is likely that there is a tap on your line that is being used for malicious purposes, so let's look at the possibility of a physical line tap. Since you're located in a single-family residence, you should be able to physically trace out the lines. Outside the home, there are a couple of spots that are easy to tap to check. First is the telephone company's pedestal where your line connects into the underground trunk lines. There are always two lines running into your home, even though only one may be in use. The second line is for, well, a second line or can be used as a back-up line in case the original line develops a defect. That way, the phone company doesn't have to lay a new cable right away. So, your neighbor could tie your line over to their second line at the pedestal, and it wouldn't be obvious unless you were deliberately looking for something like that.

Problem is, I think it's just as illegal for you to open that pedestal as it is for someone to tap your line, so you might have to have some phone company help here, like it or not. I guess you could always call them up with a lie, "Hey, there's this scrawny little guy in a purple jacket that has that gray (green, whatever) telephone box in the yard open and is messing with the stuff inside. It looks like he's rewiring it or something." Then get ready to meet the phone guy there when he shows up ... but make sure you're not a scrawny little guy in a purple jacket, or you'll have to change your original call a bit. At this time, you can indicate to the phone guy that maybe someone was trying to tie into someone else's phone line to steal service so that he'll think to look for line crossovers.

Another spot is where the line enters your house. These days, it usually goes underground from the pedestal and then goes into a little box where there's a ground wire heading over to a ground stake or to the ground on the electric meter base. Otherwise, the box and ground could be inside the house where it connects to a cold water pipe. Most phone installations made since 1980 include a Subscriber Interface box, where a short cable with an "RJ" connector plugs in so that you can isolate your home from the incoming line for troubleshooting purposes. Wherever the phone line enters your house, you should be able to physically trace every inch of it to insure that there are no taps or other unauthorized devices on the

HOW TO GET INFORMATION ABOUT ELECTRONICS

On the Internet: See our Web site at *www.poptronics.com* for information and files relating to **Poptronics** and our former magazines (**Electronics Now** and **Popular Electronics**) and links to other useful sites.

To discuss electronics with your fellow enthusiasts, visit the newsgroups *sci.electronics.repair, sci.electronics.components, sci.electronics.design*, and *rec.radio.amateur.homebrew*. "For sale" messages are permitted only in *rec.radio.swap* and *misc.industry.electronics.marketplace*.

Many electronic component manufacturers have Web pages; see the directory at *www.hitex.com/chipdir/*, or try addresses such as *www.ti.com* and *www.motorola.com* (substituting any company's name or abbreviation as appropriate). Many IC data sheets can be viewed online: *www.questlink.com* features IC data sheets and gives you the ability to buy many of the ICs in small quantities using a credit card. You can also get detailed IC information from *www.icmaster.com*, which is now free of charge although it formerly required a subscription. Extensive information about how to repair consumer electronic devices and computers can be found at *www.repair faq.org*

Books: Several good introductory electronics books are available at RadioShack, including one on building power supplies.

An excellent general electronics textbook is *The Art of Electronics*, by Paul Horowitz and Winfield Hill, available from the publisher (Cambridge University Press, 800-872-7423) or on special order through any bookstore. Its 1125 pages are full of information on how to build working circuits, with a minimum of mathematics.

Also indispensable is *The ARRL Handbook for Radio Amateurs*, comprising over 1000 pages of theory, radio circuits, and ready-to-build projects, available from the American Radio Relay League, Newington, CT 06111, and from ham-radio equipment dealers.

Back issues: Copies of back issues of and past articles in **Electronics Now**, **Popular Electronics**, and **Poptronics** can be ordered on an "as available basis" from Claggk, Inc., Reprint Department, P.O. Box 12162, Hauppauge, NY 11788; Tel: 631-592-6721. To ensure receipt of the correct material, readers must supply complete information on the article or issue that they wish to buy.

Poptronics and many other magazines are indexed in the *Reader's Guide to Periodical Literature,* available at your public library. Copies of articles in other magazines can be obtained through your public library's interlibrary loan service; expect to pay about 30 cents a page.

Service manuals: Manuals for radios, TVs, VCRs, audio equipment, and some computers are available from Howard W. Sams & Co., Indianapolis, IN 46214; (800-428-7267). The free Sams catalog also lists addresses of manufacturers and parts dealers. Even if an item isn't listed in the catalog, it pays to call Sams; they may have a schematic on file which they can copy for you.

Manuals for older test equipment and ham radio gear are available from Hi Manuals, PO Box 802, Council Bluffs, IA 51502, and Manuals Plus, 130 N. Cutler Dr., N. Salt Lake, UT 84054.

Replacement semiconductors: Replacement transistors, ICs, and other semiconductors, marketed by Philips ECG, NTE, and Thomson (SK), are available through most parts dealers (including RadioShack on special order). The ECG, NTE, and SK lines contain a few hundred parts that substitute for many thousands of others; a directory (supplied as a large book and on diskette) tells you which one to use. NTE numbers usually match ECG; SK numbers are different.

Remember that the "2S" in a Japanese type number is usually omitted; a transistor marked D945 is actually a 2SD945.

Hamfests (swap meets) and local organizations: These can be located by writing to the American Radio Relay League, Newington, CT 06111; (*www.arrl.org*). A hamfest is an excellent place to pick up used test equipment, older parts, and other items at bargain prices, as well as to meet your fellow electronics enthusiasts—both amateur and professional.

www.americanradiohistory.com

line, checking each extension and breakout point where an extension attaches to the main line coming in. Every line should be clean or any wires and devices identified as being yours, all the way from the entrance into your home up to your end device—be it phone, modem, answering machine, or alarm system.

I have heard of instances where taps were illegally initiated by phone company personnel for purposes of stalking. If the person you suspect works for the phone company, your line can just as easily be in his house with all the connections being made electronically at a switcher. If such activity can be proven, that employee will be out of a job instantly and probably be up on criminal charges to which you could likely add civil charges.

I've always been irritated at the number of phone installations (mine is one) where the interface box is on the outside of the home. Any thief can walk up and plug a telephone into that jack and make all sorts of long-distance calls at your expense. If your "evidence" consists of a lot of unauthorized long-distance calls on your bill, this may be a hot spot. Most outside boxes have a little hasp affair that you can loop a small padlock through to make that access a little more difficult. Just make sure that if you call in a phone problem to take that lock off, if you're not going to be home "sometime between the hours of 8 a.m. and 8 p.m."

You indicated that you have been referred to the California Public Utilities Commission. That sounds like the prudent direction to take. I know that it seems like the "buck" is being passed with every agency you contact. It's likely that these agencies really don't know how to deal with such things and you just have to land on the right one accidentally. Maybe we have some readers with professional expertise on such things who can tell us whom to contact so that you can get some positive action.

Ignition Coil For A Tesla Coil

Q *I am building the Tesla coil from the November 1999* **Popular Electronics,** *but I'm unable to find the two ignition coils. The type listed is a Wells LU800. I have looked online and have not been able to find any place that carries them. Is there a part number equal to it or a place where can I get one? Supposedly it is used in a Toyota, but I don't know make, model or year.—D.W., via e-mail*

A D.W. also posted his question on the Gernsback Forum (*www.gernsback.com*) and friend Ron H. suggested that he try a search on the Google search engine. Google does seem to do well for us electronic types and that search does turn up the information that a substitute for the coil is a Borg-Warner E40. Another suggestion was to use a "cheap transistor ignition coil, i.e., mid to late 70s Dodge." The Google search engine is found at *www.google.com*.

Voltage-Divider Errors

Reader Bill Stiles is a frequent contributor to this column (in other words, he catches a lot of my errors) and agrees that those series resistors that have been discussed lately, if all identical, will have an overall tolerance that is no larger than the tolerance of an individual resistor.

However, he points out that you don't want to be swayed into thinking that the tolerance of the voltage output of a voltage divider using such resistors will be within that of the resistor tolerances. He cited a common example of a simple two-resistor divider typically used to increase the range of a *d*igital *p*anel *m*eter (DPM) from 200mV to 200V, where you would use a 1000-to-1 divider.

More accurately, the resistor values would be exactly 99.9K ohms for R1, if R2 were established at 100 ohms as shown in Fig. 1. These values will produce an output of exactly 100mV when you have an input of 100V. I might add

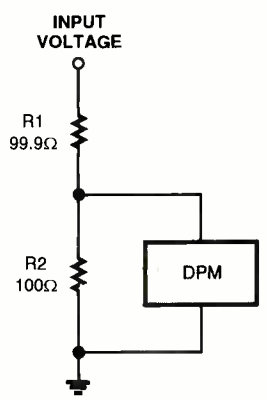

Fig. 1. A simple 1000:1 voltage divider can allow a digital panel meter with a 200-mV range to measure up to 200V, but tolerance variations can severely affect the accuracy of this circuit.

that the addition of a 10-megohm DPM across R2 has virtually no effect on this circuit, so I'll consider it to be negligible for purposes of error calculation. Bill notes that if the value of the large resistor increases by 1% AND the value of the small resistor decreases by 1%, the final output voltage will be almost 2% lower in value, exactly 98.0217 millivolts when it should be 100 millivolts. He points out that this problem occurs when the divider ratio is high. Had both of the resistors been of the same value, the output voltage would have only been off by 1%. Circuits like this need to have resistors with tighter tolerances to complement the accuracy of the DPM. He also notes that Mouser Electronics (*www.mouser.com*) sells resistors with 0.1% tolerances for critical applications such as this.

Again, if you're going for a higher ratio yet so that the DPM can measure over 200 volts, you'll have to start watching the voltage ratings of the resistors, possibly using series-connected resistors as we discussed in previous columns. I might also note that if you're working with ultra-precision resistors, treat them like you used to treat the old point-contact germanium transistors and heat-sink the leads with pliers during the soldering operation so that you don't threaten the resistor's nominal value with high temperatures. Bill, thanks for that important item of information.

The Whiners Are Back

I love for readers to write to offer their slant on some of the items that we've been discussing. A few months ago, a reader was having trouble with "whine" getting into his automotive VCR/TV system and we discussed several sources for that problem. Reader Chuck Budack said that he had a similar problem between his stereo control "head" and his external amplifiers. He solved his by using an "Audio System Ground Loop Isolator" from RadioShack (catalog number 270-054). He describes the device as a pair of isolation transformers designed for audio frequencies that allows the audio to pass through but blocks any ground plane differential between the equipment. It works in place of the standard RCA phono patch cable. He says that this device may be a fast and inexpensive fix for the original problem. Chuck, thanks for the tip. I normally think of ground-loop problems as producing "hum" in

www.americanradiohistory.com

120V_{AC} equipment and forget that the same "hum" in an automotive application is often the "whine" that was being heard.

Oscilloscope Construction

Q *I appreciate your extensive answers to write-ins. I have a project about which I would like some information. A long time ago, your predecessors had a project on a small oscilloscope that used a 1-inch tube, 115 volts, and some old-time electronics, but it still fit in a small box. Is it possible that this can be updated to modern solid-state technology and run on 12 volts?—G.K., Novato, CA*

A An oscilloscope construction project is a mighty intensive undertaking; and the only one that I can remember was in an early 70's issue of *Electronics Illustrated*, which was a Fawcett bimonthly publication rather than one of our predecessors. That project was a really neat triggered sweep oscilloscope with a calibrated vertical attenuator and a calibrated timebase, and it had the 1-inch *c*athode *r*ay *t*ube (CRT) that was usually used for things like frequency-shift-keying converter displays. Except for the CRT, it was all solid-state but had no integrated circuits and was built on perfboard. That particular article was in two parts; and I'm missing one of those magazines, so I have the pictorial layout but not the actual schematic diagram. As you said, it was fairly small, about the size of a hardcover Tom Clancy novel, but not quite as thick.

Although the little CRT would deliver a crisp, well-defined display, most folks today don't want to deal with the high-voltage circuitry and extra power needed to support it in a low-voltage world. They would rather see a scope modeled around a liquid-crystal display. You have to hit the surplus markets pretty intensively to find that little CRT. At the price that high-quality, high-performance, used scopes can be found, the only reason to build one from scratch is simply for your own construction experience. You're sure not going to save much money doing it that way; and you'll never get decent performance from the little guy without investing a lot of time, engineering, and greenbacks.

In your letter, you had other projects in mind for the magazine to consider, and I've forwarded that note to our editors for their consideration. Most of our articles stem from an author's suggestion rather than from an editor's request, so it's pretty difficult to satisfy a reader's request for a specific type of construction project. However, if enough readers have an interest in the same type of project, the editors may contact an author within that discipline to see if they would be interested in developing something along those lines.

New Topics on the Forum

Q *I had a question that I would have posted on the* **Poptronics** *forum, but I'm still trying to find out how to post a new question. My browser doesn't seem to give me the option.—S.E., via e-mail*

A There are several forums associated with **Poptronics**. All forums are accessible at the *www.poptronics.com* site by clicking on "Forums" on the left-hand side. Navigation through the "new" forums is tremendously more difficult. However, they do have the capability of easily posting drawings, a feature that the old forums did not have unless you were heavy into HTML. The new forums make posting any .bmp or .jpg file as easy as a few mouse clicks.

One of the problems of the old electronics bench forum, which by the way is still the most popular, is that you have to wait for it to load the entire page before you come to the "post new topic" button at the very bottom. That isn't very convenient for most of us. That's why the first time most of us did this, we'd wait for that button, click on it, and save the resulting Web page in our Favorites. Then new postings were very fast. To avoid going through all of that, here's the URL of the "Post New Topic" page on the "old" Electronics Bench forum: *www.gernsback.com/HyperNews/edit-response.pl/forums/ElectronicBench.html.*

There have been some attempts to coerce the forum folks to place that "new post" button at the top of the page, but it may be that it's not being moved so that folks will want to use the "new" forum instead. I don't think it's working if that's the case.

Over-The-Horizon Model Planes

Q *I have an R/C remote control B-2 bomber that has a range of half a mile. Is it possible to modify the controller with a tunable wireless FM transmitter to gain a farther range? Or is there another way to modify it? It's a three-channel, 72-MHz, fully proportional Pro-style transmitter.—W.R., via e-mail*

A We've come a long way from the days when you used to get dizzy flying a model airplane, haven't we? With words like "half a mile," I'm trying to imagine finding a dot in the sky that I'm trying to control from the ground. If you had full-bore telemetry and video feeds back to you, it would be more like using *Flight Simulator* rather than flying a model airplane. And you want that dot in the sky to disappear by sending it even farther away! I'm not convinced that's a good idea. Those R/C transmitters are limited in their power for good reasons. Disappearing dots are one reason. FCC regulations are another. A third reason is that the more power the transmitter has, the more chance there would be of interfering with other models on the same or adjacent channels.

I hate to rain on your parade, but folks on the ground would probably prefer that you keep your airplane in sight and under control. The FAA also may have some input if you have the capability and propensity to fly a drone high enough to violate legal airspace. I can imagine all sorts of awful things happening with a high-power transmitter if you managed to get the plane two miles out, have it run out of fuel, and drop like a rock through someone's windshield on the Interstate.

Writing to Q&A

As always, we welcome your questions. Please be sure to include:

(1) plenty of background material,

(2) your full name and address on the letter (not just the envelope),

(3) and a complete diagram, if asking about a circuit; and

(4) type your letter or write neatly.

Send questions to Q&A, **Poptronics**, 275-G Marcus Blvd., Hauppauge, NY 11788 or to *q&a@gernsback.com*, but do not expect an immediate reply in these pages (because of our backlog). We regret that we cannot give personal replies. Please no graphics files larger than 100K. P

BUY BONDS

www.americanradiohistory.com

mailto: pic-tronics@gernsback.com

TJ BYERS

DC Motor Management

Often my columns are inspired by real-life experiences. This time it was a young friend (you might notice I like working with budding hobbyists, both young and old), who was having a problem with his bot. The problem was controlling the speed of the drive motors that give the bot motion. His bot would either stagger like a drunk or go in circles.

Such is the dilemma of the permanent-magnet DC motor often used for propulsion in robotics. While the advent of the PWM (*p*ulse-*w*idth *m*odulated) controller has tamed the DC motor considerably, it lacks one thing—speed control. The bot will go slower over carpet, faster over smooth flooring, slower uphill, and faster downhill.

In order to maintain a constant speed, some kind of feedback is needed—something that tells the controller when to increase power when the going gets tough and to back off power when all the motor has to do is coast. The traditional way to monitor rotational speed is to attach an encoder wheel to the shaft and count the number of times the shaft goes round. Unfortunately, it's not a practical solution for most robotics projects.

However, there is a trick that can be used to measure the speed of a DC brush motor that doesn't require an external encoder or sensing resistor. It relies on the "noise" generated by the brushes.

Small motors usually have two brushes and three or five commutator segments. Consequently, there are six or ten places per rotation where a brush hits the space between commutator segments and produces a small electrical spike. While slightly less accurate than an encoder, this spike can be used to measure the RPM of the motor.

PIC'n Up The Pace

This column isn't a project (although you can buy a kit of parts to play with the concept), so feel free to experiment with different drives and offset voltages. You'll understand as we go along. Follow the bouncing code (and I do mean bouncing, because I took the liberty of tightening it up considerably to fit in the pages I have) in Listing 1.

The program determines the speed of the motor by counting the time between the pulses. The slower the motor spins, the more time it takes between commutator pulses, and the higher the number. To handle the counting, I used the inter-

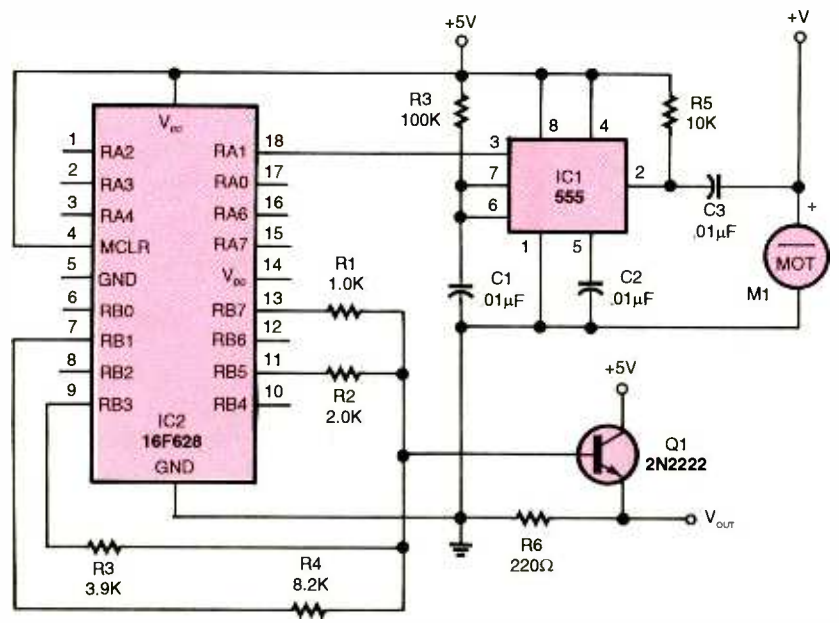

Fig. 1. The lower the RPM of the motor, the more current flows through Q1. The V_{out} controls the torque and speed of a small DC brush motor.

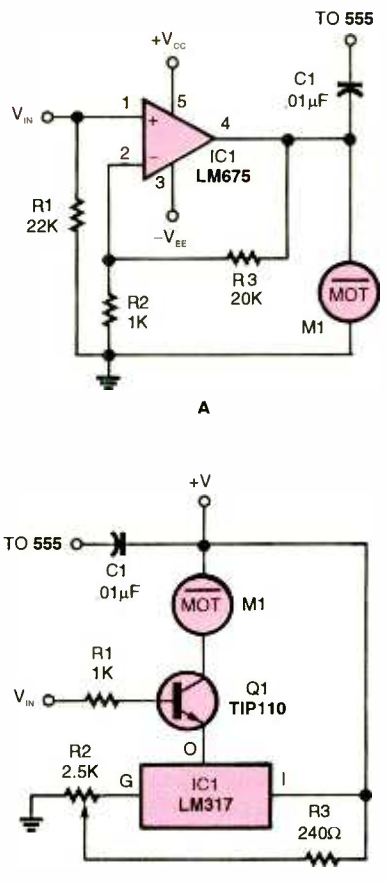

Fig. 2. Here are two examples of drivers that maintain the constant speed of a DC motor. These drivers aren't carved in stone, but are meant to demonstrate. Experimentation is strongly urged.

www.americanradiohistory.com

rupt routine (the ===Interrupt Service Routine (ISR)=== header in the code). Each time the motor generates a pulse, the PIC generates an interrupt that starts the TMR0 counter.

Hang on, because we're only part way there. Generally, commutator motors are filthy—they generate more than one pulse per crossing (which is why they are heavily filtered for EMI). So what I did was to accumulate the period for ten pulses instead of one. In effect, I'm spreading out the error over a longer period of time, which makes it more accurate. This binary value is then output on Port B. The slower the speed, the larger the binary number.

Now comes the nifty part. Rather than use a DAC (*d*igital-to-*a*nalog converter) chip, I decided to use weighted resistors for the digital conversion. The resistors are in increments of base-2, so that the highest current flows when the most significant bit is turned on. Let's say the output code is 00000010—this tells us that the RPM is high and the time between pulses is very low. In this state, only the 8.2-k resistor is conducting. As the motor speed slows down, this time will increase to something like 10000000, which kicks in the 1-k resistor that has eight times the current flow through Q1 (See Fig. 1.). At full power, the binary output will read 11111110.

I know this code is a little more advanced than we've talked about in past columns, but I couldn't find a reason for a module. However, it gives me a good excuse to introduce the interrupts and register coding, which are extremely annotated in the Listing. Therefore, I don't need to discuss it here; you can read it yourself in Listing 1. Let's get to the hardware.

Time To Try

As the permanent-magnet DC motor loses speed, it requires more current to keep it going. The code given here does just that. However, you need a place to start—an established RPM for a reference. I thought about this at length and came up with several solutions—but none that would work for all situations. So, I'm leaving that for you to figure out. However, I can make some recommendations (See Fig. 2.).

Circuit (a) uses a high-power op-amp with an operating voltage of 16 to 60 volts and an output of 3 amps. You can replace the LM675 with a smaller op-amp and use it to drive a transistor that

LISTING 1

```
PIC assembly code for a small DC motor controller
   include          <P16F628.inc>
   __config  _INTRC_OSC_CLKOUT & _WDT_OFF & _PWRTE_OFF


;=Date: 08/00/02

;=Description:
;This code monitors RA1 for an incoming pulse. When it's found, we start TMR0
counting.
;When the signal rises, we move the value of TMR0 to PORTB which represents
the time elapsed.
;There is a resultant voltage on PORTB by way of a resistor ladder network.
;TMR0 overflow time = 256 - (TMR0 * Prescaler) / (Freq / 4)
;@ 60mS, RPM is 1000 (our cutoff value). Divide 60mS by 256 and we get 234µS
;per TMR0 increment. With the internal osc. running @ 4MHz,
;that's 1MHz internal clock divided by 256:1 prescaler=256µS
;=======================================

;===RAM variables====
pcount   equ      0x20
;===

;===Constants used===
#DEFINE          NumPulses        .10      ;# of pulses from communtator
;===

;===Vectors (Reset/ISR)===
   org   0
   goto  main
   org   4
   goto  ints
;===


;===Interrupt Service Routine (ISR)===

;Triggered on every pulse from motor.

ints     bcf      INTCON,INTF              ;Clear the interrupt
   btfsc  INTCON,T0IF              ;Test if TMR0 overflowed
   goto   stalled            ;It did, motor is stalled
   movfw          pcount             ;No, proceed with caution...
   sublw NumPulses                   ;W=NumPulses-W
   btfss  STATUS,Z                   ;If Z=1 then we're starting fresh.
   goto   $+2                        ;Z=0, we're still counting pulses
   clrf   TMR0                       ;Begin counting pulses

   decfsz pcount,f ;Decrement pulse counter
   retfie                  ;TMR0 is still counting, return back to "main"
   movfw          TMR0                    ;Done counting pulses
   movwf          PORTB                   ;Move TMR0 value to PORTB
   movlw          NumPulses               ;Reload pulse counter
   movwf          pcount
   retfie                  ;Break out of ISR

stalled  bcf      INTCON,T0IF
   movlw          0
   movwf          PORTB
```


www.americanradiohistory.com

```
    retfie

;===


;===Main program===
;Initialize ports, set up RAM and sit in a constant loop.
;===

main    movlw   1                       ;Make PORTB,0 input; all others
are outputs
    tris    PORTB

    movlw       0                       ;Make RA4 input; rest output
    tris    PORTA
    movlw       0x07                    ;Turn off comparators so we can
use PORTA
    movwf       CMCON
    clrf    PORTB               ;Clear the ports
    clrf    PORTA

;           |-------------7-RBPU   - PORTB Pullup Enable
;           ||------------6-INTEDG - Interrupt Edge Select
;           |||-----------5-T0CS   - TMR0 Clock Source
;           ||||----------4-T0SE   - TMR0 Source Edge Select
;           |||||---------3-PSA    - Prescaler Assignment
;           ||||||--------2-PS2    - Prescaler Rate Bits(2-0)
;           |||||||-------1-PS1
;           ||||||||------0-PS0
    movlw       b'11000111'             ;Pullups off, prescaler set to 1:256
assigned to TMR0
    option

;           |-------------7-GIE  - Global Interrupts Enable
;           ||------------6-PEIE - Peripheral Interrupts Enable
;           |||-----------5-T0IE - TMR0 Overflow Interrupt Enable
;           ||||----------4-INTE - RB0 Interrupt Enable
;           |||||---------3-RBIE - RB Port Change Interrupt Enable
;           ||||||--------2-T0IF - TMR0 O/F Interrupt Flag
;           |||||||-------1-INTF - RB0 Interrupt Flag
;           ||||||||------0-RBIF - RB Port Change Interrupt Flag
    movlw       b'10010000'             ;Enable RB0 interrupt and global
interrupts
    movwf       INTCON
    movlw       NumPulses               ;Our constant number of motor
pulses to count
    movwf       pcount          ;Store it

loop
    goto    loop
;===

    end
```

matches your voltage and current requirements. I'm really proud of circuit (b) because of its simplicity. The LM317 voltage regulator biases the bottom end of the motor above ground using the 2.5-k pot. This sets the RPM range of the motor. Q1 in Fig. 2B acts as a variable resistor; and because it's configured as an emitter follower, it has its own self-regulation built in. Don't forget to use a large heatsink for Q1, and remember that the maximum current is limited to 1.5 amps (0.5 amp for TO-39).

Notice that I only used every other most-significant bit of the Port B output. I did that on purpose. Remember, I said that this method was fairly accurate, but not as accurate as an encoder. Well, 4 bits are good enough for most applications. Referring to Fig. 1, you can insert additional resistors on the empty outputs (they are part of the code) to increase the resolution to 7 bits if you wish. For example, a resistor on RB6 is 1.5k and RB4 is 3.0k. That's the pattern, except for RB0 on Port B.

If you discover that the range of V_{out} doesn't match up to your requirements, change the value of Q1 for higher or lower gain as needed and/or the 220-ohm emitter resistor.

I added one more feature. If the motor stalls (that is the TMR0 counter overflow), RB0 goes high. Do what you wish with that signal. What I'd do is check a sensor for a blocked path—like a brick wall the bot is trying to push down. Maybe include a routine that puts the motor into reverse and makes a 180-degree turn?

That's all for this month. This should give you plenty to play with. Next month, I'll do something in keeping with the Holidays. 'Til then, have fun.

If you have any questions or comments for me, then send an e-mail to tjbyers@aol.com. P

FOR EXPERIMENTERS

A kit of parts suitable for experimentation is available for $22 from Futurlec, 1133 Broadway, Suite 706, New York, NY 10010 (*www.futurlec.com*). The kit includes a programmed PIC, perfboard, IC sockets, and a heatsink. A programmed PIC is also available separately for $12.

Poptronics

Interactive Edition

Projects...Courses...Articles...& more

Read it on the WEB!

- **An e-magazine for everyone who loves electronics.**
- **Interesting articles and related items.**

www.poptronics.com/interactive

www.americanradiohistory.com

mailto: amazingscience@gernsback.com

JOHN IOVINE

Bi-Pedal Walker, Part 5

Welcome to the final installment of our bi-pedal walker project. For those who have been following this series of articles, the bi-pedal robot does walk. I have placed a short movie file at the following address for those who wish to see the bi-pedal robot walk. (*www.imagesco.com/catalog/biped/walker.html*) The starting frame for the movie is shown in the accompanying photograph.

This has turned out to be a very challenging project, more challenging than I had imagined in the planning stage. It taught me a lot about designing and building artificial legs, bi-pedal robots in general, and walking algorithms. Everything I have learned I have tried to describe to you in these series of articles. Looking back at this project (hindsight really is 20-20, as they say), I realized some things that could have been done differently to simplify it.

Primarily, I could have stayed with the IBM PC servomotor controller. At the time I got too tied up in getting full power (torque) from the servomotors for the robot to stand up and walk on its own. The two PIC controller circuits I built after that only improved the servomotor performance slightly and not to the point where it contributed much to the algorithm development.

I realized that to use the PC servomotor program effectively I only needed to change the bi-pedal robot stand setup. Instead of a setup where the legs can lift and walk with the stand, it would have been better to attach the legs to a much taller stand where the legs would hang freely without touching the ground. Doing it this way means that full power from the servomotors is not required to lift and carry the stand. The adjustment and positioning of the servomotor legs to develop a walking gait could take place in midair. I feel the pulse-width numbers generated from this arrangement would be just as accurate. By "just as accurate," I mean the pulse-width numbers would need to be adjusted and fine-tuned in the final program.

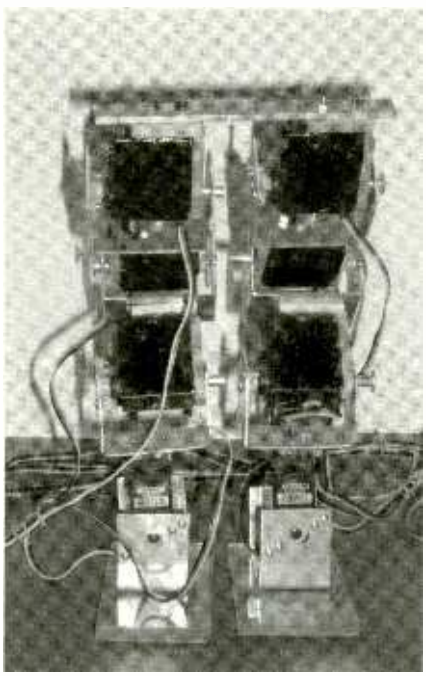

In this starting frame from the action-packed video featuring the bi-pedal robot, we can see the finished product of this five-part series in motion and how all the parts fit together.

Fine-Tuning the Program

When I compiled the walking program based upon the pulse-width numbers I obtained in my previous experiments, the robot didn't walk. The numbers were in the ballpark, but not hitting a home run. The reason is that without the display routine to slow down the program the microcontroller updated the walker servomotors at 50 Hz and developed the proper torque in each servomotor. Having the proper torque shifted the positions of the servomotors. To fine-tune the program, I had to start from the very beginning, with the biped's starting pulse-width numbers, when standing still.

For instance, the old starting numbers provided last month were:

Left Leg Servomotors				
	0	1	2	3
Start	207-	201-	152-	152-

Right Leg Servomotors			
4	5	6	7
208-	199-	176-	169-

Note: In last month's column, there was an error in the table listing the leg movements. Numbers 0-3 and 4-7 were moved one column to the left. They are correct above. —Editor.

I entered the pulse-width numbers for the starting standing position and put the robot in a holding routine. I needed to change the pulse-width number for servomotor number 4 to get the bi-pedal robot to stand properly. The new starting numbers are almost the identical to the old numbers—servomotor number 4's pulse-width number changes from 208 to 214.

With the standing-still numbers corrected, I could add the next movement. Before I did so, I created a two-second standing-still loop before the program continued on to the following movements.

The next movement added to the program was the tilt-ankle movement. I placed this movement after the two- second standing-still routine and before the holding routine. So, when the program runs, it stands still for two seconds and then goes to the tilt routine where the movement is held.

Holding the "tilt" movement allows you to examine the tilt and decide if any correction is needed. If an adjustment is needed, the pulse-width number is changed; and the program is run again to check the results. This adjustment-check cycle continues until the tilt pulse-width number is the best you can make it.

www.americanradiohistory.com

LISTING 1
PICBasic Pro Walker Program

```
Declare Variables

B0 VAR BYTE
B1 VAR BYTE
B2 VAR BYTE
B3 VAR BYTE
B4 VAR BYTE
B5 VAR BYTE
B6 VAR BYTE
B7 VAR BYTE
B8 VAR BYTE
B9 VAR BYTE


'Initialize Variables

B0 = 207          'Servomotor 0
B1 = 201          'Servomotor 1
B2 = 152          'Servomotor 2
B3 = 152          'Servomotor 3
B4 = 214          'Servomotor 4
B5 = 199          'Servomotor 5
B6 = 176          'Servomotor 6
B7 = 169          'Servomotor 7
B8 = 0
B9 = 0

start:

'loop to hold position 2 seconds before moving

B8 = B8 + 1

GoSub servoout

IF B8 < 100 Then GoTo start

B8 = 0                                          'reset loop counter

'Leg Movements
'_____________________________________________________________________
'Need Slow Speed Routine
M1:                                             'first movement Tilt
 B8 = B8 + 1
        IF B9 = 3 Then M12
        B9 = B9 + 1
        GoTo M13
 M12:
 B7 = B7 - 1
 B3 = B3 - 1
 B9 = 0
 M13:
 IF B7 < 156 Then
        B7 = 156
        EndIF
 IF B3 < 139 Then
        B3 = 139
        EndIF
```


www.americanradiohistory.com

```
GoSub servoout
IF B8 < 50 Then GoTo M1

B8 = 0                                          'reset loop counter
'-------------------------------------------------------------------
B1 = 225
B2 = 167
B0 = 193
M2:                                             '2nd Movement Lift Leg
B8 = B8 + 1
GoSub servoout
IF B8 < 30 Then GoTo M2

B8 = 0                                          'reset loop counter
'-------------------------------------------------------------------
B7 = 169
B3 = 152
M3:                                             '3rd Movement Straighten Out
B8 = B8 + 1
GoSub servoout
IF B8 < 30 Then GoTo M3

B8 = 0                                          'reset loop counter
'-------------------------------------------------------------------
B5 = 215
M4:                                             '4th Movement Right Knee
B8 = B8 + 1
GoSub servoout
IF B8 < 30 Then GoTo M4

B8 = 0                                          'reset loop counter
'-------------------------------------------------------------------
'Need Slow Speed Routine
M5:                                             '5th Movement Tilt opp. side
B8 = B8 + 1
      IF B9 = 3 Then M52
      B9 = B9 + 1
      GoTo M53
M52:
      B3 = B3 + 1
      B7 = B7 + 1
      B9 = 0
M53:
      IF B3 > 168 Then
            B3 = 168
            EndIF
      IF B7 > 185 Then
            B7 = 185
            EndIF
GoSub servoout
IF B8 < 90 Then GoTo M5

B8 = 0                                          'reset loop counter
'-------------------------------------------------------------------
B1 = 201
B4 = 192
M6:                                             '6th Movement
B8 = B8 + 1
GoSub servoout
```


www.americanradiohistory.com

```
IF B8 < 30 Then GoTo M6

B8 = 0                                    'reset loop counter
'_____________________________________________________________
__

B2 = 152
B6 = 185
M7:                                       '7th Movement
B8 = B8 + 1
 GoSub servoout
 IF B8 < 30 Then GoTo M7

B8 = 0                                    'reset loop counter
'_____________________________________________________________
___

B5 = 199
M8:                                       '8th Movement
B8 = B8 + 1
 GoSub servoout
 IF B8 < 30 Then GoTo M8

B8 = 0                                    'reset loop counter
'_____________________________________________________________
B7 = 169
B3 = 152
M9:                                       '9th Movement
B8 = B8 + 1
 GoSub servoout
 IF B8 < 30 Then GoTo M9

B8 = 0                                    'reset loop counter
'_____________________________________________________________
B6 = 176
M10:                                      '10th Movement
B8 = B8 + 1
 GoSub servoout
 IF B8 < 30 Then GoTo M10

B8 = 0                                    'reset loop counter
'_____________________________________________________________
B0 = 207
B4 = 214
M11:                                      '11th Movement
B8 = B8 + 1
 GoSub servoout
 IF B8 < 30 Then GoTo M11

B8 = 0                                    'reset loop counter
'_____________________________________________________________
__

hold:                                     'Hold position
GoSub servoout
GoTo hold
'_____________________________________________________________
servoout:

'Output servomotor position(s)
```


www.americanradiohistory.com

```
'Left Leg

PulsOut PORTB.0, B0          'send current servo 1 position out
PulsOut PORTB.1, B1          'send current servo 2 position out
PulsOut PORTB.2, B2          'send current servo 3 position out
PulsOut PORTB.3, B3          'send current servo 4 position out

'Right Leg

PulsOut PORTB.4, B4          'send current servo 5 position out
PulsOut PORTB.5, B5          'send current servo 6 position out
PulsOut PORTB.6, B6          'send current servo 7 position out
PulsOut PORTB.7, B7          'send current servo 8 position out

Pause 5
Return
'
```

When satisfied with the tilt movement, insert the next movement after the tilt routine and before the hold routine. Each movement is checked, adjusted, and checked again until optimized. I continued in this manner, working my way through the entire sequence of movements that make up one whole step. Once each movement is optimized in the program, I set up a small counter for the bi-pedal robot to take three forward steps in a row.

A Little More On the Tilt

Tilting the robot is critical to shifting its weight from one leg to the other. One neat thing I found to do was to tilt both ankles to the left or right, instead of just one. This shifted the robot's weight more easily.

When tilting the robot, I also added pulse-width number delay inside the routine. This delay was necessary because the robot would start and stop so quickly that the tilt movement could topple the robot.

Schematic

The PIC microcontroller schematic is shown in Fig. 1. Not all of the bi-pedal servomotors are shown in the schematic; only servomotor 0 is shown as a reference. All other servomotors (1–7) are connected in a similar manner. You can see from the schematic that there are five open I/O lines on the 16F84 microcontroller that may be used for control functions. A simple walking PICBasic program is provided elsewhere. This program produces a little jerky walk, but it does the job. It is also suited for modifying to fine-tune the program movements, as described earlier.

I subsequently wrote a more sophisticated program that uses a smoothing (slow speed) algorithm throughout all the step movements. This was the program used to generate the bipedal.avi movie on the Web site. In contrast to the program above, it also combines a few step movements when possible. The program source code for this program will also be available from the same Web page listed above for the .AVI movie.

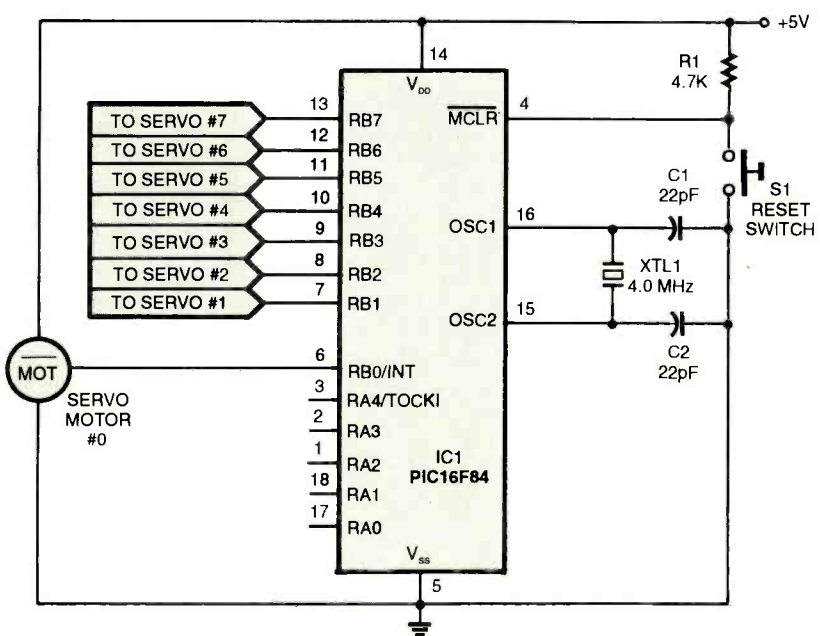

Fig. 1. The PIC microcontroller schematic is shown above. Not all of the bi-pedal servomotors are in the schematic; only servomotor 0 is shown as a reference. All other servomotors (1–7) are connected in a similar manner.

Future Walking Algorithms

The walking programs presented are basic. There is much room for improvement in the walking algorithm. As an example, once when I was re-writing the original program, I inadvertently reversed a few movements and the biped almost walked backwards. Other improvements will incorporate improved strides, higher steps (maybe even stair climbing), and turning. Turning, I think, will be a little tricky and may require a design change. P

To learn how to talk with your kids about tough issues, like sex, AIDS/HIV and violence, call

1-800-CHILD-44

and get your free guidebook.

Ad Council

CHILDREN NOW

KAISER FAMILY

www.americanradiohistory.com

SERVICE CLINIC

mailto: serviceclinic@gernsback.com

SAM GOLDWASSER

WARNING! The devices described in this article involve the use of materials and substances that are hazardous to health and life. DO NOT attempt to implement or use the information contained in this article unless you are experienced in the construction and safety considerations that apply to high-voltage devices of this nature. Although all possible measures have been taken to ensure the accuracy of the information presented, neither Gernsback Publications Inc., nor the author are liable for damages or injuries, misinterpretation of directions, or the misapplications of information.

Understanding And Testing Low-Power Laser Diodes

Laser diodes are now used in a wide variety of electronic equipment including CD and DVD players and drives, other optical storage devices, laser printers, barcode scanners, and perimeter alarm systems—and, of course, laser pointers. When repairing such equipment, it is desirable to be able to test the *l*aser *d*iode (LD). When any of these devices are retired (except possibly for laser pointers), the failure is often not the laser diode, and salvaging them for other uses is possible. This "Service Clinic" deals with some of these issues for the typical low-power laser diodes in consumer electronics equipment.

Safety, First

Despite their small size and low input power, laser diodes may still present a significant hazard to vision. This is especially true where the output is collimated and/or invisible (near IR) and/or higher power than the typical 3 to 5 mW. At least, you don't have to worry about getting zapped by any high voltage (as in a HeNe or argon laser).

Never look into the beam of any laser—especially if it is collimated. Use an indirect means of determining proper operation such as projecting the beam onto a white card, using an IR detector card or tester (where needed) or laser power meter.

Laser diodes in CD players operate at 780 nm (near IR, virtually invisible). While they are safely tucked away inside the optical pickup, risks are quite minimal because the output is usually less than 1 mW and the emerging beam is highly divergent. However, if modifications are made to the pickup (such as removing the objective lens), a 5-mW collimated beam may be produced that can burn holes in the retina without your even being aware there is a problem.

Here is an assortment of some laser diodes that can be found in common electronic equipment that you might have lying around.

Common visible red laser diodes, diode laser modules, and laser pointers produce 1 to 5 mW at various wavelengths between 670 and 635 nm. When collimated (as in the case of a module with internal optics or a laser pointer), the entire beam can enter the eye and burn holes in the retina. Note that light at 635 nm appears more than five times as intense as light at 670 nm. Therefore, the apparent brightness of a source is not a reliable indication of its actual optical power output.

Currently, green laser pointers are not simple diode lasers but are *D*iode-*P*umped *S*olid-*S*tate *F*requency-*D*oubled (DPSSFD) lasers (this may change in the future, however). For a given power, green appears substantially brighter than red wavelengths, but they are also limited to a maximum power of 5 mW. However, since there is a high-power IR laser diode inside a green pointer and not all such pointers include an adequate IR-blocking filter, there could be other dangers lurking even if the green output is weak or dead. With both these lasers, the beam from the bare laser diode is highly divergent. Therefore, it's less of a hazard since the lens of the eye cannot focus it to a small spot. However, there is still no reason to look into the beam.

Writeable optical drives (WORM, CD-R) may use IR laser diodes producing tens of mWs. A typical CD-R drive sets the laser power at 3 to 5 mW for read and 25 to 30 mW for write. Various types of laser cameras and laser typesetters may use laser diodes of hundreds of mWs. These lasers are extremely dangerous, even if not that well collimated. Furthermore, they also use near-IR wavelengths so that there is essentially no warning that a beam is present. In fact, since the response of the human eye to near-IR radiation results in a weak indication of red light, one may come to the false conclusion that the output is a weak visible beam. The actual optical power is 10,000 times higher, and the damage would already been done.

Much higher power visible and IR diode lasers are available and becoming more common and affordable with

www.americanradiohistory.com

the popularity of diode-pumped solid-state lasers (including green laser pointers that contain a high-power IR laser diode). These devices represent an even greater danger to vision and potentially even a risk of heat damage or fire from a focused beam.

Follow These Guidelines

While laser diodes and LEDs share some similarities, laser diodes are much more sensitive to EVERYTHING and will die with the least provocation. To minimize the chance of damage to your precious laser diodes during assembly, rework, or removal from equipment, read and follow the guidelines below. Some of these apply only to those using optical feedback, while others apply to all types.

- Keep the LD (remember LD is laser diode) in its original anti-static packaging until ready to install or poke it in anti-static foam (for salvaged diodes).

- Keep the laser-diode leads shorted together with some fine wire or other means before installation, while soldering, until the driver is fully connected.

- Where the LD needs to be attached with a connector (it isn't permanently installed in a circuit), add a parallel combination of a small capacitor, resistor, and reverse-protection diode. Some typical values: 1 nF, 1K, 1N4148 for a low-power diode; or 0.01µF, 100K, 1N4148 for a 1-watt pump diode.

- Take reasonable ESD precautions including the use of a grounded wrist strap. Don't work in a wool sweater with your feet rubbing on an Oriental wool carpet!

- When soldering, minimize heating of the LD itself by soldering as quickly as possible. Pre-tin the wires or pads to which the LD will be attached.

- Use a properly grounded temperature-controlled soldering iron with a fine-point tip. A 100-watt Weller soldering gun isn't the right tool for reworking or assembling a fine-line printed circuit board!

- Provide adequate heatsinking or a *T*hermo*E*lectric (TE) cooler along with the proper mounting of the diode to assure that temperature of the diode itself never exceeds 35 to 40° C.

- Use only a driver that is guaranteed to have no overshoot or reverse-polarity spikes. Even if the diode came with complete test data, assume that your environmental conditions may differ by enough to affect key parameters like monitor photodiode sensitivity—start low and work up to rated power using a proper measuring technique. Make sure the current limit is set to a safe value for the diode—optical feedback can get confused.

- Double-check your pin/terminal connections. For bare LDs (especially high-power ones), the heatsink is almost always the Anode (positive) and the top terminal is the Cathode (negative). This is the reverse of what most engineers expect! For packaged LDs, there is no standard! Close is only valid in horseshoes and hand grenades—with LDs, it often means total destruction!:-)

- For bare LDs, avoid getting anything on the output facet. Even a single speck of dust can cause instant permanent damage to the diode. Once a system is completely built, it should be sealed, preferably with dry nitrogen, to prevent contamination. For packaged high-power LDs, anything on the output window will likely be burnt to a crisp, which may damage the window.

- Avoid inadvertent reflection of the diode's output back toward the diode. Such reflections can interfere with lasing, resulting in excessive current for optical-power feedback-regulated diodes.

Finding Specifications For Salvaged Laser Diodes

The optical assemblies from CD players, laser printers, and other deceased or obsolete equipment are a fabulous source of low-cost LDs. It would be nice if something were known about their specifications!

- Measure the voltages, currents, signal waveforms, etc., before you rip it apart! However, it may not be possible to do so if the equipment was received in a non-working state. In addition, performing such tests on the laser-diode assembly itself can be risky. Hopefully, there will be labeled test points for laser-diode current, at least.

- Obtain schematics and/or service manual for the equipment. They might provide enough information to use the existing circuitry or to design circuitry to replace it. However, schematics are rarely available, at least not economically. Even if they are, the needed details may not be present. In addition, the actual circuitry is inside an integrated circuit, which is part of some overall control system, and may not be useful for stand-alone applications, anyhow.

- Reverse-engineer the circuits. Trace the component layout from the actual circuit board to determine what is going on and then duplicate or use them as desired. This strategy should permit laser-diode operating current and/or photodiode sensitivity to be determined. With some equipment, it isn't that difficult as the driver circuitry is relatively simple. With others, it is next to impossible.

- Identify the laser diode. Remove the LD from its mounting (taking appropriate ESD precautions) and hope it has a legible part number. Then, go to *www.qsl.net/k3pgp/Notebook/Ldspecs/ldspecs.htm* (K3PGP's Laser Diode Specifications) maintained by K3PGP (e-mail: k3pgp@qsl.net) or to an optical devices databook to locate its specifications. Many major laser diode manufacturers have Web sites with extensive information and search facilities.

www.americanradiohistory.com

Pinning Down Pinouts

Note that if you have a device from a CD player, CD-ROM, or other optical drive with eight or ten pins, it is a combined laser diode and photodiode (PD) array in a single package. You will first have to identify the three connections to the LD, itself. You should be able to determine this by tracing the wiring—there may even be markings on the circuit board. In many cases, the LD is driven by discrete components, whereas everything else goes to a preamp IC. Once the pinout of the LD is known, it can be treated in exactly the same way as the more common three-pin type.

The following assumes you know nothing about your device other than that it is a 3- to 5-mW laser diode with three pins. (There are a few with four pins and totally separate LD and PD connections, but these are not common.)

The first step is to identify which pair of terminals is the laser diode and photodiode. Your LD package will be configured like those in Fig. 1.

The most common polarities for low-power LDs seem to be the ones shown in Fig. 1B. The common (C or COM) terminal will then be connected to a positive supply (+V) relative to LDC and PDA. The PD will be reverse-biased. Its anode (PDA) will feed a load resistor and sense amplifier for the optical-feedback current-regulator. The LD will be forward-biased. Its cathode (LDC) will connect to a driver transistor and/or network to regulate LD current, based on the photodiode current and possibly a modulation circuit.

Where you can see both the pins and the inside of the LD package, it is easy to identify which pins go where. The COM will be connected to the case and the platform on which the laser diode and photodiode are mounted. There will likely be no actual pin visible inside the case.

The connection to the LD will attach via a fine wire to the laser-diode chip, which is near the front (optical window) of the package. The connection to the PD will attach via a fine wire to the PD chip mounted (probably at a slight angle) deep inside the package.

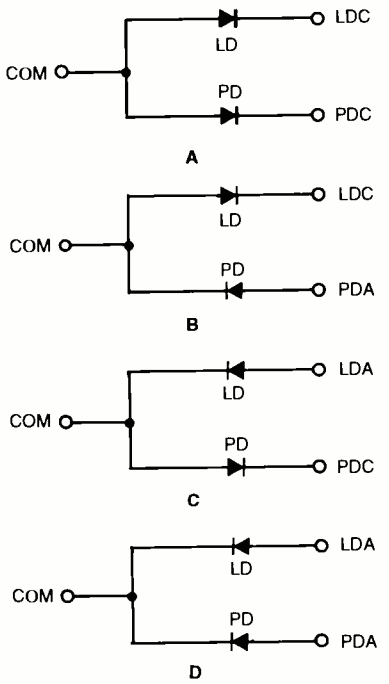

Fig. 1. The circuits above show the various configurations that can be found when testing the three-prong pins of a typical laser/photo diode assembly. Refer to the text for a detailed method of identifying the circuit.

If you can confirm these three connections by inspection, only the LD and PD polarities will need to be determined experimentally.

The following assumes you did not have this luxury. The PD's forward-voltage drop will be in the approximately 0.7-volt range compared to 1.7–2.5-volt for the LD. So, for the test below if you get a forward-voltage drop of under a volt, you are on the PD leads. If your voltage goes above 3 volts, you have the polarity backwards.

CAUTION: Some laser diodes have very low reverse-voltage ratings (e.g., 2 V) and will be destroyed by modest reverse voltage. Check your spec sheet. However, the LDs found in CD players seem to be happy with 4 or 5 volts applied in reverse. Of course, a shorted or open reading could indicate a defective LD or PD.

If the LD is still connected to its circuitry (probably a printed flex cable), it is likely that the laser diode will have a small capacitor directly across its terminals and that the optical-sensing PD will be connected to a resistor or potentiometer. In particular, this is true of Sony pickups and may help to identify the correct hookup.

Powering Up

Either of the circuits in Fig. 2 can be used to identify the proper connections and polarity and then to drive the LD for testing purposes. One approach that works for testing is to use a 0- to 10-V_{DC} supply with a current-limiting resistor in series with the diode (Fig. 2A).

If your power supply has a current limiter, set it at 20 or 25 mA to start. You can always increase it later. Alternatively, a fixed supply with a potentiometer can be used. (See Fig. 2B.)

Resistor R2 limits the maximum current. If you know the specs for your diode, this resistor is a good idea (and it protects your power supply, as well). You can always reduce its value if your LD requires more than about 85 mA (with R2 = 100 ohms).

The two capacitors provide some filtering to reduce the risk of a transient blowing the LD. Capacitor C2 should be mounted close to the laser diode. The part about 'no overshoot' is very important. If the supply isn't well behaved, it will fry LDs.

Before attempting to obtain lasing action with either of these circuits, monitor the voltage across what you think is the LD as you slowly increase the power supply or potentiometer. If you guessed correctly (or have the pinout diagram from the spec sheet or determined from its former life), the voltage will increase until around 1.5 to 2 V and then climb more slowly. Don't push your luck, unless you are also monitoring the laser-diode current and optical output.

If you are checking voltage across the laser diode or photodiode in the reverse-biased direction, it will continue to climb above 2 volts without slowing. Don't push your luck here either—the breakdown voltage of the LD may be only a little more than this and—you guessed it—exceeding this voltage is not healthy for the LD either.

If you are monitoring the PD in the forward direction, the voltage will get stuck around .7 volts. Once you have identified the correct connections, very carefully monitor the current through the LD as you slowly increase the current and

www.americanradiohistory.com

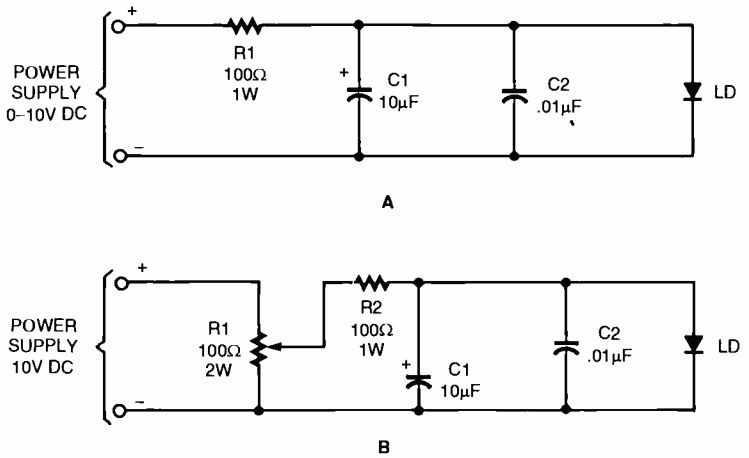

Fig. 2. Using either of these two circuits, you will be able to test your salvaged laser diode. Circuit A is designed for a variable power supply, while Circuit B is designed for a fixed power supply.

check for a laser beam.

For IR laser diodes, you must use an IR-detector circuit, card, video camera or camcorder (with the requisite three hands) to monitor for an actual IR laser beam. For visible laser diodes, you can use your eyes or any more sophisticated detector, as desired. Look from an oblique angle or better yet, place a white card a couple of inches in front of the LD. Even a 1-mW LD is an intense source of light—there will be no doubt when lasing begins.

However, some LDs may have an operating current as low as 20 mA and VCSELs (*V*ertical *C*avity *S*urface-*E*mitting *L*aser diodes) tend to be much lower (but you probably don't have any of those to play with yet!).

Of course, if you inherited a bag of identical LDs and can afford to blow one: (1) Send me a few before you do this,☺ and (2) you probably could fairly accurately characterize them by testing one to destruction.

For a current below the lasing threshold for your LD, there will be some emission due to simple LED action. As you slowly increase the current, at some point (if the LD is good) as you exceed the threshold current, the character of the emission will change dramatically, and a very slight increase in laser-diode current will result in a significant increase in intensity. Congratulations! The LD is lasing.

CAUTION: Unless you have a laser power meter, be careful. The maximum safe current may be as little as 5% above the lasing threshold. Go over by 6%, and your diode may be history. The exponential power curve seems to be steeper with visible LDs, but there is no way to be sure without specifications. It is all too easy to convert laser diodes into extremely useless DELDs (*D*ark-*E*miting *L*aser *D*iodes) or very expensive LEDs.

I have used this approach with LDs from dead CD players without difficulty. In the case of many of these LDs, the operating current is printed on a sticker on the optical block, often as a three-digit number representing the current in tenths of mAs. Typical values are 35 to 60 mA (350 to 600). Sony pickups typically average around 50 mA. Without this information, the best you can do is to estimate when it is lasing at the proper intensity by comparing the brightness of the red dot one sees by looking into the lens from a safe distance at an oblique angle. However, this is not very reliable as the optical power at the objective lens depends on the particular CD player.

Even if you have complete test data for your diode, it's still a good idea to start low and monitor output power. The diode was originally tested under very precise conditions, which probably aren't quite the same as you have (e.g., temperature); so laser-diode or photodiode current that you monitor could be different by enough to cause problems.

Wrapup

Now that you have the basics, go rummaging around in that junk box and dig out all those old CD players and laser printer carcasses. Although not mentioned above, in addition to the actual laser diodes, there will be useful optics and even, possibly, some of the associated driver circuits.

Just make sure to always follow the safety guidelines in working with any laser or laser-based device. Much more information on LDs and all other laser-related topics can be found on my Web site *www.repairfaq.org* in "Sam's Laser FAQ." I welcome feedback (via e-mail please) to sam@repairfaq.org. P

Introducing Robotics with Lego® Mindstorms™

For Robot Lovers. Shows how to build a variety of increasingly sophisticated computer-controlled robots using the brilliant Lego mindstorms Robotic Invention System (RIS). Covers the fundamental building techniques needed to construct strong and efficient robots. Explains to the reader how robot control programs may be simply constructed on their PC screens. Detailed building instructions are provided for all the robots featured. 270 pages, 71/2 x 10 5/7 in. **$19.99.** Plus $2.45 shipping in U.S. Order from CLAGGK Inc., P.O. Box 12162, Hauppauge, NY 11788 **CLX1**

MULTIMEDIA on the PC!

What is Multimedia? What can it do for you? It can do lots of nice things! This 184-page book helps you create your own multimedia presentation. Multimedia applications by people like you can revolutionize educational and business applications as well bring more FUN, FUN, FUN into your leisure computer activities.

Mail coupon to:

Electronics Technology Today, Inc.
P.O. Box 240
Massapequa Park, NY 11762-0240

Please send me my copy of *Multimedia on the PC* (PCP120). I enclose a check or money order for **$18.45** to cover the book's cost and shipping-and-handling expenses. NY state residents must add local sales tax.

Name _____

Address _____

City _____ State _____ ZIP _____

All orders must be paid in U.S. funds only. Sorry, no orders accepted outside of USA and Canada. Please allow 6-8 weeks for delivery.

MA02

www.americanradiohistory.com

BASIC CIRCUITRY

mailto: basiccircuitry@gernsback.com

CHARLES D. RAKES

Diversity

If electronics offers anything to the hobbyist, it's diversity. Almost everything we do today involves electronic circuitry in one form or another. Unlike the devices of the past, most electronic devices used today are more complex and downright unfriendly to change or modification. So we're going to start off our circuit marathon with just such a problem.

Burglar Alarm Woes

A friend has this new modern computer-chip-controlled burglar-alarm system that was designed to sound a low-volume alarm and automatically dial several numbers to alert interested parties of a possible burglary in progress. In theory this might be a good idea; however, for my friend it would only work if the interested party was near his phone, and who could guarantee that!

"Could I add a much louder alarm to the system?" he asked.

"Oh sure, that should be no problem," I quickly responded. Upon looking over this electronic marvel, I knew I had spoken way too fast.

There was no external output to use for any purpose whatever available on the alarm. After reading the alarm's handbook, I immediately realized that I did not want to open the unit or make any direct connections to it. The only output available was the beep, pause, beep output of the alarm when set off. A blinking or glowing LED would have been perfect to couple to with a phototransistor; however, although acoustic coupling was not the best choice, it was the only choice available.

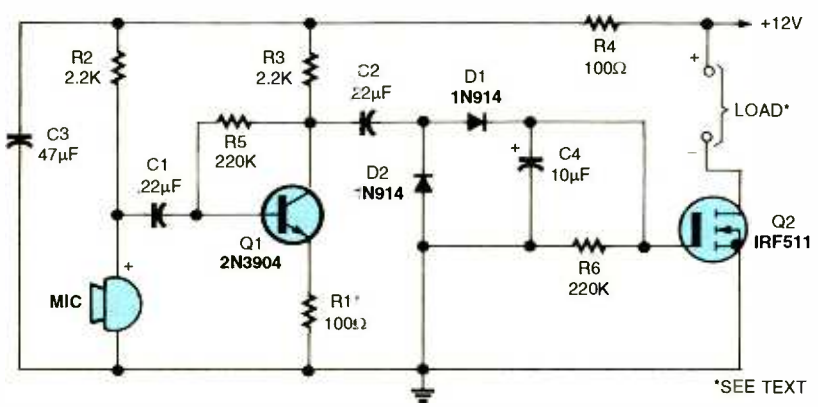

Fig. 1. The single-stage amplifier circuit shown above turned out to be a simple solution for the alarm system as installed. With the added alarm sounder located outside and away from the control unit, feedback to our pickup microphone did not occur.

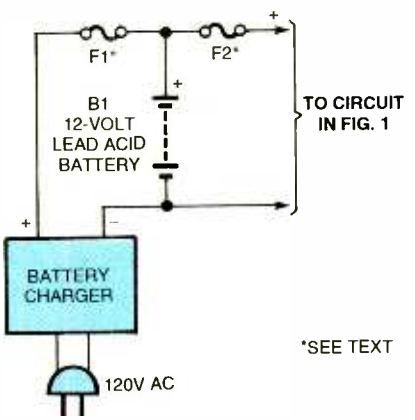

Fig. 2. A separate power source for the circuit in Fig. 1 and the add-on alarm sounder is shown here. A battery tender, also known as a trickle charger, supplies charging current to the 12-volt lead-acid battery.

A Workable Solution

The single-stage amplifier circuit shown in Fig. 1 turned out to be a simple solution for the alarm system as installed. With the added alarm sounder located outside and away from the control unit, feedback to our pickup microphone did not occur. However, if they both were in the same room, feedback would be a real problem.

The microphone is housed, as shown in Fig. 3, in a 1½-inch length of ⅜-inch (ID) × ½-inch (OD) vinyl tubing. The electret-microphone element is about .39-inches in diameter and fits snuggly in the vinyl tubing. The area behind the element is filled with silicon rubber, which is a very good sound insulator. The open end of the tubing is positioned about one inch away from the alarm system's internal piezo sounder. The best

PARTS LIST FOR THE AMPLIFIER CIRCUIT (FIG. 1)

SEMICONDUCTORS
Q1—2N3904 NPN transistor
Q2—IRF511 HEXFET
D1, D2—1N914 silicon diode

RESISTORS
(All resistors are ¼-watt, 5% units.)
R1, R4—100-ohm (see text)
R2, R3—2200-ohm
R5, R6—220,000-ohm

CAPACITORS
C1, C2—.22-μF, ceramic-disc
C3—47-μF, 25-WVDC, electrolytic
C4—10-μF, 25-WVDC, electrolytic

ADDITIONAL PARTS AND MATERIALS
.39-inch diameter, electret-microphone element

www.americanradiohistory.com

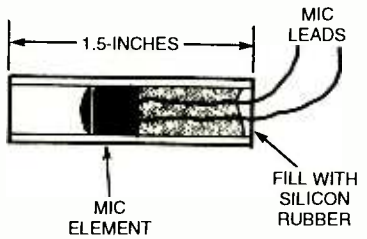

Fig. 3. The microphone is housed, as shown above. 1½-inch length of ⅛-inch (ID) × ½-inch (OD) vinyl tubing. The electret-microphone element is about .39-inches in diameter and fits snuggly in the vinyl tubing.

location for the mike can only be determined by testing and experimenting with the system in operation.

This particular alarm system uses the internal piezo-alarm-sounder elements for other audible function indicators. Arming the alarm sends out a beep from the piezo sounder, which must be ignored by the add-on circuit. Also when the alarm does go off, it produces a beep-pause-beep output, which must be detected by the add-on circuit. The circuit must ignore a single beep, but supply an output when the beeps are repeated. This discrimination between single and recurring beeps is primarily accomplished with the location of the mike and the RC timing of R6 and C4.

Changing the value of R1 is another variable, which sets the amplifier's gain. However, this change should not be required for most applications and, therefore, should only be performed when all other attempts fail. Increasing the value of R1 lowers the amp's gain, and decreasing the value raises the gain. Increasing the amplifier's gain can really increase the difficulty in obtaining a balance between the single and recurring beeps.

OK, now let's see how the circuit discriminates between the two signals. The beeps (and, for that matter, all other sounds) are picked up by the microphone and amplified by Q1. The amplifier's gain is very low, making it insensitive to sounds that are not close to, and directly in front of, the microphone. The amplified signal feeds a voltage doubler, made up of C2, D1, D2, and C4, with R6 setting the discharge time. The doubler's positive output turns on the power HEXFET, which delivers power to the load.

A short burst of sound from the alarm only charges C4 a small amount and not enough to turn Q2 on. Following the single beep, R6 begins to discharge the voltage across C4 back to ground level. A number of beeps in sequence causes the voltage across C4 to increase in steps until Q2 turns on, activating the added alarm sounder. Loud sounds from outside the room, including car horns and even thunder, have no effect on the circuit because of the amplifier's low gain, C4's charging time constant, and the location of the microphone. Also, the circuit is immune to inside room noises, including conversations, radios, and other ambient sounds in a typical household.

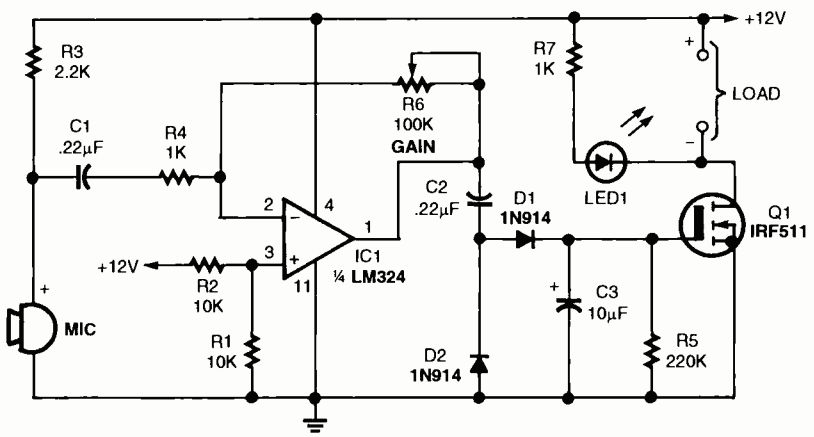

Fig. 4. An op-amp is the amplifying device in this circuit, replacing the transistor in Fig. 1. The slight twist to this circuit is the addition of a gain-control potentiometer, R6. The circuit's voltage gain can be precisely set from unity gain up to a gain of one hundred.

PARTS LIST FOR THE OP-AMP AMPLIFIER (FIG. 4)

SEMICONDUCTORS
IC1—LM324 Quad, op-amp
Q1—IRF511 HEXFET
D1, D2—1N914 silicon diode
LED1—Light-emitting diode, any type or color

RESISTORS
(All resistors are ¼-watt, 5% units.)
R1, R2—10,000-ohm
R3—2200-ohm
R4, R7—1000-ohm
R5—220,000-ohm
R6—100,000-ohm potentiometer

CAPACITORS
C1, C2—.22-µF, ceramic-disc
C3—10-µF, 25-WVDC, electrolytic

ADDITIONAL PARTS AND MATERIALS
.39-inch diameter, electret microphone element; IC socket; etc.

Power For The Add-On Circuit

A separate power source for the circuit in Fig. 1 and the add-on alarm sounder is shown in Fig. 2. A battery tender, also known as a trickle charger, supplies charging current to the 12-volt lead-acid battery.

The battery selected should have the capacity to supply the alarm sounder for at least an hour of operation. I would double the current requirement of the added alarm sounder and use a battery of that current rating. If the alarm sounder pulled 1 amp, then a good choice would be a 2-amp-hour battery.

Fuse F1 protects the battery from a faulty charger, and F2 protects the battery from an overload. The actual fuse values are determined by the battery used and the charger's maximum charging current.

Another Solution

There are many avenues to follow in selecting or designing an electronic circuit to solve a particular problem, and the circuit shown in Fig. 4 is just another solution with a slight twist. An op-amp is the amplifying device, replacing the transistor in Fig. 1. The slight twist to this circuit is the addition of a gain-control potentiometer, R6. The circuit's voltage gain can be precisely set from unity gain up to a gain of one hundred.

In our original circuit, in Fig. 1, a gain control was not included because of the problems it can create if not properly adjusted while setting up the system. This circuit is different in that aspect, because of the ease of making a gain

www.americanradiohistory.com

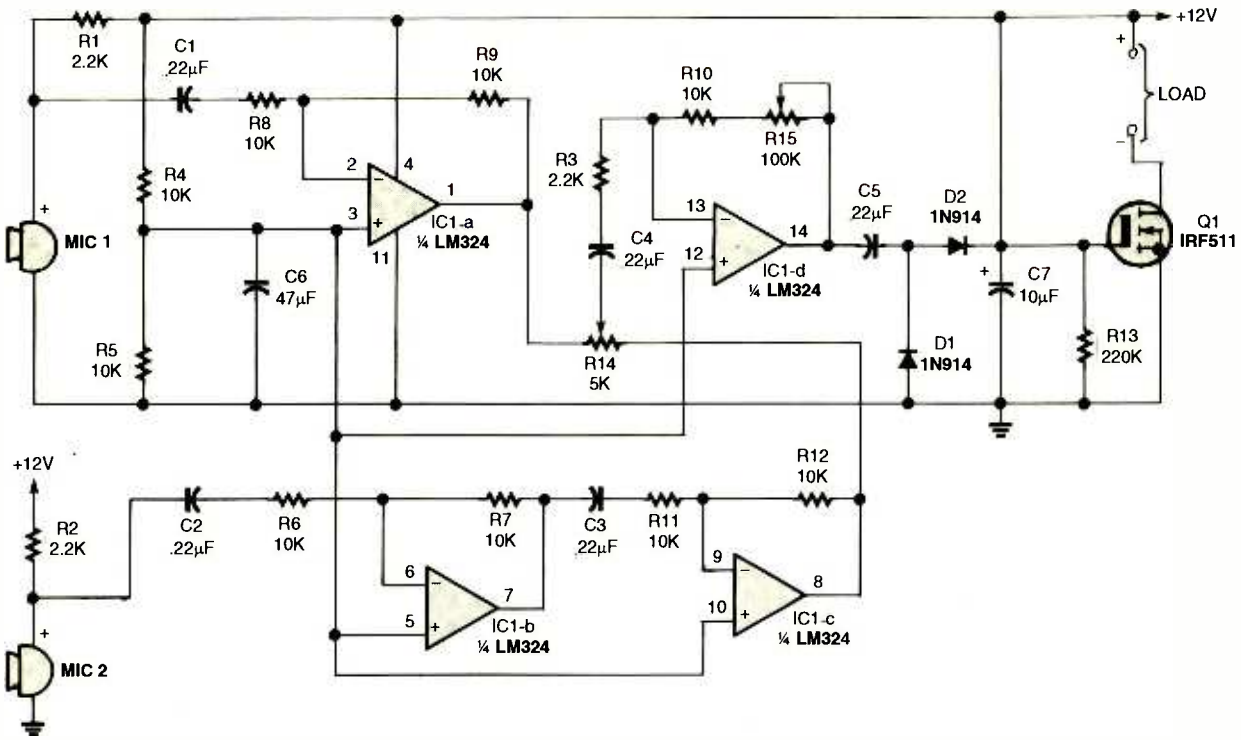

Fig. 5. This circuit's function is to discriminate between the beep-beep alarm on the alarm system and the loud sound coming from the add-on sounder. Under ideal conditions this is not a good thing, and, at best, it only has a 50-50 chance of operating successfully.

PARTS LIST FOR THE SOUNDER TWO (FIG. 5)

SEMICONDUCTORS

IC1—LM324 Quad. op-amp
Q1—IRF511 HEXFET
D1, D2—1N914 silicon diode

RESISTORS

(All resistors are ¼-watt, 5% units.)
R1–R3—2200-ohm
R4–R12—10,000-ohm
R13—220,000-ohm
R14—5000-ohm potentiometer
R15—100,000-ohm potentiometer

CAPACITORS

C1–C5—.22-µF, ceramic-disc
C6—47-µF, 25-WVDC, electrolytic
C7—10-µF, 25-WVDC, electrolytic

ADDITIONAL PARTS AND MATERIALS

Two .39-inch diameter, electret microphone elements; IC socket; etc.

adjustment. The remaining circuit operation is same as in our first circuit.

Setting The Gain

Place the microphone on the alarm unit about one inch from the piezo alarm sounder. Don't aim the mike directly at the sounder, but in a position perpendicular to it. Temporarily tape the mike in place. If the microphone is placed directly facing the sounder, it becomes more difficult to distinguish between a single beep and sequential beeps.

Start with the gain control at its maximum resistance setting. Set the alarm off allowing the beep-beep sounds to continue. Very slowly rotate R6, lowering the resistance, until the LED turns on. Stop and observe that the LED does not flicker on and off. Reset the alarm and test again to see that the LED turns on and remains steady.

Reset the alarm and let a few seconds pass. Arm or press any button that produces a single beep and observe the LED. The LED should not flicker or light with a single beep. Also playing a radio or any other normal room sounds should not cause the LED to light.

Setting The Parameters

One thing we don't want to happen is that the alarm goes off and is not detected by our circuit. Two important gain settings must be determined—the gain setting where the circuit just starts to operate and the gain setting where a single beep causes the LED to flicker. Since the circuit's gain has just been adjusted for the LED to only operate with a sequential beeping sound, we can now determine the maximum gain setting. Each time an adjustment is made, the circuit should be allowed to settle for at least ten seconds before testing. This delay will allow time for the timing capacitor, C3, to discharge.

Increase the gain slightly and test with a single beep. Continue increasing the gain with ten-second pauses between test beeps, and stop when the LED flickers or turns on.

This is the maximum gain setting. The ideal operating gain setting will be between these two potentiometer positions. Start testing with the pot set in the middle of the two settings. Testing and experimenting will yield the best gain setting for trouble-free operation.

The Red Herring

Just as I was wrapping up the add-on alarm sounder, my friend casually stated that he also thought it would be a good idea to add a similar alarm sounder inside the very room where the alarm unit was located. His thoughts were that it would appeal to a hearing-impaired burglar and hopefully help him make the decision to leave at once. I convinced him that we should let the first one burn

www.americanradiohistory.com

in for a while and then take a look at the add-on to the add-on.

Catch Of The Day

Never duck a challenge, I thought, as I traveled home that day. The circuit in Fig. 5 just might be a possible solution to the indoor alarm quandary, and then maybe not. This one I've not had the opportunity to fully check out in my friend's settings; however, preliminary tests are promising. I'm hoping that my friend forgets all about it, and I can move on.

The circuit's function, in Fig. 5, is to discriminate between the beep-beep alarm on the alarm system and the loud sound coming from the add-on sounder. Under ideal conditions this is not a good thing, and, at best, it only has a 50-50 chance of operating successfully. With this one, you are on your own. I'll outline the circuit's operation, and then you have my permission to enjoy the frustrations of balancing the circuit between the two sound sources. Good luck, and no name-calling will be allowed.

Two microphones are used, one to pick up the sound from the alarm's piezo sounder—as in our first two circuits—and the second to detect the sound from the indoor alarm sounder.

The alarm signal from the piezo sounder is picked up by microphone 1 and is fed to op-amp "A" with a gain of one. The alarm signal from the big in-room sounder is picked up with microphone 2 and fed to op-amp "B" with a gain of one and then to op-amp "C" with a gain of one, also. The reason for passing the signal through two op-amps is to invert the signal 180 degrees out of phase with the signal coming out of op-amp "A." In theory, if the signals from the big loud sounder picked up by microphone 1 and by microphone 2 are fed to the input of another op-amp with a 180-degree phase shift, most of the signal of the loud sounder can be cancelled and not amplified. Op-amp "D" and the circuitry following it operate in the same way as our two previous circuits.

The two out-of-phase signals meet at the wiper of potentiometer R14, and the combination of signals is fed to op amp "D." Resistor R14 is adjusted to a point where the output from the loud sounder is at a minimum level, feeding op-amp "D."

Op-amp D's gain is set to a level to activate the add-on alarm when the sequential beep is detected. Getting the correct balance between the two signals and the best gain setting will be a behemoth of a chore. The challenge is yours—the circuit disappears in exactly five seconds.

Good luck! P

DIGITAL DOMAIN

(continued from page 15)

other hand, there's much that isn't online *or* in print. Sometimes, you just have to talk with people or observe things firsthand to really know what's going on.

Speed Writing—The Internet is about speed. People want to get in and out quickly. Neither the Web nor the online discussion group is the best place for long uninterrupted blocks of text.

On the Web, you need to grab readers' attention and make your main points in the first screen. In online discussion groups, however, you need to do the same in the first sentence or two. Otherwise, with a quick click, readers will be off to the next site or message. Don't hesitate to present all the necessary information. Just break it up and let readers know what they're in for. Include the word "long" in parentheses at the end of the subject line of your message or indicate at the top of the body of the message that yours will be a long response.

Sometimes, people writing in online discussion groups forgo traditional print conventions, such as capitalization and paragraphing. This may look hip, but ultimately it just makes reading what you're writing more tedious. It will take readers more time to decipher where one thought ends and another begins.

Often, online writing use conversational acronyms such as IMHO (*in my humble opinion*) and "emoticons" such as :-). The latter is a sideways symbol representing a smiling face, and it signals that you're telling a joke or trying to be friendly. Such conventions work so long as the bulk of your readers understand them. The risk is that newcomers can feel left out.

Presentation—This is primarily an issue for Web sites because typically they're more elaborately designed than text messages. Simpler is almost always better, though, even with Web sites.

The best Web sites don't merely dazzle with flashy animations or the hippest new technology. As with magazines, newspapers, and books, they try to maximize the reader's experience. Don't overdo it by including colored or textured backgrounds that interfere with readability. Similarly, overlarge graphics, dancing buttons, blinking text, and other bells and whistles can draw too much attention to themselves and detract from the reader's overall experience.

Make sure you provide the appropriate navigational aides. Include buttons to the site's major sections at the edge of all or most pages, whether on top, to the left, at the bottom, or to the right. Some sites also include a site map or index that displays all the interior links for those who feel a need to get their bearings. Be sure to include links to interior pages. Finally, with large sites, include an internal search engine so readers can quickly home in on what they're after.

Whether you want to tinker with and improve your PC and its programs or hone your Web communication skills, there are always places to go for further tips. See the sidebar for further information.

Reid Goldsborough is a syndicated columnist and author of the book *Straight Talk About the Information Superhighway*. He can be reached at reidgold@netaxs.com or *www.netaxs.com/~reidgold/column*. P

While speeding treatments and cures for neuromuscular disorders, advances made by MDA researchers also have enhanced therapy prospects for heart disease, cancer, arthritis, Alzheimer's and AIDS.

Giving to MDA makes a world of difference.

MDA®
MUSCULAR DYSTROPHY ASSOCIATION
(800) 572-1717

www.americanradiohistory.com

NEW GEAR

For more information go to page 80A

or e-mail: requests@berkshire-is.com

USE THE FREE INFORMATION CARD FOR FAST RESPONSE

LCR/ESR Meter

With a standard 115 V_{AC} outlet as a power source, the *Model 889 Synthesized Bench In-Circuit LCR/ESR Meter* ($1395) can be used to test inductors, capacitors, and resistors at frequencies up to 100 kHz with a basic accuracy of 0.5%. Ideal for electronic engineering labs, production facilities, service shops, and schools, the meter is designed for both component evaluation on the production line and fundamental impedance testing from bench-top applications.

B&K PRECISION CORP.
22820 Savi Ranch Parkway
Yorba Linda, CA 92887
714-921-9095
www.bkprecision.com

CIRCLE 60 ON FREE INFORMATION CARD

Clamp Meter

Measuring DC current to 600A, the *True RMS AC/DC Clamp Meter, Model 38389* ($99.99) covers a wide range of applications. Other measurements include true RMS AC current, AC/DC voltage, resistance, capacitance, and temperature—the temperature function allows for measurements from -4 to 1400° F. The meter features a 4000-count LCD and a 1¼-inch circular jaw that accommodates large cables. It comes complete with test leads, alligator clips, temperature probe, 9-volt battery, and carrying case.

EXTECH INSTRUMENTS CORP.
285 Bear Hill Rd.
Waltham, MA 02451
781-890-7440
www.extech.com

CIRCLE 62 ON FREE INFORMATION CARD

Adapter Set

Manufactured from hardened, high-tensile strength, alloy steel, this *35-Piece Acu-Min Adapter Set* ($71.25) contains one power driver adapter, one insert bit adapter, and 33 blades. They are made to use with any ¼-inch drive hand or power tool. Included in the set are slotted, Phillips, JIS-type S, Torx, tamper-proof Torx, hex, and nut driver blades—all in various sizes.

MOODY TOOLS, INC.
60 Crompton Ave.
East Greenwich, RI 02818
401-885-0911 or 800-866-5462
www.moodytools.com

CIRCLE 61 ON FREE INFORMATION CARD

Deluxe Tool Set

Packaged in a solid wood box, this *56-Piece Pollicis Series Anti-Static Ergonomic Tool Set* ($273.75) contains 10 extended reach drivers, 18 standard-length drivers, and 1 chuck-type handle with 27 interchangeable blades. The handles feature the Moody Swiveltop—molded into an anti-roll hex shape, it allows for smooth-gliding, stable rotation. Comfortable to use, the design of these drivers eliminates hand fatigue and cramping.

MOODY TOOLS, INC.
60 Crompton Ave.
East Greenwich, RI 02818
401-885-0911 or
800-866-5462
www.moodytools.com

CIRCLE 63 ON FREE INFORMATION CARD

Power Supply

The *DC Power Supply, Model 382280* ($699) supplies high-resolution, programmable outputs to 40V and 5A and two fixed outputs of 5V and 3.3V—all with high stability and low ripple and noise. Features include selectable voltage or current modes, over-voltage/current protection with a programmable 0- to 60-second delay timer, plus a dual-output terminal for source and monitor connections. The memory stores and recalls 120 test setups, and a built-in PC interface permits remote PC control.

EXTECH INSTRUMENTS CORP.
285 Bear Hill Rd.
Waltham, MA 02451
781-890-7440
www.extech.com

CIRCLE 64 ON FREE INFORMATION CARD

www.americanradiohistory.com

Teardrop Ratchets

These all-metal, heavy-duty *Teardrop Ratchets* (¼-inch, $30.98; ⅜-inch, $40.95; and ½-inch, $51.98) are ideal for automotive and industrial applications. Delivering a short, 10-degree stroke for use in tight spaces, the ratchets also feature a high-polish finish for easy cleanup and smooth, contoured handles for increased comfort. Ratchet reversing is accomplished quickly and easily by flipping a small lever on the ratchet's head.

SK HANDTOOL CORP.
9500 West 55th St.
Suite B
McCook, IL 60525
708-485-4574
www.skhandtool.com

CIRCLE 65 ON FREE INFORMATION CARD

Resistance Testers

Performing ground-resistance and soil-resistivity tests, *Models 4620 and 4630 Digital Ground Resistance Testers* (from $1195) are auto-ranging, direct-reading testers that measure from 0 to 2000 ohms. They are designed to reject high levels of noise and interference so they can provide an accurate reading. The large easy-to-read LCD indicates low-battery status, overrange and test-lead shorts, lead reversals, and ground resistance; and the heavy-duty field case is sealed against dust and water when closed.

AEMC INSTRUMENTS
200 Foxborough Blvd.
Foxborough, MA 02035
508-698-2115
www.aemc.com

CIRCLE 67 ON FREE INFORMATION CARD

Intelligent Protometer

Standard with RS-232 computer interface, computer cabling, and software, the *Intelligent Hand-Held Digital Meter, Model Pro-70T* ($69.95) comes complete with a 3999-count, 3¾-digital display and a 40-segment bar graph. The meter performs voltage measuring to 750 volts AC, 1000 volts DC, and current measuring to 10 amps AC and DC. It also has transistor- and capacitor-testing facilities, backlit display, auto/manual ranging, and a temperature-measuring feature.

GLOBAL SPECIALTIES
Highland Industrial Center
1486 Highland Ave., Unit 2
Cheshire, CT 06410
800-572-1028
www.globalspecialties.com

CIRCLE 66 ON FREE INFORMATION CARD

Easy Roller

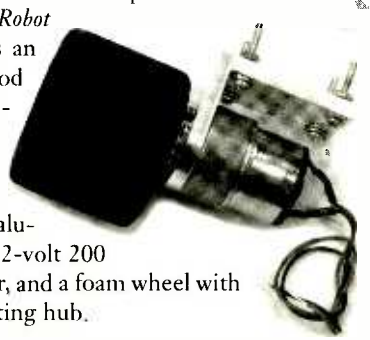

Designed to simplify mechanical mounting requirements for small robotic projects, the *Easy Roller Robot Wheel Kit* ($53) provides an easy-to-implement method of engineering a skid-steering drive system. With all mounting hardware included, the kit provides a ¼-inch solid aluminum motor mount, a 12-volt 200 RPM gearhead DC motor, and a foam wheel with a nylon-aluminum mounting hub.

SOLUTIONS CUBED
256 East First St.
Chico, CA 95928
530-891-8045
www.solutions-cubed.com

CIRCLE 68 ON FREE INFORMATION CARD

Voltage Detector

Quickly and safely check for the presence of AC voltages with the *Non-Contact Voltage Detector Model VT201* ($9.95). Providing non-contact detection of voltages from 70V to 440V AC, the detector has both visible and audible indicators—perfect for those in the home improvement, heating, air conditioning, and electrical industries. Batteries are included.

WAVETEK METERMAN
P.O. Box 9090
Everett, WA 98206-9090
877-596-2680
www.metermantesttools.com

CIRCLE 69 ON FREE INFORMATION CARD

P

www.americanradiohistory.com

NEW LITERATURE

Lighting For Digital Video & Television

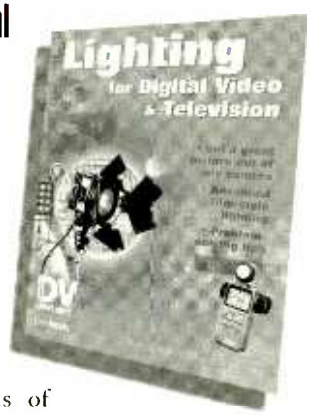

by John Jackman
CMP Books
1700 Fourth St.
Berkeley, CA 94710
800-788-3123
www.cmpbooks.com
$44.95

Get a complete course in television and video lighting—beginning with the fundamentals of how the human eye and the camera process light and color; progressing through the basics of equipment, setups, advanced film-style lighting; and finishing with practical lessons on how to solve common problems. Clear illustrations and real-world examples are provided throughout to demonstrate proper equipment use, safety issues, and staging techniques.

Integrated Circuit Mask Design

by Christopher Saint and Judy Saint
McGraw-Hill
2 Penn Plaza, 12th Floor
New York, NY 10121
800-2MCGRAW
www.books.mcgraw-hill.com
$65

Using everyday language, the authors of this tutorial explain integrated circuit processes, mask design techniques, and fundamental device concepts. Topics include high-frequency/radio-frequency layout techniques, verification tool uses, matching and noise considerations, digital and analog layout, parasitics, floorplanning, and more. Concepts are reinforced through examples, preview points, sidebars, and self-tests.

Newnes Data Communications Pocket Book, Fourth Edition

by Steve Winder and Mike Tooley
Elsevier Science
225 Wildwood Ave.
Woburn, MA 01801
781-904-2500
www.elsevier.com
$24.99

This practical engineer's reference provides essential data, techniques, and formulas for IT professionals, managers, and students working with data communications equipment. The book covers networking, on-line services, fiber optics, data compression, and industry standards. Material is included on USB, Firewire, IP v. 6, ISDN, ADSL/HDSL, PC video standards, and video on demand. The tables, diagrams, and brief explanatory text allow for quick and easy comprehension.

Build Your Own Wireless LAN

by James Trulove
McGraw-Hill
2 Penn Plaza, 12th Floor
New York, NY 10121
800-2MCGRAW
www.books.mcgraw-hill.com
$24.95

Ideal for professionals and non-techies alike, this self-tutoring guide provides a painless way to learn wireless LAN design and development with off-the-shelf products. It includes a complete deployment plan for simple wireless networks, projects built with just a WaveLAN card and ethernet connection. The guide also shows how to tune networks with the latest range-enhancement and interference-minimization techniques.

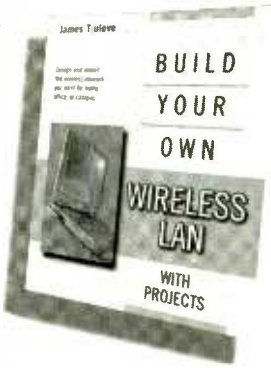

Electronic Parts And Supplies

from All Electronics
905 S. Vermont Ave.
Los Angeles, CA 90006
213-380-8000 or 800-826-5432
www.allelectronics.com
Free

Whether your interest is in robotics, electric trains, surveillance, remote-control models, antique radio restoration, or computers, this catalog probably has something you need. From relays to circuit breakers, speakers to transformers, there are thousands of common and hard-to-find components and products for hobbyists, technicians, inventors, and manufacturers. Items can be ordered via phone, mail, or the Web.

www.americanradiohistory.com

Mac Computer Products

from MacWarehouse
1720 Oak St.
P.O. Box 301
Lakewood, NJ
08701-9885
800-622-6222
www.warehouse.com

Free

Chock-full of networking, connectivity, and communications products, this catalog specializes in Macintosh components, accessories, and equipment. Each item is accompanied with a detailed description and clear color photo—among the products are handheld PDAs, printers, monitors, modems, software, hardware, storage devices, digital cameras, and much more.

Debugging: The Nine Indispensable Rules For Finding Even The Most Elusive Software And Hardware Problems

by David J. Agans
Amacom
1601 Broadway
New York, NY 10019
212-903-8315
www.amacombooks.org

$21.95

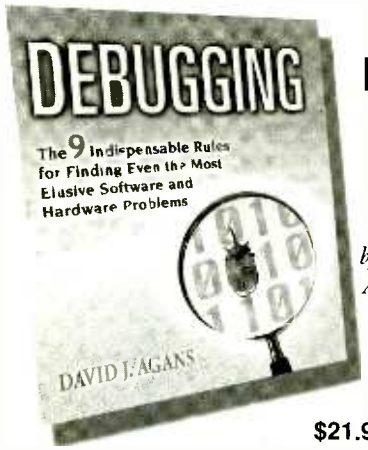

Providing nine simple, foolproof principles guaranteed to help find any bug quickly, this book illustrates these rules with real-life debugging war stories. Readers can learn hands-on investigation techniques, troubleshooting procedures, and universal solutions to general problems. Hopefully, both computer users and professionals will save hours of valuable time previously spent tracking the source of computer problems.

802.11 Demystified

by James LaRocca and Ruth LaRocca
McGraw-Hill
2 Penn Plaza, 12th Floor
New York, NY 10121
800-2MCGRAW
www.books.mcgraw-hill.com

$39.95

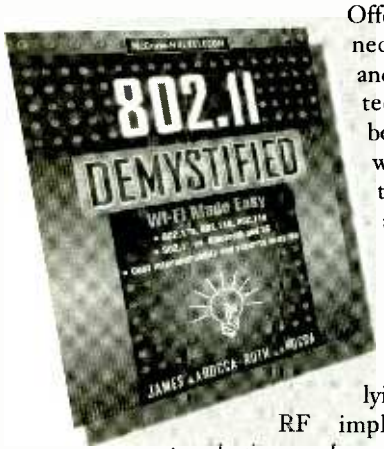

Offering technical information necessary for understanding and examining wireless LAN technology standards, this book is indispensable for network planners, IT executives, technology product managers, application designers, and technical sales and marketing representatives. The text covers the strengths and weaknesses of 802.11; and addresses its underlying technology including RF implementations, network topologies, and mobility management, as well as data security.

Electrical Standards And Product Guide 2002

from NEMA
1300 North 17th St.
Suite 1847
Rosslyn, VA 22209
703-841-3200
www.nema.com

Free

Representing electro-industry manufacturers, this guide from the National Electrical Manufacturer's Association (NEMA) presents national as well as global standards from NEMA and ANSI. It notes the latest version and a short description of the document, and the price, as well as companion standards and notices of approval or adoption by other organizations.

Automotive Catalog

from JC Whitney
1 JC Whitney Way
P.O. Box 3000
LaSalle, IL 61301-0300
800-529-4486
www.jcwhitney.com

Free

This "everything automotive" catalog boasts thousands of parts and accessories for almost any vehicle, including trucks, vans, SUVs, cars, motorcycles, and RVs. Products include mirrors, seats, lights, sound equipment, hard and soft tops, floor mats, carpeting, running boards, wheels, and much more. Many of the customer service reps are auto experts and are available to answer questions and offer guidance.

www.americanradiohistory.com

SUPPLEMENT TO POPTRONICS NOVEMBER 2002

Poptronics®

SHOPPER®

800-308-4626 Check Our Website for our NEW LOCATION & NEW PRODUCTS **800-308-4626**

WIRELESS VIDEO LIPSTICK CAMERAS MONITORS **OVER 800 PRODUCTS IN STOCK!!** DIGITAL RECORDERS ANTENNAS MICRO CAMERAS

DIGITAL MONITORING & RECORDING SYSTEM

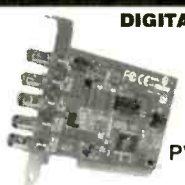

✓TCP/IP
✓MODEM
✓LAN/WAN

PV-140A/B/C/D - $299.95

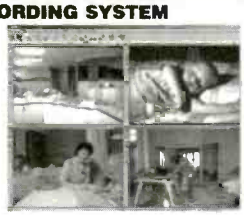

The **PV-140 Series** turns your PC into a commercial grade digital security system in a few minutes. This incredible series integrates a color quad processor, **multi-zone video motion detector**, multiplexer, and a **real time digital video recorder** (DVR). By ordering addition cards, you can increase your surveillance up to 16 different cameras.

SOFTWARE INCLUDED!!!

System Requirements:
- Windows 98/ME/2000/XP
- Pentium III-550Mhz or higher with free PCI slot(s)
- 128 MB+ System Memory
- PCI/AGP bus graphics card (24 bit hi-color or 64 bit)
- Sound Card (optional)
- Hard Disk Space - 1 GB+ per camera; 10GB+ is recommended
- Microsoft DirectX or higher version
- CD-ROM / DVD-ROM device
- Cameras up to 1/2/4/8/12/16

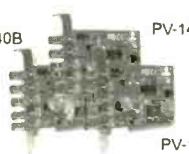

PV140 Card Configuration:
- **140A** 1st four cameras/windows
- **140B** 2nd four cameras/windows (expands to = 8 windows)
- **140C** 3rd four cameras/windows (expands to = 12 windows)
- **140D** 4th four cameras/windows (expands to = 16 windows)

Cards MUST be utilized in this order

SAVE $100 16 Cameras
PV-140 PACK
4 Pieces/One Pack
$1099.95

MICRO BOARD CASED CAMERAS

Introductory Offer MC-780U $69.95

Introducing Polaris Industries Newest Miniature Cameras!

Each camera is compact and lightweight making it perfect for covert applications where little space is available. The **MC-780U B/W Camera** offers 420 TVL ot 0.5 Lux and the **MC-790U Color Camera** provides 380 TVL (480 Enhanced) at 1.0 Lux.

Introductory Offer MC-790U $109.95

B/W PEN CAMERA WITH AUDIO

PENCAM is the newest member to our line of covert cameras. Its small, lightweight design allows this camera to slip into your shirt or coat pocket. It has audio and video capability making the PENCAM perfect for a number of applications.

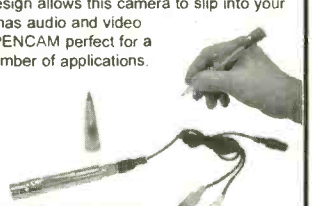

Great Resolution!

PENCAM - $225.95

NIGHT VISION W/AUDIO

3 MODELS AVAILABLE

26-0300 Night Vision Audio Monocular features a built-in Infrared Illuminator for viewing in complete darkness.

26-0300 $349.95

5" WIRELESS OBSERVATION SYSTEM

Now you can enjoy peace of mind with our new wireless observation system. Each comes with a 5" wireless monitor & wireless camera. Just plug & play for perfect wireless video any time!

2.4GHz

Great for around the house, office or technical field work.

GW-2400SA $379.95

CAR REAR-VIEW VIDEO SYSTEM

The RVK-01 adds visual safety to your car, truck and recreational vehicle. Each units includes:
- Rear-view Mirror with Built-in TFT Display
- Weatherproof, Wide-Angle Infrared Camera
- Mounting Hardware & Accessories

Snaps On To Your Vehicles Existing Rear View Mirror

Camera Included!

RVK-01 $449.95

220x ZOOM CAMERA MODULE

Build your own speed dome or motor zoom camera with ease. The Polaris 220X camera module will fit right into your case easily. The life of the 220X motor is essentially 5 times longer than any other brand named camera available today.

AFZ-220X is compact and lightweight. This zoom camera will fit into a variety of applications.

AFZ-220X $349.95

CASED VERSION AVAILABLE

1/3" HIGH RESOLUTION DSP COLOR CAMERA

DX-7811S Our **NEW Digital Signal Processing (DSP) Camera** offers you a Day/Night Camera with Digital Zoom, Mirror Function, 470 lines of resolution, backlight compensation, gain control & low lux. An excellent addition to your current security system or a great beginning to a new system.

This camera has all the features of the brand names without the brand name price!

DX-7811S $169.96

Polaris Industries, Inc.
We're On The Move!

Techical Sales 404-872-0722
Tech Support 404-872-0722/16
Fax 404-872-1038

WWW.POLARISUSA.COM

CIRCLE 228 ON FREE INFORMATION CARD

www.americanradiohistory.com

NORTH COUNTRY RADIO

A supplier of top quality kits since 1986

AM,FM,TV, Carrier Current and Infrared Transmitters
Downconverters, Upconverters,Converters and receivers
Video devices, E-H and RF Field Strength Meters
Speech Scrambler, Voice Messenger, Ultrasensitive DC Meter
LED Thermometer, and many more useful and practical kits

Visit our Website www.northcountryradio.com

for detailed product specs, photos,schematics, block diagrams, technical articles, and ordering information

Sales: PO Box 53 Wykagyl Station, New Rochelle NY 10804-0053 Tel 914-235-6611
Technical : PO Box 200, Hartford NY 12838-0200 Tel 518-854-9280

EZ-EP DEVICE PROGRAMMER - $169.95

Check Web!! -- www.m2l.com

Fast - Programs 27C010 in 23 seconds
Portable - Connects to PC Parallel Port
Versatile - Programs 2716-080 plus EE and Flash (28F,29C) to 32 pins
Inexpensive - Best for less than $200

- Correct implementation of manufacturer algorithms for fast, reliable programming.
- Easy to use menu based software has binary editor, read, verify, copy, etc. Free updates via bbs or web page.
- Full over current detection on all device power supplies protects against bad chips and reverse insertion.
- Broad support for additional devices using adapters listed below.

Available Adapters

EP-PIC (16C5x,61,62x,71,84)	$49.95
EP-PIC64 (62-5,72-4)	$39.95
EP-PIC12 (12C50x)	$39.95
EP-PIC17 (17C4x)	$49.95
EP-51(8751 C51)	$39.95
EP-11E (68HC11 E/A)	$59.95
EP-11D (68HC711D3)	$39.95
EP-16 (16bit 40pin EPROMS)	$49.95
EP-Z8(Z86E02,3,4,6,7,8)	$39.95
EP-SEE2 (93x,24x,25x,85x)	$39.95
EP-750 (87C750,1,2)	$59.95
EP-PEEL (tCT22v10,18v8)	$59.95
EP-1051(89C1051,2051)	$39.95
EP-PLCC (PLCC EPROMs)	$49.95
EP-SOIC (SOIC EPROMs)	$49.95

Many Other Adapters Available

M²L Electronics
970/259-0555 Fax: 970/259-0777
250 CR 218 Durango, CO 81301
CO orders add 7% sales tax
http://www.m2l.com

Lynxmotion, When you're tired of playing with toys!

Lynxmotion, Inc.
PO Box 818
Pekin, IL 61555-0818
www.lynxmotion.com

Visit our website or ask for our free catalog!

Tel: 309-382-1816
Fax: 309-382-1254
sales@lynxmotion.com
tech@lynxmotion.com

MECI
340 East First Street
Dayton, Ohio 45402
Your Electronics Value Company

Tons of Electronics

Get your FREE catalog today and discover some of the best deals in electronics. We have thousands of items ranging from unique hard-to-find parts to standard production components. Call, write or fax today to start your subscription to one of the most unique catalogs in the industry, filled with super values on surplus electronic and hobbyist type items.

Checkout our 10,000 item on-line catalog http://www.meci.com

Order Toll Free 1-800-344-4465
Why pay more? Call today!
Fax Order Line 1-800-344-6324

CIRCLE 323 ON FREE INFORMATION CARD

www.americanradiohistory.com

Be an FCC LICENSED ELECTRONIC TECHNICIAN

EARN MORE MONEY

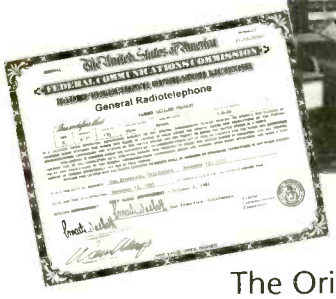

Earn up to $100 an hour and more!

The Original Home-Study course prepares you for the "FCC Commercial Radiotelephone License" at home in your spare time. This valuable license is your professional "ticket" to thousands of exciting jobs in:

- Communications
- Microwave
- Radar
- Radio-TV
- Maritime
- Avionics & more

You can even start your own business!

No previous experience needed! No need to quit your job or go to school. This proven course is easy, fast and low cost!

GUARANTEED TO PASS – **You get your FCC License or your money refunded.**

Send for FREE facts now!

Mail coupon today or call

(800) 932-4268 Ext. 240

www.LicenseTraining.com

COMMAND PRODUCTIONS
FCC LICENSE TRAINING - DEPT. 240
P.O. Box 2824 • San Francisco, CA 94126
Please rush FREE details immediately!

Name _____

Address _____

City _____ State _____ Zip _____

CIRCLE 321 ON FREE INFORMATION CARD

Your own circuit boards from design through order are as easy as PCB123

- Download the FREE software.
- Design the circuit board you want.
- Get real-time pricing as you design.

We'll produce your small quantity circuit board order at an unbelievably low price, and we'll have it back to you in no time.

- Easy
- Fast
- Inexpensive

PCB123™

Visit us online today at www.pcb123.com—we make doing what you want as easy as 1,2,3.

Providing the complete circuit board solution, design through order.

CONTROL
RELAYS • LIGHTS • MOTORS
MEASURE
TEMPERATURE • PRESSURE • LIGHT LEVELS • HUMIDITY
INPUT
SWITCH POSITIONS • THERMOSTATS • LIQUID LEVELS

MODEL 30 . . . . . $79
- PLUGS INTO PC BUS
- 24 LINES DIGITAL I/O
- 8 CHANNEL-8 BIT A/D/ IN
- 12 BIT COUNTER
- UP TO 14K SMP/SEC

MODEL 45 . . . . . $189
- RS-232 INTERFACE
- 8 DIGITAL I/O
- 8 ANALOG INPUTS
- 2 ANALOG OUTPUTS
- 2 COUNTERS-24 BIT

MODEL 100 . . . . . $279
- 12 BIT 100 KHZ A/D
- 4 ANALOG OUTPUTS
- 3 TIMER COUNTERS
- 24 DIGITAL I/O

MODEL 150-02 . . . . $179
- RS-232 INTERFACE
- TRMS, 20 AMPS
- 12 BIT A/D
- OPTO-ISOLATED
- COMPLETE DMM

MODEL 40 . . . . . $109
- RS-232 INTERFACE
- 28 LINES DIGITAL I/O
- 8 ANALOG INPUTS
- PWM OUTPUT

MODEL 70 . . . . . $239
- RS-232 INTERFACE
- 28 BIT A/D
- 8.5 DIGIT
- UP TO 60 SMP/SEC

Prairie Digital, Inc.
PHONE 608-643-8599 • FAX 608-643-6754
920 SEVENTEENTH STREET • PRAIRIE DU SAC, WISCONSIN 53578

CIRCLE 219 ON FREE INFORMATION CARD

www.americanradiohistory.com

SEARCH & BUY ONLINE
www.mouser.com

166,000+ ELECTRONIC COMPONENTS

MOUSER ELECTRONICS

CIRCLE 325 ON FREE INFORMATION CARD

2539 W. 237th St. Bldg. F, Torrance, CA 90505
Order desk only: USA (800) 872-8878 CA (800) 223-9977
LA & Technical Info: (310) 784-5488
Fax: (310) 784-7590

TIMELINE INC.

Over 16 years and 33,000 customers and still growing

email : mraa@earthlinknet • http://www.digisys.net/timeline

Minimum Order $20.00. Minimum shipping and handling charge $5.00. We accept cashier's checks, MC or VISA. No personal checks or COD's. CA residents add 8.25% sales tax. We are not responsible for typographical errors. All merchandise subject to prior sale. Phone orders welcome. Foreign orders require special handling. Prices subject to change without notice. 20% restocking fee for returned orders.

LIQUID CRYSTAL DISPLAYS

240x64 dot LCD with built-in controller
AND 4021ST-EO. Unit is EL back-lit. $29.00 or 2 for $49.00 or
OPTREX. DMF5005 (non back-lit) $29.00 or 2 for $49.00
20 character x 8 line 7'/8L x 2½H
The built-in controller allows you to do text and graphics

240x128 LCD with built-in controller $29.00 2 for 49.00
256x128 LCD with built-in controller $29.00 2 for 49.00

Alphanumeric-parallel interface

16x1	$5.00	20x2	$6.00	32x2	$5.00
16x1 (lg. char.)	$7.00	20x4	$8.00	40x1	$5.00
16x2	$5.00	20x4 (lg. char.)	$10.00	40x2	$7.00
16x2 (lg. char)	$10.00	24x2	$6.00	40x4	$15.00
16x4	$8.00	32x4	$5.00	4x2	$4.00

5Vpower required • Built-in C-MOS LCD driver & controller
• Easy "microprocessor" interface • 98 ASCII character generator
Certain models are backlit, call for more info

Graphics and alphanumeric – serial interface

size	Mfr.	price	size	Mfr.	price
640x480 (backlit)	Epson	$15.00	320x240	Epson	$15.00
640x400 (backlit)	Panasonic	$10.00	256x128	Epson	$15.00
640x200	Toshiba	$10.00	240x128 (backlit)	Optrex	$15.00
480x128 (backlit)	ALPS	$ 8.00	240x64	Epson	$15.00
480x128	Hitachi	$ 6.00	160x128	Optrex	$15.00

6" VGA LCD 640x480,
Sanyo LMDK55-22 $15.00

MONITORS

NON-ENCLOSED TTL
Comes with pinout. 12v of 1.4 input • Horizontal frequency 15Khz
• Ability to do 40 and 80 column
5 INCH AMBER $15.00 • 7 INCH AMBER $19.00
9 INCH AMBER OR GREEN $19.00

5" COLOR MONITOR $19.00 2 for $29.00

- Flat Faceplate • 320 x 200 Dot Resolution
- CGA & Hercules Compatible • 12 VDC Operation
- 15.75 KHz Horiz. Freq. • 60 Hz Vert. Sync. Freq.
- Open Frame Construction
- Standard Interface Connector
- Degaussing Coil included • Mfr. Samtron

HACKER CORNER

57 WATT UPS SUPPLY $19.00
(COMES w/ 12V @ 2.2AMP BATTERY)

Unit designed to provide uninterrupted DC power in the event of loss of the primary 110 / 220 VAC supply. It utilized a 12 V sealed lead acid battery as a source of power until the AC supply can be restored. It is a versatile unit which can be used in a number of different applications. The outputs are +5 VDC @ 6.5A, + 3.6 VDC @ 2.5A, + 12 VDC @ 8A, -12 VDC @ 5A, and a battery charging output of 12 VDC @ 10A. The DC outputs are terminated in the in-line connectors, which interface with standard motherboard and drive connectors. Possible applications include: Robotics, scientific sensing and recording, Linux devices attached to Ethernet or Internet links, etc.
• The unit is small enough (2" x 3.5" x 8.5") to be contained in a standard PC enclosure, in place of the regular power supply – interfacing directly with the motherboard – providing an uninterruptible power supply. • It can function as a DC – DC power supply finishing multiple outputs using a 12 VDC input.
• The 10 Amp. 2 VDC output can be used as a battery charger with any AC input from 100-240 V. • The unit is a versatile 57 watt DC power supply providing +5 and 3.6 VDC as well as +/- 12 VDC.

EMBEDDED 486 COMPUTER $59.
2 FOR $109.00

Complete enhanced Intel 486SX-33 based computer in ultra small (9-7/8L x 6-5/8W x 3-1/8H) case. Ideal for embedded operations or as a second computer. Features include: • 3 serial ports plus dedicated printer port • Parallel optical coupled adapter port • Built in IBM PC/AT keyboard port • On board VGA video and port
• Uses standard SIMM up to 32 MB • BIOS is PC/AT compatible

Unit has a backup Ni-Cd battery system in case of power failure (5 min backup time) and lockable front cover to prevent floppy drive access. Mounting/interface provisions for standard 3.5" laptop floppy and 2.5 inch hard drives. Comes with very comprehensive manual. Ultra small (9-7/8L x 6-5/8W x 3-1/8H) case.

CELL SITE TRANSCEIVER $19.00 2 FOR $29.00

These transceivers were designed for operations in an AMPS (Advanced Mobile Phone Service) cell site. The 20 MHz bandwidth of the transceiver allows it to operate on all 666 channels allocated. The transmit channels are 870.030-889.980 MHz with the receive channels 45MHz below those frequencies. A digital synthesizer is utilized to generate the selected frequency. Each unit contains two independent receivers to demodulate voice and data with a Receive Signal Strength Indicator (RSSI) circuit to select the one with the best signal strength. The transmitter provides a 1.5 watt modulated signal to drive an external power amplifier. Channel selection is accomplished with a 10-bit binary input via a connector on the back panel. Other interface requirements for operation are 26 VDC (unregulated) and an 18.990 MHz reference frequency for the digital synthesizer. The units contain independent boards for receivers, exciter, synthesizer, tunable front end and interface assembly (which includes power supplies and voltage-controlled oscillator) Schematics and circuit descriptions included.

ALL ELECTRONICS CORPORATION

SHOP OUR ONLINE STORE
www.allelectronics.com

30 Watt Stereo Amplifier

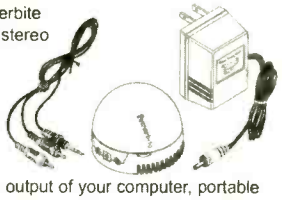

The Powerbite personal stereo amplifier provides 30 Watts (15 x 2) of audio power to boost the output of your computer, portable CD player, portable TV or video game. Provides a clean, full sound that can be played through bookshelf or larger speakers. This ergonomically designed desktop amplifier has a trackball-like volume control, tone control and LED power indicators. Includes hook-up cable (3.5 stereo to RCA plugs) and power supply. Attractive retail packaging. Speakers not included.
CAT # AMP-30 $19.00 each
12 for $15.00 each

20 X 1 Large Character LCD

Samsung # UC-20102-GNAR5
Large 5 x 7 dot characters, 0.46" H x 0.26" W. Blue characters on gray background. 6.1" x 0.64" viewing area. 7.38" x 1.32" module size. Includes hook-up sheet.
CAT # LCD-76 $6.50 each

25 WATT POWER SUPPLY

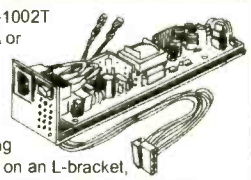

Autec # UPS25-1002T
Input: 115v/1.5A or 230V/0.75A
Output:
5V @ 1.9A,
12V @ 1.6A.
25 Watt switching supply mounted on an L-bracket, 9" x 2.27" x 2.25" overall. Standard three prong IEC socket power input. On-Off rocker switch. Molex-type connector output. UL, CSA recognized.
CAT# PS-251
$4.25 each
10 for $3.50 each

ORDER TOLL FREE
1-800-826-5432
CHARGE ORDERS to Visa, Mastercard, American Express or Discover

TERMS: NO MINIMUM ORDER. Shipping and handling for the 48 continental U.S.A. $6.00 per order. All others including AK, HI, PR or Canada must pay full shipping. All orders delivered in CALIFORNIA must include local state sales tax. Quantities Limited. NO COD. Prices subject to change without notice.

CALL, WRITE FAX or E-MAIL for our FREE 96 Page CATALOG
Outside the U.S.A. send $3.00 postage.

MAIL ORDERS TO:
ALL ELECTRONICS CORPORATION
P.O. Box 567
Van Nuys, CA 91408
FAX (818)781-2653
e-mail allcorp@allcorp.com

Please give blood.
There's a life to be saved right now.
Call 1-800 GIVE LIFE

Ad Council

American Red Cross

SINGERS! REMOVE VOCALS
Unlimited Free Backgrounds from Original Standard Recordings!
Thompson Vocal Eliminator™
VE-4 Free Brochure/Demo
24 Hour Demo/Info Line
(770)482-2485 - Ext 49
LT Sound Dept PE-1 7980 LT Parkway, Lithonia, GA 30058
Internet www.LTSound.com
Better Than Karaoke For Over 25 Years!

Do You Repair Electronics?
Repair Databases for TV, VCR, Monitor, UL Audio, FCC, and more.
- Over 76,000 records
- Private user forums
- Live on-line chat rooms
RepairWorld.com
Electronix Corp | Herald Sq. Fairborn, OH 45324 (937) 878-9878

www.americanradiohistory.com

Turn your PC into a 16-bit Storage Scope spectrum analyzer, and digital multimeter!

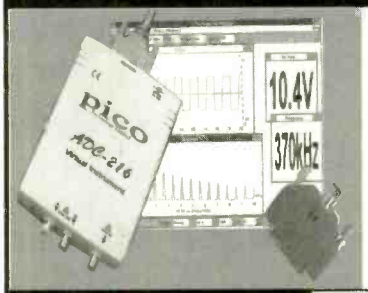

Turn your PC or laptop into a sophisticated storage scope & spectrum analyzer & multimeter. Display on large screen! Print in color! 100MS/s 8-bit, 1.2MS/s 12-bit or 333kS/s 16-bit versions. Great for test depts, schools. Input to Excel. LabView/NT drivers. High precision not high cost! Models from $95 - $799!

DrDAQ
science lab in a box!

great for science fairs!

DrDAQ is a sophisticated digital data-logger that plugs into a PC and comes with sensors for light, sound, pH and temp. Lots of suggested science experiments included which can be done from software supplied. Spectrum analyzer/scope/meter all at once! DrDAQ from only **$99!**

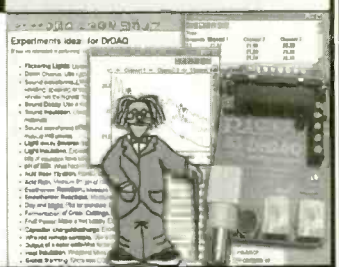

www.saelig.com

RS232-422/485 converters, self-powered, opto-isolated
I2C adapter boards for PC communication with I2C bus
Mini dataloggers for events, voltages, pressures, etc.
Enviromon temperature and environment netwk logger
Thermocouple and **thermistor** adapters for PC ports.
BASIC-programmable **BASIC-TIGER** controller modules
JANZ CANbus boards - from Germany's leader!
SMD adaptor boards for prototyping with any SM parts!

Saelig Company
www.saelig.com saelig@aol.com
585-425-3753 • 585-425-3835 (fax)

1-888-7SAELIG

1280x960 Digital Camera

High-Resolution Camera for Under $70

Capture 24-bit true color images at resolutions up to 1280 x 960 with this lightweight point-and-click camera. The 4MB removable SmartMedia Flash memory stores up to 30 images. Includes built-in flash with red-eye reduction, 10-sec. self-timer and auto-shutoff. Create professional-looking artwork with the MGI PhotoSuite software bundle.

Software included!

$64.99

JDR part #: PT-IMAGE500

Computer Microscope

Capture Still Images or Motion Video

Email images to your friends!

Turn everyday objects into a fun learning experience! Connect to your PC via the USB interface and view specimens at 10X, 60X and 200X magnification. Capture single images, make movies and perform time-lapse photography. Save captured images as JPEG, BMP or AVI files. Add morphing and audio special effects with the bundled software.

$68.99

JDR part #: PT-MSCOPE

Upgrade to USB 2.0

$21.99 HIGH SPEED!

40X Faster Than USB 1.1!

This PCI card has two external USB 2.0 ports for connecting your portable digital devices. Hot-Plug/Hot Swap technology allows you to attach PC peripherals with ease. USB 2.0 delivers a massive 480Mbps transfer rate. Backwards compatibility with USB 1.1 allows you to use existing cables.

JDR part # PT-MCTUSB2

Universal Flash Card Reader

USB Interface for Easy Connectivity

5-IN-1 DRIVE!

This USB 5-in-1 Flash card reader/writer dramatically increases the file transfer speed of digital data to your desktop or notebook PC. Conveniently download data directly from SmartMedia, CompactFlash, MultiMedia, MicroDisk and Secure Digital media. Also writes data, such as downloaded MP3 files, onto Flash cards to play in a portable MP3 player.

$39.99

JDR part # PT-CRMULTIU

Hard Drive Bargains

IDE Drives from Major Manufacturers!

Now is the time to increase your PC's storage capacity while the prices are low. These reliable IDE drives feature Ultra DMA/100 transfer rates and 5,400 RPM spindle speeds. Order today!

GREAT DEALS!

FROM **$64.99**

JDR part #: PT-HDD10 ..... $64.99
JDR part #: PT-HDD20 ..... $69.99
JDR part #: PT-HDD40 ..... $74.99
JDR part #: PT-HDD60 ..... $89.99

30-Day Money-Back Guarantee | 2-Year JDR Warranty | Since 1979

JDR COMPUTER PRODUCTS

Call today for your FREE Catalog!
800-538-5000
www.jdrmicro.com

(c) 2002 JDR Computer Products. JDR Computer Products and the JDR logo are trademarks of JDR Microdevices, Inc. Prices do not include shipping charges or sales tax. Please call or visit our website to confirm charges. Prices are subject to change without notice and merchandise is subject to prior sale. Items pictures may only be representative. A complete copy of our terms and conditions of sale is available upon request.

PIC® Microcontroller Books

New Titles
Same Useful Books

UPDATED

Table of Contents And Ordering Information On Web Site
Not Distributed Via Book Sellers

We accept VISA, MC, AM, DS, MO, Check
CA residents please add 7.25% CA sales tax
See our web sites for s/h rates.

PIC, PICmicro and MPLAB are trademarks of Microchip Technology Inc.

Easy Microcontrol'n - Beginner $29.95
- Programming Techniques
  Instruction set, addressing modes, bit manipulation, subroutines, loops, lookup tables, interrupts
- Using a text editor, using an assembler, using MPLAB
- Timing and counting (timer 0), interfacing, I/O conversion

Microcontrol'n Apps - Intermediate $44.95
- Serial communication - PICmicro to peripheral chips
- Serial EEPROMS
- LCD interface and scanning keypads
- D/A and A/D conversion - several methods
- Math routines
- 8-pin PICmicros
- Talking to a PICmicro with a PC using a terminal program
- Test equipment and data logger experiments

Time'n and Count'n - Intermediate $34.95
- 16-bit timing and counting apps.
- Timer 1, timer 2 and the capture/compare/PWM (CCP) module

Serial Communications - Advanced $49.95
- Synchronous - bit-bang, on-chip UART, RS-232
- Asynchronous - I2C (Philips Semiconductors) SPI (Motorola), Microwire (National Semiconductor)
- Dallas Semiconductor 1-Wire bus

Easy Debug'n - Intermediate $12.95
- Features of PIC16F87x microcontrollers
- In-circuit debugging using Microchip ICD
- Companion for our PIC® microcontroller book series

SQUARE 1 ELECTRONICS
P.O. Box 501, Kelseyville, CA 95451
Voice (707) 279-8881 Fax (707) 279-8883

We have been selling on the Internet since 1996. We ship the day we receive your order or the next business day.

http://www.sq-1.com

www.americanradiohistory.com

New and Pre-Owned Test Equipment

New Equipment Specials

B+K Precision 2120B – 30 MHz Oscilloscope

* FREE Model 117B Multimeter
* 2 Channel, Dual-Trace
* 30 MHz Bandwidth
* TV Triggering
* (2) Probes Included

Sale Price $339.00

AVCOM PSA-37D – Spectrum Analyzer

Satellite Downlink – Installation – Maintenance & Service

- Band 1: 10 – 1750 MHz
- Band 2: 3.7 – 4.2 GHz
- Carrying Case Included
- Line or Battery Powered
- Built-in DC Block & Power for LNA/LNB's

Sale Price $2,395.00

Instek GOS-6103 – 100 MHz Analog Oscilloscope

- 100 MHz Bandwidth
- 2 Channel, High Sensitivity
- TV Trigger - Signal Output
- Cursor Readout
- Time Base Auto-range
- (2) Probes Included
- 2 Year Warranty

Sale Price $899.00

Leader LF 941 – CATV Signal Level Meter

- TV/CATV Coverage from 46-870 MHz
- Video/Audio Carrier Measurements

Sale Price $489.00

Wavetek Meterman HD160B Digital Multimeter

- Full Sealing Against Water, Chemicals, & Fluids
- True RMS
- Drop-Proof to 10 feet (3.3m)

Sale Price $159.00

Pre-Owned Oscilloscope Specials

Tektronix	465	100 MHz	$499.00
Tektronix	465B	100 MHz	$649.00
Tektronix	475	200 MHz	$749.00
Tektronix	475A	250 MHz	$949.00

- **Professionally Refurbished**
- **Aligned & Calibrated to Original Specifications**
- **The Industry Standard of Oscilloscopes**
- ***1 Year Warranty* - The Longest Available!!!**
- **See Website for Complete Specifications**

See us on the Web!
www.testequipmentdepot.com

We Buy Surplus Test Equipment

Test Equipment Depot
A FOTRONIC CORPORATION COMPANY
99 Washington St. Melrose, MA 02176
(781) 665-1400 • FAX (781) 665-0780
e-mail: sales@testequipmentdepot.com

VISA MasterCard AMEX C.O.D.

TOLL FREE 1-800-99-METER
(1-800-996-3837)

CIRCLE 322 ON FREE INFORMATION CARD

Microprocessor Hands-On Training

The PRIMER Trainer is a flexible instructional tool featured in Prentice Hall textbooks and used by colleges and universities around the world. Ruggedly designed to resist wear, the PRIMER supports several different programming languages including Assembler, Machine Language, C, BASIC, and FORTH. A comprehensive instruction manual contains over 25 lessons with several examples of program design and hardware control. The Applications Manual provides theory and sample code for a number of hands-on lab projects.

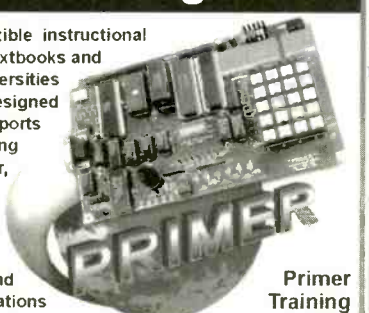

Primer Training Kit starting at $120.00 USD

Application Projects Include:

- Scan Keypad Input & Write to a Display
- Detect Light Levels with a Photocell
- Control Motor Speed using Back EMF
- Design a Waveform Generator
- Measure Temperature
- Program EPROMs
- Bus Interface an 8255 PPI
- Construct a Capacitance Meter
- Interface and Control Stepper Motors
- Design a DTMF Autodialer / Remote Controller

New! - Programming a Reaction Time Tester

Since 1985 OVER 17 YEARS OF SINGLE BOARD SOLUTIONS

EMAC, inc.
Phone 618-529-4525 Fax 618-457-0110
2390 EMAC Way, Carbondale, Illinois 62901
World Wide Web: http://www.emacinc.com

Start A Career With High Wages, Excellent Benefits and Job Security!!

With UCANDO's extraordinary maintenance training programs you can quickly and easily enter a high paying field as a maintenance technician for a very small investment of time and money.

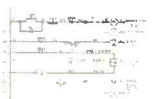

RC-M ONLY $165 RC-M is a 15 hour training course on relay ladder logic systems. Includes a 5-part video and workbook. Great Value!

PLC-M ONLY $198 PLC-M is a 32 hour training course on PLC systems. Includes (2) 4-part video's and workbook. This training is valuable.

HYD-M ONLY $209 HYD-M is a 32 hour course on Fluid Dynamics. Includes (2) 4-part video's and workbook. This Module is a must.

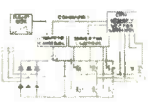

SC-M ONLY $215 SC-M is a 32 hour training course on AC & DC Servo Controllers. Includes (2) 4-part video's and workbook. Learn everything you need about AC and DC servo Control Systems.

Electronic Training Videos: Basic Electronics, Digital Electronics, TV Repair, LASER and Fiber Optic training videos available at very affordable prices starting at **Only $35.00 each.**

For information or to place an order call:

1-800-678-6113
www.ucando-corp.com
UCANDO VCR Educational Products Corp., Greenville, OH

www.americanradiohistory.com

NEW! CREDIT CARD COMPUTER II

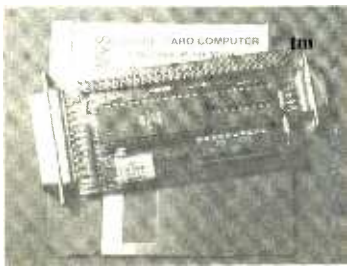

MVS PLUG-N-GO™ no cables/power supply to buy!
Low-power RISC cpu 10x faster than PIC. Z80. 8051
4m FLASH,ser,par,RTCC,4ch 12bit ADC,ISA104 bus
Built-in BASIC/Assembly, other compilers available
Friendly instructions, RS232 download (DOS/WIN)
Eval kit (1) $75, oem (1k) $21, CC computer I $14.20

640x480 VGA LCD $27

Controller for most single/dual scan LCDs
Works with lo-res (160x120, 320x240,etc.)
Use with PC or SBC, standard VGA BIOS
Source code demo shows VGA initialization
Adaptable for other CPUs (i.e. Z80, HC11)
oem(1k) $27 evalkit(1) $95 w/10"LCD $195

LO COST MINI-PC

Includes DOS,NV mem,ADC,RAM,clock,ISA bus
Ports for serial, parallel, LCD, keyboard
Program in Turbo C, BASIC, MASM, etc.
Complete, no costly development kits required
Lowest power lowest cost PC compatible available
XT: oem $27 eval $95 AT: oem $55 eval $195

PC WATCHDOG CARD

No More Hangups!

Reboots PC on hardware/software hang
3 versions: RESET, TIMER, PHONE
reset version oem $21.30, eval kit $75

PC SOLID STATE DISK

Replace mechanical drives with faster,
more relaible, more secure solid-state.
Use FLASH, NVRAM, UV EPROM.
Both DIP and PCMCIA versions from
32Kbyte (PCM1) to 1Gigabyt (PCD2)
starting at $14.20oem(1k) $50.00eval(1)

STAMP DRIVE !!

Read/Write PC compatible hard
disk, PCMCIA, Compact Flash.
RS232 to ATA adapter for Stamp,
Z80,8051,AVR,PIC,x86. ANY cpu
- 4 gigabyte capacity
- low power (5ma @5v)
- baud 115.2k and above
eval $95,oem $27,IDE ver. $14.20

SINGLE CHIP COMPUTER

ZERO external components
Built-in BASIC / Assembly
RS232 program download
1k flash,64ee,3irq,2timers
15 i/o bits,ADC,20 pin DIP
20mips faster than PIC/z80
oem(1k) eval kit(1)
$1.99 $7.00

NEW! 8K SUPER CHIP

40x the BASIC pgm space
32 i/o, 12 irq, 3 timers, bus
8K flash, 512ee, 512nvram
Watchdog w/ internal osc.
40 pin DIP part #MV8515
eval(1) $25, oem(1k) $7.10

SERIAL MINI-TERMINAL

RS232 terminal for Stamp, PC, Z80, AVR etc.
-super low current, powers from serial line
-LED backlit LCD, visible in all conditions
-115.2kbps, DB9 conn, simple commands
-specify 20 customizable or 16 tactile keys
eval(1) $75,oem(1k) $21.30,w/BASIC cpu $27

WWW.STAR.NET/PEOPLE/~MVS

MVS Box 803
Nash.,NH 03060
(508) 792 9507

.MVS

5yr Limited Warranty
Free Shipping
Mon-Fri 10-6 EST

SERVING THE EMBEDDED COMMUNITY SINCE 1979!

CIRCLE 326 ON FREE INFORMATION CARD

www.americanradiohistory.com

Electronics & Computer Training

FREE Course Catalog!

Cleveland Institute of Electronics

No matter what your career goals may be, most employers still insist on an educational background. Cleveland Institute of Electronics (CIE) offers educational training in Electronics and Computer Technology that lead to Diplomas and Degrees.

Even if you have no experience in the high-tech workplace, CIE can give you the hands-on education you need to maximize your career potential. Experience a step-by-step program designed specifically for the independent study student.

Our patented teaching method allows you to complete each lesson at your own pace so you can *study at times that are most convenient for you!*

A Wide Range of Electronics & Computer Training Available!

You'll find many different CIE Career Courses ranging from our **Computer Programming** course to our **Electronics Technology with Laboratory** course to our most advanced program, CIE's **Associate in Applied Science in Electronics Engineering Technology.**

Every program includes all the tools, lab equipment and instructor support necessary to compete in the 21st century job market.

After successful completion of a Career Course, you'll receive a diploma. Continue in your studies and you can earn an Associate in Applied Science in Electronics Engineering Technology.

There are many other courses to choose from so you can get the exact job-training course that's right for you!

Build on what you already know!

You may be eligible to apply for advanced standing in CIE's A.A.S. Degree Program based on your previous military training or academic history.

Send for a FREE Course Catalog Today!

Fill out the form on this page or call CIE toll-free at **(800) 243-6446** or visit us at **www.cie-wc.edu** and we'll send you a complete information package with our course catalog & tuition prices.

CIE 1776 E. 17th
Cleveland, OH 44114

Name _____

Address _____

_____

Apt _____

City _____

State _____

Zip _____

Phone _____

e-mail _____

Check box for G.I. Bill Details:

☐ Active Duty ☐ Veteran

PT30

Call 1-800-243-6446 for a FREE catalog or visit www.cie-wc.edu today!

CIRCLE 320 ON FREE INFORMATION CARD

www.americanradiohistory.com

Electronic CAD for Prototypes

If you prototype electronics, *you should be using Ivex Complete*: The Rapid Electronic Development (RED) tools that give you the power to design prototypes faster, resolve errors smarter and transition to professional boards better.

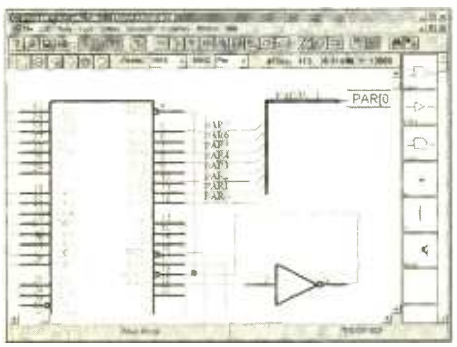

WinDraft® delivers the best combination of ease of use and performance in a full-featured tool for schematic design whether your project fits on one page or requires a multi-level hierarchy. It includes a complete library of parts that can be easily modified to update the design. Accomplish more with built-in tools such as Electrical Rules Checker, Bill of Materials and Spice netlist generation. Use WinDraft and see why people all over the world start and finish electronic projects with the industry's most affordable tool for schematic design.

WinBoard® is the professional tool that includes everything you need to layout a printed circuit board. Load your design from WinDraft Schematics and you are ready to start. Place the part footprints and start routing the board. Great for surface-mount and custom RF designs. Create your own footprints including complex pad shapes. Manufacturing outputs include Gerber photo-plots, NC Drill report and more.

Ivex Spice offers true and accurate analog simulation. It uses proven Berkeley and XSpice technology that allows you to test on-screen what could take hours or days on a breadboard. Circuit changes can be tested using several types of analyses and Ivex Spice displays on-screen waveforms that allow you to find flaws earlier in the design process.

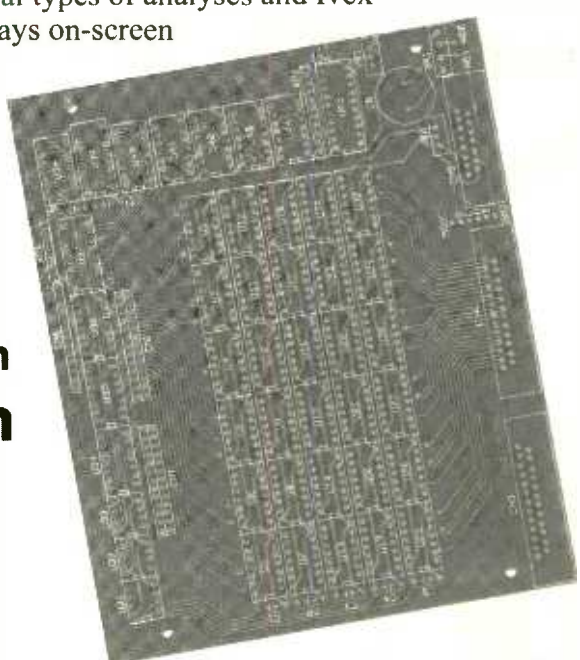

Ivex Complete

Schematics
Simulation
PCB Layout
Gerber Viewer

Starting at just
$350 USD

Order Today!

503-531-3555 **sales@ivex.com**

http://www.ivex.com

IVEX™ DESIGN INTERNATIONAL

Ivex Design International, Inc.
PO Box 7156
Beaverton, OR 97007

adv9_1

www.americanradiohistory.com

AMAZING DEVICES

NVENODD102

See in Action video on our web site at **www.amazing1.com**

Tesla Lightning Machine

- 2 to 3" Spark Discharges
- 12 VDC/115 VAC/battery
- Safe High Frequencies
- Adjustable Output and Optional Timer

TLITE Plans...$6.00 **TLITE1K**-Kit/Plans...$39.95
TLITE10-Assembled and Tested.....$54.95

Ion Ray Guns

Star Wars Technology Directs Energy

Star Wars Technology Demonstrates Weapons Potential, Force Fields, IonMotors, Antigravity etc
Projects electric shocks without contact!!
Conduct many weird and bizarre experiments
Handheld battery operated and easy to operate.

IOG9 Plans.....$10.00
IOG9K Kit/Plans.....$129.95
IOG90 Assembled/Tested.....$199.95

Mind&Brain Controllers

Incredible device Turbo charges memory, Boost mental powers, Controls stress, Speeds up healing processes and Uncover hidden potentials. High quality unit with many features.

PROTEUS Readyto use.....$199.95
ORION Lower cost unit.....$129.95

Shocker Trigger Ignitor

Variable 20,000 volt pulser used for laser flash tube, spark gap and pyro ignitor, garden pest shocker, electric fence, snake venom removal etc. 12 volt battery operation.

TRIG1K - Kit/Plans.....$29.95
TRIG10 - Lab Assembled.....$49.95

New Health Concept

Pulsed magnetic breakthrough provides miraculous healing and rejuvenating properties.

THMAG10 Magnetic Pulser.....$24.95

Mini TESLA Coil

Lights up a 4' fluorescent tube-all without any contact!! Yet only 3" tall!

MTC1K Kit/Plans.....$24.95
MTC10 Assembled.....$34.95

Ultrasonic Painfield Generators

For property and personal protection. Four transducer matrix intensifies and concentrates effect on target area.

PPF4 Plans.....$20.00
PPF4K Kit.....$199.95
PPF40 Ready to use.....$299.95

3 MI Voice Transmitter

Crystal clear . Many applications. Easy to build

FMV1 Kit and Plans..$39.95

Body Heat Telescope

Detects living bodies over 300' Heat leaks etc. Built in chopper and sens control

BHT6 Plans..$10.00 **BHT6K** Kit....$99.95
BHT60 Ready to use.....$149.95

Ultra Bright Green Laser

30 to 50x brighter than most red pointers!!
Full 5 mw range in excess of 6000 feet !!
Includes x7 range extender plans and lenses

LAPNGR5 Pointer.... $Call for Price!!

Low Cost 100,000 Volt DC Supply

Amateur experimenters source of HVDC for many applications

- 100,000 volts at .2ma
- Built in dry filled multiplier.
- Operates on 12vdc or115vac

HVOLT1 - Plans.....$8.00
HVOLT1K - Kit/Plans.....$149.95
HVOLT10 - Assembled....$249.95

Combo Tesla Coil, Jacobs Ladder, Plasma Tornado

Amazing and bizarre effects turn a normal light bulb into a spectacular plasma display!! With adjustable frequency control. Safe 12vdc input

TCL5 Plans..$8.00 **TCL5K** Kit/Plans..$59.95
TCL50 Assembled and Tested.....$99.95

Mass Driver

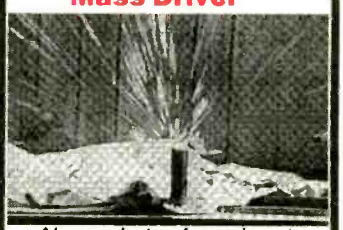

Above photo shows burst Impact of Mass Driver

Can Crusher

A can is crushed into the shape of an hour glass demonstrating the awesome power of magnetics. Very popular demo in science museums as users get to crush and keep their own can. *Kids love this!!*

Wire Exploding

Generate pyrotechnical explosive blasts for many applications. Create a new artistic concept. Uses our unique high energy pulser shielded explosion chamber.

HEP9 High Energy Pulser...$20.00

Plans pack Includes above *MASS1* Mass driver, *CANCRU1* Can crusher and *WIREXPLOD1* Wire exploder/Blast art plans. We stock all parts, kits and completed units for the above items.

Above HEP9 pulser is used for :
EMP / HERF *Generation, Build a Rail or Coil Gun, Electrothermal Gun, High Power Pulsed Laser , Mass Warping etc etc*

Information Unlimited PO Box 716 Amherst N.H. U.S.A. 03031 E-mail <info1@xtdl.com>
1 800 221 1705 Orders/Catalogs Only! Fax 1 603 672 5406 Information 1 603 673 4730 *Free Catalog on Request*
Pay by MC, VISA, Cash, Check, MO. Add $5.00 S&H . Overseas Contact for Proforma

CIRCLE 220 ON FREE INFORMATION CARD

The Standard for checking Capacitors in-circuit

Good enough to be the choice of Panasonic, Pioneer, NBC, ABC, Ford, JVC, NASA and thousands of independent service technicians.

Inexpensive enough to pay for itself in just one day's repairs. At $179, it's affordable.

And with a 60 day trial period, satisfaction guaranteed or money-back policy, the only thing you can lose is all the time you're currently spending on trying to repair all those dogs you've given up on.

CapAnalyzer 88A

Locate shorted or leaky components or conditions to the exact spot *in-circuit*

Still cutting up the pcb, and unsoldering every part trying to guess at where the short is?

$179

Your DVM shows the same shorted reading all along the pcb trace. LeakSeeker 82B has the resolution to find the defective component. Touch pads along the trace, and LeakSeeker beeps highest in pitch at the defect's pad. Now you can locate a shorted part only a quarter of an inch away from a good part. Short can be from 0 to 150 ohms

LeakSeeker 82B

***Available at your distributor, or call* 561-487-6103**

Electronic Design Specialists www.eds-inc.com

www.americanradiohistory.com

World's Smallest 68HC11 Microcontroller Modules!

MicroStamp11™

- telemetry
- microrobotics
- smart toys
- animatronics
- model railroading
- home automation

- tiny, light-weight (0.5 oz.)
- 1-inch x 1.4-inch 68HC11 module
- on-board 5V regulator
- 8MHz crystal (9.83MHz on Turbo version)
- choice of 8K or 32K EEPROM
- 32K RAM + 32K EEPROM on 64K version
- plugs into your breadboard like a DIP
- SCI (UART), SPI, Output Compares, Input Captures, harware timer, pulse accumulator
- all 14 I/O lines and 2 interrupts brought out to versatile 20-pin connector
- program in BASIC, assembler, or C
- easy code-loading with Docking Module
- Starter Packages:*

8K EEPROM (#MS11SP8K).....$49
32K EEPROM (#MS11SP32K).....$77
32K EE+32K RAM (#MS11SP64K)...$90

** Includes MicroStamp11, manual, PC software (freeware assembler, SBASIC compiler, MicroLoad utility, and sample programs), serial cable, Docking Module, and accessories.*

Attention OEMs:
Embed MicroStamp11 modules into your product! only $20 each (100-pc. price, 8K version)

MicroCore-11™

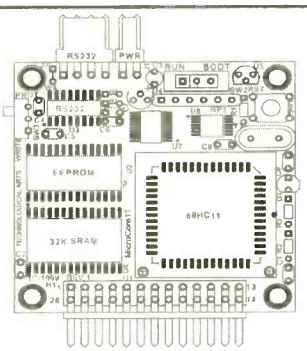

- tiny 2-inch x 2-inch 68HC11 module
- 12 inputs/outputs plus 8 analog inputs
- RS232, 5V regulator, 8MHz crystal
- 32K SRAM plus 8K or 32K EEPROM
- plugs into your breadboard like a DIP
- easy programming from any PC
- ideal for building MicroMouse robots
- now available in Turbo version (9.83MHz)

8K Starter Package #MC11SP8K.....$68
32K Starter Package #MC11SP32K.....$93
Motor driver boards, LCD/keypad/keyboard interface & prototyping cards available

Technological Arts

Many other modules & accessories available.
Visit our website at:
www.technologicalarts.com
sales@technologicalarts.com
TOLL-FREE: 1-877-963-8996
Phone: (416) 963-8996
Fax: (416) 963-9179
Visa • MasterCard • Discover • Amex

VISION ELECTRONICS

- 1 Year Warranty
- Money Back Guarantee
- No Rolls/Jitters/Flickers/Fading

INTELESTAR

Buy 1 Unit, Get the 2nd for 1/2 Price

COPY RENTAL TAPES WITH OUR VIDEO STABILIZERS

1-800-562-2252
2609 S. 156th Circle • Omaha, NE 68130
http://www.modernelectronics.com

HIGH QUALITY FM
BROADCAST EQUIPMENT
- SINCE 1990 -

You know you want it! We've got it: *LPFM & High Power,* Stereo FM Transmitters, RF Amplifiers, Low Pass Filters, Antennas, Mixing Boards, Microphones, CD Players, Compressor/Limiters, Digital Reverbs, Automation Software, Studio to Transmitter Links, Emergency Alert Systems, RF Test Equipment, Kits, RF Parts, and much more. Best Prices, Highest Quality. Give Us A Call or Buy It Online...

www.progressive-concepts.com
305 SOUTH BARTLETT ROAD, STREAMWOOD, IL 60107
VOICE: (630)736-9822 FAX: (630)736-0353

ORDERS: WWW.CONITEC.NET

$333 COMPLETE KIT

GALEP 4
UNIVERSAL PROGRAMMER

Introducing a pocket programmer with true **Universal Output**

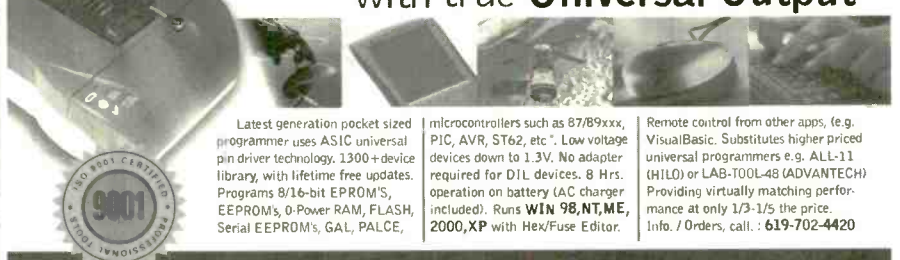

Latest generation pocket sized programmer uses ASIC universal pin driver technology. 1300+device library, with lifetime free updates. Programs 8/16-bit EPROM'S, EEPROMs, 0-Power RAM, FLASH, Serial EEPROM's, GAL, PALCE, microcontrollers such as 87/89xxx, PIC, AVR, ST62, etc ". Low voltage devices down to 1.3V. No adapter required for DIL devices. 8 Hrs. operation on battery (AC charger included). Runs **WIN 98,NT,ME, 2000,XP** with Hex/Fuse Editor. Remote control from other apps, (e.g. VisualBasic. Substitutes higher priced universal programmers e.g. ALL-11 (HILO) or LAB-TOOL-48 (ADVANTECH) Providing virtually matching performance at only 1/3-1/5 the price. Info. / Orders, call. : **619-702-4420**

ISO 9001 CERTIFIED PROFESSIONAL TOOLS

CONITEC DATASYSTEMS - 1961 4TH AVE, SUITE 301 - SAN DIEGO, CA 92101 - TEL: 619-702-4420 FAX: 619-702-4419

Poptronics
Interactive Edition

Projects...Courses...Articles...& more

Read it on the WEB!

- An e-magazine for everyone who loves electronics.
- Interesting articles and related items.

www.poptronics.com/interactive

LEARN ELECTRONICS REPAIRS!
Home study. Learn how to work on TV's, camcorders, VCRs, stereos, sound and lighting, alarm systems, more.
FREE LITERATURE: 800-362-7070
Name _____ Age ____
Address _____ Phone ( ) _____
City/State _____ Zip _____
School of Electronics, PCDI, Dept. ELM341
430 Technology Pkwy., Norcross, GA 30092

BE AN ELECTRICIAN!
Home study. Maintain and install electrical systems, wiring, utilities, phones, more.
FREE LITERATURE: 800-362-7070
Name _____ Age ____
Address _____ Phone ( ) _____
City/State _____ Zip _____
Electrician School, Dept. TEM341, PCDI
430 Technology Pky., Norcross, GA 30092

www.americanradiohistory.com

CALL TOLL-FREE
(800) 292-7711
Orders Only
Se Habla Español

C&S SALES

CALL OR WRITE FOR OUR **FREE** 64 PAGE CATALOG!
(800) 445-3201

Secure On-line Ordering @ cs-sales.com

Digital Multimeters

Elenco Model M-1740

$19.95

11 Functions:
- Freq. to 20MHz
- Cap. to 20µF
- AC/DC Voltage
- AC/DC Current
- Beeper
- Diode Test
- Transistor Test
- Meets UL-1244 safety specs

Elenco Model LCR-1810

$89.95

- Cap. 0.1pF to 20µF
- Inductance 1µH to 20H
- Resistance 0.01Ω to 2,000MΩ
- Temperature -20°C to 750°C
- DC Volts 0 - 20V
- Freq. up to 15MHz
- Diode/Audible Continuity Test
- Signal Output Function

Elenco Model LCM-1950

$65

- Large 1" 3 3/4 Digit LCD
- Autoranging Freq. to 4MHz
- Cap. to 400µF
- Inductance to 40H
- Res. to 4,000MΩ
- Logic Test
- Diode & Transistor Test
- Audible Continuity Test

LCR Bridge

B&K Model 878

$229

- Accurately measures capacitance, resistance, and inductance
- Measures dissipation factor of capacitors and Q of inductors.

Test Equipment

Elenco Four Functions in One Instrument Model MX-9300B

Features:
- One instrument with four test and measuring systems:
  - 1.3GHz Frequency Counter
  - 2MHz Sweep Function Generator
  - Digital Multimeter
  - Digital Triple Power Supply

$450

Elenco 3MHz Sweep Function Generator with built-in 60MHz Frequency Counter Model GF-8046

$199.95

Generates square, triangle, and sine waveforms, and TTL, CMOS pulse.

GF-8025 - Without Counter $139.95

20MHz Sweep / Function Generator with Frequency Counter Model 4040A

- 0.2Hz to 20MHz
- AM & FM Modulation
- Burst Operation
- External Frequency Counter to 30MHz
- Linear and Log Sweep

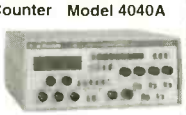

10MHz Model 4017A	$325	$445
5MHz Model 4011A	$259	
2MHz Model 4010A	$225	

B&K PRECISION

Elenco Handheld Universal Counter 1MHz - 2.8GHz Model F-2800

$99

Sensitivity:
- <1.5mV @ 100MHz
- <5mV @ 250MHz
- <5mV @ 1GHz
- <100mV @ 2.4GHz

Features 10 digit display, 16 segment and RF signal strength bargraph.

Includes antenna, NiCad battery, and AC adapter.

C-2800 Case w/ Belt Clip $14.95

Elenco Quad Power Supply Model XP-581

4 Fully Regulated Power Supplies in 1 Unit

$75

4 DC Voltages: *3 fixed:* +5V @ 3A, +12V @ 1A, *1 variable:* 2.5 - 20V @ 2A • Fully Regulated & Short Protected • Voltage & Current Meters • All Metal Case

Elenco Power Supply Model XP-603

$75

- 0-30VDC @ 3A Output
- 3A Fused Current Protection
- Current Limiting Short Protection
- 0.025Ω Output Impedance

Elenco RF Generator with Counter (100kHz - 150MHz) Model SG-9500

$225

Features internal AM mod. of 1kHz, RF output 100MV - 35MHz. Audio output 1kHz @ 1V RMS.

SG-9000 (analog, w/o counter) $119

Elenco 10Hz - 1MHz Digital Audio Generator Model SG-9300

$225

Features built-in 150MHz frequency counter, low distortion and sine/square waves.

SG-9200 (w/o counter) $119

Quantity Discounts Available

Deluxe Soldering Stations

Elenco SL-5 Series

Electronically controlled, ideal for professionals, students, and hobbyists. Available in kit form or assembled.

Works w/ any iron! Turn any soldering iron into a variable iron.

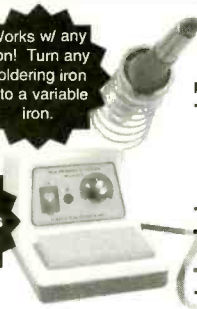

As Low As $24.95

Features:
- Cushion Grip Handle Soldering Iron (optional) with Grounded Tip for Soldering Static-Sensitive Devices. Easily Replaceable. Uses Long-Life, Plated Conical Tip.
- Heavy Steel, Non-Slip Base.
- Iron Holder Funnel - Reversible, left or right side.
- Steel Tray for Sponge Pad.
- Sponge Pad.

Ordering Information:

Model SL-5 - No iron. (Kit SL-5K) $24.95

Model SL-5-40 - Includes 40W UL iron. (Kit SL-5K-40) $29.95

Elenco Model SL-30

$79.95

- Tip temperature changeable from 300°F (150°C) to 900°F (480°C).
- Temperature is maintained within +10°F of its preset temperature.
- The tip is isolated from the AC line by a 24V transformer
- The tip is grounded to eliminate static charges.

SL-10 - Same as SL-30 w/o digital display $54.95

Weller® Low Cost Soldering Iron Model WLC100

- Variable power control produces 5-40 watts.
- Ideal for hobbyists, DIYers and students.
- Compiete with 40W Iron.

$34.95

Elenco Oscilloscopes

Free Dust Cover and 2 Probes

S-1325 25MHz Dual Trace	$325	S-1345 40MHz Delayed Sweep	$549
S-1330 25MHz Delayed Sweep	$439	S-1360 60MHz Delayed Sweep	$725
S-1340 40MHz Dual Trace	$475	S-1390 100MHz Delayed Sweep	$895

Deluxe 29pc. Computer Service Tool Kit $36.95 Elenco Model TK-1200

Includes Soldering Iron, Solder, Long Nose Pliers, Diagonal Pliers, 11 pc. Screwdriver Bit Set, Wire Stripper, IC Inserter, IC Extractor, Screwdriver, Phillips Screwdriver, Desoldering Pump, and more!

Elenco Educational Kits

Model XK-150

Digital / Analog Trainer

$89.95

- 830-pin Breadboard
- 8 Data Switches
- 8 LED Buffered Readouts
- Built-in Function Generator (sine and square wave)
- Built-in Clock Generator
- Variable Power Supply

OWI Model OWI-007

Robotic Arm Trainer

$82.50

Model AK-780K

Two IC Radio Kit

$9.95

Model AK-700

Pulse/Tone Telephone Kit Flashing Neon Lights Great School Project

$14.95

Model RCC-7K

Radio Control Car Kit

$27.95

- 7 Functions
- Transmitter Included

Model M-1005K

DMM Kit

- Transistor Test
- Diode Test
- Overload Protection
- Pocket Size

$18.95

Model K4001

7W Amplifier

$12.95

Electronic Science Lab

Maxitronix 500-in-1 Electronic Project Lab Model MX-909

Everything you need to build 500 exciting electronic projects:
- Learn the basics of electronics. 500 different electronic experiments, special lighting effects, radio transmitter and receivers, sound effects, cool games and *MORE!*
- Includes built-in breadboard and an LCD.
- Explore amplifiers, analog and digital circuits plus how to read schematic diagrams.
- Includes 11 parts.
- Lab-style manual included.
- Requires 6 "AA" batteries.

MX-908 - 300-in-1 Lab	$59.95
MX-907 - 200-in-1 Lab	$44.95
MX-906 - 130-in-1 Lab	$29.95
EP-50 - 50-in-1 Lab	$18.95

$149

Guaranteed Lowest Prices

UPS SHIPPING: 48 STATES 5% (Minimum $5.00)
OTHERS CALL FOR DETAILS
IL Residents add 8.25% Sales Tax

SEE US ON THE WEB → http://www.cs-sales.com

C&S SALES, INC.

150 W. CARPENTER AVENUE
WHEELING, IL 60090
FAX: (847) 541-9904 (847) 541-0710

15 DAY MONEY BACK GUARANTEE

2 YEAR FACTORY WARRANTY

PRICES SUBJECT TO CHANGE WITHOUT NOTICE

CIRCLE 290 ON FREE INFORMATION CARD

www.americanradiohistory.com

RF Modules

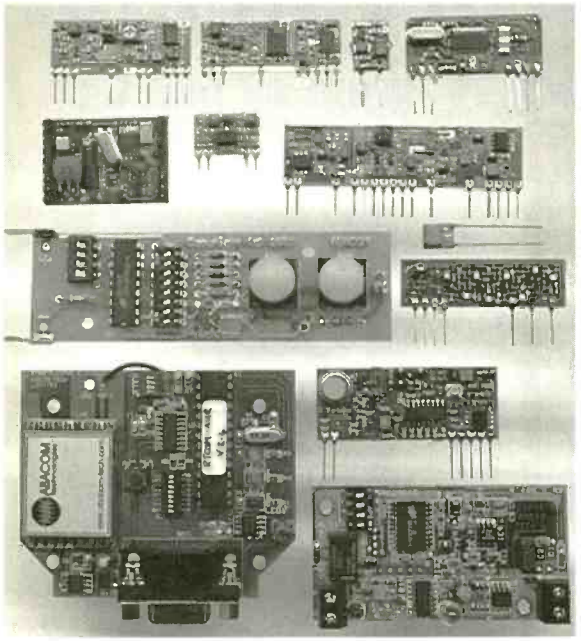

www.abacom-tech.com

ABACOM Technologies

Tel. +1(416)236 3858
Fax: +1(416)236 8866
abacom@abacom-tech.com

$62 PCBs

And our layout software is **FREE!**

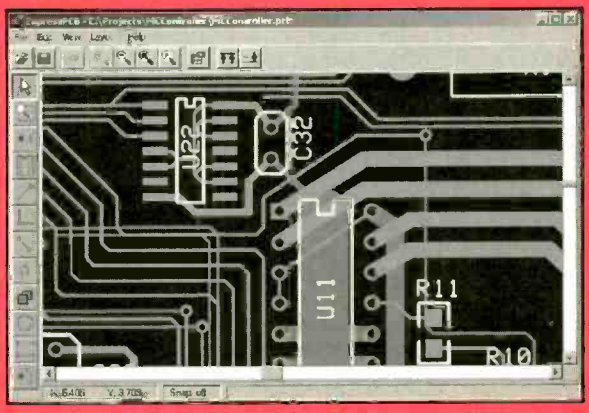

Download our FREE layout software
Design your two-sided plated-through PCB
Send us your design with just a click
Receive your boards in a few business days

Select our MiniBoard service and get three top quality 2.5" x 3.8" PCBs for $62 – shipping included!

VISA expresspcb.com MasterCard

Miniature Transmitters and Receivers

2 Button / 3 Channel Transmitter

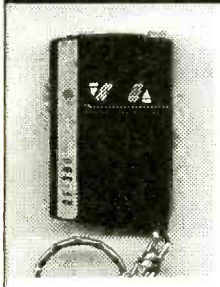

RF300T

1....$22.95
5.....$19.95 ea
10...$16.95 ea

RF300XT

1....$25.95
5.....$22.95 ea
10...$19.95 ea

- 300' (XT), 150' (T) Range
- Frequency: 318 MHz
- 59,049 Settable Security Codes
- 12 Volt Battery and Keychain Included
- Current Draw: 4.8 ma
- Fully Assembled in Case
- Dimensions: 1.25" x 2.0" x .5"
- Push both buttons for the 3rd Channel
- Slide Button Cover Included

4 Button / 15 Channel Transmitter

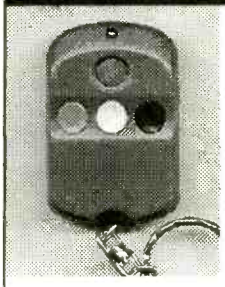

RF304XT

1....$27.95
5.....$24.95 ea
10...$21.95 ea

- 250' Range
- Frequency: 318 MHz
- 6,561 Settable Security Codes
- 12 Volt Battery and Keychain Included
- Current Draw: 4.6 ma
- Fully Assembled in Case
- Dimensions: 1.35" x 2.25" x .5"
- Push combination of buttons to achieve up to 15 channels

2-4 Data / 3-15 Channel Receivers

RF300RL
RF300RM

1....$27.95
5.....$24.95 ea
10...$22.95 ea

RF304RL
RF304RM

1....$29.95
5.....$26.95 ea
10...$23.95 ea

- Compatible with 300/4 Transmitters
- 11-24 volts DC Operating Voltage
- 13 ma. Current Draw
- Latching (L) or Momentary (M) Output
- Kits Available (subtract $5.00 ea.)
- Dimensions: 1.25" x 3.75" x .5"
- 2 (300) / 4 (304) Output Data Lines
- Binary to Dec / Hex Converter can achieve up to 15 channels

- Alarm Systems
- Garage / Gate Openers
- Lighting Control
- Magic Props
- Medical Alert
- Monitoring Systems
- Industrial Controls
- Surveillance Control
- Motor Control
- Schematics Available
- Receiver Board Layout Available
- Custom Design Consulting Available

Visitect Inc. (510) 651-1425 Fax: (510) 651-8454 Email: Support@Visitect.Com
P.O. Box 14156, Fremont, CA 94539 Visa / Mastercard, COD

CIRCLE 224 ON FREE INFORMATION CARD

www.americanradiohistory.com

FCC Course with Certificate

A Powerful 19 Lesson Self-Study Program on one CD!

FCC Exam Review Course

After completing this course you will be ready to take the FCC examination for a General Radiotelephone Operator License.

The General Radiotelephone Operator License is required to adjust, maintain or repair any FCC licensed radiotelephone transmitters in the aviation, maritime and international fixed public radio services. It is issued for the lifetime of the holder.

Through the years Cleveland Institute of Electronics (CIE) has been able to compile a great amount of information concerning the types of questions that the FCC include in their examinations.

Because of the extensive FCC sample questions in this course, you can look forward with confidence to passing the FCC exam particularly if you heed the hints given throughout the course.

Here's what you'll get!

19 FCC Lessons on CD ROM

Every lesson is presented in a clear and easy-to-understand format which makes learning this material fun and easy. After each lesson you'll take an exam. You can take it on-line or fill out one of the answer sheets we provide and mail it. After you finish the 19 lessons we'll send you a Certificate of Completion from CIE.

CIE Instructor Assistance:

Use our toll-free hot line to access our faculty and staff if you ever need assistance with your course work.

Priority Grading:

Your exams will be graded and sent back to you within 24 hrs.

Certificate of Completion:

Earn a Certificate of Completion that's suitable for framing.

Why is an FCC License so valuable?

An FCC license is an excellent credential for career advancement because it's proof of a certain level of electronics know-how. Because it is a federal examination, the FCC license with its implied knowledge is accepted by industry nationwide.

Lesson Topics Include:

- Modern Modulation Methods
- Receiving Equipment
- Batteries, Control Motors & other Power Sources
- Digital & Data Commun.
- Frequency Modulation
- Transmission Lines & Wave Guides
- Transmitters
- Antennas & Wave Propagation
- Monochrome & Color TV
- Microwave Comm. Systems
- Tuned-Staged Operation
- Suppressed - Carrier Modulation and Single
- Detection & Frequency Conversion
- Lasers in Communications & Industry
- Communications by Fiber Optics
- FCC Review Lessons Pt 1
- FCC Review Lessons Pt 2
- Pointers & Practices for Passing FCC G.C. Exam Pt 1
- Pointers & Practices for Passing FCC G.C. Exam Pt 2

Learn PC Repair

- PC Diagnostic Video
- 200 + Page Training Manual
- PC Assembly & Configuration Video
- Micro-Scope Diagnostic Software (LE)
- CD-ROM - contains videos and manual

02-020 ..... **$99.95**

Motor Controls 101

This CD ROM trainer uses pictures, sounds, animations & interactive circuits to teach you the basics of motor control. A Certificate of Completion may be printed on your printer if you achieve a passing score on the included test.

02-050 (not a CIE certificate) **$99.95**

More CIE Certificate Courses

AC/DC Electronics Course with Lab
03-introb (39 graded lessons w/ cert) .. **$225**

Intro to Web Site Design
01-M410 (10 graded lessons w/ cert) .. **$245**

Sodlering Course with Lab
01-SD01 (3 graded lessons w/ cert) **$95**

Programmable Controller Course
01-SD01 (1 graded lesson w/ cert) **$65**

Digital Data Communications with Lab
01-DD01 (11 graded lessons w/ cert) .. **$245**

CIE Bookstore: 1776 E. 17th, Cleveland, OH 44114 • **800 321-2155** • **www.ciebookstore.com**

Shipping & Handling: $0 - $30 **$2.75**, $30.01 - $50.00 **$5.25**, $50.01 - $100.00 **$11.75**, $100+ **$15.75** CA, HI & OH residents must add sales tax.

CIRCLE 320 ON FREE INFORMATION CARD

www.americanradiohistory.com

High Tech Video System with Audio

Only $119.00!! only $109. ea. in qty 4

Complete Package ! Includes Two B/W Cameras with I.R. (night vision) & microphones
One 5.5" B/W Monitor with Built in Switcher, Two pre-wired 60 ft hook-up cables
Everything you need to be up & running in minutes with a high tech video system!!

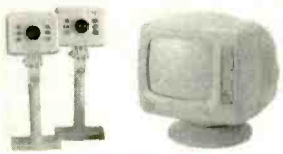

System Features:
*2 wide angle B/W cameras w I.R. & Sound
*5.5" B/W video monitor w built in switcher
*Two 60 ft. pre-wired cables
*View one or both cameras. Switching Time variable from 2 to 20 seconds
*Video easily hooks into a VCR

2GHz RF Field Strength Analyzer

ONLY $1699

- Frequency Range: 100KHz to 2,060MHz
- Narrow Band FM (NFM), Wide Band FM (WFM), AM and Single Side Band (SSB) Modulated Signals May Be Measured
- PLL Tuning System for Precise Frequency Measurement and Tuning
- LED Backlight LCD (192x192 dots)
- Built-In Frequency Counter
- Hand-Held and Battery Operated
- All Functions are Menu Selected
- RS232C for PC Interface and Printer

#3201

CTRL - D to bookmark this site

www.web-tronics.com

Don't forget the dash

- Easy to Navigate
- Includes a Search Engine That Really Works
- New Items Added Constantly

Circuit Specialists Inc.

In Business Since 1971

Intelligent Multi-Function Digital Counter (1.3GHz)

Detailed Specs on the Web

Ch A: 10 to 100 MHz
Ch B: 100 MHz to 1.3GHz
Micro-Controller Based Design

$149.00!

An intelligent multi-function counter controlled by an 8-bit micro-controller with eight high bright LED display. Four measuring functions (frequency, period, total mode & self check) Also, a 10MHz OSC OUT feature.

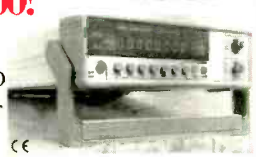

Extensive Details @ web site under TEST EQUIPMENT

Bullet CCD Cameras B&W and Color

LOWER PRICES

Detailed Specs on the Web

- Smart Rugged Metal Housing
- Extremely Low Power Consumption
- 12 Volt
- CCD Area Image Sensor for Long Camera Life
- Built-In Electronic Auto Iris for Auto Light Compensation
- No Blooming, No Burning
- 0.1 Min Lux Illumination (B&W), 1 Lux Min Lux Illumination (color)

VMBLT1020 B&W, 21mm(D)x58.5mm(L) $49.00 any qty.

VMBLT1020W B&W Weatherproof, 21mm(D)x58.5mm(L) $69.00 any qty.

VMBLTJC19BW COLOR Weatherproof, 17mm(D) x88mm(L) $109.00 any qty.

Intelligent DMM w RS-232

$44.50!

3999 Count Display
Multi-Function Testing with Autoranging & manual operation
hFE Test, Data Hold, Diode Test, Cont Test
Backlight, Capacitance, DCV,ACV,DCA, ACA,Resistance,Temperature (#CSI345)
ships w K-probe, rubber boot, RS-232 cable Software & test leads. Details @ web site

new! DC to AC Power Inverters !

150 watt up to 3000 watt models !

150w modified sine wave: $29.95 (G-12-015B)
300w modified sine wave: $39.95 (G-12-030)
150w pure sine wave: $69.00 (G-12-150S)
300w pure sine wave: $109.00 (G-12-300S)
800w modified sine wave: $139.00 (G-12-800)
1000w modified sine wave: $179.00 (G-12-100)
3000w modified sine wave (phase corrected). (G-12-300)..... $489.00

Industry Best Pricing!

See Our Website for DETAILED Specs.!

Our Most Sophisticated DMM

We Sold Over 700 Last Year!

NOW ONLY $149 Reg. $169

with RS-232 Interface & Software, 3-3/4 Digit, 4000 Count, Auto-Ranging with Analog Bargraph

- True RMS Mode
- 10MHz Frequency Counter
- Time Mode with Alarm, Clock, and Stop Watch
- Dual Display
- 10 Location Memory
- Min, Max, Avg and Relative Mode
- Decibel Measurement
- Cap and Ind. Measurement
- Temperature Mode (C/F)
- K Type Temperature Probe Included
- Pulse Signal for Logic & Audible Test
- Continuity/Diode Test
- Logic Test
- Auto Power OFF/"Keep ON" Mode
- Fused 20A Input with Warning Beeper
- Back Light
- Data Hold/Run Mode
- Safety Design UL1244 & VDE-0411
- Protective Holster
- Silicon Test Leads

More Details on our Web Site

PROTEK 506

Aluminum Frame & Carrier !
3 Cooling Fans
Front Panel Door
LED power indicator & HD activity
Keylock & Groundwire
IDE Ultra DMA 66/100 & Ultra Wide SCSI models available

Best Choice! ONLY $17.95 any qty.

ALUMINUM HARD DRIVE RACKS/3 fans

AMR2-3F IDE...$17.95
AMR2/UWSCSI (UW SCSI).....$23..95

Triple Output Bench Power Supply

w four 3/12 digit LCD Displays

Output: 0-30 VDC @ 2 Amps x 2 & 5V fixed @ 3 Amps x1
Input: 110VAC +/- 10%

CSI3002D-3....$169.00
(qty. 5+.....$159.00)

Details at www.web-tronics.com under Test Equipment

Mini CCDs (B/W & Color)

Sensational NEW Design for Small Observation Cameras. Smaller and Better!

LOWER PRICES

- Ultra Miniature Design
- Black & White Versions Only 25mm x 25mm
- Color Versions Only 32mm x 32mm
- Available in Standard Lens or Pinhole Lens
- All Include Pre-Wired Cable Harness for Video & Power
- 12V Regulated Power Supply Required (120mA typical power consumption)
- 0.1 LUX Rating (B/W), 1 LUX (color)
- CCD Area Image Sensor for Long Camera Life
- Back Light Compensation Circuit
- Built-In Electronic Auto Iris Lens

Detailed Specs on the Web

VMCW-H11A 32mmx32mmx30mm, Color CCD with standard lens, pre-wired cabling 12V DC Power $109.00 / $99.00 5 or more

VMCW-H12A 32mmx32mmx19mm, Color CCD with pinhole lens, pre-wired cabling, 12V DC Power Input $109.00 $99.00 5 or more

VMPS-718A 25mmx25mmx30mm, B/W CCD with standard lens, pre-wired cabling, 12V DC Power Input $49.00 / $45.00 5 or more

VMPS-250A 25mmx25mmx15mm, B/W CCD with pinhole lens, pre-wired cabling, 12V DC Power Input $49.00 / $45.00 5 or more

Bench Digital Multimeter w RS232C Interface

new!

True RMS/AC voltage & current
Digital & Analog Display
3999 Counts & 42 Segment Bar graph
Autorange & Manual Range
Data Hold, Min/Max Relative Measurement
Storage Data Display/Recall
Back Light
ADP Measurement: 400mV+/-3% 10 Digit/1mV DC
Continuity Test
Diode Test
RS232C standard interface
AC or DC power

Only $99.00! any qty.

Extensive Details @ WEB SITE Item# CSI9803R

new! O'Scope Offer

ONLY $299

30MHz! ONLY $299!
Industries Best Price!
See web for specs

- Dual Channel
- Dual Trace
- Vert Trigger
- 1 Year C.S.I. Warranty!

#OSC-1030

Manufactured for CSI by a leading O.E.M. manufacturer. See our website for detailed specifications!

3000 Series Digital R/O Bench Power Supply

♦ Low Cost Single Output ♦ 3 Amp *New Lower Prices!*

AS LOW AS $85

High stability digital read-out bench power supply featuring constant voltage and current outputs. Short-circuit protection and current limiting protection is provided. Highly accurate LED accuracy and stable line regulation make the 3000 series the perfect choice for lab and educational use.

Line Regulation: 2x10-4 +1ma
Load Regulation: 1 x 10-4 +5mv
LED Accuracy: Voltage ±1% +2 digits
Current ±1.5% +2 digits
Wave Line Noise: ≤1mvrms
Dimensions: 291mm x 158mm x 136mm

CSI3003: 0-30v/0-3amp Digital R/O Bench PS, 1x10-4+5mv Load Regulation
$89.00 5/$85.00

CSI 5003: 0-50v/0-3 amp Digital R/O Bench PS, 1x10-4 +5mv Load Regulation
$109.00 5/$99.00

See our web-site for many other power supply deals!

CIRCUIT SPECIALISTS, INC. 220 S. Country Club Dr., Mesa, AZ 85210 800-528-1417/480-464-2485/FAX: 480-464-5824

CIRCLE 233 ON FREE INFORMATION CARD

www.americanradiohistory.com

PICmicro MCU Development Tools

EPIC Plus PICmicro Programmer $59.95

Program PICmicro MCUs in BASIC!
DOS or Windows operation (includes Windows IDE software).
PicBasic Compiler - $99.95
PicBasic Pro Compiler - $249.95

Experimenter Boards
LAB-X1 for 40-pin MCUs (shown) - $199.95
LAB-X2 for 28 or 40-pin MCUs - $69.95
LAB-X3 for 18-pin MCUs - $119.95

PICProto Prototyping Boards $8.95 to $19.95
High-quality blank prototyping boards for PICmicro MCUs.

microEngineering Labs, Inc.
www.melabs.com
Phone: (719) 520-5323
Fax: (719) 520-1867
Box 60039, Colorado Springs, CO 80960

Stepper Motor Book NEW

Easy Step'n

- For the experimenter.
- Determine surplus stepper motor specs using simple easy to build test equipment.
- Build microcontroller-based control systems (flow charts and code examples).
- Build stepper motor drive circuits.
- Mechanical design considerations.
- 8.5x11 format. 205 pages. $34.95

Table of Contents: http://www.stepperstuff.com
+ $5 s/h in US. VISA, MC, AM, DS, MO, Check
CA residents please add 7.25% CA sales tax

SQUARE 1 ELECTRONICS
P.O. Box 501, Kelseyville, CA 95451
Voice (707) 279-8881 Fax (707) 279-8883
http://www.stepperstuff.com

spyoutlet.com
Security • Surveillance • Loss Prevention

Purchase your video cameras from *one of the largest importers in the U.S.*

- NEW *weatherproof* Bullet Cameras
- *Spy Pinhole Cameras* • Wireless Video
- PC Cards • Voice Changer
- Micro Recorders • Shotgun Mic
- Locksmithing • Bug Detectors
- *NEW* Phone Sentry *Plus—defeats* telephone tapping and taping
- UV Pens & Powder • *Realtime 12 hr Telephone Recording System*
- GPS Vehicle Tracking System

And much more • Quantity discounts

www.spyoutlet.com
Printed Catalog send $5.00

SPY OUTLET 2468 NIA. FALLS BLVD
TONAWANDA NY 14150 (716) 695-8660

Scrambling News
915 NW First Ave., Suite 2902, Miami FL, 33136, 305-372-9427

Pay TV and Satellite Descrambling 2002 - New! - satellite and cable. Includes the latest information. $19.95 plus $1.75 shipping.

Hacking Digital Satellite Systems Video 2002 - New! - This 90 minute video focuses on the satellite television piracy business. $29.95 plus $ 3.50 shipping.

Scrambling News Online - Online service for those interested in satellite television news. $59.95/year.

Pay TV and Satellite Descrambling Series CD-ROM - all 13 volumes over 300 pages, $59.95 plus $3.50 shipping.

Best Deal - Everything listed above for only $99.95 plus $3.50 shipping.

www.scramblingnews.com

Military

Battery Adapters

PRC-25, 77	$50
PRC-68, 126, 128, 136	$30
PRC-90, 103, 106, 125	$24
PRT-4	$10
SDU-5/E	$12

Antenna Adapters

PRC-68, 126, 128, 136	$20
Mil 5/16-24 to 3/8-24	$15

PRC68.COM
(800) 700-TEST
Brooke Clarke
3425 Deerwood Dr.
Ukiah, CA 95482-7541

Mobile Robotics
Sonar
Vision Systems
Micro Controllers
Motor Drivers
Neural Networks

Zagros Robotics
PO Box 460342
St. Louis, MO 63146-7342
(314)768-1328
http://www.zagrosrobotics.com
info@zagrosrobotics.com

PIC Programmer Kits

Super Value!

$16.95 +S&H $4.95*

The P16PRO: can program up to 40 pin PICs including the popular 16F84 & 12C508 • Needs software (extra $20) • Available assembled or starting from $16.95 for the kit.
See www.electronics123.com for more info!

The PICALL programmer can also progam Atmel AVRs in addition to the PICs it can program • Free software • PICALL programmer kit at $69.95
See www.electronics123.com for more info!

Video Camera module Code:BB004

CMOS Camera Module, Black & White, Size: 0.63"x0.63"x0.59"H. Lens: f4.9, F2.8. EIA 320Hx240V. 0.6" DIL Package. 5 pins. Pin 3 is 1V p-p composite video (75 ohm) to monitor. $36 + $5 S&H

Running Lights kit Add $6 for 8 triacs to drive light bulbs

8 LEDs with 10 push button selectable patterns. 8 speed levels! 80 combinations! $16 + $5 S&H

Toll Free: 1-888-549-3749 (USA & Canada)
Tel: (330) 549-3726. Request a FREE catalog or visit us at: www.electronics123.com for more products.
Amazon Electronics, Box 21 Columbiana OH 44408

***Top Secret* Consumertronics**
In business 25+ years - established professionals
www.tsc-global.com
Exciting Hi-Tech Survival Books, Manuals, Tapes

Stopping Power/ KW-HR Meters/VHS
Cellphone / Cordless / Pager Manuals
Voice Mail /Answ.Machine Security
Phone Color Boxes/ Caller ID,ANI Sec.
Fax Machine/PBX Security
Computer Sec./Hacker Files/Dirty2Doz
Internet Security / Frauds/Tracking
Beyond van Eck Tempest / VHS
Polygraph Secrets / Identity Theft Manual
Cons & Scams Databook / Placak Rep.
ATM/CreditCard/Check/MO Security
Mind Control / Under Attack! / EMBB
Radionics Manual / Heal Thyself!
Stealth Tech. / High Voltage Devices
Social Engin./Ultimate Success Manual
Remote Office / Casino Secrets - *100 more!*

Catalog: Descriptions, Reg.Prices, Policies
Consumertronics
+$6 S/H USA P.O. 23097, ABQ, NM 87192
505-321-1034 - Printed Catalog $3

QUICK and PAINLESS Programmable Robotics!

Ready for something different?

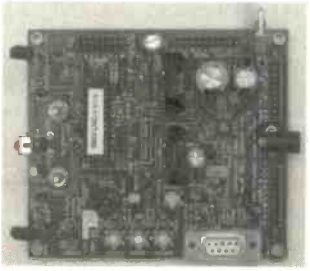

Co-Processor and Controller now separately available!

Blue Bell Design Inc.
www.bluebelldesign.com

www.americanradiohistory.com

Press-n-Peel Transfer Film

PC Boards in Minutes

8.5" x 11" Shts.
* Or Photocopy
**Use standard household iron

1. LaserPrint*
2. Press On**
3. Peel Off
4. Etch

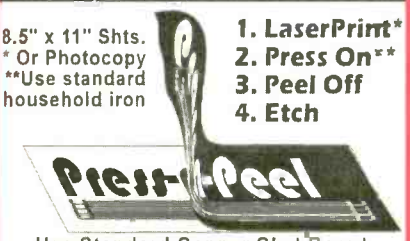

Use Standard Copper Clad Board
20 Shts $30/ 40 Shts $50/ 100 Shts $100
Visa/MC/PO/Ck/MO $4 S&H/Foreign Add $7

Techniks Inc.
P.O. Box 463, Ringoes NJ 08551
ph. 908.788.8249 fax 908.788.8837
www.techniks.com
Vist Our E-Store On-Line!

...made easy.

www.microCommander.com

Theremin
The PAiA Theremax uses the same heterodyne principles as the original turn of the century instrument for classic tone and adds features made possible by modern ICs. *Shown with optional lectern case.*

9505K Kit $89.75

FatMan Analog MIDI Synth
A complete music synthesizer with all the big bottom and phat sound that makes analog famous. 20 knobs and controls for real-time sound sculpting. Compatible with standard MIDI sources like keybcards or computers. *Desktop case or rack panel available.*

9308K Kit $154.00

Check out **http://Paia.com** for schematics, tech details, firmware source files and more...

Synthesizer Modules, Guitar Effects, Mixers, EQs, Tube PreAmps, and dozens of kits for

ELECTRONIC MUSICIANS

PAiA Electronics
3200 Teakwood Lane
Edmond, OK 73013
info@paia.com
405.340.6300
fax 405.340.6378

PCBexpress
www.pcbexpress.com

- *No tooling charge!*
- *Lot charges start at $80*
- *Simple order process*
- *Quickturn, low quantities*

TWO SERVICES FOR
CIRCUIT BOARDS
ECD

INSTANT
ON-LINE QUOTES!
(No sign-up required)
PCBpro.com

www.pcbpro.com

- *Quick Price Comparisons*
- *More options and added features*
- *Prototype & production quantities*

FIELD - STRENGTH RECEIVER - METER *A Handheld Counter-Surveillance Meter So Sensitive It's Like a Wideband Receiver!*

BROADBAND : *10 MHz to 4.5 GHz usable range*
HIGHLY SENSITIVE : *Detects - Covert Video and Audio Bugs at 20 ft. - 2.4 GHz "sealed" microwave ovens at 40 ft. For Computer Wireless Setup, RFI Sniffer, RF Line Leakage*
DUAL MODE DETECTION : *LINEAR - For measuring weakest signals; LOGARITHMIC - 1000:1 dynamic signal range*
SENSITIVITY CONTROL : *> 20 dB manually adjusted gain*
80 HR. OPERATION *(Approx.) : With 2 AA alkaline batteries*
ANALOG METER and LED DISPLAYS : *The LED display for distance and nighttime*
SILENT VIBRATE MODE : *Switchable vibrator for signal detection without direct viewing*

Including shipping and handling (CA. residents add 8% Sales Tax) $89

Alan Broadband Company
93 Arch Street
Redwood City, Ca. 94062
Phone : (888) 369-9627
Fax/Phone: (650) 369-9627

www.zapchecker.com

SMT Prototyping Adapters

Snap-Apart™ Series

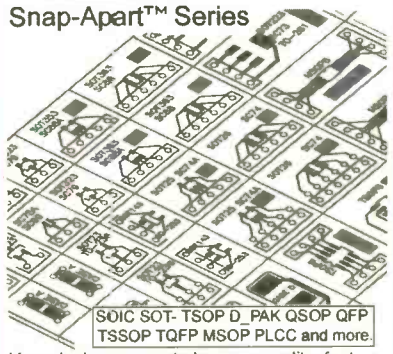

Your design concepts become reality, fast.
5"x7.6" smooth grooved, green PCB's snap apart providing SMT adapters, .100" pin strips included. No pcb layout, no waiting, no adapter hunt for most patterns with these on hand. Details on these and more on website.

BELLIN DYNAMIC SYSTEMS, INC.
www.beldynsys.com (714) 630-8024

- Rapid Development Solutions for the Technical Professional -

An Introduction to Light in Electronics

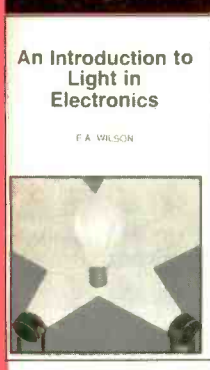

Taken for granted by us all perhaps, yet this book could not be read without it, light plays such an impressive role in daily life that we may be tempted to consider just how much we understand it. This book makes a good start into this fascinating and enlightening subject. It has been written with the general electronics enthusiast in mind.

To order Book #BP359 send $6.99 plus $3.00 for shipping in the U.S. and Canada only to Electronics Technology Today Inc., P.O. Box 240, Massapequa Park, NY 11762-0240. Payment in U.S. funds by U.S. bank check or International Money Order. Please allow 6-8 weeks for delivery.

ET08

PCB Production

Double side—12¢ per in²
Four layers—20¢ in²
Six layers—32¢ in²
UL approved
(with solder mask, Silkscreen
Three weeks)

www.mylydia.com

MYLYDIA INC.

Call 1-800-MYLYDIA
E-mail: PCBsales@mylydia.com

SUPREME SURVEILLANCE

JUST PUBLISHED! The **EXTREME** Covert Catalog details virtually every surveillance system on the World Market today. From the FBI (and their superiors) latest anti-terrorist phone/computer/and video taps, to bargain basement devices no one knows about.

Complete specs and ordering information on hundreds of surveillance and investigative hardware and software products from 14 countries. Many, many new entries for covert audio and video supplies, computer busters, thru-wall viewers, night vision gear, fax interceptors, CIA designed lock defeaters, etc.

"Absolutely fantastic! A Techie's dream come true. No fluff, no filler, just raw spy meat. Whata meal" - Kevin Murray, probably the top counter surveillance expert in the U.S. ECC, 8 1/2" x 11", ISBN 1-880-231-20-4, 437 pages, index. $49.95

Intelligence Here
404 N. Mt. Shasta Blvd.
Mt. Shasta, CA 96067
Order by Phone: 866-885-8855
www.intelligencehere.com.
Add $8.00 (priority shipping). CA residents add 8% tax.

www.americanradiohistory.com

CLASSIFIEDS

BUSINESS OPPORTUNITIES

$400 WEEKLY ASSEMBLING Electronic Circuit Boards/Products From Home. For Free Information Send SASE: Home Assembly-PT Box 216 New Britain, CT 06050-0216

CABLE TV

DISCOVER CABLE'S NEWEST BOXES! "DESCRAMBLES WHERE OTHERS FAIL" LOWEST DEALER PRICES GUARANTEED. 1-888-777-9123 1-888-675-3687

CLEARMAX OR VIEWMASTER UNIVERSAL BOXES from $78 **1-800-820-9024** OR VISIT OUR WEBSITE AT **WWW.RFTPLUS.NET**

MISC. ELECTRONICS FOR SALE

T&M ELECTRONICS. Large variety of electronic parts since 1966. Visit our Web site at www.tandmelectronics.com

SMC ELECTRONICS – Surplus and refurbished electronic equipment including repair/replacement/experimenter parts and accessories. **www.smcelectronics.com**

SMART Battery Chargers – GPS Based Frequency Standard – Digital Frequency Synthesizer – surplus parts and more, www.a-aengineering.com

PLANS-KITS-SCHEMATICS

Generate stereoscopic 3D video using cheap board cameras. 50-page booklet includes schematics, photos. Visit http://stereo-video.home.att.net.

SATELLITE

FREE Satellite TV Buyer's Guide. BIG Dishes – BIG Deals! Get the MOST free and subscription channels with C-band digital upgrade! **SKYVISION.** 800-543-3025. International 218-739-5231. www.skyvision.com

www.poptronics.com

THE COLLECTED WORKS OF MOHAMMED ULLYSES FIPS

#166—By Hugo Gernsback. Here is a collection of 21 April Fools Articles, reprinted from the pages of the magazines they appeared in, as a 74-page, 8½ × 11-inch book. The stories were written between 1933 and 1964. Some of the devices actually exist today. Others are just around the corner. All are fun and almost possible. Stories include the Cordless Radio Iron, The Visi-Talkie, Electronic Razor, 30-Day LP Record, Teleyeglasses and even Electronic Brain Servicing. Get your copy today. Ask for book **#166** and include **$9.99 (includes shipping and handling)** in the US (First Class), Canada and Overseas (surface mail), and order from **CLAGGK Inc., P.O. Box 12162, Hauppauge, NY 11788.** Payment in US funds by US bank check or International Money Order. Allow 6-8 weeks for delivery. MA05

Gernsback Publications, Inc.

275-G Marcus Blvd. Hauppauge NY 11788

POPTRONICS®
CLASSIFIED ADVERTISING ORDER FORM

Advertiser Information

Name

Company

Street Address

City/State/Zip

Telephone ( )

Signature (required on all orders)

Payment Information

Charge my:

☐ Master Card ☐ Visa ☐ Discover

Account No.

Exp. Date

☐ Full payment enclosed. Prepayment discounts offered for multiple insertions (except on credit card orders).

☐ Payment for first insertion enclose; additional payments will be made prior to closing dates. Prepayment discounts not available.

Do you want any special options? (where available)

☐ Boldface Type* Add 25% for entire ad ☐ Screened Background – Add 30%

☐ Special Heading – Add $35.00

The first word of your ad and your name will be printed in boldface caps, at no additional charge. For individual boldface words, add .50¢ each.

In what month(s) would you like your ad to run?

☐ Entire year for publications selected above.

☐ Jan. ☐ Feb. ☐ Mar. ☐ Apr. ☐ May. ☐ June ☐ July ☐ Aug. ☐ Sep. ☐ Oct. ☐ Nov. ☐ Dec.

Here's how to calculate the cost of your Regular or Expanded-Ad Classified:

Rate X Numbers of Words + Rate for Boldface + Rate for Screened Background = Cost per Insertion X Number of Months = Cost

Magazine	Rate	x	Number of Words (min. 15)	+ Boldface (add 25%)	+ Screened Background (add 30%)	= Cost Per Insertion	x Number of Months	= Cost
		x		+	+	=	x	=

Rates:

$3.00 per word **(New rate for renewals. New advertisers welcome.)**

Minimum 15 Words

Here's how to calculate the total cost of your advertising:

Prepayment Discount: (Full payment must accompany order, not applicable on credit card orders)

Prepay for ☐ 6 insertions in one magazine, 5% ☐ 12 insertions in one magazine, 10%

Subtotal _____

Less Prepayment Discount _____

TOTAL COST $ _____

Please use a separate piece of paper to write your copy, or for any special instructions you may have.

HAVE A QUESTION? CALL: 1-631-592-6720 ext. 206

Fax signed orders with credit card information to : (631) 592-6723 GPI895

www.americanradiohistory.com

The Pocket Programmer

The Best just got Better!!!

The Best portable programmer that uses the printer port instead of an internal card just got Better!! Now with easier to use Windows based software that programs E(E)prom, Flash & Dallas parts. 25/27/28 & 29 series from 16K to 8Mbit. Adapters available for MCU's 874X, 875X, Pic, Atmel, PLCC packages, Bi-Prom's, 40-Pin X16 Eproms, Rom Emulator to 32K X 8 (2716-27256) and More...

Only $149.95

Same Name, Address & Phone # for 19 Years.... Isn't it Amazing ?

Intronics, Inc.
Box 13723 / 612 Newton St.
Edwardsville, KS 66113
Tel. (913) 422-2094 Add $7.00 COD
Fax (913) 441-1623 Add $6.00 Shipping
WWW.IN-KS.COM Visa/MC/Amex/Disc

MODERN ELECTRONICS — Cable TV Descramblers

Buy 1 Descrambler, Get the 2nd for **1/2 Price**

COPY RENTAL TAPES WITH OUR VIDEO STABILIZERS

- 30 DAY FREE TRIAL!
- FREE PRODUCT CATALOG!
- BEST DEALER PRICING!
- 100% MONEY BACK GUARANTEE

1-800-906-6664
2609 S. 156th Circle • Omaha, NE 68130
http://www.modernelectronics.com

One tree can make 3,000,000 matches.

One match can burn 3,000,000 trees.

Help protect our nation's soil and water. Call for your free action packet.

1-800-THE-SOIL
WE OWE IT TO OUR CHILDREN

United States Department of Agriculture
Soil Conservation Service

ELECTRONIC MILITARY SURPLUS

FAIR RADIO SALES
WEBSITE: fairradio.com
E-MAIL: fairradio@fairradio.com
PHONE: 419-227-6573
FAX: 419-227-1313
2395 St Johns RD - Box 1105
Lima, OH 45802
VISA, MASTERCARD, DISCOVER
Address Dept. ES

2KW SOLA REGULATOR

Sola CVS 2000 Watt Constant Voltage Transformer provides a very well regulated sinusoidal waveform that is isolated from variations and disturbances in the input voltage. Also provides isolation and step-up/step-down to allow for various input/output voltages. Input 95-130/175-235/190-260/380-520 60Hz. Output 120/240VAC 60Hz 2000VA. 17.8x11.4x9.6, 115 lbs sh. Unused, $250.00 ea, 2 / $450.00

Allow money for shipping.

SEND FOR OUR LATEST CATALOG !!

Radios - Test Equipment - Tubes - Antennas

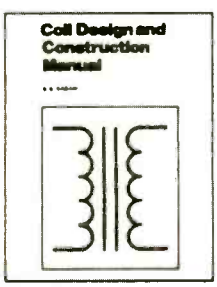

YOU CAN WIND YOUR OWN COILS?

There's no trick to it except knowing what you are doing. In a unique, 106-page book you can become expert in winding RF, IF, audio and power coils, chokes and transformers. Practically every type of coil is discussed and necessary calculations are given with the mathematical data simplified for use by anyone. Get your copy today!

Mail coupon to:
Electronics Technology Today, Inc.
P.O. Box 240 • Massapequa Park, NY 11762-0240

Please send me my copy of *Coil Design and Construction Manual* (BP160). I enclose a check or money order for $8.99 to cover the book's cost and shipping-and-handling expenses. NY state residents must add local sales tax.

Name _____

Address _____

City _____ State _____ ZIP _____

All orders must be paid in U.S. funds only. Sorry, no orders accepted outside of USA and Canada. Please allow 6-8 weeks for delivery. ET06

SERIAL LCDs

Serial LCDs work great with BASIC Stamps® and other microcontrollers. One-wire interface • simple serial protocol • low cost • high quality • in stock

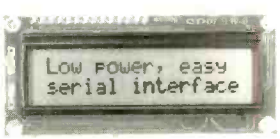

BPI-216N
- 2x16 text LCD
- 2400/9600 bps
- $45 (non-backlit)

SGX-120L
- Mini graphics LCD
- 2400/9600 bps
- just $99

Many other models available—see www.seetron.com!

Scott Edwards Electronics, Inc.
www.seetron.com • 520-459-4802

www.americanradiohistory.com

ADVERTISING INDEX

Poptronics does not assume any responsibility for errors that may appear in the index below.

Free Information Number		Page
–	Abacom	73
–	Alan Broadband Co.	77
–	All Electronics	64
–	Amazon Electronics	76
–	Bellin Dynamic Systems	77
–	Blue Bell Design, Inc.	76
–	Brooke Clarke	76
290	C&S Sales, Inc.	72
233	Circuit Specialists	75
–	CLAGGK, Inc.	CV3
–	Classified Ads	78
–	Classified Order Form	78
320	Cleveland Inst. of Electronics	68, 74
321	Command Productions	63
–	Conitec Data Systems	71
–	Consumertronics	76
–	EDE Spy Outlet	76
–	Electronic Design Specialists	70
–	Electronix	64
–	EMAC, Inc.	66
–	Engineering Express	73
–	Fair Radio Sales	79
220	Information Unlimited	70
–	Intec Automation	77
–	Intelligence Here	77
–	Intronics	79
–	IVEX Design	69
–	JDR Computer Products	65
–	LT Sound	64
–	Lynxmotion	62
–	M²L Electronics	62
324	MCM Electronics	CV4
–	Marrick, Ltd.	11
323	Mendelsons	62
326	Merrimack Valley	67
–	microEngineering Labs	76
–	Modern Electronics	79
325	Mouser Electronics	64
–	MyLydia, Inc.	77
–	North Country Radio	62
–	PAiA Electronics	77
–	PCB 123	63
–	PCB Express	77
228	Polaris Industries	61
219	Prairie Digital	63
–	Progressive Concepts	71
240	Ramsey Electronics	CV2
–	Saelig Co., LLC	65
–	School of Electronics	71
–	Scott Edwards Electronics	79
–	Scrambling News	76
–	Square 1 Electronics	65, 76
–	Techniks	77
–	Technological Arts	71
322	Test Equipment Depot	66
–	Timeline, Inc.	64
–	UCANDO Videos	66
–	Vision Electronics	71
224	Visitect, Inc.	73
–	Zagros Robotics	76

When you buy products from these advertisers, please tell them you saw their ads in Poptronics® magazine.

ADVERTISING SALES OFFICES

Gernsback Publications, Inc.
275-G Marcus Blvd.
Hauppauge, NY 11788
Tel. 631-592-6720
Fax: 631-592-6723

Larry Steckler
Publisher (ext. 201)
e-mail: advertising@gernsback.com

Adria Coren
Vice-President (ext. 208)

Ken Coren
Vice-President (ext. 267)

Marie Falcon
Advertising Director (ext. 206)

Adria Coren
Credit Manager (ext. 208)

For Advertising ONLY
EAST/SOUTHEAST/PACIFIC

Marie Falcon
275-G Marcus Blvd.
Hauppauge, NY 11788
Tel. 631-592-6720 x206
Fax: 631-592-6723
e-mail: mfalcon@gernsback.com

MIDWEST/Texas/Arkansas/ Oklahoma

Ralph Bergen
One Northfield Plaza, Suite 300
Northfield, IL 60093-1214
Tel. 847-559-0555
Fax: 847-559-0562
e-mail: bergenrj@aol.co

Subscription/ Customer Service/ Order Entry
Tel. 800-827-0383
7:30 AM - 8:30 PM CST

Poptronics®
Interactive Edition
www.poptronics.com/interactive

WWW.POPTRONICS.COM

www.americanradiohistory.com

Electronics CD ROMs

This great range of CD ROM learning resources will teach you all about electronic circuits and systems and how to design them.

Electronic Circuits and Components V2 provides an introduction to the principles and application of the most common types of electronic components and how they are used to form complete circuits. Sections on the disc include: fundamental electronic theory, active components, passive components, analogue circuits, digital circuits, fault finding and the Parts Gallery.

Digital Electronics V2 details the principles and practice of digital electronics, including logic gates, combinational and sequential logic circuits, clocks, counters, shift registers, fault finding and displays. The CD ROM also provides an introduction to microprocessor based systems.

Analog Electronics is a complete learning resource for this most difficult subject. The CD ROM includes the usual wealth of virtual laboratories as well as an electronic circuit simulator with over 50 pre-designed analog circuits which gives you the ultimate learning tool. The CD provides comprehensive coverage of analog fundamentals, transistor circuit design, op-amps, filters, oscillators, and other analog systems.

Electronic Projects is just that: a series of ten projects for students to build with all support information. The CD is designed to provide a set of projects which will complement students' work on the other 3 CDs in the Electronics Education Series. Each project on the CD is supplied with schematic diagrams, circuit and PCB layout files, component lists and comprehensive circuit explanations.

Robotics and Mechatronics is designed to enable those with little previous experience of electronics to build electromechanical systems. The CD ROM deals with all aspects of robotics from the control systems used, the transducers available, motors/actuators and the circuits to drive them. Full case study material (include the NASA Mars Rover, the Milford spider and the Furby) is used to show students how practical robotic systems are designed.

Digital Works is a highly interactive scalable digital logic simulator designed to allow electronics and computer science students to build complex digital logic circuits incorporating circuit macros, 4000 and 74 series logic.

CADPACK includes software for schematic capture, circuit simulation, and PCB design and is capable of producing industrial quality schematics and circuit board layouts. CADPACK includes unique circuit design and animation/simulation that will help your students understand the basic operation of many circuits.

Analog Filters is a complete course in filter design and synthesis and contains expert systems to assist in designing active and passive filters.

PICmicro programming tools and CD ROMs

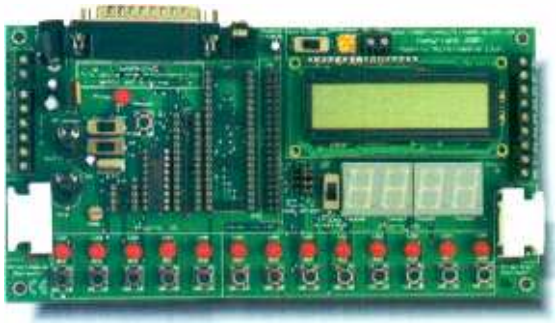

This flexible development board allows you to program 8, 18, 28, 40 pin PICmicro microcontrollers as well as test/develop code. All programming software is included and several resources which allow students to learn and program PICmicro microcontrollers are available - Flowcode, C for PICmicro microcontrollers and Assembly for PICmicro microcontrollers. A board is needed for the CD's below:

Flowcode is a very high level language programming system for PICmicro® microcontrollers based on flowcharts. Flowcode is a powerful language that uses macros to facilitate the control of complex devices like 7-sement displays, motor controllers, and LCD displays. The use of macros allows students to control highly complex electronic devices without getting bogged down in understanding the programming involved. Board not included.

The **Assembly for PICmicro microcontrollers** CD ROM (previously known as PICtutor) contains a complete course in programming the PIC16F84 microcontroller from Arizona Microchip. The CD includes a full suite of tutorials starting at basic concepts and progressing complex techniques including interrupts. An IDE and all programming tools are included. Board not included.

The **C for PICmicro® microcontrollers** CD ROM is designed for students and professionals who need to learn how to program embedded microcontrollers in C. C for PICmicro MCUs also provides all the tools needed actually program a virtually any PICmicro - including a full C compiler and device programmer (via printer port). Although the course focuses on the use of the PICmicro® series of microcontrollers this CD ROM will provide a relevant background in C programming for any microcontroller. Board not included.

Order Form

Please allow 6 weeks delivery

	Student / home version	Institution version
Electronic Ccts. & Comps. 2	$50	$99
Digital Electronics 2	$50	$99
Analog Electronics	$50	$99
Electronic Projects	$75	$159
Robotics and Mechatronics	$50	$99
Digital Works	$50	$99
CADPACK	$75	$159
Analog Filters	$75	$159
Assembly for PICmicros	$50	$159
C for PICmicros	$50	$159
Flowcode for PICmicros	$50	$99
PICmicro development board	$159	
Postage - USA	$5	$5
Postage - Canada	$10	$10

Note Institution versions have increased functionality, increased assessment and are licenced for use in schools and corporations

Name: _____

Address: _____

Zip: _____ Phone: _____

Card Type: _____
Mastercard, Visa, or Discover only

Card number: _____ Expire date: _____

I have enclosed my check for $ _____ Signature: _____

Please charge my credit card for $ _____ _____

Phone your order to us on:

631-592-6721

or send your order to:

CLAGGK Inc.,
PO Box 12162,
Hauppage, NY 11788

CL02

Order online NOW from: www.poptronics.com

www.americanradiohistory.com

MCM Electronics

MCM

What You Want..... Today!™

click it
phone it
fax it

mcmelectronics®

You Must Provide this Source Code to Receive Special Pricing

POP102

call toll free
1-800-543-4330

fax toll free
1-800-765-6960

customer service call toll free
1-877-626-3532

www.mcmelectronics.com/magazine

For more Electronics Visit our website

- Audio Products
- Books
- Cameras
- Car Audio and Security
- Computer Accessories
- Games
- Headphones
- Home Theater
- Joysticks
- Personal Electronics
- Radios
- Receivers
- Test Equipment
- Tools
- Tool Boxes/Cases
- More

Troubleshooting & Diagnostics™ 2002

Features over 400 programs designed to work with the newest operating systems, CPUs and peripherals. Includes diagnostic tools, system info and file recovery utilities, hard drive and modem utilities, anti-virus programs and much more. **System requirements:** Windows 2000/ME/98/95, 16Mb RAM.

Order # 83-9168 Reg. ~~$9.99~~

Only! $9.39

PC Diagnostics and Repair Tools 2002

This CD-ROM contains 627 MB best PC troubleshooting tools for improving your PC performance: Diagnosis, optimization, repair, cleanup tools. uninstaller, back-up, recovery, file and system management, network management, speed up tools, benchmark, registry utilities, hardware testing and optimization tools and much more •This is the best and largest PC tool collection for troubleshooting, repair and performance tuning!

Order # 83-9166 Reg. ~~$9.99~~

Only! $8.99

Digital Multimeter Kit

This full funciton DMM kit is great for schools as well as the electronics enthusiast. **Features:** •Measures AC and DC voltage, DC current and resistance •Diode test •Transitor test •Low battery indicator •Comes complete with tests leads and owner/assembly manual **Specifications: DC Voltage:** •Ranges: 200mV, 2V, 20V, 200V, 1000V **AC Voltage:** •Ranges: 200V, 750V **DC Current:** •Ranges: 200µA, 2mA, 20mA, 200mA, 10A **Resistance:** •Ranges: 200ohm, 2Kohm, 20Kohm, 200Kohm, 2Mohm •NPN and PNP hFE test **General:** •Power requirements: One 9V battery (#290-080) •90 day warranty

Order # 72-6562 Reg. ~~$19.95~~

Only! $18.95

Sorry-Books and software are not returnable

You must provide this Source Code to receive a discount
SOURCE CODE # POP102

Build Your Own Robot Kit

A dynamic learning platform! Pre-programmed for quick enjoyment, and comes with instructions for custom applications •Customizable, no soldering required •Learn basic skills toward advanced robot building •The 9-volt battery-powered robot (battery not included) is driven by dual electric motors and controlled by a Microchip PIC16C505 PICmicro Microcontroller •With two light sensors and infra-red "collision detectors" the robot is pre-programmed with the following "behaviors" built in: Random Movement - change forward direction when an object is encountered •"Photovore" - seek out light •"Photophobe" - avoid light •"Maze Solver" - follow wall •All of the software code for the Basic Stamp applications is included on the accompanying CD-ROM along with illustrated assembly instructions, and many schematics

Order #	(1-9 kits)	(10 kits-up)
81-3202	$59.50	$57.50

BattleBots®: Official Guide

•View the metal-crunching destruction from the front lines with this fully authorized guide to one of today's hottest TV shows •Browse through photographs of every major BattleBot including construction diagrams and get details on weight, speed, and weapon type •Informative and entertaining, this book kicks BOT!

Order #81-3198 $24.50

Home Automation and Wiring

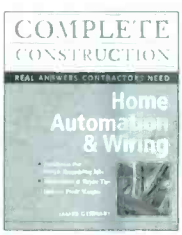

•Demand for fully automated homes is growing, why not get a jump on this highly lucrative market? •With this book, you can easily install the most modern and efficient systems for complete personal control of entertainment, temperature and light, water, communications, security, and more •Satisfy the skyrocketing consumer demand for state-of-the-art home technology •Step by step, you'll learn how to put together these systems to deliver maximum programmed energy savings to your clients, not to mention great potential

Order #81-3204 $49.50

Source Code: POP102

Prices effective October 8 through December 27, 2002

A Premier Farnell Company

CIRCLE 324 ON FREE INFORMATION CARD

www.americanradiohistory.com