BASIC ELECTRONIC CIRCUITRY

www.poptronics.com JULY 2002

Poptronics®

Formerly Popular Electronics® and Electronics NOW

BASIC CIRCUITRY

Downloadable Circuits see page 55

PINEWOOD DERBY DIGITAL RACE TIMER

See the full plans inside for this Z80-based timer

"The Tubester"

Learn the ropes of vacuum-tube technology

BUILD THIS!

Amazing Grace

Grace Hopper—programmer, pioneer, and patriot

A GERNSBACK PUBLICATION

$4.99 U.S.
$6.50CAN.

Also Inside:

- Basic Circuit Design
- AC Adapter Anatomy
- Deciphering Visual Basic
- The debut of "PIC-tronics"
- Underwater Phone Booths

#BXBDCCH ********************3-DIGIT 210
#21046DHM951RD007# TRON 200
3 S104 P354 MAY 2003
ROBERT DAHM
9515 RED RAIN PATH
COLUMBIA MD 21046-2073

www.americanradiohistory.com

JOIN THE

ROBOT REVOLUTION

BRING A ROBOT TO LIFE WITH THIS FUN KIT!

There's no better gift for dad than a TAB 'do-it-yourself' robotics book and that's why we've designated June as TAB Robo Dad month. McGraw-Hill, the undisputed leader of premier robotics titles for electronic hobbyists, is the perfect gateway to the fascinating world of robotics.

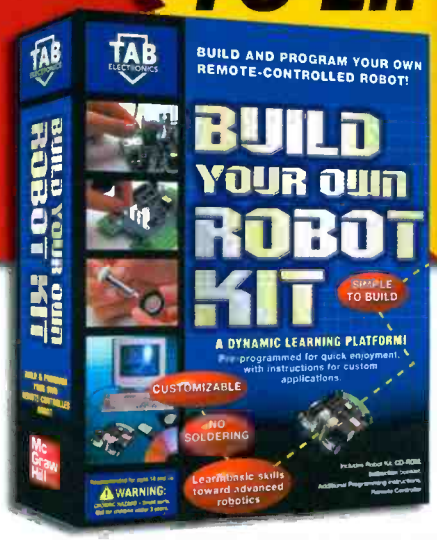

BUILD YOUR OWN ROBOT KIT

MYKE PREDKO AND BEN WIRZ

May 2002 • 0-07-138787-0

$59.95

This simple-to-build robot will provide any hobbyist with hours of enjoyment and is a great platform on which to develop more sophisticated applications. Great for ages 14 and up. The kit comes with a pre-assembled PCB, robot hardware, remote control, instruction booklet and CD-ROM with additional programming instructions.

BUILD A REMOTE-CONTROLLED ROBOT

DAVID SHIRCLIFF

2002 • 0-07-138543-6

$19.95 • PAPER

Presents complete plans for building the inexpensive Questor Robot. Includes step-by-step detailed photographs of every stage of the assembly process.

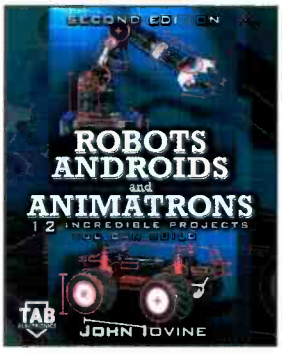

ROBOTS, ANDROIDS, AND ANIMATRONS

12 Incredible Projects You Can Build

SECOND EDITION

JOHN IOVINE

2002 • 0-07-137683-6

$19.95 • PAPER

Provides fully-illustrated plans for building 12 robots including walker robots, solar ball robots, and speech-controlled mobile robots. A new chapter on robotic arms that interface to speech recognition kits is included.

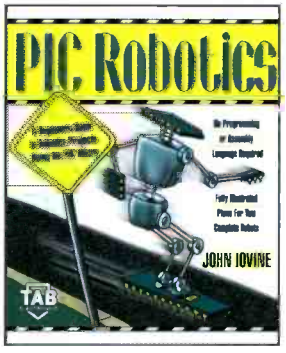

PIC ROBOTICS

A Beginner's Guide to Robotics Projects Using the PIC Micro

JOHN IOVINE

June 2002 • 0-07-137324-1

$19.95 • PAPER

Features illustrated plans for 11 robots each with a PIC Micro brain. Completed parts lists for all projects are included.

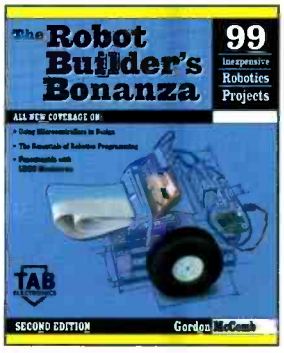

THE ROBOT BUILDER'S BONANZA

99 Inexpensive Robotics Projects

SECOND EDITION

GORDON McCOMB

2000 • 0-07-136296-7

$24.95 • PAPER

This best-seller is the bible of amateur robotics building—packed with the latest in servo motor technology, microcontroller robots, remote control, Lego Mindstorms Kits, and other commercial kits.

CIRCLE 143 ON FREE INFORMATION CARD

amazon.com www.Amazon.com/robots

A Division of The McGraw-Hill Companies

www.americanradiohistory.com

July 2002, Vol. 3, No. 7

Poptronics®

FEATURES

PINEWOOD DERBY DIGITAL RACE TIMER ..... *Doug Malone* 29
Ready, Set, Go. Design and build this digital timer for a fair and fun race.

BUILD "THE TUBESTER" ..... *Nick Cinquino and Gordon Macmillan* 23
Here's an inexpensive, safe, and easy introduction into vacuum-tube electronics, audio pre-amps, and audio distortion.

AMAZING GRACE ..... *Maria Orlando* 26
Take a glimpse at the accomplishments of a pioneering programmer's lifetime of service and success.

PRODUCT REVIEWS

GIZMO® 5
We bring you the hottest in home theater, digital video, automobile security, and more.

DEPARTMENTS

PROTOTYPE 8
Explore new technologies—such as phone booths for divers, magnetic refrigerators, and computers that see.

SURVEYING THE DIGITAL DOMAIN ..... *Reid Goldsborough* 12
Learn how to stay savvy and stress-free while working with computers.

PEAK COMPUTING ..... *Ted Needleman* 15
Find out how it's easier than ever to start your own home-based wireless network.

COMPUTER BITS ..... *Peter Pietromonaco* 16
Continuing with the introduction of computer programming, this month we take a look at Visual Basic.

Q&A ..... *Dean Huster* 41
The Sultan of Solder bestows his wisdom and knowledge upon a multitude of questioners.

PIC-TRONICS ..... *TJ Byers* 46
In a constant effort to bring you the best of applied basic electronics, we offer a new column for users of PICs.

SERVICE CLINIC ..... *Sam Goldwasser* 51
You've already seen the "Alien Autopsy," but have you ever witnessed a postmortem on an AC adapter?

BASIC CIRCUITRY ..... *Charles Rakes* 55
The bastion of bench-top electronics brings the topic of timers to a conclusion.

AND MORE

EDITORIAL 2
LETTERS 3
YESTERDAY'S NEWS 4
NEW GEAR 19
NEW LITERATURE 21
POPTRONICS SHOPPER 59
ADVERTISING INDEX 80
FREE INFORMATION CARD 80A

Poptronics (ISSN 1526-3681) Published monthly by Gernsback Publications, Inc. 275-G Marcus Blvd., Hauppauge, NY 11788. Second-Class postage paid at Hauppauge, NY and at additional mailing offices. One-year, twelve issues, subscription rate U.S. and possessions $24.99, Canada $33.15 (includes G.S.T. Canadian Goods and Services Tax Registration No. R125166280), all other countries $33.99. Subscription orders payable in U.S. funds only, International Postal Money Order or check drawn on a U.S. bank. U.S. single copy price $4.99.
Copyright 2002 by Gernsback Publications, Inc. All rights reserved. Hands-on Electronics and Gizmo trademarks are registered in U.S. and Canada by Gernsback Publications, Inc. Poptronics trademark is registered in U.S. and Canada by Poptronix, Inc. and is licensed to Gernsback Publications, Inc. Printed in U.S.A.
Postmaster: Please send address changes to Poptronics, Subscription Dept., P.O. Box 459, Mount Morris, IL 61054-7629

A stamped self-addressed envelope must accompany all submitted manuscripts and/or artwork or photographs if their return is desired should they be rejected. We disclaim any responsibility for the loss or damage of manuscripts and/or artwork or photographs while in our possession or otherwise.

As a service to readers, Poptronics publishes available plans or information relating to newsworthy products, techniques, and scientific and technological developments. Because of possible variances in the quality and condition of materials and workmanship used by readers, Poptronics disclaims any responsibility for the safe and proper functioning of reader-built projects based upon or from plans or information published in this magazine.

www.americanradiohistory.com

Poptronics®

Larry Steckler, EHF, CET,
editor-in-chief and publisher

EDITORIAL DEPARTMENT
Chris La Morte, managing editor
Evelyn Rose, assistant editor
Maria Orlando, assistant editor

CONTRIBUTING EDITORS
Reid Goldsborough
Sam Goldwasser
Rudolf F. Graf, KA2CWL
Dean Huster
John Iovine
Ted Needleman
Peter Pietromonaco
Charles D. Rakes
Teri Scaduto
Mark Spiwak
William Sheets, K2MQJ

PRODUCTION DEPARTMENT
Kathy Campbell, production manager
Michele L. Musé, prepress specialist

ART DEPARTMENT
Russell C. Truelson, art director
Michele L. Musé, graphic artist

CIRCULATION DEPARTMENT
Gina Giuliano, circulation manager

REPRINT DEPARTMENT
Maria Menichetti, Reprint Bookstore x235

BUSINESS AND EDITORIAL OFFICES
Gernsback Publications, Inc.
275-G Marcus Blvd.
Hauppauge, NY 11788
M-F 8:30 AM - 4:30 PM EST
631-592-6720
Fax: **631-592-6723**
President: **Larry Steckler**
Vice-President: **Adria Coren**
Vice-President: **Ken Coren**

SUBSCRIPTION CUSTOMER SERVICE/ ORDER ENTRY
800-827-0383
7:30 AM - 8:30 PM EST

Advertising Sales Offices listed on page 80

Cover by Michele Lyn Musé

VISIT US ON THE INTERNET AT:
www.gernsback.com
or www.poptronics.com

Since some of the equipment and circuitry described in POPTRONICS may relate to or be covered by U.S. patents, POPTRONICS disclaims any liability for the infringement of such patents by the making, using, or selling of such equipment or circuitry, and suggests that anyone interested in such projects consult a patent attorney.

WHAT'S NEW?

Haven't we all been missing a touch of variety in our news media? To say that most media outlets have been concentrating on the same story would be a safe statement. The news I personally miss the most is science and technology news. The average person can go to the library or sit at home on the Internet and search through the same stale press releases and news features, but I remember when television and print would bring news of new inventions.

Two areas that need some updating are nanotechnology, and the closely related *Robofly* project. Most of the Web Portals that I browsed on this subject haven't updated these subjects in six months. It is hard to believe that both of these subjects have been stagnant for over half a year. No doubt they are sitting second and third fiddle to the multi-faceted fervor currently found in the cloning industry. When we last heard from the nanotech realm, scientists were wagering amongst each other that a *nanocomputer* would be created by 2011, and in turn this *nanocomputer* would power a *nanoassembler*, which would then set into motion an army of self-replicating *nanomachines*. And who can remember the hype behind *Robofly*? This little bugger was to be the size of a house fly and capable of flying around by flapping tiny Mylar wings. The prototype would be powered by a chemical engine that worked using gas emission, and would also feature video and olfactory sensors in order for "the Man" to vicariously see and sniff his way around.

Now here's the bitter irony. The media still claims to cover science and technology, yet the stories they run aren't truly categorized. Case in point, one popular Web Portal boasts a Technology category, as well as a Science category. The Technology category is an endless list of corporate acquisitions, legal battles, and goof-ball product endorsements. It almost reads like a stock trends report. There was no sign of *Robofly* anywhere. The Science category was equally barren of treasured content. There were a few "studies" that were obvious lobbyist ploys and pleas, and there was a slew of typical "evil cloning scientists versus the good cloning scientists" stories. Oh well, at least we can all still turn to **Poptronics**. So, if the six o'clock network news has left you nauseous, and the cable news is creeping you out, then perhaps its time to crack us open and immerse yourself in some electronics. We try to keep a variety within these pages you now hold in your hands. Hopefully the content will inspire, inform, and of course, entertain.

Please note the absence of two columns this month: "All About..." and "Amazing Science." Contributing Editors Rudolph Graf and William Sheets have just returned from separate vacations, and the three of us had the opportunity to discuss some exciting projects that are in the works at their North Country Radio lab. Author John Iovine will return, along with the conclusion of his Biped Robot. Now it's time to read and relax.

Tallyho,

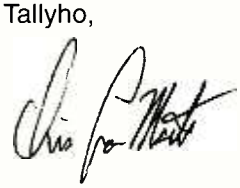

Chris La Morte
Managing Editor

www.americanradiohistory.com

LETTERS

mailto: letters@gernsback.com

Recalling The Late Hugo

I have been reading the article about Hugo Gernsback in the February issue of **Poptronics**. As a Gernsback Publications subscriber since **RadioCraft** (about 1950), this brought back memories of many of his articles and accomplishments. I do not remember hearing of his last invention (mentioned in the article) of a device to detect the charge on an electret, but I do remember the first time I heard of electrets.

Mr. Gernsback published an article, in the middle or late 1950s, about making an electret and giving a few uses for them. I had never heard of them and thought this article might be another April Fool's article, but it was serious. Now, of course, electrets are common, usually as the polarizing voltage source for capacitance microphones.

The first installment of "All About' is great. We can all use refreshers (or new coverage) of the basics. The subject of this month's column (power supplies) is quite timely for me. Just recently I was looking for the circuits of doublers, triplers, etc., and couldn't quickly find them. I am going to keep this month's "All About" for future reference. Sam Goldwasser's articles on switch-mode power supplies are also quite useful.

[From Another Letter] I see a couple of mistakes in schematics in the May issue of **Poptronics**. In Fig. 1 in the "Basic Circuitry" column on page 60, the collector of Q1 should go to the junction of the relay coil and D1, not to +12 volts. In Fig. 1 in the "Headphone Ambience Processor" on page 30, the positive terminal of the bridge rectifier is shown going to ground. It should go to pin 1 of U1 (the layout in Fig. 4 is correct).

BILL STILES
Hillsboro, MO

Mr. Stiles, as always thank you for your watchful eye, readership, and constructive criticism.—Editor

Digging Through The Archives

You might refer Al Williams, who wrote in your February issue expressing interest in a 6–8 MHz DDS frequency generator, to my two-part article "Making Waves With NCOs," which appeared in the December 1997 and January 1998 issues of *Circuit Cellar Ink*. There I described a bench-top instrument with a 1-Hz to 9.999-MHz output that used thumb-wheel frequency control. There is sufficient information in the article to enable the reader to adapt the hardware and software to give the desired 1-Hz resolution. (I believe the 10-bit HI572IDAC I used is now obsolete; the 12-bit HI573I is the nearest equivalent.)

Mr. Williams might also find my article "Getting Inside An NCO," in your October 2000 issue, of interest. Unfortunately, the TTL Technology I used there can't be pushed much beyond a 1-MHz output.

TOM NAPIER
North Wales, PA

Technology In A Box

As a devoted reader of **Poptronics**, I find myself looking forward to your "Gizmo" pages for new and exciting electronic gadgets. I am writing to tell you that your work is deeply appreciated and to also ask you if you had any type of catalog with all the Gizmos you have and are thinking of presenting. If not, do you know of anywhere I might get a catalog of all the latest electronic gizmos? I am a student in the Electronics field, and at the current time I don't have access to all the latest developments in technology—I want to make a good assessment into what branch of the electronics field to focus my studies. Any help you can give me would be sincerely appreciated.

FREDDY R. LAZZU
Mercer, PA

I'll let you in on an industry secret...we find our Gizmos and Gadgets via a host of press releases and catalogs. Here are two indispensable Web sites for lovers of electronic doohickeys—www.hammacher-schlemmer.com *and* www.sharperimage.com.
—Editor

A Case of Computer Excess

My first computer was a Texas Instruments 99/4A. Second was a Commodore 64. Next, an IBM with an 8088 processor—all three at one computer station. My current computer is a Pentium II. With no room left at the old computer station, the current computer is in the living room. But I am running out of space after adding a new printer, scanner, and new software. I still enjoy the old programs from the old computers. Is there a way to convert the programs from the T1 and Commodore to run on the Pentium II and other Pentium III or IV? I know that the disk drive format is different on the Commodore, and the T1 programs are on a plug-in cartridge.

LARRY DONALDSON
Logan, OH

I was just browsing some emulator Web sites that you might find helpful. Try these for the C64: www.c64games.com *and* www.computerbrains.com. *The Texas Instruments sites I've found useful are* www.99er.net *and* www.enter.net/~bsnyder/links.html. *Good luck.—Editor*

KEEP IN TOUCH

We appreciate letters from our readers. Comments, suggestions, questions, bouquets, or brickbats ... we want to hear from you and find out what you like and what you dislike. If there are projects you want to see or articles you want to submit—we want to know about them.

You can write via snail mail to:

Letters
Poptronics
275-G Marcus Blvd.
Hauppauge, NY 11788

Sending letters to our subscription address increases the time it takes to respond to your letters, as the mail is forwarded to our editorial offices.

Our e-mail address can be found at the top of the column.

Of course, e-mail is *fast.*

All of our columnists can be reached through the e-mail addresses at the head of each column.

And don't forget to visit our Web site: *www.gernsback.com.*

www.americanradiohistory.com

YESTERDAY'S NEWS

A PEEK INTO THE GERNSBACK ARCHIVES

1900

1910

1930

1940

1952

1960

1972

1980

1992

2000

Dateline: July 1952 (50 years ago)

Looking towards the future, this issue of **Radio Electronics** features articles on the era of the transistor and where it was heading, along with how to chose the right radio school and continue into the field. If you're preparing for more projects, there is also an article on how to fill parts requirements from one store—so stock up! In anticipation of the next decade, Hugo Gernsback predicts that there will be 53 million television sets in American homes by 1960.

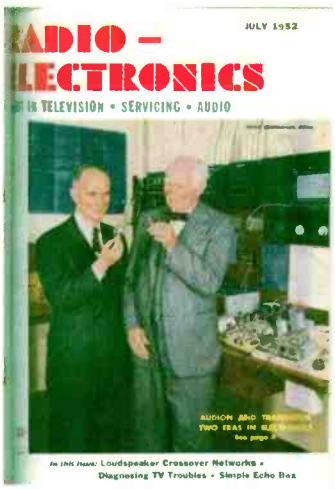

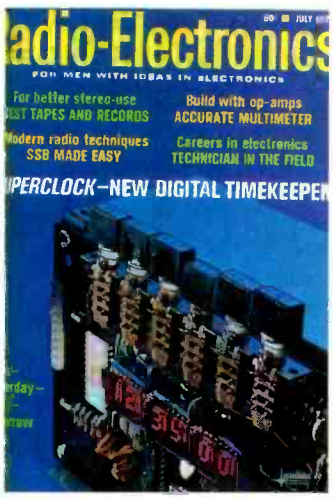

Dateline: July 1972 (30 years ago)

The average person today changes their job about 13 times throughout their life—exploring different fields. Just as people do today, readers of **Radio Electronics** looked for various technician roles as well. This issue features an article explaining the ins and outs, from radio/television/radar technicians to military applications and training. There is also a special analysis of video tape recorders—their history and future, along with where they fit into your home entertainment.

Dateline: July 1992 (10 years ago)

Today, many luxury cars house computers that provide directions and maps for travel. It was one decade ago that the GPS Navigation System was first introduced for personal and commercial navigation. This month's **Popular Electronics** discusses how it works, what its competition is, and what improvements need to be made. This issue also includes articles on how to build a portable 2-MHz frequency counter and a cordless telephone lock, as well as how to buy the best oscilloscopes, dollar for dollar.

www.americanradiohistory.com

GIZMO®

For more information go to page 80A

or e-mail: requests@berkshire-is.com

SD Audio Player/Recorder

Bypass your PC with the *SV-SR100* ultra-compact SD audio player ($399.95), which brings unprecedented convenience to SD audio entertainment. Just place a CD and an SD Memory Card in the unit and press a button to transfer music to the SD card in the AAC (Advanced Audio Codec) compression format. The device also plays back music recorded in MP3 and WMA formats and plays music directly from prerecorded CDs and CD-R/RW discs. Postage-stamp-sized SD cards, available in 8-, 16-, 32-, 64-, 256-, and 512-MB capacities, allow you to create personal music libraries containing hundreds of songs. You can use the keypad to enter song titles and artist names for easy access to your digital files.

Panasonic Consumer Electronics, One Panasonic Way, Secaucus, NJ 07094; 800-211-PANA; *www.panasonic.com*.

CIRCLE 50 ON FREE INFORMATION CARD

Sleek Sound

The *HKTS 10* home-theater speaker system ($649) won't clutter up your room with big, clunky speakers. It delivers realistic surround sound from four small satellites, a compact center-channel speaker, and a 150-watt powered subwoofer that can be tucked unobtrusively out of sight. The system reproduces movie soundtracks and music with accuracy, clarity, and dramatic bass impact. Designed for easy, flexible installation, the speakers can be placed on a shelf, mounted on a wall with the included brackets, or placed on optional stands. All necessary cables are provided.

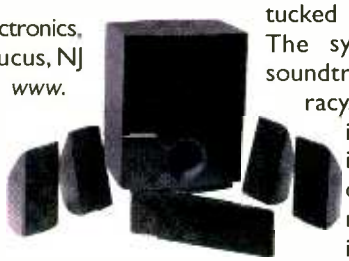

Harman Kardon, 250 Crossways Park Drive, Woodbury, NY 11797; 516-496-3400; *www.harmankardon.com*.

CIRCLE 51 ON FREE INFORMATION CARD

Mounting Magic

The *VP Elite* line of television wall and ceiling mounts ($21.99 to $119.99) feature contoured edges and a curved front profile, to blend flawlessly with most television styles. The wall mount support arm disappears behind the TV into an attractive mounting plate. Offered in black or white finish, the wall mounts can accommodate sets from 13 inches to 27 inches. The ceiling mounts, suitable for 19- to 27-inch sets, are easy to install without requiring attic access or reinforcement and can rotate a full 360 degrees. A matching VCR/DVD mount is also available.

Vantage Point, 10233 Palm Dr., Santa Fe Springs, CA 90670; 562-946-1718; *www.vanptc.com*.

CIRCLE 52 ON FREE INFORMATION CARD

Diamond Stereo

The *World Design Stereo's* ($269.95) unique diamond-shaped main unit features two independent CD drives with motorized doors that open at the touch of a button. The digital tuner stores 20 AM and 20 FM stations. The main unit can stand on a table or can be mounted on a wall. Adjustable pedestals are included, as are interchangeable speaker grilles in dark and medium blue. The system features an alarm clock, electronic equalizer presets, a sleep timer, and a remote control.

The Sharper Image (stores in 28 states and Washington, DC); P.O. Box 7031, San Francisco, CA 94120-9703; 800-344-4444; *www.sharperimage.com*.

CIRCLE 53 ON FREE INFORMATION CARD

Digital Video Converter

Want to exchange videotapes or DVDs with friends and relatives abroad? The *TR-1000Pro* ($1599) converts video to and from different TV systems, such as PAL, NTSC, and SECAM. The device features a complete video processor for picture improvement, a multisystem bar generator, and a built-in time-base corrector for maximum stability. Available in both desktop and rack-mount versions, it is aimed at video professionals, as well as high-tech consumers.

TenLab, 27346 Oak Summit Rd., Agoura Hills, CA 91301-3612; 818-706-8120; *www.tenlab.com*.

CIRCLE 54 ON FREE INFORMATION CARD

www.americanradiohistory.com

Direct Photo Printer

You can make high-quality color prints of images captured on Canon PowerShot digital cameras using the *Card Photo Printer CP-100* ($349). With all print settings made directly from the camera's LCD, the device provides a fast and simple way to make prints up to 4 × 6 inches. The translucent blue printer measures just 6.7 × 7 × 2.4 inches and weighs just over two pounds, and the optional battery pack allows you to make prints anywhere. Credit-card-sized prints take just 40 seconds, while 4 × 6-inch prints take about twice that long. A clear UV overcoat is applied for extended longevity. The printer can also make labels and photo stickers, and you can choose between bordered or borderless prints.

Canon U.S.A., Inc., One Canon Plaza, Lake Success, NY 11042; 800-OK-CANON; *www.usa.canon.com.*

CIRCLE 55 ON FREE INFORMATION CARD

Road Warriors

Combining the performance of separate components with the convenience of a point-source configuration, the *V-Mag 602* mobile speakers ($169/pair) are designed for direct drop-in replacement of factory-installed car speakers for improved performance. The speakers incorporate technical and material advances that include light and robust microcellular butadiene rubber surrounds that provide excellent linearity and are UV-resistant; Kapton voice-coil formers for increased power handling; low-mass magnesium-alloy cones for fast transient response; and ¾-inch magnesium composite dome tweeters for smooth high-frequency response.

Cerwin-Vega, 555 Easy St., Simi Valley, CA 93065-1805; 805-584-9332; *www.cerwin-vega.com*

CIRCLE 57 ON FREE INFORMATION CARD

Room-Rockin' MP3

Get room-rocking sound from your portable MP3 or CD player by connecting it to the *Octave speaker system* ($319), which consists of a compact subwoofer, two ultra-slim speakers, and a remote control. Dual Directional Output technology radiates sound from both the front and rear of the speakers, filling all four corners of the room equally with rich, undistorted sound.

Axyys Corporation, 9133 So. La Cienega Blvd., Suite 250, Inglewood, CA 90301; *www.axyys.com.*

CIRCLE 56 ON FREE INFORMATION CARD

Progressive-Scan DVD

The *UltraVision DV-P725U DVD player* ($189.95) features progressive-scan processing that deinterlaces a DVD's video content and produces a 480p output for a more film-like display. It sports a new industrial design and has a dual laser pickup that's compatible with DVD, DVD-R, VideoCD, CD, CD-R/RW, and MP3 playback. The player offers a front-panel shuttle dial, virtual surround sound, and a multi-brand remote control (pictured here).

Hitachi America Ltd.; 1855 Dornoch Court, San Diego, CA 92154; 800-HITACHI; *www.hitachi.com.*

CIRCLE 58 ON FREE INFORMATION CARD

Wrapped to Go

Designed to deter vehicle and airbag theft, the *Wrap* ($159.95) locks onto the steering wheel and provides three layers of protection: mechanical, audible, and visual. Built of unbreakable resin reinforced with a stainless-steel frame and equipped with a tubular seven-pin keyed locking system, the device limits steering-wheel movement with an anti-rotation arm. A motion sensor sets off a 110-dB siren, backed by LED warning lights and a flashing strobe.

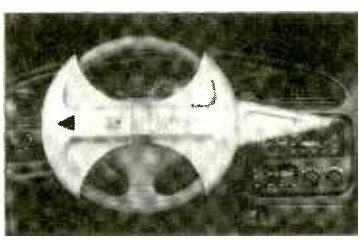

Blockit & Lockit Systems, 1211 Mullowney Ln., Billings, MT 59101; 888-656-6156; *www.wrap1.com.*

CIRCLE 59 ON FREE INFORMATION CARD

www.americanradiohistory.com

Palm GPS

Boasting a slim and lightweight design geared toward the mobile professional, the *Navman GPS m Series* ($199.95) is the first GPS device available for Palm's m500, m505, m105, and m125 handhelds. The package includes a GPS receiver, Rand McNally StreetFinder Deluxe Travel Navigation software, a vehicle mounting kit, and a vehicle power adapter. The helical antenna connects you to as many as 12 satellites, ensuring precise information on your location; and the software provides detailed street-level mapping for the United States (excluding Alaska), customizable maps, and address-to-address directions via the Internet. More than one million businesses, points of interest, and Mobil Travel Guide restaurant and hotel listings are included.

Navman USA, Inc., *www.navman.com*.

Single-Board Computer

The *OP6800 MiniCom* C-programmable operator interface and single-board computer ($249) offers Ethernet connectivity, plenty of industrialized I/O, and a graphic LCD/keypad. Its compact (4.5 × 3.6-inch) form factor makes it ideal for use in designs and areas with size constraints, and the device provides comprehensive integrated control, display, and networking capabilities via Internet/Ethernet or serial communications. (The non-Ethernet version costs $199).

Z-World; *www.zworld.com*.

Microphone Preamp

Because *the Model 401* high-performance microphone preamp ($183) was designed specifically to drive a computer sound card's line input, the output noise had to be kept very low compared to the line-in maximum signal level. With a dynamic range of nearly 70 dB at the full gain of 60 dB, the unit achieved the designers' goal. The preamp is useful in any application where very low noise gain is needed to condition a low-impedance sensor's output. The internal rechargeable batteries provide complete isolation from the power mains, and the cast-aluminum enclosure minimizes unwanted interference.

TDL Technology, Inc.; *www.zianet.com/tdl*.

DVD Recordables

Fujifilm's new lineup of recordable DVD media includes *DVD-RAM, DVD-RW, DVD+RW, DVD-R,* and *DVD-R (for authoring) discs*. DVD-RAMs are available in single-sided 4.7GB (120 min) capacity with and without cartridge, and double-sided 9.4GB (240 min) with cartridge. Compatible with DVD-RW and DVD+RW recorders respectively, the DVD-RW and DVD+RW discs each offer 4.7GB data storage capacity for up to 120 minutes of recording time. The write-once DVD-R discs also offer 4.7 GB and are compatible with general-use DVD-R drives and recorders. The DVD-R (for authoring) discs, for authoring DVD-R drives and recorders, have the same capacity and are intended for mastering and post-production recording applications.

Fuji Photo Film U.S.A., *www.fujifilm.com*.

Strongman PDA Case

Keep your PDA safe and sound with the *Strongman PLT-8* ($24.95). Made of leather-like Koskin material and designed to secure a variety of PDA brands and sizes, the case features the durable molded plastic Strongman Attachment System, which holds and protects a PDA without Velcro or annoying fabric straps. The sleek, stylish case features business card slots, a stylus holder, and Post-It notes secured by a convenient elastic strap.

Case Logic; *www.caselogic.com*.

Gizmo is published by Gernsback Publications, Inc., 275-G Marcus Blvd., Hauppauge, NY 11788. Senior Writers: Christopher Scott and Teri Scaduto. *Copyright 2002 by Gernsback Publications, Inc. Gizmo is a registered trademark. All rights reserved.*

www.americanradiohistory.com

Business Buzz

MICRO MEDICAL CABLE
Calmot Wire & Cable has introduced an insulated, ultraflexible wire only 0.005 inches in diameter. The company manufactures multiples of the individual conductors into some of the smallest cables available today. Used extensively in the medical market, the cables are custom-made as either reusable or disposable types. They are offered in a variety of conductor and insulation materials, including non-electrical components. Manufacturing tolerances are maintained through laser gauging and digital micrometer measuring devices.

DVD-AUDIO TAKES TO THE ROAD
At the SAE-CEA Digital Car Conference in Detroit, Panasonic unveiled its first mobile DVD-audio systems—both aftermarket and factory installed. DVD-Audio is advanced digital recording format featuring high-resolution, multi-channel sound with as many as six channels, for enveloping surround sound. DVD-Audio players can also play back DVD video discs and CDs. Mounted for display in a Cadillac Seville, they featured a new generation of DVD-ready speakers, multi-channel amplifiers and in-dash receivers, and were accompanied by a wealth of new software titles from leading music companies.

SECURE MEMPLUG ADAPTER
The MemPlug SD/MMC from Portable Innovation Technology (*www.pitech.com*) is the first Security Digital/MultiMedia Memory Springboard module for the Handspring Visor that provides up to 256MB storage using a SD/MMC memory card. It comes with a built-in vibrating alarm, a feature not provided on the handheld unit. The latest in a growing list of SD/MMC adapters, it comes with seven built-in applications and can increase the Visor's memory by hundreds of megabytes. With MemPlug, users can view JPEG images recorded on a compatible digital camera and directly execute Palm read-only applications and databases stored on a SD/MMC card. It allows instant memory backup at the touch of a button, reading of entire e-books, and playback of up to an hour of 16-bit gMovie color video using a 512MB SD/MMC card.

Don't Leave Home for Groceries

Everyone has picked up the phone to order a pizza delivery. Some of us have even begun using the Internet to order rental DVDs. Now Philips has introduced a device that takes that concept a big step forward, allowing consumers to order their groceries, for delivery or pickup, from the comfort of their homes.

The HSD4000 Home Shopping device is a handheld unit that lets you compile a digital shopping list of grocery items by simply scanning the bar codes of the items directly from the pantry or fridge. Then, via an Internet connection, it downloads the list to a local retailer.

Time-pressed shoppers have a couple of other options. They can do most of their scanning at home. Think how easy it would be to scan an empty container before throwing it out—and how difficult to train the kids to do so. The handheld device can be carried from room to room, allowing you to check the bathroom to see if you're low on toilet paper or toothpaste, the laundry for detergent and bleach, and the pantry for dry goods. Then they could stop at the store to add other items and download the entire list. Or they can walk briskly up and down the store aisles, unencumbered by a cart, and scan items for later delivery.

Philips Homeshopper is a hand-held device that lets you do your grocery shopping without leaving home.

Designed for ease of use, the device offers a touch-screen display, bar-code scanner, and docking station for charging the battery pack. No technological know-how is required on the part of the user. The Homeshopper can store up to 30,000 bar codes and product descriptions. It can be used to scan coupons and even nutritional information. After the product is scanned, the device displays the description and price.

"This e-pliance has the potential to change the entire grocery shopping experience for the consumer," commented Wim Lemay, Business Development manager at Philips Components. "Philips is ready to supply grocery chains with this innovative product, and we are already in discussions with a number of retail chains—our research has shown that consumers will adopt this application and we want to get it to them through the retailers as soon as possible." PT

Internet Voting

The 2000 presidential election brought demands for drastic changes in the election process. One commonly voiced suggestion was "If I can safely purchase items over the Internet, why can't I use the Internet for voting?"

The Georgia Tech Research Institute's (GTRI) Internet Voting Research Team is now studying the technical and social issues related to Internet voting. At a recent workshop hosted by the team, participants from academia, government, and industry agreed that Internet voting could provide a more convenient, efficient, and accurate elections process—and also concluded that its widespread use is still many years away.

These experts expect that Internet voting will occur in phases. They predict that military personnel will be the first to cast absentee ballots via the 'Net, probably within the next few years. Internet voting will be adopted by a few states by 2008. Next, they forecast, those

www.americanradiohistory.com

TYPE

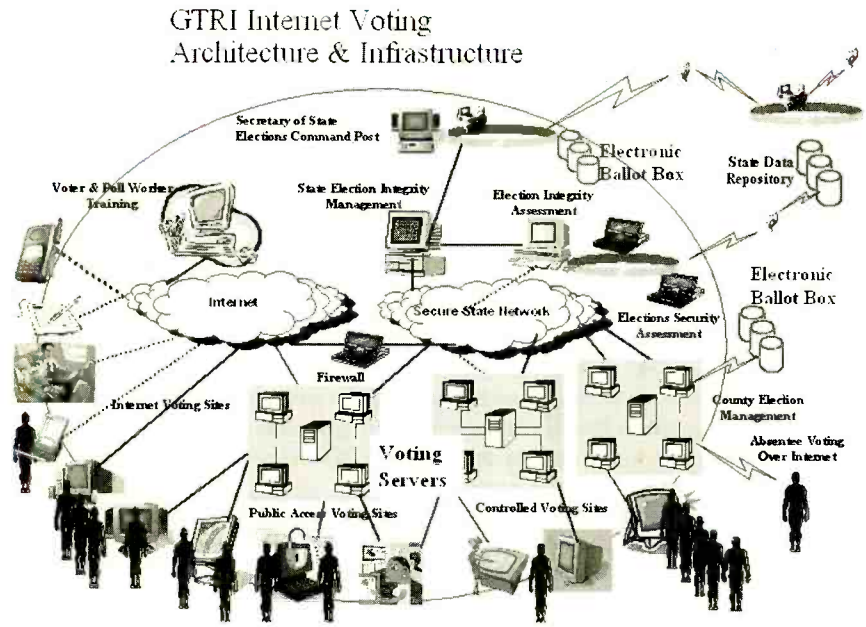

The switch to Internet voting would have widespread social, political, and judicial effects.

states that already use only mail-in ballots (such as Oregon) will be the first to adopt Internet voting by 2012.

The GTRI team is working to re-engineer the voting part of the election process, and to fully understand the impact of such change on the other parts of the process, including the training of poll workers and the tallying of votes. Bob Simpson, a GTRI principal research scientist, notes, "... things are more complicated than they appear on the surface."

Tasks include the development of data models for information systems, privacy techniques to ensure secret balloting, and a test bed for Internet voting experiments. One technical issue is the need for common hardware, software, networking, authentication procedures, training systems, and support tools. A major hurdle, of course, is cost. Today, elections are not really that expensive because the costs have been driven down over time. Counties use the same equipment for an average of 20 years. Computers, however, become obsolete so quickly.

One of the primary social-science issues related to Internet voting is the "Digital Divide" that separates those who have Internet access from home or work and those who don't. In the future, this could become a divide between those with broadband access and those who still use dial-ups. One solution could be the capability to cast ballots at ATMs and at kiosks in post offices and malls. More complicated is the question as to whether all citizens would be comfortable with Internet voting.

Yet another social-science issue being researched at GTRI is how Internet voting will affect voter turnout. Will different segments of the population turn out differently? Could this new voting technology possibly change the composition of the voting population, thus significantly affecting the outcome?

Internet voting could make it easier for seniors and the disabled. Besides bringing the "voting machine" to the voter, it offers the potential to satisfy individual needs and preferences. For instance, visually impaired voters could increase the font size on their ballots. "It's not uncommon for disabled persons to have to give up their secret ballot to be able to participate," said Simpson. "Also, any separate equipment for disabled voters is usually less maintained

Research Notes

CHEAP CHIP TALK

Engineers at The Johns Hopkins University have speeded up the way microchips "talk" to each other. The research team uses microchips in which silicon is layered onto thin slices of synthetic sapphire, a cost-effective material that allows light to pass through it. A signal that originates in a wire is transformed into light and beamed through the transparent sapphire substrate via a tiny laser. Microlenses and other optical components collect the light beam and guide it to another place on the microchip or, using an optical fiber, to another chip. The light then enters a high-speed optical receiver circuit that transforms the stream of photons into electrons that travel through electrical wires connected to other computer components. Such signals could travel 100 times faster than those moving along a metal wire.

THE FLY ON THE WALL

Ron Miles, professor of Mechanical Engineering at Binghamton University, is developing the world's smallest microphone, modeled on a tiny structure in a fly's ears. His "ormiaphones," named for the *Ormia ochracea* fly, is expected to help millions of Americans with hearing loss. Miles' design also precisely pinpoints sounds—something that most hearing aids cannot do. Possible military applications include a "smart dust" that could detect sounds and determine the direction of troop or equipment movements.

NEXT-GENERATION DVD

Nine electronics manufacturers—Hitachi, LG Electronics, Matsushita, Pioneer, Philips, Samsung, Sharp, Sony, and Thomson—have unveiled the next generation of DVDs. Called the Blu-ray Disc, it will store more than 13 hours of video, more than 50 times today's DVDs. The discs allow the recording, rewriting and playback of up to 27 gigabytes of data on a single-sided, single-layer disc using a short wavelength blue-violet laser. Because the Blu-ray Disc uses standard MPEG-2 compression, the disc can record high-definition video while maintaining other data received with the video.

www.americanradiohistory.com

and efficient. Internet voting would make it possible for them to participate like other voters."

Legal issues abound as well. Because Internet voting must comply with the *Voting Rights Act*, as well as other state and federal voting laws, extensive judicial review would be required. Undoubtedly, some laws would have to be changed.

GTRI researchers hope that more studies of Internet voting will get under way when government and/or private funding becomes available. Designers of Internet voting systems must also consider the needs of election officials, candidates, elected officials, and poll workers.—**by Bill Siuru** PT

➤Emergency Calls

The events of September 11 revealed some problems in communications systems in both New York City and Washington, D.C. First, with so many people trying to use cell phones at the same time, some emergency workers were unable to communicate with each other. Second, the concrete and steel that comprise tall buildings cause radio interference, preventing fire commanders from reaching firefighters on upper floors of the Towers.

VoiceStream Wireless has unveiled a new cellular phone system to tackle the first problem. The priority-access system would ensure that emergency workers would be able to complete calls during an emergency. Certain officials would have cell phones with calling priority—making it somewhat more difficult for you or me to get our calls through, but assuring that 5000 top officials in New York and Washington will be in the clear, using phones that automatically receive priority status. Eventually, once the technology is in place, those officials will be able to get priority using regular cell phones by dialing a special prefix.

Where does that leave the average Joe? VoiceStream says the effect on his ability to make a connection during a crisis will be "nominal." The FCC, which approved VoiceStream's priority-calling system application on April 3, did not require the company to notify its customers of the possibility of decreased service during an emergency.

As for radio communications in the approximately 600 high-rises dotting New York's skyline, the NYFD has asked the Federal Emergency Management System for $60 million dollars to outfit the buildings with repeaters. These radio "boosters" would provide clear channels of communication in buildings over 20 stories tall, and would benefit police and EMS teams as well as firefighters.

Ironically, the Twin Towers were outfitted with repeaters, as were many of the rescue vehicles that responded to the scene. The devices in the buildings were destroyed during the initial attacks, and most of the vehicles were crushed by falling debris. PT

Cool Magnetic Technology

We've all got magnets *on* our refrigerators, holding up photos, kiddy art, recipes, and reminders. Now, some of us may be getting magnets *in* our refrigerators, thanks to a new technology developed by the U.S. Department of Energy's Ames Laboratory and Astronautics Corporation of America. The Madison, Wisconsin-based company recently demonstrated a prototype of their latest magnetic refrigerator, which puts to practical use the magnetocaloric effect—the striking ability of certain metals to become hot when magnetized and cool when demagnetized.

Today's gas-compression refrigerators repeatedly compress and expand a gas. As it expands, its temperature drops, and the chilled gas is circulated around an insulated compartment to keep the food cool. Traditional cooling systems are inefficient, wasting energy and emitting gases that have been linked to global warning. Their magnetic counterparts, which, in effect work by continuously switching on and off a magnetic field, would be more efficient and environmentally friendly—and would run virtually silently.

The concept of magnetic refrigeration isn't new. It's been used in laboratories to cool objects to within one degree above absolute zero. However, such magnetic cooling devices depended on superconducting magnets (which must themselves be cooled to very low temperatures) and expensive rare-earth compounds—neither of which was practical for commercial applications.

The Ames/Astronautics team tackled both problems. Ames scientist Karl Gschneider developed an efficient and inexpensive alternative compound using gadolinium (a metal used in VCR recording heads), and Astronautics researchers designed a prototype using a permanent magnet that creates a field nearly as strong as that generated by a superconducting magnet. They expect these innovations to make magnetic refrigeration competitive with conventional gas-compression technology.

Besides higher efficiency, cost-savings, and noise-reduction, magnetic refrigeration eliminates, in many cases, the hazardous materials used for heat transfer. Instead of CFCs or ammonia, the magnetic unit uses water as a heat-transfer medium for the refrigeration temperature range and a water-antifreeze mixture to reach below freezing.

Commercial applications could include large-scale refrigeration, food processing, heating, and air conditioning; liquor distilling; grain drying; and waste-separation and -treatment systems. Further development could lead to the production of cheap liquid hydrogen, an environmentally safe alternative fuel source. Because magnetic refrigeration can efficiently span the large temperature difference needed to produce liquid hydrogen, even a small improvement in efficiency could result in tremendous energy savings. PT

Visionary Computers

Researchers at UCLA's Henry Samueli School of Engineering and Applied Science are working to develop computers with human-like "eyesight." Brain surgery, endoscopies, and other medical procedures could be performed

www.americanradiohistory.com

faster and more safely using computers that could see as well as people can.

The research team is examining how people use vision to interact with others and with their surroundings. They are using that information to design systems that will allow computers to perform in similar ways. "We use senses to build models of the world around us that allow us to walk through our environment and interact with it safely," said Stefano Soatto, assistant professor at UCLA's computer science department and head of the UCLA Vision Lab. "I want a machine to be able to do the same thing."

In the rapidly growing field of image-guided surgery, doctors use sophisticated imaging technology to help them perform surgical operations. One such technology merges multiple images to create a 3D map of a patient's brain, for instance. However, the images are often as much as a day old, and if the patient's condition changes, or if the procedure itself alters conditions, the images become useless. There are only a handful of MRI machines in use around the world that provide updated images during surgery—and these still require people to grip or manipulate the surgical tools.

Soatto believes that a computer that can understand and act within its environment can recreate and constantly update a 3D model of the brain—and then can use what it "sees" to perform tasks previously done by surgeons. Instead of a person interpreting visual data from the computer to then manually guide a catheter through the body or gather tissue samples, the computer could perform the entire task. Such "virtual surgeons," endowed with the ability to study images as they change over time and use that information to perform assigned tasks ("dynamic vision"), would eliminate the need for doctors to travel from afar to perform operations.

Soatto explains that "the world has certain physical properties—shape, motion, material properties of objects, and so forth. Humans have developed, over the course of evolution, a particular way of representing their environment that has been crucial for humans to survive—detecting prey, recognizing familiar objects, for example."

Computers can also be made to interpret the physical world and interact with it, whether that environment is a nuclear reactor or the human body. To interact with a changing environment, a computer needs to gain information about certain measurable spatial properties, including shape, motion, distances, and angles. By taking photographs from many points of view, a three-dimensional representation of the world can be created. Such a machine could act immediately based on what it sees, rather than later, after the data has been analyzed by people. This would allow the computer to do more than just preassigned tasks based on previously gathered data. It could continuously update its knowledge of its surroundings and truly interact with a changing world. PT

LynX-10
HOME AUTOMATION KIT
· Software Included
· Use Existing Wiring
· Simple Inexpensive
1-800-928-5299 www.marrickltd.com

Calling Diver Dan

France Telecom R&D and French communications company Amphicom have invented the first system to allow telephone communications with divers working underwater. The easy-to-use system ensures a clear connection from a fixed or wireless phone to a person underwater at any depth. Consisting of a buoy fitted with a GSM phone relay that handles two-way communications with an underwater terminal, it resembles a personal underwater phone booth. The terminal is wired to the buoy and is equipped with a phone-like dial pad, a special mouthpiece, and a light and a buzzer to alert divers to incoming calls.

The parties are able to talk because of the ability of human bones to conduct sound under water. The sound wave from the surface travels through the system to the mouthpiece. The diver bites down on the mouthpiece and pushes a button to "unhook the handset." Sound vibrations are transmitted to the ear via the skull, which acts as a resonance chamber. The diver is able to clearly hear the caller and to talk back, in half duplex mode. Using the dialing pad, the diver can also place outgoing calls.

The system significantly improves safety for professionals working underwater. It was tested by archeologists at the Alexandrine Research Center in Egypt, which is in charge of underwater excavations at the presumed site of the Alexandria Lighthouse. Direct, instantaneous communications between divers and excavation managers facilitated interactive research, eliminated the need for frequent returns to the surface (and the risks of decompression), and reduced the loss of information inherent in diving such as directional problems on the sea floor and forgetfulness.

Frederic Tenron, France Telecom R&D engineer (left) presents the company's submarine telephone system to Jean-Yves Empereur of the Alexandrine Research Center at Alexandria, Egypt. Empereur's archeological team will use the system to aid in their search for the ancient Alexandria Lighthouse.

The underwater communications system, which is expected to be commercially available by the end of the year, has applications in scientific research, shipyards, oilrig platforms, salvage operations, and civil security. France Telecom researchers are exploring ways to eliminate the wire link between the buoy and the submerged terminal, using ultrasound waves or weak electrical currents, so that divers can be totally independent and members of a team diving in the same area can call each other. PT

www.americanradiohistory.com

REID GOLDSBOROUGH

mailto: digitaldomain@gernsback.com

MASTERING THE PC DOMAIN

Research has shown that those who are least comfortable with computer technology have the least knowledge of it. Those who have undergone training or taught themselves are less stressed and better able to take advantage of PCs—makes sense.

Even experts don't know all the tricks. What follows are ways—some commonsensical, some not—that beginners as well as advanced users can bone up on personal computers.

EDUCATE YOURSELF

Read the manual. Hardware and software manuals are both better and shorter than they used to be. Most people still don't read them. Taking a few minutes to at least browse through the manual can save a lot of time later by familiarizing yourself with a product's core features.

Go through the tutorial. Many programs include teaching aids that hold your hand in learning basic procedures. Another option is to buy a third-party tutorial on video or CD-ROM. Video tutorials are better if you're a beginner and uncomfortable in using a computer in the first place. CD-ROM tutorials let you interactively try out what you're learning. Top tutorial makers include KeyStone Learning Systems (800-748-4838; *www.keystonelearning.com*) and MacAcademy/Windows Academy (800-527-1914; *www.macademy.com*).

Use the online help system. Hitting F1 or pulling down the Help menu provides quick help. Some software companies offer "intelligent agents" that anticipate help you may need in carrying out tasks. While useful for beginners, these help assistants can grate over time. Fortunately, you can turn them off. Using a program's help system manually by browsing through its contents or launching a targeted search can be a great way to get up to speed on your terms.

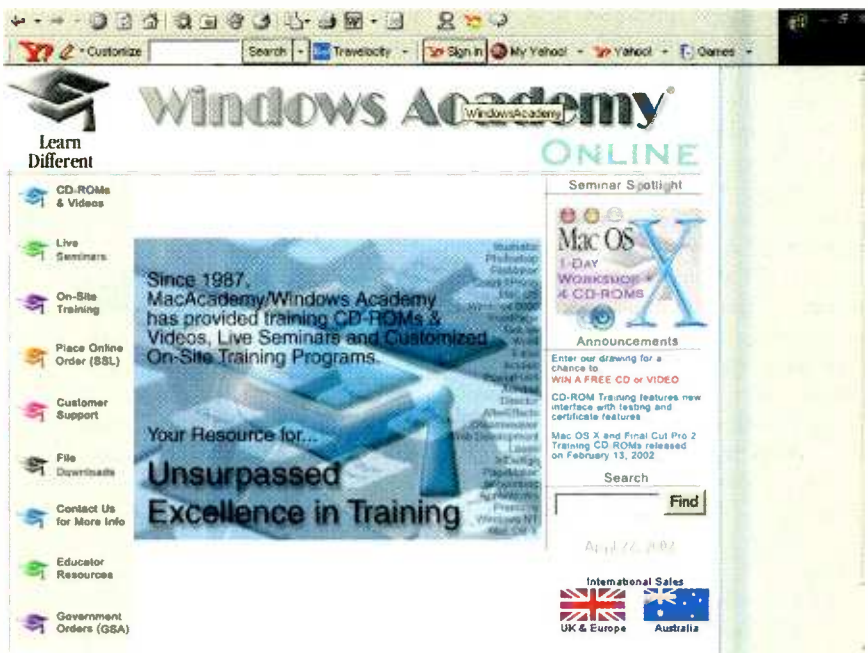

Only in a virtual world can two behemoths such as Macintosh and Windows coexist. This academy Website is designed to convert even the most technologically inept subjects into full-fledged computer users.

Check out the manufacturer's Web site. You can often find answers there to commonly asked questions along with other tips, bug fixes, and software downloads. Web sites are usually listed in manuals or as part of the help system. You can also find links to the sites of thousands of computer manufacturers at the Guide to Computer Vendors (*http://guide.sbanetweb.com*).

Explore third-party Web sites. You'll find free advice and software updates at sites such as Paul Thrust's SuperSite for Windows (*www.winsuperpersite.com*), Macintosh Watering Hole (*http://mac.map.com*), and Internet 101.org (*www.internet101.org*). Yahoo lists other popular computer help sites in its Technical Guides and Support section (*http://dir.yahoo.com/Computers_and_Internet/Technical_Guides_and_Support*).

Subscribe to a computer magazine. Magazines offer lots of well-written, well-organized tips, reviews, and commentary for beginners and experts alike. Sample those that look interesting by picking up newsstand copies. There are a range of different types out there. If you find one that talks to you, subscribe. Some computer magazines are a bit too fervid in enticing you to buy the latest and the greatest, though it's not difficult to filter this out.

Buy a computer book. If your computer came with its manuals on disk and you'd like something more tangible, or if you're dissatisfied with the quality of an existing manual, a computer book can be a good solution. Some are written for beginners, others

www.americanradiohistory.com

for advanced users. Browse through any book before you buy it. Some computer books are put together hastily, so they can be published at the same time a program is released.

Take a class. Being among others, asking questions, and listening to the answers to other questions can aid the learning process. Classes are offered through local Ys, high school evening programs, community colleges, universities, computer stores, and computer training organizations. The "Computers-Training" section of your local Yellow Pages has particulars.

Hire a tutor. One-on-one training is more expensive than classroom training, but the personal attention can be worth it. Personal recommendations are best. Tutors are also listed under "Computers-Training" in the Yellow Pages. You can also find a tutor by contacting the Independent Computer Consultants Association (800-774-4222). At the group's Web site (*www.icca.org*), you can search for tutors by geographic area and expertise.

Join a computer user group. These volunteer groups abide by the principle, "Users helping users." User groups typically meet once a month, and members or sometimes guests give presentations on new products or how to best use existing products. During the rest of the month, members often volunteer to answer questions by phone or e-mail from fellow members. You can search for a user group near you at the Web site of the Association of Personal Computer User Groups (*http://database.apcug.org/database/loclist.asp*).

Personal computers can be amazing tools in helping you be efficient and productive. The key to making a PC work for you is learning how to best take advantage of it.

THE POWER OF THE INTERNET

Once you are familiar with the PC, there is no doubt you will become an avid user of the Internet. Mastering the navigation of the World Wide Web will most likely have a profound affect on your life.

We active online users like to think of ourselves as savvy, hip, and influential. We have access to the latest information technology, and more importantly, know how to use it to its full potential. Sure, when we take things to an extreme, we become nerds, isolated from other spheres of life. Used in perspective, PCs and the Internet are empowering. Just how empowering? Both more so and less so than you might think.

Through their skillful use of communications, the 11 million heavy online users in the U.S. influence the buying decisions of 155 million consumers both online and offline, according to research by Burson-Marsteller, a public relations firm headquartered in New York City. The company describes these active Internetters as opinion-leaders and has coined a name for them: "e-fluentials."

"An e-fluential is the rock that starts the ripple," says Leslie Gaines-Ross, the company's chief knowledge officer and architect of its research. "Each one communicates with an average of 14 people, so word travels in ever-widening circles, growing exponentially with each successive wave."

THE UPS AND DOWNS OF ELECTRONIC COMMUNICATION

Burson-Marsteller's research points to the importance of companies maintaining an easy-to-use, continually updated Web site and being responsive to e-mail. "Remarkably few companies respond very well or very often," she says.

Despite the advent of upstart tools such as instant messaging, e-mail is still the most widely used electronic communications medium. How influential is it? Not very. You'll likely get more satisfaction using a more traditional medium.

Say you're having a problem with a new product you just bought. You could send the company an e-mail message, spelling out your gripe. Or you could visit a "grievance site" such as PlanetFeedback, at *www.planetfeedback.com*, or Complaints.com, at *www.complaints.com*. These sites typically post your complaint to their site and forward it via e-mail to the company that made the product.

Too often, however, when a company receives your complaint via e-mail, you'll just receive an impersonal, canned e-mail message in response.

Similarly, don't expect to reach a human being when e-mailing your senator or representative if you have a gripe or would like to communicate your views about an issue. Sometimes your e-mail isn't even acknowledged, and when it is, the acknowledgement is typically automated and canned.

The reasons are clear. E-mail is so easy to send, and so easy to send in quantity, that companies and congressional offices alike are inundated with it. With e-mail, it's also easy to hide or fake who you are. For these reasons, some congressional offices have stopped disclosing e-mail addresses to the public.

Nonetheless, the Web sites of both the U.S. Senate and House of Representatives let you quickly locate contact information for your elected representatives, at *www.senate.gov/contacting* and *www.house.gov/writerep* respectively.

If you want a response, you're often better off using a slower and less efficient communications medium—the Postal Service. (Recent anthrax concerns have caused slowdowns in mail to Washington, DC, so it can be faster to send mail to local congressional offices.) Though you still may receive only a canned response, chances are better that someone will actually read your words.

POINT AND CLICK

Association of Personal Computer User Groups
http://database.apcug.org/database/loclist.asp

Complaints.com
www.complaints.com

Guide to Computer Vendors
http://guide.sbanetweb.com

Independent Computer Consultants Association
www.icca.org

KeyStone Learning Systems
www.keystonelearning.com

MacAcademy/Windows Academy
www.macacademy.com

Macintosh Watering Hole
http://mac.map.com

Paul Thrust's SuperSite for Windows
www.winsupersite.com

PlanetFeedback
www.planetfeedback.com

U.S. Congress
www.house.gov/writerep
www.senate.gov/contacting

www.americanradiohistory.com

STATING YOUR VIEWS VIA E-MAIL

Trying to leverage information technology, many congressional offices do allow you to communicate by filling out forms at the legislator's Web site, a process that's only slightly slower than sending e-mail.

Sen. Arlen Specter (R - PA) is one of a number of politicians who've come up with a fairly balanced approach. If you send him e-mail, you'll get back an auto-reply, though an impersonal one thanking you for taking the time to write.

Your views are then forwarded to the legislative correspondent who deals with the issue you've written about, according to Bill Reynolds, Specter's communications director. "We look at this information as a tally of how constituents feel about particular issues," he says.

In the auto-reply from Specter, you're also directed to the senator's Web site if you want a personal reply or more information. There, as long as you provide your address, you can fill out a form stating your views about one of 35 different issues, from abortion to veterans' affairs. Knowing you are who you say you are, a legislative correspondent responsible for that issue can contact you via e-mail, postal mail, or telephone.

To be most empowering, information technology needs to be used responsibly. Senders need to use the technology, not abuse it. And recipients need to take seriously the messages others send, which at the very least, means reading them.

Reid Goldsborough is a syndicated columnist and author of the book *Straight Talk About the Information Superhighway*. He can be reached at reidgold@netaxs.com or *www.netaxs.com/~reidgold/column*. P

ELECTRONIC GAMES

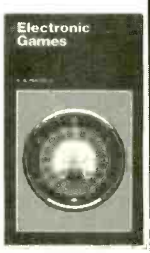

BP69—A number of interesting electronic game projects using IC's are presented. Includes 19 different projects ranging from a simple coin flipper, to a competitive reaction game, to electronic roulette, a combination lock game, a game timer and more. To order BP69 send **$4.99 clearance (includes s&h)** in the US and Canada to **Electronic Technology Today Inc., P.O. Box 240, Massapequa Park, NY 11762-0240.** US funds only. Use US bank check or International Money Order. Allow 6-8 weeks for delivery. MA07

Poptronics REPRINT BOOKSTORE

☐ **229** Popular Electronics (1999 back issues) **$5.00**
Write in Issues desired _____

☐ **228** Popular Electronics (1998 back issues) **$5.00**
Write in Issues desired _____

☐ **227** Popular Electronics (1997 back issues) **$5.00**
Write in Issues desired _____

☐ **226** Popular Electronics (1996 back issues) **$5.00**
Write in Issues desired _____

☐ **225** Popular Electronics (1995 back issues) **$5.00**
Write in Issues desired _____

☐ **EH96** Experimenters Handbook (1996) **$5.00**

☐ **EH95S** Experimenters Handbook Summer Edition (1995) **$5.00**

☐ **EH94S** Experimenters Handbook Summer Edition (1994) **$5.00**

☐ **EH94W** Experimenters Handbook Winter Edition (1994) **$5.00**

☐ **EH94** Experimenters Handbook (1994) **$5.00**

☐ **EH93** Experimenters Handbook (1993) **$5.00**

☐ **HH95S** Hobbyists Handbook Spring Edition (1995) **$5.00**

☐ **HH95F** Hobbyists Handbook Fall Edition (1995) **$5.00**

☐ **HH94S** Hobbyists Handbook Spring Edition (1994) **$5.00**

☐ **HH94F** Hobbyists Handbook Fall Edition (1994) **$5.00**

☐ **HH93** Hobbyists Handbook (1993) **$5.00**

☐ **HISTORY** Crystal Radio History, Fundamentals & Design **$10.95**

☐ **XTAL** Crystal Set Handbook **$10.95**

☐ **XTALPRO** Crystal Set Projects **$14.95**

☐ **XTALBLD** Crystal Set Building **$15.95**

☐ **POP96** POPtronix Hobbyist Handbook (1996) **$5.00**

☐ **POP97** POPtronix Exper Handbook (1997) **$5.00**

☐ **Radiocraft** 1993 Projects for Hobbyists **$5.00**

☐ **219** Electronics Now (1999 back issues) **$5.00**
Write in Issues desired _____

☐ **218** Electronics Now (1998 back issues) **$5.00**
Write in Issues desired _____

☐ **217** Electronics Now (1997 back issues) **$5.00**
Write in Issues desired _____

☐ **216** Electronics Now (1996 back issues) **$5.00**
Write in Issues desired _____

☐ **215** Electronics Now (1995 back issues) **$5.00**
Write in Issues desired _____

REPRINTS **REPRINTS**

☐ **174** Electronics Cartoons (The Best of) **$1.99**

☐ **173** From Not-Working to Networking Troubleshooting Local-Area Networks **$2.99**

☐ **170** High-Voltage Project for Fun and Science Book 1 **$2.99**

☐ **170A** High-Voltage Projects for Fun and Science Book 2 **$2.99**

☐ **169** Think Tank (133 Circuits) **$1.99**

☐ **169A** Think Tank Vol. 2 **$1.99**

☐ **168** Fact Cards (#34-66) **$1.99**

☐ **168C** Fact Cards (#67-99) **$1.99**

☐ **168D** Fact Cards (#100-132) **$1.99**

☐ **167** Designing With IC's **$2.99**

☐ **166** Collected Works of Mohammed Ullyses Fips (62 pages, April Fools Collection) **$6.99**

☐ **165** How to Repair CD Disc Players **$2.99**

☐ **164** Modern Electrics (April 1908) **$1.99**

☐ **160** New Ideas - 42 Circuits **$1.99**

☐ **159** Low Frequency Receiving Techniques Building and Using VLF Antennas **$2.99**

☐ **158** Electro Importing Co. Catalog (Circa 1918) **$2.99**

☐ **157** All About Kits **$1.99**

☐ **156** How To Make PC Boards **$1.99**

☐ **154** How To Repair VCR's **$1.99**

To order any of the items indicated above, check off the ones you want. Complete the order form below, include your payment, check or money order (DO NOT SEND CASH), payable to and mail to Claggk Inc., Reprint Department,P.O. Box 12162, Hauppauge, NY 11788.

Please allow 4-6 weeks for delivery. No COD's!

To place a credit card by phone, Visa Mastercard or Discover only. You can also order and pay by e-mail. Contact Claggk@gernsback.com for details.

CALL: 631-592-6721

To use your Visa, Mastercard or Discover, complete the following:

Bill my ☐ **Visa** ☐ **Mastercard** ☐ **Discover**

Card No. _____

Exp. Date _____

Signature _____

MAIL TO: Claggk Inc.
Reprint Bookstore,P.O. Box 12162, Hauppauge, NY 11788.

All payments must be in U.S. funds

SHIPPING CHARGES IN USA & CANADA

Up to $5.00	$2.00	$30.01 to 40.00	$6.00
$5.01 to $10.00	$3.00	$40.01 to 50.00	$7.00
$10.01 to 20.00	$4.00	$50.01 and above	$8.50
$20.01 to 30.00	$5.00		

Overseas Orders must contact CLAGGK for shipping charges.

Total price of merchandise $ _____
Shipping Charge (see chart) $ _____
Subtotal $ _____
Sales Tax (New York State Residents only) $ _____

Name _____ Total Enclosed $ _____

Address _____

City _____ State _____ Zip _____

CL01

www.americanradiohistory.com

TED NEEDLEMAN

mailto: peakcomputing@gernsback.com

FASTER NETWORKING

Networking your home or small business has gotten a lot easier over the last year or two. In many cases, the utility that this ease of implementation offers has also been somewhat reduced by the speed limitation that many easy-to-do networks impose.

The reason for this is that although setting up a network is easier than ever to do, applications have become so bloated that operating over a slow network can be more of a chore than simply not having any network at all.

We don't want to discourage anyone from putting up a network. If you have more than a single PC, having a home or small-office network is, most of the time, a joy. Sharing files, even applications, is simple to do, and the usefulness of a broadband Internet connection is greatly enhanced when family members can share in it.

Just what type and mode of network is right for you depends on several things. The most obvious choice that you have to make is whether or not you are willing to run cabling around the house or office. If you are not, then your choices become more limited—you will have to consider either wireless, home phone line, or the new power-line network approaches. We've played around with some of the initial power-line network offerings, and at 2 Mbps, they are only worth considering if wireless Ethernet won't work in your environment.

Wireless Ethernet is a robust and excellent choice for many home and small-office networks. The two most common protocols at the moment are 802.11b, or WI-FI, and 802.11a. Several vendors are also touting 802.11g, but so far we haven't seen any networking equipment that actually uses this protocol, at least on store shelves.

*This is the D-Link*Air *DI-714. This wireless gateway, which includes a four-port switch, allows users to share broadband access within 1000 feet. For those who'd rather forgo extensive cabling and sacrifice bandwidth, wireless is the way to go.*

Of the two wireless protocols, 802.11a is both the newer and the faster. At close range, it operates at up to 54 Mbps versus the 11 Mbps speed that 802.11b can move data. Neither of these wireless protocols, however, comes all that close to wired Ethernet. The slowest version of wired Ethernet, 10BaseT, moves data at a maximum speed of 10 Mbs, but does so in full duplex (both directions), effectively doubling the speed. 100BaseT, which is the most common wired protocol, has a more or less constant 100 Mbps speed. As with 10BaseT, most 100-BaseT adapters can operate in duplex mode, again almost doubling the effective speed. Wired Ethernet transmission speed remains pretty constant over moderate distances (out to about 1000 feet), unless a lot of users are simultaneously on the network.

A NEED FOR SPEED

Just as 10BaseT has pretty much been replaced by 100BaseT, the new kid on the block threatens to displace 100BaseT. That protocol is 802.3, commonly referred to as Gigabit Ethernet. As you might guess from its name, Gigabit Ethernet runs at speeds up to 2000 Mbps in full duplex mode. And it does this over standard Category 5 4-pair unshielded twisted pair cabling, which you can buy almost anywhere. When we wired the house last year, we purchased the cable at a local Home Depot. Our local store also had the jacks, plugs, and even wall boxes.

Before you start thinking that pulling Category 5 cable is too difficult, consider that my twin sons, Bryan and Scott, pulled the cable throughout a large three-story colonial home using nothing more than an electric drill, long drill bit, and a cable stapler that was also purchased at Home Depot. At the time, they were just shy of their 15th birthday. They also managed to install the wall boxes, jacks, and wire up patch cords, and troubleshoot problems when something did not work as expected.

In doing so, they uncovered a number of tips that will make the process easier. The first is to start with the highest quality cable you can afford. It does make a difference, and is less likely to break internally when you are pulling it through tight places and around corners. If we were doing it all over again, we'd spend the extra money and buy Category 5 E (enhanced) cable, rather than the generic Cat 5.

Finally, spend the money on a LAN cable tester. They aren't very expensive, costing well under $100, and can save you hours of troubleshooting time. The one we use at the moment is the LinkMaster from Ideal Industries. You can find them on the Web (*www.idealindustries.com*) or call them at 800-425-0705. This is a terrific tool,

(Continued on page 18)

www.americanradiohistory.com

PETER PIETROMONACO

mailto: computerbits@gernsback.com

The Versatile Visual Basic

Correction

The computer program in last month's "Computer Bits" column contains an error. The 8th line of type should read as follows:

inches=12*feet;

Visual Basic is a highly versatile, complex, and powerful application development system that has gained much popularity, especially in recent years. As with last month's introduction of C++, I will try to provide a general overview of the program to give you a broad working knowledge base.

Visual Basic is a fun program to learn, and it can be very useful as well. Once you've read through the article, and you feel you want to learn more about Visual Basic and how to use it to its full capacity, I encourage you to find a book you are comfortable with to learn it. There are many texts out there—just be sure it is easy to follow and caters to your level of overall computer comprehension. For example, if you fumble through simple software programs, don't buy a book that assumes too much prior knowledge on programming.

There are many other ways to access instruction and information on Visual Basic. Here are a few helpful resources:

- Visit *www.msdn.microsoft.com*, the Microsoft Developer's Network Web site. It contains links to news sources, technical articles, product information, source code, and downloads.
- Read the *Visual Basic Programmer's Journal*, a monthly magazine devoted to up-to-date programming information.

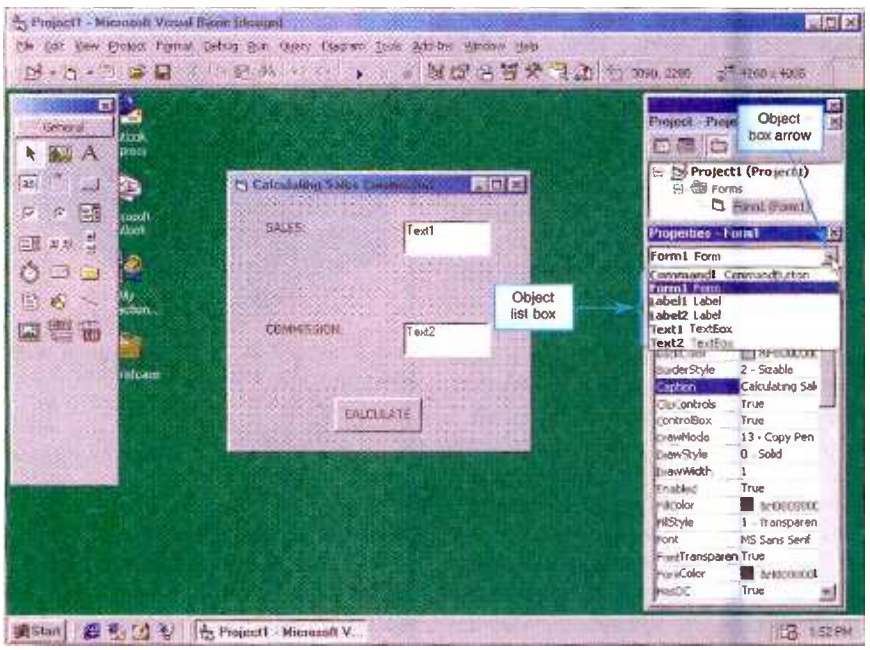

Fig. 1. Here is a screen shot of the Visual Basic program, including the ToolBar, Form, Object Box, and Properties List.

- Do a search for Visual Basic newsgroups. Some of them offer useful tips regarding user interface, syntax, etc.
- Take a class. This is a great way to get a jumpstart if you are not confident enough or just don't want to sift through tutorials and learn by trial and error.
- There are some online training opportunities that may prove to be worthwhile. Though I didn't examine any of them in depth and I would hesitate to recommend one specifically, I suggest you surf through a few of them—there could be a gem out there.
- Ask fellow programmers. Networking, or subtle "bothering," is sometimes the best way to get quick answers to simple—or not so simple—questions. A little guidance from a connoisseur can be the best medicine.

AN OVERVIEW

Visual Basic is a Windows application that helps you build your own customized applications and components for the Windows operating system. You can create professional-looking applications using the graphic user-interface of Windows—and you don't need any prior experience with computer programming. It is a pretty easy program to learn and use, and it is especially useful for quick application development by novices in the field or those in the world of business.

Visual Basic version 6 uses ActiveX technology, a set of software technolo-

www.americanradiohistory.com

gies, which allows for the integration and creation of software components called controls. ActiveX can be integrated into many different software products, and more than 2000 are currently available.

Ultimately derived from BASIC (*B*eginner's *A*ll-Purpose *S*ymbolic *I*nstruction *C*ode), Visual Basic 6 is based on the Visual Basic Programming Language. There are four editions to Version 6—Control Creation, Learning, Professional, and Enterprise. The Control Creation edition allows users to create new ActiveX controls as well as tailor existing ones. The Learning, Professional, and Enterprise editions have more advanced application development features, as well as Control Creation capability.

IS IT OBJECT-ORIENTED?

We discussed object-oriented programming in last month's article on C++. To review this intricate concept, object-oriented programming is the set of interactions among objects and operations that form the plan of the computer program. The building block of object-oriented programming is an object—every object has properties attached to it in which you store data and operation functions that manipulate the data. An object could also be a set of multiple objects.

There has been some debate over whether Visual Basic is object-oriented or not. It is essentially event-driven and object based, but Visual Basic is not object-oriented in the true sense of the phrase. It doesn't have all of the features of a full-fledged object-oriented programming language. A principal distinction is that it uses subclassing through what is called aggregation and containment, and not through inheritance.

It isn't strictly a Visual programming language, either. In Visual Basic, only the interface is created visually—the rest is created by code.

UNDERSTANDING USER INTERFACE

User interface is the way a computer program accepts instructions from the user and then presents the results. Typically, most applications have a graphical user interface which provides visual features such as small pictures, or icons, to help the user give the instructions to the computer. As an example, Windows is the most widely used graphical user interface for PCs. A graphical user interface allows you to use text and graphical images cooperatively to communicate with the computer.

Fig. 2. This screen shot shows a block of code called a subroutine. Coding is made up of many subroutines, and each subroutine is attached to an object. For example this particular subroutine is taking the value of one textbox—or object—and multiplying it by 15%. Visual Basic programming uses dot notation to identify the objects and their properties.

BUILDING AN APPLICATION

There are virtually limitless applications you can create with Visual Basic. Some common and pretty easy uses include:

- Creating your own personal telephone book
- Calculating mortgage payments, monthly sales, commissions, etc.
- Setting up conversion tables, like dollars to foreign currency.
- Tracking spending or investments.

Here is an example of an application where Visual Basic may come in handy. You are a programmer working for a retail store, and you are asked to develop a program for the salespeople to use that would calculate discounts and taxes on purchased items. The form should be neat and easy to use, and the sales personnel should be able to enter the list price of an item as well as the tax rate. The program should display the necessary information, including the net and gross price. Visual Basic provides all the tools needed to build this application.

You create applications with Visual Basic in a Three-Step Process—designing the form, setting the properties, and writing the code. Using the composition and syntax of BASIC, you must write the procedures that bring the components together. Visual Basic is inclusive of numerous built-in functions that can be applied to objects and controls, but you still have to write many of the procedures from scratch to customize your application.

Some of the specific steps involved, from beginning to end, include:

- Setting options for the SDI Interface.
- Setting the size and location of the form.
- Adding Label, Textbox, and CommandButton controls to the form.
- Adding controls by drawing and double-clicking.
- Setting Caption, Text, Locked, TabStop, and Name properties.
- Writing an event procedure.
- Adding comments to a procedure.

Describing the actual process in detail and taking you through every step of an application would literally take many pages. The best way to create your own application is to follow a step-by-step project outlined in a tutorial or other book you have chosen. If you complete each phase correctly, your application should run smoothly. Take your time, and if you run into errors—which you probably will on your first time out—then read on.

DEBUGGING YOUR PROGRAM

Basically, there are three types of errors you may run into when writing and trying to run your program. These errors, called compile errors, result

www.americanradiohistory.com

from incorrect code such as mistakes in syntax; run-time errors that occur when a statement attempts an operation that is not possible; and logic errors when program produces unexpected outcomes.

Visual Basic actually furnishes you with several tools to analyze and troubleshoot your program. You can check the value of variables, step through code, and set breakpoints. Also included is an edit-and-continue feature that allows you to change code as your program is running. You can stop the operation of your program by selecting Break from the Run menu or clicking on the break button in the toolbar.

YOU'RE ON YOUR WAY!

Now that you have an idea of Visual Basic's uses and capabilities, you should be ready to take a crack at developing an application for either personal use or for your business or profession. The concepts aren't as complex as most other programs out there, so you shouldn't expect to get overly frustrated in the learning process. Good luck, and remember to use the built-in Help functions when things don't go as planned! P

PEAK COMPUTING

(continued from page 15)

and shows you miswired connectors, shorts, and open wires. The instructions that come with the tester even show you the correct order to place the pairs into the RJ-45 modular connector. The LinkMaster is useful on all network-cabling projects, not just Gigabit over Copper.

NOT AS FAST AS POSSIBLE

Before you run out to buy a Gigabit over Copper switch and Ethernet adapter cards, realize that you probably won't get anywhere near full-duplex Gigabit Ethernet speeds with your current PCs. We have a mix of standard 100BaseT and Gigabit adapters in various PCs on our network. The PCs with 100BaseT adapters plug into a D-Link 8-port switch that has a Gigabit uplink. This uplink is plugged into the 8-port Netgear Gigabit switch.

We have six PCs with Gigabit LAN adapters, three of them with Intel cards, two with Netgear adapters, and one with a D-Link card. Only two of these PCs, however, actually run at anywhere near Gigabit speeds. That's because the standard 32-bit PCI slots in most PCs can't provide the data bandwidth that a Gigabit Ethernet adapter needs to function at its rated speed. That task requires a 64-bit PCI card slot.

Standard PCs don't have these kinds of slots. But the Monster Workstation with the terrific dual-Xeon Tyan motherboard that we built a few issues back does. So does another PC we built more recently, which also has a Tyan motherboard. This is a dual Athlon MP 2000+ system with a Tyan Tiger MP motherboard. It's a terrific system, much less expensive than the "Monster," and also has a 64-bit PCI slot for the Gigabit Ethernet adapter.

Both these system transfer data very fast, especially between each other. There is still some overhead involved, which slows things down a bit. Even the Gigabit cards mounted in the 32-bit PCI slots transfer data noticeably faster than those PCs on the network with 100BaseT adapters.

We definitely recommend jumping to Gigabit Ethernet over Copper as soon as you feel you can afford it. This is especially true if you have a very high bandwidth Internet connection or play a lot of the newest games over your network.

If not, use standard 100BaseT, secure in the knowledge that an upgrade to Gigabit Ethernet won't require a major re-cabling job. P

SOURCE INFORMATION

D-Link
www.dlink.com

Ideal Industries
www.idealindustries.com

Netgear
www.netgear.com

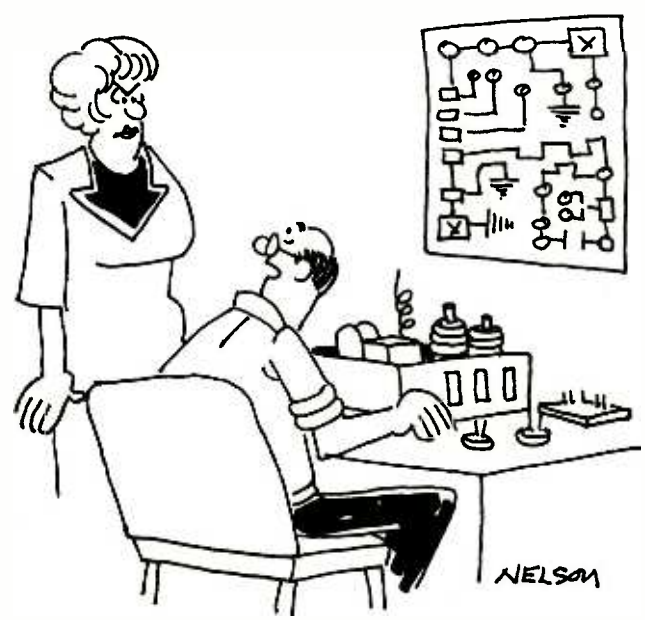

"It's a hobby. It's supposed to take a lot of time."

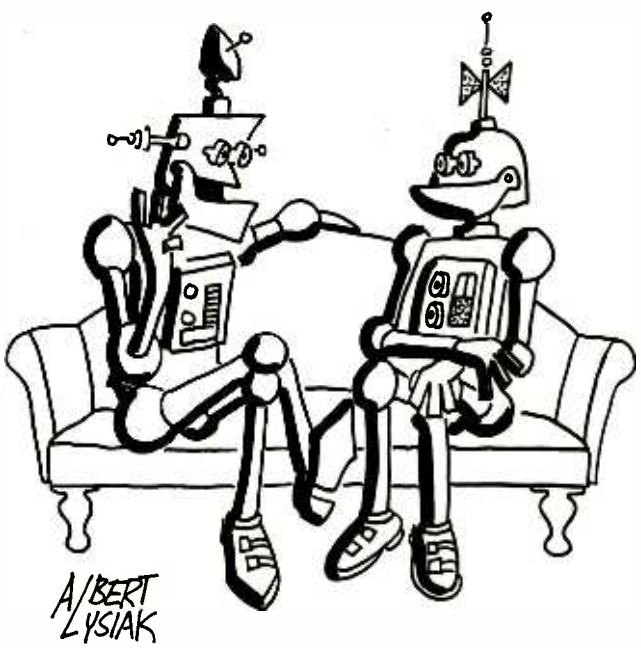

"Well that's my programming in a nutshell. Tell me about your programming."

www.americanradiohistory.com

NEW GEAR

For more information go to page 80
or e-mail: requests@berkshire-is.com

USE THE FREE INFORMATION CARD FOR FAST RESPONSE

Digital Lightmeter

With a detachable 45-inch sensor flexcord designed for hard-to-measure locations, the *LM631 Multipurpose Digital Light Meter* ($99.95) appeals to a broad range of plant engineers, electricians, contractors, home inspectors, and business interior designers. It is perfect for verifying plant and office lighting to meet workplace illumination standards and OSHA requirements. Weighing only one pound and measuring two and a half inches, it easily slips into a pocket or holster.

WAVETEK METERMAN
P.O. Box 9090
Everett, WA 98206
877-596-2680
www.metermantesttools.com

CIRCLE 60 ON FREE INFORMATION CARD

Attenuator-Amplifier

The *Model 439 Two-Channel Attenuator-Amplifier* ($317) has a gain range of 118 dB in 1-dB steps (-78dB to +40dB), which is set by a front-panel rotary encoder and displayed on an LCD. Each channel's gain can be set independently or together, depending on the position of the Set Gain switch. A power amplifier is included to drive a stereo headphone for audiometric testing or other use. The design uses low-noise op-amps, which eliminates clock noise.

TDL TECHNOLOGIES
5260 Cochise Trail
Las Cruces, NM 88012-9736
505-382-3173
www.zianet.com

CIRCLE 62 ON FREE INFORMATION CARD

Power Packs

These versatile, rechargeable *Power Packs* (starting at $48) provide convenient 12-volt DC power wherever you need it. The sealed lead-acid battery is leak-proof and maintenance-free and combines high power with long run time. Ideal for powering tools, lighting, computers, radio equipment, and more, the packs feature a built-in circuit breaker, a cigarette lighter socket, and come in a heavy-duty zippered nylon case.

JENSEN TOOLS
7815 South 46th St.
Phoenix, AZ 85044
800-426-1194 or 602-453-2542
www.jensentools.com

CIRCLE 61 ON FREE INFORMATION CARD

Clamp Meter

Measuring AC current to 1000A and AC voltage to 600V with a 1.2% accuracy, the *Model 380974* ($149) is a unique combination of a clamp meter and phase-rotation tester. It also measures resistance, frequency, and capacitance and includes diode and continuity testing. Measurements are displayed on a 3¾-digit (3999) count LCD with data hold, peak hold, and a 40-segment bar graph. It comes complete with three test leads, a 9-volt battery, and a case.

EXTECH INSTRUMENTS
285 Bear Hill Road
Waltham, MA 02451-1064
781-890-7440
www.extech.com

CIRCLE 63 ON FREE INFORMATION CARD

Soldering Station

The *Weller Silver-Series Dual Digital Soldering Station* ($389) permits the use of two soldering irons, each with its own independent temperature setting. Tip temperature is electronically controlled through a temperature range of 100° F to 850° F. A pushbutton temperature control with an LED readout displays both temperature settings and tip temperature. The power base features a static dissipative housing to prevent ESD damage. The station operates on 120 V_{AC} and comes with a 3-wire power cord.

CONTACT EAST
7815 South 46th St.
Phoenix, AZ 85044
800-225-5370 or
602-453-2542
www.contacteast.com

CIRCLE 64 ON FREE INFORMATION CARD

www.americanradiohistory.com

Soldering Iron

Ideal for quick hobby repairs, the *Antex G3/U Miniature Soldering Iron* ($24.75) heats up fast—to 750° in just 45 seconds—and recovers instantly after soldering each joint. Since the heating element is directly under the tip, the mini-iron is easy to use with a plastic handle that stays cool to the touch. It is available with over 40 different slide-on style tips for a variety of specialized soldering applications, measures only 6½ inches long, and weighs under ¼ oz.

M.M. NEWMAN CORP.
24 Tioga Way
P.O. Box 615
Marblehead, MA 01945
800-777-6309
www.mmnewman.com

CIRCLE 65 ON FREE INFORMATION CARD

Power Supplies

Ideally suited for driving modern transducers, digital panel meters, operational-amplifiers, and data-acquisition components, these *AC/DC Instrumentation Power Supplies* ($54) feature impressively low output noise. Perfect for powering sensitive instrumentation, they accept universal AC inputs and deliver +5V_{DC}, +12V_{DC}, and/or +24V_{DC} outputs from single, dual, or triple-output configurations. They are offered in 5W, 10W, or 16W power ratings and have up to 80% efficiency.

DATEL, INC.
11 Cabot Blvd.
Mansfield, MA 02048-1151
508-339-3000
www.datel.com

CIRCLE 67 ON FREE INFORMATION CARD

DC Power Supplies

Intended for manufacturing, laboratory, and education applications, the *AEMC AX500 Series* (starting at $395) offers a comprehensive line of digital DC linear power supplies. Designed around highly-efficient torodial transformers, they dissipate little heat, have low electromagnetic emission, and will operate continuously at full-rated output. Three models are available offering single, dual, and triple output capabilities.

AEMC INSTRUMENTS
200 Foxborough Blvd.
Foxborough, MA 02035-2872
800-343-1391 or 508-698-2115
www.aemc.com

CIRCLE 66 ON FREE INFORMATION CARD

Cordless Screwdriver

This heavy-duty *7.2-Volt Cordless Screwdriver* ($179.95) offers 80 inches/lb. of maximum torque, an adjustable 2-position handle, variable trigger speed of 0–500 RPM, reversing capability, and a quick-release ¼-inch hex chuck for positive bit retention. Other features include a 16-position clutch, a metal gearbox, metal planetary transmission, a fan-cooled motor, a 115V_{AC} charger, two screwdriver bits, and a heavy-duty carrying case.

JENSEN TOOLS
7815 South 46th St.
Phoenix, AZ 85044
800-426-1194 or 602-453-2542
www.jensentools.com

CIRCLE 68 ON FREE INFORMATION CARD

Tool Set/Workstation

Designed for today's professional automotive technician, this *129-Piece Metric Tool Set and Mobile Storage Cabinet* ($2999) was specifically selected to provide the ideal tool mix. Constructed of steel and high-impact plastic, the mobile workstation features roller-bearing drawer slides and an integrated locking system to prevent theft or accidental opening. Just some of the tools include chain nose pliers, combination wrenches, ratchets, and screwdrivers.

SK HAND TOOL CORP.
9500 West 55th St., Suite B
McCook, IL 60525-3605
708-485-4574
www.skhandtool.com

CIRCLE 69 ON FREE INFORMATION CARD

www.americanradiohistory.com

NEW LITERATURE

Wiring Device Catalog

from Leviton Manufacturing Co.
59-25 Little Neck Parkway
Little Neck, NY 11362
800-323-8920
www.leviton.com
Free

Now available on CD-ROM, this catalog showcases more than 1000 color photos and dimensional drawings to aid product comprehension and identification. It features an expanded technical and reference information section that helps define evaluation procedures and performance standards used to specify and select products. Both the printed version of the catalog and the CD-ROM use intuitive icons, information tiles, modular-specification tables, and color-coding techniques for logical presentation of the information.

The Book Of VMware

by Brian Ward
No Starch Press
555 De Haro St.
San Francisco, CA 94107
800-420-7240
www.nostarch.com
$39.95

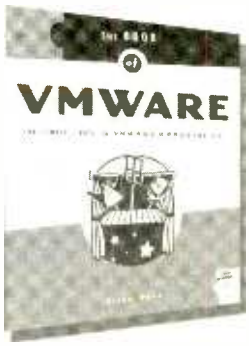

This introduction to VMware Workstation is a comprehensive guide to everything from installation and device configuration to file transfers and networking. The book will show you how to get the most out of Windows, Linux, and FreeBSD; and set up VMware devices such as virtual disks, ethernet interfaces, USB devices, and more. You will also learn how to troubleshoot common problems and set up dual-configuration systems.

Electronic and Electrical Servicing: Level 2

by Ian Sinclair and Geoff Lewis
Newnes Press, Butterworth-Heinemann
225 Wildwood Ave.
Woburn, MA 01801
781-904-2500
www.bh.com
$29.99

Designed to provide complete coverage of the five core units of the new Level 2 Progression Award from City & Guilds, this text gives a thorough grounding in the electronics and electrical principles required by service engineers (it's endorsed by the EEB). Topics include health and safety, alternating currents, combinational logic, DC technology, audio and television, semiconductor diodes, and more.

Classical Optics And Its Applications

by Masud Mansuripur
Cambridge University Press
40 West 20th St.
New York, NY 10011
212-924-3900
www.cambridge.org
$45

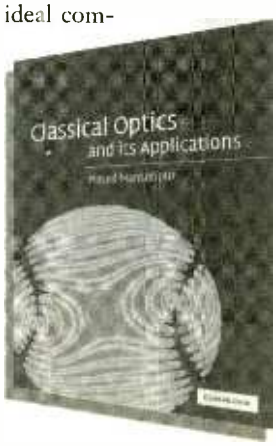

Covering a broad range of the major topics in classical optics, this text is an ideal companion for graduate-level courses in optics, providing supplementary reading material for teachers and students alike. Industrial scientists and engineers developing modern optical systems will also find this book an invaluable resource. Mathematical content is kept to a minimum, as the book aims to give the reader insight into optic phenomena with the help of diagrams, graphs, and computer-simulation images.

All The Mathematics You Missed But Need To Know For Graduate School

by Thomas Garrity
Cambridge University Press
40 West 20th St.
New York, NY 10011
212-924-3900
www.cambridge.org
$25

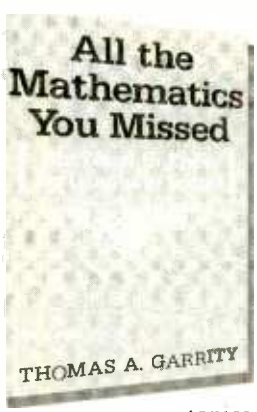

Are you considering a career in a math-related field, but feel you need to brush up in certain areas? This book is ideal for advanced undergraduate, and beginning graduate students in mathematics, physical sciences, engineering, computer science, and economics. It covers important topics in math, illustrating basic points and emphasizing the intuitions behind the subject. The content covers linear algebra, vector calculus, differential geometry, probability theory, complex analysis, and more.

www.americanradiohistory.com

Understanding Telecommunications and Lightwave Systems: An Entry-Level Guide, Third Edition

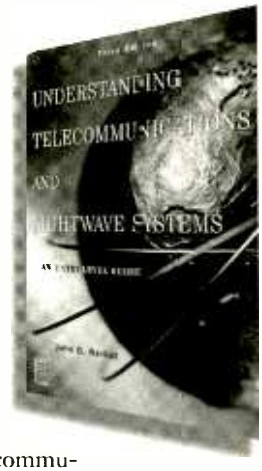

by John G. Nellist
John Wiley & Sons
1 Wiley Drive
Somerset, NJ 08875-1272
800-225-5945
www.wiley.com
$95

This guide to the basics of telecommunications and digital technology presents a nontechnical treatment of how voice, video, and multimedia simultaneously travel over modern systems. The author's examination of recent developments includes third-generation cell phones with microbrowser capabilities, changes in the global PCS network, satellite communications, and more.

Master Electrician's Review

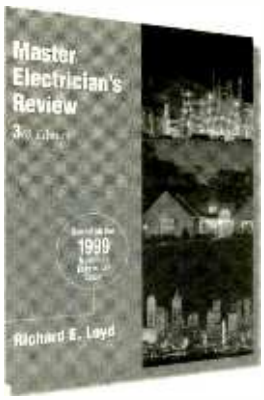

by Richard Loyd
Delmar, Thomson Learning
P.O. Box 8007
Clifton Park, NY 12065
800-998-7498
www.delmar.com
$66.95

Chock-full of knowledge and professional expertise, this study guide is ideal for aspiring licensed master electricians. It has new, realistic practice exams with the answers in the back and a math refresher for updating skills in fractions, decimals, square roots, and powers. Each chapter examines a specific topic on the master electrician licensing exam in detail, from general wiring methods and branch circuits to special conditions and communications systems.

Fabricating Printed Circuit Boards

by Jon Varteresian
LLH Technology Publishing
3578 Old Rail Road
Eagle Rock, VA 24085
540-567-2000
www.llh-publishing.com
$29.99

Providing a complete overview of the printed circuit board design process, this text describes how to produce printed circuit boards in small quantities (ideal for prototypes) with an emphasis on safety. The author begins with the conversion of a schematic diagram into a board layout and proceeds to the fabrication of the board itself.

Newnes Dictionary Of Electronics

by S. W. Amos and R. S. Amos
Newnes Press, Butterworth-Heinemann
225 Wildwood Ave.
Woburn, MA 01801
781-904-2500
www.bh.com
$24.99

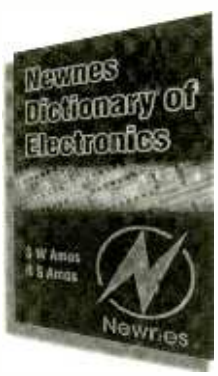

An essential item on the bookshelves of electronics engineers, managers, technicians, students, and enthusiasts, this book is written in a compact format that makes it an ideal working dictionary. The definitions are clear and concise and supported by numerous illustrations and circuit diagrams. It also features a substantial, handy section devoted to acronyms and abbreviations, like ADDER, LAP, FIB, and WORM.

DAFX: Digital Audio Effects

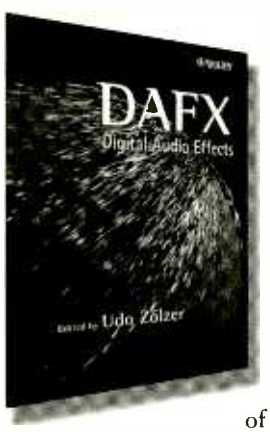

by Udo Zölzer
John Wiley & Sons
1 Wiley Drive
Somerset, NJ 08875-1272
800-225-5945
www.wiley.com
$95

Aiming to present the main fields of digital audio effects, this book introduces the reader to digital signal-processing concepts, as well as software implementations using MATLAB. Contributors analyze the latest findings and developments in filters, delays, modulators, and time-frequency processing of sound. The approach of applying digital signal processing to sound will appeal to sound engineers, as well as researchers and engineers in the signal-processing field.

www.americanradiohistory.com

BUILD "THE TUBESTER"

NICK CINQUINO AND GORDON MACMILLAN

Tube amplifiers have an almost supernatural reputation among electric guitar players because it is widely believed that a tube amp sounds better in some qualitative way, often described as warmer or fuller than a solid-state amp. Ever since transistor-based amplifiers took the place of their tube counterparts, controversy surrounds the relative merits of each. Some audio experts claim that there is no significant audio difference between a (properly designed) tube or transistor amp, and this is probably true so long as the amps aren't overdriven. Other audio experts say differences do exist, that tubes add different harmonic content and filtering possibly due to higher inter-electrode capacitances and/or mechanical vibrations (microphonics) and/or transformer inductances. Furthermore, when a tube is driven into severe distortion due to saturation or cutoff, the waveform is different from that of an overdriven transistor, e.g. less sharp squarewave edges. There have been many attempts to reproduce the tube-amp sound with solid-state devices. Maybe there's no shortcut—a tube must be used to incorporate all of its specific non-linear properties!

What's On Your Plate? In this very unusual construction project, we'll build the *Tubester*, a tube pre-amp/effects box for electric guitars that is connected between the guitar and power amplifier. The circuit is a bizzare combination of integrated circuits and tubes! If you play an electric guitar, know someone who does, or just always wanted to tinker with an old vacuum tube like Grandpa used to wrestle with, this project is for you! Some other big plusses include: no high DC tube plate voltages to throw you across the room; inexpensive, easily acquired components; simple design; and very low parts count. If you've ever taken a look at a typical tube circuit schematic, the plate voltage is often $100V_{DC}$ or higher (ouch!), and there are lots of specialized transformers between tube stages. Well, in our circuit, the tube selected gives good gain even at a non-painful $9V_{DC}$, and we've done away with annoying, expensive transformers by the use of modern ICs. The whole project should cost less than $30!

This project is an inexpensive, safe, and easy introduction into vacuum-tube electronics, audio pre-amps, and audio distortion.

Back To The Future...With Tubes! A quick review of vacuum-tube electronics is in order. Refer to Fig. 1 for the not-so-very-familiar schematic of an electron tube! The heater filament causes a cloud of electrons to form around the cathode. The plate is at a positive potential relative to the cathode, so those negatively charged electrons around the cathode want very badly to travel to the plate and the only factor stopping them is the grid voltage. The grid, which lies between cathode and plate, will repel the cathode electrons when negative and will allow current flow when positive. It sounds a lot like an FET, doesn't it? Thus, there is a cathode-to-plate resistance present that is controlled by the grid. When we add R1, the plate load resistance, we now have a voltage divider and can sample a grid-controlled variable voltage output, precisely what's needed!

Next, look at Fig. 2, which is a plot of grid voltage vs. plate divider voltage for our 6F5 tube test circuit with $9V_{DC}$ at the plate and variable grid voltage. Note the significant gain and also note the large, fairly linear range bordered on both ends by curved non-linear regions. Our circuit will apply the guitar audio to either the linear range for clean hi-fi sound or to the non-linear region to generate the tube-distortion sound. A tube is of course much bigger than an FET, but one interesting advantage of a tube is that it is relatively impervious to ESD (electrostatic discharge) and even EMP (*e*lectro-*m*agnetic *p*ulse)—just don't drop the bugger!

How It Works. An electric guitar's output of about 50mV is applied to IC1, a 741 op-amp with a gain of about 40. (Refer to Fig. 3.) Note that pot R1 is connected to U1 in the input offset null circuit, allowing slight changes in the DC voltage level at the output of IC1, which in turn affects the bias level of the tube's grid (similar to a gate or base transistor bias). This allows us to bring the audio wave closer to the "knee" of the tube's performance curve (see Fig. 2), a very non-linear region! The cleanly amplified output of IC1

www.americanradiohistory.com

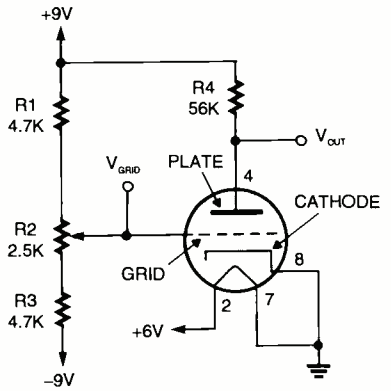

Fig. 1. An easy test circuit that will familiarize you with the characteristics of a 6F5 high-mu triode tube. Note pinout markings.

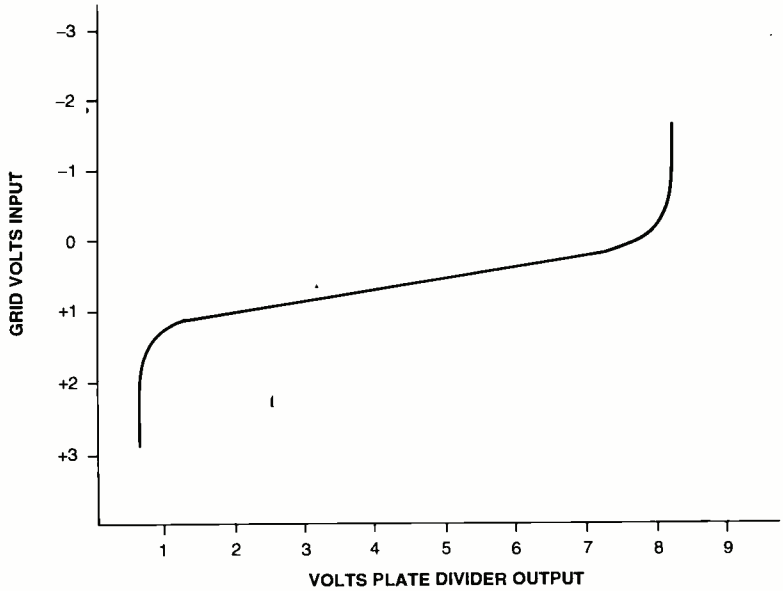

Fig. 2. A plot of plate-divider output voltage versus grid-input voltage, from the circuit of Fig. 1.

is variable via pot R2 from 0V to about 2 volts peak-to-peak, with a variable DC component as discussed previously. This waveform is direct-coupled to the 6F5 tube's grid, which amplifies the wave by about X5.

For low-amplitude inputs, the output will be undistorted, but high inputs will obviously "run out of headroom" and get "squashed" on one or both ends. The circuit is totally variable between these two extremes, from undistorted to significantly distorted and everything in between. This high-impedance audio output is sampled from the plate divider, and RC coupled via R10 and C1 to IC2, another LM741 set up simply as a buffer or voltage follower. It takes the place of a coupling transformer by taking in the high-z audio and outputting a relatively low-impedance audio wave. It has no effect on the amount of distortion from the tube. Pot R3 adjusts the output level from the 741 buffer to your audio power amp, which could be solid-state or tube. Note that we're dealing with two separate power supplies; a $\pm 9V_{DC}$ for the tube plate and op-amps and a $6V_{DC}$ (4 C batteries to deliver 150mA) for the tube filament or heater. You can even get away with 4 AA cells, if you don't mind changing them frequently.

Getting It Together. Review the items on the Parts List and acquire the items you don't have "in stock." Start by mounting the tube socket, pots, switches, LEDs and phono jacks into the medium-size project box. A 1-inch hole-cutting saw/drill probably gives the cleanest cut for the tube socket hole in a plastic enclosure.

Next, make the circuit board to hold the two op-amps and other components. Since this is an AF circuit, layout isn't critical—just avoid scrunching everything together too tightly. The unit pictured in Fig. 4 has a 2-inch piece of "matchboard" (laid out like a breadboard) holding the soldered components and input/output wires. Use Fig. 4 as a placement guide for mounting the items to the enclosure. Use a short piece of shielded cable to connect the output of IC1 to the 6F5's grid that is at the top of the tube. When soldering the leads to the tube socket, double-check the

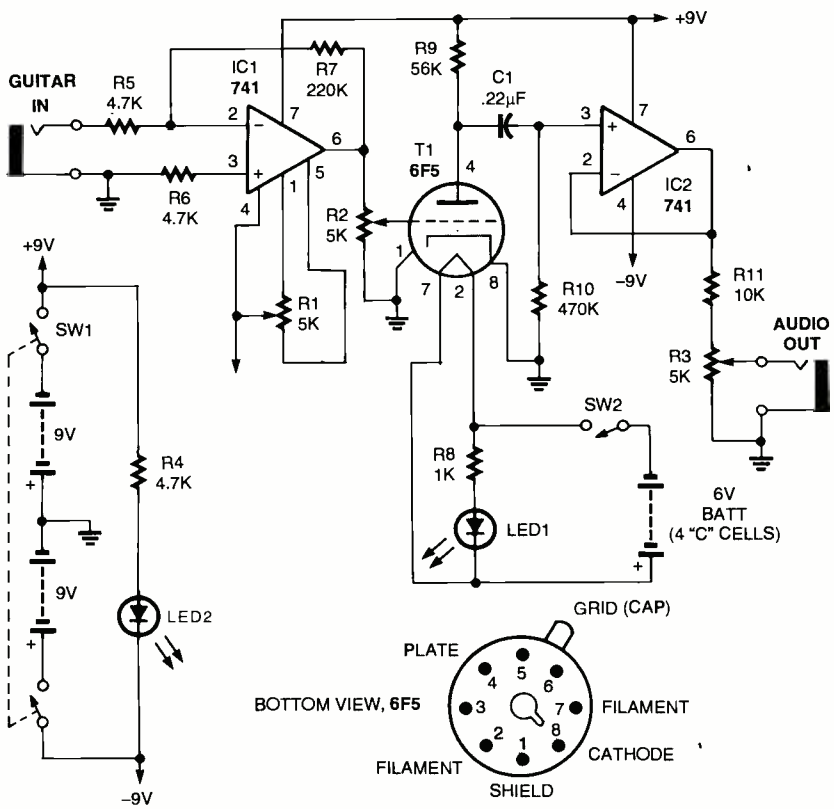

Fig. 3. The complete circuit schematic for the Tubester pre-amp, plus a bottom view pinout of the 6F5.

www.americanradiohistory.com

PARTS LIST FOR THE TUBESTER PRE-AMP FOR GUITAR

VACUUM TUBES
T1—6F5 high-mu triode

SEMICONDUCTORS
IC1, IC2—LM741 op-amp
LED1, LED2—T1 ¾, any color

CAPACITORS
C1—0.22-µF

RESISTORS
(All resistors are ¼-watt, carbon-film units unless otherwise noted.)
R1, R2, R3—5000-ohm linear potentiometer
R4, R5, R6—4700-ohm
R7—220,000-ohm
R8—1000-ohm
R9—56,000-ohm
R10—470,000-ohm
R11—10,000-ohm

ADDITIONAL PARTS AND MATERIALS
J1, J2—¼-inch mono phono jacks
B1, B2—9-volt batteries
B3—Four "C-cells" in series
SW1—Dpdt mini-switch
SW2—Potentiometer switch, add-on type
Octal tube socket, tube grid cap, 9-volt battery clips, holder for 4 C cells (6V), three pot knobs, medium project enclosure, 6-inch shielded cable

SOURCES
The 6F5 tube, grid cap and octal socket are available through:
TRIODE ELECTRONICS
www.triodeel.com
773-871-7459
or
ANTIQUE ELECTRONIC SUPPLY
480-820-5411
www.tubesandmore.com

The rest of the components/parts are available through RadioShack.

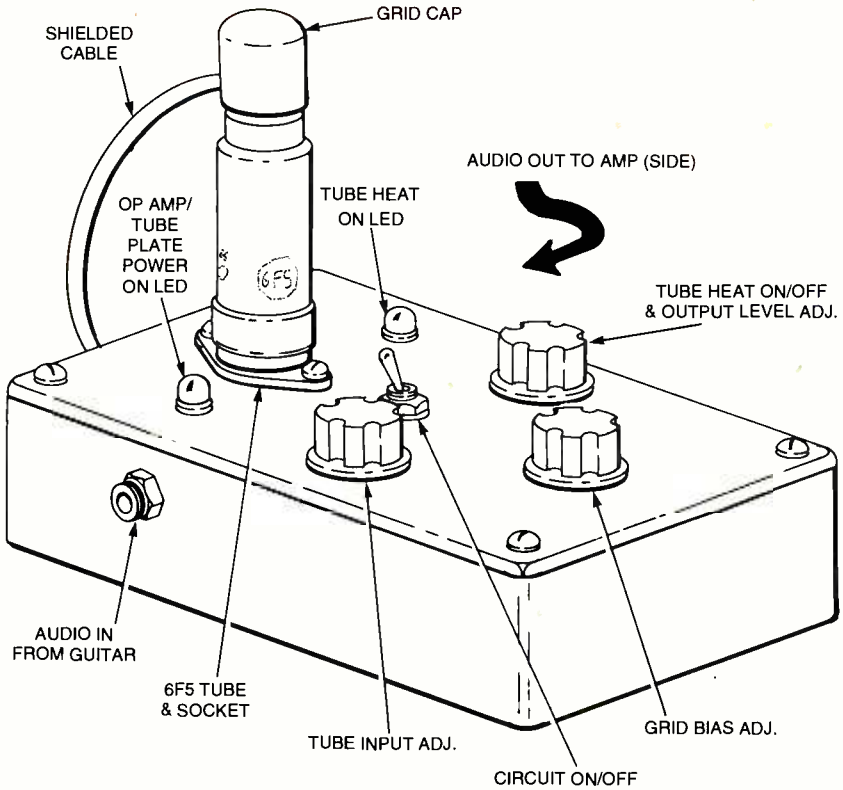

Fig. 4. A diagram of the completed Tubester project, with suggested layout of pots, tube socket and tube, in/out jacks, LEDs and switches. See the photo for another view. The 6F5 tube gives the project a funky, menacing appearance!

connections via the schematic to make sure everything is right, since working with tubes is so...different!

Double-check all PC board input/output wires, since there are quite a few of these running to the pots, etc. Finish off your tube pre-amp by plugging in the tube, connecting the grid cap, installing all the batteries, and adding the pot knobs.

Ready To Rock! Well, we're ready to wake up Jimi Hendrix with our own rendition of "Star Spangled Banner!" Okay, maybe not. At any rate, let's test the unit. Plug an electric guitar into the input jack, and plug the output into a musical instrument power amp. Switch on the power amp, then switch on your pre-amp's tube heat power and circuit power, and...Hey! Something's wrong. It's not doing anything! Welcome to the world of tubes, the little bugger needs about 30 seconds to warm up; you'll have to wait until your tube is good and ready to cooperate!

Ahhh, that's better—you hear the guitar now! There are some general guidelines to using your pre-amp. For clean sound, keep the tube input low (pot R2) while keeping the buffer output high (pot R3). For distortion, dial up the opposite, i.e. high tube input, low buffer output. For a cool 60's sound, boost your amp's treble and bass while attenuating midrange. Dial up just a little distortion on the pre-amp, and if your amp has reverb, lay it on thick, while picking close to the bridge! Note that the kind of distortion produced is not heavy-metal style, it's much gentler, warmer, and bassier than a typical "fuzzbox."

Adjusting pot R1 makes very subtle changes in the sound—have fun experimenting with that. Since the unit is essentially a pre-amp, it may be very helpful in pre-amplifying older electric guitars with weak pickup magnets. When LED 1 or 2 starts to dim, you'll know it's time for a battery change. Keep in mind that tubes do go bad—they're supposedly designed for 1000 hours of gentle use. If the circuit quits altogether or loses gain, and all batteries are OK, suspect the tube. You might want to dredge up Grandpa's old tube tester!

Finally, in the effort to increase microphonics, try keeping the effects box close to the magnetic fields and mechanical vibrations of the amp's speaker and circuitry; this may again cause subtle, tube amp style changes in the sound of your setup! Your tube pre-amp is cool, man, cool!

www.americanradiohistory.com

Amazing Grace

MARIA ORLANDO

It's a truly remarkable feat that a woman born at the turn of the century earned a Ph.D. in Mathematics from Yale University, programmed the first large-scale digital computer, and served in the U.S. Navy at the rank of Rear Admiral. That's just the beginning. Grace Hopper, or "Amazing Grace" as she was called by her close friends and comrades, had an extraordinary career in computer science, software development, teaching, the military, and business management. Dedicated to the advancement of computer technology, she created the first compiler, programmed the first computer, and developed the precursor to the COBOL programming language.

Grace was blessed with fiery ambition and a love for math and science, a combination that led to astounding success. She was also an eloquent speaker and gifted teacher, known for her inspirational lectures, of which she gave over 200 in her lifetime.

The Beginning. Grace Brewster Murray was born on December 9, 1906 in New York City, the eldest of three children. Both of her parents were huge sources of motivation. Her mother, Mary Van Horne Murray, had a passion for mathematics, which she passed on to her daughter. Walter Murray, her father, was an essential role model in her life. Though he was physically handicapped due to a double leg amputation, he continued to work as an insurance broker. Grace admired him for his fortitude and strong will. Because of his positive attitude and his ability to overcome such a hardship, she knew she was capable of anything.

"A ship in port is safe, but that is not what ships are for. Sail out to sea and do new things." – Grace Hopper

As a young girl, Grace had a keen curiosity for mechanics and the physical nature of machinery. She was known to fiddle with gadgets from time to time. At the age of seven, she dismantled seven alarm clocks in her family's house, then tried to put them back together—she wanted to know how things "ticked."

Walter and Mary Murray wanted their daughters to flourish in a society where, traditionally, females were discouraged from being educated, trained, and having lifelong careers. Both girls attended private schools, with expectations of attending college and becoming professionals.

In 1924 she attended Vassar College where she studied both math and physics. Grace then went on to study at Yale, where she finished a Master's and Doctorate program in Math. In her thesis "A New Criterion For Reducibility Of Algebraic Equations," she proved problems geometrically, which she said "upset everybody, but I always liked geometry better."

Fond of the world of academia, Grace accepted a teaching position at Vassar, and eventually became an Associate Professor. During her years of teaching she married Vincent Foster Hopper, a Professor of English at New York University. They never had any children and later divorced.

The Patriot. Grace's family had a history of serving in the Military. Her great grandfather was a Rear Admiral in the U.S. Navy, and his dignified appearance dazzled her as a child. She recalled "I was about three years old when I met him...He was tall and straight, and carried a black cane with a silver top on it...He was a very impressive gentleman!"

In keeping with the tradition, Grace resigned from Vassar in 1943 in the midst of World War II and joined the U.S. Navy. Enlisting was not so easy for her, however. The U.S. Government declared that math was crucial to the war effort, and felt she could be best utilized as a civilian. Besides that, Grace was underweight according to military standards—105 pounds. Taught by her father how to overcome obstacles, she fought back, and obtained a waiver for the weight requirement and special government permission. In December of that year she was sworn in to the U.S. Naval Reserve.

In 1944 she was commissioned a lieutenant and was assigned to the Bureau of Ordinance Computation Project at Harvard University. There she worked on the first full-scale digital computer—the 51-foot long, eight-

www.americanradiohistory.com

Captain Grace Hopper, Head of the Navy Programming Language Section, at her desk.

foot high Mark I.

Grace worked with a team of developers, led by Howard H. Aiken, who were responsible for programming the monster computer. Aiken first greeted her with "Where the hell have you been?", and then proceeded to say "Here, compute the coefficients of the arc tangent series by next Thursday." Always up for a challenge, Grace dove right into her work. She and her comrades were the first ever to program the Mark I. This was a rare and admirable accomplishment, especially for a woman of that era.

Grace receives congratulations from President Reagan at the White House following her promotion to the rank of Commodore.

During that time, the Mark I was being used to calculate angles for aiming Naval guns and self-propelled rockets. She and her teammates were required to put in long hours, transcribing and inputting codes to insure the system was running properly. Recognized for her hard work, Grace received the Naval Ordinance Development Award in 1946.

A Vision is Realized. Though she retained a position in the Navy reserves, Grace felt the need to move on. In 1949, the Eckert-Mauchly Computer Corporation hired her as a senior mathematician, where she worked with the BINAC, the Binary Automatic Computer. The BINAC was programmed using C-10 code instead of punch cards, which were used by the Mark series. The BINAC led the way to the UNIVAC I and II, the first commercial computers.

HONORS AND AWARDS

Here is a sampling of some of her Honors and Awards she received over her lifetime. There are over 65 of them in all.

1946—Naval Ordinance Development Award
1962—Fellow, American Association for the Advancement of Science
1964—Society of Women Engineers, SWE Achievement Award
1968—Institute of Electrical and Electronics Engineers, Philadelphia Section Achievement Award
1969—Data Processing Mgmt. Assoc., Computer Science "Man Of The Year" Award
1970—American Federation of Information Processing Societies, Harry Goode Memorial Award
1972—Wilbur Lucas Cross Medal, Yale University
1972—Fellow, Association of Computer Programmers and Analysts
1973—Distinguished Fellow of the British Computer Society
1976—Honorary Doctor of Science, Pratt Institute
1980—Navy Meritorious Service Medal
1983—Federally Employed Women Achievement Award
1983—Living Legacy Award, Women's International Center, San Diego

Grace Hopper was a visionary with perseverance, and one of her goals was to make computers more accessible to a wider range of people. Determined that programming could be more user-friendly, she wanted to develop a programming language that could be understood by the layman, something closer to "plain English." Most programmers scoffed at the idea of a computer comprehending anything but complex code, and so she stood alone in her philosophy.

That didn't have an adverse affect on Grace, however. Instead she was driven to prove herself right. She was sure that a programming language could be simplified, somehow.

Her persistence finally paid off. Three years later

www.americanradiohistory.com

Grace developed FlowMatic, the first English-language data processing compiler. FlowMatic was the only business language that existed at the time, and it served as the foundation for COBOL (*CO*mmon *B*usiness-*O*riented *L*anguage), which was released in 1959.

Her Career Progresses. Eckert-Mauchley was bought by the Remington Rand Corporation (who eventually merged with the Sperry Corporation to become Sperry-Rand), and they appointed Grace as Systems Engineer and Director of Automatic Engineering Development of the UNIVAC Division. During her time at Sperry-Rand, Grace stayed connected to the world of academia and the U.S. Navy as a visiting lecturer and consultant. She thrived on holding multiple jobs and keeping extremely active.

In 1967, however, she was recalled to active duty in the Navy, forced to take military leave from her job, and finally retired from Sperry-Rand in 1971 at the age of 65. When Grace retired from the Navy in 1986, she was the oldest active duty officer in the U.S., and she had reached the rank of Rear Admiral.

Her career was not yet over, as she still had some fire left at the age of 80. Digital Equipment Corporation hired her as a senior consultant, where she stayed until 1990.

Grace Hopper attends groundbreaking ceremonies for the Grace Hopper Navy Regional Data Automation Center.

In her honor, the USS Navy named one of their most capable warships the USS Hopper.

An Inspirational Teacher. Remembered as a charming, tiny, white-haired lady in a Navy uniform by her comrades and students, she was a feisty, brilliant leader with a passion for change. She is quoted as saying "Humans are allergic to change. They love to say 'We've always done it this way.' I try to fight that. That's why I have a clock on my wall that runs counter clockwise."

She was known to captivate her audiences with her inspirational lectures, where she spoke of advancements in the field of computer technology and the need for change in the future. Her favorite age group were the 17-20 year olds, who for her represented opportunity. They were the wave of the future, full of life, ready to take on new challenges, and she served as a source of encouragement to them.

Grace was a born leader with a positive outlook on life and the world of business. She believed people, especially young adults, need mentors in their lives. To quote her: "You manage things, you lead people. We went overboard on management and forgot about leadership. It might help if we ran the MBAs out of Washington."

A Futurist And Pioneer. Admiral Grace Hopper received many awards and commendations (see Sidebar) for her contributions and accomplishments in academia and developments in computer technology. She saw the potential of computer applications, and through her persistence and determination she was the driving force behind many advances in programming.

She died on January 1, 1992 in Arlington, Virginia, and was buried with full Naval honors at Arlington National Cemetery. Though most remember her for work with computers, it was teaching and service to her country that she was most proud of. P

BUY BONDS

www.americanradiohistory.com

Pinewood Derby Digital Race Timer

DOUG MALONE

If you have ever been involved with a Pinewood Derby you know how seriously the contestants (and some parents) take the races. You will probably want to do everything you can to make things run smoothly. This construction project is the result of my desire to do just that and comes from personal experience.

As the person responsible for running my son's Pinewood Derby races, I was very interested in fair and fun races for the contestants and their families. I had inherited a nicely made racetrack and also an electronic end-of-race detector for two lanes. The detector was to indicate the winner of each heat so that the double-elimination tournament could proceed smoothly. However, there were four serious problems with the equipment and race procedures.

First, the end-of-race detector indicated a tie whenever the race was close. Second, when the two cars racing were very closely matched, it was very time consuming to keep switching them back and forth until one car had won in both lanes. Third, it was no fun dealing with the intricacies of insuring that each car raced an equal number of times, particularly when there was an odd number of contestants for a particular heat. Fourth, the end-of-race detector gave no indication to the crowd which car had won.

In addition, dealing with upset parents (due to the above problems) was very distressing. To avoid all of these problems, I decided to design and build the *Pinewood Derby Digital Race Timer* with an optional-remote display. The design criteria were that the unit would have enough timing resolution to avoid ties and that the remote display with large, easily read digits would inform the spectators of the race-elapsed time. Each car would run in the same lane, with the fastest time out of three trials counting. In view of the seriousness with which many contestants view the races, extra care was taken to insure reliable operation. Specifically, race-start and race-end sensors use Schmitt-trigger and other noise-reducing circuitry. Another design feature is that identical hardware and software are used in both the master timing unit at the scorer's table and the remote display. This means that if the timer fails on race day, the remote display can be pressed into duty for use as the race timer to keep the competition going.

Alternatively, there could be only one unit for use by the scorekeeper. The resulting timer can accommodate races of up to 9.999 seconds in duration with either .001 seconds (1msec) or .00025 (250µsec) resolution, depending on the software version. Five 0.8-inch seven segment LEDs display the race-elapsed time that can be easily read from over 20 feet. To make it quick to set up (and break down for storage), both sensors and the master and remote units are interconnected by cable assemblies that use modular telephone plugs.

Ready, Set, Go. Design and build this digital timer for a fair and fun race

Circuit Description. As the circuit diagram in Fig. 1 shows, the master-timing unit (and optional remote display) is built around a Z80 microprocessor, IC7. The 3.072-MHz oscillator, IC2, orchestrates processor-instruction execution, serial communication, and race-elapsed time computation—see the Sidebar for an explanation on why this particular frequency was chosen. Program storage is provided by a 27C64 8K × 8 SRAM, IC6. The race-elapsed time is measured with a Z80 family CTC (*C*ounter/*T*imer/*C*hip), IC3. Serial communication with the remote is accomplished through IC4, a Z80 family SIO (*S*erial *I*nput/*O*utput) IC. TTL level signals from the SIO are translated to RS232 levels by IC5. Race-elapsed

www.americanradiohistory.com

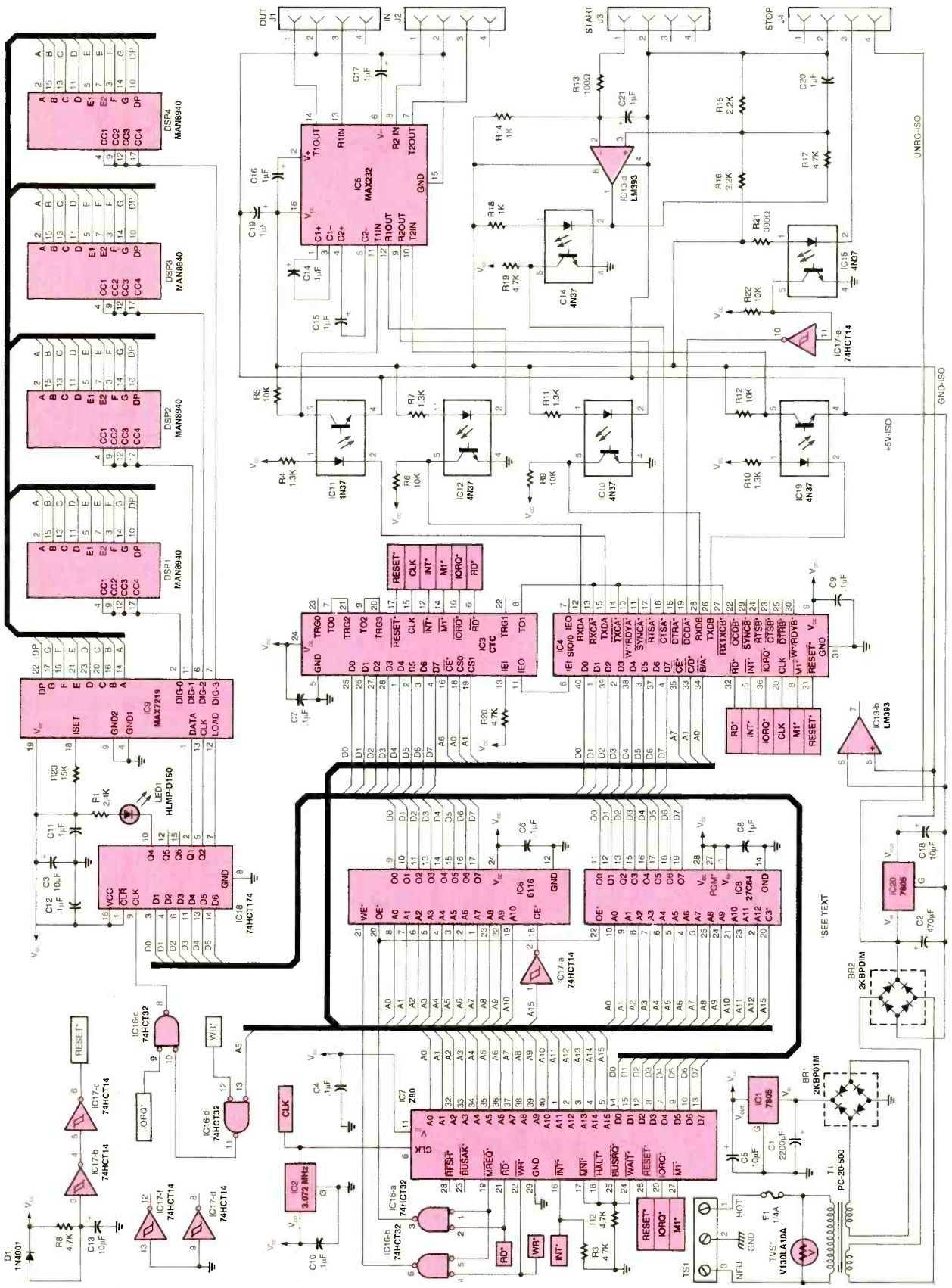

Fig. 1. The Pinewood Derby Timer is built around a Z80 microprocessor. Four seven-segment LED displays show the race-elapsed time and opto-isolated inputs and outputs insure reliable operation.

www.americanradiohistory.com

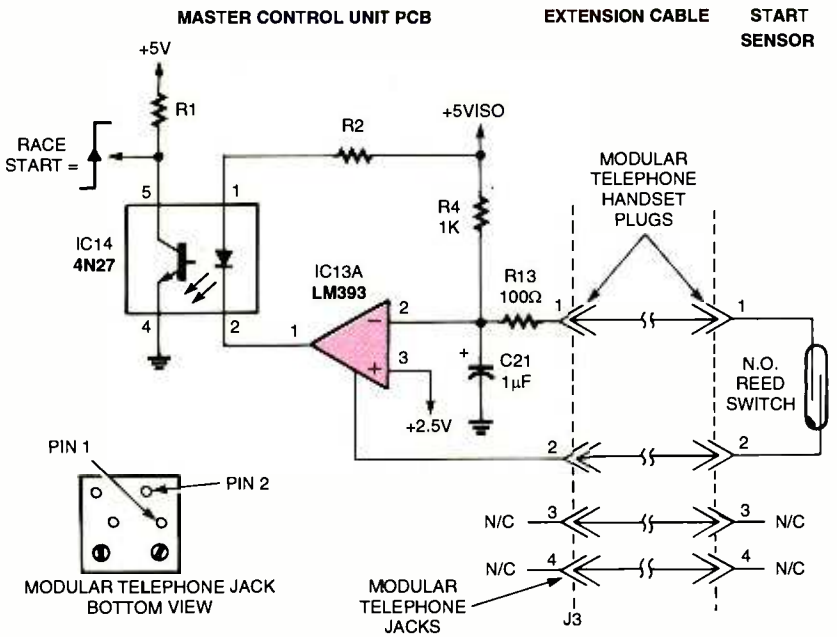

Fig. 2. A telephone handset cable connects the start sensor to the master control unit PCB. When wiring-up the reed switch, carefully follow the telephone jack pin-out diagram.

time is sent from the Z80 data bus to the latch, IC18. Then IC9 receives the latched data and drives the multiplexed seven-segment LED displays, DSP1–DSP4. Two separate 5-volt regulators, IC1 and IC20, provide power for the processor board and serial communications, respectively.

On power-up, the Z80, SIO, and CTC are reset by the combination of R8, C13, D1, and Schmitt triggers IC17B and IC17C. Diode D1 provides a discharge path for C13 allowing the power to be cycled on/off/on fairly rapidly and still generate a reset pulse. This diode also avoids potential reliability problems, resulting from C13 attempting to discharge through the input of IC17B when power is turned off.

Power Supply. Two separate 5-volt power supplies are used in the race timer; one for the processor and related circuitry and the other for the serial interface and start and stop sensors. The power transformer, T1, has two 10-volt secondary windings that feed separate bridge rectifiers, BR1 and BR2. A 5-volt regulator, IC1, provides the supply voltage for all on-board circuitry except for the opto-isolators associated with serial communication and the start-sensor comparator, IC13A. The second 5-volt regulator, IC20, provides power for the serial data opto-isolators IC10, IC11, IC12, IC14, IC15, and IC19; the start-sensor comparator, IC13A; and the start and stop sensors. The reason for two 5-volt supplies is that it provides isolation (separate grounds) between all on-board circuitry and all off-board circuitry and signals. Since the remote display may be connected to the master timing unit by a long cable, there is the real possibility of noise getting induced into the power and ground lines in the cable. With separate supplies, the coupling of power and ground noise into the on-board circuitry is greatly reduced.

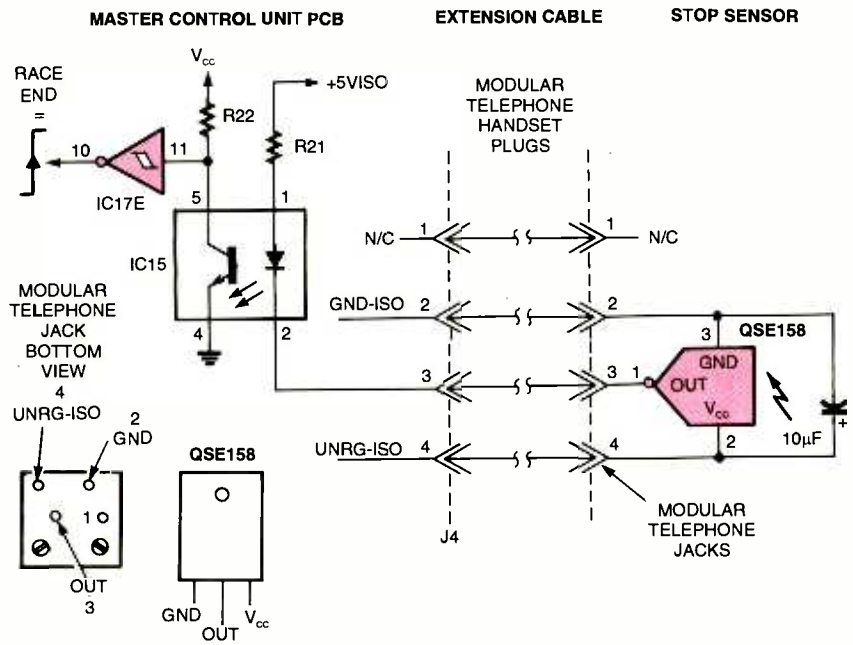

Fig. 3. A second telephone handset cable connects the stop sensor to the Master Control Unit PCB. Keep the leads short on the 10-µF capacitor.

Start Sensor Description. Figure 2 is a simplified schematic showing the start sensor and its connection to the comparator, IC13A. The start sensor consists of a moveable, permanent magnet and a stationary, normally open, reed switch. The magnet position is adjusted so that when the starting gate just barely releases the race car, the reed-switch contacts close. The closed contact discharges C21 through R13. When the voltage at the inverting input of IC13A drops below 2.5-volts, the output of the comparator on pin 1 goes high, causing a rising edge on the output of the opto-isolator IC14. This rising edge signifies race start to the processor. The low-pass filter composed of R13 and C21, the 2.5-volt threshold on IC13A, and opto-isolator IC14 are all used to guard against noise that may be present on the long wires going out to the start sensor. Figure 3 shows the placement of the start sensor (reed switch), magnet, and extension-cable connector. Standard four-conductor telephone cables with

www.americanradiohistory.com

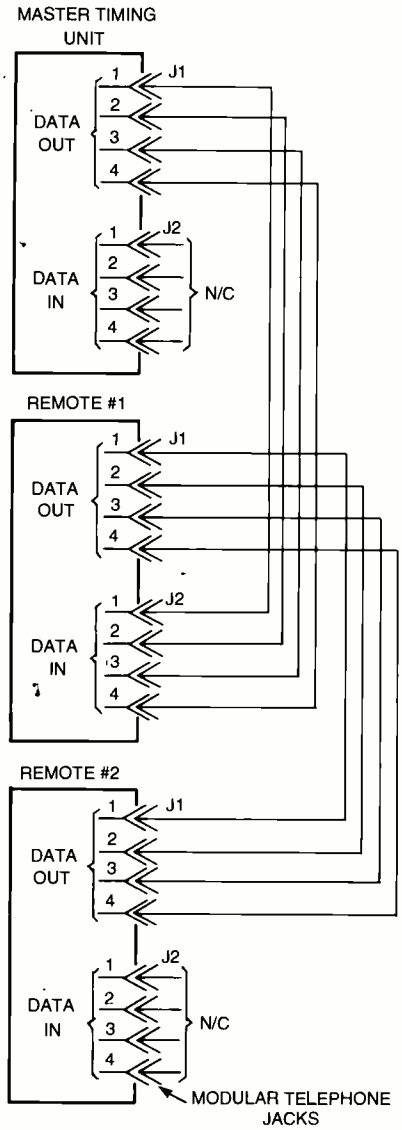

Fig. 4. Telephone handset extension cables are plugged in as shown to interconnect a master and remote display.

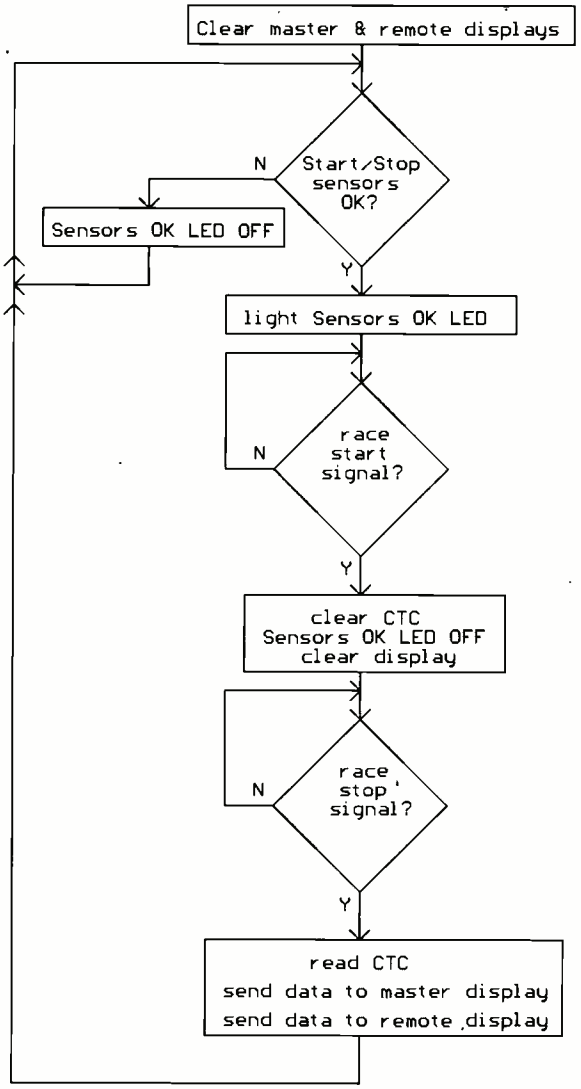

Fig. 5. The main loop is constantly executed by the processor and is responsible for the checking of start and stop sensors and the sending of elapsed-time data to the displays.

handset connectors connect the start and stop sensors to the control unit. This arrangement makes for reliable connections and easy disassembly after the races are finished.

Stop-Sensor Description. Figure 4 shows the connection of the stop sensor to the control unit. The stop sensor is an optically driven switch (QT Optoelectronics QSE158) that is mounted in the race track at the finish line. The sensor is mounted on the bottom side of the track and looks up through a hole in the track to the incandescent light that is shining down from above. A car at the finish line blocks the light path, resulting in a rising edge at IC17-10, which signifies race end to the processor. Several aspects of the design insure high noise immunity—the stop sensor has an on-chip voltage regulator and Schmitt-trigger circuitry, the use of optoisolator IC15, and Schmitt trigger IC17E. The center photo on page 38 shows the over-track light source and the location of the hole for the stop sensor. The top-right photo on page 38 details the placement of the stop sensor, 10 µF decoupling capacitor, and extension cable jack.

A two-channel universal asynchronous receiver/transmitter (UART or SIO) chip, IC4, is used for three functions. First, channel A in the master timing unit serially sends the race-elapsed time to the remote display. Second, channel A handshaking lines (CTS and DCD) receive signals from the start and stop sensors, respectively. Lastly, channel B is used by the remote display as an input to receive the serial race-elapsed time from the master timing unit. Channel B is not used by the master timing unit. The software has been written such that numeric data received by SIO B, via the data-in connector, is also sent out the data-out connector to SIO A on the downstream unit. This means that it is possible to use more than one remote, if desired. The master timing unit has been tested with two daisy-chained remote displays interconnected. The interconnections are made using four-conductor telephone cables with telephone handset plugs. At the conclusion of a race, the race-elapsed

www.americanradiohistory.com

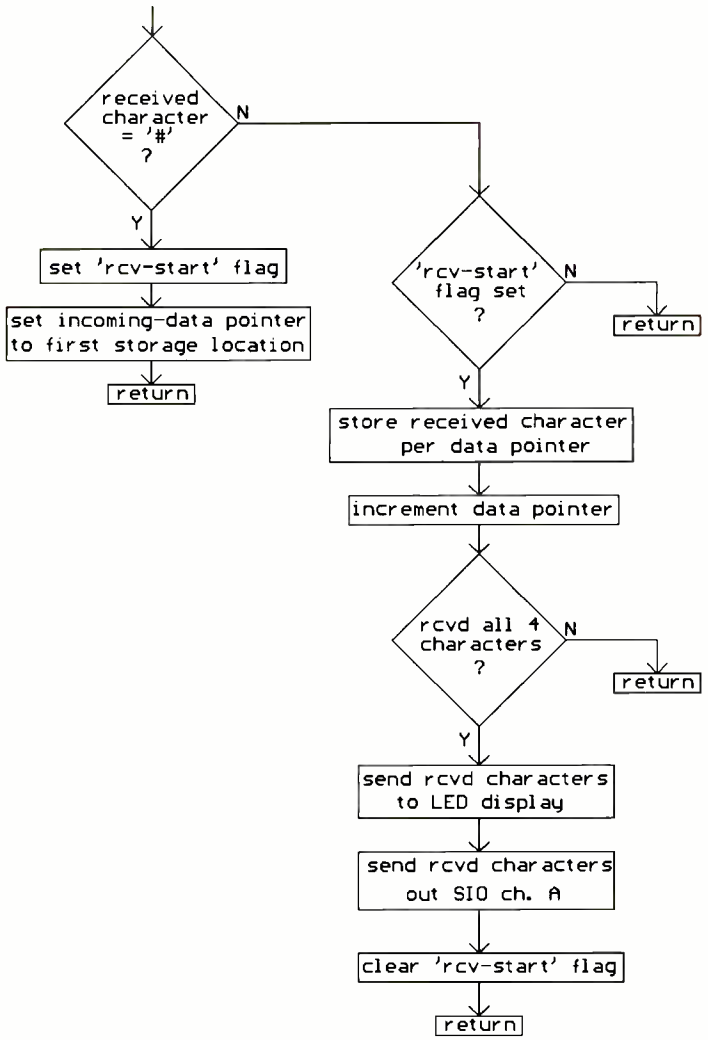

Fig. 6. The interrupt routine is only executed by remote(s) and is responsible for sending received characters to the display and also out the serial port to down-stream remote(s).

time is serially sent at 600 baud by IC4 out connector J1 to the remote display(s). The data transmission consists of six characters—the number character followed by five numbers, most significant digit first and least significant digit last.

Software Description. The software consists of two modules—a main loop and an interrupt routine (interrupt on received character). Figure 5 is a simplified flow chart of the main loop. Keep in mind that the master and remote units both have identical software. The difference in their operation is due to the master timing unit only executing the main loop, while the remote executes the main loop and the interrupt routine. As shown in Fig. 5, the processor first checks to make sure that both start and stop sensors are in their proper state prior to race start. This means that the starting gate must be in the up position (read switch open) and the stop sensor uncovered (light reaching the stop sensor). With both sensors satisfied, the processor lights the sensors' OK LED, signifying that the timer is ready for the race to start. The processor is then placed in a tight loop waiting for receipt of a race-start signal. Upon receipt of race-start, elapsed-time counter, IC3, is reset to zero, the sensors' OK LED is extinguished, and both master and remote displays are blanked. The processor is then placed into another tight loop waiting for the stop signal. After the stop signal is received, the race-elapsed time is acquired by reading the CTC. This binary data is converted to BCD and first sent to the master display and then sent serially to the remote display.

There are two different software versions to chose from. Version 1.2 offers .001 second (1msec) resolution, and version 1.1 offers .00025 (250µsec) resolution.

With the four-digit display available in this design and version 1.2 software, the maximum displayed race-elapsed time is 9.999 seconds. To achieve finer resolution with version 1.1 software, it is necessary to break the displayed elapsed time into two pieces. For example, if the lapsed time is 5.40125 seconds, the master display will show 5.410 for two seconds and then 25 for two seconds and 5.410 for another two seconds and 25 until the start of the next race. You may be asking why offer two different resolutions? The answer lies in the trade-off between avoiding ties and the increased scorekeeper work load of dealing with the more complex display of the race-elapsed time. The author has used this timer successfully in several hundred races. So far, there have been no ties, but in one derby the closest two cars were separated by only .001 second (1msec). So you can see that with version 1.1 software the odds of a tie are reduced even further.

Please note that with version 1.1 software, the remote only displays the time to the nearest .001 second. This has two advantages. The spectators are not confused by a display that would be alternating between two sets of numbers and secondly, if for some reason the scorekeeper got distracted at the end of the race and didn't write down the changing numbers on the master, he would only need to look up at the remote to get the time to the nearest msec and then at the master to get the last ¼ msec. For example, if the race-elapsed time is 5.41025 seconds, then approximately six seconds after the end of the race, the master display will continually show 25 and the remote will show 5.410. This display will remain until the start sensor is activated again—for this reason, it is important that the starter not proceed until told to do so by the scorekeeper. As you can see, it is strongly recommended that version 1.1 only be used in systems that include the remote dis-

www.americanradiohistory.com

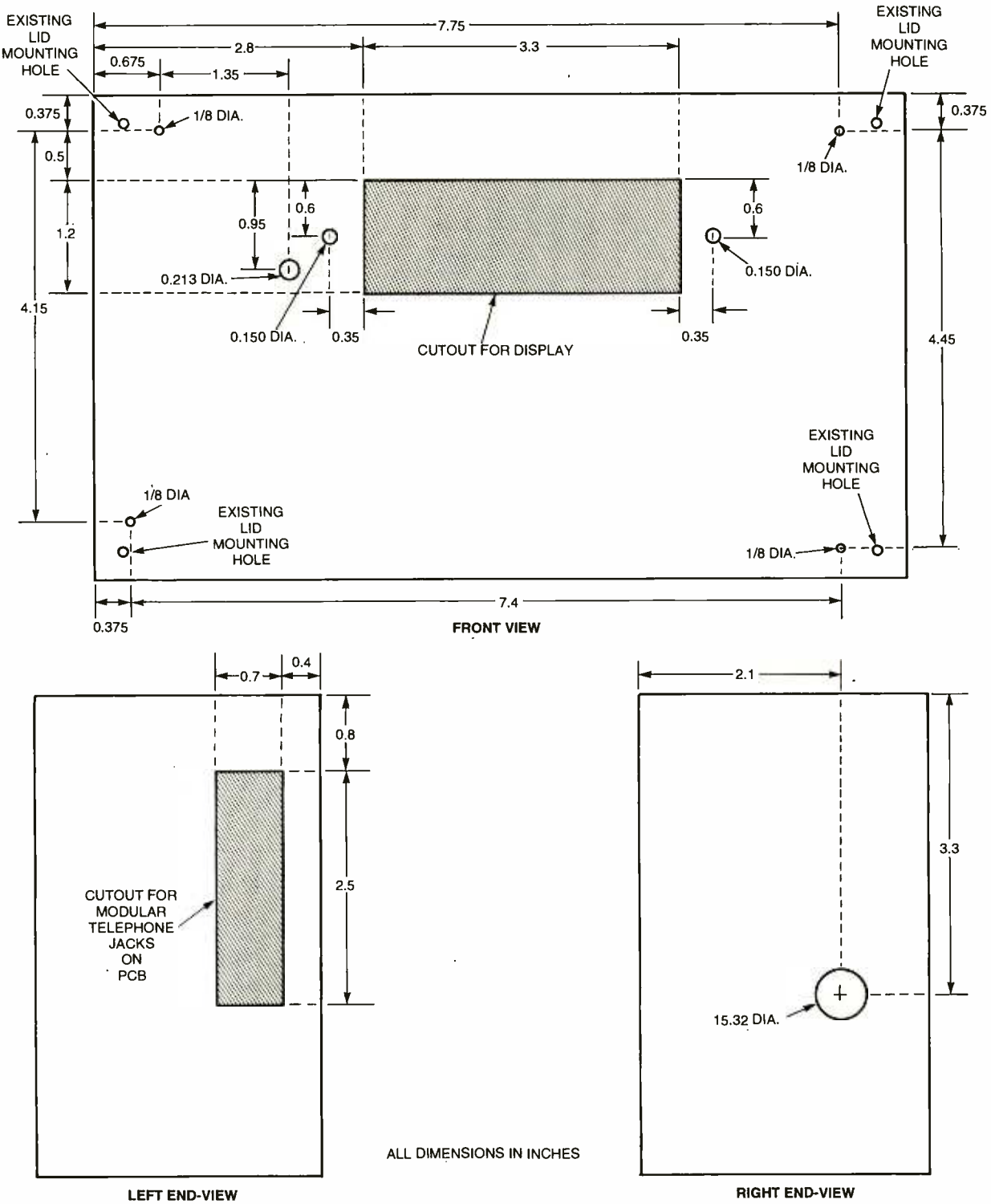

Fig. 7. This drawing will guide you in drilling the enclosure holes and cutouts. Follow the dimensions carefully to insure that everything lines up when the circuit board is fastened to the enclosed lid.

play.

EPROM IC8 contains the software, or more properly firmware, for this project and must be programmed before use. If you would like to program your own EPROM, the software may be downloaded from the Poptronics FTP Web site, *ftp.gernsback.com/pub/pop/timer_1_1.zip*, or *ftp.gernsback.com/pub/pop/timer_1_2.zip*. Alternatively, you may choose to purchase a programmed device from the source shown in the Parts List.

The simplified interrupt on received character flow chart, Fig. 6, shows how the remote processes the race-elapsed time characters that are received from the master. Keep in mind that the processor in the remote is constantly executing the main loop, patiently waiting for a start signal that never arrives. However, channel B in SIO IC4 is

www.americanradiohistory.com

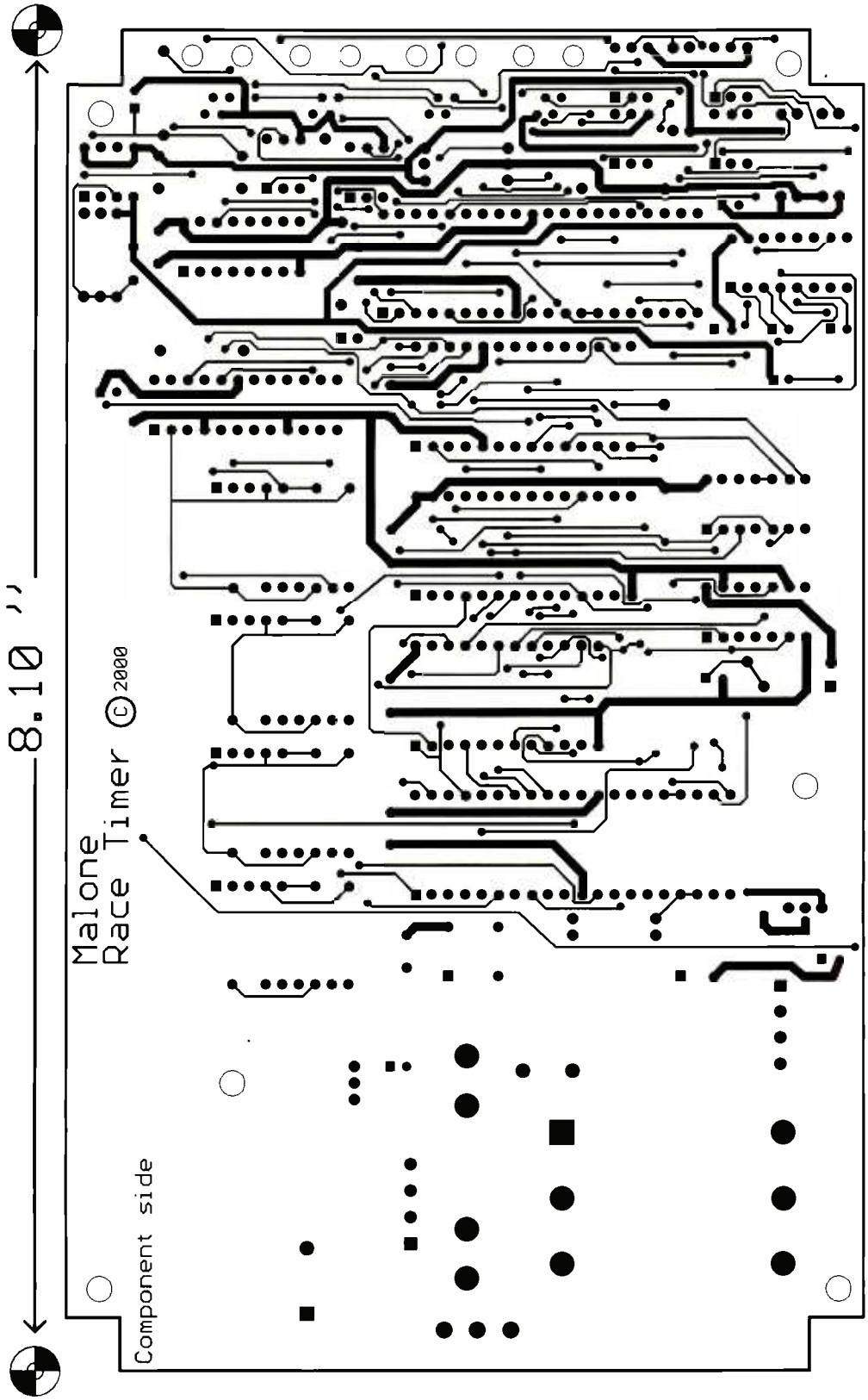

Fig. 8. This is the component-side foil pattern. Note the four notches in the corners of the circuit board that provide clearance between the PCB and mounting-crew bosses on the enclosed lid.

configured to generate a processor interrupt when a serial character is received. This means the master unit does not execute this code as characters are only sent to the remote, not received from it. The remote, however, does receive channel B data from the master. As shown on the flow chart, the first received character is checked to see if it is the number character. The purpose of this check is two-fold. First, in the very unlikely event that noise would induce a character on the remote receive line, it would be rejected by this check. Second, it insures that the race-elapsed time characters are stored in memory in the correct order. After all four digits are received, the DISPBCD routine is called. This routine is used by both the master and remote to send BCD data to their respective four-digit displays.

Enclosure And Extension Cable Construction. Figure 7 shows the location and size of all enclosure holes and cutouts. The printed circuit board, described later, is designed to fit snugly inside the enclosure specified in the Parts List, thus resulting in connectors and displays that line up properly with the enclosure holes. Be sure to center punch all of the hole locations before you start drilling. The rectangular holes for the display and connectors can be roughed-in by drilling a series of closely spaced holes around the perimeter and then filling the enclosure to their proper sizes.

Three extension cables are needed (only two if the remote display is not used). One cable is used for the start sensor to master connection, seen in Fig. 2, one for the stop sensor to master connection, and one for connecting the master to the remote. As

www.americanradiohistory.com

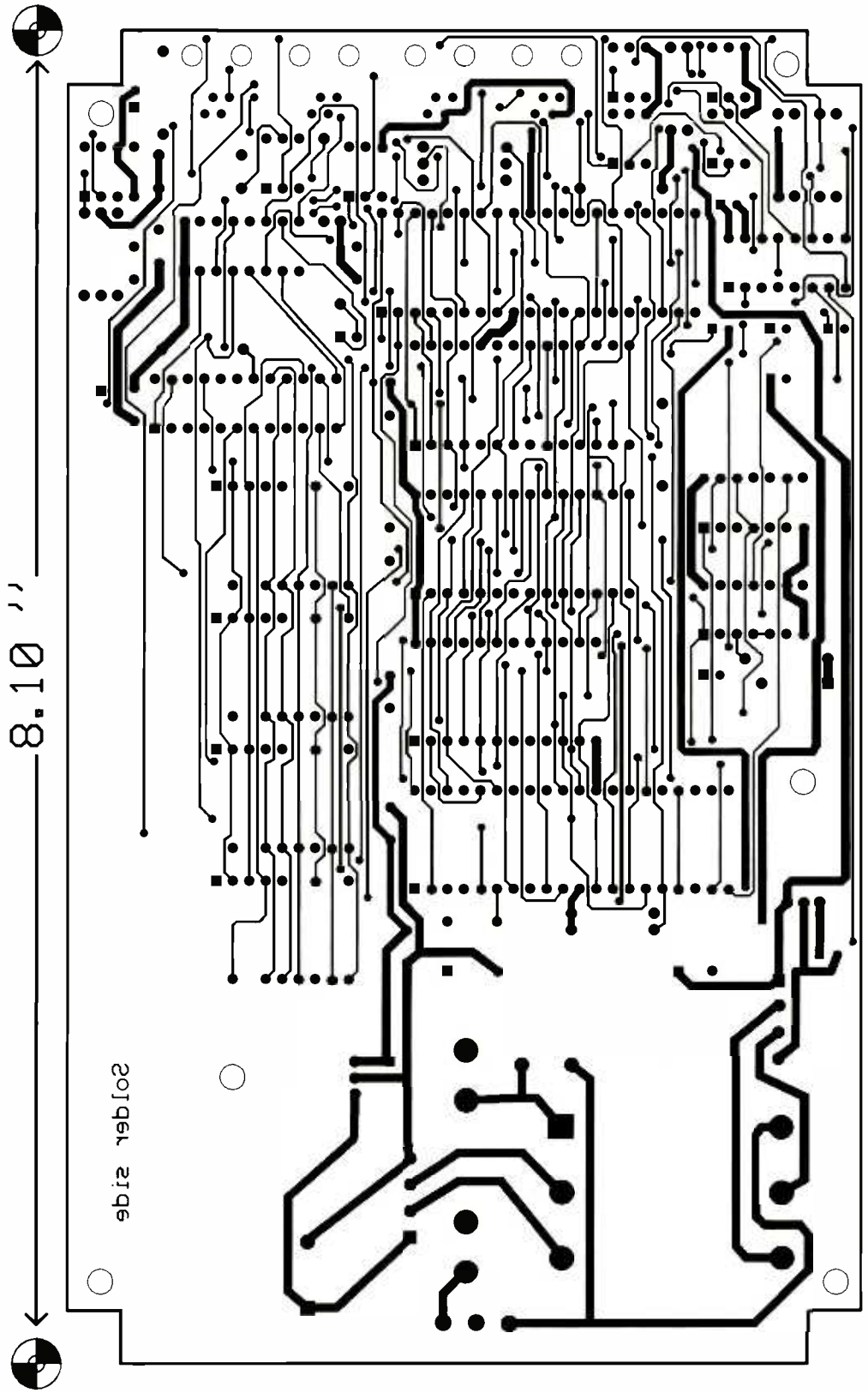

Fig. 9. Above is the solder-side foil pattern for the double-sided circuit board.

you can see from these three drawings, all three cables are electrically the same (i.e., pin 1 connects to pin 1, pin 2 to pin 2, etc.).

Typically, the distance from the finish line (stop sensor) to the scorer's table (master timing unit) is significantly shorter than from the master to the remote or start sensor to the master. Resist the temptation to make this cable the same length; you won't have to label them as to which one goes where. Also, if you make a spare cable (highly recommended), it can then be used to replace any of the three extension cables.

You can purchase extension cables from any telephone accessories store. Just make sure to get cables that are for use on telephone handsets. However, it is recommended that you put your own together. The reason for this comes from Murphy's Law—if it is possible for someone to step on and break a connector, it will happen at the worst possible time. It is much quicker to use your modular-crimping tool to install another pug than it is to run around on a Saturday morning looking for a pre-made cable. Refer to the Parts List for sources of telephone plugs, cable, and crimping tools.

Start-Sensor Construction. As shown in Fig. 2, the start sensor is very simple and consists of a reed switch and permanent magnet. It is strongly recommended that you use an enclosed reed switch like those used in burglar alarms. The glass housing on reed switches is fragile, and there are two big advantages to obtaining an enclosed unit. First, the possibility of mechanical damage is greatly reduced and also, the enclosed units have mounting-hole provisions, which makes their attachment much easier. If you refer to the photo, you will see how small, wood screws are used to

www.americanradiohistory.com

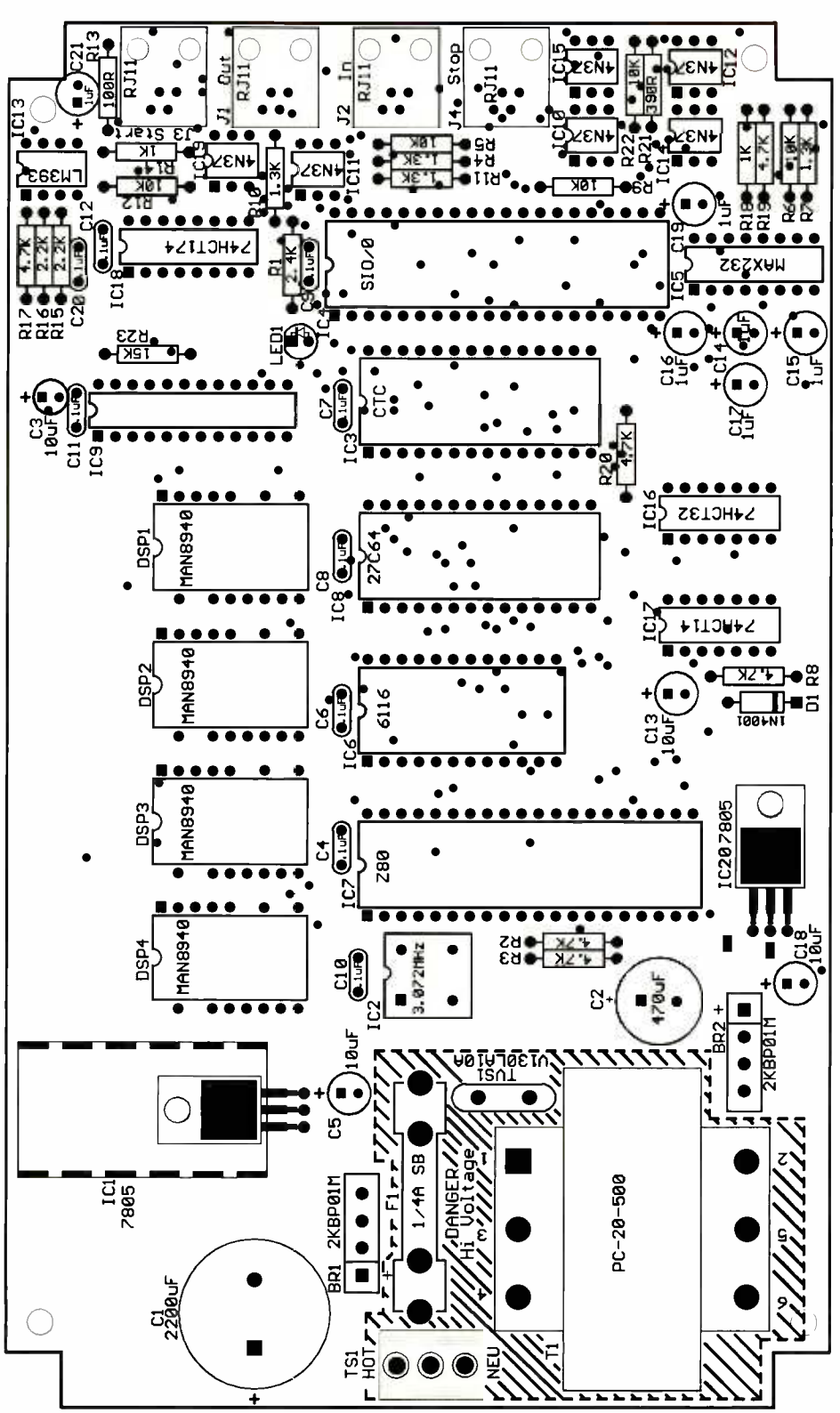

Fig. 10. Here is the component-side silk screen, which also acts as a component-placement diagram.

attach the reed switch housing to the underside of the race track near the start gate. You will need to move and hold the start gate into a position where the race car is just released. Then, determine the appropriate mounting location for the magnet by adjusting its position until you hear the relay click and screw it into place. Solder the two wires from the reed switch to pins 1 and 2 on the modular telephone jack, following the pin-out guide shown in Fig. 2. The modular telephone jack is held against the race track by a clamp composed of two small pieces of wood and a small metal plate with rubber foot attached.

Stop-Sensor Construction. The stop sensor is also very simple, consisting of just an optical switch and capacitor. Observe correct polarity and solder the 10-µF capacitor to the optical switch. Wire the optical switch to the modular telephone jack using the pin-out guide shown in Figs. 2 and 3. Align the light-sensitive face of the optical switch with the hole in the race track located at the finish line. The optical switch/ modular telephone jack is held in place on the underside of the track with the same type of clamp assembly used for the start sensor. The stop-sensor clamp assembly also serves to protect the stop-sensor components from damage since they are located between the race track and the floor. A photo shows the over-track light source shining down on the track at the finish line. Make sure to use an incandescent light source, since the 60-Hz on/off flicker characteristic of fluorescent lights could cause problems. A simple shield confines the light to the track and not spectator's eyes.

Circuit-Board Construc-tion And Test. Due to the number of circuit connections in the race timer, it is recommended that a double-sided PC board be used. However, if you are careful, it would be possi-

www.americanradiohistory.com

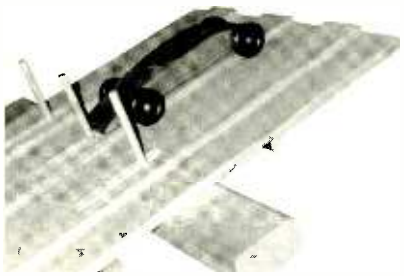

The start gate is shown with the car-holding fingers in the full upright position. The end of the start-sensor reed switch is just visible on the right side of the track.

ble to use other construction techniques, such as perf board or wire wrap. If you choose to make your own PC board, refer to Fig. 8 for the component-side etch and Fig. 9 for the solder-side etch. After you have either etched and drilled your own PCB or purchased one from the supplier shown in the Parts List, it is time to start the actual assembly. Use the parts placement diagram in Fig. 10 and the silk screen on the PC board (if you purchased it) to guide you in placing the parts. It is strongly recommended that IC sockets be used for all ICs as this makes testing and IC replacement MUCH easier. To make it more convenient to handle the board during assembly, install the short, lightweight components first, such as resistors, diodes, and IC sockets. Save the electrolytic capacitors, bridge rectifiers, and power transformer for last. Don't install the ICs in their sockets until instructed to do so. Make sure you install the four seven-segment displays and LED on the SOLDER side of the PC board. The LED should be spaced

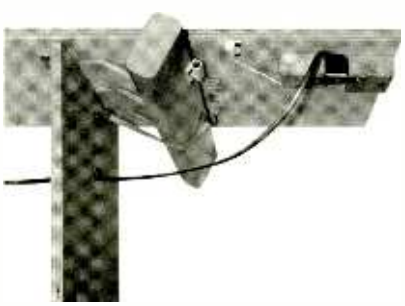

This photo is an under-the-track view and shows how the start-gate components are arranged. The car-holding finger has just released the car and the moveable magnet is in the proper position to cause the stationary reed-switch contact to close.

up from the circuit board approximately 4/10-inch so that it can stick up through the hole in the front panel. Install ½-inch long nylon spacers in the corners of the PCB, on the component side. These spacers are used to fasten the PCB assembly to the enclosure lid. Use thermal grease when mounting the heatsink to IC1. Attach the AC line cord wires to the terminal strip at TS1. Double-check component placement and polarity before proceeding to checkout. Figure 15 is a picture of the completed circuit board.

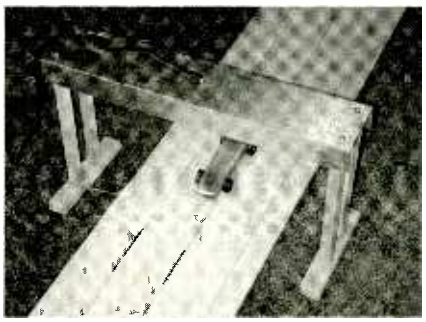

The front of the race car is not quite in position to block the light path between the light above and the under-track stop sensor. The cable for the stop sensor can be seen entering from the left side of the track

Safety Notice. Before applying power, keep in mind that dangerous voltages are present due to the race timer's connection to the AC power line. Keep your fingers and hands away from the fuse clip, AC hot and neutral connections, and the transformer primary! This area is marked on the printed circuit board silk screen. When probing the PCB, use only DVM test leads and/or oscilloscope probes that are in good condition, with no cracked insulation, etc.

Checkout. After you are finished stuffing the circuit board (don't put the ICs in their sockets yet), you are ready to start the checkout process. Plug in the line cord into an AC outlet and use a DVM or oscilloscope to check the main +5-volt supply (VCC) by confirming +5-volt ±.2-volt across C5. Next, check for +5-volt at all ICs—refer to the schematic to determine which pins are connected to VCC and GND. Next, check the +5-volt isolated supply (+5-volt ISO) by measuring across C18 and confirming the presence of +5-volt ±.2-volt. With power off, insert the oscillator, IC2, into its socket. If an oscilloscope is available, apply power and confirm the presence of the 3.072-MHz signal at IC7-6. Otherwise, with the power off, insert all of the ICs into their respective sockets, apply power, and observe 0.000 on the LED display. Plug the start sensor into J3 and the stop sensor into J4. Illuminate the stop sensor with an incandescent light. The sensors' OK LED should be lit. If the LED is not lit it is because one, or both, sensors is in the active state. That is, if the start sensor is active (reed switch closed) and/or the stop sensor is not illuminated, the sensors' OK LED will not be lit. Keep in mind that this LED is not intended to be the ultimate in troubleshooting aids. For instance, if the start and stop sensors are unplugged from the master timing unit, the sensors' OK LED will

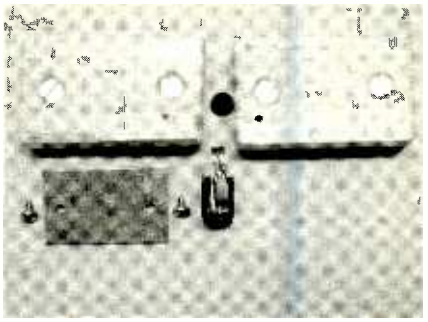

This is an under-the-track view of the stop sensor removed from the track thru-hole, protective wood blocks, and clamping plate. The metal plate firmly holds the phone jack in place so the optical sensor can face the over-track light source.

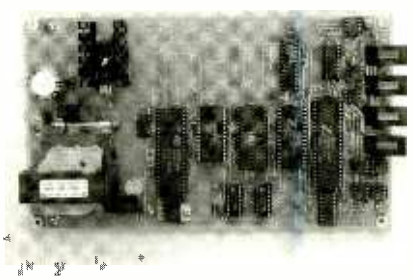

Photograph of the completed circuit board. The AC line connects to the terminal strip on the left side of the board just above the power transformer. This prototype board does not have a silk screen; however, the boards available from the author do have a silk screen with component reference designators, which makes assembly much easier.

www.americanradiohistory.com

PARTS LIST FOR THE DIGITAL RACE TIMER

MASTER REMOTE AND PC

SEMICONDUCTORS

BR1, BR2—100-volt, 2A bridge rectifier (Digi-Key 2KBP01M)
DSP1–4—QT Optoelectronics MAN8940 seven-segment LED display (Mouser)
LED1—2mA LED, Hewlett Packard HLMP-D150 (Allied Electronics)
IC1, IC20—LM7805, +5-volt, 1.5-amp voltage regulator, integrated circuit (Digi-Key)
IC2—Epson SE1219, 3.072-MHz, half-size crystal oscillator, integrated circuit (Digi-Key)
IC3—Z84C3008, CMOS Z80 family counter/timer controller, integrated circuit (Digi-Key)
IC4—Z84C4008, CMOS Z80 family SIO/0 serial controller, integrated circuit (JDR)
IC5—MAX232CPE, RS232 dual receiver-transmitter, integrated circuit (Mouser)
IC6—HM6116-1, 2K × 8 static CMOS RAM, integrated circuit (Jameco)
IC7—Z84C0008, CMOS Z80 microprocessor, integrated circuit (JDR)
IC8—27C64, 8K × 8 CMOS EPROM, 250nS (or faster), integrated circuit (Digi-Key)
IC9—MAX7219, LED display driver, integrated circuit (Digi-Key)
IC10–12, IC14, IC15, IC19—4N37, optoisolator, integrated circuit (Digi-Key)
IC13—LM393, dual comparator, integrated circuit (Digi-Key)
IC16—74HCT32N, quad 2-input, OR, integrated circuit (Digi-Key)
IC17—74HCT14, hex inverter, integrated circuit (Digi-Key)
IC18—74HCT174, hex D-type flip-flop, integrated circuit (Digi-Key)
D1—1N4001, general purpose diode

RESISTORS

(All resistors are ¼-watt, 5% carbon units.)
R1—2400-ohm
R2, R3, R8, R17, R19, R20—4700-ohm
R4, R7, R10, R11—1300-ohm
R5, R6, R9, R12, R22—10,000-ohm
R13—100-ohm
R14, R18—1000-ohm
R15, R16—2200-ohm
R21—390-ohm, ¼-watt, 5% carbon unit
R23—15,000-ohm

CAPACITORS

C1—2200-µF, 25-watt V_{DC}, electrolytic
C2—470-µF, 25-watt V_{DC}, electrolytic
C4, C6–12, C20—.1-µF, 50-watt V_{DC}, ceramic
C3, C5, C13, C18—10-µF, 16-watt V_{DC}, tantalum
C14–C17, C19, C21—1µF, 16-watt V_{DC}, tantalum

ADDITIONAL PARTS AND MATERIALS

F1—3AG, ?-amp, slow-blow fuse (Mouser 5760-13250)
Fuse clip, PCB mount, two each (Mouser 504-1A1119-10)
J1–4—Modular telephone handset jack, PCB mount, four conductor (Mouser 571-5559801)
T1—Dual 10-V_{AC} 1-amp, secondary PCB-mount transformer (Signal Transformer PC-20-500)
TS1—3-pin screw terminal (Mouser 506-5ULV03)
TVS1—V130LA10A varistor (Mouser 570-V130LA10A)
Enclosure—8.46- × 5.12- × 3.27-inch Altec 94.012 (Allied Electronics)
AC-line chord—18 AWG, 3 conductor (Mouser 173-53102)
Line-chord strain relief—(Mouser 561-MP5P4)
Heatsink for IC1—(Mouser 532-551002B00)
Printed circuit board
Display bezel with red filter—(JMJ Technical Products 1-358-R60)
Standoffs—½- × ¼-inch, nylon, four each (Mouser 561-TSP3)
Miscellaneous hardware, solder, thermal grease
IC sockets—(Mouser)

EXTENSION CABLE PARTS

Optional modular crimping tool—one each (Jameco 116097)
4-conductor modular telephone cable—(Mouser 172-UL4010FT)
4-conductor modular telephone handset plug—two each (Mouser 154-UL6164)

START-SENSOR PARTS

Reed switch and magnet pair—one each (Mouser 507-AMS-10WS)
Wood screws—eight each
Modular telephone handset jack, PCB mount, 4-conductor—one each (Mouser 571-5559801)
1- × 2-inch wood blocks—two each
1- × 2-inch sheet metal—one each
Rubber foot—one each (Mouser 517-SJ-5023BK)

STOP-SENSOR PARTS

Optional sensor—QT Optoelectronics QSE158 (Mouser 512-QSE158)
10-µF, 16-volt V_{DC}, tantalum capacitor
Rubber foot—one each (Mouser 517-SJ-5023BK)
Incandescent light with stand and light shield

SOURCE INFORMATION

Allied Electronics; 800-433-5700
Digi-Key; 800-344-4539
Jameco; 800-831-4242
JDR; 800-538-5000
JMJ Technical Products; 908-233-7038
Mouser; 800-346-6873
Signal Transformer; 516-239-5777

The following parts are available from D. Malone, P.O. Box 1542, Battle Ground, WA 98604 (e-mail, dmalone@pacifier.com): Complete kit of all parts including silk-screened, solder-masked circuit board, programmed 26C64, machined enclosure, and parts for start and stop sensors ($165). Kit does not include incandescent light source or stand, or sensor clamps. Pro-grammed 27C64 EPROM ($7). Com-mented source code on IBM 3.5-inch disk ($19.95). Silk-screened, solder-masked circuit board ($25). On complete kit or programmed 27C64 orders, specify 1-mS resolution (firmware version 1.2), or ?-mS resolution (firmware version 1.1). Please add $5 to all orders for shipping and handling. Washington state residents add sales tax.

be lit, since neither sensor is in their active state. The intention of this diagnostic aid is to alert the scorekeeper that the start gate is not fully retracted to the car-holding position or a race car has inadvertently been left at the finish line, thus obscuring the start sensor.

Bring a magnet into close proximity to the reed switch, and when the reed switch closes the display should read ——-. Next, cover the stop photosensor with an opaque object and the display should then display the elapsed time between reed switch closure and light blockage. Keep in mind that the maximum time that can be displayed is

www.americanradiohistory.com

WHY USE A 3.072-MHz OSCILLATOR?

The oscillator frequency for this project was driven by two requirements. First, it was decided that the race elapsed time needed 250-µS resolution. This means that there must be a source of 4-KHz pulses (? kHz = 250µS). Therefore, the CTC needed to receive an oscillator frequency that could be divided by an integer and result in a 4-KHz pulse train. 3.072 MHz divided by 768 yields 4 kHz. CTC channel 0 is used for this purpose.

Second, the SIO needed to be fed by an oscillator frequency that would yield a standard baud rate for serial communication to the remote display. CTC channel 1 is used to divide 3.072 MHz by 320 to yield 9600 Hx. With the SIO, IC4, programmed for a 16X clock, a SIO clock frequency of 9600 Hz results in a serial data rate of 600 baud.

9.999 seconds.

If you experience difficulty in getting the unit to work, check for these common assembly-related issues.

- Check for proper orientation on polarity-sensitive components, such as electrolytic capacitors, diodes, and ICs.
- Look for bent IC pins that don't make contact with their socket pins.
- Look for cold solder joints, or where excessive solder has inadvertently connected two adjacent pads
- Use your finger to locate hot components. Use good judgement. Lightly and quickly place your finger tip near ICs and polarized capacitors. For example, an electrolytic capacitor that is accidentally installed backwards can get VERY hot and power needs to be turned off immediately!

Using The Timer. Mount the remote display, if used, six or seven feet off the ground on a suitable stand or shelf. This will provide maximum visibility for the spectators. Place the master timing unit on a table near the finish line, in line with the race track. At this location the scorekeeper can see and communicate with the person placing the race cars on the start gate. Plug the start-and-stop extension cables into the appropriate sensor and jacks on the master timing unit. Refer to Fig. 8 for master timing unit to remote display connections. Position the incandescent light source over the finish line and turn on the light. Plug the master timing unit and remote display into AC outlets and place a race car at the start gate. With the start-gate in the car-holding position and the stop sensor illuminated, the sensors' OK LED should be lit. Give the go-ahead signal to the starter, release the race car, and the race is on! During the race both the master and remote display ——. When the car blocks the light beam at the finish line, both displays immediately display the race-elapsed time. Refer to the software description for display differences between version 1.1 and 1.2 software.

It is recommended that the scorekeeper and starter run a few cars though before the start of the actual derby. These practice runs will help establish the necessary information exchange between the two race officials. For example, the starter will tell the scorekeeper the number of the car that is about to race, and the scorekeeper will signal to the starter when he is ready and the sensor's OK LED is lit.

When the remote display is used, after just a few races the spectators will quickly develop a feel for what is a good elapsed time. Soon you will hear cheers from people that can only see the remote display due to the crowd that inevitably swarms around the finish line.

Parting Thoughts. Since Pinewood Racing occurs during only a small portion of the year, you may want to use the master timing unit for other purposes during the remaining time. For instance, by taking advantage of the serial communications capability, you could use the unit as a remote display. As an example, a remotely-located thermometer probe is under development that will send serial data to the Master Timing Unit, thus providing an easy-to-read temperature display. P

Great consumer information is a shoe-in with our free Catalog. Call toll-free 1 (888) 8-PUEBLO or go to www.pueblo.gsa.gov.

Introducing Robotics with Lego® Mindstorms™

For Robot Lovers. Shows how to build a variety of increasingly sophisticated computer-controlled robots using the brilliant Lego mindstorms Robotic Invention System (RIS). Covers the fundamental building techniques needed to construct strong and efficient robots. Explains to the reader how robot control programs may be simply constructed on their PC screens. Detailed building instructions are provided for all the robots featured. 270 pages, 71/2 x 10 5/7 in. **$19.99.** Plus $2.45 shipping in U.S. Order from CLAGGK Inc., P.O. Box 12162, Hauppauge, NY 11788 **CLX1**

***Get your copy of the* CRYSTAL SET HANDBOOK**

Go back to antiquity and build the radios that your grandfather built. Build the "Quaker Oats" type rig, wind coils that work and make it look like the 1920's! Only **$10.95** plus **$4.00** for shipping and handling. **Claggk Inc., PO Box 12162, Hauppauge, NY 11788.** USA Funds ONLY! USA and Canada—no foreign orders. Allow 6-8 weeks for delivery. MA01

CRYSTAL SETS: VOLUME V.

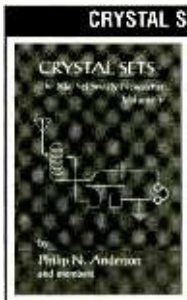

Volume V of the Society newsletter includes six issues ending November 1995. Great for new members to get current, those wanting a bound copy for their reference bookshelf, or as a gift to get a friend started. Contents include: The Design of Unpowered AM Receivers, Radio Outfit in a Headset, A Crystal Set Revisited-Reconstructed, Grounded Loop-stick Tuner, The Matching Secret, and lots of membership correspondence. 8½ × 5½ paperback, **$10.95 plus shipping.—Electronic Technology Today Inc., PO Box 240, Massapequa Park, NY 11762-0240.** US funds only. Allow 6-8 weeks for delivery. MA06

www.americanradiohistory.com

mailto: q&a@gernsback.com

Resistor Voltage Ratings

Q *I have noticed a mistake in many of your circuits that is quite dangerous, particularly in circuits using high voltages. Everyone knows that capacitors have voltage ratings and resistors have power ratings. But did you know that a resistor also has a voltage rating?*

You may be wondering how a resistor can have a voltage rating. As it turns out, this value does not refer to the resistive element but rather the resistor's insulation. If this value is exceeded, the insulation will break down or cease to be insulating. In fact, the insulation would now have a low resistance and the resistor would now consist of two resistances in parallel, the original element resistance and the altered insulation resistance, which will greatly change the resistor's value. Many resistors have ratings of only around 100 to 500 volts.—Donald Taylor, Jr.

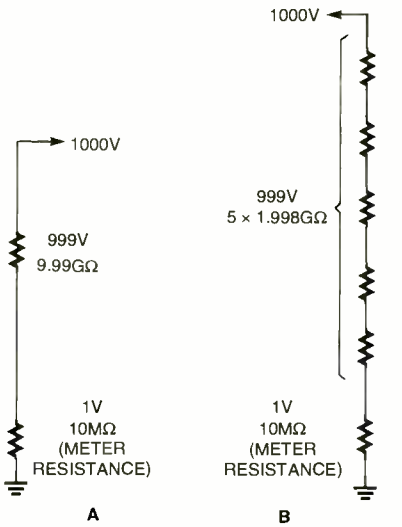

Fig. 1. A single, high-value, high-voltage resistor (a) is needed when the meter forms a part of the voltage divider. Multiple resistors that have a lower voltage rating (b) can be placed in series as a substitute, spreading the applied voltage out over several resistors.

A It may seem to be hopeless finding resistors that can be used at voltages above 500 volts, but special high-voltage resistors do exist, used in such things as Geiger counters and electrometers. They are really neat looking, the resistive element enclosed inside a cylindrical glass envelope. They may be found with extremely high resistance values and very high voltage ratings. Such resistors must be handled with care as fingerprints can alter their value.

For high-voltage circuits, the use of special resistors and wire is essential, and high-voltage construction practices must be followed.

Donald, in this day and age of solid-state devices, we've forgotten that we need to be careful of the components and wiring practices used when working with higher-voltage circuits. It is good that you brought up this subject. Ham radio operators who "rolled their own" transmitters and linear amplifiers were usually aware of those circuit-design considerations since they were routinely working with anywhere from 300 to 5000 volts. These days, we still need to take caution when working with any circuits using voltages in excess of around 200 volts, especially those using laser tubes, magnetrons, klystrons, traveling wave tubes, cathode ray tubes, x-ray tubes, and transmitting tubes. If it's filled with a rarefied gas or a vacuum, it'll likely involve a high voltage somewhere.

Like hams of yesteryear, we hobbyists don't often have the financial resources to spring for special resistors and usually make do with substitutes. Sometimes, there is no substitute. A good example of this is the 1090-megohm resistor in a 20,000-volt divider probe used with old vacuum-tube voltmeters and the high-value resistor in the high-voltage accessory probes of newer digital multimeters. These probes are designed for poking around TV picture tubes. It's nearly impossible to spread 1090 megohms over a five-inch length using off-the-shelf resistors. Past issues of the *ARRL Handbook* have had high voltage probes made that way, but for the slightly lower voltages found in transmitters and linears.

To explain the voltage rating of resistors a bit more, one needs to realize that a standard ¼-watt carbon resistor has maybe 0.2 to 0.3 inches between the leads, depending upon resistor style. Film resistors have metal end caps, so there's no more than 0.1 to 0.2 inches that separates the end terminals of the resistor; and composition resistors are much the same since their leads extend internally into the body of the resistor quite a bit. Of course, a high voltage across the leads of a lower-value resistor will simply burn the resistor up. But across a high-value resistor where the power rating is not exceeded, the voltage could easily arc over between the end caps or internal leads if it's high enough. Circuits like this should be designed with a single resistor that can withstand this voltage or made with series-connected, equal-value resistors where the voltage is divided out equally among all the resistors, such that each will be within its voltage rating.

One of the first places that amateur designers will err is in the area of voltage dividers, especially multipliers for measurement circuits such as meters. Instrument manufacturers use longer, high-voltage resistors, but hobbyists often use standard-sized resistors in circuits designed to knock 1000 volts down to 1 volt or so. That input resistor ends up with 999 volts across it and needs to be made up of several series-connected resistors or a more-expensive high voltage resistor. Five series-connected resistors will

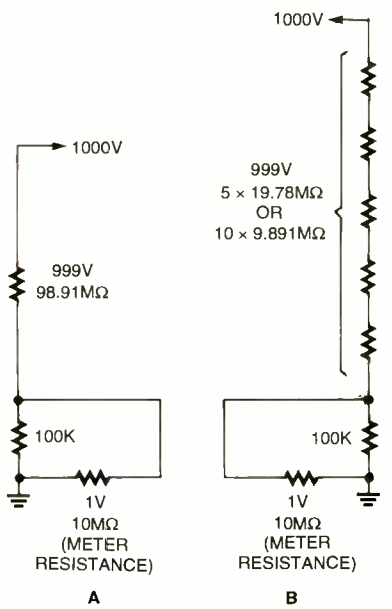

Fig. 2. Two resistors along with the meter's internal resistance can make up a lower-resistance voltage divider so that components are easier to find. Still, a single resistor (a) must have a high voltage rating while multiple resistors in series (b) can have lower voltage ratings since they equally share the applied voltage.

www.americanradiohistory.com

probably do the job, but the precision of the circuit will suffer as you have five uncertainties to deal with rather than just one. A 1-% resistor split into five individual 1-% resistors will end up with an uncertainty of around 2.2%.

If a divider is designed to use the 10M-ohm input resistance of a digital voltmeter as part of the voltage divider, a special 9.99G-ohm resistor will be needed in series, as shown in Fig. 1a. Even when broken into five individual resistors, as shown in Fig. 1b, special resistors will still be needed for the high-value individual 1.998G-ohm resistors required. In cases like this, it's less expensive to use a divider with smaller resistors, adding one in parallel with the meter as shown in Fig. 2a. The values of the five-resistor string are still a little high, but more easily obtainable and might be easier yet if ten resistors were used. One has to be careful with a design like this so that the values don't get so low that the metering circuit imposes a heavy load on the circuit to be measured or that the resistors in the meter divider don't dissipate too much power.

Although it was mentioned that some of our published circuits might have been violating these design rules, I haven't looked for any specific cases. If there were any, I would suspect that it would be in articles or columns where they've been discussing lasers, neon lamp supplies, plasma globes, and other such topics.

HOW TO GET INFORMATION ABOUT ELECTRONICS

On the Internet: See our Web site at *www.poptronics.com* for information and files relating to **Poptronics** and our former magazines (**Electronics Now** and **Popular Electronics**) and links to other useful sites.

To discuss electronics with your fellow enthusiasts, visit the newsgroups *sci.electronics.repair, sci.electronics.components, sci.electronics.design*, and *rec.radio.amateur.homebrew*. "For sale" messages are permitted only in *rec.radio.swap* and *misc.industry.electronics.marketplace*.

Many electronic component manufacturers have Web pages; see the directory at *www.hitex.com/chipdir/*, or try addresses such as *www.ti.com* and *www.motorola.com* (substituting any company's name or abbreviation as appropriate). Many IC data sheets can be viewed online: *www.questlink.com* features IC data sheets and gives you the ability to buy many of the ICs in small quantities using a credit card. You can also get detailed IC information from *www.icmaster.com*, which is now free of charge although it formerly required a subscription. Extensive information about how to repair consumer electronic devices and computers can be found at *www.repair faq.org*

Books: Several good introductory electronics books are available at RadioShack, including one on building power supplies.

An excellent general electronics textbook is *The Art of Electronics*, by Paul Horowitz and Winfield Hill, available from the publisher (Cambridge University Press, 800-872-7423) or on special order through any bookstore. Its 1125 pages are full of information on how to build working circuits, with a minimum of mathematics.

Also indispensable is *The ARRL Handbook for Radio Amateurs*, comprising over 1000 pages of theory, radio circuits, and ready-to-build projects, available from the American Radio Relay League, Newington, CT 06111, and from ham-radio equipment dealers.

Back issues: Copies of back issues of and past articles in **Electronics Now**, **Popular Electronics**, and **Poptronics** can be ordered on an "as available basis" from Claggk, Inc., Reprint Department, P.O. Box 12162, Hauppauge, NY 11788; Tel: 631-592-6721. To ensure receipt of the correct material, readers must supply complete information on the article or issue that they wish to buy.

Poptronics and many other magazines are indexed in the *Reader's Guide to Periodical Literature*, available at your public library. Copies of articles in other magazines can be obtained through your public library's interlibrary loan service; expect to pay about 30 cents a page.

Service manuals: Manuals for radios, TVs, VCRs, audio equipment, and some computers are available from Howard W. Sams & Co., Indianapolis, IN 46214; (800-428-7267). The free Sams catalog also lists addresses of manufacturers and parts dealers. Even if an item isn't listed in the catalog, it pays to call Sams; they may have a schematic on file which they can copy for you.

Manuals for older test equipment and ham radio gear are available from Hi Manuals, PO Box 802, Council Bluffs, IA 51502, and Manuals Plus, 130 N. Cutler Dr., N. Salt Lake, UT 84054.

Replacement semiconductors: Replacement transistors, ICs, and other semiconductors, marketed by Philips ECG, NTE, and Thomson (SK), are available through most parts dealers (including RadioShack on special order). The ECG, NTE, and SK lines contain a few hundred parts that substitute for many thousands of others; a directory (supplied as a large book and on diskette) tells you which one to use. NTE numbers usually match ECG; SK numbers are different.

Remember that the "2S" in a Japanese type number is usually omitted; a transistor marked D945 is actually a 2SD945.

Hamfests (swap meets) and local organizations: These can be located by writing to the American Radio Relay League, Newington, CT 06111; (*www.arrl.org*). A hamfest is an excellent place to pick up used test equipment, older parts, and other items at bargain prices, as well as to meet your fellow electronics enthusiasts—both amateur and professional.

Errors of the Ancients

Q *"Build the Monodigichron" was published in the September 1973 issue of* **Popular Electronics**. *I recently built this but cannot get it to function. I understand there was an "Out of Tune" addressing a problem with this project. It was published quite a bit later than is usual for these corrections. I've checked the Detroit Public Library, but their copies are pretty torn up! Can you help or direct me to a source for this item? Perhaps one of your other readers can help. Thanks in advance for your kind attention to this request.—O.C., via e-mail*

A I'm one of those odd individuals who has saved every electronics magazine he could get his hands on—and then some. I've gone through my stash, looking at both the "Out of Tune" and the "Letters" departments for anything that involved your project and found nothing in the 27 issues after the original project publication. That's a thorough search through every issue through December 1975. See how much time I devote to my loyal readers? I also checked my copies of the annual indices and found nothing. I don't think I've missed anything. If you've built this project and it doesn't work, either it has an original publication error that was never noted or the original circuit is correct and something is wrong with your layout or one or more of the components.

As I went through those magazines, I was reminded that the January and February 1975 issues that featured the introduction of the MITS Altair 8800 computer were at one time selling on e-bay for over $100.

Circuit malfunctions and missing documentation are some of the problems that you can get into if you build something from the "ancient" past. Other problems surface when a project uses a very specific part that is now obsolete or a programmed chip for which the firmware was available only by mail or as a download on a now-defunct bulletin board. I always caution prospective authors to include listings in the magazine if possible and to avoid specialized parts. Their availability through mail order or Internet is short-

www.americanradiohistory.com

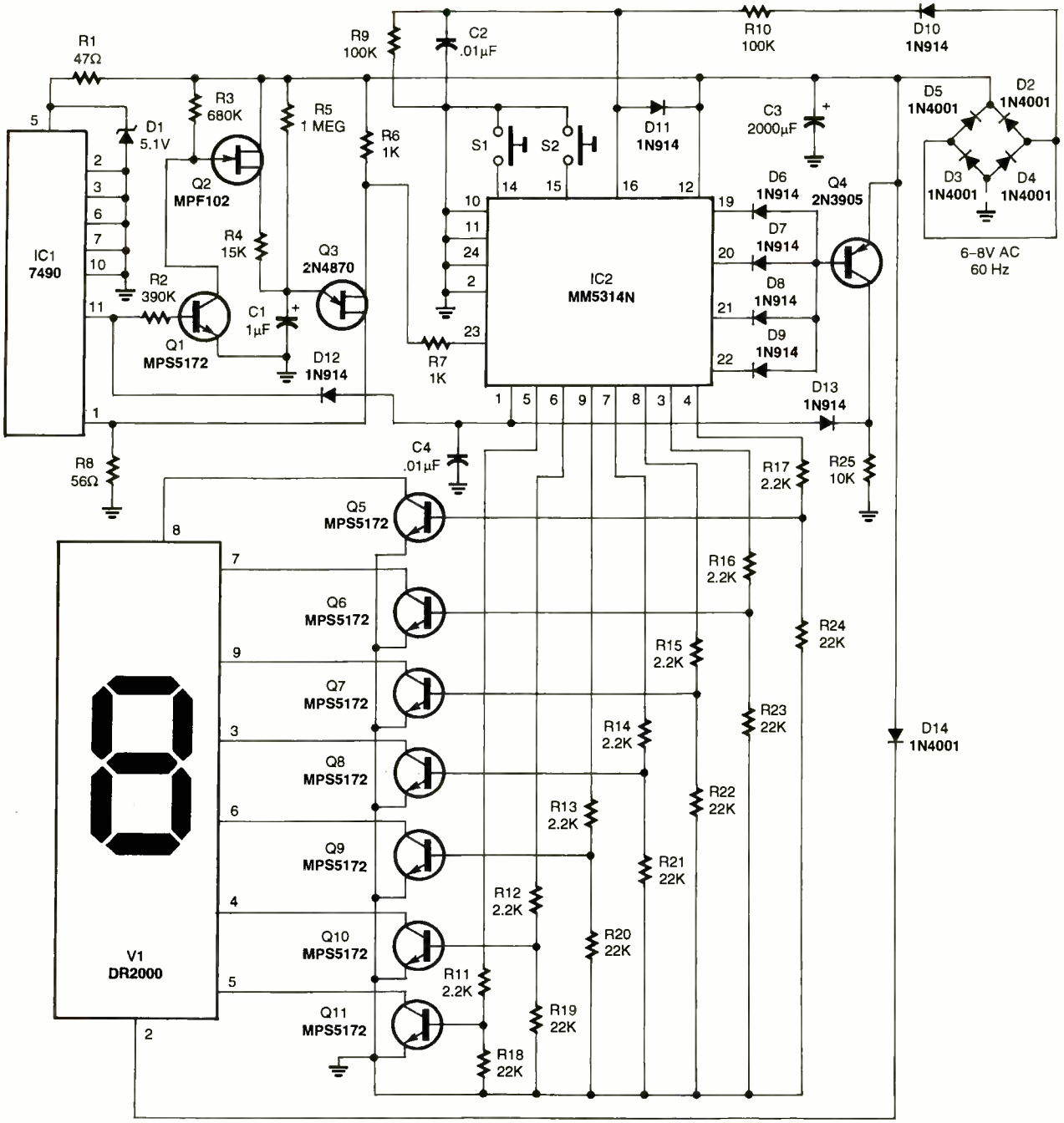

Fig. 3. The "Monodigichron" as originally presented in the September 1973 issue of **Popular Electronics** *is a novelty clock that displays the time using a single 7-segment LED.*

lived in comparison to the eternal archival possibilities of the original magazine article. I'm always in contact with folks who come across old articles or need a copy of an old article they remember from their childhood. Sometimes they're headed down the road to disappointment.

The Monodigichron is a novelty digital clock that displays the time using a single 7-segment digit, scanning through slowly one digit at a time. I'm going to publish a reprint of the schematic in case any readers remember any quirks about the circuit or see anything odd that was missed but not reported. Check out Fig. 3.

Discontinued/Obsolete Parts

Back in 1975, I had a great mail order source for both new and obsolete parts from a company in San Diego. I could buy TTL ICs for a fraction of what they sold for through the usual hobbyist channels. A couple of years later, I ran across an article where the U.S. Marshal Service and/or the FBI had raided and closed down this company because they had been dealing in stolen inventories. Hmm. THAT'S why they were so cheap! And I thought ICs got hot only from reversed power connections.

Several columns ago, the question came up as to where one could purchase parts, especially semiconductors, which were discontinued or obsolete. There are companies out there that, when they hear that a part is being discontinued,

www.americanradiohistory.com

will buy up large inventories of that part and offer it for sale long after it's unavailable through the normal distributor channels. I only knew of one or two sources and asked readers for some input on the subject.

Gary Fortnum responded with a couple of sources. One is Rochester Electronics (*www.rocelec.com*), and the other is American Micro Semiconductor (*www.americanmicrosemi.com*). Gary also mentioned that the Internet site *www.repairfaq.org/REPAIR/F_Obsol_IC.html* is a helpful resource that is maintained by "Service Clinic" author, Sam Goldwasser.

John Power also reported on Rochester Electronics, saying that they call themselves "The World's Most Comprehensive Source of Discontinued Semiconductors."

Alan Wolke tossed out the name of Tom Clemens, who owns Clem-Neff Enterprises (570-595-0647)—a business that has hard-to-find and obsolete components, targeting the amateur radio community.

Gary, John, and Alan, thanks for your informative input. If any more of you readers have additional sources, let us know. Out of several sources, only one may have a particular chip.

Heathkit Clock Chips

In the April 2002 column, a reader asked for a source for the clock chip used in his GC-1107 clock. Three readers have answered the call.

Dick Little mentions that Heath part number 443-848 has the NTE2061 as a substitute, available from most mail-order parts houses.

Bruce Bubello told me that the chip is a National Semiconductor MM5316N and was surprised that this one had failed. In his experience, the MM5316 was a very robust chip. He happens to have one on hand and is offering it to our friend.

Marv Mitich, who has assembled approximately 40 Heathkits over the years, has found that Heath part number 442-848 crosses to a EA7316C with a substitute of NTE2060, ECG2060 or SK3966. I haven't looked up the difference between the 7316 and 5316, but I would guess that they're the same except for the 5316 being a beefier part.

Finally, Theodore Turk mentioned that he has the GC-1005 Heathkit clock that uses the MK5017AA, Heathkit part number 443-601, making it available if it would help out.

I won't even attempt to sort out any of the part number anomalies here, letting those who need the information take care of that task. Thanks to all of you for responding.

Car Flashers

Q *I just read the article in the May issue where several people want to add flashers to their cars. I strongly recommend buying a flasher unit designed for the specific car. Most of the newer cars use a switched negative for the light circuits. If you start adding things using a switched positive circuit, they aren't going to work at best, and you could cause serious damage. The rear lights (brakes) are tied to the antilock brake circuit and flashing the lights can feed back into that circuit causing it to malfunction. This can also feed back into the transmission causing damage. Another plus with commercially available units is that most of them are potted in plastic to protect them from the weather. Please pass this warning on to your readers. As a technician, I know it's fun to build your own circuits and use them. It also saves money if everything is correct and hooked up right.—Jack Price*

A Jack, I'm not sure which "flashers" you were referring to in the May issue. In the "Q & A" column, we were adding controllers for trailer lights, using the auto's brake lights only as input sources, so that wouldn't apply. The "Wig-Wag" circuit was playing with the headlights. I'll agree that we all need to be careful with things when we start playing with the CONTROL of the auto's lights. The anti-lock brakes may take a "we're-hitting-the-brake-pedal" signal from the brake light line, but they'll be doing that ahead of the left-right turn signal diverter circuit if the turn signals are integral with the brake lights. If they didn't, that signal would pulse upon application of the turn signal.

As a side note, electric trailer brake controllers are no longer tied into the hydraulic brake lines as they were in the 1960s. There are two or three systems in use, and one system used by Tekonsha ties into the brake line to let the controller know that the brakes are being deliberately applied while an accelerometer input applies the brake current according to how fast the driver is attempting to slow down. If the brake signal was not used as an initiating signal, the controller would try to apply trailer brakes anytime the driver let off the accelerator or the vehicle pitched forward slightly. Speed bumps would be a killer!

I find it odd that a car manufacturer would try to switch the negative lead since they've been deeply in love with the massive amount of wiring they save by using the chassis for the negative return on everything. I'll have to research that out a bit more to see what's going on there. I'm certainly no auto mechanic.

Your warning didn't go unmentioned as I spent the first two paragraphs of the "Wig-Wag" answer warning of the woes that could befall anyone messing around with the headlights. And in both the January and May columns, I expressed my opinion that a commercial trailer light controller was a better choice than rigging something up, for both reliability and cost. I hate reinventing the wheel, especially when both of those reasons kick into gear.

As I was working on many of these projects, I remembered that a large number of them each year in the **Popular Electronics** issues of the 1960s and 1970s revolved around automotive projects, including a lot of automotive test instruments, ignition systems, wiper controls, voltage regulators, and a circuit to mimic the sequential turn signals of the Cougar and Thunderbird. The more-recent "Add Daytime Running Lights To Your Car" of 1996 was almost a rare article. I think that the complexity of automotive electronics has killed off a lot of these projects. For that matter, that very complexity has satisfied most of those older projects. Today's cars have electronic ignition, electronic voltage regulators, intermittent wipers and such things. And the old tachometers and dwell meters of the past aren't of much use today, as most of us can't mess around with today's complex engine controls anyway.

Playing around with the headlights will be impossible as more and more vehicles begin using the newer versions of mercury-vapor lamps that require exotic electronic controls for fast ignition. And it's only a matter of time before the familiar 12-volt systems give way to 42-volt systems. Starting, braking, suspension, and power steering will be revolutionized. Auto repair shops will close down and the electronics repair shops will have to hire mechanical spe-

www.americanradiohistory.com

cialists to work on the mechanical aspects of the cars that will be brought in for repair.

More on Kelvin Clips

Q *This is in reference to the Kelvin clips that were discussed at some length in the April 2002 issue. For whatever it may be worth, Allied Electronics carries Kelvin clips in their catalog for $7.85 each. They are Mueller part number BU-75K, Allied catalog number 830-4205 found on page 994 of their 2001 catalog or on their Web page at* www.alliedelec.com. *I agree that eight bucks seems like a lot for a clip, but I personally would be willing to pay it to avoid the rather involved process of making my own as described. There's just a couple of 'gotchas.' The $7.85 does not include shipping, and I believe Allied has a $50 minimum order.—Bill Robinson*

A Thanks for that information, Bill. I hadn't really done any checking around for them until you wrote. Since Mueller is a big name in clips and test leads, I took a look at the Newark catalog. There they have the BU-75K clips with gold/silver tip contacts for $12.99 each, catalog number 90F1604. Under catalog number 84F764 they also have BU-78K clips with gold contacts for only $55 each (ouch!). Looking further, they also carry the Pomona 5940 Kelvin clips, which is a set of two clips with four 24-inch leads and a fifth lead for guarding or grounding, all for only $166.27, Newark catalog number 95F1364. These, of course, are intended more for replacement leads on high-end 4-terminal ohmmeters such as those sold by Agilent (formerly Hewlett-Packard) and Keithley. Newark does not have a minimum order amount, but does tack on a $5 service charge for any order under $25, so even though the BU-78K costs more through them, overall they can be cheaper if the clips are all you order or if you find another $12.01 in merchandise to order. Hosfelt is still the winner here at $7.50 each for the clips, although I don't have a catalog handy at the moment to check on their minimums.

In this turn-key world of off-the-shelf ham transceivers, audio equipment and test gear, I don't feel too badly if I spend a couple of hours making my own little Kelvin clips, tedious though the project may be. If I want Kelvin clips as soon as possible, I'll have them in a couple of hours for less than a dollar if I make them or I can wait one to five weeks if I order a commercial pair for twenty bucks. Hobby electronics and home construction is what this magazine and its forebears have always been about. I guess I'm getting fed up with today's instant gratification and feel proud when I can say, "I made those!"

Another Quad Timer

Q *There is, in addition to the NE558, an NE559, both quad timers, but the 559 is a lower power version and has a shorter propagation delay. I really enjoy your column. I grew up with many of the hobby magazines for the novices. It now must be very hard for them to learn about electronics. We have so many parts now only available in surface-mount technology (SMT). Kind of killing the old breadboarding thing.—Jerry Scheltgen*

A I'm glad you enjoy the column, Jerry. I hope it isn't my mistakes that are the most entertaining part! I ran into that problem of an op-amp that was only available in SMT, which was rather irritating. SMT does present a bit of a breadboarding problem. They make expensive little SMT-to-DIP (dual in-line package) converter boards, but those are a bit of a pain to use because you have to solder the SMT IC to the board, which limits the life span of both the IC and the converter board. I'm always making little jigs for such things. I'll have to work on something that will temporarily hold an SO-8 SMT IC in place so that the converter board is more like a tiny breadboard on the big breadboard. I like to breadboard circuits before I build them so that I can get some of the "duh" errors out before committing to a permanent circuit. It seems silly under that same philosophy to breadboard a DIP version of an SMT circuit that you want to construct. I can't conceive of an SMT solderless breadboard that would even work, let alone be as easy to use as our current DIP-compatible solderless breadboards. (Sigh.)

Whine, Whine, Whine!

Q *I use a 12-volt LCD portable screen in my van for the kids to watch movies on the road. I use a home VCR running on a converter that puts out a 110 modified sine wave. I have been sending the sound input into the LCD screen, and at low volumes I have extreme static/engine noise. I put the volume all the way up and use a volume control on the headphones, but the engine whine is still present.*

I am looking for a circuit I can build that would be 12-volt, would amplify the sound so I can send it through headphones, and would have a selectable filter or filters to customize the sound. A volume control would also be nice. The sound input would be from a standard DVD or VCR with RCA phono jacks. Can you help recommend a source or circuit?—D.B., Pittsburgh, PA

A Trouble is, if you're getting that much engine noise into your present system, adding more components probably won't help. You'll really be masking symptoms rather than fixing the problem. I think you need to back up a bit and work on getting rid of the whine. It's obviously getting in through the vehicle's power system since your VCR and LCD are connected together with shielded cable. They ARE connected together with shielded cable, aren't they?

Ham radio operators with mobile installations have been battling automotive electrical noise ever since the Stanley Steamer went out of vogue. The electrical noise has several sources. Contributors are the alternator, ignition system, blower motor, windshield wiper motor, and power windows. The windows are a temporary annoyance, so they're no worry. The biggest sources are usually the alternator and blower motor, and you can tell by the noise you hear what the main culprit is. If it's a high-pitched whine that increases in frequency when you hit the accelerator, it's coming from the alternator. If it's a lower-pitched whine that increases with frequency and intensity when you increase the blower motor speed, then that's the source. The other items can cause havoc for an entire 500-mile trip, so might need attention also. Since there are so many potential noise sources, it can get expensive trying to squelch each one individually. It's easier to get rid of the noises at a bottleneck where they all come together to irritate you: the input to your VCR/LCD combo. Go to your local retail electronics store and see if they have a noise filter for the 12-volt line that feeds your kiddie-tainment system. It may solve your problem. If it doesn't, you may have to get more serious. A stroll to your public library to check out an edition of the *ARRL Radio Amateur's Handbook* (or whatever they're

(Continued on page 50)

www.americanradiohistory.com

PIC-tronics

TJ BYERS

Traffic-Light Logic

A new monthly column for the adventurous who want to take the PIC walk. (If you have to ask, you must read!)

I'm hooked on electronics, and I'm hooked on toys. I'm also hooked on microcontrollers, especially the PIC kind. I love it when the three come together. There's nothing more satisfying than seeing a PIC-based bot miss the kitchen wall for the first time or watching a light bar rock to the beat of a 16F628 program. In fact, anything that brings life to objects through microcontrollers, software, and whim beckons me like a flame to a moth.

In the coming months I will show you some of my pet projects and how they came to be. All are based on the new 16F628 PIC chip, a more robust—and less expensive—version of the popular 16C84/16F84. Each article will provide all the details needed to duplicate the project, including a full parts list and software code.

My ideas for projects come from the darndest places. Things I see every day. Things I'd like to see every day. And things that appear differently to me than to other people. The marriage can take many forms and spans a range from useful to interesting to simply frivolous.

It's the last that gave me the idea for this project: an LED traffic signal. Lights are a lure for me—especially moving lights. That, and the thought of putting the traffic light pattern to the pulse of a PIC, made this project irresistible.

Ground Rules

Everyone has seen a traffic light and takes its operation for granted. If you watch the light pattern carefully, you may be surprised. While you may assume that when the cross-traffic signal goes red, you get an immediate green light, that's not the case. In real life, there is a short period when the lights are red for both directions. This period,

LISTING 1

```
include       <P16F628.inc>
__config  _INTRC_OSC_CLKOUT & _WDT_OFF & _PWRTE_OFF & _LVP_OFF

;====Traffic Light=====
;Author: Tim Hamel
;Date: 3/4/02
;Basic Operation:
;Traffic light loops through a timed sequence.
;Red lights are on at the same time to deal with red light runners.
;======================


;===Declare Some RAM Locations===
d1      equ     0x20
d2      equ     0x21
d3      equ     0x22
dlval   equ     0x23

;===LED Pin Definitions===
#DEFINE     NSRED PORTB,0           ;N/S red light
#DEFINE     NSYEL PORTB,1           ;N/S yellow light
#DEFINE     NSGRE PORTB,2           ;N/S green light

#DEFINE     EWRED PORTB,7           ;E/W red light
#DEFINE     EWYEL PORTB,6           ;E/W yellow light
#DEFINE     EWGRE PORTB,5           ;E/W green light
;=========================


        org     0       ;Reset vector is at 0x0000
        goto    main



;====1 Second Delay========
;Basically, this routine runs loops within loops to "kill" clock cycles.
sec
        movlw   0x3A ;58
        movwf   d1
Delay_00
        movlw   0x4A
        movwf   d2
Delay_01
        movlw   0x4C
        movwf   d3
Delay_02
        decfsz  d3, f
        goto    Delay_02 ;228
        decfsz  d2, f
        goto    Delay_01 ;222
        decfsz  d1, f
        goto    Delay_00

                        ;3977 cycles
        movlw   0x1c
        movwf   d1
Delay_10
        movlw   0x2e
        movwf   d2
Delay_11
        decfsz  d2, f
```

(Listing continued on next page)

www.americanradiohistory.com

```
        goto    Delay_11
        decfsz  d1, f
        goto    Delay_10

                        ;46 cycles
        movlw   0x0f
        movwf   d1
Delay_20
        decfsz  d1, f
        goto    Delay_20

        return
;==========================

dlyn:   movwf   dlval   ;Move delay value to a variable

dly1    call    sec     ;Call 1 second delay dlval times
        decfsz  dlval,f ;Does dlval = 0?
        goto    dly1    ;No
        return          ;Yes, return to main program


main    movlw   0
        tris    PORTB   ;Make PORTB/PORTA outputs.
        tris    PORTA
        clrf    PORTB
;==========================


;===Everything below this line will repeat indefinitely.====
loop

;1===N(orth)/S(outh) Green, E(ast)/W(est) Red ====
        bsf     NSGRE   ;Turn on N/S Green light
        bsf     EWRED   ;Make sure E/W light is Red
        movlw   .15     ;Load value for 15 second delay
        call    dlyn    ;Start delay

;2===N/S Yellow, E/W Red ===

        bcf     NSGRE   ;Turn off N/S Green
        bsf     NSYEL   ;Turn on N/S Yellow
        movlw   .2      ;Load value for 2 second delay
        call    dlyn

;3===N/S Red, E/W Red ===

        bcf     NSYEL   ;Turn off N/S Yellow
        bsf     NSRED   ;Turn on N/S Red
        movlw   .1      ;Load value for 1 second delay
        call    dlyn

;4===N/S Red, E/W Green ===

        bcf     EWRED   ;Turn off E/W Red
        bsf     EWGRE   ;Turn on E/W Green
        movlw   .20     ;Load value for 20 second delay
        call    dlyn

;5===N/S Red, E/W Yellow ===

        bcf     EWGRE   ;Turn off E/W Green
        bsf     EWYEL   ;Turn on E/W Yellow
        movlw   .3      ;Load value for 3 second delay
        call    dlyn

;6===N/S Red, E/W Red ===

        bcf     EWYEL   ;Turn off E/W Yellow
        bsf     EWRED   ;Turn on E/W Red
        movlw   .2      ;Load value for 2 second delay
        call    dlyn
        bcf     PORTB,0 ;Turn off N/S Red
        goto    loop    ;Do it again

        end
```

The program opens with the typical configuration parameters, followed by the output pin assignments; for instance, the North/South red light is assigned to PortB, pin 0 (physically pin 6 on the 16F628).

which is usually 1 to 3 seconds long, gives time for cars in the intersection to clear out before the cross traffic is given the green light. Makes sense.

Most traffic light models, particularly those made using logic chips, don't have a simultaneous red light condition. It's blink red, blink green. I not only found that annoying, but a challenge. It didn't take me long to figure out that this was a job for a PIC.

First, I made a chart showing the sequence of events and the timing values (Table 1). Notice that the timing for the two sides is asymmetrical. That is, the East/West traffic has a 20-second green light and the North/South flow has only a 15-second green light. This pattern assumes that there are more cars going sideways (east to west), than there are going up and down. The yellow and red overlap times are similarly adjusted.

On The Road To Code

Now that I had a game plan, the next step was translating concept to code. I had two choices: a serial program or a look-up table. Here are the trade-offs. Serial code typically requires more memory space, but is easy to follow and easier to modify. A look-up table can deal with more values in a smaller memory size, but is rigidly fixed in its operation. It doesn't take a rocket scientist to figure out which method is best for this project: serial code.

I program in assembly language for a couple of reasons. First and foremost, it results in a smaller code (some call it a tighter code) compared to a compiled program like BASIC. I know it takes more strokes to do the same thing, but routines that you do often, like displaying data on an LCD, can be placed in a "module"—a packet that has all the code you need for that routine so that you don't have to reinvent the wheel. Simply plug it in where needed. As we go along, I will build up a library of commonly-used modules.

Second, assembly language has a touch on the pulse of the PIC family. It gives you insight into the inner workings that are invisible to you at higher-level languages. Wait before you jump up and say, "I don't wanna know how the dumb thing works! I just want it to work, and I know PICBasic." My retort is: The more you know about the capabilities of the PIC, the more it can do for you. Furthermore, the PIC instruction set is just 35 commands. My kids have memo-

www.americanradiohistory.com

TABLE 1

Sequence	North/South	Signal	East/West	Signal	Comment
#1 -- 15 sec					
Red	OFF	○	ON	●	
Yellow	OFF	○	OFF	○	North/South flow
Green	ON	◉	OFF	○	
#2 -- 2 sec					
Red	OFF	○	ON	●	
Yellow	ON	○	OFF	○	North/South caution
Green	OFF	○	OFF	○	
#3 -- 1 sec					
Red	ON	●	ON	●	
Yellow	OFF	○	OFF	○	Clear intersection
Green	OFF	○	OFF	○	
#4 -- 20 sec					
Red	ON	●	OFF	○	
Yellow	OFF	○	OFF	○	East/West flow
Green	OFF	○	ON	◉	
#5 -- 3 sec					
Red	ON	●	OFF	○	
Yellow	OFF	○	ON	○	East/West caution
Green	OFF	○	OFF	○	
#6 -- 2 sec					
Red	ON	●	ON	●	
Yellow	OFF	○	OFF	○	Clear intersection
Green	OFF	○	OFF	○	

The East/West traffic has a 20-second green light and the North/South flow has only a 15-second green light. This pattern assumes that there are more cars going sideways (east to west), than there are going up and down.

rized more TV show time slots than that.

Finally, don't panic. All my programs are well annotated so that you are never at a loss as to what's happening when. You'll be able to download a copy of the program from *www.gernsback.com* or buy a programmed PIC from the source listed in the Parts List. So for those of you who want only to build an LED traffic light and could care less about the software details, skip to "Let There Be Light."

PARTS LIST FOR THE BASIC TRAFFIC LIGHT (FIG. 1)

1—16F628 PIC
6—330-ohm resistors
2—Red LEDs
2—Yellow LEDs
2—Green LEDs

The PIC Program

Ready? (Drum roll, please.) Here's what I came up with—Listing 1. The program opens with the typical configuration parameters, followed by the output pin assignments; for instance, the North/South red light is assigned to PortB, pin 0 (physically pin 6 on the 16F628). Next, a 1-second delay timer is established using a series of looping routines.

The rest of the program is self-explanatory and is a mirror image of Table 1; follow the bouncing annotation. Notice how easy it is to change the on and off times for any sequence of green/yellow/red. Simply enter the number of seconds you wish into the "Load value..." line using a text editor like WordPad.

I know some of you have programmed in PIC assembly language before and may question why there's a period before the Load value (e.g., movlw .2 ;Load value for 2 second delay) number. Without the period, the PIC assumes you are speaking in hex (16) numbers. Adding the period tells the program you mean decimal seconds.

All the above was done using just a few lines of assembly language. Simple, huh? If you insist on using PICBasic, you have all the information you need in Table 1.

'Nuf textbook stuff for this month. Ready to get your hands dirty?

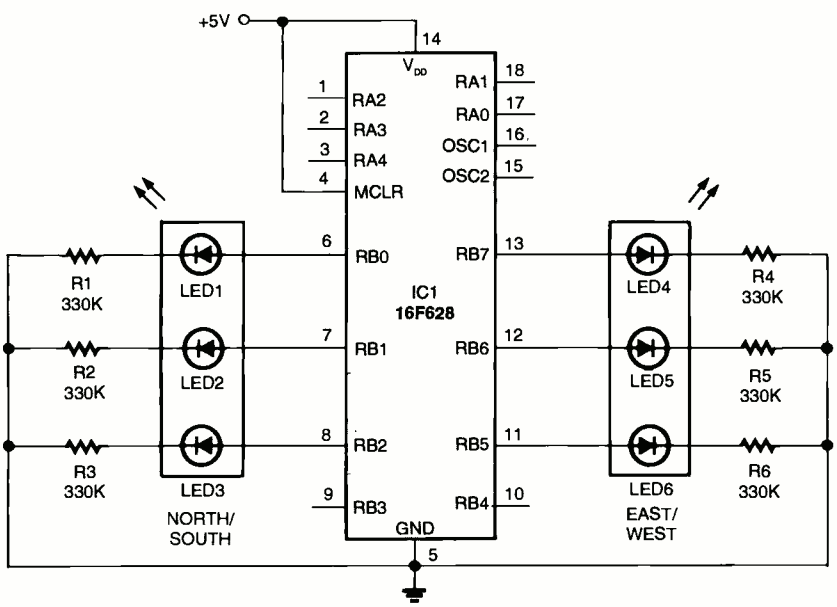

Fig. 1. A simple traffic light for experimenting can be made using nothing more than a 16F628 PIC, six LEDs, and six resistors.

www.americanradiohistory.com

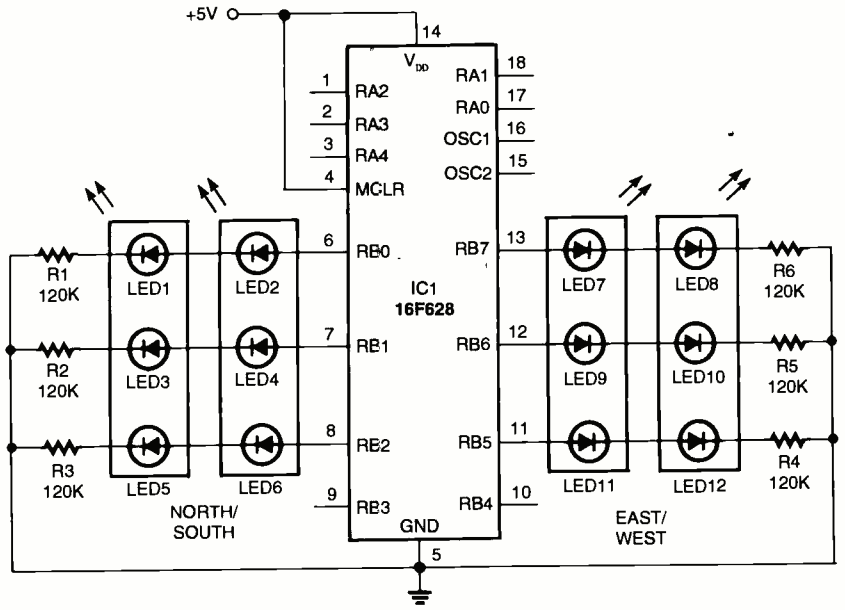

Fig. 2. A more realistic effect is created by placing the North/South and East/West LEDs in series to generate a four-sided sign.

PARTS LIST FOR THE FOUR-SIDED LIGHT (FIG. 2)

1—16F628 PIC
6—120-ohm resistors
4—Red LEDs
4—Yellow LEDs
4—Green LEDs

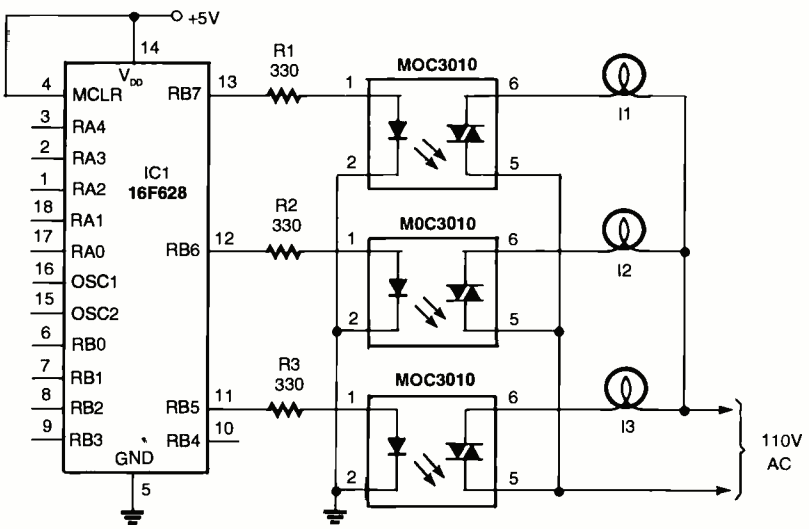

Fig. 3. This circuit lets you increase the light output using incandescent lamps. For a two- or four-sided signal, you need to add three more MOC3010 optoisolators to the RB0, RB1, and RB2 outputs. Use Fig. 1 as a guide.

PARTS LIST FOR THE 110-VOLT LIGHT (FIG. 3)

1—16F628 PIC
3—330-ohm resistors
3—MOV3010 optoisolators
3—110V lamps (see text)

Let There Be Light

Before I begin a discussion on the project's hardware construction, let me warn you that I'm forever a dreamer and a tinkerer. Some of my ideas turn out to be a "marketable item" (right, sure) and actually make it to the printed circuit board (PCB) stage, which I'm more than willing to share here. Other projects, though, never leave the breadboard and

TIPS FOR MAIL ORDER PURCHASE

It is impossible for us to verify the claims of advertisers, including but not limited to product availability, credibility, reliability and existence of warranties. The following information is provided as a service for your protection. It is not intended to constitute legal advice and readers are advised to obtain independent advice on how to best protect their own interests based upon their individual circumstances and jurisdictions.

1. **Confirm price and merchandise information** with the seller, including brand, model, color or finish, accessories and rebates included in the price.

2. **Understand the seller's return and/or refund policy**, including the allowable return period, who pays the postage for returned merchandise and whether there is any "restocking" or "return" charge.

3. **Understand the product's warranty**. Is there a manufacturer's warranty, and if so, is it for a U.S. or foreign manufacturer? Note that many manufacturers assert that, even if the product comes with a U.S. manufacturer's warranty, if you purchase from an unauthorized dealer, you are not covered by the manufacturer's warranty. If in doubt, contact the manufacturer directly. In addition to, or instead of the manufacturer's warranty, the seller may offer its own warranty. In either case, what is covered by warranty, how long is the warranty period, where will the product be serviced, is there a charge for service, what do you have to do to obtain service and will the product be repaired or replaced? You may want to receive a copy of the written warranty before placing your order.

4. **Keep a copy of all transactions**, including but not limited to cancelled check, receipt and correspondence. For phone orders, make a note of the order including merchandise ordered, price, order date, expected delivery date and salesperson's name.

5. **If the merchandise is not shipped within the promised time,** or if no time was promised, within 30 days of receipt of the order, you generally have the right to cancel the order and get a refund.

6. **Merchandise substitution** without your express prior consent is generally not allowed.

7. **If you have a problem with your order or the merchandise**, write a letter to the seller with all the pertinent information and keep a copy.

8. **If you are unable to obtain satisfaction from the seller**, contact the consumer protection agency in the seller's state and your local Post Office.

If, after following the guidelines, you experience a problem with a mail order advertiser that you are unable to resolve, please let us know. Write to Advertising Department, Gernsback Publications Inc., 275 G Marcus Blvd. Hauppauge, NY 11788

Be sure to include copies of all correspondence.

www.americanradiohistory.com

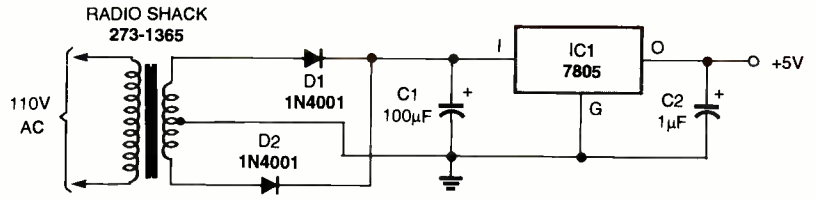

Fig. 4. The traffic signal will operate from any 5.5-volt source, including batteries. Here's a simple power supply for those who believe in DIY.

PARTS LIST FOR THE POWER SUPPLY (FIG. 4)

1—7805 IC
2—1N4001 diode
1—100µF, 16V capacitor
1—1µF, 16V tantalum capacitor
1—12.6VCT transformer (RadioShack 273-1365)
1—Heat sink (RadioShack 276-1363)

A programmed 16F628 traffic light PIC is available from Tim Hamel, 1283 Fir Acres Dr., Eugene, OR 97401-1811 (tekphobia@attbi.com). The price is $12, including shipping and handling.

are done just to satisfy my curiosity.

That said, this project falls into the "breadboard only" category, which leaves the fabrication details up to you and your imagination. However, I can visualize it as a realistic addition to any serious model railroad layout, a unique hanging party decoration, or as a fascinating light show for a den.

Let's begin with the schematic, or more properly the schematics. Figure 1 shows the basic traffic light design with only two sides; a four-sided model is shown in Fig. 2. This view shows the 16F628 PIC from the top, with a slight relocation of pins 5 (GND) and 14 (V_{cc}) to make the drawing easier to understand.

The series resistors limit the LED current to just under 10 mA per output pin, and I purposely didn't place the LEDs in parallel in Fig. 2 simply because that would put more strain on the PIC than I prefer—and it saves six resistors. I've built both circuits using a wide variety of LEDs and found that each had its place. The smaller 3-mm LEDs are a perfect choice for a model railroad layout, and the larger 5mm work well for a desktop display.

I've also included a 110-volt version that can control incandescent lamps up to 100 watts (Fig. 3), but it only shows one side of the traffic light. I first saw this version of a traffic signal in a friend's den, using 7-watt Christmas bulbs. I realized that one side was just right for his small bar. For outdoor scenes you will want a two-sided display with 60- or 100-watt bulbs.

And The Rest

You may notice that the clock crystal is glaringly absent. No, I didn't forget it. Unlike the 16F84, the 16F628 has a built-in, software programmable oscillator (the INTRC command) that runs at 4 MHz. Of course, you can use an external clock or crystal, but let's save that for another month.

Finally, you'll need a 5-volt power supply. Fortunately, the 16F628 is very forgiving and will operate from 3.0 to 5.5 volts, so a good 5-volt, DC wall-wart rated at 200 mA will work just fine. In case you want to roll your own, check out Fig. 4. While it's very straightforward, make sure you place the capacitors as close to the 7805 as possible.

That's all the space I have room for this month. Next month I'll show you how to interface an external ADC (*a*nalog-to-*d*igital *c*onverter) to monitor temperature. 'Til then P

Q & A

(continued from page 45)

calling it this year) to look at the mobile installation section should point you to a serious noise filter you can build. You should only have to worry about the 12-volt line feeding your system. Avoid messing with some of the techniques described in the Handbook that are needed to keep noise out of sensitive short-wave receivers such as grounded cans over the distributor and shielded ignition wires. A low-pass power filter on the 12-volt line should do the trick without having to invest in some kind of amplifier/filter system. You may need a filter at the output of the inverter as well, but more than likely the LCD power is the culprit.

Writing to Q&A

As always, we welcome your questions. Please be sure to include:

(1) plenty of background material,

(2) your full name and address on the letter (not just the envelope),

(3) and a complete diagram, if asking about a circuit; and

(4) type your letter or write neatly.

Send questions to Q&A, **Poptronics**, 275-G Marcus Blvd., Hauppauge, NY 11788 or to *q&a@gernsback.com*, but do not expect an immediate reply in these pages (because of our backlog). We regret that we cannot give personal replies. Please no graphics files larger than 100K. P

While speeding treatments and cures for neuromuscular disorders, advances made by MDA researchers also have enhanced therapy prospects for heart disease, cancer, arthritis, Alzheimer's and AIDS.

Giving to MDA makes a world of difference.

MDA®
MUSCULAR DYSTROPHY ASSOCIATION
(800) 572-1717

www.americanradiohistory.com

SERVICE CLINIC

mailto: serviceclinic@gernsback.com

SAM GOLDWASSER

AC ADAPTERS

It seems that the world now revolves around AC Adapters or 'Wall Warts' as they tend to be called. While AC adapters aren't usually highly sophisticated devices, they are essential to the functioning of much modern electronic equipment. Countless millions of perfectly good products are discarded due to the failure of the AC adapter cord or just the loss of the AC adapter to that bottomless utility drawer. Thus, being able to match up an AC adapter with its associated equipment or safely substituting another one can come in very handy. Despite the fact that the plugs to the equipment may be identical THESE CAN GENERALLY NOT BE INTERCHANGED. The type (AC or DC), voltage, current capacity, and polarity are all critical to proper operation of the equipment. Use of an improper adapter or even just reverse polarity can permanently damage or destroy the device. Most equipment is protected against stupidity to a greater or lesser degree—but don't count on it.

There are several types:

AC Transformer—All wall warts are often called transformers. However, only if the output is stated to be 'AC' does the device simply contain a (step-down) transformer. These typically put out anywhere from 3 to 20 V_{AC} or more at 50 mA to 3 A or more. The most common units range from 6 to 15 V_{AC} at less than 1 A. Typically, the regulation is very poor so that an adapter rated at 12 V_{AC} will typically put out 14 V_{AC} with no load and drop to less than 12 V_{AC} at a rated load. However, some may output 2X or more of the rated voltage with no load! To gain agency approval, these adapters need to be protected internally so that there is no fire hazard even if the output is shorted. There may be a fuse or thermal fuse internally located (and inaccessible without partially destructive disassembly).

DC Power Pack—In addition to a step-down transformer, these include at the very least a rectifier and filter capacitor. There may be additional regulation, but most often there is none. Thus, while the output is DC, the powered equipment will almost always include an electronic regulation. As above, you may find bad connections or a blown fuse or thermal fuse inside the adapter, but the most common problems are with the cable.

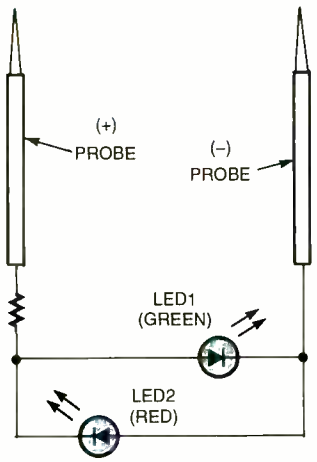

Fig. 1. A handy low-cost device can be built into an old ballpoint pen case or something similar to provide a convenient indication of wall adapter type, operation, and polarity.

Switching Power Supply—These are complete low-power AC-DC converters using a high-frequency inverter. Most common applications are laptop computers and camcorders. The output(s) will be fairly well regulated, and these will often accept universal power—90–250 V_{AC} or V_{DC}. The remainder of this article deals primarily with the simple AC and DC transformer-based wall adapters. For in-depth treatment of the switchmode variety, see the "Service Clinics" on this topic or the information at my Web site, *www.repairfaq.org*.

Safety

For the common transformer-based AC adapter, there is no danger anywhere inside the device once unplugged. For the switchmode variety, there can be lethal voltages stored on capacitors even after being unplugged, especially where the unit is defective (since there may be no load to discharge the cap). Any internal over-current fuses or thermal fuses represent essential safety features of an AC adapter. These must NOT be removed except during testing. Where a fuse is found to be blown, use only an exact replacement. I really don't recommend running a repaired cobbled-together AC adapter unattended in any case, since even the sealed case provides some additional amount of fire protection.

About AC Adapter Ratings

The following mainly applies to AC adapters using transformers. Those based on switchmode power supplies adapters have tended to be well designed with decent regulation and realistic ratings. Of course, they are generally also much more expensive!

There is no standard for rating AC adapters. When a particular adapter is listed as, say, 12 V, 1 A max, there's a good chance the output will average 12 V when outputting 1 A; but what it does at lower currents is not known. In fact, lightly loaded, the output voltage may be more than double its nameplate rating! This could be disastrous where a piece of equipment is plugged into it that doesn't expect such a high voltage. The rating also doesn't say anything about the ripple (for DC models)—it could be almost anything. The lifetime of an AC adapter (particularly those outputting DC) when run at or near its nameplate rating may be very short. Why? Because they often use low temperature (cheap!) components that can't take the heat.

For AC output models, the transformer itself may fail (or at least the thermal fuse). For DC models, the electrolytic capacitor(s) may go bad very quickly. The likely result will be that the output voltage will disappear entirely

www.americanradiohistory.com

(AC models) or drop in value with greatly increased ripple (DC models). Where the adapter is used with its intended equipment, one can presume the manufacturer did the proper testing to assure compatibility and adequate life (though this isn't always the case!). However, where it is used in some other application, the life of the adapter and the equipment may be much shorter than expected, possibly failing almost immediately.

Protect Yourself From "Unknown AC Adapter Syndrome"

Apparently, manufacturers of equipment powered by AC adapters have discovered that they can improve their bottom line by NOT printing the AC adapter ratings on the device itself, and possibly not even in the user manual. I don't know whether this is actually done for liability reasons (so you aren't tempted to actually use an AC adapter other than their own exorbitantly priced replacement) or just to save 3 microcents on printing ink, but the net result is that the owner has no idea what adapter in that drawer that collects adapters is the correct one. They could at least specify a particular model adapter if they don't think the average consumer has an intelligence greater than a carrot.

For example, I own 2 U.S. Robotics modems. One uses a 9 V_{AC} adapter; the other uses a 20 V_{AC} adapter. The power jacks are identical and totally unmarked. Guess what happens if I guess wrong? With too little voltage, the modem may appear to work but be unreliable. With too much voltage, the smoke will very likely be released instantly.

To save yourself a lot of hassle and possible damaged equipment, put a label on each AC-adapter powered device you own with the voltage, current, AC or DC (with polarity), and model number of the adapter (make one up if nothing is obvious and put it on the device and adapter). Then, if you misplace the adapter, you'll know what to look for and if it is nowhere to be found, will have enough information to purchase a replacement.

Why Do AC Adapters Usually Use Heavy Transformers?

The main reasons are safety and cost. Line isolation is essential for safety with respect to electrical shock—no part accessible to the user must be connected to either side of the power line. A regular transformer provides this automatically. While combinations of passive components can reduce the risk of shock, nothing quite matches the virtually fail-safe nature of a simple transformer between the power line and the low-voltage circuitry. To achieve similar isolation without a line transformer generally requires a switchmode power supply that actually contains a small high-frequency transformer to provide the isolation. Until recently, such systems were much more expensive than a simple iron transformer, but that is changing and many modern devices now use a wall adapter based on this approach. These can be recognized by their lightweight, DC (probably regulated) output, and the required warnings NOT to cut them off and replace them with an ordinary plug! I wonder how many people have ignored the warnings when their equipment stopped working and replaced that fat "plug"? What a scenario for disaster!

AC Adapter Testing

AC adapters that are not the switching type can easily be tested with a VOM or DMM. The voltage you measure (AC or DC) will probably be 10–25% higher than the label specification. If you get no reading, wiggle, squeeze, squish, and otherwise abuse the cord both at the wall wart end and at the device end. You may be able to get it to make momentary contact and confirm that the adapter itself is functioning. The most common problem is one or both conductors breaking internally at one of the ends due to continuous bending and stretching. Make sure the outlet is live—check with a lamp.

Make sure any voltage selector switch is set to the correct position. Move it back and forth a couple of times to make sure the contacts are clean. If the voltage readings check out for now, then wiggle the cord as above in any case to make sure the internal wiring is intact—it may be intermittent. Although it is possible for the adapter to fail in peculiar ways, a satisfactory voltage test should indicate that the adapter is functioning correctly.

Pocket Wall Adapter Tester/Polarity Checker

A handy low-cost device can be built into an old ball point pen case or something similar to provide a convenient indication of wall adapter type, operation, and polarity:

- The green LED will light up if the polarity of an adapter with a DC output agrees with the probe markings.
- The red LED will light up if the polarity of an adapter with a DC output is the opposite of the probe markings.
- Both LEDs will light up if your adapter puts out AC rather than DC.
- The LED brightness can provide a rough indication of the output voltage.

Getting Inside an AC Adapter

Manufacturers come up with all sorts of creative ways of making access a challenge:

- Some adapters are secured with screws—possibly with strange heads. If this is the case, disassembly is possible without damage, at least in principle. However, you may need to find or improvise for the special tool.
- Some of them are fully potted and impossible to open without dynamite. Forget it—move on with your life. These will feel solid and there will be no "give" when pressing the sides.

For those that are glued:

- A hacksaw or thin file can be used to carefully cut along the glue line just deep enough so that the two halves can be popped apart. Make sure you don't rip into internal components! Gently whacking a large knife with a soft mallet may be a bit more persuasive. :)
- A vise can be used to squeeze on diagonally opposing corners, which will hopefully pop the case open along the glue line (or somewhere!). After the repair, the two halves (or pieces!) can be glued back together.

AC Adapter Repair

Although the cost of a new adapter is usually modest, repair is often so easy that it makes sense in any case. The most common problem (and the only one we will deal with here) is the case of a broken wire internal to the cable at either the wall wart or device end due to excessive flexing of the cable. Usually, the point of the break is just at the end of the rubber cable guard. If you flex the cable,

www.americanradiohistory.com

you will probably see that it bends more easily here than elsewhere due to the broken inner conductor. If you are reasonably dexterous, you can cut the cable at this point, strip the wires back far enough to get to the good copper, and solder the ends together. Insulate completely with several layers of electrical tape. Make sure you do not interchange the two wires for DC output adapters! (They are usually marked somehow either with a stripe on the insulator, a thread inside with one of the conductors, or copper and silver colored conductors). Before you cut, make a note of the proper hookup just to be sure. Verify polarity after the repair with a voltmeter.

The same procedure can be followed if the break is at the device plug end, but you may be able to buy a replacement plug that has solder or screw terminals rather than attempting to salvage the old one. Once the repair is complete, test for correct voltage and polarity before connecting the powered equipment. This repair may not be pretty, but it will work fine, is safe, and will last a long time if done carefully. If the adapter can be opened—it is assembled with screws rather than being glued together—then you can run the good part of the cable inside and solder directly to the internal terminals. Again, verify the polarity before you plug in your expensive equipment.

WARNING: If this is a switching power supply type of adapter, there are dangerous voltages present inside in addition to the actual line connections. Do not touch any parts of the internal circuitry when plugged in and make sure the large filter capacitor is discharged (test with a voltmeter) before touching or doing any work on the circuit board.

If it is a normal adapter, then the only danger when it's open is direct connections to the AC plug. Stay clear when it is plugged in.

AC Adapter Substitution and Equipment Damage

Those voltage and current ratings are there for a reason. You may get away with a lower voltage or current adapter without permanent damage but using a higher voltage adapter is playing Russian Roulette. Even using an adapter from a different device—even with similar ratings, may be risky because there is no real standard. A 12-volt adapter from one manufacturer may put out 12 V at all times, whereas one from another manufacturer may put out 20 V or more when unloaded.

A variety of types of protection are often incorporated into adapter-powered equipment. Sometimes these actually will save the day. Unfortunately, designers cannot anticipate all the creative techniques people use to prove they really do not have a clue of what they are doing. The worst seems to be where an attempt is made to operate portable devices off of an automotive electrical system. Fireworks are often the result.

If you tried an incorrect adapter and the device now does not work, there are several possibilities (assuming the adapter survived and this is not the problem):

- An internal fuse or IC protector blew. This would be the easiest to repair.
- A protection diode sacrificed itself. This is usually reverse biased across the input and is supposed to short out the adapter if the polarity is reversed. However, it may have failed shorted, particularly if you used a high current adapter (or automotive power).
- Some really expensive hard-to-obtain parts blew up. Unfortunately, this outcome is all too common.

Some devices are designed in such a way that they will survive almost anything. A series diode would protect against reverse polarity. Alternatively, a large parallel diode with upstream current limiting resistor or PTC thermistor, and fuses, fusable resistors, or IC protectors would cut off current before the parallel diode or circuit board traces have time to vaporize. A crowbar circuit (zener to trigger an SCR) could be used to protect against reasonable overvoltage.

Voltage and Polarity of AC Adapter-Powered Devices

Knowing the voltage and polarity is often required when the original adapter is lost or misplaced or isn't labeled so you are not sure if it is the correct one for your device. Or, to be able to set the voltage and polarity on a universal adapter. It's amazing how many things like modems and answering machines don't list the voltage and polarity on the case—it's not like the extra printing would cost anything! If you are simply replacing a broken adapter with a universal type, check the label on the old one—they almost always provide this information. There are three issues: AC versus DC, the voltage, and polarity. Unfortunately, fully determining these requirements experimentally can be non-trivial. While many devices have built-in protection for reverse polarity (which would probably also include putting AC into a device requiring DC), others do not and may be damaged or may at least blow an internal fuse. Few devices protect against extreme overvoltage. If you have a multimeter, there are also some tests you can perform without opening the device, but they are not foolproof. Here are some general guidelines. The more of these you can confirm, the greater the confidence of avoiding disaster.

The best way would be to find the information without serious testing. It may be readily available:

- Examine the device for labels, either embossed near the power jack or on the rear or underneath such as DC 5V ⎓ AC 12 V ~.
- If there is a voltage listed, but no indication of AC/DC, 6 V or less is likely to be DC (and may require decent regulation); higher voltages could be either AC or DC (probably filtered but unregulated though not always).
- A symmetric (non-polarized) jack means it is supposed to operate on AC.
- If the device has a metal case or you can get to the metal shields on connectors, check for continuity to the power jack. This probably is the negative input (though no guarantee—some manufacturers do really strange things!).
- Check your user manual!
- Contact the manufacturer or their Web site.

The next best way would be to open it up and trace enough of the power circuitry to identify components that have obvious voltage ratings and polarities like electrolytic capacitors. There may even be labeling on the circuit board.

- There will almost always be at least one electrolytic cap very near the power input.

(Continued on page 58)

www.americanradiohistory.com

ELECTRONIC TECHNOLOGY TODAY INC.

P.O. Box 240 • Massapequa Park, NY 11762

INVENTORY BLOWOUT SALE

30% OFF

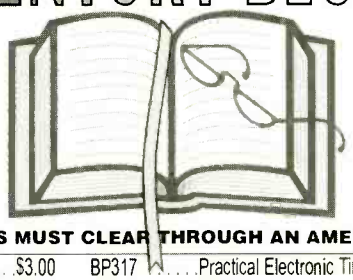

*** ALL CANADIAN CHECKS MUST CLEAR THROUGH AN AMERICAN BANK**

BP07	100 Radio Hookups	$3.00	BP317	Practical Electronic Timing	$6.99
BP36	50 Circuits Using Germanium, Silicon & Zender Diodes	$2.99	BP320	Electronic Projects for Your PC	$5.99
BP44	IC 555 Projects	$5.99	BP322	Circuit Source Book 2	$6.99
BP56	Electronic Security Devices	$3.99	BP329	Electronic Music Learning Projects	$6.99
BP64	Semiconductor Technology Elements of Elect Book 3	$5.99	BP332	A Beginners Guide to TTL Digital ICS	$6.99
BP74	Electronic Music Projects	$3.99	BP333	A Beginners Guide to CMOS Digital ICS	$6.99
BP76	Power Supply Projects	$3.99	BP334	Magic Electronic Projects	$6.99
BP78	Practical Computer Experiments	$2.99	BP355	A Guide to the World's Radio Stations	$7.99
BP80	Popular Electronic Circuits	$3.99	BP359	An Introduction to Light in Electronics	$6.99
BP103	Multi-Circuit Board Projects	$2.99	BP367	Electronic Projects for the Garden	$6.99
BP109	The Art of Programming the IK ZX81	$3.99	BP370	The Superhet Radio Handbook	$6.99
BP112	A Z-80 Workshop Manual	$5.99	BP371	Electronic Projects for Experimenters	$6.99
BP114	The Art of Programming the 16K ZX81	$3.99	BP374	Practical Fibre-Optic Projects	$6.99
BP115	The Pre-Computer Book	$2.99	BP378	45 Simple Electronic Terminal Block Projects	$6.99
BP124	Easy Add-On Projects for the Spectrum, ZX81 & ACE	$3.99	BP379	30 Simple IC Terminal Block Projects	$6.99
BP143	An Intro to Programming the Atari 600/800 XL	$2.99	BP384	Practical Electronic Model Railways Projects	$6.99
BP148	Computer Terminology Explained	$2.99	BP385	Easy PC Interfacing	$6.99
BP154	An Introduction to MSX Basic	$3.99	BP391	Fault-Finding Electronic Projects	$6.99
BP156	An Introduction to QL Machine Code	$3.99	BP392	Electronic Project Building for Beginners	$6.99
BP187	A Prac Ref Guide to Word Pro Amstrad PCW8256/PCW8512	$7.99	BP393	Practical Oscillator	$6.99
BP190	More Advanced Electronic Security Projects	$3.99	BP396	Electronic Hobbyists Data Book	$7.99
BP194	Modern OPTO Device Projects	$3.99	BP401	Transistor Data Tables	$7.99
BP232	A Concise Introduction to MS-DOS	$3.99	BP411	A Practical Intro to Surface Mount Devices	$6.99
BP256	An Intro to Loudspeakers and Enclosure Design	$3.99	BP413	Practical Remote Control Projects	$7.99
BP264	A Concise Advanced User's Guide to MS-DOS	$3.99	BP416	Practical Alarm Projects	$6.99
BP272	Interfacing PCS and Compatibles	$5.99	BP439	Troubleshooting Your PC	$8.99
BP290	An Intro to Amateur Communications Satellites	$5.99	PCP107	Digital Logic Gates and Flip-Flops	$10.99
BP297	Loudspeakers for Musicians	$6.99	PCP112	Digital Electronics Projects for Beginners	$10.99
BP299	Practical Electronic Filters	$6.99	PCP114	Advanced MIDI Users Guide	$10.99
BP302	A Concise User's Guide to Lotus 1-2-3 Release 3.1	$5.99	ETT1	Wireless & Electrical Cyclopedia	$4.99
BP304	Projects for Radio Amateurs and S.W.L.S	$5.99			

PRICES DO NOT INCLUDE SHIPPING & HANDLING. ALL SALES ARE FINAL, NO RETURNS

ORDER FORM

Book No.	Title	Price	No. of Copies	Cost

SHIPPING COSTS				
$0.01 to $5.00	$2.00	$20.01 to $30.00	$5.00	
$5.01 to $10.00	$3.00	$30.01 to $40.00	$6.00	
$10.01 to $20.00	$4.00	$40.01 to $50.00	$7.00	
$50.01 and above.....	$8.50			

Total Amount $
- 30% off
Subtotal
Local NY State Sales Tax
Add shipping cost (see table)
TOTAL COST $

Name _____

Address _____

City _____ State _____ Zip _____

If you wish to use a Credit Card:

☐ MasterCard ☐ Visa Expire Date /

Card No. _____

Signature _____

Allow 6-8 weeks for order to be fulfilled.

Please return this order form to:
ELECTRONIC TECHNOLOGY TODAY, INC.
P.O. Box 240
Massapequa Park, NY 11762-0240

Telephone Orders: If you wish to place your credit-card order by phone, call 631/592-6720. Have your credit-card ready. Sorry, no orders accepted outside of U.S.A. and Canada. New York State Residents must add applicable sales tax. Offer expires 9/30/02

ET11

www.americanradiohistory.com

BASIC CIRCUITRY

mailto: basiccircuitry@gernsback.com

CHARLES D. RAKES

Download These Circuits From www.electronicswork bench.com/poptronics

More On Timer Circuits

Last month we were into a number of timer circuits; and as I remember, we ran out of time before we ran out of timer circuits. Also, this visit we're going to look at some fun electronic sound-generator circuits, which to some might be a source of irritation, frustration, and real aggravation. One of the circuits will include a timer circuit and an irritating sound-generator circuit. So get ready for some electronic circuitry fun.

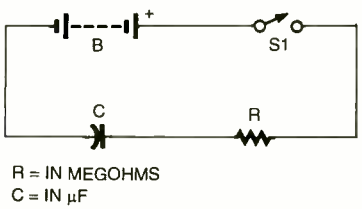

Fig. 1. The schematic above is a basic RC timing circuit. With the component values as follows: B1=10-volts, C=10-µF, and R=1-megohm, and with S1 closed, the voltage across the capacitor after one time constant will reach 6.32 volts.

Big Time RC Timer

Before hopping into the tar pit, here's a brief look at the basic RC timing configuration and how the R works with the C in determining a timer's time period. The time required in seconds to charge a capacitor to 63.2% of the applied voltage is one time constant. The timing formula is Time= Resistance in ohms × Capacitance in farads. Locating resistors in ohms is no problem, but capacitors in farads are not nearly as easy. Not to worry, because we can shift a few decimals around and end up with a more friendly timing formula.

Time in seconds = Resistance in megohms × capacitors in microfarads. Both of these components are off-the-shelf and out-of-the-junk-box items.

The combination of a 1-megohm resistor and a 1-µF capacitor is 1 × 1= 1 second in charge time for one time constant. A 1-meg resistor and a 10-µF capacitor combination produce a 10-second time constant. A basic RC timing circuit is shown in Fig. 1. With the component values as follows: B1=10-volts, C=10-µF, and R=1-megohm, and with S1 closed, the voltage across the capacitor after one time constant will reach 6.32 volts.

Several years ago someone discovered a way to stuff behemoth amounts of microfarads in a tiny package no bigger than a robust blueberry. If you can imagine a ONE-FARAD capacitor of this size, you're ready for our basic timer circuit shown in Fig. 2. Now we can go back to the original formula of Time = R × C in farads for our next timer circuits.

This is a delay-on type timer that remains off until the capacitor charges up to a predetermined voltage. In this circuit a single gate of a 4093 CMOS quad 2-input NAND Schmitt trigger IC is the voltage-sensing device. When the charging voltage reaches about 3 volts, the gate changes state lighting LED1, which will remain on as long as power is applied. To reset the timer the capacitor must be discharged, and the modified circuit in Fig. 3 does just that.

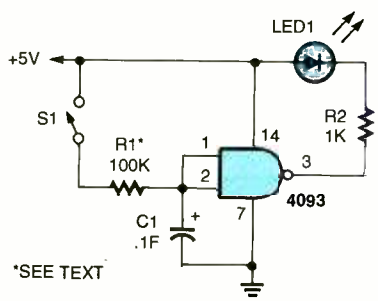

Fig. 2. This is a delay-on type timer that remains off until the capacitor charges up to a predetermined voltage. In this circuit a single gate of a 4093 CMOS quad 2-input NAND Schmitt trigger IC is the voltage-sensing device.

PARTS LIST FOR THE BASIC TIMER (FIG. 2)

LED1—Light-emitting diode, any color
IC—4093 CMOS Quad 2-input Schmitt trigger NAND gate
C1—.1-Farad/5.5-V_{DC} capacitor, RadioShack #900-5220
R1—10,000- to 100,000- ohm, ¼-watt, 5% resistor (see text)
R2—1000-ohm, ¼-watt, 5% resistor (see text)

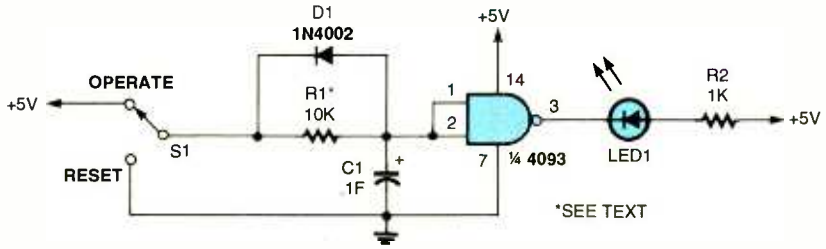

Fig. 3. S1 can be used to reset the circuit by discharging the capacitor through D1 to ground. The voltage remaining across the capacitor will be about .6 volts, and that will be the starting voltage for the next delay-on time period, which will be shorter than starting with a completely discharged capacitor.

PARTS FOR THE MODIFIED TIMER CIRCUIT (FIG. 3)

LED1—Light-emitting diode, any color
D1—1N4002 silicon diode
IC1—4093 CMOS quad 2-input Schmitt trigger NAND gate
C1—.1-Farad/5.5-V_{DC} capacitor
R1—10,000- to 100,000- ohm, ¼-watt, 5% resistor (see text)
R2—1000-ohm, ¼-watt, 5% resistor (see text)
S1—Single-pole two-position switch

www.americanradiohistory.com

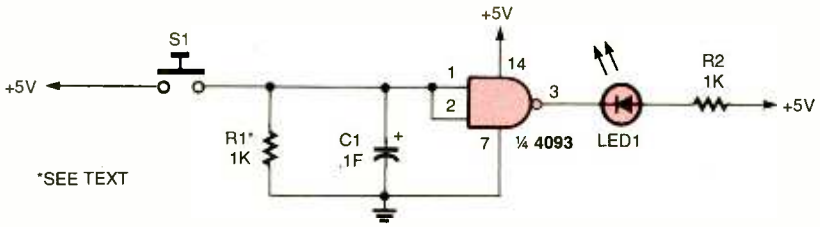

Fig. 4. A delay-off timer circuit is shown above, which is very similar to our delay-on circuit. Closing S1 for a few seconds to charge the .1-Farad capacitor activates the timer.

PARTS LIST FOR DELAY-OFF TIMER (FIG. 4)

LED1—Light-emitting diode, any color
IC1—4093 CMOS quad 2-input Schmitt trigger NAND gate
C1—.1-Farad/5.5-V_{DC} capacitor
R1, R2—1000-ohm, ¼-watt, 5% resistor
S1—Normally open, pushbutton switch

After the timer has timed out, S1 can be used to reset the circuit by discharging the capacitor through D1 to ground. The voltage remaining across the capacitor will be about .6 volts, and that will be the starting voltage for the next delay-on time period, which will be shorter than starting with a completely discharged capacitor. Using the .1-F capacitor I had on hand and with a timing resistor (R1) of 1k, the on-delay time was about 40 seconds, and with a 10-k resistor the delay lengthened to over 7 minutes. Resistor values up to 100K will give much longer on-delay times. It just takes a lot of time to select the value of R1 for a desired long turn-on delay time period.

Even though using the time formula with the RC values used, the time should figure out to about 100 seconds. However, there are several factors that come into play that reduces the formula's time figure. Starting at a voltage of .6 and with the capacitors with a tolerance of =80/-20%, the 40-second delay is a realistic value. Some experimenting in selecting the desired timing resistor will be necessary to obtain just the right delay.

A delay-off timer circuit is shown in Fig. 4, which is very similar to our delay-on circuit. Closing S1 for a few seconds to charge the .1-Farad capacitor activates the timer. The input voltage to the 4093's gate goes high pulling the output low, lighting the LED which remains on until the timing capacitor discharges to about 2.2 volts. The delay-off time with a 1-k resistor is about 50 seconds, and about 8 minutes with a 10-k discharge resistor.

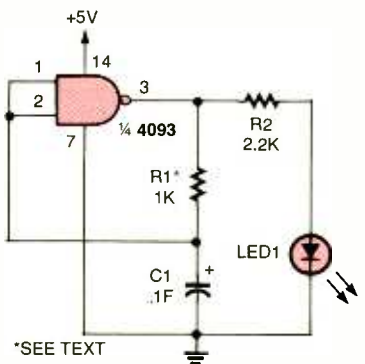

Fig. 5. When the power is first applied to this circuit, the voltage across the capacitor is zero and so is the 4093's input gate. The gate's output is high supplying a positive charging current to the timing capacitor.

PARTS LIST FOR "AT A SNAIL'S PACE" (FIG. 5)

LED1— Light-emitting diode, any color
IC1—4093 CMOS quad 2-input Schmitt trigger gate
C1—.1-Farad/5.5-V_{DC} capacitor
R1—1000-ohm, ¼-watt, 5% resistor (see text)
R2—2200-ohm, ¼-watt, 5% resistor (see text)

At A Snail's Pace

The 4093 is a versatile gate, indeed. The gate's Schmitt-trigger input allows it to be connected in the simplest of astable oscillator circuits. Just how low can the frequency of an oscillator go using the .1-Farad capacitor as the C in the simple RC circuit? Never fear 'cause we're about to find out.

The oscillator circuit is shown in Fig. 5. Let's review how this simple circuit oscillates before getting into the low frequency operation. When the power is first applied to the circuit, the voltage across the capacitor is zero and so is the 4093's input gate. The gate's output is high supplying a positive charging current to the timing capacitor. As the voltage across the capacitor rises to the gate's input trigger level, the output switches low. This starts the discharge of the capacitor. When the capacitor's voltage drops to the gate's turn-off level, the cycle starts over and will repeat as long as power is applied.

This is all possible because of the unique hysteresis characteristics of the Schmitt-trigger gate. The gate's input turn-on voltage is greater than the turn-off voltage. This difference in input voltage is what allows the single gate to oscillate in the RC circuit configuration.

The RC values shown in Fig. 5 will produce a frequency of one complete cycle every two minutes. This is not the low end, but the highest frequency obtainable with this circuit while using the .1-farad capacitor. For lower frequencies just increase the value of R1 and stretch out the cycle.

Before leaving this simple oscillator circuit behind, there's one modification I want to share with you, shown in Fig. 6.

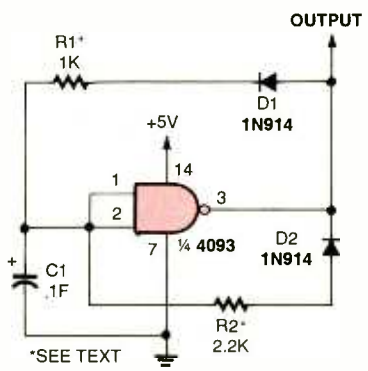

Fig. 6. The addition of two diodes and one resistor allows this circuit's on/off time to be adjusted independently. The capacitor's charging time is set with R1 and the discharge time by R2.

PARTS LIST FOR THE MODIFIED OSCILLATOR (FIG. 6)

IC1—4093 CMOS quad 2-input Schmitt trigger NAND gate
D1, D2—1N914 silicon diode
C1—.1-Farad/5.5-V_{DC} capacitor.
R1—1000-ohm, ¼-watt, 5% resistor (see text)
R2—2200-ohm, ¼-watt, 5% resistor (see text)

www.americanradiohistory.com

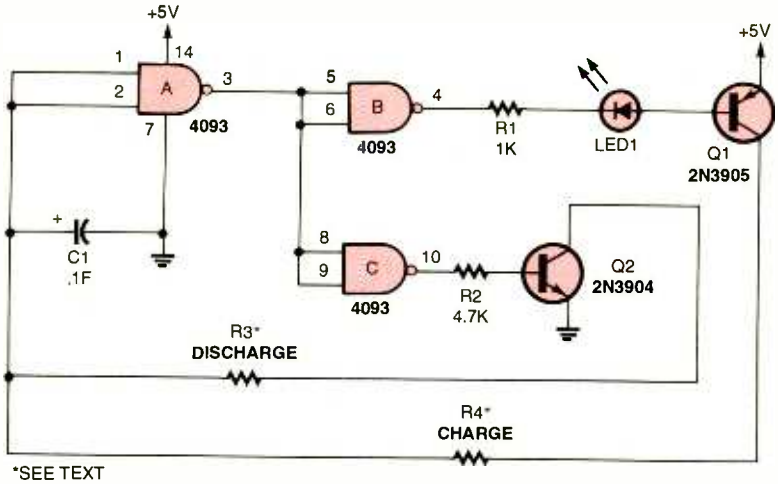

Fig. 7. This circuit increases the charging current by using a NPN transistor as the current supplier. A PNP transistor does similar work in discharging the timing capacitor.

PARTS LIST FOR "SPEEDING THINGS UP" (FIG. 7)

SEMICONDUCTORS

LED1— Light-emitting diode, any color
IC1—4093 CMOS quad 2-input Schmitt trigger gate
Q1—2N3905 PNP transistor
Q2—2N3904 NPN transistor

RESISTORS

(All resistors are ¼-watt, 5% units.)
R1—1000-ohm
R2—4700-ohm
R3, R4—See text

CAPACITORS

C1—.1-Farad/5.5-V_{DC}

The addition of two diodes and one resistor allows the circuit's on/off time to be adjusted independently. The capacitor's charging time is set with R1 and the discharge time by R2. To increase either time just increase that resistor value. By the way, this is an excellent circuit to use with much smaller capacitor values—but that's another story.

Speeding Things Up

An expanded and more versatile timing circuit using three of the 4093's four gates is shown in Fig. 7.

Gate A is still the boss sensing the voltage across the timing capacitor, while gates B and C are used as transistor drivers. The major problem with our previous circuit is the gate's ability to supply sufficient charging current fast enough to speed the timing cycle up. This circuit increases the charging current by using a NPN transistor as the current supplier. A PNP transistor does similar work in discharging the timing capacitor. The transistors can safely handle many times the maximum output current of the CMOS gates.

The cycle time with a charging resistor of 100 ohms (R4) and a discharging resistor of 2200 ohms is one cycle every 30 seconds. The cycle breaks down into about two seconds for charging and about 28 seconds for discharging. Increasing the discharge resistor to 10k

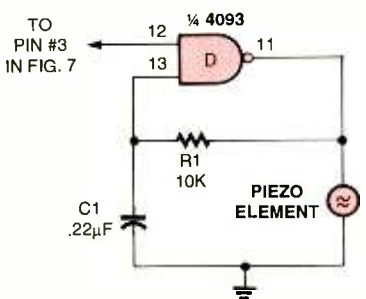

Fig. 8. The timer circuit in Fig. 7 activates the "Bawling Calf" circuit. Activation begins when pin #3 of gate A goes high to signal the timer circuit to charge C1. During this short time, the calf will call its mama.

PARTS LIST FOR PHANTOM ONE (FIG. 8)

IC1—Gate D of 4093 in Fig. 7
C1—.22-µF, ceramic-disc capacitor
R1—10,000-ohm, ¼-watt, 5% resistor (see text)
Piezo element, any type without built-in oscillator circuits

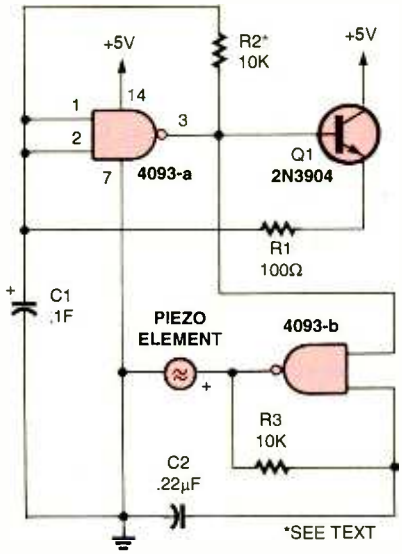

Fig. 9. Gate A is connected in our long-term timing circuit. with Q1 supplying the heavy charging current for C1, while gate B produces the nasty noise. T1 sets the charging time and R2 the discharging time.

PARTS LIST FOR VERSION TWO (FIG. 9)

SEMICONDUCTORS

IC1—4093 CMOS quad 2-input Schmitt trigger NAND gate
Q1—2N3904 NPN transistor.

ADDITIONAL PARTS AND MATERIALS

R1—100-ohm, ¼-watt, 5% resistor
R2, R3—10,000-ohm, ¼-watt, 5% resistor
C1—.1-Farad/5.5-V_{DC} capacitor
C2—.22-µF, ceramic-disc capacitor
Piezo element, any type without built-in oscillator circuit

extends the overall cycle time to one cycle every two minutes and fifteen seconds. That figures out to about 4.5 times that of a 2200-ohm discharge resistor. And 2200-ohms times 4.5 is very close to 10k, which make the discharge timing fairly linear.

Therefore a 100k-discharge resistor should produce a cycle time of about 22.5 minutes. Actual cycle time proved out to be 23 minutes.

Beware Of The Phantom

Now we're going to add a bit of devious fun to our circuit and turn it into an electronic phantom that mysteriously appears for a second or two and then disappears for hours. Friends will ask, what was that noise and where did it

www.americanradiohistory.com

come from? What noise? I don't hear anything. Now you got 'em going for sure. Plant two phantom-circuits in a room with different time periods and really jack up the frustration factor.

Version one of the phantom circuit is a simple addition to our last long-term timer circuit. We have one of the 4093 gates left over that's just waiting to become the noise-generating circuit. The circuit appears in Fig. 8. The circuit should look very familiar, because it's our basic timer circuit operating at a fast rate producing a nice irritating sound like a forlorn baby calf bawling for it mother. The bug factor is climbing higher.

The timer circuit in Fig. 7 activates the "bawling calf" circuit. Activation begins when pin #3 of gate A goes high to signal the timer circuit to charge C1. During this short time, the calf will call its mama. The sound-delivering device is a piezo element without a built-in sound generator circuit; these are available in many shapes and sizes, and most any will work here.

If a different sound-effect is desired, fiddle with the values of C1 and R1. Making either larger in value will lower the output frequency and smaller values will increase the frequency.

Version Number Two

A two-gate, one-transistor version of our irritating circuit is shown in Fig. 9. Gate A is connected in our long-term timing circuit, with Q1 supplying the heavy charging current for C1, while gate B produces the nasty noise. T1 sets the charging time and R2 the discharging time. The irritating output sound remains on during the charging time and off during the discharging time.

The behemoth memory backup capacitors we've been playing with are more commonly found operating behind the scenes in tons of electronic devices we all use today. Maybe that's why it's so much fun to find other uses for these types of devices. Here's a circuit challenge—come up with some different uses for these micro-jumbo capacitors and maybe we'll share some of them with all of our circuit-building friends.

Until next time, good circuitry to all! P

SERVICE CLINIC

(continued from page 53)

- If there is nothing between it and the power jack, then polarity will be that of the cap and you will have an upper bound on voltage (but the actual safe operating voltage will probably be considerably less).

- If there is a diode in series with the cap, then the voltage and polarity will be as above (except for the 0.7 or so V diode drop), and the device is probably designed to operate on DC (and possibly AC but there may not be enough filtering).

- If there is a bridge rectifier or multiple rectifier diodes between the input and any DC loads, it is probably designed to operate on AC.

- If the device also has a battery compartment and the battery powers the device the same way as the adapter (possibly with one connection going through a diode or an interlock on the power jack), then the AC adapter polarity and voltage will be the same (± 0.7 V or so) as the battery. However, some devices use totally different means of powering themselves with battery and AC operation!

If you have a multimeter for which you know the polarity of its output on the ohms ranges (VOMs may be reversed from the probes; DMMs are often the same—this can be determined by testing a diode or with another meter), then test on the low ohms range first in one direction, then the other. This is like applying a very low safe voltage to the device:

- Open in one direction and a charging cap (resistance starts low and increases relatively slowly) indicates a series diode (protection or a rectifier). The probe polarity where the cap is charging is the correct one. (Note: once the internal caps charge up, reversing the leads again may result in an apparent open reading.)

- A diode drop in one direction and charging cap in the other indicates a parallel-protection diode. Again, the slowly charging direction is correct.

- Symmetric behavior may indicate it is supposed to use AC. However, this could just mean that a filter cap is directly across the input and DC is required.

Anything else will probably require you do one of the first few checks. Except for manufacturer supplied information, even these are no guarantee of anything! Once AC versus DC and polarity (if relevant) are determined, start low on voltage to see at what point the device behaves normally. Depending on design, this may be quite low compared to the recommended input voltage or very near it—no way to really know. Devices with motors and solenoids may appear to operate at relatively low voltage but fail to do the proper mechanical things reliably if at all. RF devices capable of transmitting may behave similarly when asked to transmit. Devices with more constant power requirements may operate happily at these reduced voltages. However, depending on the type of power supplies they use, running at a low voltage may also be stressful (e.g., where DC-DC converters are involved).

NOTE: Some devices with microcontrollers and/or logic will require a fast power turn-on so it may be necessary to switch off and then on for each input voltage you try for proper reset. Again, determining the requirements from the manufacturer is best!

Wrap-up

It would have been nice if AC adapters could have been standardized like computer power cords. Unfortunately, this hasn't happened and we are stuck with a zillion different types. With the help of this article, it should at least be possible to avoid damage from use of an improper adapter and to be able to select one that will keep your equipment happy.

I welcome feedback of almost any kind (via e-mail only please to sam@repairfaq.org). And there is much more repair, general electronics, and laser and optics information on my Web site, *www.repairfaq.org*. P

www.americanradiohistory.com

Poptronics® SHOPPER®

WWW.POLARISUSA.COM **OVER 700 PRODUCTS IN STOCK!!!** **800-308-4626**

MICRO CAMERAS - WIRELESS VIDEO — CALL OR GO ON-LINE TO ORDER YOUR FREE COLOR PRODUCT CATALOG — LIPSTICK CAMERAS - DIGITAL RECORDERS

DIGITAL MONITORING & RECORDING SYSTEM

"YOUR WEB BROWSER IS YOUR REMOTE EYE!"

The **PV-140 Series** PCI cards are the solution for digital security using a PC.

The **PV-140 Series** integrates a color quad processor, multiple zone video motion detector, multiplexer, and a real time digital video recorder (DVR).

PV - 140-A - $299.95

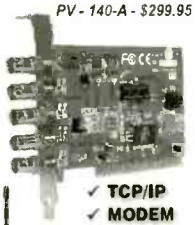

✓ TCP/IP
✓ MODEM
✓ LAN/WAN

PV-140-C

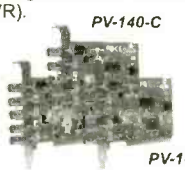

PV-140-D

PV-140-B

Works Great With Our Wireless Receivers, Too!

Each card can connect up to 4 cameras

GFR-2400 - 2.4GHz Receiver

MOTION DETECTION - ALARM RECORDING - NOTIFICATION

1/3" COLOR OUTDOOR CAMERA

This camera merges the gap between bullet or lipstick cameras and full-size housings with cameras. Unlike bullet or lipstick cameras with limited features, this unit has many features only found on larger, cased cameras.

6 Configurations

- B/W: Regular, Auto Iris, Vari-Focal Lens
- Color: Regular, Auto Iris, Vari-Focal Lens

Industrial "O" Ring Sealed, Aluminum Case

AV-48WC8 - $235.95

Made in the USA

TIME LAPSE RECORDER

The **CTR-024** is a 4 head Helical Scan Azimuth System which offers 350/300 TV lines of resolution (B/W / Color)). Maximum recording times are adjustable and include 2/12/24 hours. There are five different programmabie recording modes built-in. Each unit has a time/date display and a 30 day Battery Backup.

CTR-024 - 299.95

This is an excellent recorder for the price!

(Portable 12V DC Models Available)

5" COLOR WIRELESS OBSERVATION SYSTEM

ADD UP TO 3 ADDITIONAL CAMERAS!

2.4GHz

Now you can enjoy peace of mind with our new wireless observation system. Comes with a 5" wireless color monitor, a wireless color camera. Just Plug-&-Play for perfect wireless video any time! Great for around the house, office or technical field work.

GW-2400SA - $379.95

B/W INFRARED LIPSTICK CAMERA

Whether using this indoors or outdoors, the benefits of this compact, discreet miniature color camera are extraordinary. The infrared LEDs make it excellent for video recording in low light situations up to a distance of 10 meters (32.8 feet). The weatherproof anodized aluminum housing and adjustable brackets for wall or ceiling mounts make this an ideal camera in a variety of applications.

ILC-300 - $189.95

HIGH GAIN DIRECTIONAL PATCH ANTENNAS

The Patch or Panel Antenna elements are temperature stable with a low return loss and low frequency drift vs. temperature. They offer heavy duty use, yet are lightweight construction.

DA- - $29.95

DA-12 - $119.95

2.5" COLOR TFT FLAT SCREEN MODULE

Our new **color 2.5" TFT module** can be used for a variety of purposes such as; custom automotive dash installations, boat installations, covert ultra-compact surveillance packages, and more.

(Driver board not shown)

UNIT IS ONLY 5.8mm THICK!

TFT-M25 - $139.95

Dimensions: 61.6(L) x 49.3(W) x 5.8(H)mm

MICRO BOARD CAMERAS

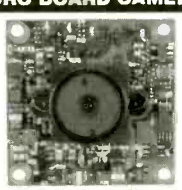

MB-1250P Color Camera
32.5(L) x 32.5)W) x 12(D)mm

RECHARGEABLE BATTERY PACK

This 12 Volt, high-capacity portable battery is rechargeable and will operate any of our 12V cameras, transmitters and TFT Monitors. It has a charge time of 4 hours and allows for a total of 2000 re-charges.

RBP-12V - $69.95

VIDEO MOTION DETECTOR

The **VDM-01** is the answer to wasting hours in front of a monitor searching for the event that occurred. This 4-zone video detection unit will allow you to place 4 areas of interest on the camera screen. The sensitivity can also be adjusted so false triggers do not set your VCR to record. Imagine a zone on the cash box or a zone on just one bin box in your inventory room. No more watching hours of uneventful video on your surveillance tapes. Set-up one of these systems as part of your office or company wide security system and you will be amazed. This is a great management tool for revealing the non-productive habits in the office. This system is compatible with any time-lapse or real time recorder with alarm inputs.

VDM-01 - $199.95

800-308-4626
Tech 404-872-0722 • Fax 404-872-1038

WWW.POLARISUSA.COM

POLARIS INDUSTRIES
470 Armour Drive NE • Atlanta GA 30324-3943

CIRCLE 228 ON FREE INFORMATION CARD

www.americanradiohistory.com

PICMICRO TOOLS

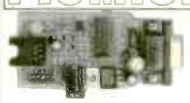

ISP-PRO 3.0

All-in-one Programmer

- Uses PC Serial port (USB w/ adapter)
- Very Simple to use
- Free Software updates
- Complete with Windows IDE!
- Easy in-circuit programming
- Supports PIC, Scenix, I2C and more!
- Firmware upgradable!
- RJ-11 / 10 Pin Header
- Includes RJ-11 Cable

Optional Items Available:
- Plastic Enclosure Available
- 40 Pin Zif Adapter All-in-one
- Universal Adapter

All for $59.95 Complete

Solderless Development Boards

Develop your projects the easy way

- Completely Assembled Board
- In Circuit Programmable (ISP)
- Solderless Bread Board
- Built in RS232 (w/ Max232)
- Built in Power Connector
- Removable Oscillator
- Documentation
- Auto Disconnect for RB3, RB6, & RB7
- Available in several models

Starting at $49.95

Join our online PIC forums
tons of information and help *FREE!!!*

VISA • Master Card • American Express
Order Online or Call 1-734-425-1744
Basic Micro, 34391 Plymouth, Livonia, MI. 48150
See more online at http://www.basicmicro.com

CABLE SECRETS!!!

Build your OWN cable box "test" devices!

Why pay $100.00 or *more* for a "test" device that someone *else* made? Make your own! Includes complete source code and plans for the most commonly used cable boxes. *Unlock all of the channels on your box!*

Or start your own lucrative business!

Complete source code $79.95
Code for individual boxes $29.95

DSS SECRETS — Vol. 2

Step-by-step instructions on programming your own DSS access card. *Unlock all channels on your own card!* This is the most current information on the market! Includes software, plans, and hardware sources. Book & CD-ROM.

DSS Secrets Vol. 2 ..... $49.95

VISA • MasterCard • AmericanExpress
To order, call Worldwyde @ 1-800-773-6698
33523 Eight Mile Rd. #AJ-261 • Livonia, MI 48152
Visit us on the web at www.worldwyde.com

PROGRAM PIC®'S IN BASIC

MBASIC for PICmicro® MCU's

Ever wanted to learn how to program PICmicro® MCUs ? Now you can with easy to use BASIC. Our software is much simpler than C or Assembly. MBasic for PICmicro® MCUs creates a one click solution that allows you to experiment and test code changes on-the-fly! From beginner to professional, bring your projects to life quicker and easier with MBasic for PICmicro® MCUs !

***New* - In Circuit Graphical Debugger built in!**

Priced from $99.95

Educational and dealer discounts available

Order online or call 1-734-425-1744
Basic Micro, 34391 Plymouth, Livonia, MI 48150
See more online at http://www.basicmicro.com

PCBexpress

www.pcboxpress.com

- *No tooling charge!*
- *Lot charges start at $80*
- *Simple order process*
- *Quickturn, low quantities*

TWO SERVICES FOR
CIRCUIT BOARDS

ECD

INSTANT
ON-LINE QUOTES!
(No sign-up required)

PCBPRO

www.pcbpro.com

- *Quick Price Comparisons*
- *More options and added features*
- *Prototype & production quantities*

SUPREME SURVEILLANCE

JUST PUBLISHED! The **EXTREME** Covert Catalog details virtually every surveillance system on the World Market today. From the FBI (and their superiors) latest anti-terrorist phone/computer/and video taps, to bargain basement devices no one knows about.

Complete specs and ordering information on hundreds of surveillance and investigative hardware and software products from 14 countries. Many, many new entries for covert audio and video supplies, computer busters, thru-wall viewers, night vision gear, fax interceptors, CIA designed lock defeaters, etc.

"Absolutely fantastic! A Techie's dream come true. No fluff, no filler, just raw spy meat. Whata meal" - Kevin Murray, probably the top counter surveillance expert in the U.S. ECC, 8 1/2" x 11", ISBN 1-880-231-20-4, 437 pages, index. $49.95

Intelligence Here
404 N. Mt. Shasta Blvd.
Mt. Shasta, CA 96067
Order by Phone: 866-885-8855
www.intelligencehere.com.
Add $8.00 (priority shipping). CA residents add 8% tax.

PAiA

Theremin — 9505K Kit $89.75
The PAiA Theremax uses the same heterodyne principles as the original turn of the century instrument for classic tone and adds features made possible by modern ICs. *Shown with optional lectern case.*

FatMan Analog MIDI Synth — 9308K Kit $154.00
A complete music synthesizer with all the big bottom and phat sound that makes analog famous. 20 knobs and controls for real-time sound sculpting. Compatible with standard MIDI sources like keyboards or computers. *Desktop case or rack panel available.*

Check out http://Paia.com for schematics, tech details, firmware source files and more...

Synthesizer Modules, Guitar Effects, Mixers, EQs, Tube PreAmps, and dozens of kits for
ELECTRONIC MUSICIANS

PAiA Electronics
3200 Teakwood Lane
Edmond, OK 73013

info@paia.com
405.340.6300
fax 405.340.6378

Top Secret Consumertronics

In business 25+ years - established professionals

www.tsc-global.com

Exciting Hi-Tech Survival Books, Manuals, Tapes

Stopping Power/ KW-HR Meters/VHS
Cellphone / Cordless / Pager Manuals
Voice Mail /Answ.Machine Security
Phone Color Boxes/ Caller ID, ANI Sec.
Fax Machine / PBX Security
Computer Sec./Hacker Files/Dirty2Doz
Internet Security / Frauds/Tracking
Beyond van Eck Tempest / VHS
Polygraph Secrets/ Identity Theft Manual
Cons & Scams Databook / Placak Rep.
ATM/CreditCard/Check/MO Security
Mind Control / Under Attack! / EMBB
Radionics Manual / Heal Thyself!
Stealth Tech / High Voltage Devices
Social Engin./Ultimate Success Manual
Remote Office / Casino Secrets - *100 more!*

Descriptions, Prices, Policies in Catalog
Consumertronics
P.O. Box 23097, ABQ, NM 87192
505-321-1034 - Printed Catalog $3

QUICK and PAINLESS Programmable Robotics!

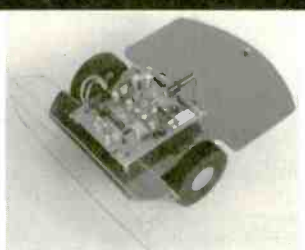

- COMES PRE-ASSEMBLED
- PRICED LOWER THAN A KIT
- Great Features & Expandability
- Re-Programmable from your PC

JUST ADD 6 AA BATTERIES AND GO!

Blue Bell Design Inc.

www.bluebelldesign.com

Scrambling News

915 NW First Ave., Suite 2902
Miami FL, 33136, 305-372-9427

Pay TV and Satellite Descrambling 2002 - New! - satellite and cable. Includes the latest information. $19.95 plus $1.75 shipping.

Hacking Digital Satellite Systems Video 2002 - New! - This 90 minute video focuses on the satellite television piracy business. $29.95 plus $ 3.50 shipping.

Scrambling News Online - Online service for those interested in satellite television news. $59.95/year.

Pay TV and Satellite Descrambling Series CD-ROM - all 13 volumes over 300 pages, $59.95 plus $3.50 shipping.

Best Deal - Everything listed above for only $99.95 plus $3.50 shipping.

www.scramblingnews.com

www.americanradiohistory.com

PIC Programmer Kits

Super Value! $16.95 +S&H $4.95*

The P16PRO: can program up to 40 pin PICs including the popular 16F84 & 12C508 • Needs software (extra $20) • Available assembled or starting from $16.95 for the kit.
See www.electronics123.com for more info!
The PICALL programmer can also progam Atmel AVRs in addition to the PICs it can program • Free software • PICALL programmer kit at $69.95
See www.electronics123.com for more info!

Video Camera module

Code:BB004

CMOS Camera Module, Black & White, Size: 0.63"x0.63"x0.59"H. Lens: f4.9, F2.8. EIA 320Hx240V. 0.6" DIL Package. 5 pins. Pin 3 is 1V p-p composite video (75 ohm) to monitor. $36 + $5 S&H

Running Lights kit

Add $6 for 8 triacs to drive light bulbs

8 LEDs with 10 push button selectable patterns. 8 speed levels! 80 combinations! $16 + $5 S&H

Toll Free: 1-888-549-3745 (USA & Canada)
Tel: (330) 549-3726. Request a FREE catalog or visit us at: www.electronics123.com for more products.
Amazon Electronics, Box 21 Columbiana OH 44408

Solar Panels

160 mW / Sun 8 Cells

200pc	2Kpc	20Kpc	200Kpc
$2.00 ea	$1.80 ea	$1.71 ea	$0.85 ea

Battery Holders

AA Singles, and Dual Side by Side

200pc	2Kpc	20Kpc	200Kpc
$0.40 ea	$0.36 ea	$0.34 ea	$0.17 ea

LED's

High Intensity HPWT-DL00
Similer to Lumex type SSL-LX30448SYC

200pc	2Kpc	20Kpc	200Kpc
$0.50 ea	$0.45 ea	$0.43 ea	$0.21 ea

Call 1-847-612-2739

spyoutlet.com

Security • Surveillance • Loss Prevention

Purchase your video cameras from *one of the largest importers in the U.S.*

- NEW *weatherproof* Bullet Cameras
- *Spy Pinhole Cameras* • Wireless Video
- PC Cards • Voice Changer
- Micro Recorders • Shotgun Mic
- Locksmithing • Bug Detectors
- *NEW* Phone Sentry *Plus—defeats* telephone tapping and taping
- UV Pens & Powder • *Realtime 12 hr Telephone Recording System*
- GPS Vehicle Tracking System

And much more • Quantity discounts

www.spyoutlet.com
Printed Catalog send $5.00

SPY OUTLET 2468 NIA. FALLS BLVD
TONAWANDA NY 14150 (716) 695-8660

Press-n-Peel Transfer Film

PC Boards in Minutes

8.5" x 11" Shts.
* Or Photocopy
**Use standard household iron

1. LaserPrint*
2. Press On**
3. Peel Off
4. Etch

Use Standard Copper Clad Board
20 Shts $30/ 40 Shts $50/ 100 Shts $100
Visa/MC/PO/Ck/MO $4 S&H/Foreign Add $7

Techniks Inc.
P.O. Box 463, Ringoes NJ 08551
ph. 908.788.8249 fax 908.788.8837
www.techniks.com
Vist Our E-Store On-Line!

FIELD - STRENGTH RECEIVER - METER

A Handheld Counter-Surveilance Meter So Sensitive It's Like a Wideband Receiver!

BROADBAND: 10 MHz to 4.5 GHz usable range
HIGHLY SENSITIVE: Detects - Covert Video and Audio Bugs at 20 ft. - 2.4 GHz "sealed" microwave ovens at 40 ft. For Computer Wireless Setup, RF\ Sniffer, RF Line Leakage
DUAL MODE DETECTION: LINEAR - For measuring weakest signals; LOGARITHMIC - 1000:1 dynamic signal range
SENSITIVITY CONTROL: > 20 dB manually adjusted gain
80 HR. OPERATION (Approx.): With 2 AA alkaline batteries
ANALOG METER and LED DISPLAYS: The LED display for distance and nighttime
SILENT VIBRATE MODE: Switchable vibrator for signal detection without direct viewing

Including shipping and handling (CA. residents add 8% Sales Tax) $89

Alan Broadband Company
93 Arch Street
Redwood City, Ca. 94062

Phone : (888) 369-9627
Fax/Phone: (650) 369-9627

www.zapchecker.com

...made easy.

www.microCommander.com

Stepper Motor Book

NEW

Easy Step'n

- For the experimenter.
- Determine surplus stepper motor specs using simple easy to build test equipment.
- Build microcontroller-based control systems (flow charts and code examples).
- Build stepper motor drive circuits.
- Mechanical design considerations.
- 8.5x11 format. 205 pages. $34.95

Table of Contents: http://www.stepperstuff.com
+ $5 s/h in US. VISA, MC, AM, DS, MO, Check
CA residents please add 7.25% CA sales tax

SQUARE 1 ELECTRONICS
P.O. Box 501, Kelseyville, CA 95451
Voice (707) 279-8881 Fax (707) 279-8883

http://www.stepperstuff.com

TIMELINE INC.

Over 16 years and 33,000 customers and still growing
http://www.digisys.net/timeline
• email: mraa@earthlink.net

240x64 dot LCD with built-in controller
AND 4021ST-EO. *Unit is EL back-lit.* $29.00 or2 for $49.00 or
OPTREX DMF5005 *(non back-lit)* $29.00 or2 for $49.00

240x128 LCD *with built-in controller* $29.00 2 for 49.00
256x128 LCD *with built-in controller* $29.00 2 for 49.00

Alphanumeric-parallel interface

16x1	$5.00	16x2	$5.00
20x4	$8.00	40x2	$7.00
40x4	$15.00		

Certain models are backlit, call in for more info

Graphics and alphanumeric – serial interface

size	Mfr.	price	size	Mfr.	price
640x480 (backlit)	Epson	$15.00	256x128	Epson	$15.00
240x128 (backlit)	Optrex	$15.00	240x64	Epson	$15.00

57 WATT UPS SUPPLY $19.00
(12V @ 2.2AMP BATTERY $10.00) The outputs are +5 VDC @ 6.5A, + 3.6 VDC @ 2.5A, + 12 VDC @ .8A, - 12 VDC @ .5A, and a battery charging output of 12 VDC @ 10A

EMBEDDED 486 COMPUTER $59.00 2 FOR $109.00
Complete enhanced Intel 486SX-33 based computer in ultra small (9-7/8L x 6-5/8W x 3-1/8H) case.

NON – ENCLOSED TTL
5 inch Amber $15.00 • 7 inch Amber $19.00
• 9 inch Amber or Green $19.00

5" COLOR MONITOR $19.00 or 2 for $29.00

2539 W. 237th Street Bldg. F. Torrance, CA 90505

Order desk: USA: (800) 872-8878 LA/Tech. Info: (310) 784-5448 fax: (310) 784-7590
Visit our website for more product listings. Email us your mailing address to go on our mailing list. http://www.digisys.net/timeline

PICmicro MCU Development Tools

EPIC Plus
PICmicro Programmer
$59.95

Program PICmicro MCUs in BASIC!
DOS or Windows operation (Includes Windows IDE software).
PicBasic Compiler - $99.95
PicBasic Pro Compiler - $249.95

Experimenter Boards
LAB-X1 for 40-pin MCUs (shown) - $199.95
LAB-X2 for 28 or 40-pin MCUs - $69.95
LAB-X3 for 18-pin MCUs - $119.95

PICProto Prototyping Boards
$8.95 to $19.95
High-quality blank prototyping boards for PICmicro MCUs.

microEngineering Labs, Inc.
www.melabs.com
Phone: (719) 520-5323
Fax: (719) 520-1867
Box 60039, Colorado Springs, CO 80960

www.americanradiohistory.com

The BEST is now Better!

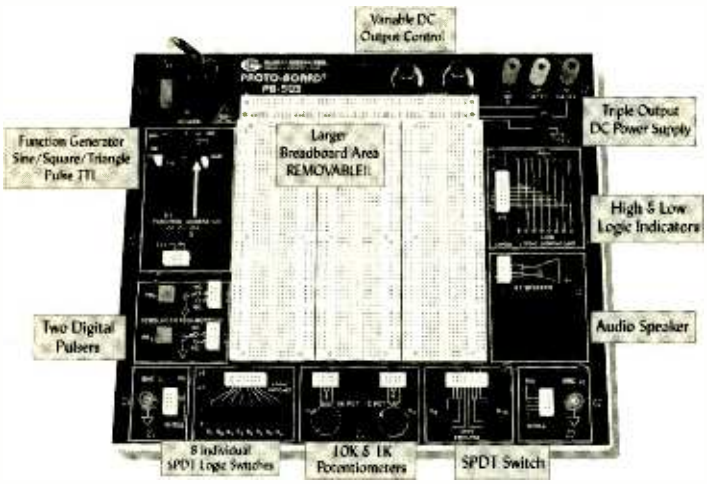

Feature-rich Circuit Design Workstation
Ultra-affordable at just $299.95

Portable Version Available for $349.95

Our classic PB-503 the complete Proto-Board Design Workstation is newly improved. Enhancements Include: an 8-Channel Logic Monitor, High & Low Buffered Logic Indicators, 8 Selectable Logic Switches, and Removable Breadboard Socket Plate. This velcro-backed socket plate allows for greater circuit design flexibility; order extra to suit your needs.

Traditional instrumentation on the unit includes continuously variable Function Generator, Triple Output DC Power Supply, along with Switches, Digital Pulsers, Potentiometers and an Audio Speaker. The highly functional PB-503 is built to last, with an industry best 3-year warranty along with a lifetime warranty on all breadboard sockets. Own the best! Order yours today.

GLOBAL SPECIALTIES
INSTRUMENTS

1486 Highland Avenue • Unit 2
Cheshire, CT 06410
1.800.572.1028
203.272.4330 FAX
www.globalspecialties.com

FACTCARDS

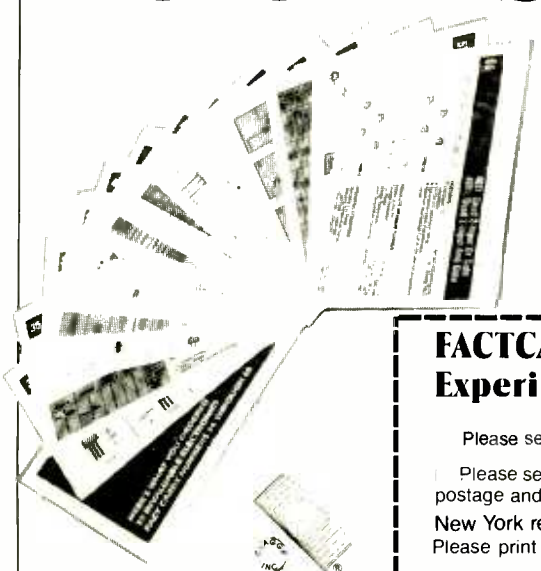

Jampacked with information at your fingertips

■ ALL YOU NEED to know about electronics from transistor packaging to substitution and replacement guides. FACTCARDS numbers 34 through 66 are now available. These beautifully-printed cards measure a full three-by-five inches and are printed in two colors. They cover a wide range of subjects from Triac circuit/replacement guides to flip-flops, Schmitt triggers, Thyristor circuits, Opto-Isolator/Coupler selection and replacement. All are clearly explained with typical circuit applications.

■ WANT TO EXPAND your knowledge of electronics? Do it the easy way by studying the Electronics Fact Cards. Do you travel to and from your job each day? Drop a handful of cards in your pocket before you leave, and the bus becomes a schoolroom! At home, you can build some of the projects and not only have fun building and using them, but learn how they work at the same time.

■ YOU'LL BE AMAZED both at how rapidly you learn with these cards, and how easy it is to understand. These new cards are available right now. Don't miss out. Send your check or money order today.

FACTCARDS—Facts at your fingertips for Experimenters and Project Builders!

Please send one copy of FACTCARDS $1.99. Shipping $2.00 (U.S. and Canada only).

Please send _____ copies of FACTCARDS. Total cost is sum of copy price and First Class postage and handling cost multiplied by number of card sets ordered.

New York residents add sales tax to total cost of each order.

Please print — Allow 6-8 weeks for the material to arrive.

_____
(Name)

_____
(Street Address)

_____
(City) (State) (Zip)

Detach and mail today:
CLAGGK Inc.
P.O. Box 12162
Hauppauge, NY 11788

All Payment must be in U.S. Funds!

BS168

www.americanradiohistory.com

Be an FCC LICENSED ELECTRONIC TECHNICIAN

EARN MORE MONEY

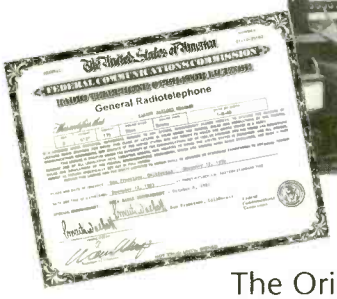

Earn up to $100 an hour and more!

The Original Home-Study course prepares you for the "FCC Commercial Radiotelephone License" at home in your spare time. This valuable license is your professional "ticket" to thousands of exciting jobs in:

- Communications
- Radio-TV
- Microwave
- Maritime
- Radar
- Avionics & more

You can even start your own business!

No previous experience needed! No need to quit your job or go to school. This proven course is easy, fast and low cost!

GUARANTEED TO PASS – **You get your FCC License or your money refunded.**

Send for FREE facts now!

Mail coupon today or call

(800) 932-4268 Ext. 240

www.LicenseTraining.com

COMMAND PRODUCTIONS
FCC LICENSE TRAINING - DEPT. 240
P.O. Box 2824 • San Francisco, CA 94126
Please rush FREE details immediately!

Name _____

Address _____

City _____ State _____ Zip _____

CIRCLE 321 ON FREE INFORMATION CARD

Graphic Interface with Touch screen control

Priced From **$140.00** Qty 1

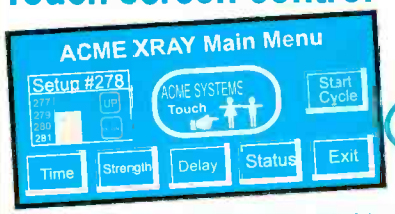

Easy Operator Interface through serial connection

Easy Interface with PC/104, 8051, 68HC11, PIC

Graphic display
Touch screen
Serial communication (RS-232C)
Eprom or Flash for screen storage
Only +5VDC power required
Easy to use development software
Create screens by PC paintbrush
Simple to place touch buttons software

Many Sizes Available

Designtech Engineering Co.
2001 S. Blue Island Ave.
Chicago, IL 60608
Phone 312-243-4700
Fax 312-243-4776

Many Types Indoor, Outdoor Factory, Ext. Temp. CCFL, LED Available

Embedded Computer Controller Also Available

www.designtechengineering.com

CONTROL
RELAYS • LIGHTS • MOTORS

MEASURE
TEMPERATURE • PRESSURE • LIGHT LEVELS • HUMIDITY

INPUT
SWITCH POSITIONS • THERMOSTATS • LIQUID LEVELS

MODEL 30 ..... $79

- PLUGS INTO PC BUS
- 24 LINES DIGITAL I/O
- 8 CHANNEL 8 BIT A/D IN
- 12 BIT COUNTER
- UP TO 14K SMP/SEC

MODEL 45 ..... $189

- RS-232 INTERFACE
- 8 DIGITAL I/O
- 8 ANALOG INPUTS
- 2 ANALOG OUTPUTS
- 2 COUNTERS-24 BIT

MODEL 100 ..... $279

- 12 BIT 100 KHZ A/D
- 4 ANALOG OUTPUTS
- 3 TIMER COUNTERS
- 24 DIGITAL I/O

MODEL 150-02 .... $179

- RS-232 INTERFACE
- TRMS, 20 AMPS
- 12 BIT A/D
- OPTO-ISOLATED
- COMPLETE DMM

MODEL 40 ..... $109

- RS-232 INTERFACE
- 28 LINES DIGITAL I/O
- 8 ANALOG INPUTS
- PWM OUTPUT

MODEL 70 ..... $239

- RS-232 INTERFACE
- 18 BIT A/D
- 5.5 DIGIT
- UP TO 60 SMP/SEC

Prairie Digital, Inc.

PHONE 608-643-8599 • FAX 608-643-6754

920 SEVENTEENTH STREET • PRAIRIE DU SAC, WISCONSIN 53578

CIRCLE 219 ON FREE INFORMATION CARD

www.americanradiohistory.com

CALL TOLL-FREE
(800) 292-7711
Orders Only
Se Habla Español

C&S SALES

Secure On-line Ordering @ cs-sales.com

CALL OR WRITE FOR OUR
FREE
64 PAGE CATALOG!
(800) 445-3201

Digital Multimeters

Elenco Model M-1740

$19.95

11 Functions:
- Freq. to 20MHz
- Cap. to 20µF
- AC/DC Voltage
- AC/DC Current
- Beeper
- Diode Test
- Transistor Test
- Meets UL-1244 safety specs

Elenco Model LCR-1810

$89.95

- Cap. 0.1pF to 20µF
- Inductance 1µH to 20H
- Resistance 0.01Ω to 2.000MΩ
- Temperature -20°C to 750°C
- DC Volts 0 - 20V
- Freq. up to 15MHz
- Diode/Audible Continuity Test
- Signal Output Function

Elenco Model LCM-1950

$65

- Large 1" 3 3/4 Digit LCD
- Autoranging Freq. to 4MHz
- Cap. to 400µF
- Inductance to 40H
- Res. to 4.000MΩ
- Logic Test
- Diode & Transistor Test
- Audible Continuity Test

LCR Bridge

B&K Model 878

$229

- Accurately measures capacitance, resistance, and inductance
- Measures dissipation factor of capacitors and Q of inductors.

Deluxe Soldering Stations

Elenco SL-5 Series

Electronically controlled, ideal for professionals, students, and hobbyists. Available in kit form or assembled.

As Low As
$24.95

Works w/ any iron! Turn any soldering iron into a variable iron.

Features:
- Cushion Grip Handle Soldering Iron (optional) with Grounded Tip for Soldering Static-Sensitive Devices. Easily Replaceable. Uses Long-Life, Plated Conical Tip.
- Heavy Steel, Non-Slip Base.
- Iron Holder Funnel - Reversible, left or right side.
- Steel Tray for Sponge Pad.
- Sponge Pad.

Quantity Discounts Available

Ordering Information:

Model SL-5 - No iron. (Kit SL-5K) $24.95

Model SL-5-40 - Includes 40W UL iron. (Kit SL-5K-40) $29.95

Elenco Model SL-30

$79.95

- Tip temperature changeable from 300°F (150°C) to 900°F (480°C).
- Temperature is maintained within +10°F of its preset temperature.
- The tip is isolated from the AC line by a 24V transformer
- The tip is grounded to eliminate static charges.

SL-10 - Same as SL-30 w/o digital display $54.95

Weller® Low Cost Soldering Iron Model WLC100

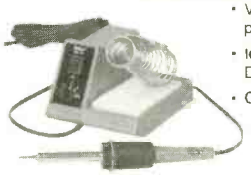

- Variable power control produces 5-40 watts.
- Ideal for hobbyists, DIYers and students.
- Complete with 40W iron.

$34.95

Test Equipment

Elenco Four Functions in One Instrument Model MX-9300B

Features:
- One instrument with four test and measuring systems:
  - 1.3GHz Frequency Counter
  - 2MHz Sweep Function Generator
  - Digital Multimeter
  - Digital Triple Power Supply

$450

Elenco 3MHz Sweep Function Generator with built-in 60MHz Frequency Counter Model GF-8046

$199.95

Generates square, triangle, and sine waveforms, and TTL, CMOS pulse.

GF-8025 - Without Counter $139.95

20MHz Sweep / Function Generator with Frequency Counter Model 4040A

- 0.2Hz to 20MHz
- AM & FM Modulation
- Burst Operation
- External Frequency Counter to 30MHz
- Linear and Log Sweep

10MHz Model 4017A	$325
5MHz Model 4011A	$259
2MHz Model 4010A	$225

$445

BK PRECISION

Elenco Handheld Universal Counter 1MHz - 2.8GHz Model F-2800

$99

Sensitivity:
- <1.5mV @ 100MHz
- <5mV @ 250MHz
- <5mV @ 1GHz
- <100mV @ 2.4GHz

Features 10 digit display, 16 segment and RF signal strength bargraph.

Includes antenna, NiCad battery, and AC adapter.

C-2800 Case w/ Belt Clip $14.95

Elenco RF Generator with Counter (100kHz - 150MHz) Model SG-9500

$225

Features internal AM mod. of 1kHz, RF output 100MV - 35MHz. Audio output 1kHz @ 1V RMS.

SG-9000 (analog, w/o counter) $119

Elenco Quad Power Supply Model XP-581

4 Fully Regulated Power Supplies in 1 Unit

$75

4 DC Voltages: *3 fixed*: +5V @ 3A, +12V @ 1A, *1 variable*: 2.5 - 20V @ 2A • Fully Regulated & Short Protected • Voltage & Current Meters • All Metal Case

Elenco Power Supply Model XP-603

$75

- 0-30VDC @ 3A Output
- 3A Fused Current Protection
- Current Limiting Short Protection
- 0.025Ω Output Impedance

Elenco 10Hz - 1MHz Digital Audio Generator Model SG-9300

$225

Features built-in 150MHz frequency counter, low distortion and sine/square waves.

SG-9200 (w/o counter) $119

Elenco Oscilloscopes

Free Dust Cover and 2 Probes

S-1325 25MHz Dual Trace	$325	S-1345 40MHz Delayed Sweep	$549
S-1330 25MHz Delayed Sweep	$439	S-1360 60MHz Delayed Sweep	$725
S-1340 40MHz Dual Trace	$475	S-1390 100MHz Delayed Sweep	$895

Deluxe 29pc. Computer Service Tool Kit

$36.95 Elenco Model TK-1200

Includes Soldering Iron, Solder, Long Nose Pliers, Diagonal Pliers, 11 pc. Screwdriver Bit Set, Wire Stripper, IC Inserter, IC Extractor, Screwdriver, Phillips Screwdriver, Desoldering Pump, and more!

Elenco Educational Kits

Model XK-150

Digital / Analog Trainer

$89.95

- 830-pin Breadboard
- 8 Data Switches
- 8 LED Buffered Readouts
- Built-in Function Generator (sine and square wave)
- Built-in Clock Generator
- Variable Power Supply

OWI Model OWI-007

Robotic Arm Trainer

$82.50

Model AK-780K

Two IC Radio Kit

$9.95

Model AK-700

Pulse/Tone Telephone Kit
Flashing Neon Lights
Great School Project

$14.95

Model RCC-7K

Radio Control Car Kit

$27.95

- 7 Functions
- Transmitter Included

Model M-1005K

DMM Kit

- Transistor Test
- Diode Test
- Overload Protection
- Pocket Size

$18.95

Model K4001

7W Amplifier

$12.95

Electronic Science Lab

Maxitronix 500-in-1 Electronic Project Lab Model MX-909

Everything you need to build 500 exciting electronic projects:
- Learn the basics of electronics. 500 different electronic experiments, special lighting effects, radio transmitter and receivers, sound effects, cool games and *MORE*!
- Includes built-in breadboard and an LCD.
- Explore amplifiers, analog and digital circuits plus how to read schematic diagrams.
- Includes 11 parts.
- Lab-style manual included.
- Requires 6 "AA" batteries.

MX-908 - 300-in-1 Lab	$59.95
MX-907 - 200-in-1 Lab	$44.95
MX-906 - 130-in-1 Lab	$29.95
EP-50 - 50-in-1 Lab	$18.95

$149

Guaranteed Lowest Prices

C&S SALES, INC.

15 DAY MONEY BACK GUARANTEE

2 YEAR FACTORY WARRANTY

UPS SHIPPING: 48 STATES 5% (Minimum $5.00)
OTHERS CALL FOR DETAILS
IL Residents add 8.25% Sales Tax

150 W. CARPENTER AVENUE
WHEELING, IL 60090
FAX: (847) 541-9904 (847) 541-0710
http://www.cs-sales.com

SEE US ON THE WEB

VISA

PRICES SUBJECT TO CHANGE WITHOUT NOTICE

CIRCLE 290 ON FREE INFORMATION CARD

www.americanradiohistory.com

Ivex Complete
Electronics CAD Package

Ivex Complete power tools include: WinDraft P350 Schematics, WinBoard P350 PCB Layout, Ivex Spice Standard Simulation, and Ivex View Gerber Viewer—together in a complete, affordable package.

Ivex Complete Plus includes everything in Ivex Complete but with the enhanced capabilities of 650 pin versions of WinDraft and WinBoard plus the Advanced edition of Ivex Spice.

Ivex 350 and 650 pin versions have no feature limitations like competitive products on the market. Fast expert technical support, free 24 hour Knowledge Base on the web, and professional full-featured tools have made Ivex the preferred choice for designers.

Ivex Complete
Schematics
Simulation
PCB Layout
Gerber Viewer
$350

Do you make electronic prototypes?

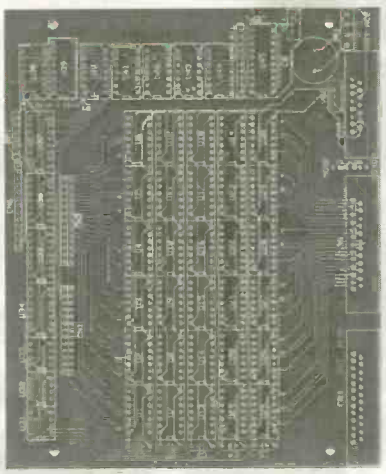

If you prototype electronics, you should be using WinDraft Schematics. The Rapid Electronic Development (RED) tool that gives you the power to design prototypes faster, resolve errors smarter and transition to professional boards better.

WinDraft is a multi-purpose schematic design tool that you can put to work right away to make professional looking electronic design schematics. Crisp, clean schematics are much easier to read than the old hand-drawn ones you've had to struggle with before. Creating the perfect prototype of your design just got easier!

WinDraft goes way past prototyping, though. Once your design is finely tuned, use WinDraft to connect to PCB Layout tools for high-quality circuit boards that really make a statement about your product.

Need some reasons to use WinDraft for your prototyping? Check out the facts:

http://www.ivex.com/prototyping

Free board quote
pcbCite.com
The Internet source for PCB manufacturing

Visit the Ivex web site for complete product information and download full-function

www.ivex.com

Tel: (503) 848-6520 e-mail: sales@ivex.com

IVEX™
DESIGN INTERNATIONAL

ADV8_5

www.americanradiohistory.com

Turn your PC into a 16-bit Storage Scope spectrum analyzer, and digital multimeter!

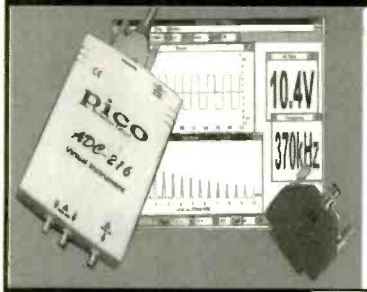

Turn your PC or laptop into a sophisticated storage scope & spectrum analyzer & multimeter. Display on large screen! Print in color! 100MS/s 8-bit, 1.2MS/s 12-bit or 333kS/s 16-bit versions. Great for test depts, schools. Input to Excel. LabView/NT drivers. High precision not high cost! Models from **$95 - $799!**

DrDAQ
science lab in a box!

great for science fairs!

DrDAQ is a sophisticated digital data-logger that plugs into a PC and comes with sensors for light, sound, pH and temp. Lots of suggested science experiments included which can be done from software supplied. Spectrum analyzer/scope/meter all at once! **DrDAQ** from only **$99!**

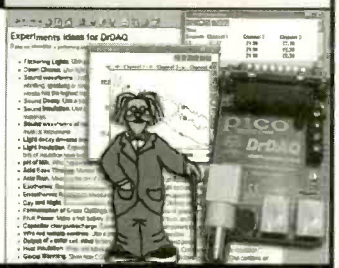

www.saelig.com

RS232-422/485 converters, self-powered, opto-isolated
I2C adapter boards for PC communication with I2C bus
Mini dataloggers for events, voltages, pressures, etc.
Enviromon temperature and environment netwk logger
Thermocouple and **thermistor** adapters for PC ports.
BASIC-programmable **BASIC-TIGER** controller modules
JANZ CANbus boards - from Germany's leader!
SMD adaptor boards for prototyping with any SM parts!

1-888-7SAELIG

Saelig Company
www.saelig.com saelig@aol.com
716-425-3753 • 716-425-3835 (fax)

EMBEDDED LINUX
STARTER KIT

FEATURES INCLUDE:
- Linux 2.4 Kernel
- 486-133MHz SBC
- 10 Base-T Ethernet
- 8MB DOC Flash Disk
- 16MB RAM
- Power Supply
- Carrying Case
- Starting at $399.00
- X-Windows (option)
- RealTime Linux (option)

Imagine running Embedded Linux on a Single Board Computer(SBC) that is 4.0" x 5.7" and boots Linux from a Flask-Disk. No hard drives, no fans, nothing to break. Now your hardware can be as reliable as Linux! If your application requires video output, the X-Windows upgrade option provides video output for a standard VGA monitor or LCD. Everything is included; Ready to Run Linux!

Since 1985 OVER 17 YEARS OF SINGLE BOARD SOLUTIONS

EMAC, inc.
EQUIPMENT MONITOR AND CONTROL
Phone: (618) 529-4525 • Fax: (618) 457-0110 • www.emacinc.com

Start A Career With High Wages, Excellent Benefits and Job Security!!

With UCANDO's extraordinary maintenance training programs you can quickly and easily enter a high paying field as a maintenance technician for a very small investment of time and money.

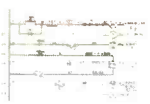

RC-M ONLY $165 RC-M is a 15 hour training course on relay ladder logic systems. Includes a 5-part video and workbook. **Great Value!**

PLC-M ONLY $198 PLC-M is a 32 hour training course on PLC systems. Includes (2) 4-part video's and workbook. **This training is valuable.**

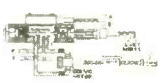

HYD-M ONLY $209 HYD-M is a 32 hour course on Fluid Dynamics. Includes (2) 4-part video's and workbook. **This Module is a must.**

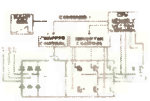

SC-M ONLY $215 SC-M is a 32 hour training course on AC & DC Servo Controllers. Includes (2) 4-part video's and workbook. **Learn everything you need about AC and DC servo Control Systems.**

Electronic Training Videos: Basic Electronics, Digital Electronics, TV Repair, LASER and Fiber Optic training videos available at very affordable prices starting at **Only $35.00 each.**

For information or to place an order call:

1-800-678-6113
www.ucando-corp.com
UCANDO VCR Educational Products Corp., Greenville, OH

SERIAL LCDs

Serial LCDs work great with BASIC Stamps® and other microcontrollers. One-wire interface • simple serial protocol • low cost • high quality • in stock

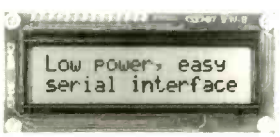

BPI-216N
- 2x16 text LCD
- 2400/9600 bps
- $45 (non-backlit)

SGX-120L
- Mini graphics LCD
- 2400/9600 bps
- just $99

Many other models available—see www.seetron.com!

Scott Edwards Electronics, Inc.
www.seetron.com • 520-459-4802

www.americanradiohistory.com

Electronics & Computer Training

FREE Course Catalog!

Cleveland Institute of Electronics

No matter what your career goals may be, most employers still insist on an educational background. Cleveland Institute of Electronics (CIE) offers educational training in Electronics and Computer Technology that lead to Diplomas and Degrees.

Even if you have no experience in the high-tech workplace, CIE can give you the hands-on education you need to maximize your career potential. Experience a step-by-step program designed specifically for the independent study student.

Our patented teaching method allows you to complete each lesson at your own pace so you can *study at times that are most convenient for you!*

A Wide Range of Electronics & Computer Training Available!

You'll find many different CIE Career Courses ranging from our **Computer Programming** course to our **Electronics Technology with Laboratory** course to our most advanced program, CIE's **Associate in Applied Science in Electronics Engineering Technology.**

Every program includes all the tools, lab equipment and instructor support necessary to compete in the 21st century job market.

After successful completion of a Career Course, you'll receive a diploma. Continue in your studies and you can earn an Associate in Applied Science in Electronics Engineering Technology.

There are many other courses to choose from so you can get the exact job-training course that's right for you!

Build on what you already know!

You may be eligible to apply for advanced standing in CIE's A.A.S. Degree Program based on your previous military training or academic history.

Send for a FREE Course Catalog Today!

Fill out the form on this page or call CIE toll-free at **(800) 243-6446** or visit us at **www.cie-wc.edu** and we'll send you a complete information package with our course catalog & tuition prices.

CIE 1776 E. 17th
Cleveland, OH 44114

Name _____

Address _____

_____

Apt _____

City _____

State _____

Zip _____

Phone _____

e-mail _____

Check box for G.I. Bill Details:

☐ Active Duty ☐ Veteran

PT30

Call 1-800-243-6446 for a FREE catalog or visit www.cie-wc.edu today!

CIRCLE 320 ON FREE INFORMATION CARD

www.americanradiohistory.com

MODERN ELECTRONICS

Cable TV Descramblers

Buy 1 Descrambler, Get the 2nd for 1/2 Price

COPY RENTAL TAPES WITH OUR VIDEO STABILIZERS

- 30 DAY FREE TRIAL!
- FREE PRODUCT CATALOG!
- BEST DEALER PRICING!
- 100% MONEY BACK GUARANTEE

1-800-906-6664

2609 S. 156th Circle • Omaha, NE 68130

http://www.modernelectronics.com

Do You Repair Electronics?

Repair Databases for TV, VCR, Monitor, UL Audio, FCC, and more.

- Over 76,000 records
- Private user forums
- Live on-line chat rooms

RepairWorld.com

Electronix Corp 1 Herald Sq. Fairborn, OH 45324 (937) 878-9878

SINGERS! REMOVE VOCALS

Unlimited Free Backgrounds from Original Standard Recordings!

Thompson Vocal Eliminator™ VE-4 Free Brochure/Demo

24 Hour Demo/Info Line (770)482-2485 - Ext 49

LT Sound Dept PE-1 7980 LT Parkway, Lithonia, GA 30058

Internet www.LTSound.com

Better Than Karaoke For Over 25 Years!

Poptronics SHOPPER

ORDERS: WWW.CONITEC.NET

$333 COMPLETE KIT

GALEP 4 UNIVERSAL PROGRAMMER

Introducing a pocket programmer with true **Universal Output**

Latest generation pocket sized programmer uses ASIC universal pin driver technology. 1300+device library, with lifetime free updates. Programs 8/16-bit EPROM'S, EEPROM's, 0-Power RAM, FLASH, Serial EEPROM's, GAL, PALCE, microcontrollers such as 87/89xxx, PIC, AVR, ST62, etc*. Low voltage devices down to 1.3V. No adapter required for DIL devices. 8 Hrs. operation on battery (AC charger included). Runs **WIN 98,NT,ME, 2000,XP** with Hex/Fuse Editor. Remote control from other apps, (e.g. VisualBasic. Substitutes higher priced universal programmers e.g. ALL-11 (HILO) or LAB-TOOL-48 (ADVANTECH) Providing virtually matching performance at only 1/3-1/5 the price. Info. / Orders, call : **619-702-4420**

CONITEC DATASYSTEMS - 1951 4TH AVE, SUITE 301 - SAN DIEGO, CA 92101 - TEL: 619-702-4420 FAX: 619-702-4419

HIGH QUALITY FM

BROADCAST EQUIPMENT

- SINCE 1990 -

You know you want it! We've got it: *LPFM & High Power*, Stereo FM Transmitters, RF Amplifiers, Low Pass Filters, Antennas, Mixing Boards, Microphones, CD Players, Compressor/Limiters, Digital Reverbs, Automation Software, Studio to Transmitter Links, Emergency Alert Systems, RF Test Equipment, Kits, RF Parts, and much more. Best Prices, Highest Quality. Give Us A Call or Buy It Online...

www.progressive-concepts.com

305 SOUTH BARTLETT ROAD, STREAMWOOD, IL 60107

VOICE: (630)736-9822 FAX: (630)736-0353

World's Smallest 68HC11 Microcontroller Modules!

MicroStamp11™

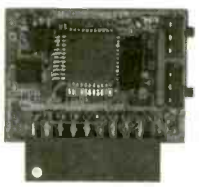

- *telemetry*
- *microrobotics*
- *smart toys*
- *animatronics*
- *model railroading*
- *home automation*

- tiny, light-weight (0.5 oz.)
- 1-inch x 1.4-inch 68HC11 module
- on-board 5V regulator
- 8MHz crystal (9.83MHz on Turbo version)
- choice of 8K or 32K EEPROM
- 32K RAM + 32K EEPROM on 64K version
- plugs into your breadboard like a DIP
- SCI (UART), SPI, Output Compares, Input Captures, harware timer, pulse accumulator
- all 14 I/O lines and 2 interrupts brought out to versatile 20-pin connector
- program in BASIC, assembler, or C
- easy code-loading with Docking Module
- Starter Packages:*

8K EEPROM (#MS11SP8K).....$49
32K EEPROM (#MS11SP32K).....$77
32K EE+32K RAM (#MS11SP64K)...$90

** includes MicroStamp11, manual, PC software (freeware assembler, SBASIC compiler, MicroLoad utility, and sample programs), serial cable, Docking Module, and accessories.*

Attention OEMs:
Embed MicroStamp11 modules into your product! only $20 each (100-pc. price, 8K version)

MicroCore-11™

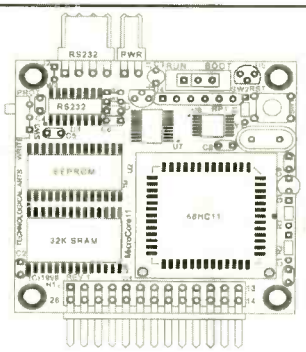

- tiny 2-inch x 2-inch 68HC11 module
- 12 inputs/outputs plus 8 analog inputs
- RS232, 5V regulator, 8MHz crystal
- 32K SRAM plus 8K or 32K EEPROM
- plugs into your breadboard like a DIP
- easy programming from any PC
- ideal for building MicroMouse robots
- now available in Turbo version (9.83MHz)

8K Starter Package #MC11SP8K.....$68
32K Starter Package #MC11SP32K.....$93
Motor driver boards, LCD/keypad/keyboard interface & prototyping cards available

Technological Arts

Many other modules & accessories available.
Visit our website at:
www.technologicalarts.com
sales@technologicalarts.com
TOLL-FREE: 1-877-963-8996
Phone: (416) 963-8996
Fax: (416) 963-9179
Visa • MasterCard • Discover • Amex

www.americanradiohistory.com

AMAZING DEVICES

NVENODD102

See in Action video on our web site at www.amazing1.com

Tesla Lightning Machine

- 2 to 3" Spark Discharges
- 12 VDC/115 VAC/battery
- Safe High Frequencies
- Adjustable Output and Optional Timer

TLITE Plans...$6.00 **TLITE1K**-Kit/Plans...$39.95
TLITE10-Assembled and Tested.....$54.95

Ion Ray Guns

Star Wars Technology Directs Energy

Star Wars Technology Demonstrates Weapons Potential, Force Fields, IonMotors, Antigravity etc *Projects electric shocks without contact!!* Conduct many weird and bizarre experiments. Handheld battery operated and easy to operate.

IOG9 Plans.....$10.00
IOG9K Kit/Plans.....$129.95
IOG90 Assembled/Tested.....$199.95

Mind&Brain Controllers

Incredible device Turbo charges memory, Boost mental powers, Controls stress, Speeds up healing processes and Uncover hidden potentials. High quality unit with many features.

PROTEUS Readyto use.....$199.95
ORION Lower cost unit.....$129.95

Shocker Trigger Ignitor

Variable 20,000 volt pulser used for laser flash tube, spark gap and pyro ignitor, garden pest shocker, electric fence, snake venom removal etc. 12 volt battery operation.

TRIG1K - Kit/Plans.....$29.95
TRIG10 - Lab Assembled.....$49.95

New Health Concept

Pulsed magnetic breakthrough provides miraculous healing and rejuvenating properties.

THMAG10 Magnetic Pulser.....$24.95

Mini TESLA Coil

Lights up a 4' fluorescent tube-all without any contact!! Yet only 3" tall!

MTC1K Kit/Plans.....$24.95
MTC10 Assembled.....$34.95

Ultrasonic Painfield Generators

For property and personal protection. Four transducer matrix Intensifies and concentrates effect on target area.

PPF4 Plans.....$20.00
PPF4K Kit.....$199.95
PPF40 Ready to use.....$299.95

3 Mi Voice Transmitter

Crystal clear . Many applications. Easy to build

FMV1 Kit and Plans..$39.95

Body Heat Telescope

Detects living bodies over 300' Heat leaks etc. Built in chopper and sens control

BHT6 Plans..$10.00 **BHT6K** Kit....$99.95
BHT60 Ready to use.....$149.95

Ultra Bright Green Laser

30 to 50x brighter than most red pointers!! Full 5 mw range in excess of 6000 feet !! Includes x7 range extender plans and lenses

LAPNGR5 Pointer.... $Call for Price!!

Low Cost 100,000 Volt DC Supply

Amateur experimenters source of HVDC for many applications

- 100,000 volts at .2ma
- Built in dry filled multiplier.
- Operates on 12vdc or115vac

HVOLT1 - Plans.....$8.00
HVOLT1K - Kit/Plans.....$149.95
HVOLT10 - Assembled....$249.95

Combo Tesla Coil, Jacobs Ladder, Plasma Tornado

Amazing and bizarre effects turn a normal light bulb into a spectacular plasma display!! With adjustable frequency control. Safe 12vdc input

TCL5 Plans..$8.00 **TCL5K** Kit/Plans..$59.95
TCL50 Assembled and Tested.....$99.95

Mass Driver

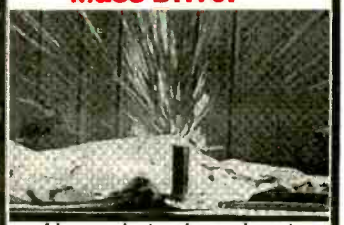

Above photo shows burst impact of Mass Driver

Can Crusher

A can is crushed into the shape of an hour glass demonstrating the awesome power of magnetics. Very popular demo in science museums as users get to crush and keep their own can. *Kids love this!!*

Wire Exploding

Generate pyrotechnical explosive blasts for many applications. Create a new artistic concept. Uses our unique high energy pulser shielded explosion chamber.

HEP9 High Energy Pulser...$20.00
Plans pack Includes above *MASS1* Mass driver, *CANCRU1* Can crusher and *WIREXPLOD1* Wire exploder/Blast art plans. We stock all parts, kits and completed units for the above items.

Above HEP9 pulser is used for :
EMP / HERF *Generation, Build a Rail or Coil Gun, Electrothermal Gun, High Power Pulsed Laser , Mass Warping etc etc*

Information Unlimited PO Box 716 Amherst N.H. U.S.A. 03031 E-mail <info1@xtdl.com>
1 800 221 1705 Orders/Catalogs Only! Fax 1 603 672 5406 Information 1 603 673 4730 *Free Catalog on Request*
Pay by MC, VISA, Cash, Check, MO. Add $5.00 S&H . Overseas Contact for Proforma

CIRCLE 220 ON FREE INFORMATION CARD

Miniature Transmitters and Receivers

2 Button / 3 Channel Transmitter

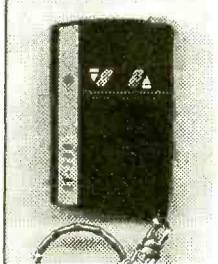

RF300T

1....$22.95
5.....$19.95 ea
10...$16.95 ea

RF300XT

1....$25.95
5.....$22.95 ea
10...$19.95 ea

- 300' (XT), 150' (T) Range
- Frequency: 318 MHz
- 59,049 Settable Security Codes
- 12 Volt Battery and Keychain Included
- Current Draw: 4.8 ma
- Fully Assembled in Case
- Dimensions: 1.25" x 2.0" x .5"
- Push both buttons for the 3rd Channel
- Slide Button Cover Included

4 Button / 15 Channel Transmitter

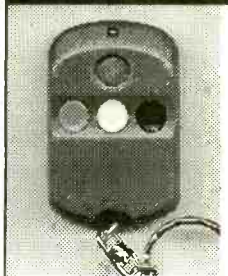

RF304XT

1....$27.95
5.....$24.95 ea
10...$21.95 ea

- 250' Range
- Frequency: 318 MHz
- 6,561 Settable Security Codes
- 12 Volt Battery and Keychain Included
- Current Draw: 4.6 ma
- Fully Assembled in Case
- Dimensions: 1.35" x 2.25" x .5"
- Push combination of buttons to achieve up to 15 channels

2-4 Data / 3-15 Channel Receivers

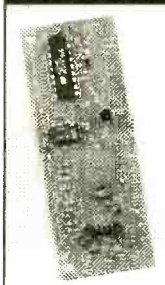

RF300RL
RF300RM

1....$27.95
5.....$24.95 ea
10...$22.95 ea

RF304RL
RF304RM

1....$29.95
5.....$26.95 ea
10...$23.95 ea

- Compatible with 300/4 Transmitters
- 11-24 volts DC Operating Voltage
- 13 ma. Current Draw
- Latching (L) or Momentary (M) Output
- Kits Available (subtract $5.00 ea.)
- Dimensions: 1.25" x 3.75" x .5"
- 2 (300) / 4 (304) Output Data Lines
- Binary to Dec / Hex Converter can achieve up to 15 channels

- Alarm Systems
- Garage / Gate Openers
- Lighting Control
- Magic Props
- Medical Alert
- Monitoring Systems
- Industrial Controls
- Surveillance Control
- Motor Control
- Schematics Available
- Receiver Board Layout Available
- Custom Design Consulting Available

Visitect Inc. (510) 651-1425 Fax: (510) 651-8454 Email: Support@Visitect.Com
P.O. Box 14156, Fremont, CA 94539 Visa / Mastercard, COD

CIRCLE 224 ON FREE INFORMATION CARD

www.americanradiohistory.com

RAMSEY

GET THE NEW CATALOG TODAY!

New Kits, New LPFM, New Cameras

NEW! *www.ramseykits.com*

35 WATT LPFM STEREO TRANSMITTER

- ✓ 35W RF output, VSWR protected
- ✓ Automatic audio & power controls
- ✓ Digital synthesized PLL
- ✓ Full front panel control
- ✓ 110/220VAC, 12VDC operation

NEW!

Whether your application is export or LPFM, the PX1 has you covered. From the over-rated continuous duty power supply & power amplifier to the 2 line vacuum fluorescent display, your station will be the easiest to setup and the most reliable for continuous operation. Full microprocessor controls provide a "virtual engineer". Check out www.highpowerfm for full details.

PX1	35W Professional FM Stereo Transmitter	$1,795.95

ELECTROCARDIOGRAM HEART MONITOR

- ✓ Visible and audible display of your heart rhythm
- ✓ Re-usable sensors included; just like visiting the hospital!
- ✓ Bright LED "beat" indicator
- ✓ Monitor output for oscilloscope display

NEW!

Enjoy learning about the inner workings of the heart while covering the stage by stage electronic circuit theory of ECG/EKG systems. Be heart smart and learn at the same time!

ECG1	Electrocardiogram Heart Monitor Kit	$34.95
CECG	Matching Case & Knob Set	$14.95
AC125	110 VAC Power Adapter	$9.95
ECGP10	Replacement Reusable Probe Patches (10-Pack)	$7.95

PLASMA GENERATOR

- ✓ Generate 2" sparks to a hand held screwdriver!
- ✓ Build your own plasma balls!
- ✓ 25KV at 20 KHz from a solid state source!

NEW!

Generate really impressive sparks, build your own plasma ball, light fluorescent tubes without wires! From a solid state source, generate over 25KV at 20KHz for the most dazzling displays!

PG13	Plasma Generator Kit	$59.95
PS12	14VAC Output Power Supply	$19.95

ION GENERATOR

- ✓ Generates negative ions with a blast of fresh air!
- ✓ 7.5KV DC negative, 400uA - that's a lot of ions!
- ✓ Steady state DC voltage, constant current, not pulsed!

NEW!

Learn the basics of ion repulsion by building this ion generator! Creates a continuous blast of fresh air charged with a ton of ions. Perfect for pollution and air freshening; just smell those ions! Solid state wind generation; you'll be amazed!

IG7	Ion Generator Kit	$59.95
AC125	110 VAC Power Adapter	$9.95

TOUCH-TONE TONE GRABBER

- ✓ New-built-in RJ11 phone jack
- ✓ Large memory holds over 500 numbers
- ✓ Big bold 8 digit display, auto insertion of dashes
- ✓ New-output latch jack

NEW!

Dialed phone numbers on the radio, repeater codes, control codes, anywhere touch-tones are used, you can read and store them! All new design for 2002. Capture those tones with the TG2!

TG2	Tone Grabber Tone Reader Kit	$59.95
CTG2	Matching Case & Knob Set	$14.95
AC125	110 VAC Power Adapter	$9.95

RCA TO XLR AUDIO CONVERTER

- ✓ Connect consumer outputs to XLR inputs
- ✓ Left & right audio gain adjustments

NEW!

So you're trying to connect consumer audio outputs with RCA connectors (unbalanced) to XLR (balanced) inputs. Always a problem...Not anymore with the R2XL1!

R2XL1	Unbalanced to Balanced Audio Converter Kit	$49.95
CR2XL	Matching Case & Knob Set	$14.95
PWR25	12VAC Power Adapter	$9.95

AUTOMATIC COLOR/BW IR CAMERA

- ✓ Color during the day, IR B&W at night!
- ✓ Automatically turns on IR Illumination!
- ✓ Waterproof to IP57 standards!
- ✓ Black anodized housing with universal mount

NEW!

Best of both worlds! This video camera is a waterproof COLOR camera during the day. When the light level drops, it automatically changes to B&W and turns on its built-in IR illumination, with 10 IR LEDs. Powered by 12VDC and terminated with a professional BNC connector. B&W only model also available if color is not needed. Both in heavy anodized black housing.

CCD309	Color/B&W IR Waterproof Bullet Camera	$169.95
CCD308	B&W IR Waterproof Bullet Camera	$109.95
AC125	110 VAC Power Adapter	$9.95

MINI B&W CAMERA WITH IR ILLUMINATION

- ✓ Built in IR illumination!
- ✓ Sees in total darkness!
- ✓ Black aluminum housing with swivel bracket

NEW!

What a deal! This miniature B&W video camera has 6 high power IR LEDs built into it to provide illumination in total darkness! No need for external IR illuminators. Attractive black aluminum housing easily mounts at any angle with the built-in swivel bracket. Runs on 12VDC, and includes professional BNC output plug-in harness.

CCD303	Mini B&W IR Illuminated Camera	$59.95
AC125	110 VAC Power Adapter	$9.95

Check out all our other new cameras at www.ramseykits.com!

PROFESSIONAL FM STEREO RADIO STATION

- ✓ Synthesized 88 to 108 MHz with no drift !
- ✓ Built-in mixer – 2 line inputs and one microphone input!
- ✓ High power module available for export use
- ✓ Low pass filter for great audio response

Our FM100 is used all over the world by serious hobbyists as well as churches, drive-in theaters, and schools. Frequency synthesized PLL assures drift-free operation with simple front panel frequency selection. Built-in audio mixer features LED bargraph meters to make setting audio a breeze. The kit includes metal case, whip antenna and built-in 110 volt AC power supply.

FM100	Super-Pro FM Stereo Radio Station Kit	$249.95
FM100WT	1 Watt, Wired Export Version	$399.95

SYNTHESIZED FM STEREO TRANSMITTER

- ✓ All new design & features for 2002!
- ✓ Fully adjustable RF output

NEW!

Our #1 kit for years has just gotten better for 2002! Totally redesigned, the FM25B has all the features you've asked for. From variable RF output, F connector RF output jack, line input, loop output, and more. Includes case, power supply, whip antenna, audio cables.

FM25B	Synthesized FM Stereo Transmitter Kit	$129.95

AND...OUR FAMOUS *MINI-KITS*

These are easy to build kits that can be used either standalone or as building blocks for more complex projects.

TS4	Tickle-Stick Shocker	$9.95
BN9	Super Snoop Amplifier Kit	$8.95
BL1	LED Blinky Kit	$3.95
TD1	Tone Encoder/Decoder Kit	$6.95
TT7	Touch Tone Decoder Kit	$19.95
CPO3	Code Practice Oscillator Kit	$9.95
UT5	Universal Timer Kit	$8.95

RAMSEY ELECTRONICS, INC.

793 Canning Parkway
Victor, NY 14564
716-924-4560
sales@ramseykits.com

VISA

Order Today! 800-446-2295

www.ramseykits.com

CIRCLE 263 ON FREE INFORMATION CARD

www.americanradiohistory.com

STAMP VIDEO !!

LOW COST SINGLE CHIP VIDEO CONTROLLER

$25 EVAL (1)

OEM (1K)

$7.10

- Works with Stamp, z80, AVR, 8051, x86, PIC, etc.
- 8 col x 6 row alpha-numeric or 640 pixel graphic
- Includes high speed serial and parallel interfaces
- Drive CRT, TV, LCD with NTSC or VGA signal
- Source code examples in C, BASIC, Assembly

SINGLE CHIP COMPUTER $7

eval kit
oem (1k)
$1.99

-ZERO external components
-Built-in BASIC / Assembly
-RS232 program download
-1K flash,64ee,3irq,2timers
-15 I/O bits, A/D comparator
-20mips,faster than pic/8051
-20 pin DIP part #MV1200

NEW! 8K SUPER CHIP
40x the BASIC program space!
-32 i/o, 12 irq, 3 timers, Bus
-8K flash, 512ee, 512nvram
-Watchdog with internal osc.
-40 pin DIP part #MV8515
oem(1k) $7.10 eval(1) $25.00

CREDIT CARD COMPUTER 2

New PLUG-N-GO, no cables/power supply to buy!
Lo-power RISC cpu 10x faster than PIC, Z80, 8051
4meg NV mem,ser,par,RTC,4ch 12bit ADC,ISA bus
Built-in BASIC, Assembly, C compiler included
Friendly instruction set, unlike PIC or 8051
CCC2 eval(1)$75/oem(1k)$21 CCC1 $50/$14

LO COST MINI-PC

Includes DOS,NV mem,ADC,RAM,clock,ISA bus
Ports for serial, parallel, LCD, keyboard
Program in Turbo C, BASIC, MASM, etc.
Complete, no costly development kits required
Lowest power lowest cost PC compatible available
XT: oem $27 eval $95 AT: oem $55 eval $195

SERIAL MINI-TERMINAL

RS232 terminal for Stamp, PC, Z80, AVR etc.
-super low-current, powers from serial line
-LED backlit LCD, visible in all conditions
-115.2kbps, DB9 conn, simple commands
-specify 20 customizable or 16 tactile keys
eval(1) $75,oem(1k) $21.30,w/BASIC cpu $27

640x480 VGA LCD $27

Controller for most single/dual scan LCDs
Works with lo-res (160x120, 320x240,etc.)
Use with PC or SBC, standard VGA BIOS
Source code demo shows VGA initialization
Adaptable for other CPUs (i.e. Z80, HC11)
oem(1k) $27 evalkit(1) $95 w/10"LCD $195

STAMP DRIVE

Read / Write PC compatible hard disk, PCMCIA, & Compact Flash on stamp, 8051, pic, avr, z80, x86
-up to 4 gigabyte capacity
-low power, simple commands
-RS232 @ 9600, 115.2k, 667k
-$95eval $27oem, IDE version$14

LIMITED TIME OFFER!
- FREE SERIAL EE
- FREE PLCC ADAPT.
- FREE ZIF SOCKET

$95 PRINTER PORT PROGRAMMER

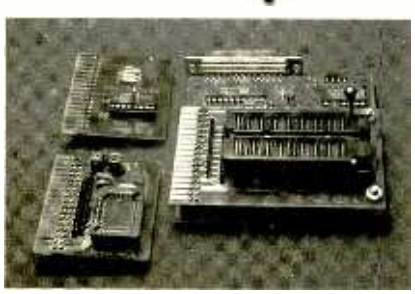

LOWEST COST, FASTEST, EASIEST TO USE!

Does FLASH, EE, NVRAM, EPROM to 8m, (27080). Adapters for micros.
Super small size! Perfect for notebooks or drive bay of desktop computer.
WINDOWS and DOS software with script file ability to simplify operation.
Higher yield and quicker programming than others. "Gang Bang" option.

WWW.STAR.NET/PEOPLE/~MVS

MVS Box 803
Nash.,NH 03060
(508) 792 9507

.MVS

5yr Limited Warranty
Free Shipping
Mon-Fri 10-6 EST

SERVING THE EMBEDDED COMMUNITY SINCE 1979!

CIRCLE 296 ON FREE INFORMATION CARD

www.americanradiohistory.com

Home Automation

World's Largest Source for Home Automation!

- Voice Control
- Gadgets & Motorized Devices
- Home Theater
- Phones & Intercoms
- X10 & Lighting Control
- Home Security & Surveillance
- Home Networking & Structured Wiring

and Much More...

800-SMART-HOME
www.smarthome.com
Free 144 pg. Color Catalog!
Dealers/Resellers ask about our SmartHome PRO Dealer Program 800-949-6255

RF Modules

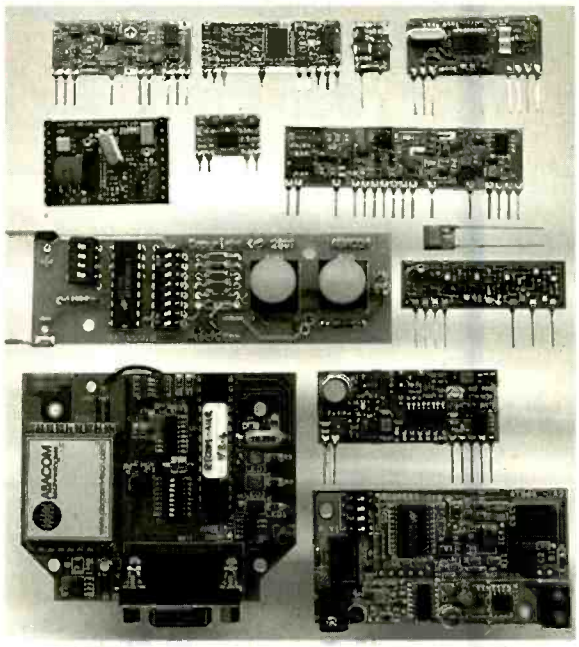

www.abacom-tech.com

ABACOM Technologies

Tel: +1(416)236 3858
Fax: +1(416)236 8866
abacom@abacom-tech.com

ELECTRONIC MILITARY SURPLUS

FAIR RADIO SALES

WEBSITE: fairradio.com
E-MAIL: fairradio@fairradio.com
PHONE: 419-227-6573
FAX: 419-227-1313
2395 St Johns RD - Box 1105
Lima, OH 45802
VISA, MASTERCARD, DISCOVER
Address Dept. ES

2KW SOLA REGULATOR

Sola CVS 2000 Watt Constant Voltage Transformer provides a very well regulated sinusoidal waveform that is isolated from variations and disturbances in the input voltage. Also provides isolation and step-up/step-down to allow for various input/output voltages. Input 95-130/175-235/190-260/380-520 60Hz. Output 120/240VAC 60Hz 2000VA. 17.8x11.4x9.6, 115 lbs sh. plus shipping. Unused, $250.00 ea. 2 / $450.00

We've Moved !!
Come see us on the way to the Dayton Hamfest.
Just off I-75 at Exit 122

Send for Our New Catalog !!

Radios - Test Equipment - Tubes - Antennas

BUY BONDS

Help protect our nation's soil and water.
Call for your free action packet.

1-800-THE-SOIL
WE OWE IT TO OUR CHILDREN

United States Department of Agriculture
Soil Conservation Service

PICmicro® PIC16F87x Series and ICD Book

Easy Debug'n

NEW

- Features of PIC16F87x microcontrollers
- In-circuit debugging using Microchip ICD
- Companion for our PIC'n book series
- 8.5x11 format. 72 pages. $12.95

Table of Contents and Ordering Information On Web Site:

+ $5 s/h in US. VISA, MC, AM, DS, MO, Check
CA residents please add 7.25% CA sales tax

PICmicro and MPLAB are trademarks of Microchip Technology Inc.

SQUARE 1 ELECTRONICS

P.O. Box 501, Kelseyville, CA 95451
Voice (707) 279-8881 Fax (707) 279-8883

We have been selling on the Internet since 1996. We will ship the day we receive your order or the next business day.

PICmicro® BOOKS

Easy PIC'n - Beginner $29.95
- Programming Techniques
  Instruction set, addressing modes, bit manipulation, subroutines, loops, lookup tables, interrupts
- Using a text editor, using an assembler, using MPLAB
- Timing and counting (timer 0), interfacing, I/O conversion

PIC'n Up The Pace - Intermediate $34.95
- Serial communication - PICmicro to peripheral chips
- Serial EEPROMS
- LCD interface and scanning keypads
- D/A and A/D conversion - several methods
- Math routines

PIC'n Techniques - Intermediate $34.95
- 8-pin PICmicros
- Timer 1, timer 2 and the capture/compare/PWM (CCP) module
- Talking to a PICmicro with a PC using a terminal program
- Test equipment and data logger experiments

Serial PIC'n - Advanced $49.95
- Synchronous - bit-bang, on-chip UART, RS-232
- Asynchronous - I2C (Philips Semiconductor)
  SPI (Motorola), Microwire (National Semiconductor)
- Dallas Semiconductor 1-Wire bus

http://www.sq-1.com

www.americanradiohistory.com

www.web-tronics.com www.web-tronics.com www.web-tronics.com

High Tech Video System with Audio

Only $119.00!! only $109. ea. in qty 4

Complete Package ! Includes Two B/W Cameras with I.R. (night vision) & microphones
One 5.5" B/W Monitor with Built in Switcher, Two pre-wired 60 ft hook-up cables
Everything you need to be up & running in minutes with a high tech video system!!

System Features:
- *2 wide angle B/W cameras w I.R. & Sound
- *5.5" B/W video monitor w built in switcher
- *Two 60 ft. pre-wired cables
- *View one or both cameras. Switching Time variable from 2 to 20 seconds
- *Video easily hooks into a VCR

Removeable H.D. Racks

For IDE/Ultra DMA Hard Drives

We Sold Over 18,000 in 2000!

ONLY $14.95 any qty.

This product can be used with any 3-1/2 IDE hard drive up to 1" high. It includes an electronic keylock for safe removal and insertion. Made of ABS 707 fireproof plastic. Use this product to protect sensitive hard drive data, take your hard drive between work and home or even set up different users with their own hard drives that they physically insert every time they use a PC. Other models available from C.S.I. include RH10 series and RH20 series, which are interchangeable within the same interface design (IDE or SCSI). *Other Models are Available. See www.web-tronics.com under "hard drive and accessories" for more details and pricing.*

#RH-10C-IDE

Triple Output Bench Power Supply

w four 3/12 digit LCD Displays
Output: 0-30 VDC @ 2 Amps x 2
& 5V fixed @ 3 Amps x1
Input: 110VAC +/- 10%

CSI3002D-3....$159.00
(qty. 5+.....$149.00)

Details at www.web-tronics.com under "Test Equipment"

2GHz RF Field Strength Analyzer

ONLY $1699

- Frequency Range: 100KHz to 2.060MHz
- Narrow Band FM (NFM), Wide Band FM (WFM), AM and Single Side Band (SSB) Modulated Signals May Be Measured
- PLL Tuning System for Precise Frequency Measurement and Tuning
- LED Backlight LCD (192x192 dots)
- Built-In Frequency Counter
- Hand-Held and Battery Operated
- All Functions are Menu Selected
- RS232C for PC Interface and Printer

#3201

CTRL - D to bookmark this site

www.web-tronics.com

Don't forget the dash

- Easy to Navigate
- Includes a Search Engine That Really Works
- New Items Added Constantly

Circuit Specialists Inc.

In Business Since 1971

CCD B&W Board Cameras

Detailed Specs on the Web

LOWER PRICES

- *ASIC CCD Area Image Sensor*
- *Extremely Low Power Consumption*
- *0.5 Lux Min Illumination*
- *Built-In Electronic Auto Iris for Auto Light Compensation*

VM1030PA-B 30mmx30mmx25mm, Pinhole lens, 12V $39.00 any qty.

VM1030A 30mmx30mmx26mm, Standard lens, 12V $39.00 any qty.

VM1035A 42mmx42mmx25mm, Standard lens, 12V with back light compensation $49.00 any qty.

VMCB21 44mmx38.5mmx28mm, with 6 infra-red LEDs, 12V $49.00 any qty.

VM1036A 32mmx32mmx25mm, Standard lens, 12V, reverse mirror image feature $49.00 any qty.

Mini CCDs (B/W & Color)

Sensational NEW Design for Small Observation Cameras. *Smaller and Better!*

LOWER PRICES

- *Ultra Miniature Design*
- *Black & White Versions Only 25mm x 25mm*
- *Color Versions Only 32mm x 32mm*
- *Available in Standard Lens or Pinhole Lens*
- *All Include Pre-Wired Cable Harness for Video & Power*
- *12V Regulated Power Supply Required (120mA typical power consumption)*
- *0.1 LUX Rating (B/W), 1 LUX (color)*
- *CCD Area Image Sensor for Long Camera Life*
- *Back Light Compensation Circuit*
- *Built-In Electronic Auto Iris Lens*

Detailed Specs on the Web

VMCW-H11A 32mmx32mmx30mm, Color CCD with standard lens, pre-wired cabling 12V DC Power $109.00/ $99.00 5 or more

VMCW-H12A 32mmx32mmx19mm, Color CCD with pinhole lens, pre-wired cabling, 12V DC Power Input $109.00/ $99.00 5 or more

VMPS-718A 25mmx25mmx30mm, B/W CCD with standard lens, pre-wired cabling, 12V DC Power Input $49.00/ $45.00 5 or more

VMPS-250A 25mmx25mmx15mm, B/W CCD with pinhole lens, pre-wired cabling, 12V DC Power Input $49.00 / $45.00 5 or more

Bullet CCD Cameras B&W and Color

Detailed Specs on the Web

LOWER PRICES

- *Smart Rugged Metal Housing*
- *Extremely Low Power Consumption*
- *12 Volt*
- *CCD Area Image Sensor for Long Camera Life*
- *Built-In Electronic Auto Iris for Auto Light Compensation*
- *No Blooming, No Burning*
- *0.1 Min Lux Illumination (B&W), 1 Lux Min Lux Illumination (color)*

VMBLT1020 B&W, 21mm(D)x58.5mm(L) $49.00 any qty.

VMBLT1020W B&W Weatherproof, 21mm(D)x58.5mm(L) $69.00 any qty.

VMBLTJC19BW COLOR Weatherproof, 17mm(D) x88mm(L) $109.00 any qty.

COLOR CCD Mini Board Cameras

PRICE REDUCTION

Detailed Specs on the Web

- *Low Power Consumption*
- *1 Lux Illumination*
- *Internal Synchronization*
- *12Volts*
- *400 TV Lines*
- *Built-In Electronic Auto Iris for Auto Light Compensation*

VM3010PA 33mmx33mmx18mm, Pinhole lens $99.00 any qty.

VM3010-A 33mmx33mmx32mm, Standard lens $99.00 any qty.

Bench Digital Multimeter w RS232C Interface

new!

True RMS/AC voltage & current
Digital & Analog Display
3999 Counts & 42 Segment Bar graph
Autorange & Manual Range
Data Hold, Min/Max Relative Measurement
Storage Data Display/Recall
Back Light
ADP Measurement 400mV+/-3%10 Digit/1mV DC
Continuity Test
Diode Test
RS232C standard interface
AC or DC power

Only $99.00! any qty.

Extensive Details @ WEB SITE
Item# CS19803R

new! O'Scope Offer ONLY $299

30MHz! ONLY $299!
Industries Best Price!
See web for specs

- *Dual Channel*
- *Dual Trace*
- *Vert Trigger*
- *1 Year C.S.I. Warranty!*

#OSC-1030

Manufactured for CSI by a leading O.E.M. manufacturer. See our website for detailed specifications!

new! DC to AC Power Inverters !

150 watt up to 3000 watt models !

150w modified sine wave: $29.95 (G-12-015B)
300w modified sine wave: $39.95 (G-12-030)
150w pure sine wave: $69.00 (G-12-150S)
300w pure sine wave: $109.00 (G-12-300S)
800w modified sine wave: $139.00 (G-12-800
1000w modified sine wave: $179.00 (G-12-100
3000w modified sine wave(phase corrected).
(G-12-300).....$489.00

Industry Best Pricing!

See Our Website for DETAILED Specs.!

3000 Series Digital R/O Bench Power Supply

*Low Cost Single Output *3Amp New Lower Prices!*

AS LOW AS $85

High stability digital read-out bench power supply featuring constant voltage and current outputs. Short-circuit protection and current limiting protection is provided. Highly accurate LED accuracy and stable line regulation make the 3000 series the perfect choice for lab and educational use.

Line Regulation: 2x10⁻⁴ +1ma
Load Regulation: 1 x 10-4 +5mv
LED Accuracy: Voltage ±1% +2 digits
Current ±1.5% +2 digits
Wave Line Noise: ≤1mvrms
Dimensions: 291mm x 158mm x 136mm

CSI3003: 0-30v/0-3amp Digital R/O Bench PS, 1x10⁻⁴+5mv Load Regulation
$89.00 5/$85.00

CSI 5003: 0-50v/0-3 amp Digital R/O Bench PS, 1x10-4 +5mv Load Regulation
$109.00 5/$99.00

See our web-site for many other power supply deals

Our Most Sophisticated DMM

We Sold Over 700 Last Year!

NOW ONLY $149 Reg. $169

with RS-232 Interface & Software, 3-3/4 Digit, 4000 Count, Auto-Ranging with Analog Bargraph

- True RMS Mode
- 10MHz Frequency Counter
- Time Mode with Alarm, Clock, and Stop Watch
- Dual Display
- 10 Location Memory
- Min, Max, Avg and Relative Mode
- Decibel Measurement
- Cap and Ind. Measurement
- Temperature Mode (C/F)
- K Type Temperature Probe Included
- Pulse Signal for Logic & Audible Test
- Continuity/Diode Test
- Logic Test
- Auto Power OFF/"Keep ON" Mode
- Fused 20A Input with Warning Beeper
- Back Light
- Data Hold/Run Mode
- Safety Design UL1244 & VDE-0411
- Protective Holster
- Silicon Test Leads

More Details on our Web Site

PROTEK 506

CIRCUIT SPECIALISTS, INC. 220 S. Country Club Dr., Mesa, AZ 85210 800-528-1417/480-464-2485/FAX: 480-464-5824

CIRCLE 233 ON FREE INFORMATION CARD

www.americanradiohistory.com

FCC Course with Certificate

A Powerful 19 Lesson Self-Study Program on one CD!

FCC Exam Review Course

After completing this course you will be ready to take the FCC examination for a General Radiotelephone Operator License.

The General Radiotelephone Operator License is required to adjust, maintain or repair any FCC licensed radiotelephone transmitters in the aviation, maritime and international fixed public radio services. It is issued for the lifetime of the holder.

Through the years Cleveland Institute of Electronics (CIE) has been able to compile a great amount of information concerning the types of questions that the FCC include in their examinations.

Because of the extensive FCC sample questions in this course, you can look forward with confidence to passing the FCC exam particularly if you heed the hints given throughout the course.

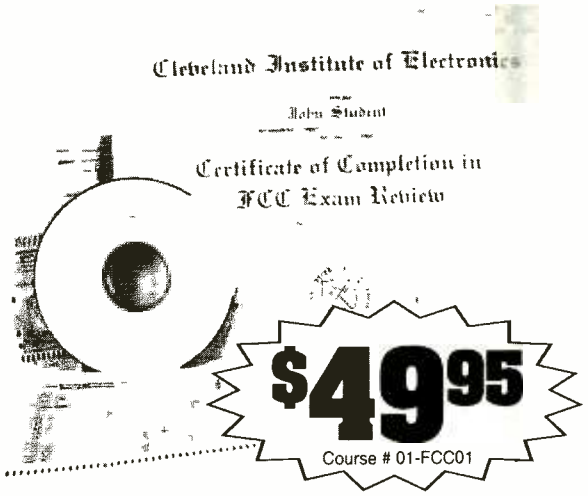

Here's what you'll get!

19 FCC Lessons on CD ROM

Every lesson is presented in a clear and easy-to-understand format which makes learning this material fun and easy. After each lesson you'll take an exam. You can take it on-line or fill out one of the answer sheets we provide and mail it. After you finish the 19 lessons we'll send you a Certificate of Completion from CIE.

CIE Instructor Assistance:

Use our toll-free hot line to access our faculty and staff if you ever need assistance with your course work.

Priority Grading:

Your exams will be graded and sent back to you within 24 hrs.

Certificate of Completion:

Earn a Certificate of Completion that's suitable for framing.

Why is an FCC License so valuable?

An FCC license is an excellent credential for career advancement because it's proof of a certain level of electronics know-how. Because it is a federal examination, the FCC license with its implied knowledge is accepted by industry nationwide.

Lesson Topics Include:

- Modern Modulation Methods
- Receiving Equipment
- Batteries, Control Motors & other Power Sources
- Digital & Data Commun.
- Frequency Modulation
- Transmission Lines & Wave Guides
- Transmitters
- Antennas & Wave Propagation
- Monochrome & Color TV
- Microwave Comm. Systems
- Tuned-Staged Operation
- Suppressed - Carrier Modulation and Single
- Detection & Frequency Conversion
- Lasers in Communications & Industry
- Communications by Fiber Optics
- FCC Review Lessons Pt 1
- FCC Review Lessons Pt 2
- Pointers & Practices for Passing FCC G.C. Exam Pt 1
- Pointers & Practices for Passing FCC G.C. Exam Pt 2

Learn PC Repair

- PC Diagnostic Video
- 200 + Page Training Manual
- PC Assembly & Configuration Video
- Micro-Scope Diagnostic Software (LE)
- CD-ROM - contains videos and manual

02-020 ..... **$99.95**

Motor Controls 101

This CD ROM trainer uses pictures, sounds, animations & interactive circuits to teach you the basics of motor control. A Certificate of Completion may be printed on your printer if you achieve a passing score on the included test.

02-050 (not a CIE certificate) **$99.95**

More CIE Certificate Courses

AC/DC Electronics Course with Lab
03-introb (39 graded lessons w/ cert) .. **$225**

Intro to Web Site Design
01-M410 (10 graded lessons w/ cert) .. **$245**

Sodlering Course with Lab
01-SD01 (3 graded lessons w/ cert) **$95**

Programmable Controller Course
01-SD01 (1 graded lesson w/ cert) **$65**

Digital Data Communications with Lab
01-DD01 (11 graded lessons w/ cert) .. **$245**

CIE Bookstore: 1776 E. 17th, Cleveland, OH 44114 • **800 321-2155** • **www.ciebookstore.com**

Shipping & Handling: $0 - $30 **$2.75**, $30.01 - $50.00 **$5.25**, $50.01 - $100.00 **$11.75**, $100+ **$15.75** CA, HI & OH residents must add sales tax.

CIRCLE 320 ON FREE INFORMATION CARD

www.americanradiohistory.com

New and Pre-Owned Test Equipment

New Equipment Specials

B+K Precision 2120B – 30 MHz Oscilloscope

* FREE Model 117B Multimeter
* 2 Channel, Dual-Trace
* 30 MHz Bandwidth
* TV Triggering
* (2) Probes Included

Sale Price $339.00

AVCOM PSA-37D – Spectrum Analyzer

Satellite Downlink – Installation – Maintenance & Service

- Band 1: 10 – 1750 MHz
- Band 2: 3.7 – 4.2 GHz
- Carrying Case Included
- Line or Battery Powered
- Built-in DC Block & Power for LNA/LNB's

Sale Price $2,395.00

Instek GOS-6103 – 100 MHz Analog Oscilloscope

- 100 MHz Bandwidth
- 2 Channel, High Sensitivity
- TV Trigger - Signal Output
- Cursor Readout
- Time Base Auto-range
- (2) Probes Included
- 2 Year Warranty

Sale Price $899.00

Leader LF 941 – CATV Signal Level Meter

- TV/CATV Coverage from 46-870 MHz
- Video/Audio Carrier Measurements

Sale Price $489.00

Wavetek Meterman HD160B Digital Multimeter

- Full Sealing Against Water, Chemicals, & Fluids
- True RMS
- Drop-Proof to 10 feet (3.3m)

Sale Price $159.00

Pre-Owned Oscilloscope Specials

Tektronix	465	100 MHz	$499.00
Tektronix	465B	100 MHz	$649.00
Tektronix	475	200 MHz	$749.00
Tektronix	475A	250 MHz	$949.00

- Professionally Refurbished
- Aligned & Calibrated to Original Specifications
- The Industry Standard of Oscilloscopes
- *1 Year Warranty* - The Longest Available!!!
- See Website for Complete Specifications

See us on the Web!
www.testequipmentdepot.com

We Buy Surplus Test Equipment

Test Equipment Depot
A FOTRONIC CORPORATION COMPANY
99 Washington St. Melrose, MA 02176
(781) 665-1400 • FAX (781) 665-0780
e-mail: sales@testequipmentdepot.com

VISA MasterCard AMEX C.O.D.

(1-800-996-3837)
TOLL FREE 1-800-99-METER

CIRCLE 322 ON FREE INFORMATION CARD

MECI
Your Electronics Value Company
340 East First Street
Dayton, Ohio 45402

Tons of Electronics

Get your FREE catalog today and discover some of the best deals in electronics. We have thousands of items ranging from unique hard-to-find parts to standard production components. Call, write or fax today to start your subscription to one of the most unique catalogs in the industry, filled with super values on surplus electronic and hobbyist type items.

Checkout our 10,000 item on-line catalog http://www.meci.com

Order Toll Free 1-800-344-4465
Why pay more? Call today!
Fax Order Line 1-800-344-6324

CIRCLE 323 ON FREE INFORMATION CARD

Electrifying!

- **50,000 Count with 0.05% Accuracy**
- **True RMS**
- **RS-232 Interface with Dual Display**
- **The Protek 608 DMM**

Model 608

Featuring...

- 17 Segment Bargraph Display
- Software Programmable
- Peak Hold
- Capacitance Range
- Duty Cycle
- Pulse Width
- Low Power Ω Measurements
- Conductance Mode
- Backlit LCD
- Frequency Counter
- Temperatures Measurements
- Diode Test

All This for $249.00
NOW $189.00 !!!

LIMITED TIME OFFER, ORDER NOW!

Your Wireless Test Source
TSi

Test Supply, Inc., 9649 Glendower Ct., Laurel, MD 20723 **301-317-4718**

www.americanradiohistory.com

$62 PCBs

And our layout software is **FREE!**

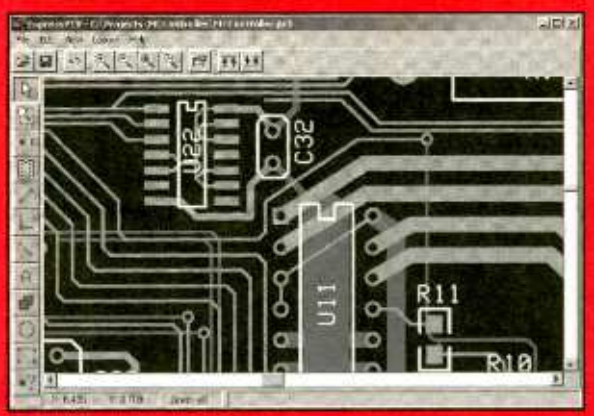

Download our FREE layout software
Design your two-sided plated-through PCB
Send us your design with just a click
Receive your boards in a few business days

Select our MiniBoard service and get three top quality 2.5" x 3.8" PCBs for $62 – shipping included!

VISA expresspcb.com MasterCard

BREAST CANCER BEGINS EVEN SMALLER THAN THIS. THAT'S WHY YOU NEED A YEARLY MAMMOGRAM, ESPECIALLY AS YOU GET OLDER. MAMMOGRAMS CAN DETECT LUMPS TOO SMALL FOR YOU TO FEEL AND EARLY DETECTION MAY SAVE YOUR LIFE, SO CALL 1-800-ACS-2345.

GET A MAMMOGRAM. EARLY DETECTION IS THE BEST PROTECTION.

The Pocket Programmer

The Best just got Better!!!

The Best portable programmer that uses the printer port instead of an internal card just got Better!! Now with easier to use Windows based software that programs E(E)prom, Flash & Dallas parts. 25/27/28 & 29 series from 16K to 8Mbit. Adapters available for MCU's 874X, 875X, Pic, Atmel, PLCC packages, Bi-Prom's, 40-Pin X16 Eproms, Rom Emulator to 32K X 8 (2716-27256) and More...

Only $149.95

Same Name, Address & Phone # for 19 Years.... Isn't it Amazing ?

Intronics, Inc.
Box 13723 / 612 Newton St.
Edwardsville, KS 66113
Tel. (913) 422-2094 Add $7.00 COD
Fax (913) 441-1623 Add $6.00 Shipping

WWW.IN-KS.COM Visa/MC/Amex/Disc

The Standard for checking Capacitors in-circuit

Good enough to be the choice of Panasonic, Pioneer, NBC, ABC, Ford, JVC, NASA and thousands of independent service technicians.

Inexpensive enough to pay for itself in just one day's repairs. At $179, it's affordable.

And with a 60 day trial period, satisfaction guaranteed or money-back policy, the only thing you can lose is all the time you're currently spending on trying to repair all those dogs you've given up on.

Locate shorted or leaky components or conditions to the exact spot *in-circuit*

Still cutting up the pcb, and unsoldering every part trying to guess at where the short is?

$179

Your DVM shows the same shorted reading all along the pcb trace. LeakSeeker 82B has the resolution to find the defective component. Touch pads along the trace, and LeakSeeker beeps highest in pitch at the defect's pad. Now you can locate a shorted part only a quarter of an inch away from a good part. Short can be from 0 to 150 ohms

CapAnalyzer 88A *LeakSeeker 82B*

Available at your distributor, or call **561-487-6103**

Electronic Design Specialists www.eds-inc.com

www.americanradiohistory.com

ALL ELECTRONICS CORPORATION

SHOP OUR ONLINE STORE
www.allelectronics.com

Incredible Price! Piercing Piezo Mini-Siren

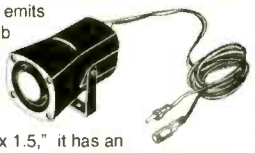

This piezo siren emits a piercing 100 db warble tone that is uncomfortable for anyone nearby. Only 2.3" long x 1.7" x 1.5," it has an adjustable metal mounting bracket and comes with 6' of wire. Operates on 9-12 Vdc. Includes a clip for operation with a 9V battery. Ideal for auto or home alarms. Large quantity available. **CAT # ES-12**

$3.00 each | 10 for $2.50 each, 100 for $1.50 each

All-Weather Flexible Thin Film 6 Volt Charger

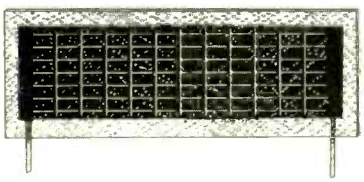

Flexible thin film solar module designed to charge 6 Volt nickel cadmium, nickel metal hydride or gel cell packs. Module encapsulated in Tefzel®/EVA for weatherproofing. Flat copper leads extend outside of encapsulation to facilitate connection. Can be mounted on curved surfaces. 7.2 Volts @ 100 mA. 11.31" x 3.87".
CAT # SPL-675 **$29.95 each**

Flashing LED

SPECIAL - RED T-1 3/4 water clear
CAT# LED-84

3 for $1.00 each | 100 for 25¢ each, 1000 for 18¢ each

ORDER TOLL FREE
1-800-826-5432
CHARGE ORDERS to Visa, Mastercard, American Express or Discover

TERMS: *NO MINIMUM ORDER.* Shipping and handling for the 48 continental U.S.A. $6.00 per order. All others including AK, HI, PR or Canada must pay full shipping. All orders delivered in CALIFORNIA must include local state sales tax. Quantities Limited. NO COD. Prices subject to change without notice.

CALL, WRITE FAX or E-MAIL for our *FREE* 96 Page CATALOG Outside the U.S.A. send $3.00 postage.

MAIL ORDERS TO:
ALL ELECTRONICS CORPORATION
P.O. Box 567
Van Nuys, CA 91408
FAX (818)781-2653
e-mail allcorp@allcorp.com

VISION ELECTRONICS

- 1 Year Warranty
- Money Back Guarantee
- No Rolls/Jitters/Flickers/Fading

Buy 1 Unit, Get the 2nd for 1/2 Price

COPY RENTAL TAPES WITH OUR VIDEO STABILIZERS

1-800-562-2252
2609 S. 156th Circle • Omaha, NE 68130
http://www.modernelectronics.com

9 out of 10 mice prefer the Consumer Information Catalog online. Catch it at **www.pueblo.gsa.gov.**

U.S. General Services Administration

ELECTRONIC GAMES

BP69—A number of interesting electronic game projects using IC's are presented. Includes 19 different projects ranging from a simple coin flipper, to a competitive reaction game, to electronic roulette, a combination lock game, a game timer and more. To order BP69 send **$4.99 clearance (includes s&h)** in the US and Canada to **Electronic Technology Today Inc., P.O. Box 240, Massapequa Park, NY 11762-0240.** US funds only. Use US bank check or International Money Order. Allow 6-8 weeks for delivery. MA07

FOR 26 EASY WAYS to HELP SAVE the EARTH CALL 1-800-488-8887.

One tree can make 3,000,000 matches.

One match can burn 3,000,000 trees.

ACTIVE ELECTRONIC COMPONENTS DEPOT

www.activestores.com

YOUR LOCAL ONE STOP SHOP FOR ALL YOUR ELECTRONIC NEEDS!

We Offer Over 5,000 Products on Display and 150,000 More in Stock, Including:

- Electronic Components
- Test & Measure Equipment
- Chemicals
- Wire & Cable
- Soldering Supplies
- Hand Tools
- Books & Kits
- Datacom
- Prototyping
- Static Control

and much more!

8 Easy-to-Shop Locations Across the U.S.!

BALTIMORE MARYLAND
CAMBRIDGE MASSACHUSETTS
CHERRY HILL NEW JERSEY
CHICAGO ILLINOIS
DETROIT MICHIGAN
LONG ISLAND NEW YORK
SEATTLE WASHINGTON
WOBURN MASSACHUSETTS

Visit www.activestores.com for details on the store nearest you.

AND 10 Locations in all major Canadian cities!

Join our Activeplus **Rewards Program** today!

It's the free and easy way to earn points on every in-store purchase and **save big!***

*See us in store or online for more details

www.americanradiohistory.com

Call Today And SAVE! Unbeatable PRICES!

CABLE TV

DESCRAMBLERS
CONVERTERS • FILTERS
VIDEO STABILIZERS

FREE FREE FREE
➤ 30 Day Trial
➤ Product Catalog
➤ 1 Year Warranty

100% MONEY BACK GUARANTEE

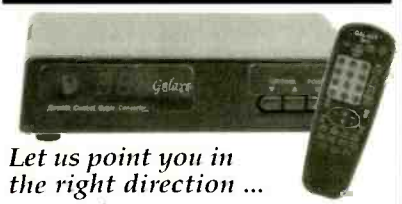

Let us point you in the right direction ...

Arrow Technologies
Omaha, Nebraska

TOLL FREE
1-800-554-ARROW
1-800-554-2776
http://www.arrowtek.com

Lynxmotion, When you're tired of playing with toys!

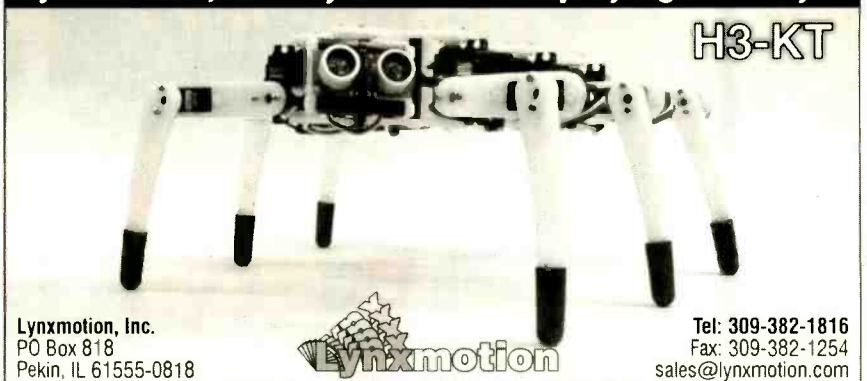

Lynxmotion, Inc.
PO Box 818
Pekin, IL 61555-0818
www.lynxmotion.com

Lynxmotion

Visit our website or ask for our free catalog!

Tel: 309-382-1816
Fax: 309-382-1254
sales@lynxmotion.com
tech@lynxmotion.com

EZ-EP DEVICE PROGRAMMER - $169.95

Check Web!! -- www.m2l.com

Fast - Programs 27C010 in 23 seconds

Portable - Connects to PC Parallel Port

Versatile - Programs 2716-080 plus EE and Flash (28F,29C) to 32 pins

Inexpensive - Best for less than $200

- Correct implementation of manufacturer algorithms for fast, reliable programming.
- Easy to use menu based software has binary editor, read, verify, copy, etc. Free updates via bbs or web page.
- Full over current detection on all device power supplies protects against bad chips and reverse insertion.
- Broad support for additional devices using adapters listed below.

Available Adapters

EP-PIC (16C5x,61,62x,71,84)	$49.95
EP-PIC64 (62-5,72-4)	$39.95
EP-PIC12 (12C50x)	$39.95
EP-PIC17 (17C4x)	$49.95
EP-51(8751,C51)	$39.95
EP-11E (68HC11 E/A)	$59.95
EP-11D (68HC711D3)	$39.95
EP-16 (16bit 40pin EPROMS)	$49.95
EP-Z8(Z86E02,3,4,6,7,8)	$39.95
EP-SEE2 (93x,24x,25x,85x)	$39.95
EP-750 (87C750,1,2)	$59.95
EP-PEEL (ICT22v10,18v8)	$59.95
EP-1051 (89C1051,2051)	$39.95
EP-PLCC (PLCC EPROMs)	$49.95
EP-SOIC (SOIC EPROMs)	$49.95

Many Other Adapters Available

M²L Electronics
970/259-0555 Fax: 970/259-0777
250 CR 218 Durango, CO 81301
CO orders add 7% sales tax.
http://www.m2l.com

VideoEquip.com Surveillance Superstore!
Systems for Your Home and Office!

High Quality Mini Cams!

NEW! Wireless Mini-Cams!

Starting At $69! for wired cameras

- Built In Microphone
- See In Total Darkness
- HI Resolution
- Color or Black & White

WebView View Your Surveillance System On The Web!

-Easy To Install-
-Plug & Play-
-High Quality-
-Affordable-
-Deter Theft-
-Use ANY Camera!-

Complete System Bundles!

All Mounts and Cables Included!

- 4 to 16 Camera Bundles
- Color or Black/White
- Up to 21" Monitor
- Multiplexers
- Plug and Play!

For Home or Office!

Choose from Our Own Popular Set-Ups, or Build Your Own Bundle ONLINE!

Hidden Cams

Remote Pan & Tilt with Built-In Color Dome Camera

EXIT

Call Us For A FREE Full Color Catalog!

STOP GETTING RIPPED OFF!

Call Us Toll Free
1-877-647-2828

Visit Us Online @
www.VideoEquip.com

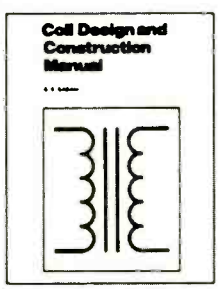

YOU CAN WIND YOUR OWN COILS?

There's no trick to it except knowing what you are doing. In a unique, 106-page book you can become expert in winding RF, IF, audio and power coils, chokes and transformers. Practically every type of coil is discussed and necessary calculations are given with the mathematical data simplified for use by anyone. Get your copy today!

Mail coupon to:

Electronics Technology Today, Inc.
P.O. Box 240 • Massapequa Park, NY 11762-0240

Please send me my copy of *Coil Design and Construction Manual* (BP160). I enclose a check or money order for $8.99 to cover the book's cost and shipping-and-handling expenses. NY state residents must add local sales tax.

Name _____

Address _____

City _____ State _____ ZIP _____

All orders must be paid in U.S. funds only. Sorry, no orders accepted outside of USA and Canada. Please allow 6-8 weeks for delivery. ET06

www.americanradiohistory.com

CLASSIFIEDS

BUSINESS OPPORTUNITIES

$400 WEEKLY ASSEMBLING Electronic Circuit Boards/Products From Home. For Free Information Send SASE: Home Assembly-PT Box 216 New Britain, CT 06050-0216

CABLE TV

DISCOVER CABLE'S NEWEST BOXES! "DESCRAMBLES WHERE OTHERS FAIL" LOWEST DEALER PRICES GUARANTEED. 1-888-777-9123 1-888-675-3687

MISC. ELECTRONICS FOR SALE

T&M ELECTRONICS. Large variety of electronic parts since 1966. Visit our Web site at www.tandmelectronics.com

PLANS-KITS-SCHEMATICS

Carl's Electronics – Hundreds of electronic kits, plus the latest in spy and surveillance. www.electronickits.com

REPAIRS & SERVICES

QUICKLINK PRIVATE WIRE establishes hotline between two telsets, modems, faxes. Many test, demo, intercom, hobby users, only $75. Datasheet, order form at www.camblab.com or phone 617-629-2805.

SATELLITE

FREE Satellite TV Buyer's Guide. BIG Dishes – BIG Deals! Get the MOST free and subscription channels with C-band digital upgrade! **SKYVISION.** 800-543-3025. International 218-739-5231. www.skyvision.com

Poptronics®

Interactive Edition

Projects...Courses...Articles...& more

Read it on the WEB!

- An e-magazine for everyone who loves electronics.
- Aimed at teaching electronics from the beginning with courses, tests and interactive questions to guarantee your success.
- Interesting articles and related items.
- Contains projects that can be ordered directly from the page, by simply clicking a button.

www.poptronics.com/interactive

Gernsback Publications, Inc.

275-G Marcus Blvd. Hauppauge NY 11788

POPTRONICS® CLASSIFIED ADVERTISING ORDER FORM

Advertiser Information

Name

Company

Street Address

City/State/Zip

Telephone ( )

Signature (required on all orders)

Payment Information

Charge my:

Master Card ☐ Visa ☐ Discover

Account No.

Exp. Date

☐ Full payment enclosed. Prepayment discounts offered for multiple insertions (except on credit card orders).

☐ Payment for first insertion enclose; additional payments will be made prior to closing dates. Prepayment discounts not available.

Do you want any special options? (where available)

☐ Boldface Type* Add 25% for entire ad ☐ Screened Background – Add 30%

☐ Special Heading – Add $35.00

The first word of your ad and your name will be printed in boldface caps, at no additional charge. For individual boldface words, add .50¢ each.

In what month(s) would you like your ad to run?

☐ Entire year for publications selected above.

☐ Jan. ☐ Feb. ☐ Mar. ☐ Apr. ☐ May. ☐ June ☐ July ☐ Aug. ☐ Sep. ☐ Oct. ☐ Nov. ☐ Dec.

Here's how to calculate the cost of your Regular or Expanded-Ad Classified:

Rate X Numbers of Words + Rate for Boldface + Rate for Screened Background = Cost per Insertion X Number of Months = Cost

Magazine	Rate	x	Number of Words (min. 15)	+ Boldface (add 25%)	+ Screened Background (add 30%)	= Cost Per Insertion	x Number of Months	= Cost
		x		+	+	=	x	=

Rates:

$3.00 per word **(New rate for renewals. New advertisers welcome.)**

Minimum 15 Words

Here's how to calculate the total cost of your advertising:

Prepayment Discount:

(Full payment must accompany order, not applicable on credit card orders)

Prepay for ☐ 6 insertions in one magazine, 5% ☐ 12 insertions in one magazine, 10%

Subtotal _____

Less Prepayment Discount _____

TOTAL COST $ _____

Please use a separate piece of paper to write your copy, or for any special instructions you may have.

HAVE A QUESTION? CALL: 1-631-592-6720 ext. 206

Fax signed orders with credit card information to : (631) 592-6723

GPI895

www.americanradiohistory.com

ADVERTISING INDEX

Poptronics does not assume any responsibility for errors that may appear in the index below.

Free Information Number		Page
–	Abacom	72
–	Active Elec. Components	77
–	Alan Broadband Co.	61
–	All Electronics	77
–	Amazon Electronics	61
–	Arrow Technologies	78
–	Basic Micro Inc.	60
–	Blue Bell Design, Inc.	60
290	C&S Sales, Inc.	64
233	Circuit Specialists	73
–	CLAGGK, Inc.	CV3
–	Classified Ads	79
320	Cleveland Inst. of Electronics	67, 74
321	Command Productions	63
–	Conitec Data Systems	68
–	Consumertronics	60
–	Designtech Engineering	63
–	EDE Spy Outlet	61
–	Electronic Design Specialists	76
–	Elect. Tech. Today	54
–	Electronix	68
–	EMAC, Inc.	66
–	Engineering Express	76
–	Fair Radio Sales	72
–	Global Specialties	62
220	Information Unlimited	69
–	Intec Automation	61
–	Intelligence Here	60
–	Intronics	76
–	IVEX Design	65
–	LT Sound	68
–	Lynxmotion	78
–	M^{2}L Electronics	78
324	MCM Electronics	CV4
–	Marrick Ltd.	11
143	McGraw-Hill Co.	CV2
323	Mendelsons	75
296	Merrimack Valley	71
–	microEngineering Labs	61
–	Modern Electronics	68
–	PAiA Electronics	60
–	PCB Express	60
228	Polaris Industries	59
–	Poptronics Reprint Bookstore	14
219	Prairie Digital	63
–	Progressive Concepts	68
263	Ramsey Electronics	70
–	Saelig Co. LLC	66
–	Scott Edwards Electronics	66
–	Scrambling News	60
–	Smarthome.com	72
–	Square 1 Electronics	61, 72
–	Techniks	61
–	Technological Arts	60
322	Test Equipment Depot	75
–	Test Supply Inc.	75
–	Timeline, Inc.	61
–	UCANDO Videos	66
–	Video Equipment.com	78
–	Vision Electronics	77
224	Visitect, Inc.	69
–	Walter Malecki	61
–	World Wyde	60

When you buy products from these advertisers, please tell them you saw their ads in Poptronics® magazine.

ADVERTISING SALES OFFICES

Gernsback Publications, Inc.
275-G Marcus Blvd.
Hauppauge, NY 11788
Tel. 631-592-6720
Fax: 631-592-6723

Larry Steckler
Publisher (ext. 201)
e-mail: advertising@gernsback.com

Adria Coren
Vice-President (ext. 208)

Ken Coren
Vice-President (ext. 267)

Marie Falcon
Advertising Director (ext. 206)

Adria Coren
Credit Manager (ext. 208)

For Advertising ONLY
EAST/SOUTHEAST

Marie Falcon
275-G Marcus Blvd.
Hauppauge, NY 11788
Tel. 631-592-6720 x206
Fax: 631-592-6723
e-mail: mfalcon@gernsback.com

MIDWEST/Texas/Arkansas/
Oklahoma

Ralph Bergen
One Northfield Plaza, Suite 300
Northfield, IL 60093-1214
Tel. 847-559-0555
Fax: 847-559-0562
e-mail: bergenrj@aol.com

PACIFIC COAST

Megan Mitchell
9072 Lawton Pine Avenue
Las Vegas, NV 89129-7044
Tel. 702-240-0184
Fax: 702-838-6924
e-mail: mmitchell@gernsback.com

Subscription/
Customer Service/
Order Entry
Tel. 800-827-0383
7:30 AM - 8:30 PM CST

www.poptronics.com

www.americanradiohistory.com

Electronics CD ROMs

This great range of CD ROM learning resources will teach you all about electronic circuits and systems and how to design them.

Electronic Circuits and Components V2 provides an introduction to the principles and application of the most common types of electronic components and how they are used to form complete circuits. Sections on the disc include: fundamental electronic theory, active components, passive components, analogue circuits, digital circuits, fault finding and the Parts Gallery.

Digital Electronics V2 details the principles and practice of digital electronics, including logic gates, combinational and sequential logic circuits, clocks, counters, shift registers, fault finding and displays. The CD ROM also provides an introduction to microprocessor based systems.

Analog Electronics is a complete learning resource for this most difficult subject. The CD ROM includes the usual wealth of virtual laboratories as well as an electronic circuit simulator with over 50 pre-designed analog circuits which gives you the ultimate learning tool. The CD provides comprehensive coverage of analog fundamentals, transistor circuit design, op-amps, filters, oscillators, and other analog systems.

Electronic Projects is just that: a series of ten projects for students to build with all support information. The CD is designed to provide a set of projects which will complement students' work on the other 3 CDs in the Electronics Education Series. Each project on the CD is supplied with schematic diagrams, circuit and PCB layout files, component lists and comprehensive circuit explanations.

Robotics and Mechatronics is designed to enable those with little previous experience of electronics to build electromechanical systems. The CD ROM deals with all aspects of robotics from the control systems used, the transducers available, motors/actuators and the circuits to drive them. Full case study material (include the NASA Mars Rover, the Milford spider and the Furby) is used to show students how practical robotic systems are designed.

Digital Works is a highly interactive scalable digital logic simulator designed to allow electronics and computer science students to build complex digital logic circuits incorporating circuit macros, 4000 and 74 series logic.

CADPACK includes software for schematic capture, circuit simulation, and PCB design and is capable of producing industrial quality schematics and circuit board layouts. CADPACK includes unique circuit design and animation/simulation that will help your students understand the basic operation of many circuits.

Analog Filters is a complete course in filter design and synthesis and contains expert systems to assist in designing active and passive filters.

PICmicro programming tools and CD ROMs

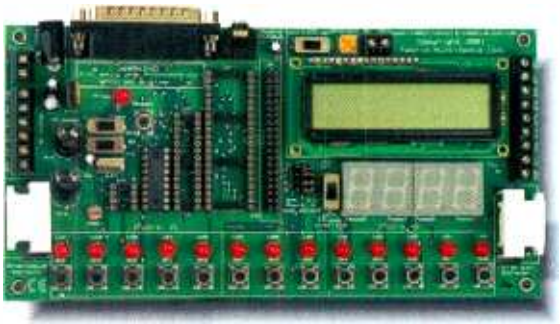

This flexible development board allows you to program 8, 18, 28, 40 pin PICmicro microcontrollers as well as test/develop code. All programming software is included and several resources which allow students to learn and program PICmicro microcontrollers are available - Flowcode, C for PICmicro microcontrollers and Assembly for PICmicro microcontrollers. A board is needed for the CD's below:

Flowcode is a very high level language programming system for PICmicro® microcontrollers based on flowcharts. Flowcode is a powerful language that uses macros to facilitate the control of complex devices like 7-sement displays, motor controllers, and LCD displays. The use of macros allows students to control highly complex electronic devices without getting bogged down in understanding the programming involved. Board not included.

The **Assembly for PICmicro microcontrollers** CD ROM (previously known as PICtutor) contains a complete course in programming the PIC16F84 microcontroller from Arizona Microchip. The CD includes a full suite of tutorials starting at basic concepts and progressing complex techniques including interrupts. An IDE and all programming tools are included. Board not included.

The **C for PICmicro® microcontrollers** CD ROM is designed for students and professionals who need to learn how to program embedded microcontrollers in C. C for PICmicro MCUs also provides all the tools needed actually program a virtually any PICmicro - including a full C compiler and device programmer (via printer port). Although the course focuses on the use of the PICmicro® series of microcontrollers this CD ROM will provide a relevant background in C programming for any microcontroller. Board not included.

Order Form

Please allow 6 weeks delivery

	Student / home version	Institution version
Electronic Ccts. & Comps. 2	$50	$99
Digital Electronics 2	$50	$99
Analog Electronics	$50	$99
Electronic Projects	$75	$159
Robotics and Mechatronics	$50	$99
Digital Works	$50	$99
CADPACK	$75	$159
Analog Filters	$75	$159
Assembly for PICmicros	$50	$159
C for PICmicros	$50	$159
Flowcode for PICmicros	$50	$99
PICmicro development board	$159	
Postage - USA	$5	$5
Postage - Canada	$10	$10

Note institution versions have increased functionality, increased assessment and are licenced for use in schools and corporations.

Name:

Address:

Zip: Phone:

Card Type:
Mastercard, Visa, or Discover only

Card number:

Expire date:

I have enclosed my check for $: Signature:

Please charge my credit card for $:

Phone your order to us on:
631-592-6721

or send your order to:
CLAGGK Inc.,
PO Box 12162,
Hauppage, NY 11788

CL02

Order online NOW from: www.poptronics.com

www.americanradiohistory.com

Tools and Test Equipment

MCM

What You Want..... Today!™

click it
phone it
fax it

mcmelectronics®

You Must Provide this Source Code to Receive Discount or Special Pricing

POP98

call toll free
1-800-543-4330

fax toll free
1-800-765-6960

customer service call toll free
1-877-626-3532

www.mcmelectronics.com

For more Electronics Visit our website

- Audio Products
- Books
- Cameras
- Car Audio and Security
- Computer Accessories
- Games
- Headphones
- Home Theater
- Joysticks
- Personal Electronics
- Radios
- Receivers
- Test Equipment
- Tools
- Tool Boxes/Cases
- More

TENMA®

Pen DMM with Logic Function

1 YEAR LIMITED WARRANTY

Features: •Large 3¾ digit, 3999 count LCD display •Autoranging with auto polarity •Data hold •Auto power off •TTL logic test •AC and DC voltage and current measurement •Resistance with continuity beeper •Fuse protected current •Meets IEC-1010 safety standards 600V CAT II applications •Includes 9V battery, ground lead, alligator clip, probe tip covers and owners manual

Order # 72-6620 Reg. ~~$34.95~~ **Only! $29.95**

Heat Gun

•Rugged lightweight heat gun for shrinking heat shrink tubing, stripping paint and varnish, removing weather stripping, and more •Two temperature ranges (High: 1100°F, Low: 700°F) •Two speed ranges •Solid state construction •Operates on 110VAC •UL listed

Order # 21-7315 Reg. ~~$21.25~~ **Only! $17.95**

You must provide this Source Code to receive a discount

SOURCE CODE #POP98

Heat Shrink Kit

•Features high-quality ICO-Rally heat shrink products •Contains 72 pieces of the most popular heat shrink sizes and colors •6" length

Order # 102-011 Reg. ~~$29.95~~ **Only! $26.95**

32 Piece Security Bit Set

Handy pocket size set contains many of the bits commonly used to remove tamper resistant screws found in many of today's electronic products. Items like IBM PS/2 monitors, cable boxes, telephone equipment and much more, commonly use these type of screws. Bits fit any standard ¼" hex driver such as #22-1620 or 22-1621 and most power screwdrivers.

Order # 22-1875 Reg. ~~$12.99~~ **Only! $8.99**

Laser Leveler

•High output, high precision laser projects a ¼" round dot or line up to 1,500 feet away •Align speakers, cabinets, shelving, and electrical fixtures •Locking on/off button allows for hands-free operation •Operates on two "AAA" batteries included

Order # 22-4145 Reg. ~~$49.95~~ **Only! $29.95**

velleman-kit

1 YEAR LIMITED WARRANTY

Hand Held Personal Oscilloscope

The HPS5 from Velleman is a fully assembled and tested hand held oscilloscope with a built-in DMM. **Features:** •Auto set up oVolts/div and Time/div increment and decrement •X1 and X10 probe attenuation •Input coupling: AC/DC/GND •Trigger modes: AUTO, NORM, SINGLE •Single shot: Start-stop-reset •Hold/run •Slope: + or - •Zero reference for DC and dB measurement •Time and voltage markers •Graticule displays: Markers, grid, crosshair, none •Square wave output for X10 probe adjustment •DMM function: AC True RMS, DCV, Vmax/min, Vpp, dBm and dB •Power requirements: Five "AA" batteries not included (#290-070) or optional AC adaptor listed below •Includes carrying case, test lead and owners manual

Order # 72-6684 Reg. ~~$199.00~~ **Only! $169.00**

Source Code: POP98 Prices effective June 1 thru September 7, 2002.

A Premier Farnell Company

CIRCLE 324 ON FREE INFORMATION CARD

www.americanradiohistory.com