CONTENTS

Honors List xi
Preface xvii
How to Use This Handbook xix

Part A: Piping Fundamentals

Chapter A1. Introduction to Piping *Mohinder L. Nayyar* **A.1**

Chapter A2. Piping Components *Ervin L. Geiger* **A.53**

Chapter A3. Piping Materials *James M. Tanzosh* **A.125**

Chapter A4. Piping Codes and Standards *Mohinder L. Nayyar* **A.179**

Chapter A5. Manufacturing of Metallic Piping *Daniel R. Avery and Alfred Lohmeier* **A.243**

Chapter A6. Fabrication and Installation of Piping *Edward F. Gerwin* **A.261**

Chapter A7. Bolted Joints *Gordon Britton* **A.331**

Chapter A8. Prestressed Concrete Cylinder Pipe and Fittings *Richard E. Deremiah* **A.397**

Chapter A9. Grooved and Pressfit Piping Systems *Louis E. Hayden, Jr.* **A.417**

Chapter A10. Selection and Application of Valves *Mohinder L. Nayyar, Dr. Hans D. Baumann* **A.459**

Part B: Generic Design Considerations

Chapter B1. Hierarchy of Design Documents *Sabin Crocker, Jr.* **B.1**

Chapter B2. Design Bases *Joseph H. Casiglia* **B.19**

Chapter B3. Piping Layout *Lawrence D. Lynch, Charles A. Bullinger, Alton B. Cleveland, Jr.* **B.75**

Chapter B4. Stress Analysis of Piping *Dr. Chakrapani Basavaraju, Dr. William Saifung Sun* **B.107**

Chapter B5. Piping Supports *Lorenzo Di Giacomo, Jr., Jon R. Stinson* **B.215**

Chapter B6. Heat Tracing of Piping *Chet Sandberg, Joseph T. Lonsdale, J. Erickson* **B.241**

Chapter B7. Thermal Insulation of Piping *Kenneth R. Collier, Kathleen Posteraro* **B.287**

Chapter B8. Flow of Fluids *Dr. Tadeusz J. Swierzawski* **B.351**

Chapter B9. Cement-Mortar and Concrete Linings for Piping *Richard E. Deremiah* **B.469**

Chapter B10. Fusion Bonded Epoxy Internal Linings and External Coatings for Pipeline Corrosion Protection *Alan Kehr* **B.481**

Chapter B11. Rubber Lined Piping Systems *Richard K. Lewis, David Jentzsch* **B.507**

Chapter B12. Plastic Lined Piping for Corrosion Resistance
Michael B. Ferg, John M. Kalnins B.533

Chapter B13. Double Containment Piping Systems
Christopher G. Ziu B.569

Chapter B14. Pressure and Leak Testing of Piping Systems
Robert B. Adams, Thomas J. Bowling B.651

Part C: Piping Systems

Chapter C1. Water Systems Piping *Michael G. Gagliardi, Louis J. Liberatore* C.1

Chapter C2. Fire Protection Piping Systems *Russell P. Fleming, Daniel L. Arnold* C.53

Chapter C3. Steam Systems Piping *Daniel A. Van Duyne* C.83

Chapter C4. Building Services Piping *Mohammed N. Vohra, Paul A. Bourquin* C.135

Chapter C5. Oil Systems Piping *Charles L. Arnold, Lucy A. Gebhart* C.181

Chapter C6. Gas Systems Piping *Peter H. O. Fischer* C.249

Chapter C7. Process Systems Piping *Rod T. Mueller* C.305

Chapter C8. Cryogenic Systems Piping *Dr. N. P. Theophilos, Norman H. White, Theodore F. Fisher, Robert Zawierucha, M. J. Lockett, J. K. Howell, A. R. Belair, R. C. Cipolla, Raymond Dale Woodward* C.391

Chapter C9. Refrigeration Systems Piping *William V. Richards* C.457

Chapter C10. Hazardous Piping Systems *Ronald W. Haupt* **C.533**

Chapter C11. Slurry and Sludge Systems Piping *Ramesh L. Gandhi* **C.567**

Chapter C12. Wastewater and Stormwater Systems Piping
Dr. Ashok L. Lagvankar, John P. Velon **C.619**

Chapter C13. Plumbing Piping Systems *Michael Frankel* **C.667**

Chapter C14. Ash Handling Piping Systems *Vincent C. Ionita, Joel H. Aschenbrand* **C.727**

Chapter C15. Compressed Air Piping Systems *Michael Frankel* **C.755**

Chapter C16. Compressed Gases and Vacuum Piping Systems
Michael Frankel **C.801**

Chapter C17. Fuel Gas Distribution Piping Systems *Michael Frankel* **C.839**

Part D: Nonmetallic Piping

Chapter D1. Thermoplastics Piping *Dr. Timothy J. McGrath, Stanley A. Mruk* **D.1**

Chapter D2. Fiberglass Piping Systems *Carl E. Martin* **D.79**

Part E: Appendices

Appendix E1. Conversion Tables *Ervin L. Geiger* **E.1**

Appendix E2. Pipe Properties (US Customary Units)
Dr. Chakrapani Basavaraju **E.13**

Appendix E2M. Pipe Properties (Metric) *Dr. Chakrapani Basavaraju* E.23

Appendix E3. Tube Properties (US Customary Units) *Ervin L. Geiger* E.31

Appendix E3M. Tube Properties (Metric) *Troy J. Skillen* E.37

Appendix E4. Friction Loss for Water in Feet per 100 Feet of Pipe E.39

Appendix E4M. Friction Loss for Water in Meters per 100 Meters of Pipe *Troy J. Skillen* E.59

Appendix E5. Acceptable Pipe, Tube and Fitting Materials per the ASME Boiler and Pressure Vessel Code and the ASME Pressure Piping Code *Jill M. Hershey* E.61

Appendix E6. International Piping Material Specifications *R. Peter Deubler* E.69

Appendix E7. Miscellaneous Fluids and Their Properties *Akhil Prakash* E.83

Appendix E8. Miscellaneous Materials and Their Properties *Akhil Prakash* E.101

Appendix E9. Piping Related Computer Programs and Their Capabilities *Anthony W. Paulins* E.109

Appendix E10. International Standards and Specifications for Pipe, Tube, Fittings, Flanges, Bolts, Nuts, Gaskets and Valves *Soami D. Suri* E.119

Index I.1

PREFACE

It is with great sense of gratitude and humility I take this blessed moment to offer this Seventh Edition of *Piping Handbook.* The challenge presented by the success of the Sixth Edition, coupled with our objective to enhance its reference value and widen its scope, motivated us to reach out and draw upon the recognized expertise on piping related topics not covered in the Sixth Edition. In addition, we directed our synergetic efforts to upgrade the existing contents to include the latest advances and developments in the field of piping and related technologies.

Fifteen (15) new chapters and nine (9) new appendixes have been added. These additions accord a unique status to this resource book as it covers piping related topics not covered in any one book. Inclusion of metric and/or SI units along with US customary units is intended to accommodate the growing needs of the shrinking world and the realities of the international market. We have maintained the familiar and easy to use format of the Sixth Edition.

I consider myself fortunate to have the opportunity to associate and work with renowned and recognized specialists and leaders whose contributions are not limited to this *Piping Handbook,* but go far beyond. For me it has been a rewarding and enlightening experience. I find myself humbled by depth of their knowledge, practical experience, and professional achievements. These distinguished contributors have offered the sum total of their know how in the form of guidance, cautions, prohibitions, recommendations, practical illustrations, and examples, which should be used prudently with due consideration for application requirements. The strength, authenticity, and utility of this reference book lie in the wide spread diversity of their expertise and unity of their professionalism.

Based upon the feedback received over the past seven years from the users of the Sixth Edition of this handbook, I feel honored to express my and users gratitude to all the contributors for their commitment to their profession and their higher goal of helping others. They have made the difference. Their spirit of giving back has not only continued, but has brought in new contributors to expand the scope and enhance the utility of this handbook. I feel confident that all the contributors shall enjoy the professional satisfaction and the gratitude of users of this handbook.

The selfless efforts of all the reviewers listed in the Honors List are of great significance in making improvements in presentation of the subject matter. The extent of their experience, knowledge, and an insight of topics has been instrumental in extracting the best out of contributors and upgrading the contents of this handbook.

The contributors and reviewers have earned a distinguished status. I salute their commitment; admire their efforts; respect their professionalism; and applaud their achievements. I want to recognize their perseverance, dedication, hard work and sincerity of their commitment in spite of increasing demands on their time.

I am indebted to the members of the editorial team who spent countless hours and made personal sacrifices to make this team project a reality. Jill Hershey, Troy Skillen, and Soami Suri did not spare any effort to not only fulfill their commitment, but went beyond to accomplish the objectives. They offered constructive comments, new ideas and energy to support them. In addition to contributing, they assisted me in reviewing, editing, checking and correcting the manuscript. Furthermore, they provided an objective assessment of needs of progressive professionals involved in piping related fields. Their efforts reinforced my faith in bright future of our profession. The support and assistance provided by Ervin L. Geiger and Sabin Crocker, Jr., as Associate Editors, is key to the successful completion of this effort.

Each and every individual providing administrative, technical and automation services, listed in Honors List, kept the entire process moving smoothly by their sincere efforts. Linda Ludewig, Peggy Lamb, and the others at McGraw-Hill could not be better or more cooperative in accommodating our reasonable and unreasonable requests in producing this handbook to the best of their abilities.

Whenever you, the readers and users of this handbook, find it to be of help in your mission, please thank the contributors, reviewers, technical, administrative and automation personnel listed in the Honors List, and the editorial and production staff of McGraw-Hill. If, at any time, this handbook falls short of your expectations, please do not hesitate to pass it on to me. It will help us improve the contents and their utility. I shall owe you my gratitude.

I take pride in recognizing the active support of my daughters, Mukta and Mahak; and my son, Manav; who helped me in researching and collecting data; preparing manuscript; reviewing proof pages; and performing other tasks, as needed. This time they not only allowed me to devote their share of my life to this handbook, but also dedicated a part of their life to it. My wife, Prabha, provided the proverbial support a spouse can hope for, in doing and accomplishing what I aimed for. No words can convey my feelings and thoughts for her contributions.

Mohinder L. Nayyar

HOW TO USE THIS HANDBOOK

As with any handbook, the user of this handbook can seek the topic covered either with the help of the table of contents or the index. However, an understanding of the organization and the format of this handbook will enhance its utility.

The handbook is organized in five parts:

Part A, Piping Fundamentals: There are ten chapters in Part A, numbered Al through A10, dealing with commonly used terminology associated with piping units—U.S. Customary units and metric/SI units, piping components, materials, piping codes and standards, manufacturing of piping, fabrication and installation of piping, bolted joints, prestressed concrete piping, and grooved and Pressfit piping systems, Each chapter is a self-contained unit. The chapter numbers, figures and tables sequentially preceded. For example, in the case of Chapter Al, the figures are numbered as Fig. A1.1, Fig. A1.2, and so on, and tables are numbered as Table A1.1, Table A1.2, and so on. Pages are numbered sequentially throughout each part, starting with A.1.

Part B, Generic Design Considerations: The Part B consists of fourteen chapters. The topics covered deal with generic design considerations, which may be applicable to any piping system irrespective of the fluid or the mixture carried by the piping. The generic topics are design documents, design bases, piping layout, stress analysis, piping supports, heat tracing, thermal insulation, and flow of fluids. In addition, the lined piping systems: cement, rubber, epoxy and plastic lined piping systems are included to provide guidance when corrosion is a concern. A chapter on double containment piping systems provides needed guidance to handle hazardous fluids. The last chapter in Part B deals with pressure testing of piping systems. The chapter, page, figure, and table numbering scheme is similar to that described for Part A.

Part C, Piping Systems: There are 17 chapters in Part C, each dealing with a specific type of piping system or systems involving application of specific considerations. The piping systems covered include water, fire protection, steam, building services, oil, gas, chemical and refinery (process piping), cryogenic, refrigeration, toxic and hazardous wastes, slurry and sludge, stormwater and wastewater, plumbing, ash handling, compressed air and vacuum, fuel gas and laboratory piping systems. The numbering approach for Part C is similar to Part A.

Part D, Nonmetallic Piping: Part D has two chapters, Dl and D2. Chapter Dl addresses thermoplastics piping, and Chapter D2 covers fiberglass piping systems. The numbering scheme for pages, figures, and tables is similar to the one followed for Part A.

Part E, Appendixes: Part E of the handbook contains reference technical data and information that could be very handy and useful to the users. It consists of 10 appendixes, El through E10. They include conversion tables, pipe and tube properties, pressure drop tables, ASTM and international piping materials, fluid properties, piping related computer programs, and an exhaustive list of international standards.

Depending upon the need, level of piping knowledge, and requirements, the user of this handbook may find it very convenient to locate the desired information by focusing on a specific part of the handbook.

Last but not least, the Seventh Edition of *Piping Handbook* includes metric/SI units in parentheses. The values stated in each system are not exact equivalents; therefore, each system must be used independently of the other. At times, unit equivalents are rounded off while at places they are approximated to provide a measure of equivalency. Different approaches have been followed depending upon the practices prevalent in a segment of the piping industry. We regret the variations and expect the users to understand the state of the art in regard to use of units. The users are cautioned to check and verify units prior to making calculations with the help of equations included in the handbook or elsewhere.

PART A

PIPING FUNDAMENTALS

CHAPTER A1

INTRODUCTION TO PIPING

Mohinder L Nayyar, P. E.
ASME Fellow
Bechtel Power Corporation

INTRODUCTION

Piping systems are like arteries and veins. They carry the lifeblood of modern civilization. In a modern city they transport water from the sources of water supply to the points of distribution; convey waste from residential and commercial buildings and other civic facilities to the treatment facility or the point of discharge. Similarly, pipelines carry crude oil from oil wells to tank farms for storage or to refineries for processing. The natural gas transportation and distribution lines convey natural gas from the source and storage tank forms to points of utilization, such as power plants, industrial facilities, and commercial and residential communities. In chemical plants, paper mills, food processing plants, and other similar industrial establishments, the piping systems are utilized to carry liquids, chemicals, mixtures, gases, vapors, and solids from one location to another.

The fire protection piping networks in residential, commercial, industrial, and other buildings carry fire suppression fluids, such as water, gases, and chemicals to provide protection of life and property. The piping systems in thermal power plants convey high-pressure and high-temperature steam to generate electricity. Other piping systems in a power plant transport high- and low-pressure water, chemicals, low-pressure steam, and condensate. Sophisticated piping systems are used to process and carry hazardous and toxic substances. The storm and wastewater piping systems transport large quantities of water away from towns, cities, and industrial and similar establishments to safeguard life, property, and essential facilities.

In health facilities, piping systems are used to transport gases and fluids for medical purposes. The piping systems in laboratories carry gases, chemicals, vapors, and other fluids that are critical for conducting research and development. In short, the piping systems are an essential and integral part of our modern civilization just as arteries and veins are essential to the human body.

The design, construction, operation, and maintenance of various piping systems involve understanding of piping fundamentals, materials, generic and specific design considerations, fabrication and installation, examinations, and testing and inspection requirements, in addition to the local, state and federal regulations.

PIPING

Piping includes pipe, flanges, fittings, bolting, gaskets, valves, and the pressure-containing portions of other piping components. It also includes pipe hangers and supports and other items necessary to prevent overpressurization and overstressing of the pressure-containing components. It is evident that pipe is one element or a part of piping. Therefore, pipe sections when joined with fittings, valves, and other mechanical equipment and properly supported by hangers and supports, are called *piping*.

Pipe

Pipe is a tube with round cross section conforming to the dimensional requirements of

• ASME B36.10M	Welded and Seamless Wrought Steel Pipe
• ASME B36.19M	Stainless Steel Pipe

Pipe Size

Initially a system known as *iron pipe size* (IPS) was established to designate the pipe size. The size represented the approximate inside diameter of the pipe in inches. An IPS 6 pipe is one whose inside diameter is approximately 6 inches (in). Users started to call the pipe as 2-in, 4-in, 6-in pipe and so on. To begin, each pipe size was produced to have one thickness, which later was termed as *standard* (STD) or *standard weight* (STD. WT.). The outside diameter of the pipe was standardized.

As the industrial requirements demanded the handling of higher-pressure fluids, pipes were produced having thicker walls, which came to be known as *extra strong* (XS) or *extra heavy* (XH). The higher pressure requirements increased further, requiring thicker wall pipes. Accordingly, pipes were manufactured with *double extra strong* (XXS) or *double extra heavy* (XXH) walls while the standardized outside diameters are unchanged.

With the development of stronger and corrosion-resistant piping materials, the need for thinner wall pipe resulted in a new method of specifying pipe size and wall thickness. The designation known as *nominal pipe size* (NPS) replaced IPS, and the term *schedule* (SCH) was invented to specify the nominal wall thickness of pipe.

Nominal pipe size (NPS) is a dimensionless designator of pipe size. It indicates standard pipe size when followed by the specific size designation number without an inch symbol. For example, NPS 2 indicates a pipe whose outside diameter is 2.375 in. The NPS 12 and smaller pipe has outside diameter greater than the size designator (say, 2, 4, 6, . . .). However, the outside diameter of NPS 14 and larger pipe is the same as the size designator in inches. For example, NPS 14 pipe has an outside diameter equal to 14 in. The inside diameter will depend upon the pipe wall thickness specified by the schedule number. Refer to ASME B36.10M or ASME B36.19M. Refer to App. E2 or E2M.

Diameter nominal (DN) is also a dimensionless designator of pipe size in the metric unit system, developed by the International Standards Organization (ISO). It indicates standard pipe size when followed by the specific size designation number

TABLE A1.1 Pipe Size Designators: NPS and DN

NPS	DN	NPS	DN	NPS	DN	NPS	DN
⅛	6	3½	90	22	550	44	1100
¼	8	4	100	24	600	48	1200
¾	10	5	125	26	650	52	1300
½	15	6	150	28	700	56	1400
¾	20	8	200	30	750	60	1500
1	25	10	250	32	800	64	1600
1¼	32	12	300	34	850	68	1700
1½	40	14	350	36	900	72	1800
2	50	16	400	38	950	76	1900
2½	65	18	450	40	1000	80	2000
3	80	20	500	42	1050	—	—

Notes:

1. For sizes larger than NPS 80, determine the DN equivalent by multiplying NPS size designation number by 25.

without a millimeter symbol. For example, DN 50 is the equivalent designation of NPS 2. Refer to Table A1.1 for NPS and DN pipe size equivalents.

Pipe Wall Thickness

Schedule is expressed in numbers (5, 5S, 10, 10S, 20, 20S, 30, 40, 40S, 60, 80, 80S, 100, 120, 140, 160). A schedule number indicates the approximate value of the expression 1000 *P/S,* where *P* is the service pressure and *S* is the allowable stress, both expressed in pounds per square inch (psi). The higher the schedule number, the thicker the pipe is. The outside diameter of each pipe size is standardized. Therefore, a particular nominal pipe size will have a different inside diameter depending upon the schedule number specified.

Note that the original pipe wall thickness designations of STD, XS, and XXS have been retained; however, they correspond to a certain schedule number depending upon the nominal pipe size. The nominal wall thickness of NPS 10 and smaller schedule 40 pipe is same as that of STD. WT. pipe. Also, NPS 8 and smaller schedule 80 pipe has the same wall thickness as XS pipe.

The schedule numbers followed by the letter S are per ASME B36.19M, and they are primarily intended for use with stainless steel pipe. The pipe wall thickness specified by a schedule number followed by the letter S may or may not be the same as that specified by a schedule number without the letter S. Refer to ASME B36.19M and ASME B36.10M.[10,11]

ASME B36.19M does not cover all pipe sizes. Therefore, the dimensional requirements of ASME B36.10M apply to stainless steel pipe of the sizes and schedules not covered by ASME B36.19M.

PIPING CLASSIFICATION

It is usual industry practice to classify the pipe in accordance with the pressure-temperature rating system used for classifying flanges. However, it is not essential

TABLE A1.2 Piping Class Ratings Based on ASME B16.5 and Corresponding PN Designators

Class	150	300	400	600	900	1500	2500
PN	20	50	68	110	150	260	420

Notes:

1. Pressure-temperature ratings of different classes vary with the temperature and the material of construction.
2 For pressure-temperature ratings, refer to tables in ASME B16.5, or ASME B16.34.

that piping be classified as Class 150, 300, 400, 600, 900, 1500, and 2500. *The piping rating must be governed by the pressure-temperature rating of the weakest pressure-containing item in the piping.* The weakest item in a piping system may be a fitting made of weaker material or rated lower due to design and other considerations. Table A1.2 lists the standard pipe class ratings based on ASME B16.5 along with corresponding *pression nominal* (PN) rating designators. *Pression nominal* is the French equivalent of pressure nominal.

In addition, the piping may be classified by class ratings covered by other ASME standards, such as ASME B16.1, B16.3, B16.24, and B16.42. A piping system may be rated for a unique set of pressures and temperatures not covered by any standard.

Pression nominal (PN) is the rating designator followed by a designation number, which indicates the approximate pressure rating in *bars*. The bar is the unit of pressure, and 1 bar is equal to 14.5 psi or 100 kilopascals (kPa). Table A1.2 provides a cross-reference of the ASME class ratings to PN rating designators. It is evident that the PN ratings do not provide a proportional relationship between different PN numbers, whereas the class numbers do. Therefore, it is recommended that class numbers be used to designate the ratings. Refer to Chap. B2 for a more detailed discussion of class rating of piping systems.

OTHER PIPE RATINGS

Manufacturer's Rating

Based upon a unique or proprietary design of a pipe, fitting, or joint, the manufacturer may assign a pressure-temperature rating that may form the design basis for the piping system. Examples include Victaulic couplings and the Pressfit system discussed in Chap. A9.

In no case shall the manufacturer's rating be exceeded. In addition, the manufacturer may impose limitations which must be adhered to.

NFPA Ratings

The piping systems within the jurisdiction of the National Fire Protection Association (NFPA) requirements are required to be designed and tested to certain required pressures. These systems are usually rated for 175 psi (1207.5 kPa), 200 psi (1380 kPa), or as specified.

AWWA Ratings

The American Water Works Association (AWWA) publishes standards and specifications, which are used to design and install water pipelines and distribution system piping. The ratings used may be in accordance with the flange ratings of AWWA C207, Steel Pipe Flanges; or the rating could be based upon the rating of the joints used in the piping.

Specific or Unique Rating

When the design pressure and temperature conditions of a piping system do not fall within the pressure-temperature ratings of above-described rating systems, the designer may assign a specific rating to the piping system. Examples of such applications include main steam or hot reheat piping of a power plant, whose design pressure and design temperature may exceed the pressure-temperature rating of ASME B16.5 Class 2500 flanges. It is normal to assign a specific rating to the piping. This rating must be equal to or higher than the design conditions. The rating of all pressure-containing components in the piping system must meet or exceed the specific rating assigned by the designer.

Dual Ratings

Sometimes a piping system may be subjected to full-vacuum conditions or submerged in water and thus experience external pressure, in addition to withstanding the internal pressure of the flow medium. Such piping systems must be rated for both internal and external pressures at the given temperatures. In addition, a piping system may handle more than one flow medium during its different modes of operation. Therefore, such a piping system may be assigned a dual rating for two different flow media. For example, a piping system may have condensate flowing through it at some lower temperature during one mode of operation while steam may flow through it at some higher temperature during another mode of operation. It may be assigned two pressure ratings at two different temperatures.

GENERAL DEFINITIONS

Absolute Viscosity. Absolute viscosity or the coefficient of absolute viscosity is a measure of the internal resistance. In the centimeter, gram, second (cgs) or metric system, the unit of absolute viscosity is the poise (abbreviated P), which is equal to 100 centipoise (cP). The English units used to measure or express viscosity are slugs per foot-second or pound force seconds per square foot. Sometimes, the English units are also expressed as pound mass per foot-second or poundal seconds per square foot. Refer to Chap. B8 of this handbook.

Adhesive Joint. A joint made in plastic piping by the use of an adhesive substance which forms a continuous bond between the mating surfaces without dissolving either one of them. Refer to Part D of this handbook.

Air-Hardened Steel. A steel that hardens during cooling in air from a temperature above its transformation range.[1]

Alloy Steel. A steel which owes its distinctive properties to elements other than carbon. Steel is considered to be alloy steel when the maximum of the range given for the content of alloying elements exceeds one or more of the following limits[2]:

Manganese	1.65 percent
Silicon	0.60 percent
Copper	0.60 percent

or a definite range or a definite minimum quantity of any of the following elements is specified or required within the limits of the recognized field of constructional alloy steels:

Aluminum
Boron
Chromium (up to 3.99 percent)
Cobalt
Columbium
Molybdenum
Nickel
Titanium
Tungsten
Vanadium
Zirconium

or any other alloying element added to obtain a desired alloying effect.

Small quantities of certain elements are unavoidably present in alloy steels. In many applications, these are not considered to be important and are not specified or required. When not specified or required, they should not exceed the following amounts:

Copper	0.35 percent
Chromium	0.20 percent
Nickel	0.25 percent
Molybdenum	0.06 percent

Ambient Temperature. The temperature of the surrounding medium, usually used to refer to the temperature of the air in which a structure is situated or a device operates.

Anchor. A rigid restraint providing substantially full fixation, permitting neither translatory nor rotational displacement of the pipe.

Annealing. Heating a metal to a temperature above a critical temperature and holding above that range for a proper period of time, followed by cooling at a suitable rate to below that range for such purposes as reducing hardness, improving machinability, facilitating cold working, producing a desired microstructure, or obtaining desired mechanical, physical, or other properties.[3] (A softening treatment is often carried out just below the critical range which is referred to as a subcritical annealing.)

Arc Cutting. A group of cutting processes in which the severing or removing of metals is effected by melting with the heat of an arc between an electrode and the base metal (includes carbon, metal, gas metal, gas tungsten, plasma, and air carbon arc cutting). *See also* Oxygen Cutting.

Arc Welding. A group of welding processes in which coalescence is produced by heating with an electric arc or arcs, with or without the application of pressure and with or without the use of filler metal.[3,4]

Assembly. The joining together of two or more piping components by bolting, welding, caulking, brazing, soldering, cementing, or threading into their installed location as specified by the engineering design.

Automatic Welding. Welding with equipment which performs the entire welding operation without constant observation and adjustment of the controls by an operator. The equipment may or may not perform the loading and unloading of the work.[3,5]

Backing Ring. Backing in the form of a ring that can be used in the welding of piping to prevent weld spatter from entering a pipe and to ensure full penetration of the weld to the inside of the pipe wall.

Ball Joint. A component which permits universal rotational movement in a piping system.[5]

Base Metal. The metal to be welded, brazed, soldered, or cut. It is also referred to as *parent* metal.

Bell-Welded Pipe. Furnace-welded pipe produced in individual lengths from cut-length skelp, having its longitudinal butt joint forge-welded by the mechanical pressure developed in drawing the furnace-heating skelp through a cone-shaped die (commonly known as a *welding bell*), which serves as a combined forming and welding die.

Bevel. A type of edge or end preparation.

Bevel Angle. The angle formed between the prepared edge of a member and a plane perpendicular to the surface of the member. See Fig. A1.1.

Blank Flange. A flange that is not drilled but is otherwise complete.

Blind Flange. A flange used to close the end of a pipe. It produces a blind end which is also known as a *dead end.*

Bond. The junction of the weld metal and the base metal, or the junction of the base metal parts when weld metal is not present. See Fig. A1.2.

Branch Connection. The attachment of a branch pipe to the run of a main pipe with or without the use of fittings.

Braze Welding. A method of welding whereby a groove, fillet, plug, or slot weld is made using a nonferrous filler metal having a melting point below that of the

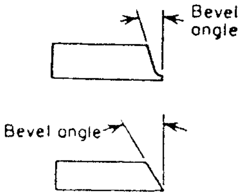

FIGURE A1.1 Bevel angle.

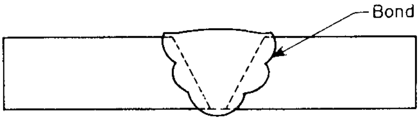

FIGURE A1.2 Bond between base metal and weld metal.

base metals, but above 800°F. The filler metal is not distributed in the joint by capillary action.[5] (*Bronze* welding, the term formerly used, is a misnomer.)

Brazing. A metal joining process in which coalescence is produced by use of a nonferrous filler metal having a melting point above 800°F but lower than that of the base metals joined. The filler metal is distributed between the closely fitted surfaces of the joint by capillary action.[5]

Butt Joint. A joint between two members lying approximately in the same plane.[5]

Butt Weld. Weld along a seam that is butted edge to edge. See Fig. A1.3.

Bypass. A small passage around a large valve for warming up a line. An emergency connection around a reducing valve, trap, etc., to use in case it is out of commission.

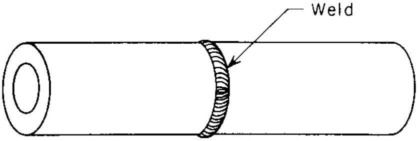

FIGURE A1.3 A circumferential butt-welded joint.

Carbon Steel. A steel which owes its distinctive properties chiefly to the carbon (as distinguished from the other elements) which it contains. Steel is considered to be carbon steel when no minimum content is specified or required for aluminum, boron, chromium, cobalt, columbium, molybdenum, nickel, titanium, tungsten, vanadium, or zirconium or for any other element added to obtain a desired alloying effect; when the specified minimum for copper does not exceed 0.40 percent; or when the maximum content specified for any of the following elements does not exceed the percentages noted: manganese, 1.65 percent; silicon, 0.60 percent; copper, 0.60 percent.[2]

Cast Iron. A generic term for the family of high carbon-silicon-iron casting alloys including gray, white, malleable, and ductile iron.

Centrifugally Cast Pipe. Pipe formed from the solidification of molten metal in a rotating mold. Both metal and sand molds are used. After casting, if required the pipe is machined, to sound metal, on the internal and external diameters to the surface roughness and dimensional requirements of the applicable material specification.

Certificate of Compliance. A written statement that the materials, equipment, or services are in accordance with the specified requirements. It may have to be supported by documented evidence.[6]

Certified Material Test Report (CMTR). A document attesting that the material is in accordance with specified requirements, including the actual results of all required chemical analyses, tests, and examinations.[6]

Chamfering. The preparation of a contour, other than for a square groove weld, on the edge of a member for welding.

Cold Bending. The bending of pipe to a predetermined radius at any temperature below some specified phase change or transformation temperature but especially at or near room temperature. Frequently, pipe is bent to a radius of 5 times the nominal pipe diameter.

Cold Working. Deformation of a metal plastically. Although ordinarily done at room temperature, cold working may be done at the temperature and rate at which strain hardening occurs. Bending of steel piping at 1300°F (704°C) would be considered a cold-working operation.

Companion Flange. A pipe flange suited to connect with another flange or with a flanged valve or fitting. A loose flange which is attached to a pipe by threading, van stoning, welding, or similar method as distinguished from a flange which is cast integrally with a fitting or pipe.

Consumable Insert. Preplaced filler metal which is completely fused into the root of the joint and becomes part of the weld.[1] See Fig. A1.4.

Continuous-Welded Pipe. Furnace-welded pipe produced in continuous lengths from coiled skelp and subsequently cut into individual lengths, having its longitudinal butt joint forge-welded by the mechanical pressure developed in rolling the hot-formed skelp through a set of round pass welding rolls.[3]

Contractor. The entity responsible for furnishing materials and services for fabrication and installation of piping and associated equipment.

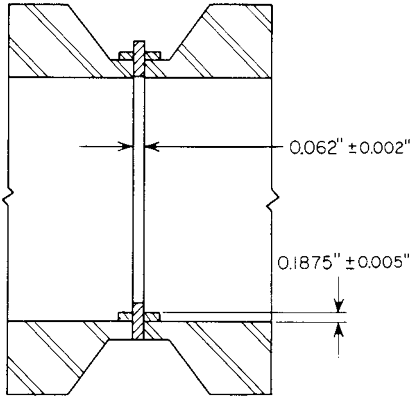

FIGURE A1.4 Consumable insert ring inserted in pipe joint eccentrically for welding in horizontal position.

Control Piping. All piping, valves, and fittings used to interconnect air, gas, or hydraulically operated control apparatus or instrument transmitters and receivers.[2]

Controlled Cooling. A process of cooling from an elevated temperature in a predetermined manner to avoid hardening, cracking, or internal damage or to produce a desired metallurgical microstructure. This cooling usually follows the final hot-forming or postheating operation.

Corner Joint. A joint between two members located approximately at right angles to each other in the form of an L. See Fig. A1.5.

Coupling. A threaded sleeve used to connect two pipes. Commercial couplings have internal threads to fit external threads on pipe.

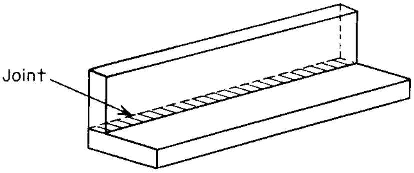

FIGURE A1.5 Corner joint.

Covered Electrode. A filler metal electrode, used in arc welding, consisting of a metal core wire with a relatively thick covering which provides protection for the molten metal from the atmosphere, improves the properties of the weld metal, and stabilizes the arc. Covered electrodes are extensively used in shop fabrication and field erection of piping of carbon, alloy, and stainless steels.

Crack. A fracture-type imperfection characterized by a sharp tip and high ratio of length and depth to opening displacement.

Creep or Plastic Flow of Metals. At sufficiently high temperatures, all metals flow under stress. The higher the temperature and stress, the greater the tendency to plastic flow for any given metal.

Cutting Torch. A device used in oxygen, air, or powder cutting for controlling and directing the gases used for preheating and the oxygen or powder used for cutting the metal.

Defect. A flaw or an imperfection of such size, shape, orientation, location, or properties as to be rejectable per the applicable minimum acceptance standards.[7]

Density. The density of a substance is the mass of the substance per unit volume. It may be expressed in a variety of units.

Deposited Metal. Filler metal that has been added during a welding operation.[8]

Depth of Fusion. The distance that fusion extends into the base metal from the surface melted during welding. See Fig. A1.6.

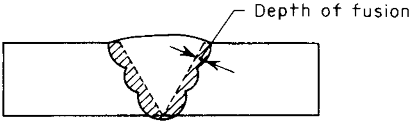

FIGURE A1.6 Depth of fusion.

Designer. Responsible for ensuring that the engineering design of piping complies with the requirements of the applicable code and standard and any additional requirements established by the owner.

Dew Point. The temperature at which the vapor condenses when it is cooled at constant pressure.

Dilatant Liquid. If the viscosity of a liquid increases as agitation is increased at constant temperature, the liquid is termed *dilatant.* Examples are clay slurries and candy compounds.

Discontinuity. A lack of continuity or cohesion; an interruption in the normal physical structure of material or a product.[7]

Double Submerged Arc-Welded Pipe. Pipe having a longitudinal butt joint produced by at least two passes, one of which is on the inside of the pipe. Coalescence is produced by heating with an electric arc or arcs between the bare metal electrode or electrodes and the work. The welding is shielded by a blanket of granular, fusible material on the work. Pressure is not used, and filler metal for the inside and outside welds is obtained from the electrode or electrodes.

Ductile Iron. A cast ferrous material in which the free graphite is in a spheroidal form rather than a fluke form. The desirable properties of ductile iron are achieved by means of chemistry and a ferritizing heat treatment of the castings.

Eddy Current Testing. This is a nondestructive testing method in which eddy current flow is induced in the test object. Changes in the flow caused by variations in the object are reflected into a nearby coil or coils for subsequent analysis by suitable instrumentation and techniques.

Edge Joint. A joint between the edges of two or more parallel or nearly parallel members.

Edge Preparation. The contour prepared on the edge of a member for welding. See Fig. A1.7.

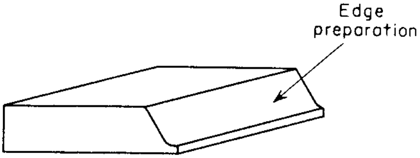

FIGURE A1.7 Edge preparation.

Electric Flash-Welded Pipe. Pipe having a longitudinal butt joint in which coalescence is produced simultaneously over the entire area of abutting surfaces by the heat obtained from resistance to the flow of electric current between the two surfaces and by the application of pressure after heating is substantially completed. Flashing and upsetting are accompanied by expulsion of metal from the joint.[4]

Electric Fusion-Welded Pipe. Pipe having a longitudinal or spiral butt joint in which coalescence is produced in the preformed tube by manual or automatic electric arc welding. The weld may be single or double and may be made with or without the use of filler metal.[4]

Electric Resistance-Welded Pipe. Pipe produced in individual lengths or in continuous lengths from coiled skelp and subsequently cut into individual lengths having a longitudinal butt joint in which coalescence is produced by the heat obtained from resistance of the pipe to the flow of electric current in a circuit of which the pipe is a part and by the application of pressure.[3]

Electrode. *See* Covered Electrode.

End Preparation. The contour prepared on the end of a pipe, fitting, or nozzle for welding. The particular preparation is prescribed by the governing code. Refer to Chap. A6 of this handbook.

Engineering Design. The detailed design developed from process requirements and conforming to established design criteria, including all necessary drawings and specifications, governing a piping installation.[5]

Equipment Connection. An integral part of such equipment as pressure vessels, heat exchangers, pumps, etc., designed for attachment of pipe or piping components.[8]

Erection. The complete installation of a piping system, including any field assembly, fabrication, testing, and inspection of the system.[5]

Erosion. Destruction of materials by the abrasive action of moving fluids, usually accelerated by the presence of solid particles.[9]

Examination. The procedures for all visual observation and nondestructive testing.[5]

Expansion Joint. A flexible piping component which absorbs thermal and/or terminal movement.[5]

Extruded Nozzles. The forming of nozzle (tee) outlets in pipe by pulling hemispherically or conically shaped dies through a circular hole from the inside of the pipe. Although some cold extruding is done, it is generally performed on steel after the area to be shaped has been heated to temperatures between 2000 and 1600°F (1093 and 871°C).

Extruded Pipe. Pipe produced from hollow or solid round forgings, usually in a hydraulic extrusion press. In this process the forging is contained in a cylindrical die. Initially a punch at the end of the extrusion plunger pierces the forging. The extrusion plunger then forces the contained billet between the cylindrical die and the punch to form the pipe, the latter acting as a mandrel.

One variation of this process utilizes autofrettage (hydraulic expansion) and heat treatment, above the recrystallization temperature of the material, to produce a wrought structure.

Fabrication. Primarily, the joining of piping components into integral pieces ready for assembly. It includes bending, forming, threading, welding, or other operations upon these components, if not part of assembly. It may be done in a shop or in the field.[5]

Face of Weld. The exposed surface of a weld on the side from which the welding was done.[5,8]

Filler Metal. Metal to be added in welding, soldering, brazing, or braze welding.[8]

Fillet Weld. A weld of an approximately triangular cross section joining two surfaces approximately at right angles to each other in a lap joint, tee joint, corner joint, or socket weld.[5] See Fig. A1.8.

Fire Hazard. Situation in which a material of more than average combustibility or explodibility exists in the presence of a potential ignition source.[5]

Flat-Land Bevel. A square extended root face preparation extensively used in inert-gas, root-pass welding of piping. See Fig. A1.9.

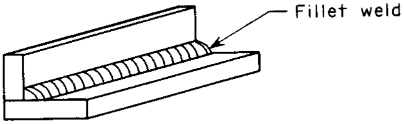

FIGURE A1.8 Fillet weld.

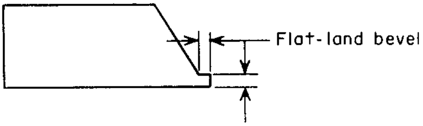

FIGURE A1.9 Flat-land bevel.

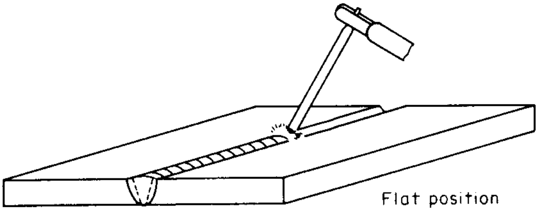

FIGURE A1.10 Welding in the flat position.

Flat Position. The position of welding which is performed from the upper side of the joint, while the face of the weld is approximately horizontal. See Fig. A1.10.

Flaw. An imperfection of unintentional discontinuity which is detectable by a nondestructive examination.[7]

Flux. Material used to dissolve, prevent accumulation of, or facilitate removal of oxides and other undesirable substances during welding, brazing, or soldering.

Flux-Cored Arc Welding (FCAW). An arc welding process that employs a continuous tubular filler metal (consumable) electrode having a core of flux for shielding. Adding shielding may or may not be obtained from an externally supplied gas or gas mixture.

Forge Weld. A method of manufacture similar to hammer welding. The term *forge welded* is applied more particularly to headers and large drums, while *hammer welded* usually refers to pipe.

Forged and Bored Pipe. Pipe produced by boring or trepanning of a forged billet.

Full-Fillet Weld. A fillet weld whose size is equal to the thickness of the thinner member joined.[8]

Fusion. The melting together of filler and base metal, or of base metal only, which results in coalescence.[8]

Fusion Zone. The area of base metal melted as determined on the cross section of a weld. See Fig. A1.11.

Galvanizing. A process by which the surface of iron or steel is covered with a layer of zinc.

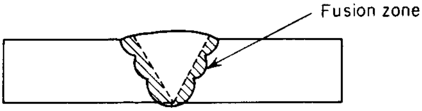

FIGURE A1.11 Fusion zone is the section of the parent metal which melts during the welding process.

Gas Metal Arc Welding (GMAW). An arc welding process that employs a continuous solid filler metal (consumable) electrode. Shielding is obtained entirely from an externally supplied gas or gas mixture.[4,8] (Some methods of this process have been called *MIG* or *CO_2* welding.)

Gas Tungsten Arc Welding (GTAW). An arc welding process that employs a tungsten (nonconsumable) electrode. Shielding is obtained from a gas or gas mixture. Pressure may or may not be used, and filler metal may or may not be used. (This process has sometimes been called *TIG* welding.) When shielding is obtained by the use of an inert gas such as helium or argon, this process is called *inert-gas tungsten arc welding.*[8]

Gas Welding. Welding process in which coalescence is produced by heating with a gas flame or flames, with or without the application of pressure and with or without the use of filler metal.[4]

Groove. The opening provided for a groove weld.

Groove Angle. The total included angle of the groove between parts to be joined by a groove weld. See Fig. A1.12.

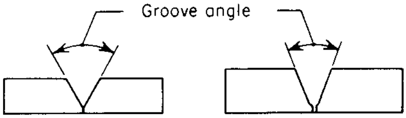

FIGURE A1.12 The groove angle is twice the bevel angle.

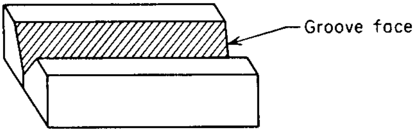

FIGURE A1.13 A groove face.

Groove Face. That surface of a member included in the groove. See Fig. A1.13.

Groove Radius. The radius of a J or U groove. See Fig. A1.14.

Groove Weld. A weld made in the groove between two members to be joined. The standard type of groove welds are square, single-V, single-bevel, single-U, single-J, double-V, double-U, double-bevel, double-J, and flat-land single, and double-V groove welds. See Fig. A1.15 for a typical groove weld.

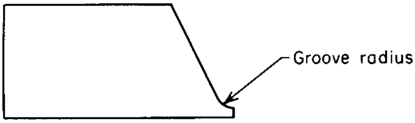

FIGURE A1.14 A groove radius.

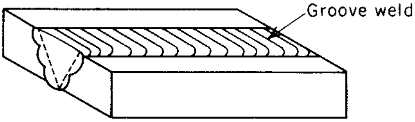

FIGURE A1.15 Groove weld.

Hammer Weld. Method of manufacturing large pipe (usually NPS 20 or DN 500 and larger) by bending a plate into circular form, heating the overlapped edges to a welding temperature, and welding the longitudinal seam with a power hammer applied to the outside of the weld while the inner side is supported on an overhung anvil.

Hangers and Supports. Hangers and supports include elements which transfer the load from the pipe or structural attachment to the supporting structure or equipment. They include hanging-type fixtures such as hanger rods, spring hangers, sway braces, counterweights, turnbuckles, struts, chains, guides, and anchors and bearing-type fixtures such as saddles, bases, rollers, brackets, and sliding supports.[5] Refer to Chap. B5 of this handbook.

Header. A pipe or fitting to which a number of branch pipes are connected.

Heat-Affected Zone. That portion of the base metal which has not been melted but whose mechanical properties or microstructure has been altered by the heat of welding or cutting.[8] See Fig. A1.16.

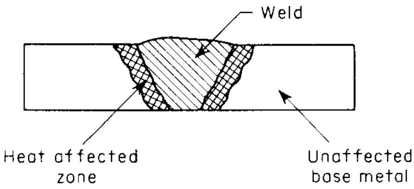

FIGURE A1.16 Welding zones.

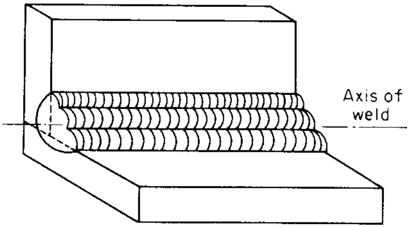

FIGURE A1.17 Horizontal position fillet weld.

Heat Fusion Joint. A joint made in thermoplastic piping by heating the parts sufficiently to permit fusion of the materials when the parts are pressed together.

Horizontal Fixed Position. In pipe welding, the position of a pipe joint in which the axis of the pipe is approximately horizontal and the pipe is not rotated during the operation.

Horizontal-Position Fillet Weld. Welding is performed on the upper side of an approximately horizontal surface and against an approximately vertical surface. See Fig. A1.17.

Horizontal-Position Groove Weld. The position of welding in which the weld axis lies in an approximately horizontal plane and the face of the weld lies in an approximately vertical plane. See Fig. A1.18.

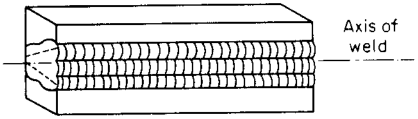

FIGURE A1.18 Horizontal position groove weld.

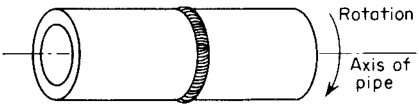

FIGURE A1.19 Horizontal rolled position.

Horizontal Rolled Position. The position of a pipe joint in which welding is performed in the flat position by rotating the pipe. See Fig. A1.19.

Hot Bending. Bending of piping to a predetermined radius after heating to a suitably high temperature for hot working. On many pipe sizes, the pipe is firmly packed with sand to avoid wrinkling and excessive out-of-roundness.

Hot Taps. Branch piping connections made to operating pipelines, mains, or other facilities while they are in operation.

Hot Working. The plastic deformation of metal at such a temperature and rate that strain hardening does not occur. Extruding or swaging of chrome-moly piping at temperatures between 2000 and 1600°F (1093 and 871°C) would be considered hot-forming or hot-working operations.

Hydraulic Radius. The ratio of area of flowing fluid to the wetted perimeter.

$$\text{Hydraulic radius} = \frac{\text{area of flowing fluid}}{\text{wetted perimeter}}$$

Impact Test. A test to determine the behavior of materials when subjected to high rates of loading, usually in bending, tension, or torsion. The quantity measured is the energy absorbed in breaking the specimen by a single blow, as in Charpy or Izod tests.

Imperfection. A condition of being imperfect; a departure of a quality characteristic from its intended condition.[5]

Incomplete Fusion. Fusion which is less than complete and which does not result in melting completely through the thickness of the joint.

Indication. The response or evidence from the application of a nondestructive examination.[5]

Induction Heating. Heat treatment of completed welds in piping by means of placing induction coils around the piping. This type of heating is usually performed during field erection in those cases where stress relief of carbon- and alloy-steel field welds is required by the applicable code.

Inspection. Activities performed by an authorized inspector to verify whether an item or activity conforms to specified requirements.

Instrument Piping. All piping, valves, and fittings used to connect instruments to main piping, to other instruments and apparatus, or to measuring equipment.[2]

Interpass Temperature. In a multiple-pass weld, the minimum or maximum temperature of the deposited weld metal before the next pass is started.

Interrupted Welding. Interruption of welding and preheat by allowing the weld area to cool to room temperature as generally permitted on carbon-steel and on chrome-moly alloy-steel piping after sufficient weld passes equal to at least one-third of the pipe wall thickness or two weld layers, whichever is greater, have been deposited.

Joint. A connection between two lengths of pipe or between a length of pipe and a fitting.

Joint Penetration. The minimum depth a groove weld extends from its face into a joint, exclusive of reinforcement.[5] See Fig. A1.20.

Kinematic Viscosity. The ratio of the absolute viscosity to the mass density. In the metric system, kinematic viscosity is measured in strokes or square centimeters per second. Refer to Chap. B8 of this handbook.

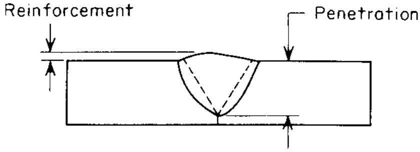

FIGURE A1.20 Weld joint penetration.

Laminar Flow. Fluid flow in a pipe is usually considered laminar if the Reynolds number is less than 2000. Depending upon many possible varying conditions, the flow may be laminar at a Reynolds number as low as 1200 or as high as 40,000; however, such conditions are not experienced in normal practice.

Lap Weld. Weld along a longitudinal seam in which one part is overlapped by the other. A term used to designate pipe made by this process.

Lapped Joint. A type of pipe joint made by using loose flanges on lengths of pipe whose ends are lapped over to give a bearing surface for a gasket or metal-to-metal joint.

Liquid Penetrant Examination or Inspection. This is a nondestructive examination method for finding discontinuities that are open to the surface of solid and essentially nonporous materials. This method is based on capillary action or capillary attraction by which the surface of a liquid in contact with a solid is elevated or depressed. A liquid penetrant, usually a red dye, is applied to the clean surface of the specimen. Time is allowed for the penetrant to seep into the opening. The excess penetrant is removed from the surface. A developer, normally white, is applied to aid in drawing the penetrant up or out to the surface. The red penetrant is drawn out of the discontinuity, which is located by the contrast and distinct appearance of the red penetrant against the white background of the developer.

Local Preheating. Preheating of a specific portion of a structure.

Local Stress-Relief Heat Treatment. Stress-relief heat treatment of a specific portion of a weldment. This is done extensively with induction coils, resistance coils, or propane torches in the field erection of steel piping.

Machine Welding. Welding with equipment which performs the welding operation under the observation and control of an operator. The equipment may or may not perform the loading and unloading of the work.

Magnetic Particle Examination or Inspection. This is a nondestructive examination method to locate surface and subsurface discontinuities in ferromagnetic materials. The presence of discontinuities is detected by the use of finely divided ferromagnetic particles applied over the surface. Some of these magnetic particles are gathered and held by the magnetic leakage field created by the discontinuity. The particles gathered at the surface form an outline of the discontinuity and generally indicate its location, size, shape, and extent.

Malleable Iron. Cast iron which has been heat-treated in an oven to relieve its brittleness. The process somewhat improves the tensile strength and enables the material to stretch to a limited extent without breaking.

Manual Welding. Welding wherein the entire welding operation is performed and controlled by hand.[5]

Mean Velocity of Flow. Under steady state of flow, the mean velocity of flow at a given cross section of pipe is equal to the rate of flow Q divided by the area of cross section A. It is expressed in feet per second or meters per second.

$$v = \frac{Q}{A} \tag{A1.1}$$

where v = mean velocity of flow, in feet per second, ft/s (meters per second, m/s)
Q = rate of flow, in cubic feet per second, ft^3/s (cubic meters per second, m^3/s)
A = area of cross section, in square feet, ft^2 (square meters, m^2)

Mechanical Joint. A joint for the purpose of mechanical strength or leak resistance or both, where the mechanical strength is developed by threaded, grooved, rolled, flared, or flanged pipe ends or by bolts, pins, and compounds, gaskets, rolled ends, caulking, or machined and mated surfaces. These joints have particular application where ease of disassembly is desired.[5]

Mill Length. Also known as random length. The usual run-of-mill pipe is 16 to 20 ft (5 to 6 m) in length. Line pipe and pipe for power plant use are sometimes made in double lengths of 30 to 35 ft (10 to 12 m).

Miter. Two or more straight sections of pipe matched and joined on a line bisecting the angle of junction so as to produce a change in direction.[4]

Newtonian Liquid. A liquid is called newtonian if its viscosity is unaffected by the kind and magnitude of motion or agitation to which it may be subjected, as long as the temperature remains constant. Water and mineral oil are examples of newtonian liquids.

Nipple. A piece of pipe less than 12 in (0.3 m) long that may be threaded on both ends or on one end and provided with ends suitable for welding or a mechanical joint. Pipe over 12 in (0.3 m) long is regarded as cut pipe. Common types of nipples are close nipple, about twice the length of a standard pipe thread and without any shoulder; shoulder nipple, of any length and having a shoulder between the pipe threads; short nipple, a shoulder nipple slightly longer than a close nipple and of a definite length for each pipe size which conforms to manufacturer' standard; long nipple, a shoulder nipple longer than a short nipple which is cut to a specific length.

Nominal Diameter (DN). A dimensionless designator of pipe in metric system. It indicates standard pipe size when followed by the specific size designation number without the millimeter symbol (for example, DN 40, DN 300).

Nominal Pipe Size (NPS). A dimensionless designator of pipe. It indicates standard pipe size when followed by the specific size designation number without an inch symbol (for example, NPS 1½, NPS 12).[2]

Nominal Thickness. The thickness given in the product material specification or standard to which manufacturing tolerances are applied.[5]

Nondestructive Examination or Inspection. Inspection by methods that do not destroy the item, part, or component to determine its suitability for use.

Normalizing. A process in which a ferrous metal is heated to a suitable temperature above the transformation range and is subsequently cooled in still air at room temperature.[5]

Nozzle. As applied to piping, this term usually refers to a flanged connection on a boiler, tank, or manifold consisting of a pipe flange, a short neck, and a welded attachment to the boiler or other vessel. A short length of pipe, one end of which is welded to the vessel with the other end chamfered for butt welding, is also referred to as a welding nozzle.

Overhead Position. The position of welding performed from the underside of the joint.

Oxidizing Flame. An oxyfuel gas flame having an oxidizing effect caused by excess oxygen.

Oxyacetylene Cutting. An oxygen-cutting process in which metals are severed by the chemical reaction of oxygen with the base metal at elevated temperatures. The necessary temperature is maintained by means of gas flames obtained from the combustion of acetylene with oxygen.

Oxyacetylene Welding. A gas welding process in which coalescence is produced by heating with a gas flame or flames obtained from the combustion of acetylene with oxygen, with or without the addition of filler metal.

Oxyfuel Gas Welding (OFGW). A group of welding processes in which coalescence is produced by heating with a flame or flames obtained from the combustion of fuel gas with oxygen, with or without the application of pressure and with or without the use of filler metal.

Oxygen Cutting (OC). A group of cutting processes used to sever or remove metals by means of the reaction of oxygen with the base metal at elevated temperatures. In the case of oxidation-resistant metals, the reaction is facilitated by use of a chemical flux or metal powder.[8]

Oxygen Gouging. An application of oxygen cutting in which a chamfer or groove is formed.

Pass. A single progression of a welding or surfacing operation along a joint, weld deposit, or substrate. The result of a pass is a weld bead, layer, or spray deposit.[8]

Peel Test. A destructive method of examination that mechanically separates a lap joint by peeling.[8]

Peening. The mechanical working of metals by means of hammer blows.

Pickle. The chemical or electrochemical removal of surface oxides. Following welding operations, piping is frequently *pickled* in order to remove mill scale, oxides formed during storage, and the weld discolorations.

Pipe. A tube with a round cross section conforming to the dimensional requirements for nominal pipe size as tabulated in ASME B36.10M and ASME B36.19M. For special pipe having diameter not listed in the above-mentioned standards, the nominal diameter corresponds to the outside diameter.[5]

Pipe Alignment Guide. A restraint in the form of a sleeve or frame that permits the pipeline to move freely only along the axis of the pipe.[8]

Pipe Supporting Fixtures. Elements that transfer the load from the pipe or structural attachment to the support structure or equipment.[8]

Pipeline or Transmission Line. A pipe installed for the purpose of transmitting gases, liquids, slurries, etc., from a source or sources of supply to one or more distribution centers or to one or more large-volume customers; a pipe installed to interconnect source or sources of supply to one or more distribution centers or to one or more large-volume customers; or a pipe installed to interconnect sources of supply.[2]

Piping System. Interconnected piping subject to the same set or sets of design conditions.[1]

Plasma Cutting. A group of cutting processes in which the severing or removal of metals is effected by melting with a stream of hot ionized gas.[1]

Plastic. A material which contains as an essential ingredient an organic substance of high to ultrahigh molecular weight, is solid in its finished state, and at some stage of its manufacture or processing can be shaped by flow. The two general types of plastic are thermoplastic and thermosetting.

Polarity. The direction of flow of current with respect to the welding electrode and workpiece.

Porosity. Presence of gas pockets or voids in metal.

Positioning Weld. A weld made in a joint which has been so placed as to facilitate the making of the weld.

Postheating. The application of heat to a fabricated or welded section subsequent to a fabrication, welding, or cutting operation. Postheating may be done locally, as by induction heating; or the entire assembly may be postheated in a furnace.

Postweld Heat Treatment. Any heat treatment subsequent to welding.[5]

Preheating. The application of heat to a base metal immediately prior to a welding or cutting operation.[5]

Pressure. The force per unit that is acting on a real or imaginary surface within a fluid is the pressure or intensity of pressure. It is expressed in pounds per square inch:

$$p = 144 \cdot w \cdot h + p_a \tag{A1.2}$$

$$p = 10^4 w \cdot h + p_a \tag{A1.2M}$$

where p = absolute pressure at a point, psi (kg/cm^2)
w = specific weight, lb/ft^3 (kg/m^3)
h = height of fluid column above the point, ft (m)
p_a = atmospheric pressure, psi (kg/cm^2)

The gauge pressure at a point is obtained by designating atmospheric pressure as zero:

$$p = 144 \cdot w \cdot h \tag{A1.3}$$

$$p = 10^4(w \cdot h) \quad \text{(metric)} \tag{A1.3M}$$

where p = gauge pressure. To obtain absolute pressure from gauge pressure, add the atmospheric pressure to the gauge pressure.

Pressure Head. From the definition of pressure, the expression p/w is the pressure head. It can be defined as the height of the fluid above a point, and it is normally measured in feet.

Purging. The displacement during welding, by an inert or neutral gas, of the air inside the piping underneath the weld area in order to avoid oxidation or contamination of the underside of the weld. Gases most commonly used are argon, helium, and nitrogen (the last is principally limited to austenitic stainless steel). Purging can be done within a complete pipe section or by means of purging fixtures of a small area underneath the pipe weld.

Quenching. Rapid cooling of a heated metal.

Radiographic Examination or Inspection. Radiography is a nondestructive test method which makes use of short-wavelength radiations, such as X-rays or gamma rays, to penetrate objects for detecting the presence and nature of macroscopic defects or other structural discontinuities. The shadow image of defects or discontinuities is recorded either on a fluorescent screen or on photographic film.

Reinforcement. In branch connections, reinforcement is material around a branch opening that serves to strengthen it. The material is either integral in the branch components or added in the form of weld metal, a pad, a saddle, or a sleeve. In welding, reinforcement is weld metal in excess of the specified weld size.

Reinforcement Weld. Weld metal on the face of a groove weld in excess of the metal necessary for the specified weld size.[5]

Repair. The process of physically restoring a nonconformance to a condition such that an item complies with the applicable requirements, including the code requirements.[6]

Resistance Weld. Method of manufacturing pipe by bending a plate into circular form and passing electric current through the material to obtain a welding temperature.

Restraint. A structural attachment, device, or mechanism that limits movement of the pipe in one or more directions.[8]

Reverse Polarity. The arrangement of direct-current arc welding leads with the work as the negative pole and the electrode as the positive pole of the welding arc; a synonym for direct-current electrode positive.[8]

Reynolds Number. A dimensionless number. It is defined as the ratio of the dynamic forces of mass flow to the shear stress due to viscosity. It is expressed as

$$R = \frac{Dv\rho}{\mu} \tag{A1.4}$$

where R = Reynolds number
v = mean velocity of flow, ft/s (m/s)
ρ = weight density of fluid, lb/ft^3 (kg/m^3)
D = internal diameter of pipe, ft (m)
μ = absolute viscosity, in pound mass per foot second [lbm/(ft · s)] or poundal seconds per square foot (centipoise)

Rolled Pipe. Pipe produced from a forged billet which is pierced by a conical mandrel between two diametrically opposed rolls. The pierced shell is subsequently rolled and expanded over mandrels of increasingly large diameter. Where closer dimensional tolerances are desired, the rolled pipe is cold- or hot-drawn through dies and then machined. One variation of this process produces the hollow shell by extrusion of the forged billet over a mandrel in a vertical, hydraulic piercing press.

Root Edge. A root face of zero width.

Root Face. That portion of the groove face adjacent to the root of the joint. This portion is also referred to as the *root land*. See Fig. A1.21.

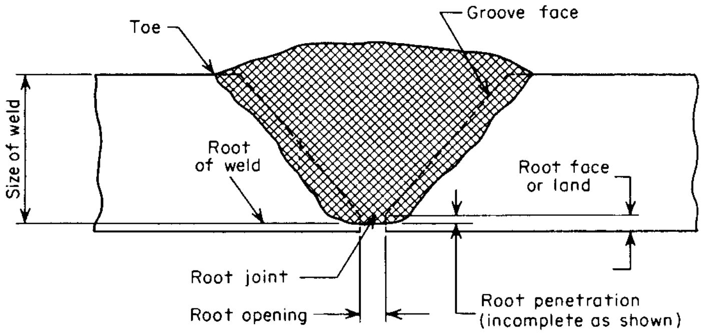

FIGURE A1.21 Nomenclature at joint of groove weld.

Root of Joint. That portion of a joint to be welded where the members to be joined come closest to each other. In cross section, the root of a joint may be a point, a line, or an area. See Fig. A1.21.

Root Opening. The separation, between the members to be joined, at the root of the joint.[5] See Fig. A1.21.

Root Penetration. The depth which a groove weld extends into the root of a joint as measured on the centerline of the root cross section. Sometimes welds are considered unacceptable if they show incomplete penetration. See Fig. A1.21.

Root Reinforcement. Weld reinforcement at the side other than that from which the welding was done.

Root Surface. The exposed surface of a weld on the side other than that from which the welding was done.

Run. The portion of a fitting having its end in line, or nearly so, as distinguished from branch connections, side outlets, etc.

Saddle Flange. Also known as *tank flange* or *boiler flange.* A curved flange shaped to fit a boiler, tank, or other vessel and to receive a threaded pipe. A saddle flange is usually riveted or welded to the vessel.

Sample Piping. All piping, valves, and fittings used for the collection of samples of gas, steam, water, oil, etc.[2]

Sargol. A special type of joint in which a lip is provided for welding to make the joint fluid tight, while mechanical strength is provided by bolted flanges. The Sargol joint is used with both Van Stone pipe and fittings.

Sarlun. An improved type of Sargol joint.

Schedule Numbers. Approximate values of the expression $1000P/S$, where P is the service pressure and S is the allowable stress, both expressed in pounds per square inch.

Seal Weld. A fillet weld used on a pipe joint primarily to obtain fluid tightness as opposed to mechanical strength; usually used in conjunction with a threaded joint.[8]

Seamless Pipe. A wrought tubular product made without a welded seam. It is manufactured by hot-working steel or, if necessary, by subsequently cold-finishing the hot-worked tubular product to produce the desired shape, dimensions, and properties.

Semiautomatic Arc Welding. Arc welding with equipment which controls only the filler metal feed. The advance of the welding is manually controlled.[3]

Semisteel. A high grade of cast iron made by the addition of steel scrap to pip iron in a cupola or electric furnace. More correctly described as *high-strength gray iron.*

Service Fitting. A street ell or street tee having a male thread at one end.

Shielded Metal Arc Welding (SMAW). An arc welding process in which coalescence is produced by heating with an electric arc between a covered metal electrode and the work. Shielding is obtained from decomposition of the electrode covering. Pressure is not used, and filler metal is obtained from the electrode.[8]

Shot Blasting. Mechanical removal of surface oxides and scale on the pipe inner and outer surfaces by the abrasive impingement of small steel pellets.

Single-Bevel-, Single-J, Single-U, Single-V-Groove Welds. All are specific types of groove welds and are illustrated in Fig. A1.22.

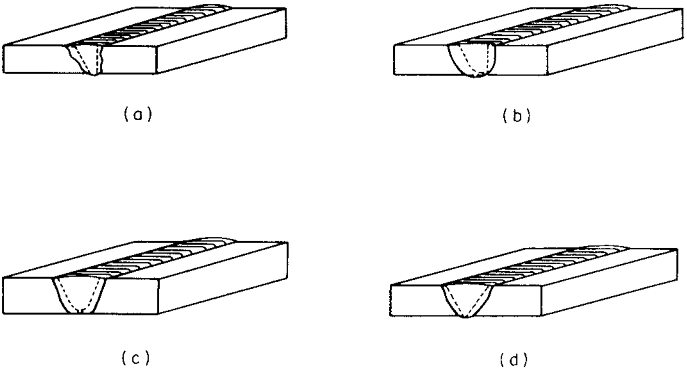

FIGURE A1.22 Groove welds. (*a*) Single-bevel; (*b*) single-J; (*c*) double-U; (*d*) double-V.

Single-Welded Butt Joint. A butt joint welded from one side only.[8]

Size of Weld. For a groove weld, the joint penetration, which is the depth of chamfering plus the root penetration. See Fig. A1.21. For fillet welds, the leg length of the largest isosceles right triangle which can be inscribed within the fillet-weld cross section. See Fig. A1.23.

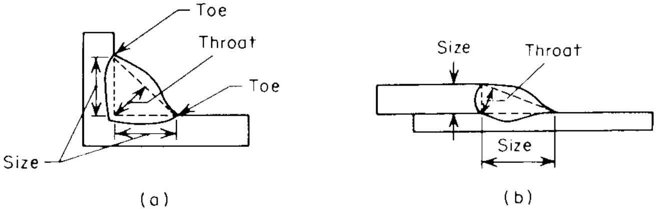

FIGURE A1.23 Size of weld (*a*) in fillet weld of equal legs and (*b*) in fillet weld of unequal legs.

Skelp. A piece of plate prepared by forming and bending, ready for welding into pipe. Flat plates when used for butt-welded pipe are called *skelp.*

Slag Inclusion. Nonmetallic solid material entrapped in weld metal or between weld metal.[8]

Slurry. A two-phase mixture of solid particles in an aqueous phase.[9]

Socket Weld. Fillet-type seal weld used to join pipe to valves and fittings or to other sections of pipe. Generally used for piping whose nominal diameter is NPS 2 (DN 50) or smaller.

Soldering. A metal-joining process in which coalescence is produced by heating to a suitable temperature and by using a nonferrous alloy fusible at temperatures below that of the base metals being joined. The filler metal is distributed between closely fitted surfaces of the joint by capillary action.[5]

Solution Heat Treatment. Heating an alloy to a suitable temperature, holding at that temperature long enough to allow one or more constituents to enter into solid solution, and then cooling rapidly enough to hold the constituents in solution.

Solvent Cement Joint. A joint made in thermoplastic piping by the use of a solvent or solvent cement which forms a continuous bond between the mating surfaces.

Source Nipple. A short length of heavy-walled pipe between high-pressure mains and the first valve of bypass, drain, or instrument connections.

Spatter. In arc and gas welding, the metal particles expelled during welding that do not form part of the weld.[8]

Spatter Loss. Difference in weight between the amount of electrode consumed and the amount of electrode deposited.

Specific Gravity. The ratio of its weight to the weight of an equal volume of water at standard conditions.

Specific Volume. The volume of a unit mass of a fluid is its specific volume, and it is measured in cubic feet per pound mass (ft^3/lbm).

Specific Weight. The weight of a unit volume of a fluid is its specific weight. In English units, it is expressed in pounds per cubic foot (lb/ft^3).

Spiral-Riveted. A method of manufacturing pipe by coiling a plate into a helix and riveting together the overlapped edges.

Spiral-Welded. A method of manufacturing pipe by coiling a plate into a helix and fusion-welding the overlapped or abutted edges.

Spiral-Welded Pipe. Pipe made by the electric-fusion-welded process with a butt joint, a lap joint, or a lock-seam joint.

Square-Groove Weld. A groove weld in which the pipe ends are not chamfered. Square-groove welds are generally used on piping and tubing of wall thickness no greater than ⅛ in (3 mm).

Stainless Steel. An alloy steel having unusual corrosion-resisting properties, usually imparted by nickel and chromium.

Standard Dimension Ratio (SDR). The ratio of outside pipe diameter to wall thickness of thermoplastic pipe. It is calculated by dividing the specified outside diameter of the pipe by the specified wall thickness in inches.

Statically Cast Pipe. Pipe formed by the solidification of molten metal in a sand mold.

Straight Polarity. The arrangement of direct-current arc welding leads in which the work is the positive pole and the electrode is the negative pole of the welding arc; a synonym for *direct-current electrode negative.*

Stress Relieving. Uniform heating of a structure or portion thereof to a sufficient temperature to relieve the major portion of the residual stresses, followed by uniform cooling.[5]

Stringer Bead. A type of weld bead made by moving the electrode in a direction essentially parallel to the axis of the bead. There is no appreciable transverse oscillation of the electrode. The deposition of a number of string beads is known as *string beading* and is used extensively in the welding of austenitic stainless-steel materials. *See also* Weave Bead.

Structural Attachments. Brackets, clips, lugs, or other elements welded, bolted, or clamped to the pipe support structures, such as stanchions, towers, building frames, and foundation. Equipment such as vessels, exchangers, and pumps is not considered to be pipe-supporting elements.

Submerged Arc Welding (SAW). An arc welding process that produces coalescence of metals by heating them with an arc or arcs drawn between a bare metal electrode or electrodes and the base metals. The arc is shielded by a blanket of granular fusible material. Pressure is not used, and filler metal is obtained from the electrode and sometimes from a supplementary welding rod, flux, or metal granules.

Supplemental Steel. Structural members that frame between existing building framing steel members and are significantly smaller than the existing steel.[8]

Swaging. Reducing the ends of pipe and tube sections with rotating dies which are pressed intermittently against the pipe or tube end.

Swivel Joint. A joint which permits single-plane rotational movement in a piping system.

Tack Weld. A small weld made to hold parts of a weldment in proper alignment until the final welds are made.

Tee Joint. A welded joint between two members located approximately at right angles to each other in the form of a T.

Tempering. A process of heating a normalized or quench-hardened steel to a temperature below the transformation range and, from there, cooling at any rate desired. This operation is also frequently called *stress relieving.*

Testing. An element of verification for the determination of the capability of an item to meet specified requirements by subjecting the item to a set of physical, chemical, environmental, or operating conditions.[6]

Thermoplastic. A plastic which is capable of being repeatedly softened by increase of temperature and hardened by decrease of temperature.[2] Refer to Chap. D1 of this handbook.

Thermosetting Plastic. Plastic which is capable of being changed into a substantially infusible or insoluble product when cured under application of heat or chemical means.[2] Refer to Chap. D2 of this handbook.

Thixotropic Liquid. If the viscosity of a liquid decreases as agitation is increased at constant temperature, the liquid is called *thixotropic.* Examples include glues, greases, paints, etc.

Throat of a Weld. A term applied to fillet welds. It is the perpendicular distance from the beginning of the root of a joint to the hypotenuse of the largest right triangle that can be inscribed within the fillet-weld cross section. See Fig. A1.23.

Toe of Weld. The junction between the face of a weld and the base metal.[8] See Fig. A1.23.

Transformation Range. A temperature range in which a phase change is initiated and completed.

Transformation Temperature. A temperature at which a phase change occurs.

Trepanning. The removal by destructive means of a small section of piping (usually containing a weld) for an evaluation of weld and base-metal soundness. The operation is frequently performed with a hole saw.

Tube. A hollow product of round or any other cross section having a continuous periphery. Round tube size may be specified with respect to any two, but not all three, of the following: outside diameter, inside diameter, and wall thickness. Dimensions and permissible variations (tolerances) are specified in the appropriate ASTM or ASME specifications.

Turbinizing. Mechanical removal of scale from the inside of the pipe by means of air-driven centrifugal rotating cleaners. The operation is performed on steel pipe bends after hot bending to remove loose scale and sand.

Turbulent Flow. Fluid flow in a pipe is usually considered turbulent if the Reynolds number is greater than 4000. Fluid flow with a Reynolds number between 2000 and 4000 is considered to be in ‘‘transition.’’

Ultrasonic Examination or Inspection. A nondestructive method in which beams of high-frequency sound waves that are introduced into the material being inspected are used to detect surface and subsurface flaws. The sound waves travel through the material with some attendant loss of energy and are reflected at interfaces. The reflected beam is detected and analyzed to define the presence and location of flaws.

Underbead Crack. A crack in the heat-affected zone or in previously deposited weld metal paralleling the underside contour of the deposited weld bead and usually not extending to the surface.

Undercut. A groove melted into the base material adjacent to the toe or root of a weld and left unfilled by weld material.[8]

Van Stoning. Hot upsetting of lapping pipe ends to form integral lap flanges, the lap generally being of the same diameter as that of the raised face of standard flanges.

Vapor Pressure. The pressure exerted by the gaseous form, or vapor, of liquid. When the pressure above a liquid equals its vapor pressure, boiling occurs. If the pressure at any point in the flow of a liquid falls below the vapor pressure or becomes equal to the vapor pressure, the liquid flashes into vapor. This is called *cavitation.* The vapor thus formed travels with the liquid and collapses where the pressure is greater than vapor pressure. This could cause damage to piping and other components.

Vertical Position. With respect to pipe welding, the position in which the axis of the pipe is vertical, with the welding being performed in the horizontal position. The pipe may or may not be rotated.

Viscosity. In flowing liquids, the internal friction or the internal resistance to relative motion of the fluid particles with respect to one another.

Weave Bead. A type of weld bead made with oscillation of the electrode transverse to the axis of the weld. Contrast to string bead.

Weld. A localized coalescence of material produced either by heating to suitable temperatures, with or without the application of pressure, or by application of pressure alone, with or without the use of filler material.

Weld Bead. A weld deposit resulting from a pass.

Weld Metal. That portion of a weld which has been melted during welding. The portion may be the filler metal or base metal or both.

Weld Metal Area. The area of the weld metal as measured on the cross section of a weld.

Weld Penetration. *See* Joint Penetration *and* Root Penetration.

Weld-Prober Sawing. Removal of a boat-shaped sample from a pipe weld for examination of the weld and its adjacent base-metal area. This operation is usually performed in graphitization studies.

Weld Reinforcement. Weld material in excess of the specified weld size.

Weldability. The ability of a metal to be welded under the fabrication conditions imposed into a specific, suitably designed structure and to perform satisfactorily in the intended service.

Welded Joint. A localized union of two or more members produced by the application of a welding process.

Welder. One who is capable of performing a manual or semiautomatic welding operation.[8]

Welder Performance Qualification. Demonstration of a welder's ability to produce welds in a manner described in a welding procedure specification that meets prescribed standards.

Welding Current. The current which flows through the electric welding circuit during the making of a weld.

Welding Fittings. Wrought- or forged-steel elbows, tees, reducers, and similar pieces for connection by welding to one another or to pipe. In small sizes, these fittings are available with counterbored ends for connection to pipe by fillet welding and are known as *socket-weld* fittings. In large sizes, the fittings are supplied with ends chamfered for connection to pipe by means of butt welding and are known as *butt-welding* fittings.

Welding Generator. The electric generator used for supplying welding current.

Welding Machine. Equipment used to perform the welding operation.

Welding Operator. One who operates a welding machine or automatic welding equipment.[8]

Welding Procedure. The detailed methods and practices involved in the production of a weldment.[1]

Welding Procedure Qualification Record. Record of welding data and test results of the welding procedure qualifications, including essential variables of the process and the test results.

Welding Procedure Specification (WPS). The document which lists the parameters to be used in construction of weldments in accordance with the applicable code requirements.[1]

Welding Rod. Filler metal, in wire or rod form, used in gas welding and brazing procedures and those arc welding processes where the electrode does not furnish the filler metal.

Welding Sequence. The order of making the welds in a weldment.

Weldment. An assembly whose component parts are to be joined by welding.[5]

Wrought Iron. Iron refined in a plastic state in a puddling furnace. It is characterized by the presence of about 3 percent of slag irregularly mixed with pure iron and about 0.5 percent carbon and other elements in solution.

Wrought Pipe. The term *wrought pipe* refers to both wrought steel and wrought iron. Wrought in this sense means "worked," as in the process of forming furnace-welded pipe from skelp or seamless pipe from plates or billets. The expression *wrought pipe* is thus used as a distinction from cast pipe. Wrought pipe in this sense should not be confused with *wrought-iron pipe,* which is only one variety of wrought pipe. When wrought-iron pipe is referred to, it should be designated by its complete name.

FORCES, MOMENTS, AND EQUILIBRIUM

Simple Forces. When two or more forces act upon a body at one point, they may be single or combined into a resultant force. Conversely, any force may be resolved

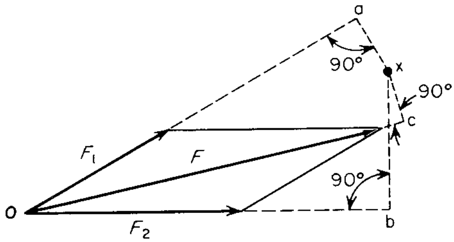

FIGURE A1.24 Vectors and moments.

into component forces. In Fig. A1.24, let the vectors F_1 and F_2 represent two forces acting on a point O. The resultant force F is represented in direction and magnitude by the diagonal of the parallelogram of which F_1 and F_2 are the sides. Conversely, any force F may be resolved into component forces by a reverse of the above operation.

Moments. The moment of a force with respect to a given point is the tendency of that force to produce rotation around it. The magnitude of the moment is represented by the product of the force and the perpendicular distance from its line of action to the point or center of moment. In the English system of weights and measures, moments are expressed as the product of the force in pounds and the length of the moment arm in feet or inches, the unit of the moment being termed the *pound-foot* or the *pound-inch.* Moments acting in a clockwise direction are designated as positive, and those acting in a counterclockwise direction are negative. They may be added and subtracted algebraically, as moments, regardless of the direction of the forces themselves.

With respect to Fig. A1.24, moments about an arbitrary point x are calculated as follows: Extend the line of action of F_1 until its extension intersects the perpendicular ax drawn from point x. Draw bx from x perpendicular to F_2. The sum of moments about point x due to the two forces is then

$$\sum M_x = F_1 \times ax - F_2 \times bx$$

Alternatively, since F_1 and F_2 have been shown to be the vector equivalent of the resultant F, the moments about x can be calculated as

$$\sum M_x = F \times cx \tag{A1.5}$$

Couples. Two parallel forces of equal magnitude acting in opposite directions constitute a couple. The moment of the couple is the product of one of the forces and the perpendicular distance between the two. A couple has no single resultant and can be balanced only by another couple of equal moment of opposite sign.

Law of Equilibrium. When a body is at rest, the external forces acting upon it must be in equilibrium and there must be a zero net moment on the body. This means that (1) the algebraic sums of the components of all forces with reference to any three axes of reference at right angles with one another must each be zero and (2) the algebraic sum of all moments with reference to any three such axes must be zero. When the forces all lie in the same plane, the algebraic sums of their components with respect to any two axes must be equal to zero and the algebraic sum of all moments with respect to any point in the plane must be zero.

WORK, POWER, AND ENERGY

Work. When a body is moved against a resistance, work must be done upon the body. The amount of work done is the product of the force and the distance through which it acts. The unit of work in the English system is the foot-pound, which is the amount of work done by a force of 1 lb acting through a distance of 1 ft. The following symbols are used in this section in defining the interrelation of work, power, and energy:

A = area, in^2 or ft^2 (mm^2 or m^2) as noted
F = force, lbf (newton, N)
g = local acceleration of gravity, ft/s^2 ($9 \cdot 81$ m/s^2)
g_c = conversion constant, ft · lbf/(lbm · s^2) [m · kgf/(kgm · s^2)]
h = vertical distance, ft (m)
H = enthalpy, Btu (gram · cal)
hp = horsepower (J/s, kW)
kW = kilowatts
KE = kinetic energy, ft · lbf (m · kgf)
PE = potential energy, ft · lbf (m · kgf)
p = pressure, psi (kPa, kg/cm^2)
l = distance, ft (m)
T = time, s
v = velocity, ft/s (m/s)
V = volume, ft^3 (m^3)
w = weight, lb (kg)
W = work, ft · lb (m · kg)

According to the above definition of work, the following expressions may be written to represent work:

$$W = \int F\,dl = \int \frac{w}{g_c} g\,dh = \int pA\,dl = \int p\,dV$$

If the force is independent of distance, if the process takes place at sea level, if pressure and area are independent of distance, and if pressure is independent of volume, respectively, the above expressions reduce to

$$W = F(l_2 - l_1) = w(h_2 - h_1) = pA(l_2 - l_1) = p(V_2 - V_1) \qquad \text{(A1.6)}$$

where the subscripts 2 and 1 refer to final and initial states, respectively. The above expressions contain no term involving time, since the measure of work is independent of the time interval during which it is performed.

Power. Power is the time rate of performing work. The English unit of power is the horsepower, which is defined at 33,000 ft · lb/min or 550 ft · lb/s. Electric power is commonly expressed in watts or kilowatts, 1 kW being equivalent to 1.34 hp and

1 hp to 0.746 kW. The expressions for horsepower corresponding to those given above for work are

$$\text{hp} = \frac{W}{550T} = \frac{Fl}{550T} \quad \text{etc.}$$

Electric power is the product of volts and amperes, i.e.,

$$\text{kW} = \frac{\text{volts} \times \text{amperes}}{1000}$$

The above expression for the determination of electric power is strictly true for direct current and for alternating current with a zero power factor. For the latter case, if the power factor is different from zero, the expression becomes

$$\text{kW} = \frac{\text{volts} \times \text{amperes}}{1000} \times \text{power factor} \tag{A1.7}$$

Energy. Energy is the capacity for doing work possessed by a system through virtue of work having previously been done upon it. Whenever work has been done upon a system in producing a *change* in its *motion,* its *position,* or its *molecular condition,* the system has acquired the capacity for doing work. Energy may be that due to motion, termed *kinetic energy;* that due to position, termed *potential energy;* or that due to molecular activity or configuration and is manifest as a change in its internal or stored energy. These three forms of energy are mutually convertible. In the English system, the units of energy are the foot-pound and the Btu, which are related by the fact that 1 Btu is equivalent to 778 ft·lb. Some of the more common expressions for energy are as follows:

1. The potential energy of a body of weight w lb mass which has been raised h ft against gravity is PE $= (wg/g_c)h$.
2. The kinetic energy possessed by a body of weight w lb mass moving at a velocity v ft/s is KE $= wv^2/(2g_c)$.
3. If the body of 1, initially at rest, were to fall freely through the distance h, its potential energy would be converted to kinetic energy and it would acquire a velocity v determined as follows:

$$\text{PE} = wh = \text{KE} = wv^2/2g_c$$

$$\text{hence} \quad wh = wv^2/2h \qquad \text{and} \qquad v = \sqrt{2g_c h}$$

4. The energy, resulting from its temperature, of a gas in motion is measured by its specific enthalpy h with units of Btu per pound mass. This energy is available for conversion to kinetic energy, as given by

$$\Delta H = \Delta \text{KE}$$

$$w\Delta h = \frac{w}{778 \times 2g_c}(v_2{}^2 - v_1{}^2)$$

If the initial velocity v_1 is negligible, there is obtained

$$v_2 = 223.7\sqrt{\Delta h}$$

5. Energy is measured in the English system in horsepower-hours, kilowatthours, Btu, and foot-pounds. The relations among these units are as follows:

$$1\ \text{hp}\cdot\text{h} = 0.746\ \text{kWh} = 2546\ \text{Btu} = 1{,}980{,}788\ \text{ft}\cdot\text{lb}$$

$$1\ \text{kWh} = 1.34\ \text{hp}\cdot\text{h} = 3412\ \text{Btu} = 2{,}654{,}536\ \text{ft}\cdot\text{lb}$$

HEAT AND TEMPERATURE

Units of Heat. The unit of heat commonly used in the English system is the British thermal unit, or Btu, and is approximately equal to the quantity of heat that must be transferred to one pound of water in order that its temperature be raised one degree Fahrenheit. In laboratory work and throughout much of the world, the calorie is the common unit of heat. A gram calorie is the approximate quantity of heat that must be transferred to 1 gram (g) of water in order to raise its temperature by 1°C. The kilocalorie, sometimes called the kilogram calorie, is equal to 1000 gram calories.

The definitions above are indicated as being approximate because, over the temperature range from freezing to boiling points of water, different quantities of heat are required to produce a unit temperature change. For this reason, the calorie and the Btu have been defined in international units as

$$1\ \text{IT calorie (cal)} = 1/860\ \text{international watthour (Wh)}$$

$$\text{IT} = \text{INTERNATIONAL TABLE}$$

$$1\ \text{Btu} = 251.996\ \text{IT cal}$$

In most engineering work, it is sufficiently accurate to use 1 $\text{kg}\cdot\text{cal} = 3.968$ Btu and 1 Btu $= 0.252\ \text{kg}\cdot\text{cal}$.

Units of Temperature. The relative "hotness" or "coldness" of a body is denoted by the term *temperature.* The temperature of a substance is measured by noting its effect upon a thermometer or pyrometer whose thermal properties are known. The mercury thermometer is suitable for measuring temperatures from −39 to about 600°F. This limit may be extended to 1000°F if the capillary tube above the mercury is filled with nitrogen or carbon dioxide under pressure. High temperatures must be measured with thermocouples or optical pyrometers. The most commonly used thermometer scales are the Fahrenheit and the Celsius. Thermometer scales have as their bases the melting and boiling points of water, both measured at atmospheric pressure. The relation of the Fahrenheit and Celsius scales is as follows:

	Absolute zero	Freezing point of water	Boiling point of water
Degrees Fahrenheit	−459.6	32	212
Degrees Celsius	−273	0	100

The relation between the two scales is

$$^\circ\text{C} = \frac{5}{9}(^\circ\text{F} - 32) \qquad \text{and} \qquad ^\circ\text{F} = \frac{9}{5}{}^\circ\text{C} + 32$$

in which C is the reading on the Celsius scale and F is the reading on the Fahrenheit scale.

In certain calculations, it is necessary to express the temperature in "absolute" units. The absolute temperature associated with the Fahrenheit scale is called the *Rankine temperature,* and that associated with the Celsius scale is termed the *Kelvin temperature.* The relationships among these scales are as follows:

$$\mathrm{R} = {}^\circ\mathrm{F} + 459.6$$

$$\mathrm{K} = {}^\circ\mathrm{C} + 273$$

$$\mathrm{R} = 1.8\mathrm{K}$$

$$\mathrm{K} = \frac{5}{9}\mathrm{R}$$

where R and K designate absolute temperatures on the Rankine and Kelvin scales, respectively.

Specific Heat. The specific heat of a substance is the quantity of heat required to produce a unit temperature change in a unit mass of that substance. Typical units are calories per gram per degree Celsius and Btu per pound per degree Fahrenheit. The numerical value of specific heat is a function of the process by which the unit temperature change is effected. If a gas expands at constant pressure owing to the addition of heat, work is done by the walls of the containing vessel on the surrounding atmosphere, and the heat addition must be greater than would have been required to cause the same temperature change at constant volume. The two most frequently used specific heats are those at constant volume and constant pressure, and they are represented symbolically as c_v and c_p, respectively.

The definition of specific heat given in the preceding paragraph is convenient for engineering applications. By thermodynamic analysis, it can be shown that the two specific heats referred to are given by

$$c_v = \left(\frac{\partial u}{\partial T}\right)_v$$

$$c_p = \left(\frac{\partial h}{\partial T}\right)_p$$

where u and h represent internal energy and enthalpy, respectively, and v and p indicate that volume or pressure remains constant during the measurement of the corresponding specific heat.

The specific heats of most substances vary with temperature. For a general functional relationship, the mean value of specific heat over a temperature range from T_1 to T_2 is given by

$$c_{\text{mean}} = \frac{\int_{T_1}^{T_2} c(T)dT}{T_2 - T_1}$$

If the algebraic relationship between specific heat and temperature is not known but the relation is available in the form of a graph or table, it is usually sufficiently accurate to evaluate the average or mean specific heat at the average of temperature over the temperature range in question.

LENGTHS, AREAS, SURFACES, AND VOLUMES

List of Symbols

A = angle, deg*
C = length of chord
d = diameter of circle or sphere = $2r$
h = height of segment, altitude of cone, etc., as explained in context
π = ratio of circumference to diameter of circle = 3.1416
θ = angle in radian measure*
S = length of arc, slant height, etc., as explained in context
r = radius of circle or sphere = $d/2$
R = mean radius of curvature for pipe bends

Areas are expressed in square units and volumes in cubic units of the same system in which lengths are measured.

Triangle. Area = ½(base) × altitude.

Circle. (See Fig. A1.25.)

Circumference = $\pi d = 2\pi r$.
Area = $\pi r^2 = \pi d^2/4$.
Length of arc $S = \theta r = 0.0175Ar$.
Length of chord $C = 2r \sin(\theta/2) = 2r \sin(A/2)$.

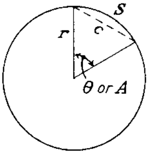

FIGURE A1.25 Length of arc and chord.

Area of Sector. (See Fig. A1.26.)

$$\text{Area} = \frac{1}{2}rS = \frac{1}{2}r^2\theta = \frac{\pi r^2 A}{360} = 0.008727r^2A$$

Area of Segment. (Method 1, Fig. A1.27) Find the area of the sector having same arc and area of triangle formed by chord and radii of sector. The area of the segment

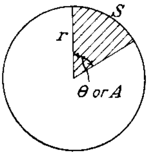

FIGURE A1.26 Area of sector.

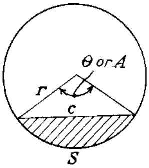

FIGURE A1.27 Area of segment, method 1.

---

* Degrees can be converted to radian measure by multiplying by 0.0175, since 2π rad = 360°. Hence, $\theta = 0.0175A$.

equals the sum of these two areas if the segment is greater than a semicircle, and it equals their difference if the segment is less than a semicircle.

$$\text{Area} = \frac{1}{2}r^2(\theta \pm \sin\theta)$$

$$= \frac{1}{2}r^2(0.0175A + \sin A)$$

Area of Segment. [Method 2 (approximate)]*

When $h = 0$ to $\frac{1}{4}d$, area $= h\sqrt{1.766dh - h^2}$.

When $h = \frac{1}{4}d$ to $\frac{1}{2}d$, area $= h\sqrt{0.017d^2 + 1.7dh - h^2}$.

When $h = \frac{1}{2}d$ to d, subtract area of empty sector from area of entire circle.

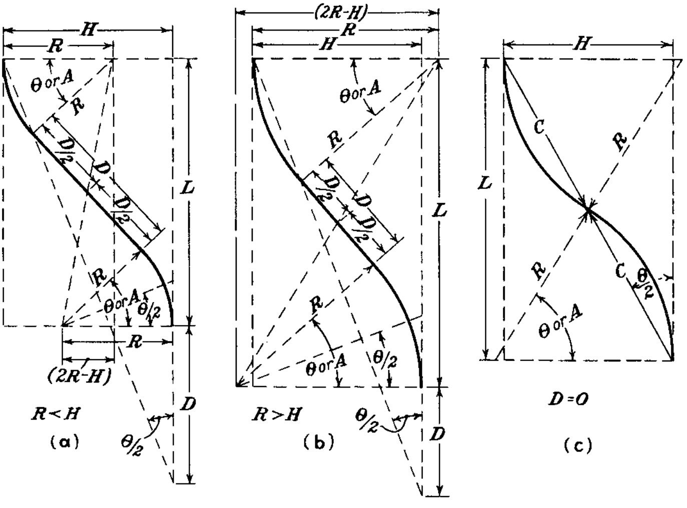
H
R
θ or A
R
D/2
D
D/2
L
R
θ or A
θ/2
R
(2R-H)
R<H
(a)
θ/2
D
(2R-H)
R
H
θ or A
R
D/2
D
D/2
L
R
θ or A
θ/2
R>H
(b)
θ/2
D
H
L
C
R
R
C
θ/2
θ or A
D=O
(c)

FIGURE A1.28 Offset bends.

Offset Bends. (See Fig. A1.28.) The relation of D, R, H, and L is determined by geometry for the general case shown in Fig. A1.28*a* and *b* as follows: Consider the diagonal line joining the centers of curvature of the two arcs in either figure as forming the hypotenuse of three right-angle triangles, and write an equation between the squares of the two other sides. Thus,

---

* For a sketch and table of volumes in partly full horizontal tanks, see Table A1.6. The greatest error possible by this method is 0.23 percent.

$$2\sqrt{\left(\frac{D}{2}\right)^2 + R^2} = \sqrt{(2R - H)^2 + L^2}$$

Squaring both sides and solving for each term in turn, we have

$$D = \sqrt{H^2 - 4HR + L^2}$$

$$L = \sqrt{D^2 + 4HR - H^2}$$

$$H = 2R - \sqrt{4R^2 - L^2 + D^2}$$

$$R = \frac{L^2 + H^2 - D^2}{4H}$$

where $\theta = 2 \tan^{-1}(HL + D)$ (from similarity of triangles, see Fig. A1.28*a*).
When $D = 0$ (Fig. A1.28*c*),

$$L = \sqrt{(4R - H)H}$$

$$R = \frac{L^2 + H^2}{4H}$$

$$C = \sqrt{RH}$$

Length of pipe in offset:

$$\begin{aligned} L &= 2R\theta + D \\ &= 0.035RA + D \\ &= 4R \tan^{-1} \frac{H}{L + D} + D \end{aligned}$$

where the angle is expressed in radians.

Cylinder

$$\text{Area} = 2\pi rh + 2\pi r^2 = 2\pi r(h + r)$$

where r = radius of base
h = height

$$\text{Volume} = \pi r^2 h$$

Pyramid. Right pyramid (i.e., vertex directly above center of base):

$$\text{Lateral area} = \tfrac{1}{2}\,(\text{slant height}) \times \text{perimeter of base}$$

$$\text{Volume} = \tfrac{1}{3}\,(\text{altitude}) \times \text{area of base}$$

Cone

Volume = $\tfrac{1}{3}$ (area of base) × perpendicular distance from vertex to plane of base

Right circular cone:

$$\text{Lateral area} = \pi r s$$

$$\text{Volume} = \tfrac{1}{3}\pi r^2 h$$

where s = slant height
r = radius of base
h = perpendicular distance from vertex to plane of base

Frustum of right circular cone:

$$\text{Lateral area} = \pi s(r + r')s = \sqrt{(r - r')^2 + h^2}$$

where r = radius of lower base
r' = radius of upper base
h = height of frustum
s = slant height of frustum

$$\text{Volume} = \tfrac{1}{3}\pi h(r^2 + rr' + r'^2)$$

Sphere

$$\text{Area} = 4\pi r^2 = \pi \mathrm{d}^2$$

$$\text{Volume} = \tfrac{4}{3}\pi r^3 = \tfrac{1}{6}\pi d^3$$

ACRONYMS AND ABBREVIATIONS

Listed below are some abbreviations and acronyms which are associated with activities related to piping.

AAE	American Association of Engineers
ACI	American Concrete Institute
ACRI	Air Conditioning and Refrigeration Institute
A-E	Architect-engineer
AEC	American Engineering Council
AESC	American Engineering Standards Committee
AFFFA	American Forged Fitting and Flange Association
AIDD	American Institute of Design and Drafting
AIME	American Institute of Mechanical Engineers
AISC	American Institute of Steel Construction
AISE	Association of Iron and Steel Engineers
AISI	American Iron and Steel Institute
AMAA	Adhesives Manufacturers Association of America
AMCA	Air Moving and Conditioning Association
AMFIE	Association of Mutual Fire Insurance Engineers

AMICE	Associate Member of Institute of Civil Engineers
ANS	American Nuclear Society
ANSI	American National Standards Institute
API	American Petroleum Institute
ARI	Air Conditioning and Refrigeration Institute
ASBC	American Standard Building Code
ASCE	American Society of Civil Engineers
ASCEA	American Society of Civil Engineers and Architects
ASCHE	American Society of Chemical Engineers
ASE	Amalgamated Society of Engineers
ASEA	American Society of Engineers and Architects
ASEE	American Society of Engineering Education
ASHACE	American Society of Heating and Air-Conditioning Engineers
ASHRAE	American Society of Heating, Refrigerating and Air-Conditioning Engineers
ASME	American Society of Mechanical Engineers
ASNE	American Society of Naval Engineers
ASRE	American Society of Refrigeration Engineers
ASSE	American Society of Safety Engineers; American Society of Sanitary Engineers
ASTM	American Society for Testing and Materials
ASWG	American steel and wire gauge
AWG	American wire gauge
AWS	American Welding Society
AWWA	American Water Works Association
BHN	Brinell hardness number
CAD	Computer-aided design
CADD	Computer-aided design drafting
db	Dry bulb
DCCP	Design change control program
DCEA	Directory of Civil Engineering Abbreviations
DCN	Design/drawing change notice
DIN	Deutsches Institu für Normung; German Standards Institute
DIPRA	Ductile Iron Pipe Research Association
DIS	Ductile Iron Society
EJMA	Expansion Joint Manufacturers Association
FCI	Fluid Controls Institute
FMA	Forging Manufacturers Association
gpm	Gallons per minute
gps	Gallons per second
HI	Hydraulic Institute

HVAC	Heating, ventilating, and air conditioning
IAEE	International Association of Earthquake Engineers
IFHTM	International Federation for the Heat Treatment of Materials
IFI	Industrial Fasteners Institute
IGSCC	Intergranular stress corrosion cracking
ISA	International Standards Association; Instrument Society of America
NACE	National Association of Corrosion Engineers
NAPE	National Association of Power Engineers
NASE	National Association of Stationary Engineers
NASPD	National Association of Steel Pipe Distributors
NCPI	National Clay Pipe Institute
NFPA	National Fire Protection Association
NIMA	National Insulation Manufacturers Association
NPT	National Pipe Taper
NSPE	National Society of Professional Engineers
NSSS	Nuclear steam system supplier
OBE	Operating-basis earthquake
OSHA	Occupational Safety and Health Act, or Administration
PACE	Professional Association of Consulting Engineers
PFI	Pipe Fabrication Institute
PJA	Pipe Jacking Association
PLCA	Pipe Line Contractors Association
ppb	Parts per billion
PFMA	Pipe Fittings Manufacturers Association
PPI	Plastic Pipe Institute
ppm	Parts per million
PPMS	Plastic Pipe Manufacturers' Society
PRI	Plastics and Rubber Institute
RWMA	Resistance Welding Manufacturers' Association
SAE	Society of Automotive Engineers
SCC	Stress corrosion cracking
SMA	Solder Markers' Association; Steel Manufacturers' Association
VMA	Valve Manufacturers' Association

USEFUL TABLES

Following are tables of units and measures associated with piping. For convenience of calculation, Table A1.3 provides decimal equivalents of eighths, sixteenths, thirty-seconds, and sixty-fourths of an inch. Table A1.4 provides diameters and thicknesses of wire and sheet-metal gauges. Table A1.5 provides volume of contents, in cubic

TABLE A1.3 Decimal Equivalents of Eighths, Sixteenths, Thirty-Seconds, and Sixty-Fourths of an Inch

Eighths
1/8 = 0.125
1/4 = 0.250
3/8 = 0.375
1/2 = 0.500
5/8 = 0.625
3/4 = 0.750
7/8 = 0.875

Sixteenths
1/16 = 0.0625
3/16 = 0.1875
5/16 = 0.3125
7/16 = 0.4375
9/16 = 0.5625
11/16 = 0.6875
13/16 = 0.8125
15/16 = 0.9375

Thirty-seconds
1/32 = 0.03125
3/32 = 0.09375
5/32 = 0.15625
7/32 = 0.21875
9/32 = 0.28125
11/32 = 0.34375
13/32 = 0.40625
15/32 = 0.46875
17/32 = 0.53125
19/32 = 0.59375
21/32 = 0.65625
23/32 = 0.71875
25/32 = 0.78125
27/32 = 0.84375
29/32 = 0.90625
31/32 = 0.96875

Sixty-fourths
1/64 = 0.015625
3/64 = 0.046875
5/64 = 0.078125
7/64 = 0.109375
9/64 = 0.140625
11/64 = 0.171875
13/64 = 0.203125
15/64 = 0.234375
17/64 = 0.265625
19/64 = 0.296875
21/64 = 0.328125
23/64 = 0.359375
25/64 = 0.390625
27/64 = 0.421875
29/64 = 0.453125
31/64 = 0.484375
33/64 = 0.515625
35/64 = 0.546875
37/64 = 0.578125
39/64 = 0.609375
41/64 = 0.640625
43/64 = 0.671875
45/64 = 0.703125
47/64 = 0.734375
49/64 = 0.765625
51/64 = 0.796875
53/64 = 0.828125
55/64 = 0.859375
57/64 = 0.890625
59/64 = 0.921875
61/64 = 0.953125
63/64 = 0.984375

1 in = 25.4 mm.

feet and U.S. gallons, of cylindrical tanks of various diameters and 1 ft in length, when completely filled. Table A1.6 lists the contents of pipes and cylindrical tanks per foot of length for any depth of liquid.

TABLE A1.4 Wire and Sheet-Metal Gauges*

Gauge no.	American wire gauge, or Brown and Sharpe (for copper wire)	Steel wire gauge, or Washburn and Moen or Roebling (for steel wire)	Birmingham wire gauge (B.W.G.) or Stubs' iron wire (for steel wire or sheets)	Stubs steel wire gauge	British Imperial standard wire gauge (S.W.G.)	U.S. standard gauge for sheet metal (iron and steel) 480 lb/ft^3	AISI inch equivalent for U.S. steel sheet thickness	British standard for iron and steel, sheets and hoops 1914 (B.G.)
0000000	......	0.4900	......	......	0.500	0.500	......	0.6666
000000	......	0.4615	......	......	0.464	0.469	......	0.6250
00000	......	0.4305	......	......	0.432	0.438	......	0.5883
0000	0.460	0.3938	0.454	......	0.400	0.406	......	0.5416
000	0.410	0.3625	0.425	......	0.372	0.375	......	0.5000
00	0.365	0.3310	0.380	......	0.348	0.344	......	0.4452
0	0.325	0.3065	0.340	......	0.324	0.312	......	0.3964
1	0.289	0.2830	0.300	0.227	0.300	0.281	......	0.3532
2	0.258	0.2625	0.284	0.219	0.276	0.266	......	0.3147
3	0.229	0.2437	0.259	0.212	0.252	0.250	0.2391	0.2804
4	0.204	0.2253	0.238	0.207	0.232	0.234	0.2242	0.2500
5	0.182	0.2070	0.220	0.204	0.212	0.219	0.2092	0.2225
6	0.162	0.1920	0.203	0.201	0.192	0.203	0.1943	0.1981
7	0.144	0.1770	0.180	0.199	0.176	0.188	0.1793	0.1764
8	0.128	0.1620	0.165	0.197	0.160	0.172	0.1644	0.1570
9	0.114	0.1483	0.148	0.194	0.144	0.156	0.1495	0.1398
10	0.102	0.1350	0.134	0.191	0.128	0.141	0.1345	0.1250
11	0.091	0.1205	0.120	0.188	0.116	0.125	0.1196	0.1113
12	0.081	0.1055	0.109	0.185	0.104	0.109	0.1046	0.0991
13	0.072	0.0915	0.095	0.182	0.092	0.094	0.0897	0.0882
14	0.064	0.0800	0.083	0.180	0.080	0.078	0.0747	0.0785
15	0.057	0.0720	0.072	0.178	0.072	0.070	0.0673	0.0699
16	0.051	0.0625	0.065	0.175	0.064	0.062	0.0598	0.0625
17	0.045	0.0540	0.058	0.172	0.056	0.056	0.0538	0.0556
18	0.040	0.0475	0.049	0.168	0.048	0.050	0.0478	0.0495
19	0.036	0.0410	0.042	0.164	0.040	0.0438	0.0418	0.0440
20	0.032	0.0348	0.035	0.161	0.036	0.0375	0.0359	0.0392
21	0.0285	0.0317	0.032	0.157	0.032	0.0344	0.0329	0.0349
22	0.0253	0.0286	0.028	0.155	0.028	0.0312	0.0299	0.0313
23	0.0226	0.0258	0.025	0.153	0.024	0.0281	0.0269	0.0278
24	0.0201	0.0230	0.022	0.151	0.022	0.0250	0.0239	0.0248
25	0.0179	0.0204	0.020	0.148	0.020	0.0219	0.0209	0.0220
26	0.0159	0.0181	0.018	0.146	0.018	0.0188	0.0179	0.0196
27	0.0142	0.0173	0.016	0.143	0.0164	0.0172	0.1064	0.0175
28	0.0126	0.0162	0.014	0.139	0.0148	0.0156	0.0149	0.0156
29	0.0113	0.0150	0.013	0.134	0.0136	0.0141	0.0135	0.0139
30	0.0100	0.0140	0.012	0.127	0.0124	0.0125	0.0120	0.0123
31	0.0089	0.0132	0.010	0.120	0.0116	0.0109	0.0105	0.0110
32	0.0080	0.0128	0.009	0.115	0.0108	0.0102	0.0097	0.0098
33	0.0071	0.0118	0.008	0.112	0.0100	0.0094	0.0090	0.0087

TABLE A1.4 Wire and Sheet-Metal Gauges* (*Continued*)

Gauge no.	American wire gauge, or Brown and Sharpe (for copper wire)	Steel wire gauge, or Washburn and Moen or Roebling (for steel wire)	Birmingham wire gauge (B.W.G.) or Stubs' iron wire (for steel wire or sheets)	Stubs steel wire gauge	British Imperial standard wire gauge (S.W.G.)	U.S. standard gauge for sheet metal (iron and steel) 480 lb/ft^3	AISI inch equivalent for U.S. steel sheet thickness	British standard for iron and steel, sheets and hoops 1914 (B.G.)
34	0.0063	0.0104	0.007	0.110	0.0092	0.0086	0.0082	0.0077
35	0.0056	0.0095	0.005	0.108	0.0084	0.0078	0.0075	0.0069
36	0.0050	0.0090	0.004	0.106	0.0076	0.0070	0.0067	0.0061
37	0.0045	0.0085	......	0.103	0.0068	0.0066	0.0064	0.0054
38	0.0040	0.0080	......	0.101	0.0060	0.0062	0.0060	0.0048
39	0.0035	0.0075	......	0.099	0.0052	......	......	0.0043
40	0.0031	0.0070	......	0.097	0.0048	......	......	0.0039
41	......	0.0066	......	0.095	0.0044	......	......	0.0034
42	......	0.0062	......	0.092	0.0040	......	......	0.0031
43	......	0.0060	......	0.088	0.0036	......	......	0.0027
44	......	0.0058	......	0.085	0.0032	......	......	0.0024
45	......	0.0055	......	0.081	0.0028	......	......	0.0022
46	......	0.0052	......	0.079	0.0024	......	......	0.0019
47	......	0.0050	......	0.077	0.0020	......	......	0.0017
48	......	0.0048	......	0.075	0.0016	......	......	0.0015
49	......	0.0046	......	0.072	0.0012	......	......	0.0014
50	......	0.0044	......	0.069	0.0010	......	......	0.0012

* Diameters and thicknesses in decimal parts of an inch.
1 in = 25.4 mm.
1 ft^3 = 0.02832 m^3.
1 lb = 0.4536 kg.

TABLE A1.5 Contents, in Cubic Feet and U.S. Gallons, of Cylindrical Tanks of Various Diameters and 1 Ft in Length, When Completely Filled*

Diameter, in	For 1 ft in length		Length, in inches, of cylinder of 1-ft^3 capacity	Diameter, in	For 1 ft in length		Length, in inches, of cylinder of 1-ft^3 capacity
	Cubic feet; also, area in square feet	U.S. gal., 231 in^3			Cubic feet; also, area in square feet	U.S. gal., 231 in^3	
12½	0.8522	6.375	14.080	21¼	2.463	18.42	4.872
12⅝	0.8693	6.503	13.800	21½	2.521	18.86	4.760
12¾	0.8866	6.632	13.530	21¾	2.580	19.30	4.651
12⅞	0.9041	6.763	13.270	22	2.640	19.75	4.545
13	0.9218	6.895	13.020	22¼	2.700	20.20	4.445
13⅛	0.9395	7.028	12.780	22½	2.761	20.66	4.347
13¼	0.9575	7.163	12.530	22¾	2.823	21.12	4.251
13⅜	0.9757	7.299	12.300	23	2.885	21.58	4.160
13½	0.994	7.436	12.070	23¼	2.948	22.05	4.070
13⅝	1.013	7.578	11.850	23½	3.012	22.53	3.990
13¾	1.031	7.712	11.640	23¾	3.076	23.01	3.901
13⅞	1.051	7.855	11.420	24	3.142	23.50	3.819
14	1.069	7.997	11.230	25	3.409	25.50	3.520
14⅛	1.088	8.139	11.030	26	3.678	27.58	3.263
14¼	1.107	8.281	10.840	27	3.976	29.74	3.018
14⅜	1.127	8.431	10.650	28	4.276	31.99	2.806
14½	1.147	8.578	10.460	29	4.587	34.31	2.616
14⅝	1.167	8.730	10.280	30	4.909	36.72	2.444
14¾	1.187	8.879	10.110	31	5.241	39.21	2.290
14⅞	1.207	9.029	9.940	32	5.585	41.78	2.149
15	1.227	9.180	9.780	33	5.940	44.43	2.020
15⅛	1.248	9.336	9.620	34	6.305	47.16	1.903
15¼	1.268	9.485	9.460	35	6.681	49.98	1.796
15⅜	1.289	9.642	9.310	36	7.069	52.88	1.698
15½	1.310	9.801	9.160	37	7.467	55.86	1.607
15⅝	1.332	9.964	9.010	38	7.876	58.92	1.527
15¾	1.353	10.121	8.870	39	8.296	62.06	1.446
15⅞	1.374	10.278	8.730	40	8.727	65.28	1.375
16	1.396	10.440	8.600	41	9.168	68.58	1.309
16¼	1.440	10.772	8.330	42	9.621	71.91	1.247
16½	1.485	11.11	8.081	43	10.085	75.44	1.190
16¾	1.530	11.45	7.843	44	10.559	78.99	1.136
17	1.576	11.79	7.511	45	11.045	82.62	1.087
17¼	1.623	12.14	7.394	46	11.541	86.33	1.040
17½	1.670	12.49	7.186	47	12.048	90.13	0.996
17¾	1.718	12.85	6.985	48	12.566	94.00	0.955
18	1.768	13.22	6.787	49	13.095	97.96	0.916
18¼	1.817	13.59	6.604	50	13.635	102.00	0.880
18½	1.867	13.96	6.427	51	14.186	106.12	0.846
18¾	1.917	14.34	6.259	52	14.748	110.32	0.814
19	1.969	14.73	6.094	52	15.320	114.60	0.783
19¼	2.021	15.12	5.938	54	15.904	118.97	0.755
19½	2.074	15.51	5.786	55	16.499	122.82	0.727
19¾	2.128	15.92	5.639	56	17.104	127.95	0.702
20	2.182	16.32	5.500	57	17.720	132.55	0.677
20¼	2.237	16.73	5.365	58	18.347	137.24	0.654
20½	2.292	17.15	5.236	59	18.985	142.02	0.632
20¾	2.348	17.56	5.110	60	19.637	146.89	0.611
21	2.405	17.99	4.989				

* To find the capacity of pipes greater than the largest given in the table, look in the table for a pipe one-half the given size and multiply its capacity by 4; or one of one-third its size, and multiply its capacity by 9; etc.

1 gal = 231 in^3, 1 ft^3 = 7.4805 gal., 1 gal = 3.7853 L, 1 U.S. gal = 0.83267 Imperial gal., 1 Imp. gal = 4.5459 L = 0.00455 m^3.

TABLE A1.6 Contents of Pipes and Cylindrical Tanks—Axis Horizontal—Flat Ends—per Foot of Length for any Depth of Liquid

h = depth of liquid (in)	d = diameter of tank, in									
	12		18		24		30		36	
	gal	ft^3	gal	ft^3	gal	ft^3	gal	ft^3	gal	ft^3
2	0.64	0.0860	0.80	0.1072	0.93	0.1244	1.05	0.1400	1.15	0.154
4	1.73	0.2317	2.18	0.2920	2.57	0.3440	2.90	0.3878	3.21	0.429
6	2.94	0.3927	3.85	0.5149	4.59	0.6140	5.23	0.6988	5.80	0.775
8	4.14	0.5537	5.67	0.7578	6.85	0.9152	7.85	1.049	8.75	1.17
10	5.23	0.6994	7.55	1.009	9.26	1.238	10.72	1.432	12.0	1.60
12	5.87	0.7854	9.38	1.252	11.75	1.571	13.72	1.833	15.4	2.03
14	.....	.....	11.04	1.476	14.24	1.903	16.82	2.248	19.0	2.54
16	.....	.....	12.43	1.659	16.65	2.226	19.90	2.660	22.6	3.02
18	.....	.....	13.22	1.767	18.91	2.527	23.00	3.075	26.4	3.53
20	.....	.....	.....	.....	20.93	2.797	26.00	3.476	29.6	3.95
22	.....	.....	.....	.....	22.57	3.017	28.85	3.859	33.4	4.46
24	.....	.....	.....	.....	23.50	3.1416	31.49	4.209	37.4	5.00
26	.....	.....	.....	.....	.....	.....	33.82	4.521	40.4	5.40
28	.....	.....	.....	.....	.....	.....	35.67	4.768	43.7	5.84
30	.....	.....	.....	.....	.....	.....	36.72	4.908	46.6	6.23
32	.....	.....	.....	.....	.....	.....	.....	.....	49.1	6.55
34	.....	.....	.....	.....	.....	.....	.....	.....	51.2	6.85
36	.....	.....	.....	.....	.....	.....	.....	.....	52.9	7.07
38										
40										
42										
44										
46										
48										
50										
52										
54										
56										
58										
60										
64										
68										
72										
76										
80										
84										

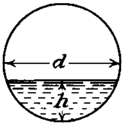

Formulas for determination of approximate capacity of horizontal cylindrical tanks for any depth. Given: diameter of tank d and height of segment h.

To find area of segment

when $h = 0$ to $\frac{1}{4}d$; area $= h\sqrt{1.766dh - h^2}$

when $h = \frac{1}{4}d$ to $\frac{1}{2}d$; area $= h\sqrt{0.017d^2 + 1.7dh - h^2}$

1 ft^3 = 7.4805 U.S. gal = 6.2288 Imperial gal

1 m^3 = 264.17 U.S. gal = 219.97 Imperial gal

1 m^3 = 35.3147 ft^3 = 1000 L

TABLE A1.6 Contents of Pipes and Cylindrical Tanks—Axis Horizontal—Flat Ends—per Foot of Length for any Depth of Liquid (*Continued*)

h = depth of liquid (in)	d = diameter of tank, in							
	42		48		54		60	
	gal	ft³	gal	ft³	gal	ft³	gal	ft³
2	1.25	0.167	1.36	0.182	1.43	0.191	1.47	0.197
4	3.49	0.465	3.72	0.496	3.98	0.531	4.19	0.560
6	6.31	0.843	6.90	0.921	7.25	0.967	7.48	1.00
8	9.57	1.28	10.3	1.37	11.0	1.47	11.6	1.55
10	13.3	1.77	14.2	1.89	15.2	2.02	16.2	2.16
12	16.9	2.26	18.6	2.48	19.7	2.63	21.0	2.81
14	21.0	2.80	22.8	3.04	24.2	3.23	26.3	3.52
16	25.2	3.36	27.4	3.66	29.4	3.92	31.4	4.19
18	29.4	3.92	32.3	4.31	34.8	4.64	36.9	4.93
20	33.8	4.51	37.0	4.94	40.1	5.35	42.8	5.72
22	38.2	5.10	42.0	5.61	45.6	6.08	48.8	6.53
24	42.5	5.67	47.0	6.27	51.0	6.80	54.7	7.30
26	46.8	6.25	52.0	6.94	56.7	7.56	61.0	8.15
28	50.9	6.80	57.0	7.61	62.3	8.33	66.9	8.94
30	55.0	7.34	61.7	8.23	67.8	9.05	73.4	9.81
32	58.8	7.86	66.6	8.89	73.4	9.79	79.7	10.7
34	62.4	8.19	71.3	9.52	78.8	10.5	85.9	11.5
36	65.6	8.75	75.7	10.1	84.2	11.2	92.6	12.4
38	68.4	9.13	79.9	10.7	89.4	11.9	98.0	13.1
40	70.7	9.44	83.7	11.2	94.4	12.6	105	14.0
42	72.0	9.61	87.4	11.7	99.5	13.3	110	14.7
44	.....	.....	90.3	12.1	104	13.9	115	15.4
46	.....	.....	92.7	12.4	108	14.4	121	16.2
48	.....	.....	94.0	12.6	112	14.9	126	16.8
50	.....	.....	.....	.....	115	15.4	131	17.5
52	.....	.....	.....	.....	117	15.6	135	18.0
54	.....	.....	.....	.....	119	15.9	139	18.6
56	.....	.....	.....	.....	.....	.....	143	19.1
58	.....	.....	.....	.....	.....	.....	145	19.4
60	.....	.....	.....	.....	.....	.....	147	19.6
64								
68								
72								
76								
80								
84								

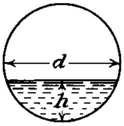

Formulas for determination of approximate capacity of horizontal cylindrical tanks for any depth. Given: diameter of tank d and height of segment h.

To find area of segment

when $h = 0$ to $\frac{1}{4}d$; area $= h\sqrt{1.766dh - h^2}$

when $h = \frac{1}{4}d$ to $\frac{1}{2}d$; area $= h\sqrt{0.017d^2 + 1.7dh - h^2}$

1 ft³ = 7.4805 U.S. gal = 6.2288 Imperial gal

1 m³ = 35.3147 ft³ = 1000 L

TABLE A1.6 Contents of Pipes and Cylindrical Tanks—Axis Horizontal—Flat Ends—per Foot of Length for any Depth of Liquid (*Continued*)

h = depth of liquid (in)	d = diameter of tank, in							
	66		72		73		84	
	gal	ft^3	gal	ft^3	gal	ft^3	gal	ft^3
2	1.57	0.210	1.65	0.220	1.73	0.229	1.77	0.236
4	4.42	0.580	4.64	0.618	4.81	0.641	4.95	0.661
6	8.04	1.07	8.10	1.16	8.78	1.17	9.13	1.22
8	12.2	1.63	12.8	1.71	13.4	1.78	13.9	1.86
10	17.0	2.27	17.7	2.36	18.6	2.48	19.7	2.63
12	22.1	2.96	23.6	3.14	24.2	3.22	25.7	3.43
14	27.6	3.68	28.9	3.85	30.2	4.03	31.5	4.21
16	33.3	4.45	35.0	4.66	36.1	4.81	38.2	5.10
18	39.3	5.25	41.7	5.55	43.3	5.78	45.8	6.12
20	45.5	6.08	48.0	6.40	50.3	6.72	52.5	7.01
22	51.8	6.93	54.7	7.29	57.6	7.69	60.0	8.02
24	58.3	7.79	61.9	8.25	64.8	8.65	68.8	9.19
26	65.0	8.68	68.7	9.15	72.1	9.63	75.7	10.1
28	71.8	9.59	76.0	10.2	80.0	10.7	84.1	11.2
30	78.6	10.5	83.5	11.1	88.0	11.8	91.6	12.3
32	85.4	11.4	90.7	12.1	96.0	12.8	101	13.5
34	92.3	12.3	98.2	13.1	104	13.9	109	14.5
36	99.1	13.2	106	14.1	112	14.9	117	15.6
38	106	14.2	113	15.1	120	16.0	126	16.8
40	113	15.1	121	16.1	128	17.1	135	18.0
42	119	15.9	128	17.1	136	18.2	144	19.2
44	126	16.8	136	18.2	144	19.2	153	20.4
46	132	17.6	143	19.1	152	20.3	162	21.6
48	138	18.4	150	20.0	160	21.4	171	22.8
50	144	19.2	157	21.0	168	22.4	179	23.9
52	150	20.0	164	21.9	176	23.5	187	25.0
54	156	20.8	170	22.7	183	24.4	196	26.2
56	161	21.5	176	23.5	191	25.5	204	27.2
58	165	22.0	182	24.3	198	26.4	212	28.3
60	169	22.6	188	25.1	205	27.4	219	29.2
64	176	23.5	198	26.4	218	29.1	235	31.4
68	.....	.....	207	27.6	230	30.7	250	33.4
72	.....	.....	211	28.2	239	31.9	262	35.0
76	.....	.....	.....	.....	246	32.8	274	36.6
80	.....	.....	.....	.....	.....	.....	283	37.8
84	.....	.....	.....	.....	.....	.....	288	38.5

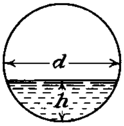

Formulas for determination of approximate capacity of horizontal cylindrical tanks for any depth. Given: diameter of tank d and height of segment h.

To find area of segment

when $h = 0$ to $\frac{1}{4}d$; area $= h\sqrt{1.766dh - h^2}$

when $h = \frac{1}{4}d$ to $\frac{1}{2}d$; area $= h\sqrt{0.017d^2 + 1.7dh - h^2}$

1 ft^3 = 7.4805 U.S. gal = 6.2288 Imperial gal

1 m^3 = 35.3147 ft^3 = 1000 L

UNITS AND CONVERSION TABLES

The units and conversion factors for the commonly used quantities associated with piping are given in tables contained in App. E1 of this handbook. The following is a list of tables in App. E1.

Table E1.1	Conversion Factors—Frequently Used U.S. Customary Units to SI Standard Units
Table E1.2	Mass Equivalents
Table E1.3	Length Equivalents
Table E1.4	Area Equivalents
Table E1.5	Volume Equivalents
Table E1.6	Volumetric Flow Rate Equivalents
Table E1.7	Density Equivalents
Table E1.8	Pressure Equivalents
Table E1.9	Energy Equivalents
Table E1.10	Power Equivalents
Table E1.11	Conversion Factors for Thermal Conductivity, *k*
Table E1.12	Prefix Names of Multiples and Submultiples of Units

In addition to App. E1, conversion tables and factors are included in various chapters of this handbook.

REFERENCES

1. ASME B31, Code for Pressure Piping, Section B31.3, Chemical Plant and Petroleum Refinery Piping, American Society of Mechanical Engineers, New York, 1996.
2. ASME B31, Code for Pressure Piping, Section B31.8, Gas Transmission and Distribution Piping Systems, American Society of Mechanical Engineers, New York, 1995 ed.
3. ASME B31, Code for Pressure Piping, Section B31.5, Refrigeration Piping, American Society of Mechanical Engineers, New York, 1992 ed. with 1994 addendum.
4. ASME B31, Code for Pressure Piping, Section B31.4, Liquid Transportation Systems for Hydrocarbons, Liquid Petroleum Gas, Anhydrous Ammonia, and Alcohols, American Society of Mechanical Engineers, New York, 1992 ed. with 1994 addendum.
5. ASME B31, Code for Pressure Piping, Section B31.1, Power Piping, American Society of Mechanical Engineers, New York, 1998 ed.
6. ASME Boiler and Pressure Vessel Code, Section III, Nuclear Power Plant Components, American Society of Mechanical Engineers, New York, 1998 ed.
7. ASME Boiler and Pressure Vessel Code, Section XI, Rules for Inservice Inspection of Nuclear Power Plant Components, American Society of Mechanical Engineers, New York, 1998 ed.
8. ASME B31, Code for Pressure Piping, Section B31.9, Building Services Piping, American Society of Mechanical Engineers, New York, 1996.

9. ASME B31, Code for Pressure Piping, Section B31.11, Slurry Transportation Piping Systems, American Society of Mechanical Engineers, New York, 1989.
10. ASME B36.10M, Welded and Seamless Wrought Steel Pipe, American Society of Mechanical Engineers, New York, 1996.
11. ASME B36.19M, Stainless Steel Pipe, American Society of Mechanical Engineers, New York, 1985.

CHAPTER A2
PIPING COMPONENTS

Ervin L. Geiger, P.E.
Engineering Supervisor
Bechtel Power Corporation, Frederick, Maryland

The term *piping* refers to the overall network of pipes, fittings, flanges, valves, and other components that comprise a conduit system used to convey fluids. Whether a piping system is used to simply convey fluids from one point to another or to process and condition the fluid, piping components serve an important role in the composition and operation of the system. A system used solely to convey fluids may consist of relatively few components, such as valves and fittings, whereas a complex chemical processing system may consist of a variety of components used to measure, control, condition, and convey the fluids. In the following sections, the characteristics and functions of the various piping components are described.

PIPE AND TUBE PRODUCTS

Pressure pipe and tube products are manufactured to a variety of standard specifications of varying designs, employing different manufacturing practices and using a wide variety of materials. The end user of these products must apply the least-cost product suitable for the specified service conditions. Typically, steel and alloy pressure piping is available in cast, wrought, and seam-welded forms. Welded and seamless wrought steel pipe is supplied in standard sizes and wall thickness conforming to ASME B36.10M. Stainless-steel pipe is supplied in standard sizes and wall thickness conforming to ASME B36.19M. These standard pipe dimensions are tabulated in Apps. E2 and E2M, and the metric size equivalent DN of the NPS is given in Chap. A1. Some commonly specified piping materials are listed in Table A2.1.

Pressure Tubing

Pressure-tube applications commonly involve external heat applications, as in boilers or superheaters. Pressure tubing is produced to the actual outside diameter and minimum or average wall thickness specified by the purchaser. Pressure tubing may be hot- or cold-finished. The wall thickness is normally given in decimal parts of an inch rather than as a fraction or gauge number. When gauge numbers are given

TABLE A2.1 Prevalent Piping Specifications

Specification	Product form	Size range (NPS)	Application
ASTM A53	Seamless/welded	⅛ to 26	Ordinary use in gas, air, oil, water, steam
ASTM A106	Seamless	⅛ to 48	High-temperature service (steam, water, gas, etc.)
ASTM A369	Forged and bored	Custom	High-temperature service
ASTM A335	Seamless	Custom	High-temperature service
ASTM A333	Seamless/welded	⅛ and larger	Service requiring excellent fracture toughness at low temperatures
ASTM A671	Electric fusion-welded	16 and larger	Low-temperature service
ASTM A672	Electric fusion-welded	16 and larger	Moderate-temperature service
ASTM A691	Electric fusion-welded	16 and larger	High-temperature service
ASTM A312	Seamless/welded	⅛ and larger	Low- to high-temperature and corrosive service
API 5L	Seamless/welded		Line pipe, refinery, and transmission service

without reference to a system, Birmingham wire gauge (BWG) is implied. Weights of commercial tubing are given in Apps. E3 and E3M.

Pressure tubing is usually made from steel produced by the open-hearth, basic oxygen, or electric furnace processes. Seamless pressure tubing may be either hot-finished or cold-drawn. Cold-drawn steel tubing is frequently process-annealed at temperatures above 1200°F (650°C). To ensure quality, maximum hardness values are frequently specified. Hot-finished or cold-drawn seamless low-alloy steel tubes generally are process-annealed at temperatures between 1200°F (650°C) and 1350°F (730°C). Austenitic stainless-steel tubes are usually annealed at temperatures between 1800°F (980°C) and 2100°F (1150°C), with specific temperatures varying somewhat with each grade. This is generally followed by pickling, unless bright annealing was done.

Pipe Fittings

The major piping materials are also produced in the form of standard fittings. Among the more widely used materials are ductile or cast iron, malleable iron, brass, copper, cast steel, forged steel, and wrought steel. Other major nonferrous piping materials are also produced in the form of cast and wrought fittings. Ductile and cast-iron fittings are made by conventional foundry methods for a variety of joints including bell-and-spigot, push-on flanged, and mechanical (gland-type) or other proprietary designs.

Ductile and Cast-Iron Fittings

Cast-iron fittings are covered by a number of ASME and ANSI/AWWA standards:

ASME B16.1	Cast Iron Pipe Flanges and Flanged Fittings, Class 25, 125, 250, and 800 (The standard also includes bolt, nut, and gasket data.)

ASME B16.4	Gray Iron Threaded Fittings, Class 125 and 250
ASME B16.12	Cast Iron Threaded Drainage Fittings
ANSI/AWWA C110/A21.10	Ductile Iron and Gray Iron Fittings, 3-in through 48-in (76 mm through 6200 mm), for Water and Other Liquids
ANSI/AWWA C115/A21.15	Ductile Iron and Gray Iron Fittings, 3-in through 48-in (76 mm through 1200 mm), for Water
ANSI/AWWA C153/A21.53	Ductile Iron Compact Fittings, 3-in through 24-in (76 mm through 610 mm) and 54-in through 64-in (1400 mm through 1600 mm), for Water Service

Cast-Iron Threaded Fittings

Cast-iron threaded fittings are covered by ASME Standard B16.4. The standard specifies the below-listed attributes for Class 125 and Class 250 tees, crosses, 45° and 90° elbows, reducing tees, caps, couplings, and reducing couplings in sizes ranging from NPS ¼ (DN 6) through NPS 12 (DN 300), inclusive. However, in Class 250, the standard only covers 45° and 90° elbows, straight tees, and straight crosses.

- Pressure-temperature ratings
- Size and method of designating openings of reducing fittings
- Marking
- Minimum requirements for materials
- Dimensions and tolerances
- Threading
- Coatings

TABLE A2.2 Pressure-Temperature Rating of ANSI/ASME B16.4 Cast-Iron Fittings

Temperature (°F)	Class 125 (psi)	Class 250 (psi)
−20 to 150	175	400
200	165	370
250	150	340
300	150	310
350	125*	300
400	. . .	250†

* Permissible for service temperature up to 353°F, reflecting the temperature of saturated steam at 125 psig.

† Permissible for service temperature up to 406°F, reflecting the temperature of saturated steam at 250 psig.

The pressure-temperature ratings of Class 125 and Class 250 are listed in Table A2.2. The ratings are independent of the contained fluid and are the maximum nonshock pressure at the listed temperature. As a minimum, the material must conform to class A of ASTM A126. The fittings are threaded with ASME B1.20.1 pipe threads.

TABLE A2.3 Pressure-Temperature Rating of ASME B16.3 Malleable-Iron Threaded Fittings

Temperature (°F)	Class 150 (psig)	Class 300 (psig)		
		Sizes ¼ to 1	Sizes 1¼ to 2	Sizes 2½ to 3
−20 to 150	175	2000	1500	1000
200	265	1785	1350	910
250	225	1575	1200	825
300	185	1360	1050	735
350	150*	1150	900	650
400	. . .	935	750	560
450	. . .	725	600	475
500	. . .	510	450	385
550	. . .	300	300	300

* Permissible for service temperature up to 366°F, reflecting the temperature of saturated steam at 150 psig.

Malleable-Iron Threaded Fittings

Malleable-iron fittings are also extensively produced. They are generally made with threaded joints. Malleable-iron threaded fittings for Classes 150 and 300 are standardized in ASME B16.3. The standard specifies the same attributes for Class 150 and 300 fittings as discussed under ASME B16.4 for gray-iron fittings. The fittings are available in a variety of configurations from NPS ⅛ (DN 3) through NPS 6 (DN 150). The pressure-temperature ratings of these fittings are listed in Table A2.3. As with cast-iron fittings, the ratings are independent of the contained fluid and are maximum nonshock pressures at the listed temperatures. Malleable-iron fittings are furnished black, galvanized, or as otherwise ordered by the buyer. The galvanized threaded fittings commonly used in water piping for homes are Class 150 malleable iron. Minimum properties of malleable iron are required to meet ASTM A197 Cupola Malleable Iron requirements. The fittings are threaded with ASME B1.20.1 pipe threads.

Cast-Brass and Cast-Bronze Threaded Fittings

Cast-brass and -bronze threaded fittings are commonly produced for use with brass pipe. The fittings are manufactured in accordance with ASME B16.15 in pressure Classes 125 and 250. The standard establishes pressure-temperature ratings, size and method of designating openings of reducing fittings, marking, minimum requirements for casting quality, and materials. The nonshock pressure-temperature ratings are listed in Table A2.4. The permitted materials for the fittings are:

ASTM B62, alloy C83600
ASTM B584, alloy C83800 and C84400
ASTM B16, alloy C36000 (bar stock)*
ASTM B140, alloy C32000 or C31400 (bar stock)*

---

* Used for manufacture of threaded plugs, bushings, and caps.

TABLE A2.4 Pressure-Temperature Rating for Classes 125 and 250 Cast-Bronze Threaded Fittings (ANSI/ASME B16.15-1985)*

Temperature (°F)	Class 125 (psi)	Class 250 (psi)
−20 to 150	200	400
200	190	385
250	180	365
300	165	335
350	150	300
400	125	250

* Ratings are independent of the contained fluid.

Soldered-Joint Fittings

Soldered-joint wrought metal and cast-brass or -bronze fittings for use with copper water tubes are covered by ASTM B88 and H23.1. The fittings are made in accordance with ASME B16.22 and B16.18, respectively. Joints using these types of fittings and made with 50–50 tin-lead solder, 95-tin 5-antimony solder, or solder melting above 1100°F (593°C) have the pressure-temperature ratings shown in Table A2.5. (*Note:* Lead-bearing solder is not permitted for potable water service.)

Wrought copper fittings normally have a minimum copper content of 83 percent. Cast-brass fittings conform to ASTM B62 and have a nominal composition of 85 percent copper, 5 percent tin, 5 percent lead, and 5 percent zinc. The minimum requirements for 50–50 tin-lead solder generally used with these fittings are covered in ASTM B32 alloy grade 50A. Metal thickness tolerances and general dimensions of fittings are given in ASME B16.18.

TABLE A2.5 Pressure Ratings for Solder Joints (ASME B16.18-1984). Maximum Working Pressure (psi).

Solder used in joints	Working temperatures (°F)	⅛–1 in, incl.*	1¼–2 in, incl.*	2½–4 in, incl.*	5–8 in, incl.*
50–50 tin-lead†	100	200	175	150	135
	150	150	125	100	90
	200	100	90	75	70
	250	85	75	50	45
95–5, tin-antimony	100	500	400	300	270
	150	400	350	275	250
	200	300	250	200	180
	250	200	175	150	135
Solders melting at or above 1100°F	‡	‡	‡	‡	‡

* Standard water tube sizes.
† ASTM B32 alloy grade 50A.
‡ Rating to be consistent with materials and procedures employed.

Cast-Iron Flanged Fittings

Cast-iron flanged fittings are produced in accordance with ASME B16.1. The standard specifies pressure-temperature ratings, sizes, marking, minimum requirements for materials, dimensions and tolerances, bolting, gasketing, and testing requirements. The fittings are manufactured in a variety of configurations (tees, elbows, crosses, laterals, etc.) in pressure Classes 25, 125, 250, and 800. Not all sizes and styles are available in all ratings. The sizes available in each class are listed below:

Pressure class	Size range, NPS (DN)
25	4 (100) through 72 (1800)
125	1 (25) through 96 (2400)
250	1 (25) through 30 (750)
800	2 (50) through 12 (300)

The nonshock pressure-temperature ratings for the four pressure classes are listed in Table A2.6. The materials of construction are ASTM A 126 class A or B, as shown in Table A2.6.

Cast- and Forged-Steel and Nickel-Alloy Flanged Fittings

Flanged fittings of steel and nickel alloys are manufactured in accordance with ASME B16.5. The standard covers ratings, materials, dimensions, tolerances, marking, testing, and methods of designating openings for pipe flanges and flanged fittings in sizes NPS ½ (DN 15) through NPS 24 (DN 600) and in rating Classes 150, 300, 400, 600, 900, 1500, and 2500. However, not all sizes are available in all pressure classes. Dimensions of more commonly used fittings are given in Table A2.7. The standard also contains recommendations and requirements for bolting and gaskets.

Within each pressure class, the dimensions of the fittings are held constant, irrespective of the materials being used. Since the physical properties of different materials vary, the pressure-temperature ratings within each pressure class vary with the material. As an example, a Class 600 forged carbon steel (A105) flange is rated at 1270 psig at 400°F, whereas a Class 600 forged stainless steel (A182, F304) flange is rated at 940 psig at 400°F. The matrix of materials and pressure classes is too numerous to reproduce here; therefore, the reader is referred to ASME B16.5 for the flanged fitting pressure-temperature ratings. Figures A2.1, A2.2, and A2.3 illustrate the reduction in pressure rating with increase in temperature for group 1.1 (ASTM A105), 1.10 (ASTM A182, Gr. F22, Cl. 3), and 2.1 (ASTM A182, Gr. F304) materials.

Forged-Steel Threaded and Socket-Welding Fittings

Forged-steel socket welding and threaded fittings are manufactured in accordance with ASME B16.11. The standard covers pressure-temperature ratings, dimensions, tolerances, marking, and material requirements for forged carbon and alloy steel fittings in the styles and sizes listed in Tables A2.8 and A2.9. Acceptable material forms are forgings, bars, seamless pipe, and seamless tubes which conform to the

TABLE A2.6 Pressure-Temperature Rating of Cast-Iron Pipe Flanges and Flanged Fittings (ASME B16.1-1989).

	Class 25*, ASTM A 126, Class A		Class 125, ASTM A 126				Class 250,* ASTM A 126				Class 800,* ASTM A 126, Class B
			Class A	Class B			Class A	Class B			
Temperature, °F	NPS 4–36	NPS 42–96	NPS 1–12	NPS 1–12	NPS 14–24	NPS 30–48	NPS 1–12	NPS 1–12	NPS 14–24	NPS 30–48	NPS 2–12
−20 to 150	45	25	175	200	150	150	400	500	300	300	800
200	40	25	165	190	135	115	370	460	280	250	. . .
225	35	25	155	180	130	100	355	440	270	225	. . .
250	30	25	150	175	125	85	340	415	260	200	. . .
275	25	25	145	170	120	65	325	395	250	175	. . .
300	. . .	. . .	140	165	110	50	310	375	240	150	. . .
325	. . .	. . .	130	155	105	. . .	295	355	230	125	. . .
353†	. . .	. . .	125	150	100	. . .	280	335	220	100	. . .
375	. . .	. . .	. . .	145	. . .	. . .	265	315	210	. . .	. . .
406‡	. . .	. . .	. . .	140	. . .	. . .	250	290	200	. . .	. . .
425	. . .	. . .	. . .	130	. . .	. . .	. . .	270	. . .	. . .	. . .
450	. . .	. . .	. . .	125	. . .	. . .	. . .	250	. . .	. . .	. . .

Pressure is in lb/in^2 gauge.

NPS is nominal pipe size.

Hydrostatic tests are not required unless specified by user. The test pressure is equal to 1.5 times the 100°F pressure rating.

* Limitations:

(1) Class 25. When Class 25 cast-iron flanges and flanged fittings are used for gaseous service, the maximum pressure shall be limited to 25 psig. Tabulated pressure-temperature ratings above 25 psig for Class 25 cast-iron flanges and flanged fittings are applicable for nonshock hydraulic service only.

(2) Class 250. When used for liquid service, the tabulated pressure-temperature ratings in NPS 14 and larger are applicable to Class 250 flanges only and not to Class 250 fittings.

(3) Class 800. The tabulated rating is not a steam rating and applies to nonshock hydraulic pressure only.

† 353°F (max.) to reflect the temperature of saturated steam at 125 psig.

‡ 406°F (max.) to reflect the temperature of saturated steam at 250 psig.

TABLE A2.7 Dimensions of Typical Commercial Cast-Steel Flanged Fittings (from ASME B16.5-1996)

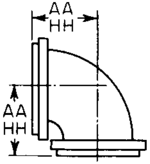

90° elbow

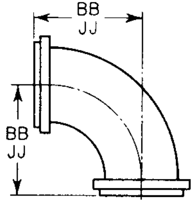

90° long radius elbow

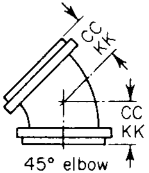

45° elbow

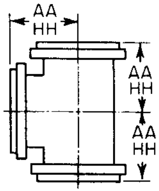

Tee

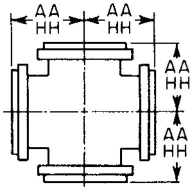

Cross

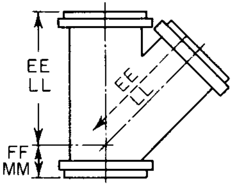

45° lateral

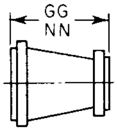

Reducer

Nominal pipe size	1⁄16-in raised-face						Ring joint							
	AA	*BB*	*CC*	*EE*	*FF*	*GG*	*HH*	*JJ*	*KK*	*LL*	*MM*	*NN*	*L**	*D*†
Class 150														
1	3½	5	1¾	5¾	1¾	4½	3¾	5¼	2	6	2	See note‡	¼	5⁄32
1¼	3¾	5½	2	6¼	1¾	4½	4	5¾	2¼	6½	2		¼	5⁄32
1½	4	6	2¼	7	2	4½	4¼	6¼	2½	7¼	2¼		¼	5⁄32
2	4½	6½	2½	8	2½	5	4¾	6¾	2¾	8¼	2¾		¼	5⁄32
2½	5	7	3	9½	2½	5½	5¼	7¼	3¼	9¾	2¾		¼	5⁄32
3	5½	7¾	3	10	3	6	5¾	8	3¼	10¼	3¼		¼	5⁄32
3½	6	8½	3½	11½	3	6½	6¼	8¾	3¾	11¾	3¼		¼	5⁄32
4	6½	9	4	12	3	7	6¾	9¼	4¼	12¼	3¼		¼	5⁄32
5	7½	10¼	4½	13½	3½	8	7¾	10½	4¾	13¾	3¾		¼	5⁄32
6	8	11½	5	14½	3½	9	8¼	11¾	5¼	14¾	3¾		¼	5⁄32
8	9	14	5½	17½	4¼	11	9¼	14¼	5¾	17¾	4¾		¼	5⁄32
10	11	16½	6½	20½	5	12	11¼	16¾	6¾	20¾	5¼		¼	5⁄32
12	12	19	7½	24½	5½	14	12¼	19¼	7¾	24¾	5¾		¼	5⁄32
14	14	21½	7½	27	6	16	14¼	21¾	7¾	27¼	6¼		¼	⅛
16	15	24	8	30	6½	18	15¼	24¼	8¼	30¼	6¾		¼	⅛
18	16½	26½	8½	32	7	19	16¾	26¾	8¾	32¼	7¼		¼	⅛
20	18	29	9½	35	8	20	18¼	29¼	9¾	35¼	8¼		¼	⅛
24	22	34	11	40½	9	24	22¼	34¼	11¼	40¾	9¼		¼	⅛

TABLE A2.7 Dimensions of Typical Commercial Cast-Steel Flanged Fittings (from ASME B16.5-1996) (*Continued*)

Nominal pipe size	1⁄16-in raised-face						Ring joint							
	AA	*BB*	*CC*	*EE*	*FF*	*GG*	*HH*	*JJ*	*KK*	*LL*	*MM*	*NN*	*L**	*D*†
Class 300														
1	4	5	2¼	6½	2	4½	4¼	5¼	2½	6¾	2¼	See note‡	¼	5⁄32
1¼	4¼	5½	2½	7¼	2¼	4½	4½	5¾	2¾	7½	2½		¼	5⁄32
1½	4½	6	2¾	8½	2½	4½	4¾	6¼	3	8¾	2¾		¼	5⁄32
2	5	6½	3	9	2½	5	5 5⁄16	6 13⁄16	3 5⁄16	9 5⁄16	2 13⁄16		5⁄16	7⁄32
2½	5½	7	3½	10½	2½	5½	5 13⁄16	7 5⁄16	3 13⁄16	10 13⁄16	2 13⁄16		5⁄16	7⁄32
3	6	7¾	3½	11	3	6	6 5⁄16	8 1⁄16	3 13⁄16	11 5⁄16	3 5⁄16		5⁄16	7⁄32
3½	6½	8½	4	12½	3	6½	6 13⁄16	8 13⁄16	4 5⁄16	12 13⁄16	3 5⁄16		5⁄16	7⁄32
4	7	9	4½	13½	3	7	7 5⁄16	9 5⁄16	4 13⁄16	13 13⁄16	3 5⁄16		5⁄16	7⁄32
5	8	10¼	5	15	3½	8	8 5⁄16	10 9⁄16	5 5⁄16	15 5⁄16	3 13⁄16		5⁄16	7⁄32
6	8½	11½	5½	17½	4	9	8 13⁄16	11 13⁄16	5 13⁄16	17 13⁄16	4 5⁄16		5⁄16	7⁄32
8	10	14	6	20½	5	11	10 5⁄16	14 5⁄16	6 5⁄16	20 13⁄16	5 5⁄16		5⁄16	7⁄32
10	11½	16½	7	24	5½	12	11 13⁄16	16 13⁄16	7 5⁄16	24 5⁄16	5 13⁄16		5⁄16	7⁄32
12	13	19	8	27½	6	14	13 5⁄16	19 5⁄16	8 5⁄16	27 13⁄16	6 5⁄16		5⁄16	7⁄32
14	15	21½	8½	31	6½	16	15 5⁄16	21 13⁄16	8 13⁄16	31 5⁄16	6 13⁄16		5⁄16	7⁄32
16	16½	24	9½	34½	7½	18	16 13⁄16	24 5⁄16	9 13⁄16	34 13⁄16	7 13⁄16		5⁄16	7⁄32
18	18	26½	10	37½	8	19	18 5⁄16	26 13⁄16	10 5⁄16	37 13⁄16	8 5⁄16		5⁄16	7⁄32
20	19½	29	10½	40½	8½	20	19⅞	29⅜	10⅞	40⅞	8⅞		⅜	7⁄32
24	22½	34	12	47½	10	24	22 15⁄16	34 7⁄16	12 7⁄16	47 15⁄16	10 7⁄16		7⁄16	¼

TABLE A2.7 Dimensions of Typical Commercial Cast-Steel Flanged Fittings (from ASME B16.5-1996) (*Continued*)

Nominal pipe size	¼-in raised-face					Ring joint						
	AA	*CC*	*EE*	*FF*	*GG*	*HH*	*KK*	*LL*	*MM*	*NN*	*L**	*D†*
Class 400 (for sizes smaller than NPS 4 use Class 600)												
4	8	5½	16	4½	8¼	8¹⁄₁₆	5⁹⁄₁₆	16¹⁄₁₆	4⁹⁄₁₆	See note‡	⁵⁄₁₆	⁷⁄₃₂
5	9	6	16¾	5	9¼	9¹⁄₁₆	6¹⁄₁₆	16¹³⁄₁₆	5¹⁄₁₆		⁵⁄₁₆	⁷⁄₃₂
6	9¾	6¼	18¾	5¼	10	9¹³⁄₁₆	6⁵⁄₁₆	18¹³⁄₁₆	5⁵⁄₁₆		⁵⁄₁₆	⁷⁄₃₂
8	11¾	6¾	22¼	5¾	12	11¹³⁄₁₆	6¹³⁄₁₆	22⁵⁄₁₆	5¹³⁄₁₆		⁵⁄₁₆	⁷⁄₃₂
10	13¼	7¾	25¾	6¼	13½	13⁵⁄₁₆	7¹³⁄₁₆	25¹³⁄₁₆	6⁵⁄₁₆		⁵⁄₁₆	⁷⁄₃₂
12	15	8¾	29¾	6½	15¼	15¹⁄₁₆	8¹³⁄₁₆	29¹³⁄₁₆	6⁹⁄₁₆		⁵⁄₁₆	⁷⁄₃₂
14	16¼	9¼	32¾	7	16½	16⁵⁄₁₆	9⁵⁄₁₆	32¹³⁄₁₆	7¹⁄₁₆		⁵⁄₁₆	⁷⁄₃₂
16	17¾	10¼	36¼	8	18½	17¹³⁄₁₆	10⁵⁄₁₆	36⁵⁄₁₆	8¹⁄₁₆		⁵⁄₁₆	⁷⁄₃₂
18	19¼	10¾	39¼	8½	19½	19⁵⁄₁₆	10¹³⁄₁₆	39⁵⁄₁₆	8⁹⁄₁₆		⁵⁄₁₆	⁷⁄₃₂
20	20¾	11¼	42¾	9	21	20⅞	11⅜	42⅞	9⅛		⅜	⁷⁄₃₂
24	24¼	12¾	50¼	10½	24½	24⁷⁄₁₆	12¹⁵⁄₁₆	50⁷⁄₁₆	10¹¹⁄₁₆		⁷⁄₁₆	¼
Class 600												
½	3¼	2	5¾	1¾	5	3⁷⁄₃₂	1³¹⁄₃₂	5²³⁄₃₂	1²³⁄₃₂	See note‡	⁷⁄₃₂	⅛
¾	3¾	2½	6¾	2	5	3¾	2½	6¾	2		¼	⁵⁄₃₂
1	4¼	2½	7¼	2¼	5	4¼	2½	7¼	2¼		¼	⁵⁄₃₂
1¼	4½	2¾	8	2½	5	4½	2¾	8	2½		¼	⁵⁄₃₂
1½	4¾	3	9	2¾	5	4¾	3	9	2¾		¼	⁵⁄₃₂
2	5¾	4¼	10¼	3½	6	5¹³⁄₁₆	4⁵⁄₁₆	10⁵⁄₁₆	3⁹⁄₁₆		⁵⁄₁₆	³⁄₁₆
2½	6½	4½	11½	3½	6¾	6⁹⁄₁₆	4⁹⁄₁₆	11⁹⁄₁₆	3⁹⁄₁₆		⁵⁄₁₆	³⁄₁₆
3	7	5	12¾	4	7¼	7¹⁄₁₆	5¹⁄₁₆	12¹³⁄₁₆	4¹⁄₁₆		⁵⁄₁₆	³⁄₁₆
3½	7½	5½	14	4½	7¾	7⁹⁄₁₆	5⁹⁄₁₆	14¹⁄₁₆	4⁹⁄₁₆		⁵⁄₁₆	³⁄₁₆
4	8½	6	16½	4½	8¾	8⁹⁄₁₆	6¹⁄₁₆	16⁹⁄₁₆	4⁹⁄₁₆		⁵⁄₁₆	³⁄₁₆
5	10	7	19½	6	10¼	10¹⁄₁₆	7¹⁄₁₆	19⁹⁄₁₆	6¹⁄₁₆		⁵⁄₁₆	³⁄₁₆
6	11	7½	21	6½	11¼	11¹⁄₁₆	7⁹⁄₁₆	21¹⁄₁₆	6⁹⁄₁₆		⁵⁄₁₆	³⁄₁₆
8	13	8½	24½	7	13¼	13¹⁄₁₆	8⁹⁄₁₆	24⁹⁄₁₆	7¹⁄₁₆		⁵⁄₁₆	³⁄₁₆
10	15½	9½	29½	8	15¾	15⁹⁄₁₆	9⁹⁄₁₆	29⁹⁄₁₆	8¹⁄₁₆		⁵⁄₁₆	³⁄₁₆
12	16½	10	31½	8½	16¾	16⁹⁄₁₆	10¹⁄₁₆	31⁹⁄₁₆	8⁹⁄₁₆		⁵⁄₁₆	³⁄₁₆
14	17½	10¾	34¼	9	17¾	17⁹⁄₁₆	10¹³⁄₁₆	34⁵⁄₁₆	9¹⁄₁₆		⁵⁄₁₆	³⁄₁₆
16	19½	11¾	38½	10	19¾	19⁹⁄₁₆	11¹³⁄₁₆	38⁹⁄₁₆	10¹⁄₁₆		⁵⁄₁₆	³⁄₁₆
18	21½	12¼	42	10½	21¾	21⁹⁄₁₆	12⁵⁄₁₆	42¹⁄₁₆	10⁹⁄₁₆		⁵⁄₁₆	³⁄₁₆
20	23½	13	45½	11	23¾	23⅝	13⅛	45⅝	11⅛		⅜	³⁄₁₆
24	27½	14¾	53	13	27¾	27¹¹⁄₁₆	14¹⁵⁄₁₆	53³⁄₁₆	13³⁄₁₆		⁷⁄₁₆	⁷⁄₃₂

TABLE A2.7 Dimensions of Typical Commercial Cast-Steel Flanged Fittings (from ASME B16.5-1996) (*Continued*)

Nominal pipe size	¼-in raised-face					Ring joint						
	AA	*CC*	*EE*	*FF*	*GG*	*HH*	*KK*	*LL*	*MM*	*NN*	*L**	*D*†
Class 900 (for sizes smaller than NPS 3 use Class 1500)												
3	7½	5½	14½	4½	7¾	7 9/16	5 9/16	14 9/16	4 9/16	See note‡	5/16	5/32
4	9	6½	17½	5½	9¼	9 1/16	6 9/16	17 9/16	5 9/16		5/16	5/32
5	11	7½	21	6½	11¼	11 1/16	7 9/16	21 1/16	6 9/16		5/16	5/32
6	12	8	22½	6½	12¼	12 1/16	8 1/16	22 9/16	6 9/16		5/16	5/32
8	14½	9	27½	7½	14¾	14 9/16	9 1/16	27 9/16	7 9/16		5/16	5/32
10	16½	10	31½	8½	16¾	16 9/16	10 1/16	31 9/16	8 9/16		5/16	5/32
12	19	11	34½	9	17¾	19 1/16	11 1/16	34 9/16	9 1/16		5/16	5/32
14	20¼	11½	36½	9½	19	20 7/16	11 11/16	36 11/16	9 11/16		7/16	5/32
16	22¼	12½	40¾	10½	21	22 7/16	12 11/16	40 15/16	10 11/16		7/16	5/32
18	24	13¼	45½	12	24½	24¼	13½	45¾	12¼		½	3/16
20	26	14½	50¼	13	26½	26¼	14¾	50½	13¼		½	3/16
24	30½	18	60	15½	30½	30⅞	18⅜	60⅜	15⅞		⅝	7/32
Class 1500												
½	4¼	3	....	....	....	4¼	3	.....	.....	See note‡	¼	5/32
¾	4½	3¼	....	....	....	4½	3¼	.....	.....		¼	5/32
1	5	3½	9	2½	5	5	3½	9	2½		¼	5/32
1¼	5½	4	10	3	5¾	5½	4	10	3		¼	5/32
1½	6	4¼	11	3½	6¼	6	4¼	11	3½		¼	5/32
2	7¼	4¾	13¼	4	7¼	7 5/16	4 13/16	13 5/16	4 1/16		5/16	⅛
2½	8¼	5¼	15¼	4½	8¼	8 5/16	5 5/16	15 5/16	4 9/16		5/16	⅛
3	9¼	5¾	17¼	5	9¼	9 5/16	5 13/16	17 5/16	5 1/16		5/16	⅛
4	10¾	7¼	19¼	6	10¾	10 13/16	7 5/16	19 5/16	6 1/16		5/16	⅛
5	13¼	8¾	23¼	7½	13¾	13 5/16	8 13/16	23 5/16	7 9/16		5/16	⅛
6	13⅞	9⅜	24⅞	8⅛	14½	14	9½	25	8¼		⅜	⅛
8	16⅜	10⅞	29⅞	9⅛	17	16 9/16	11 1/16	30 1/16	9 5/16		7/16	5/32
10	19½	12	36	10¼	20¼	19 11/16	12 3/16	36 3/16	10 7/16		7/16	5/32
12	22¼	13¼	40¾	12	23	22 9/16	13 9/16	41 1/16	12 5/16		9/16	3/16
14	24¾	14¼	44	12½	25¾	25⅛	14⅝	44⅜	12⅞		⅝	7/32
16	27¼	16¼	48¼	14¾	28¼	27 11/16	16 11/16	48 11/16	15 3/16		11/16	5/16
18	30¼	17¾	53¼	16½	31½	30 11/16	18 3/16	53 11/16	16 15/16		11/16	5/16
20	32¾	18¾	57¾	17¾	34	33 3/16	19 3/16	58 3/16	18 3/16		11/16	⅜
24	38¼	20¾	67¼	20½	39¾	38 13/16	21 5/16	67 13/16	21 1/16		13/16	7/16

* *L* = height of raised face of ring-joint flanges.

† *D* = approximate distance between flange faces when ring is compressed.

‡ Center-to-face dimensions shown for fittings with ring-joint flanges apply to straight sizes only. For reducing fittings and reducers, use dimensions shown for raised-face flanges of largest opening; Class 400 and higher classes, subtract the ¼-in raised face for each flange (do not subtract the 1/16-in raised face in Class 150 and 300); add height of ring-joint raised face (*L*) applying to each flange.

For calculating the ''laying length'' of fittings with ring joints, add the approximate distance (*D*) between flange faces when ring is compressed to the center-to-face dimensions in these tables.

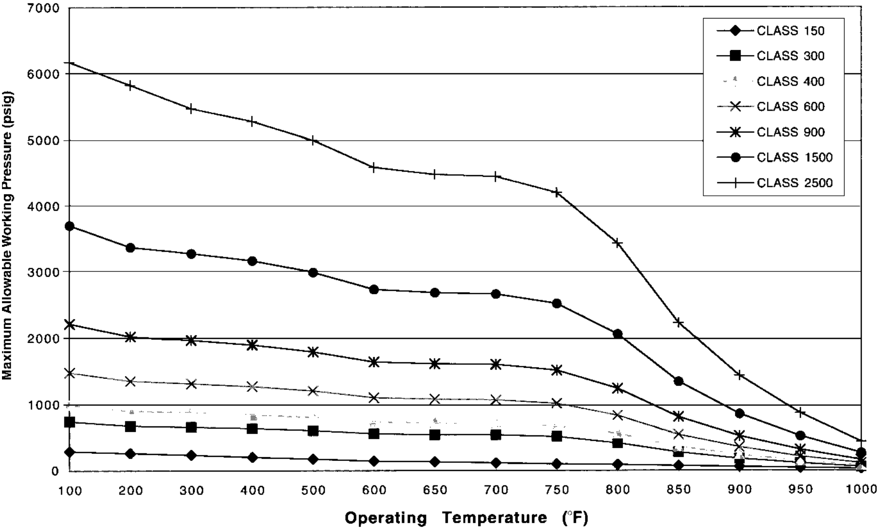

FIGURE A2.1 Operating temperature versus allowable working pressure for ASME B16.5 flanges and flanged fittings—Group 1.1 materials. (*From ASME B16.5, 1996*)

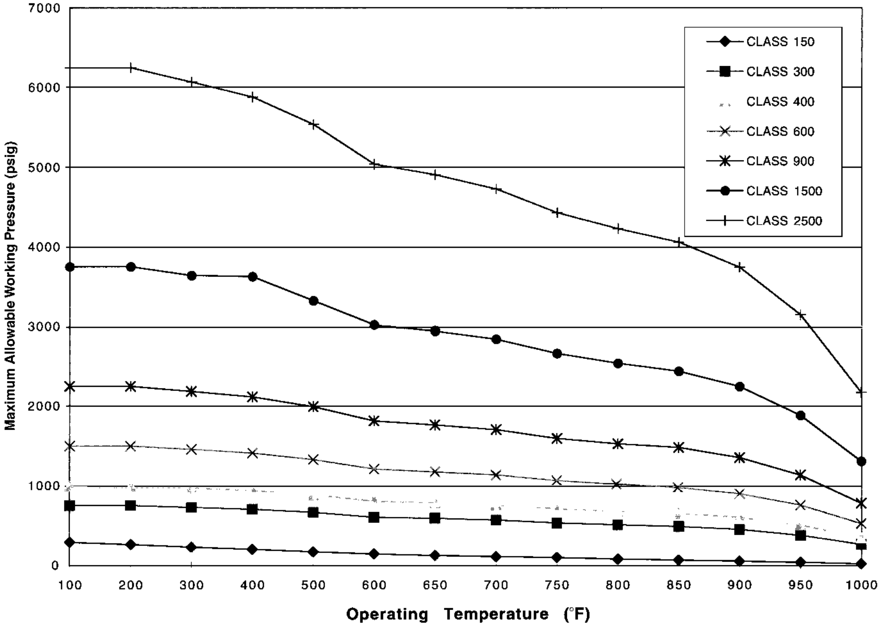

FIGURE A2.2 Operating temperature versus allowable working pressure for ASME B16.5 flanges and flanged fittings—Group 1.10 materials. (*From ASME B16.5, 1996*)

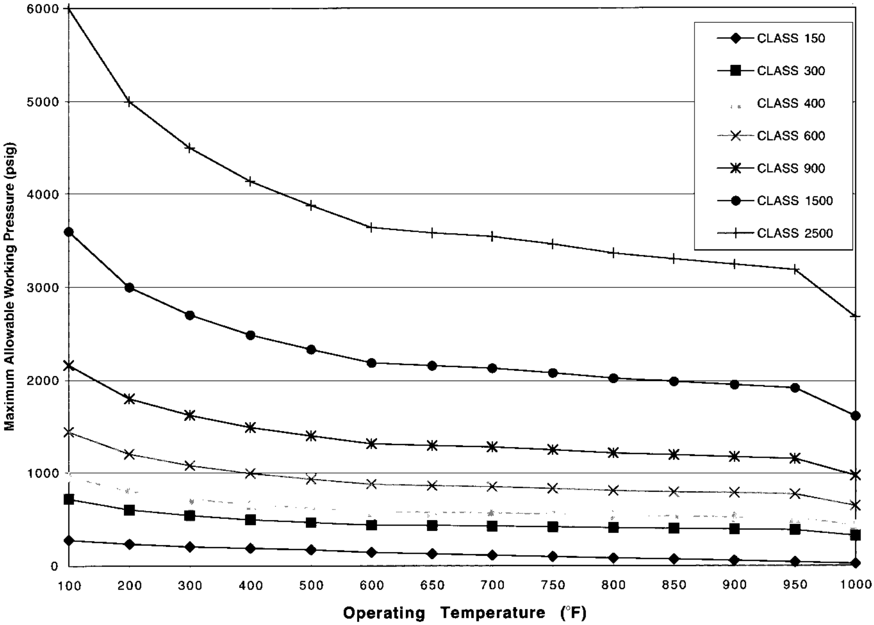

FIGURE A2.3 Operating temperature versus allowable working pressure for ASME B16.5 flanges and flanged fittings—Group 2.1 materials. (*From ASME B16.5, 1996*)

chemical compositions, melting practices, and mechanical property requirements of ASTM A105, A182, or A350.

Threaded fittings are available in pressure Classes 2000, 3000, and 6000. Socket-welded fittings are available in pressure Classes 3000, 6000, and 9000. Limitations on fitting size and service conditions are as provided for by the code governing the installation. The maximum allowable pressure of the fitting is equal to that computed for straight seamless pipe of equivalent material, considering manufacturing tolerance, corrosion allowance, and mechanical strength allowance. Also, for socket-welding fittings, the pressure rating must be matched to the pipe wall thickness to ensure that the flat of the band can accommodate the size of the fillet weld required by the applicable code. The recommended fitting pressure class for the various pipe wall thicknesses is as follows:

Pipe schedule and designation	Threaded class	Socket-welded class
80/XS or less	2000	3000
160	3000	6000
XXS	6000	9000

Internal threads of threaded fittings are in accordance with ASME B1.20.1-Pipe Threads, General Purpose (Inch).

TABLE A2.8 Dimensions of Typical Commercial Forged-Steel Threaded Fittings (ASME B16.11-1996)

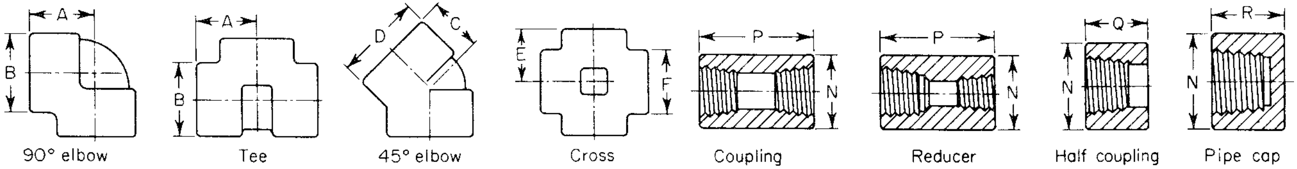

Dimensions, in

	⅛	¼	⅜	½	¾	1	1¼	1½	2	2½	3	4
Class 2000												
A	0.81	0.81	0.97	1.12	1.31	1.50	1.75	2.00	2.38	3.00	3.38	4.19
B	0.88	0.88	1.00	1.31	1.50	1.81	2.19	2.44	2.97	3.62	4.31	5.756
C	0.69	0.69	0.75	0.88	1.00	1.12	1.31	1.38	1.69	2.06	2.50	3.12
T	0.125	0.125	0.125	0.125	0.125	0.145	0.153	0.158	0.168	0.221	0.236	0.258
Class 3000												
A	0.81	0.97	1.12	1.31	1.50	1.75	2.00	2.38	2.50	3.25	3.75	4.50
B	0.88	1.00	1.31	1.50	1.81	2.19	2.44	2.97	3.31	4.00	4.75	6.00
C	0.69	0.75	0.88	1.00	1.12	1.31	1.38	1.69	1.72	2.06	2.50	3.12
T	0.125	0.13	0.138	0.161	0.170	0.196	0.208	0.219	0.281	0.301	0.348	0.440
N	0.68	0.75	0.88	1.12	1.38	1.75	2.25	2.50	3.00	3.62	4.25	4.75
P	1.25	1.38	1.50	1.88	2.00	2.38	2.62	3.12	3.38	3.62	4.25	4.75
R	0.75	1.00	1.00	1.25	1.44	1.62	1.75	1.75	1.88	2.38	2.58	2.69
Class 6000												
A	0.97	1.12	1.31	1.50	1.75	2.00	2.38	2.50	3.25	3.75	4.19	4.50
B	1.00	1.31	1.50	1.81	2.19	2.44	2.97	3.31	4.00	4.75	5.75	6.00
C	0.75	0.88	1.00	1.12	1.31	1.38	1.69	1.72	2.06	2.50	3.12	3.12
T	0.250	0.260	0.275	0.321	0.336	0.391	0.417	0.436	0.476	0.602	0.655	0.735
N	0.88	1.00	1.25	1.50	1.75	2.25	2.50	3.00	3.62	4.25	5.00	6.25
P	1.25	1.38	1.50	1.88	2.00	2.38	2.62	3.12	3.38	3.62	4.25	4.75
R	. . .	1.06	1.06	1.31	1.50	1.69	1.81	1.88	2.00	2.50	2.69	2.94

Manufacturers' catalogs should be consulted for dimensions of street elbows and of laterals since these two types of fittings are no longer covered by ANSI Standards.

TABLE A2.9 Dimensions of Typical Commercial Forged-Steel Socket-Welding Fittings* (ASME B16.11-1996)

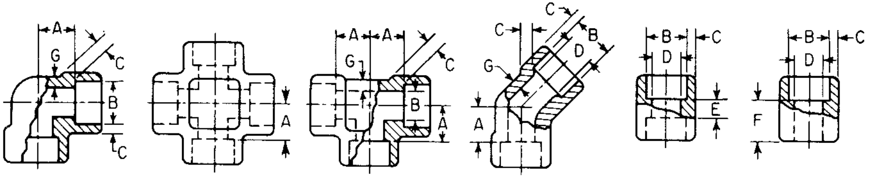

Nominal pipe size	Socket bore diameter† B	Depth of socket min.	Wall thickness, minimum						Bore diameter of fitting *D*			Center to bottom of socket (A)						Laying lengths	
			Class 3000		Class 6000		Class 9000					90° ells, tees, crosses‡			45° ells‡				
			Socket C	Body G	Socket C	Body G	Socket C	Body G	Class 3000	Class 6000	Class 9000	Class 3000	Class 6000	Class 9000	Class 3000	Class 6000	Class 9000	Couplings‡ E	Half couplings‡ F
⅛	0.420 0.430	0.38	0.125	0.095	0.135	0.124	. . .	. . .	0.254 0.284	0.141 0.171	. . .	0.44	0.44	. . .	0.31	0.31	. . .	0.25	0.62
¼	0.555 0.565	0.38	0.130	0.119	0.158	0.195	. . .	. . .	0.349 0.379	0.235 0.265	. . .	0.44	0.53	. . .	0.31	0.31	. . .	0.25	0.62
⅜	0.690 0.700	0.38	0.138	0.126	0.172	0.158	. . .	. . .	0.478 0.508	0.344 0.374	. . .	0.53	0.62	. . .	0.31	0.44	. . .	0.25	0.69
½	0.855 0.865	0.38	0.161	0.147	0.204	0.188	0.322	0.294	0.607 0.637	0.451 0.481	0.222 0.282	0.62	0.75	1.00	0.44	0.50	0.62	0.38	0.88
¾	1.065 1.075	0.50	0.168	0.154	0.238	0.219	0.337	0.308	0.809 0.839	0.599 0.629	0.404 0.464	0.75	0.88	1.12	0.50	0.56	0.75	0.38	0.94
1	1.330 1.340	0.50	0.196	0.179	0.273	0.250	0.392	0.358	1.034 1.064	0.800 0.830	0.569 0.629	0.88	1.06	1.25	0.56	0.69	0.81	0.50	1.12
1¼	1.675 1.685	0.50	0.208	0.191	0.273	0.250	0.418	0.382	1.365 1.395	1.145 1.175	0.866 0.926	1.06	1.25	1.38	0.69	0.81	0.88	0.50	1.19
1½	1.915 1.925	0.50	0.218	0.200	0.307	0.281	0.438	0.400	1.595 1.625	1.323 1.353	1.070 1.130	1.25	1.50	1.50	0.81	1.00	1.00	0.50	1.25
2	2.406 2.416	0.62	0.238	0.218	0.374	0.344	0.477	0.436	2.052 2.082	1.674 1.704	1.473 1.533	1.50	1.62	2.12	1.00	1.12	1.12	0.75	1.62
2½	2.906 2.921	0.62	0.301	0.276	. . .	0.375	. . .	. . .	2.439 2.499	. . .	. . .	1.62	. . .	. . .	1.12	. . .	. . .	0.75	1.69
3	3.535 3.550	0.62	0.327	0.300	. . .	0.438	. . .	. . .	3.038 3.098	. . .	. . .	2.25	. . .	. . .	1.25	. . .	. . .	0.75	1.75
4	4.545 4.560	0.75	0.368	0.337	. . .	0.531	. . .	. . .	3.996 4.056	. . .	. . .	2.62	. . .	. . .	1.62	. . .	. . .	0.75	1.88

---

* Dimensions for caps and reducers are not standardized. Refer to manufacturer's literature for dimensions.

† Values are lower/upper limits.

‡ For tolerances, refer to Table A2.10.

TABLE A2.10 Center-to-Bottom and Laying Length Tolerances for Classes 3000, 6000, and 9000 Socket-Welding Fittings (from ASME B16.11-1996)

NPS	Tolerances plus or minus		
	A	*E*	*F*
⅛	0.03	0.06	0.03
¼	0.03	0.06	0.03
⅜	0.06	0.12	0.06
½	0.06	0.12	0.06
¾	0.06	0.12	0.06
1	0.08	0.16	0.08
1¼	0.08	0.16	0.08
1½	0.08	0.16	0.08
2	0.08	0.16	0.08
2½	0.10	0.20	0.10
3	0.10	0.20	0.10
4	0.10	0.20	0.10

Refer to Table A2.9 for nomenclature.

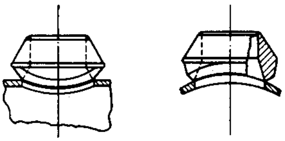

Welded 90°
outlet

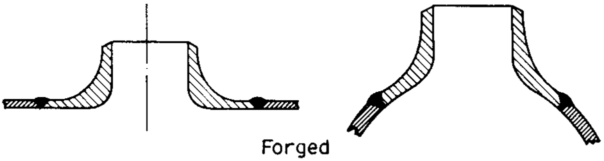

Forged
insert

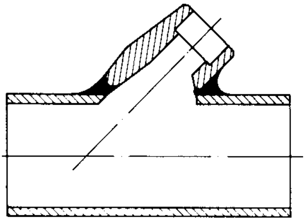

Welded
lateral

FIGURE A2.4 Typical welding outlet fittings.

TABLE A2.11 Dimensions of Typical Commercial 90° Long-Radius Butt-Welding Elbows (ASME B16.9-1993)

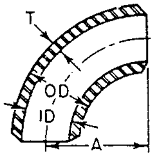

Nominal pipe size	Outside diameter (OD)	Inside diameter (ID)	Wall thickness *T*	Center to face *A*	Pipe schedule number*	Weight (approx) (lb†)
			Standard			
½	0.840	0.622	0.109	1½	40	0.2
¾	1.050	0.824	0.113	1⅛	40	0.2
1	1.315	1.049	0.133	1½	40	0.4
1¼	1.660	1.380	0.140	1⅞	40	0.6
1½	1.900	1.610	0.145	2¼	40	0.9
2	2.375	2.067	0.154	3	40	1.4
2½	2.875	2.469	0.203	3¾	40	2.9
3	3.500	3.068	0.216	4½	40	4.5
3½	4.000	3.548	0.226	5¼	40	6.4
4	4.500	4.026	0.237	6	40	8.7
5	5.563	5.047	0.258	7½	40	14.7
6	6.625	6.065	0.280	9	40	22.9
8	8.625	7.981	0.322	12	40	46.0
10	10.750	10.020	0.365	15	40	81
12	12.750	12.000	0.375	18	●‡	119
14	14.000	13.250	0.375	21	30	154
16	16.000	15.250	0.375	24	30	201
18	18.000	17.250	0.375	27	●‡	256
20	20.000	19.250	0.375	30	20	317
22	22.000	21.250	0.375	33	20	385
24	24.000	23.250	0.375	36	20	458
26	26.000	25.250	0.375	39	●‡	539
28	28.000	27.250	0.375	42	●‡	626
30	30.000	29.250	0.375	45	●‡	720
32	32.000	31.250	0.375	48	●‡	818
34	34.000	33.250	0.375	51	●‡	926
36	36.000	35.250	0.375	54	●‡	1040
42	42.000	41.250	0.375	63	●‡	1420

TABLE A2.11 Dimensions of Typical Commercial 90° Long-Radius Butt-Welding Elbows (ASME B16.9-1993) (*Continued*)

Nominal pipe size	Outside diameter (OD)	Inside diameter (ID)	Wall thickness *T*	Center to face *A*	Pipe schedule number*	Weight (approx) (lb†)
Extra strong						
½	0.840	0.546	0.147	1½	80	0.3
¾	1.050	0.742	0.154	1⅛	80	0.3
1	1.315	0.957	0.179	1½	80	0.5
1¼	1.660	1.278	0.191	1⅞	80	0.8
1½	1.900	1.500	0.200	2¼	80	1.0
2	2.375	1.939	0.218	3	80	2.0
2½	2.875	2.323	0.276	3¾	80	3.8
3	3.500	2.900	0.300	4½	80	6.1
3½	4.000	3.364	0.318	5¼	80	8.7
4	4.500	3.826	0.337	6	80	11.9
5	5.563	4.813	0.375	7½	80	20.6
6	6.625	5.761	0.432	9	80	34.1
8	8.625	7.625	0.500	12	80	69
10	10.750	9.750	0.500	15	60	109
12	12.750	11.750	0.500	18	●‡	157
14	14.000	13.000	0.500	21	●‡	202
16	16.000	15.000	0.500	24	40	265
18	18.000	17.000	0.500	27	●‡	338
20	20.000	19.000	0.500	30	30	419
22	22.000	21.000	0.500	33	30	508
24	24.000	23.000	0.500	36	●‡	606
26	26.000	25.000	0.500	39	20	713
28	28.000	27.000	0.500	42	20	829
30	30.000	29.000	0.500	45	20	953
32	32.000	31.000	0.500	48	20	1090
34	34.000	33.000	0.500	51	20	1230
36	36.000	35.000	0.500	54	20	1380
42	42.000	41.000	0.500	63	●‡	1880
Schedule 160†						
1	1.315	0.815	0.250	1½	160	0.6
1¼	1.660	1.160	0.250	1⅞	160	1.0
1½	1.900	1.338	0.281	2¼	160	1.4
2	2.375	1.689	0.343	3	160	2.9
2½	2.875	2.125	0.375	3¾	160	4.9
3	3.500	2.624	0.438	4½	160	8.3
4	4.500	3.438	0.531	6	160	17.6
5	5.563	4.313	0.625	7½	160	32.2
6	6.625	5.189	0.718	9	160	53
8	8.625	6.813	0.906	12	160	117
10	10.750	8.500	1.125	15	160	226
12	12.750	10.126	1.312	18	160	375

TABLE A2.11 Dimensions of Typical Commercial 90° Long-Radius Butt-Welding Elbows (ASME B16.9-1993) (*Continued*)

Nominal pipe size	Outside diameter (OD)	Inside diameter (ID)	Wall thickness *T*	Center to face *A*	Pipe schedule number*	Weight (approx) (lb†)
			Double extra strong			
¾	1.050	0.434	0.308	1⅛	●‡	0.4
1	1.315	0.599	0.358	1½	●‡	0.7
1¼	1.660	0.896	0.382	1⅞	●‡	1.2
1½	1.900	1.100	0.400	2¼	●‡	1.8
2	2.375	1.503	0.436	3	●‡	3.4
2½	2.875	1.771	0.552	3¾	●‡	6.5
3	3.500	2.300	0.600	4½	●‡	10.7
3½	4.000	2.728	0.636	5¼	●‡	15.4
4	4.500	3.152	0.674	6	●‡	21.2
5	5.563	4.063	0.750	7½	●‡	37.2
6	6.625	4.897	0.864	9	●‡	61
8	8.625	6.875	0.875	12	●‡	114

* Pipe schedule numbers in accordance with ASME B36.10M.

† Weights are not tabulated in ASME B16.9.

‡ This size and thickness does not correspond with any schedule number.

Wrought-Steel Butt-Welding Fittings

Wrought-steel welding fittings include elbows, tees, crosses, reducers, laterals, lap-joint stub ends, caps, and saddles.

Wrought-steel fittings are made to the dimensional requirements of ASME B16.9 in sizes NPS ½ (DN 15) through NPS 48 (DN 1200). Also, short-radius elbows and returns are produced in accordance with ASME B16.28 in sizes NPS ½ (DN 15) through NPS 24 (DN 600). The wrought fitting materials conform to ASTM A234, A403, or A420, the grades of which have chemical and physical properties equivalent to that of the mating pipe. ASME B16.9 requires that the pressure-temperature rating of the fitting equal or exceed that of the mating pipe of the same or equivalent material, same size, and same nominal wall thickness. The pressure-temperature rating may be established by analysis or by proof testing. Short-radius elbows and returns (fitting centerline bend radius is equal to the fitting NPS) manufactured under ASME B16.28 are rated at 80 percent of the rating calculated for seamless straight pipe of the same size and nominal thickness and same or equivalent material. Therefore, both standards require that, in lieu of specifying any pressure rating, the pipe wall thickness and pipe material type with which the fittings are intended to be used be identified on the fitting.

Pressure testing of the fittings is not required by either standard. However, the fittings are required to be capable of withstanding, without leakage, a test pressure equal to that prescribed in the specification of the pipe with which the fitting is recommended to be used.

Both ASME B16.9 and B16.28 prescribe dimensions and manufacturing tolerances of wrought butt-welded fittings. The standards establish laying dimensions,

TABLE A2.12 Dimensions of Typical Commercial 90° Short-Radius Elbows (ASME B16.28-1994)

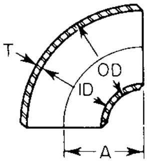

Nominal pipe size	Outside diameter (OD)	Inside diameter (ID)	Wall thickness *T*	Center to face *A*	Pipe schedule number*	Weight (approx) (lb†)
			Standard			
1	1.315	1.049	0.133	1	40	0.3
1¼	1.660	1.380	0.140	1¼	40	0.4
1½	1.900	1.610	0.145	1½	40	0.6
2	2.375	2.067	0.154	2	40	1.0
2½	2.875	2.469	0.203	2½	40	1.9
3	3.500	3.068	0.216	3	40	3.0
3½	4.000	3.548	0.226	3½	40	4.2
4	4.500	4.026	0.237	4	40	5.7
5	5.563	5.047	0.258	5	40	9.7
6	6.625	6.065	0.280	6	40	15.2
8	8.625	7.981	0.322	8	40	30.5
10	10.750	10.020	0.365	10	40	54
12	12.750	12.000	0.375	12	●‡	79
14	14.000	13.250	0.375	14	30	102
16	16.000	15.250	0.375	16	30	135
18	18.000	17.250	0.375	18	●‡	171
20	20.000	19.250	0.375	20	20	212
22	22.000	21.250	0.375	22	●‡	256
24	24.000	23.250	0.375	24	20	305
26§	26.000	25.250	0.375	26	●‡	359
28	28.000	27.250	0.375	28	●‡	415
30	30.000	29.250	0.375	30	●‡	480
32	32.000	31.250	0.375	32	●‡	546
34	34.000	33.250	0.375	34	●‡	617
36	36.000	35.250	0.375	36	●‡	692
42	42.000	41.250	0.375	48	●‡	1079

TABLE A2.12 Dimensions of Typical Commercial 90° Short-Radius Elbows (ASME B16.28-1994) (*Continued*)

Nominal pipe size	Outside diameter (OD)	Inside diameter (ID)	Wall thickness *T*	Center to face *A*	Pipe schedule number*	Weight (approx) (lb†)
			Extra strong			
1½	1.900	1.500	0.200	1½	80	0.7
2	2.375	1.939	0.218	2	80	1.3
2½	2.875	2.323	0.276	2½	80	2.5
3	3.500	2.900	0.300	3	80	4.0
3½	4.000	3.364	0.318	3½	80	5.7
4	4.500	3.826	0.337	4	80	7.8
5	5.563	4.813	0.375	5	80	13.7
6	6.625	5.761	0.432	6	80	22.6
8	8.625	7.625	0.500	8	80	45.6
10	10.750	9.750	0.500	10	60	72
12	12.750	11.750	0.500	12	●‡	104
14	14.000	13.000	0.500	14	●‡	135
16	16.000	15.000	0.500	16	40	177
18	18.000	17.000	0.500	18	●‡	225
20	20.000	19.000	0.500	20	30	278
22	22.000	21.000	0.500	22	30	333
24	24.000	23.000	0.500	24	●‡	404
26§	26.000	25.000	0.500	26	20	474
28	28.000	27.000	0.500	28	20	581
30	30.000	29.000	0.500	30	20	634
32	32.000	31.000	0.500	32	20	722
34	34.000	33.000	0.500	34	20	817
36	36.000	35.000	0.500	36	20	913
42	42.000	41.000	0.500	42	●‡	1430

* Pipe schedule numbers in accordance with ASME B36.10M.

† Filling weights are not tabulated in ASME B16.28.

‡ This size and thickness has no corresponding schedule number.

§ Dimensional data for pipe sizes NPS 26 and larger are not included in ASME B16.28.

which remain fixed for each size and type of fitting irrespective of the fitting wall thickness. Tables A2.11, A2.12, A2.13, A2.14, and A2.15 list the laying dimensions and approximate weights for selected fitting sizes, pipe schedules, and configurations.

Laterals are not governed by any national standard. However, dimensions of laterals commonly used are given in Table A2.16. Working pressures are rated at 40 percent of the allowable working pressure established for pipe from which laterals are made. Where full allowable pipe pressures must be met, the laterals are generally made from heavier pipe with ends machined to match standard pipe dimensions. Dimensional tolerances of laterals vary not more than ±1/32 in (1.0 mm) for sizes up to and including NPS 8 (DN 200) and ±1/16 in (2.0 mm) for sizes NPS 10 (DN 250) through NPS 24 (DN 600).

TABLE A2.13 Dimensions of Typical Commercial Straight Butt-Welding Tees (ASME B16.9-1993)

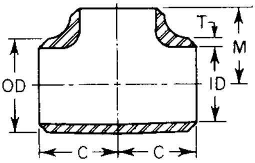

Nominal pipe size	Outside diameter (OD)	Inside diameter (ID)	Wall thickness *T*	Center to end *C*	Center to end *M*	Pipe schedule number*	Weight (approx) (lb†)
Standard							
½	0.840	0.622	0.109	1	1	40	0.3
¾	1.050	0.824	0.113	1⅛	1⅛	40	0.4
1	1.315	1.049	0.133	1½	1½	40	0.8
1¼	1.660	1.380	0.140	1⅞	1⅞	40	1.3
1½	1.900	1.610	0.145	2¼	2¼	40	2.0
2	2.375	2.067	0.154	2½	2½	40	2.9
2½	2.875	2.469	0.203	3	3	40	5.2
3	3.500	3.068	0.216	3⅜	3⅜	40	7.4
3½	4.000	3.548	0.226	3¾	3¾	40	9.8
4	4.500	4.026	0.237	4⅛	4⅛	40	12.6
5	5.563	5.047	0.258	4⅞	4⅞	40	19.8
6	6.625	6.065	0.280	5⅝	5⅝	40	29.3
8	8.625	7.981	0.322	7	7	40	53
10	10.750	10.020	0.365	8½	8½	40	91
12	12.750	12.000	0.375	10	10	●‡	132
14	14.000	13.250	0.375	11	11	30	172
16	16.000	15.250	0.375	12	12	30	219
18	18.000	17.250	0.375	13½	13½	●‡	282
20	20.000	19.250	0.375	15	15	20	354
22	22.000	21.250	0.375	16½	16½	20	437
24	24.000	23.250	0.375	17	17	20	493
26	26.000	25.250	0.375	19½	19½	●‡	634
28	28.000	27.250	0.375	20½	20½	●‡	729
30	30.000	29.250	0.375	22	22	●‡	855
32	32.000	31.250	0.375	23½	23½	●‡	991
34	34.000	33.250	0.375	25	25	●‡	1136
36	36.000	32.250	0.375	26½	26½	●‡	1294

TABLE A2.13 Dimensions of Typical Commercial Straight Butt-Welding Tees (ASME B16.9-1993) (*Continued*)

Nominal pipe size	Outside diameter (OD)	Inside diameter (ID)	Wall thickness *T*	Center to end *C*	Center to end *M*	Pipe schedule number*	Weight (approx) (lb†)
Extra strong							
½	0.840	0.546	0.147	1	1	80	0.3
¾	1.050	0.742	0.154	1⅛	1⅛	80	0.5
1	1.315	0.957	0.179	1½	1½	80	0.9
1¼	1.660	1.278	0.191	1⅞	1⅞	80	1.6
1½	1.900	1.500	0.200	2¼	2¼	80	2.4
2	2.375	1.939	0.218	2½	2½	80	3.7
2½	2.875	2.323	0.276	3	3	80	6.4
3	3.500	2.900	0.300	3⅜	3⅜	80	9.4
3½	4.000	3.364	0.318	3¾	3¾	80	12.6
4	4.500	3.826	0.337	4⅛	4⅛	80	16.4
5	5.563	4.813	0.375	4⅞	4⅞	80	26.4
6	6.625	5.761	0.432	5⅝	5⅝	80	42.0
8	8.625	7.625	0.500	7	7	80	76
10	10.750	9.750	0.500	8½	8½	60	118
12	12.750	11.750	0.500	10	10	●‡	167
14	14.000	13.000	0.500	11	11	●‡	203
16	16.000	15.000	0.500	12	12	40	271
18	18.000	17.000	0.500	13½	13½	●‡	351
20	20.000	19.000	0.500	15	15	30	442
22	22.000	21.000	0.500	16½	16½	30	548
24	24.000	23.000	0.500	17	17	20	607
26	26.000	25.000	0.500	19½	19½	20	794
28	28.000	27.000	0.500	20½	20½	20	910
30	30.000	29.000	0.500	22	22	20	1065
32	32.000	31.000	0.500	23½	23½	20	1230
34	34.000	33.000	0.500	25	25	20	1420
36	36.000	35.000	0.500	26½	26½	20	1610
Schedule 160*							
½	0.840	0.466	0.187	1	1	160	0.4
¾	1.050	0.614	0.218	1⅛	1⅛	160	0.6
1	1.315	0.815	0.250	1½	1½	160	1.1
1¼	1.660	1.160	0.250	1⅞	1⅞	160	1.9
1½	1.900	1.338	0.281	2¼	2¼	160	3.0
2	2.375	1.689	0.343	2½	2½	160	4.9
2½	2.875	2.125	0.375	3	3	160	7.8
3	3.500	2.626	0.438	3⅜	3⅜	160	12.2
4	4.500	3.438	0.531	4⅛	4⅛	160	22.8
5	5.563	4.313	0.625	4⅞	4⅞	160	38.5
6	6.625	5.189	0.718	5⅝	5⅝	160	59
8	8.625	6.813	0.906	7	7	160	120
10	10.750	8.500	1.125	8¼	8½	160	222
12	12.750	10.126	1.312	10	10	160	360

TABLE A2.13 Dimensions of Typical Commercial Straight Butt-Welding Tees (ASME B16.9-1993) (*Continued*)

Nominal pipe size	Outside diameter (OD)	Inside diameter (ID)	Wall thickness *T*	Center to end *C*	Center to end *M*	Pipe schedule number*	Weight (approx) (lb†)
			Double extra strong				
½	0.840	0.252	0.294	1	1	●‡	0.4
¾	1.050	0.434	0.308	1⅛	1⅛	●‡	0.6
1	1.315	0.599	0.358	1½	1½	●‡	1.3
1¼	1.660	0.896	0.382	1⅞	1⅞	●‡	2.4
1½	1.900	1.100	0.400	2¼	2¼	●‡	3.7
2	2.375	1.503	0.436	2½	2½	●‡	5.7
2½	2.875	1.771	0.552	3	3	●‡	9.8
3	3.500	2.300	0.600	3⅜	3⅜	●‡	14.8
3½	4.000	2.728	0.636	3¾	3¾	●‡	20.2
4	4.500	3.152	0.674	4⅛	4⅛	●‡	26.6
5	5.563	4.063	0.750	4⅞	4⅞	●‡	43.4
6	6.625	4.897	0.864	5⅝	5⅝	●‡	68
8	8.625	6.875	0.875	7	7	●‡	118

* Pipe schedule numbers in accordance with ASME B36.10M. Other thicknesses available.
† Fitting weights are not tabulated in ASME B16.9.
‡ This size and thickness does not correspond with any schedule number.

Forged Branch Fittings

Under the various pressure piping codes, branch connections may be made by welding the branch pipe or a welding outlet fitting to the run pipe, provided sufficient reinforcement is available to compensate for the material removed from the run pipe to create the branch opening. The reinforcement may be in the form of excess material already available in the run and branch pipes, or it may be added. At the writing of this book, national standards governing the dimensions, tolerances, and manufacture of welding outlet fittings had not been issued. However, MSS-SP-97, 1995, has been developed to cover forged-carbon-steel 90° branch outlet fittings in butt-welding, socket-welding, and threaded outlet ends. The standard provides essential dimensions, finish, tolerances, and testing requirements. Because of the absence of strict standards, manufacturers produce welding outlet fittings of their own proprietary designs. These fittings must comply with the codes governing the systems in which the fittings are to be installed. The fittings, when installed in accordance with the manufacturers' recommendations, include the required reinforcement. The dimensions of these fittings vary; standardized dimensions and properties must be obtained from the manufacturers. Also, designers must consider the appropriate parameters (e.g., stress intensification factors). Figure A2.4 shows several types of welding fittings, which are proprietary; the terminology used varies with the manufacturer. The fittings are produced in carbon and alloy steels under the ASTM specifications for forgings permitted by applicable codes.

TABLE A2.14 Dimensions of Typical Commercial Concentric and Eccentric Butt-Welding Reducers (ASME B16.9-1993)

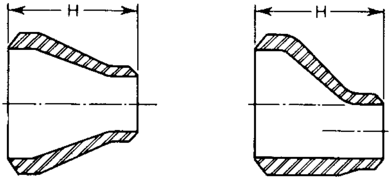

Concentric Eccentric

Nominal pipe size	Length *H*	Weight (approx), lb (concentric or eccentric)			
		Standard	Extra strong	Schedule 160	Double extra strong
¾ × ⅜	1½	0.2	0.3	0.3	. . .
½	1½	0.2	0.3	0.3	0.4
1 × ⅜	2	0.3	0.4	0.4	0.4
½	2	0.3	0.4	0.5	0.5
¾	2	0.3	0.4	0.5	0.5
1¼ × ½	2	0.5	0.5	0.6	0.7
¾	2	0.5	0.5	0.6	0.7
1	2	0.5	0.6	0.7	0.8
1½ × ½	2½	0.5	0.6	0.8	1.0
¾	2½	0.5	0.6	0.9	1.0
1	2½	0.6	0.7	0.9	1.0
1¼	2½	0.6	0.8	1.0	1.2
2 × ¾	3	0.8	1.0	1.4	1.7
1	3	0.9	1.0	1.4	1.6
1¼	3	0.9	1.1	1.4	1.8
1½	3	0.9	1.2	1.6	1.9
2½ × 1	3½	1.3	1.7	2.3	3.0
1¼	3½	1.4	1.7	2.2	3.1
1½	3½	1.5	1.8	2.2	3.0
2	3½	1.6	2.0	2.7	3.3
3 × 1¼	3½	1.7	2.2	3.1	4.1
1½	3½	1.8	2.1	3.1	4.0
2	3½	2.0	2.6	3.4	4.0
2½	3½	2.1	2.8	3.7	4.6
3½ × 1¼	4	2.3	3.2	. . .	5.8
1½	4	2.5	3.1	. . .	5.8
2	4	2.7	3.5	. . .	5.7
2½	4	2.9	3.8	. . .	5.9
3	4	3.0	4.0	. . .	6.8

TABLE A2.14 Dimensions of Typical Commercial Concentric and Eccentric Butt-Welding Reducers (ASME B16.9-1993) (*Continued*)

Nominal pipe size	Length *H*	Weight (approx), lb (concentric or eccentric)			
		Standard	Extra strong	Schedule 160	Double extra strong
4 × 1½	4	2.7	3.8	5.6	6.6
2	4	3.1	3.9	5.6	6.6
2½	4	3.3	4.4	5.5	6.3
3	4	3.5	4.7	6.5	7.7
3½	4	3.6	4.8	. . .	8.2
5 × 2	5	5.0	6.6	10.6	12.2
2½	5	5.5	7.2	10.2	11.7
3	5	5.7	7.8	10.2	11.1
3½	5	5.8	8.0	. . .	13.3
4	5	5.9	8.3	12.4	14.2
6 × 2½	5½	7.6	9.9	15.8	18.8
3	5½	8.0	11.1	15.1	18.5
3½	5½	8.1	11.6	. . .	17.3
4	5½	8.1	12.0	17.2	19.1
5	5½	8.6	12.6	18.8	21.4
8 × 3½	6	12.8	16.1	. . .	27.9
4	6	13.1	18.6	26.9	25.7
5	6	13.4	19.5	29.6	29.2
6½	6	13.9	20.4	32.1	32.7
10 × 4	7	21.1	25.3	50	
5	7	21.8	28.7	48	
6	7	22.3	29.8	50	
8	7	23.2	31.4	58	
12 × 5	8	30.5	39.1	78	
6	8	31.1	40.6	75	
8	8	32.1	37.4	86	
10	8	33.4	43.6	94	
14 × 6	13	55	74		
8	13	57	76		
10	13	60	79		
12	13	63	83		

TABLE A2.15 Dimensions of Typical Commercial Butt-Welding Standard Caps (ASME B16.9-1993 Except as Noted)

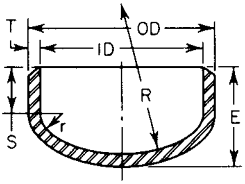

Nominal pipe size	Outside diameter (OD)	Inside diameter (ID)	Wall thickness *T*	Length *E*	Tangent *S*	Dish radius *R*	Knuckle radius *r*	Pipe schedule number*	Weight (approx) (lb)
½	0.840	0.622	0.109	1	0.74	0.54	0.10	40	0.1
¾	1.050	0.824	0.113	1¼	0.93	0.72	0.14	40	0.2
1	1.315	1.049	0.133	1½	1.10	0.92	0.17	40	0.3
1¼	1.660	1.380	0.140	1½	1.02	1.35	0.23	40	0.4
1½	1.900	1.610	0.145	1½	0.95	1.41	0.27	40	0.4
2	2.375	2.067	0.154	1½	0.83	1.81	0.34	40	0.6
2½	2.875	2.469	0.203	1½	0.68	2.15	0.41	40	0.9
3	3.500	3.068	0.216	2	1.02	2.69	0.51	40	1.4
3½	4.000	3.548	0.226	2½	1.39	3.11	0.59	40	2.1
4	4.500	4.026	0.237	2½	1.26	3.52	0.67	40	2.5
5	5.563	5.047	0.258	3	1.48	4.42	0.84	40	4.2
6	6.625	6.065	0.280	3½	1.70	5.31	1.01	40	6.4
8	8.625	7.981	0.322	4	1.68	6.98	1.33	40	11.3
10	10.750	10.020	0.365	5	2.13	8.77	1.67	40	20.0
12	12.750	12.000	0.375	6	2.62	10.50	2.00	▲†	29.5
14	14.000	13.250	0.375	6½	2.81	11.60	2.21	30	35.3
16	16.000	15.250	0.375	7	2.81	13.34	2.54	30	44.3
18	18.000	17.250	0.375	8	3.31	15.08	2.88	▲†	57
20	20.000	19.250	0.375	9	3.81	16.84	3.21	20	71
22	22.000	21.250	0.375	10	4.31	18.60	3.54	20	86
24	24.000	23.250	0.375	10½	4.31	20.35	3.88	20	102
26	26.000	25.250	0.375	10½	3.81	22.10	4.21	▲†	110
28	28.000	27.250	0.375	10½	3.31	23.85	4.54	▲†	120
30	30.000	29.250	0.375	10½	2.81	25.60	4.88	▲†	125
32	32.000	31.250	0.375	10½	2.31	27.35	5.21	▲†	145
34	34.000	33.250	0.375	10½	1.81	29.10	5.54	▲†	160
36	36.000	35.250	0.375	10½	1.31	30.85	5.88	▲†	175
42	42.000	41.250	0.375	12	1.31	36.10	6.88	▲†	230

* Pipe schedule numbers in accordance with ASME B36.10M.
† This size and thickness does not correspond with any schedule number.

TABLE A2.16 Dimensions of Typical Commercial Butt-Welding Laterals

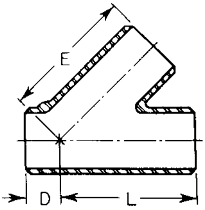

Nominal pipe size	Standard		Weight (approx) (lb)	Extra strong		Weight (approx) (lb)
	L and *E*	*D*		*L* and *E*	*D*	
Straight						
1	5¾	1¾	1.7	6½	2	2.5
1¼	6¼	1¾	2.4	7¼	1¼	3.8
1½	7	2	3.2	8½	2½	5.4
2	8	2½	5.0	9	2½	7.7
2½	9½	2½	9.2	10½	2½	13.5
3	10	3	12.6	11	3	18.8
3½	11½	3	17.2	12½	3	25.6
4	12	3	20.8	13½	3	32.8
5	13½	3½	31.4	15	3½	49.8
6	14½	3½	42.4	17½	4	79
8	17½	4½	76	20½	5	140
10	20½	5	124	24	5½	202
12	24½	5½	180	27½	6	273
14	27	6	218	31	6½	340
16	30	6½	275	34½	7½	433
18	32	7	326	37½	8	526
20	35	8	396	40½	8½	628
24	40½	9	544	47½	10	882

TRAPS

Steam Traps

The function of a steam trap is to discharge condensate from steam piping or steam heating equipment without permitting live steam to escape. Some principal types of steam traps are:

- Float
- Thermostatic
- Thermodynamic
- Inverted bucket

The float type (Fig. A2.5) consists of a chamber containing a float-and-arm mechanism which modulates the position of a discharge valve. As the level of condensate in the trap rises, the valve is opened to emit the condensate. This type of valve tends to discharge a steady stream of liquid since the valve position is proportional to the rate of incoming condensate. Because the discharge valve is below the waterline, float-type steam traps must employ a venting system to discharge noncondensable gases. This is generally accomplished with a thermostatic element which opens a valve when cooler noncondensable gases are present but closes the valve in the presence of hotter steam. The thermostatic steam trap (Fig. A2.6) contains a thermostatic element which opens and closes a valve in response to fluid temperature. Condensate collected upstream of the valve is subcooled, cooling the thermostat, which, in turn, exposes the discharge port. When the cooler condensate is discharged and the incoming condensate temperature approaches the saturation temperature, the thermostat closes the discharge port. Because of its principle of operations, the thermostatic trap operates intermittently under all but maximum condensate loads.

The *inverted bucket* steam trap (Fig. A2.7) consists of a chamber containing an inverted bucket (the opening at the bottom) which actuates a discharge valve through a linkage. The valve is open when the bucket rests at the bottom of the trap. This allows air to escape during warm-up until the bottom of the bucket is sealed by rising condensate. The valve remains open as long as condensate is flowing, and trapped air bleeds out through a small vent in the top of the bucket. When steam enters the trap, it fills the bucket, causing the bucket to float so it rises and closes the valve. The steam slowly escapes through the bucket vent and condenses, thus allowing the bucket to sink and reopen the valve for condensate flow. Small amounts of air and noncondensable

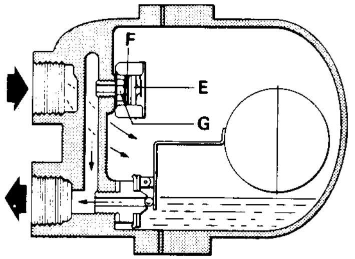

FIGURE A2.5 Float steam trap. (*Spirax Sarco Inc.*)

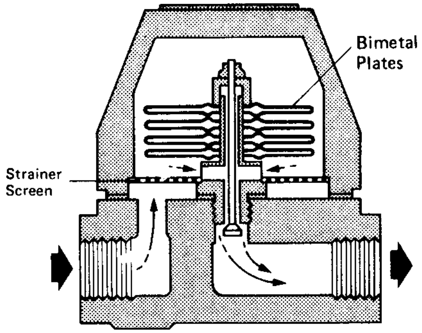

Trap Strainer Unit

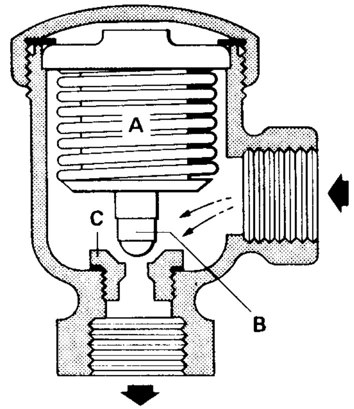

Balanced Pressure Thermostatic Trap

FIGURE A2.6 Thermostatic steam trap. (*a*) Trap strainer unit; (*b*) balanced pressure thermostatic trap. (*Spirax Sarco Inc.*)

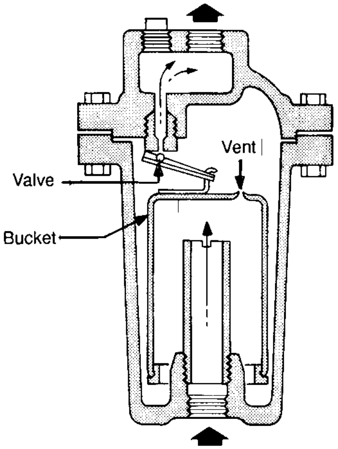

FIGURE A2.7 Inverted bucket steam trap. (*Spirax Sarco Inc.*)

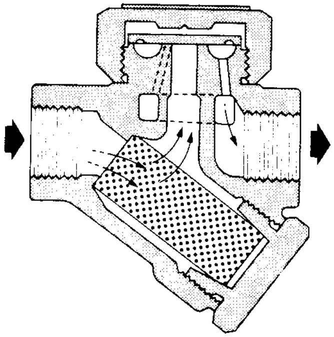

FIGURE A2.8 Thermodynamic steam trap (with integral strainer). (*Spirax Sarco Inc.*)

gases (such as carbon dioxide) that enter the trap during normal operation are also vented through the small opening in the top of the bucket, which prevents the trap from becoming air-bound.

The *thermodynamic steam* trap is illustrated in Fig. A2.8. In this type of trap, flashing of the hot condensate tends to force a small piston into the discharge opening when the temperature of the condensate approaches within about 30°F (15°C) of the saturation temperature. As soon as the condensate collected in the drain system cools sufficiently below the flash temperature, the trap opens and discharges the accumulated water until the temperature of the condensate once more approaches the saturation temperature and flashes, thereby closing the trap and again repeating the cycle. A small orifice permits a continuous discharge of steam, flashed vapor, or noncondensable gas when the trap is closed.

Single orifices are sometimes used to remove condensate from high-pressure, high-temperature steam lines. Where the drains are required only in bringing the line up to temperature, the use of orifices, in conjunction with valves, is particularly desirable.

Air (drain) traps are used to discharge condensed liquid—from a gas system. The drain trap operates on the same principle as the float steam trap does, except that the drain trap does not contain a thermostatic clement.

STRAINERS

Strainers are used in piping systems to protect equipment sensitive to dirt and other particles that may be carried by the fluid. During system start-up and flushing, strainers may be placed upstream of pumps to protect them from construction debris that may have been left in the pipe. Figure A2.9 depicts a typical start-up strainer. Permanent strainers may be installed upstream of control valves, traps, and instrutments to protect them from corrosion products that may become dislodged and carried throughout the piping system.

Strainers are available in a variety of styles, including wye and basket.

The *wye strainer* (Fig. A2.10) is generally used upstream of traps, control valves, and instruments. The wye strainer resembles a lateral branch fitting with the strainer element installed in the branch. The end of the lateral branch is removable, to permit servicing of the strainer. Also, a blow-off connection may be provided in the end cap to flush the strainer.

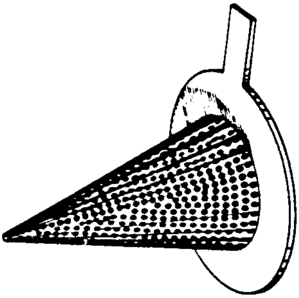

FIGURE A2.9 Conical start-up strainer.

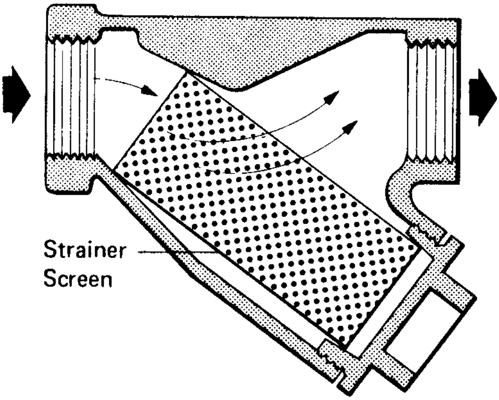

FIGURE A2.10 Wye strainer.

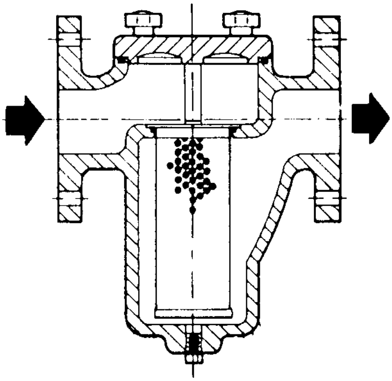

FIGURE A2.11 Basket strainer.

Basket strainers (Fig. A2.11) are generally used where high flow capacity is required. The basket strainer is serviced by removing the cover, which yields access to the basket. Basket strainers are also available in a duplex style which consists of two parallel basket strainers and diverting valves, which permit diversion of the flow through one of the strainer elements while the other element is being serviced—an essential feature where flow cannot be interrupted.

EXPANSION JOINTS

Expansion joints are used in piping systems to absorb thermal expansion where the use of expansion loops is undesirable or impractical. Expansion joints are available in slip, ball, metal bellows, and rubber bellows configurations.

Slip-type expansion joints (Fig. A2.12a) have a sleeve that telescopes into the body. Leakage is controlled by packing located between the sleeve and the body. Leakage is minimal and can be near zero in many applications. A completely leak-free seal cannot be ensured; thus these expansion joints are ruled out where zero leakage is required. The packing is subject to wear due to cyclic movement of the sleeve when connected piping expands and contracts. Thus, these joints require periodic maintenance, either to compress the packing by tightening a packing gland or to replace or replenish the packing. Replacement of the packing rings is necessary when leakage develops in a joint that has an adjustable packing gland which has been tightened to its limit. Some designs provide for packing replenishment rather than replacement. These are usually called *gun-packed* or *ram-packed* slip joints. Since the packing can wear away, some packing material may be picked up in the line fluid. This rules out the use of slip joints in systems, where such contamination of fluid cannot be tolerated.

Slip-type expansion joints are particularly suited for lines having straight-line (axial) movements of large magnitude. Slip joints cannot tolerate lateral offset or angular rotation (cocking) since this would cause binding, galling, and possibly leakage due to packing distortion. Therefore, the use of proper pipe alignment guides is essential.

Ball expansion joints (Fig. A2.12b) consist of a socket and ball with a sealing mechanism placed between them. The seals are of rigid materials, and in some designs a pliable sealant may be injected into the cavity located between the ball and socket. The joints are capable of absorbing angular and axial rotation; however, they cannot accommodate movement along the longitudinal axis of the joint. Therefore, an offset must be installed in the line to absorb pipe axial movement.

Bellows-type expansion joints (Fig. A2.13) do not have packing; thus they do not have the potential leakage or fluid contamination problems sometimes associated with slip joints. Likewise, they do not require the periodic maintenance (lubrication and repacking) that is associated with slip joints. Bellows joints absorb expansion and contraction by means of a flexible bellows that is compressed or extended. They can also accommodate direction changes by various combinations of compression on one side and extension on an opposing side. Thus, they can adjust to lateral offset and angular rotation of the connected piping. However, they are not capable of absorbing torsional movement. Typically, the bellows is corrugated metal and is welded to the end pieces. To provide the requisite flexibility, the metal bellows is considerably thinner than the associated piping. Thus these expansion joints are especially susceptible to rupture by overpressure. A bellows can also fail because of metal fatigue if the accumulated flexing cycles exceed the designed fatigue life

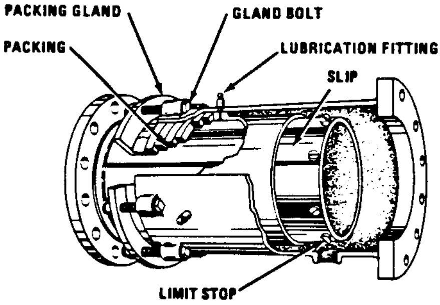
PACKING GLAND
GLAND BOLT
PACKING
LUBRICATION FITTING
SLIP
LIMIT STOP

SINGLE-ENDED SLIP-TYPE EXPANSION JOINT WITH ADJUSTABLE PACKING GLAND

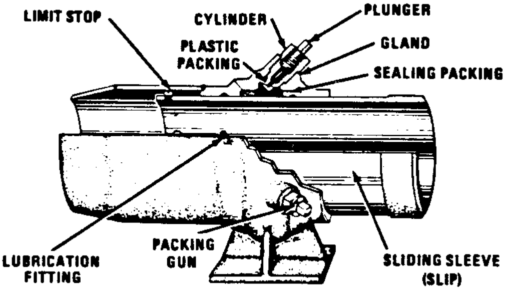
LIMIT STOP
CYLINDER
PLUNGER
PLASTIC PACKING
GLAND
SEALING PACKING
LUBRICATION FITTING
PACKING GUN
SLIDING SLEEVE (SLIP)

SINGLE-ENDED SLIP-TYPE EXPANSION JOINT WITH GUNS FOR REPLENISHING PACKING

(a)

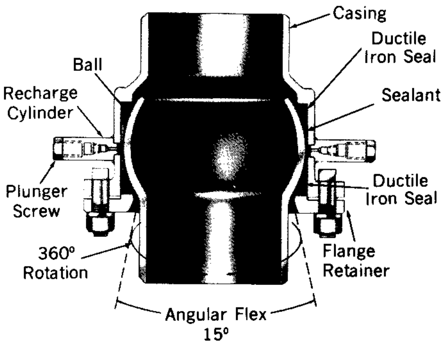
Casing
Ductile Iron Seal
Ball
Recharge Cylinder
Sealant
Plunger Screw
Ductile Iron Seal
360° Rotation
Flange Retainer
Angular Flex 15°

(b)

FIGURE A2.12 (*a*) Slip-type expansion joint. (*Yarway Co.*) (*b*) Typical ball expansion joint. (*Barco Co.*)

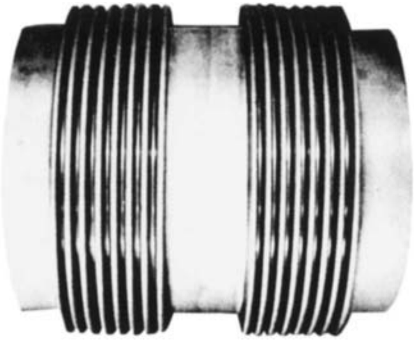

FIGURE A2.13 Metal bellows expansion joint.

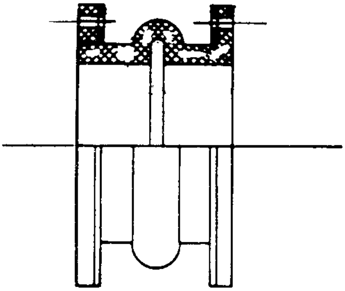

FIGURE A2.14 Rubber expansion joint.

(cyclic life) of the bellows or if the flexing extremes exceed the designed compression and extension limits.

Rubber expansion joints (Fig. A2.14) are similar in design to metal bellows expansion joints except that they are constructed of fabric and wire-reinforced elastomers. They are most suitable for use in cold water service where large movements must be absorbed (e.g., condenser circulating water).

THREADED JOINTS

Threaded joints are normally used in low-pressure small-bore, nonflammable service, although threaded iron pipe is commonly used in domestic gas piping and threaded joints up to NPS 12 (DN 300) have been used in low-pressure liquid service.

For quality joints, it is essential to have smooth, clean threads. A proper form for a pipe threading die is shown in Fig. A6.27. Because cut-thread surfaces are somewhat imperfect, thread sealants (pipe dope) and lubricants are often used to ensure a leak-tight joint. Lubricants such as linseed oil or a compound containing powdered zinc or nickel are sufficient to produce a leak-tight joint in well-made threads. Imperfect threads may require white lead or plumber's tape to provide a good seal. In high-pressure piping where leakage cannot be tolerated, the threaded joints may be seal-welded. Where seal welding is employed, all exposed threads should be covered to prevent cracking in the weld.

Dimensional Standards. Dimensional standards for threads are established in ASME Standard B1.20.1. This standard specifies dimensions, tolerances, and gauging for tape and straight pipe threads, including certain special applications. The normal type of pipe joint employs a tapered external and tapered internal thread. But straight pipe threads are used to advantage for certain types of pipe couplings, grease cup, fuel and oil fittings, mechanical joints for fixtures, and conduit and hose couplings.

Pressure-Tight Joints

Pressure-tight joints for low-pressure service are sometimes made with straight internal threads and the American standard taper external threads. The ductility of the coupling enables the straight thread to conform to the taper of the pipe thread. In commercial practice, straight-tapped couplings are furnished for standard-weight (schedule 40) pipe NPS 2 (DN 50) and smaller. If taper-tapped couplings are required for standard-weight pipe sizes NPS 2 (DN 50) and smaller, line pipe in accordance with API 5L should be ordered. The thread lengths should be in accordance with the American Standard for Pipe Threads, ASME B1.20.1. Taper-tapped couplings are furnished on extra-strong (schedule 80) pipe in all sizes and on standard-weight NPS 2½ (DN 65) and larger.

Dry-seal pipe threads machined in accordance with ASME B1.20.3 are also employed for pressure-tight joints, particularly where the presence of a lubricant or sealer would contaminate the flow medium. Threads are similar to the pipe threads covered by ASME B1.20.1; the essential difference is that, in dry-seal pipe threads, the truncation of the crest and root is controlled to ensure metal-to-metal contact coincident with or prior to flank contact, thus eliminating spiral leakage paths. Dry-seal pipe threads are used in refrigerant systems and for fuel and hydraulic control lines in aircraft, automotive, and marine service. Thread sizes up to NPS 3 (DN 75) are covered by ASME B1.20.3.

Hose Nipples and Couplings. Hose coupling joints are ordinarily used with a gasket and made with straight internal and external loose-fitting threads. There are several standards of hose threads having various diameters and pitches, one of which is based on the American standard pipe thread. With this thread series, it is possible to join small hose sizes ½ to 2 in, inclusive, to ends of standard pipe having American standard external taper pipe threads, by using a gasket to seal the joint. ASME B1.20.7 applies to the threaded parts of hose couplings, valves, nozzles, and all other fittings used in direct connection with hose intended for fire protection or for domestic and industrial general services. However, fire hose coupling dimensions and threads vary with fire districts, and the local fire authority must be consulted. Figure A2.15 illustrates a typical fire hose coupling.

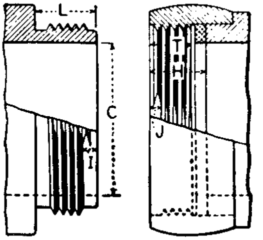

FIGURE A2.15 Typical fire hose coupling.

Bolted Joints

The use of bolted joints is advantageous in the following circumstances:

- The components cannot be serviced in line.
- The components being joined are not capable of being welded.
- Quick field assembly is required.
- The component or pipe section must be frequently removed for service.

Bolted piping components are manufactured in accordance with several national standards. Also, several manufacturers produce proprietary bolted connections

TABLE A2.17 Dimensions of Typical Commercial Cast-Iron Companion Flanges Manufactured in Accordance with ASME B16.1-1989

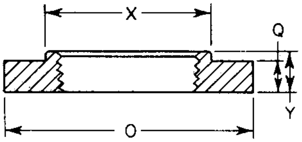

Companion flange, class 125

Size (in)	Diameter of flange Q (in)	Thickness of flange* (min.) Q (in)	Diameter of hub (min.) X (in)	Length through hub* (min.) Y (in)	Weight (approx) each (lb)	
					Cast iron	Malleable†
1	$4\frac{1}{4}$	$\frac{7}{16}$	$1\frac{15}{16}$	$\frac{11}{16}$	1.75	
$1\frac{1}{4}$	$4\frac{5}{8}$	$\frac{1}{2}$	$2\frac{5}{16}$	$\frac{13}{16}$	2.00	
$1\frac{1}{2}$	5	$\frac{9}{16}$	$2\frac{9}{16}$	$\frac{7}{8}$	2.25	2.25
2	6	$\frac{5}{8}$	$3\frac{1}{16}$	1	4.00	4.00
$2\frac{1}{2}$	7	$\frac{11}{16}$	$3\frac{9}{16}$	$1\frac{1}{8}$	6.00	6.00
3	$7\frac{1}{2}$	$\frac{3}{4}$	$4\frac{1}{4}$	$1\frac{3}{16}$	7.63	7.63
$3\frac{1}{2}$	$8\frac{1}{2}$	$\frac{13}{16}$	$4\frac{13}{16}$	$1\frac{1}{4}$	9.00	9.00
4	9	$\frac{15}{16}$	$5\frac{5}{16}$	$1\frac{5}{16}$	11.75	11.75
5	10	$\frac{15}{16}$	$6\frac{7}{16}$	$1\frac{7}{16}$	14.00	14.00
6	11	1	$7\frac{9}{16}$	$1\frac{9}{16}$	16.50	16.50
8	$13\frac{1}{2}$	$1\frac{1}{8}$	$9\frac{11}{16}$	$1\frac{3}{4}$	26.00	26.00
10	16	$1\frac{3}{16}$	$11\frac{15}{16}$	$1\frac{15}{16}$	37.75	
12	19	$1\frac{1}{4}$	$14\frac{1}{16}$	$2\frac{3}{16}$	50.50	
14 OD	21	$1\frac{3}{8}$	$15\frac{3}{8}$	$2\frac{1}{4}$	80.00	
16 OD	$23\frac{1}{2}$	$1\frac{7}{16}$	$17\frac{1}{2}$	$2\frac{1}{2}$	100.00	
18 OD	25	$1\frac{9}{16}$	$19\frac{5}{8}$	$2\frac{11}{16}$	106.00	
20 OD	$27\frac{1}{2}$	$1\frac{11}{16}$	$21\frac{3}{4}$	$2\frac{7}{8}$	128.00	
24 OD	32	$1\frac{7}{8}$	26	$3\frac{1}{4}$	202.00	

which offer cost and time savings over conventional flanged connections. However, proprietary designs must be used within the limitations of the applicable codes.

Ductile and Cast-Iron Flanges. Cast-iron flanges are produced in accordance with ASME B16.1. The standard establishes dimensional requirements, pressure ratings, materials, and bolting requirements. The pressure-temperature ratings and materials requirements for cast-iron flanges are the same as those for cast-iron flanged fittings. The pressure-temperature ratings are given in Table A2.6. The dimensions for Class 125 and Class 250 cast-iron flanges are listed in Table A2.17. XDimensions for bolting are listed in Table A2.18. Note that the Class 125 and Class 250 flanges can be mated with ASME B16.5 Class 150 and Class 300 steel flanges, respectively. When a Class 150 flange is bolted to a Class 125 cast-iron flange (a flat-faced flange), the steel flange should be flat-faced.

Ductile iron flanges and flanged fittings are manufactured in conformance with

TABLE A2.17 Dimensions of Typical Commercial Cast-Iron Companion Flanges Manufactured in Accordance with ASME B16.1-1989 (*Continued*)

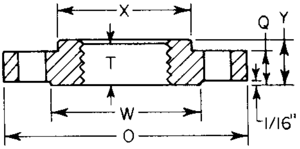

Companion flange, class 250

Size (in)	Diameter of flange *O* (in)	Thickness of flange (min.) *Q* (in)	Diameter of hub (min.) *X* (in)	Length through hub‡ (min.) *Y* (in)	Length of threads (min.) *T* (in)	Diameter of raised face *W* (in)	Weight (approx) each (lb)	
							Cast iron	Malleable†
1½	6⅛	¹³⁄₁₆	2¾	1⅛	0.87	3⁹⁄₁₆	5.75	
2	6½	⅞	3⁵⁄₁₆	1¼	1.00	4³⁄₁₆	6.50	6.50
2½	7½	1	3¹⁵⁄₁₆	1⁷⁄₁₆	1.14	4¹⁵⁄₁₆	9.50	9.50
3	8¼	1⅛	4⅝	1⁹⁄₁₆	1.20	5¹¹⁄₁₆	12.33	12.33
3½	9	1³⁄₁₆	5¼	1⅝	1.25	6⁵⁄₁₆	16.00	
4	10	1¼	5¾	1¾	1.30	6¹⁵⁄₁₆	20.00	20.00
5	11	1⅜	7	1⅞	1.41	8⁵⁄₁₆	24.00	24.00
6	12½	1⁷⁄₁₆	8⅛	1¹⁵⁄₁₆	1.51	9¹¹⁄₁₆	32.00	32.00
8	15	1⅝	10¼	2³⁄₁₆	1.71	11¹⁵⁄₁₆	51.00	51.00
10	17½	1⅞	12⅝	2⅜	1.92	14¹⁄₁₆	77.00	
12	20½	2	14¾	2⁹⁄₁₆	2.12	16⁷⁄₁₆	103.00	

* All 125-lb cast-iron standard flanges have a plain face.

† Dimensional standards have not been established for malleable-iron companion flanges; they are generally produced to the same dimensions as cast-iron flanges of the same class.

‡ Minimum thickness of Class 250 flanges includes ¹⁄₁₆-in raised face.

the following standards:

ASME B16.42	Ductile Iron Pipe Flanges and Flanged Fittings—Class 150 and 300.
ANSI/AWWA	C110/A21.10, C115/A21.15 and C153/A21.53, are listed earlier under ductile and cast iron fittings.

Steel and Nickel-Alloy Flanges. Steel and nickel-alloy flanges up to NPS 24 are produced in accordance with ASME B16.5. Steel flanges NPS 26 (DN 650) through NPS 60 (DN 1500) are produced in accordance with ASME B16.47. Also, orifice flanges are produced in accordance with ASME B16.36. The standards specify materials, dimensions, pressure-temperature ratings, and recommendations for bolting and gasketing. Flanges manufactured to ASME B16.5 and B16.47 may be cast or forged. Also, blind flanges may be fabricated from specific plate materials. The most commonly used materials are forged carbon steel (ASTM A105) and forged low-alloy and stainless steel (ASTM A182). The standards cover seven pressure classes (Classes 150, 300, 400, 600, 900, 1500, and 2500) in a variety of styles and materials. Figures A2.16 and A2.17 show typical flange styles. The dimensions of each style within each pressure class are held constant irrespective of the material. Therefore, within each pressure class, the pressure-temperature rating varies with the material properties (see Figs. A2.1, A2.2, and A2.3).

TABLE A2.18 Bolting Dimension for Cast-Iron Flanges

Size (in)	Diameter of bolt circle	Number of bolts	Diameter of bolts	Diameter of bolt holes	Length of bolts
Class 125					
1	3⅛	4	½	⅝	1¾
1¼	3½	4	½	⅝	2
1½	3⅞	4	½	⅝	2
2	4¾	4	⅝	¾	2¼
2½	5½	4	⅝	¾	2½
3	6	4	⅝	¾	2½
3½	7	8	⅜	¾	2¾
4	7½	8	⅝	¾	3
5	8½	8	¾	⅞	3
6	9½	8	¾	⅞	3¼
8	11¾	8	¾	⅞	3½
10	14¼	12	⅞	1	3¾
12	17	12	⅞	1	3¾
14	18¾	12	1	1⅛	4¼
16	21¼	16	1	1⅛	4½
18	22¾	16	1⅛	1¼	4¾
20	25	20	1⅛	1¼	5
24	29½	20	1¼	1⁴⁄₈	5½

Size (in)	Diameter of bolt circle	Diameter of bolt holes	Number of bolts	Size of bolts	Length of bolts
Class 250					
1½	4½	⅞	4	¾	2¾
2	5	¾	8	⅝	2¾
2½	5⅞	⅞	8	¾	3¼
3	6⅝	⅞	8	¾	3½
3½	7¼	⅞	8	¾	3½
4	7⅞	⅞	8	¾	3¾
5	9¼	⅞	8	¾	4
6	10⅝	⅞	12	¾	4
8	13	1	12	⅞	4½
10	15¼	1⅛	16	1	5¼
12	17¾	1¼	16	1⅛	5½

Proprietary Bolted Connections. There are various proprietary bolted pipe joining systems produced that are not formally addressed by any standard. Under the various piping codes, pressure-retaining components not covered by standards specifically cited as acceptable for use under the "Code" may be used provided their design is proved by analysis or proof testing or a combination of both.

Flange Types

Flanges differ in method of attachment to the pipe, i.e., whether they are screwed, welded, or lapped. Contact surface facings may be plain, serrated, grooved for ring joints, seal-welded, or ground and lapped for metal-to-metal contact. Some common types of joints and facings are shown in Fig. A2.18. In Section VIII, Unfired Pressure Vessels, of the ASME Boiler and Pressure Vessel Code, three types of circular flanges are defined, and these are designated as loose-type (Fig. A2.17), integral-type (Fig. A2.16), and optional-type flanges. Under the code, the welds and other details of construction shall satisfy the dimensional requirements stated therein.

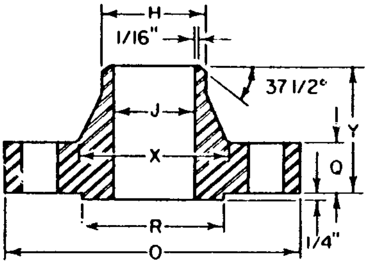

FIGURE A2.16 Typical integral flange (welding neck flange).

Loose-Type Flanges. This (slip-on) type covers those designs in which the flange has no direct connection to the nozzle neck or the vessel or pipe wall and those designs where the method of attachment is not considered to give the mechanical strength equivalent of integral attachment.

Integral-Type Flanges. This type covers designs in which the flange is cast or forged integrally with the nozzle neck or the vessel or pipe wall, butt-welded thereto, or attached by other forms of arc or gas welding of such a nature that the flange and nozzle neck or vessel or pipe wall is considered to be the equivalent of an integral structure. In welded construction, the nozzle neck or the vessel or pipe wall is considered to act as a hub.

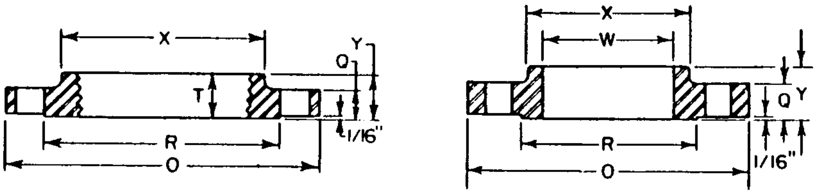

FIGURE A2.17 Typical loose flanges (threaded and slip-on).

Optional-Type Flanges. This type covers designs where the attachment of the flange to the nozzle neck or the vessel or pipe wall is such that the assembly is considered to act as a unit, which shall be calculated as an integral flange, except that for simplicity the designer may calculate the construction as a loose-type flange, provided that stipulated load values are not exceeded.

It is important in flange design to select materials and to proportion dimensions of bolts, flanges, and gaskets to ensure that the necessary compression will be maintained on the joint faces over the expected life of the equipment.

Several distinct phases of the problem are involved: (1) type of flange facing, (2) finish of contact surfaces, (3) gasket type and proportions, (4) bolt load required to secure and maintain a tight joint, and (5) proportions of flange needed to support the bolt load.

Types of Flange Facing. There are numerous types of contact facings for flanges, the simplest of which is the plain face provided with a "smooth tool finish." Class 125 cast-iron flanged fittings are provided with this type of facing. For steel flanges

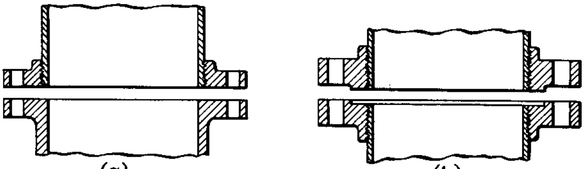

(a)
Screwed flange to fitting joint, plain face

(b)
Screwed flange pipe joint, male and female face

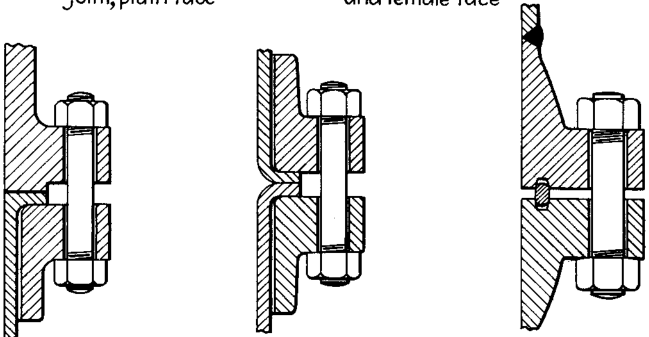

(c)
Lapped pipe to fitting joint, square corner

(d)
Lapped pipe to pipe joint, round corner

(e)
Ring and Groove joint, welding neck flange to fitting

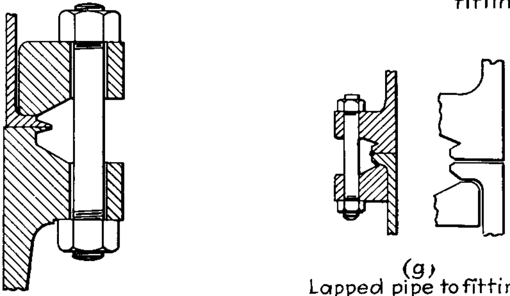

(f)
Lapped pipe to fitting joint, Sarlun seal welded

(g)
Lapped pipe to fitting joint, Sargol seal welded

FIGURE A2.18 Commonly used flanged joints. (*a*) Screwed flange to fitting joint, plain face; (*b*) screwed flange pipe joint, male-and-female face; (*c*) lapped pipe to fitting joint, square corner; (*d*) lapped pipe to pipe joint, round corner; (*e*) ring and groove joint, welding neck flange to fitting; (*f*) lapped pipe to fitting joint, Sarlun seal welded; and (*g*) lapped pipe to fitting joint, Sargol seal welded.

and fittings, the typical facings (Fig. A2.19) are taken from the American Standard for Steel Pipe Flanges and Flanged Fittings, ASME B16.5 and ASME B16.47. The raised face, the lapped, and the large male-and-female facings have the same dimensions, which provide a relatively large contact area. Where metal gaskets are used with these facings, the gasket area should be reduced to increase the gasket compression.

The flange-facing types illustrated in Fig. A2.19 range in size and contact area in the following order: large tongue-and-groove, small tongue-and-groove, small

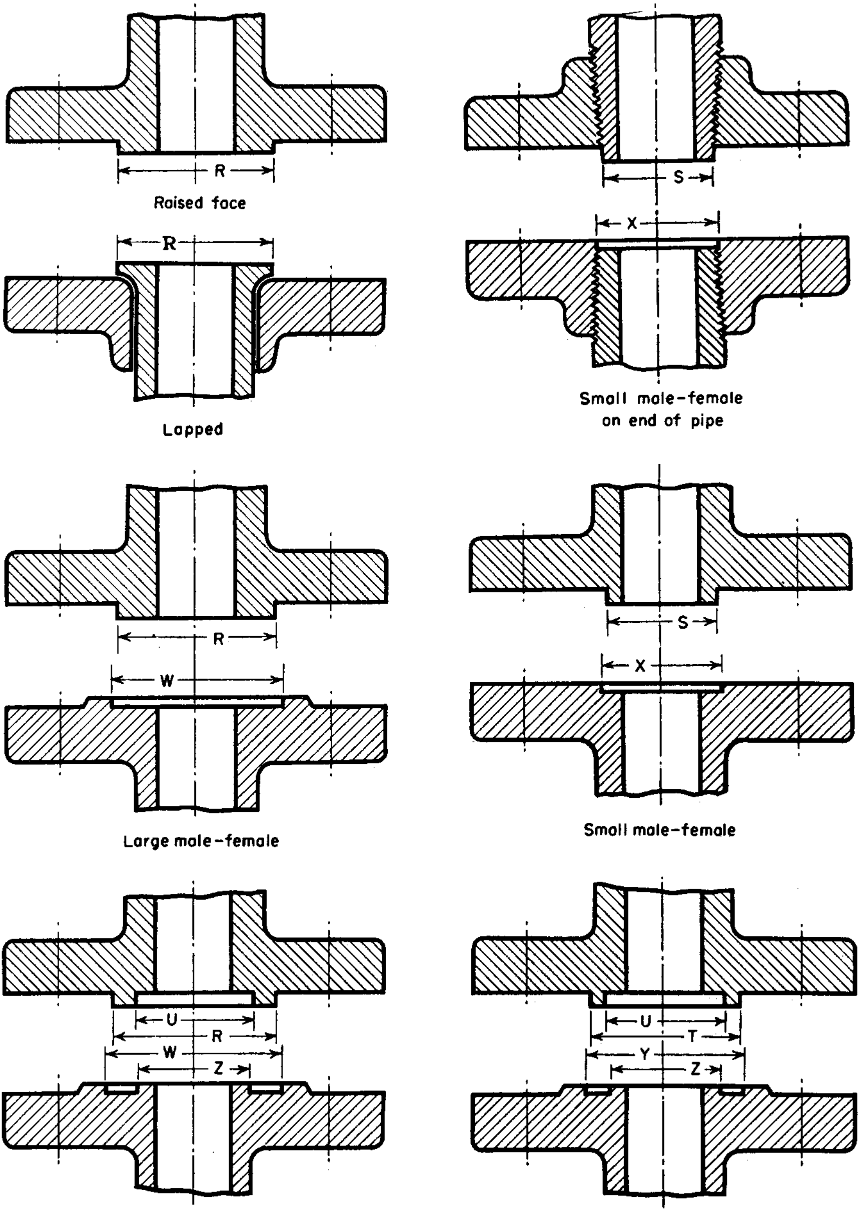

Raised face

Lapped

Small male-female on end of pipe

Large male-female

Small male-female

Large tongue-grove

Small tongue-groove

FIGURE A2.19 Typical flange facings (for dimensions, see ASME B16.5).

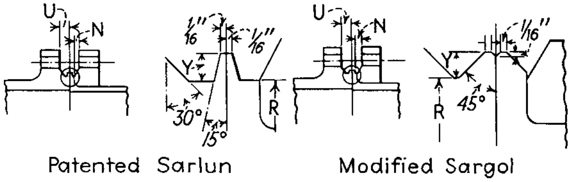

Patented Sarlun Modified Sargol

Nominal pipe size	Basic raised-face, outside diameter *R*	Height of face		Height of front hub		Height of welding projections	
		Sargol* *U*	Sarlun† *U*	Sargol* *N*	Sarlun† *N*	Sargol* *Y*	Sarlun† *Y*
2½	4⅛	½	11⁄16	¼	5⁄16	⅛	5⁄16
3	5	⅝	11⁄16	5⁄16	5⁄16	3⁄16	5⁄16
4	6 3⁄16	¾	¾	7⁄16	13⁄32	5⁄16	5⁄16
5	7 5⁄16	⅞	⅞	½	½	⅜	⅜
6	8½	1	1	9⁄16	9⁄16	⅜	⅜
8	10⅝	1⅛	1⅛	⅝	⅝	⅜	⅜
10	12¾	1¼	1¼	⅝	¾	⅜	⅜
12	15	1 5⁄16	1 5⁄16	⅝	13⁄16	⅜	⅜
14	16½	1⅜	1⅜	⅝	⅞	⅜	⅜
16	18½	1⅜	1⅜	⅝	⅞	⅜	⅜

All dimensions in inches.

* Dimensions of modified Sargol joint.

† Dimensions of Sarlun facings recommended by Sargent and Lundy, Inc.

FIGURE A2.20 Typical facing dimensions for Sargol and Sarlun joints, Class 150 to 2500 flanges (see footnotes).

male-and-female, and ring joint. Because of the small gasket contact area, a tight joint may be secured with the ring-type facing using low bolting loads, thereby resulting in lowered flange stresses (ASME B16.5). The Sargol and Sarlun facings, which have lips for seal welding, are used frequently for severe service conditions. Seal welding is not always performed since, if it is properly made, a tight joint often can be maintained without the welded seal, thus facilitating disassembly. Typical facing dimensions for Sarlun and Sargol joints are shown in Fig. A2.20. Special types of facing of individual design intended for a specific service are numerous. Economic considerations generally make it desirable to use a standard facing wherever possible.

Selection of the type of facing depends to a considerable extent on the nature of the service. However, it is not possible to determine exactly which facing should be used. Prior experience is usually relied on as a guide. Plain-face joints with red rubber gaskets have been found satisfactory for temperatures up to 220°F (105°C), whereas serrated raised-face joints with graphite-steel-composition gaskets are commonly used for temperatures up to 750°F (400°C). For high temperatures and pressures, faces giving a high contact pressure for a given bolt load are customary, such as the tongue-and-groove and ring joints. However, with high contact pressures, the gasket load must be checked to ensure that the gasket is not overcompressed.

An equally successful joint for most types of service can be made by using a profile-serrated metal gasket contacting the flange facing, which may be the plain male-to-male raised-face type.

Contact Surface Finish. The surface finish is an important factor in determining the extent to which a gasket must flow to secure an impervious seal. Bolting that results in adequate gasket flow to form a satisfactory seal with a smooth contact surface may be inadequate to secure a tight joint with a rough surface. The finish may vary from that produced by rough casting surfaces to that produced by grinding and lapping. Less gasket flow will be necessary for the latter than for the former. The finish most frequently provided on cast-iron and steel pipe flanges is the smooth tool finish. A serrated finish frequently is provided for steel flanges, particularly when using a graphite-composition gasket with a wide contact area such as is furnished on raised, lapped, or large tongue-and-groove facings. The serrated finish consists of spiral or concentric grooves, usually about 1/64 in (0.4 mm) deep with 12.5 serrations per cm (32 serrations per inch). Where metal gaskets are used, a smooth surface produced by grinding or lapping is usually provided. The Sargol and Sarlun facings mate metal to metal without a gasket, in which case a mirrorlike finish is necessary. This is usually produced by grinding and lapping. It is evident that the surface finish varies with the type of contact face and gasket used and, therefore, should be specified accordingly.

Gaskets

Since it is expensive to grind and lap joint faces to obtain fluid-tight joints, a gasket of some softer material is usually inserted between contact faces. Tightening the bolts causes the gasket material to flow into the minor machining imperfections, resulting in a fluid-tight seal. A considerable variety of gasket types are in common use. Soft gaskets, such as cork, rubber, vegetable fiber, graphite, or asbestos, are usually plain with a relatively smooth surface. The semimetallic design combines metal and a soft material, the metal to withstand the pressure, temperature, and attack of the confined fluid and the soft material to impart resilience. Various designs involving corrugations, strip-on-edge, metal jackets, etc., are available. In addition to the plain, solid, and flat-surface metal gaskets, various modified designs and cross-sectional shapes of the profile, corrugated, serrated, and other types are used. The object in general has been to retain the advantage of the metal gasket but to reduce the contact area to secure a seal without excessive bolting load. Effective gasket widths are given in various sections of the ASME Boiler and Pressure Vessel Code.

Gasket Materials. Gasket materials are selected for their chemical and pressure resistance to the fluid in the pipe and their resistance to deterioration by temperature. Gasket materials may be either metallic or nonmetallic. Metallic ring-joint gasket materials are covered by ASME Standard B16.20, Ring-Joint Gaskets and Grooves for Steel Pipe Flanges. Nonmetallic gaskets are covered in ASME Standard B16.21, Nonmetallic Gaskets for Pipe Flanges. Typical selections of gasket materials for different services are shown in Table A2.19.

Gasket Compression. In the usual type of high-pressure flange joint, a narrow gasket face or contact surface is provided to obtain higher unit compression on the gasket than is obtainable on full-face gaskets used with low-pressure joints. The compression on this surface and on the gasket if the gasket is used, before internal

TABLE A2.19 Selections of Gasket Materials for Different Services

Fluid	Application	Gasket material*
Steam (high pressure)	Temp up to 1000°F (538°C)	Spiral-wound comp. asbestos or graphite
	Temp up to 1000°F (538°C)	Steel, corrugated, or plain
	Temp up to 1000°F (538°C)	Monel, corrugated, or plain
	Temp up to 1000°F (538°C)	Hydrogen-annealed furniture iron
	Temp up to 1000°F (538°C)	Stainless steel 12 to 14 percent chromium, corrugated
	Temp up to 1000°F (538°C)	Ingot iron, special ring-type joint
	Temp up to 750°F (399°C)	Comp. asbestos, spiral-wound
	Temp up to 600°F (316°C)	Woven asbestos, metal asbestos
	Temp up to 600°F (316°C)	Copper, corrugated or plain
Steam (low pressure)	Temp up to 220°F (105°C)	Red rubber, wire inserted
Water	Hot, medium, and high pressures	Black rubber, red rubber, wire inserted
	Hot, low pressures	Brown rubber, cloth inserted
	Hot	Comp. asbestos
Water	Cold	Red rubber, wire inserted
	Cold	Black rubber
	Cold	Soft rubber
	Cold	Asbestos
	Cold	Brown rubber, cloth inserted
Oils (hot)	Temp up to 750°F (399°C)	Comp. asbestos
	Temp up to 1000°F (538°C)	Ingot iron, special ring-type joint
Oils (cold)	Temp up to 212°F (100°C)	Cork or vegetable fiber
	Temp up to 300°F (149°C)	Neoprene comp. asbestos
Air	Temp up to 750°F (399°C)	Comp. asbestos
	Temp up to 220°F (105°C)	Red rubber
	Temp up to 1000°F (538°C)	Spiral-wound comp. asbestos
Gas	Temp up to 1000°F (538°C)	Asbestos, metallic
	Temp up to 750°F (399°C)	Comp. asbestos
	Temp up to 600°F (316°C)	Woven asbestos
	Temp up to 220°F (105°C)	Red rubber
Acids	(Varies; see section on corrosion)	Sheet lead or alloy steel
	Hot or cold mineral acids	Comp. blue asbestos Woven blue asbestos
Ammonia	Temp up to 1000°F (538°C)	Asbestos, metallic
	Temp up to 700°F (371°C)	Comp. asbestos
	Weak solutions	Red rubber
	Hot	Thin asbestos
	Cold	Sheet lead

* Several gasket manufacturers have introduced nonasbestos, nonmetallic gasket materials for use in high-temperature service. These materials are proprietary, and therefore the manufacturers should be consulted for specific applications.

pressure is applied, depends on the bolt loading used. In the case of standard raised-face joints of the steel-flange standards, these gasket compressions range from 28 to 43 times the rated working pressure in the Class 150 to 400 standards, and from 1 to 28 times in the Class 600 to 2500 standards for an assumed bolt stress of 60,000 psi (4200 kg/cm^2). For the lower-pressure standards, using composition gaskets, a bolt stress of 30,000 psi (2100 kg/cm^2) usually is adequate. The effect of applying the internal pressure is to decrease the compression on the contact surface, since part of the bolt tension is used to support the pressure load.

The initial compression required to force the gasket material into intimate contact with the joint faces depends upon the gasket material and the character of the joint facing. For soft-rubber gaskets, a unit compression stress of 4000 psi (280 kg/cm^2) to 6000 psi (420 kg/cm^2) usually is adequate. Laminated asbestos gaskets in serrated faced joints perform satisfactorily if compressed initially at 12,000 psi (850 kg/cm^2) to 18,000 psi (1260 kg/cm^2). Metal gaskets such as copper, Monel, and soft iron should be given initial compressions considerably in excess of their yield strengths. Unit pressures of 30,000 psi (2100 kg/cm^2) to 60,000 psi (4200 kg/cm^2) have been used successfully with metal gaskets. Various forms of corrugated and serrated metal gaskets are available which enable high unit compression to be obtained without excessive bolt loads. These are designed to provide a contact area that will flow under initial compression of the bolts so as to make an initially pressure-tight joint, but at the same time the compressive stresses in the body of the gasket are sufficiently low as to be comparable to the long-time load-carrying ability of the bolting and flange material at high temperatures.

The residual compression on the gasket necessary to prevent leakage depends on how effective the initial compression has been in forming intimate contact with the flange joint faces. Tests show that a residual compression on the gasket of only 1 to 2 times the internal pressure, with the pressure acting, may be sufficient to prevent leakage where the joint is not subjected to bending or to large and rapid temperature changes. Since joints in piping customarily must withstand both these disturbing influences, minimum residual gasket compressions of 4 to 6 times the working pressure should be provided for in the design of pipe joints.

Relation of Gaskets to Bolting. There is a tendency, as indicated in the ASME Rules for Bolted Flanged Connections, to assign lower residual contact-pressure ratios ranging from about 1 for soft-rubber gaskets to 6 or 7 for solid-metal gaskets. Whereas these are said to have proved satisfactory service for heat-exchanger and pressure-vessel flanges, the more severe service encountered by pipe flanges due to bending moments and large temperature changes is considered by many to warrant designing on the basis of the larger residual gasket compression ratios recommended in the previous paragraph. The lack of understanding of the mechanics of gasket action, the variety of gasket materials, shapes, widths, and thicknesses; the variety of facings used; the variation in flange stiffness; and the uncertainties in bolt pull-up are among the factors that render difficult a precise solution to the problem of gasket design.

Rules for bolting and flange design are contained in Sections III and VIII of the ASME Boiler and Pressure Vessel Code.

Bolting

Bolting material for cast-iron flanges is listed in ASME B16.1. Generally, ASTM A307, grade B material is suitable. For steel flanges, acceptable bolting material is listed in ASME B16.5.

Threading. Bolts and nuts normally are threaded in accordance with ASME B1.1 Standard for Unified Screw Threads. In diameters 1 in and smaller, Class 2A fits on the bolt or stud and Class 2B on the nut applies with the coarse thread series. In diameters 1⅛ in and larger, the eight-pitch-thread series applies with the same fit. Grade 7 bolts are threaded by roll threading after heat treatment. Roll threading cold-works the surface uniformly. The resulting compressive stresses provide substantially increased fatigue strength at the thread root, which is usually the weakest point. The thread root is the weakest point because it is the smallest cross-sectional area in the bolt. The stressed area A of a bolt is computed from

$$A = \frac{0.7854(D - 0.9743)^2}{N}$$

where D is the nominal bolt diameter and N represents the threads per inch.

Bolts with fine threads will exhibit a slightly higher proof strength (about 10 percent) than bolts with coarse threads (as illustrated in Fig. A2.21), provided that the length of engagement with the mating internal thread is sufficient to guarantee a tensile failure through the bolt rather than failure by thread stripping.

In practical bolt assemblies, fine threads are considered weaker because of reduced thread height. Fine threads have limited application for threaded assemblies. They should be used for adjustment rather than as a clamping force.

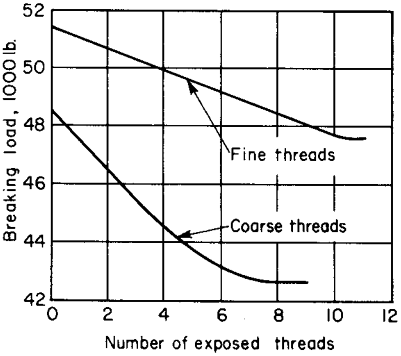

FIGURE A2.21 Comparison of proof strength of fine and coarse threads, SAE Grade 5, ¾-in bolts.

Dimensions

The dimensions applicable to bolting materials are given in ASME B16.5, American Standard Pipe Flanges and Flanged Fittings.

Securing and Tightening. For the average low- and medium-pressure installations, bolts are made in staggered sequence with wrenches which will usually result in adequately tight joints. For the high-pressure and -temperature joints, it becomes increasingly important to make up each stud to a definite tension. Torque wrenches are sometimes used for this purpose.

In exceptional cases where a more positive method is desired, the studs may be tightened until a definite elongation has been attained. For this condition, an initial cold tension of 30,000 psi (2100 kg/cm^2) to 35,000 psi (2460 kg/cm^2) in each stud is recommended. Since the modulus of elasticity of stud material is about 30×10^6 psi (2.1×10^6 kg/cm^2), a tension of 30,000 psi (2100 kg/cm^2) would result in an elongation 0.1% of effective length. The effective length is the distance between nut faces plus one nut thickness. Special studs with ground ends are required to make micrometer measurements for this purpose. After the joint has been in service, periodic checks of the actual cold lengths as compared with the tabulated lengths will detect any permanent elongation of the studs. Permanent elongation will indicate

TABLE A2.20 Turning Efforts to Tighten Eight-Pitch-Thread Bolts

Nominal diameter of bolt (in)	Number of threads per inch	Tensile stress area A_s	Stress*			
			30,000 psi		60,000 psi	
			Torque (ft · lb)	Force per bolt (lb)	Torque (ft · lb)	Force per bolt (lb)
½	13	0.1419	30	4,257	60	8,514
9⁄16	12	0.182	45	4,560	90	10,920
⅝	11	0.226	60	6,780	120	13,560
¾	10	0.334	100	10,020	200	20,040
⅞	9	0.606	160	18,180	320	36,360
1	8	0.462	245	13,860	490	27,720
1⅛	8	0.790	355	23,700	710	47,400
1¼	8	1.000	500	30,000	1,000	60,000
1⅜	8	1.233	680	36,990	1,360	73,980
1½	8	1.492	800	44,760	1,600	89,520
1⅝	8	1.78	1,100	53,400	2,200	106,800
1¾	8	2.08	1,500	62,400	3,000	124,800
1⅞	8	2.41	2,000	72,300	4,000	144,600
2	8	2.77	2,200	83,100	4,400	166,200
2¼	8	3.56	3,180	106,800	6,360	213,600
2½	8	4.44	4,400	133,200	8,800	266,400
2¾	8	5.43	5,920	162,900	11,840	325,800
3	8	6.51	7,720	195,300	15,440	390,600
3¼	8	7.69	. . . . .	230,700	. . . . .	461,400
3½	8	8.96	. . . . .	268,800	. . . . .	537,600
3¾	8	10.34	. . . . .	310,300	. . . . .	620,400
4	8	18.11	. . . . .	354,300	. . . . .	708,600

* Stress has been calculated on the basis of stressed area A_s where $A_s = 0.7854\,(D - 0.9743/N)^2$ in which D is the nominal bolt diameter and N is threads per inch.

overstressing, relaxation, and creep. When these conditions become severe, new studs may be required to maintain the joint properly.

Special thread lubricants are available for temperatures both below 500°F (260°C) and from 500°F (260°C) to 1000°F (540°C). Such lubricants not only facilitate initial tightening but also permit easier disassembly after service.

Table A2.20 illustrates the turning effort required for tightening well-lubricated threads and bearing surfaces. Tests with no lubricant on threads and bearing surfaces may increase torque requirements by 75 to 100 percent to secure a given bolt stress.

For more information on bolted joints, see Chap. A7.

WELDED AND BRAZED JOINTS

Welded and brazed joints are the most commonly used methods for joining piping components because these joints are stronger and more leak-tight than threaded and flanged joints. Furthermore, they do not add weight to the piping system as flanges do, and they do not require an increase in pipe wall thickness to compensate for threading, as threaded joints do.

Pipe-Weld Joint Preparation and Design

Butt Welds. The most common type of joint employed in the fabrication of welded pipe systems is the circumferential butt joint. It is the most satisfactory joint from the standpoint of stress distribution. Its general field of application is pipe to pipe, pipe to flange, pipe to valve, and pipe to fitting joints. Butt joints may be used for all sizes, but fillet-welded joints can often be used to advantage for pipe NPS 2 (DN 50) and smaller.

The profile of the weld edge preparations for butt welds may be any configuration the welding organization deems suitable for making an acceptable weld. However, to standardize the weld edge preparation on butt-welded commercial piping components, standard weld edge preparation profiles have been established in ASME B16.25. These weld edge preparation requirements are also incorporated into the standards governing the specific components (e.g., B16.9, B16.5, B16.34). Figures

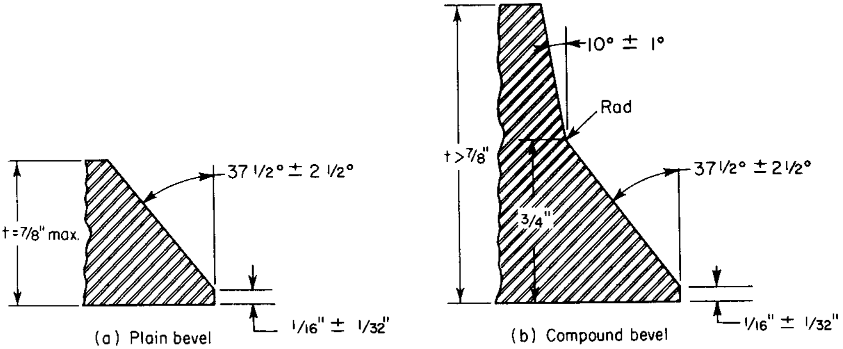

(a) Plain bevel

(b) Compound bevel

Nominal pipe wall thickness t	End preparation
Less than x^*	Cut square or slightly chamfer, at manufacturer's option
x^* to ⅞ incl.	Plain bevel as in (a) above
More than ⅞	Compound bevel as in (b) above

$x^* = \frac{3}{16}$" for carbon steel, ferritic alloy steel, or wrought iron; ⅛" for austenitic alloy steel

FIGURE A2.22 Basic welding bevel for all components (without backing ring, or with split ring).

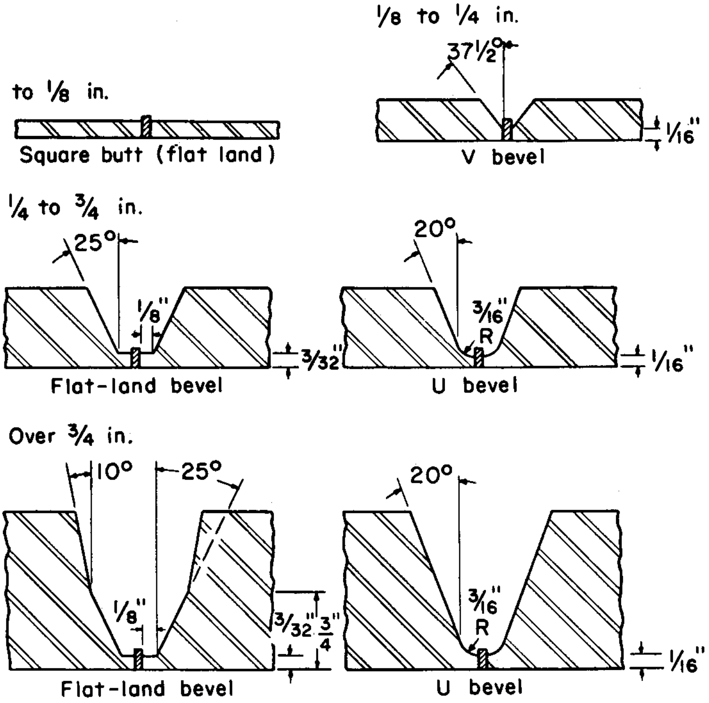
to 1/8 in.
Square butt (flat land)
1/8 to 1/4 in.
37½°
1/16"
V bevel
1/4 to 3/4 in.
25°
1/8"
3/32"
Flat-land bevel
20°
3/16"
R
1/16"
U bevel
Over 3/4 in.
10°
25°
1/8"
3/32"
3/4"
Flat-land bevel
20°
3/16"
R
1/16"
U bevel

FIGURE A2.23 Typical end preparations for pipe which is to be welded by the inert-gas tungsten-arc welding process.

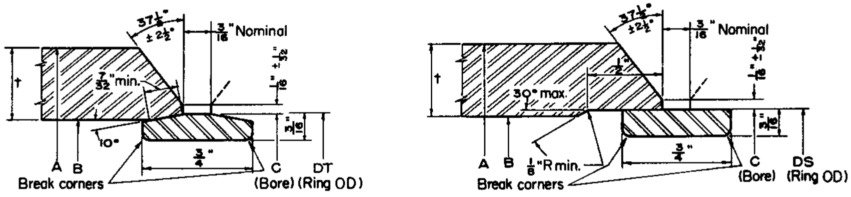
37½° ±2½°
3/16" Nominal
1/16" ±1/32"
7/32" min.
3/16"
10°
3/4"
t
A
B
C
DT
Break corners
(Bore) (Ring OD)
37½° ±2½°
3/16" Nominal
1/16" ±1/32"
1/2"
30° max.
1/8" R min.
3/16"
3/4"
t
A
B
C
DS
Break corners
(Bore) (Ring OD)

For wall thickness (t) 9/16 to 1 in. inclusive and tapered internal machining.

For wall thickness (t) 9/16 to 1 in. inclusive and straight internal machining.

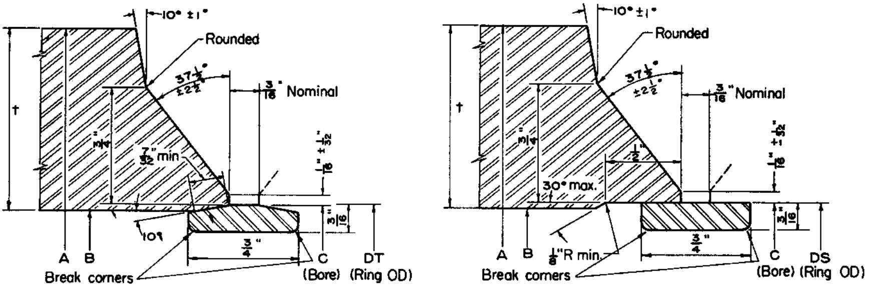
10° ±1°
Rounded
37½° ±2½°
3/16" Nominal
1/16" ±1/32"
3/4"
7/32" min.
10°
3/16"
3/4"
t
A
B
C
DT
Break corners
(Bore) (Ring OD)
10° ±1°
Rounded
37½° ±2½°
3/16" Nominal
1/16" ±1/32"
3/4"
1/2"
30° max.
1/8" R min.
3/16"
3/4"
t
A
B
C
DS
Break corners
(Bore) (Ring OD)

For wall thickness (t) greater than 1 in. and tapered internal machining.

For wall thickness (t) greater than 1 in. and straight internal machining.

FIGURE A2.24 End preparation and backing-ring requirements for critical-service applications employing flat or taper-machined solid backing rings. See Table A2.21 for dimensional data.

TABLE A2.21 Dimensions for Internal Machining and Backing Rings for Heavy-Wall Pipe in Critical Applications

Nominal pipe size	Schedule no. or wall	Nominal OD *A*	Nominal ID *B*	Nominal wall thickness *t*	Machined ID of pipe *C* tolerance $^{+0.010}_{-0.000}$	OD of backing ring	
						Tapered ring *DT* tolerance $^{+0.010}_{-0.000}$	Straight ring *DS* tolerance $^{+0.000}_{-0.010}$
3	XXS	3.500	2.300	0.600	2.409	2.419	2.409
4	XXS	4.500	3.152	0.674	3.279	3.289	3.279
5	160	5.563	4.313	0.625	4.428	4.438	4.428
	XXS	5.563	4.063	0.750	4.209	4.219	4.209
6	120	6.625	5.501	0.562	5.600	5.610	5.600
	160	6.625	5.187	0.719	5.326	5.336	5.326
	XXS	6.625	4.897	0.864	5.072	5.082	5.072
8	100	8.625	7.437	0.594	7.546	7.554	7.544
	120	8.625	7.187	0.719	7.326	7.336	7.326
	140	8.625	7.001	0.812	7.163	7.173	7.163
	XXS	8.625	6.875	0.875	7.053	7.063	7.053
	160	8.625	6.813	0.906	6.998	7.008	6.998
10	80	10.750	9.562	0.594	9.671	9.679	9.669
	100	10.750	9.312	0.719	9.451	9.461	9.451
	120	10.750	9.062	0.844	9.234	9.242	9.232
	140	10.750	8.750	1.000	8.959	8.969	8.959
	160	10.750	8.500	1.125	8.740	8.750	8.740
12	60	12.750	11.626	0.562	11.725	11.735	11.725
	80	12.750	11.374	0.688	11.507	11.515	11.505
	100	12.750	11.062	0.844	11.234	11.242	11.232
	120	12.750	10.750	1.000	10.959	10.969	10.959
	140	12.750	10.500	1.125	10.740	10.750	10.740
	160	12.750	10.126	1.312	10.413	10.423	10.413
14 OD	60	14.000	12.812	0.594	12.921	12.929	12.919
	80	14.000	12.500	0.750	12.646	12.656	12.646
	100	14.000	12.124	0.938	12.319	12.327	12.317
	120	14.000	11.812	1.094	12.046	12.054	12.044
	140	14.000	11.500	1.250	11.771	11.781	11.771
	160	14.000	11.188	1.406	11.498	11.508	11.498

TABLE A2.21 Dimensions for Internal Machining and Backing Rings for Heavy-Wall Pipe in Critical Applications (*Continued*)

Nominal pipe size	Schedule no. or wall	Nominal OD *A*	Nominal ID *B*	Nominal wall thickness *t*	Machined ID of pipe *C* tolerance +0.010 −0.000	OD of backing ring	
						Tapered ring *DT* tolerance +0.010 −0.000	Straight ring *DS* tolerance +0.000 −0.010
16 OD	60	16.000	14.688	0.656	14.811	14.821	14.811
	80	16.000	14.312	0.844	14.484	14.492	14.482
	100	16.000	13.938	1.031	14.155	14.165	14.155
	120	16.000	13.562	1.219	13.826	13.836	13.826
	140	16.000	13.124	1.438	13.442	13.452	13.442
	160	16.000	12.812	1.594	13.171	13.179	13.169
18 OD	40	18.000	16.876	0.562	16.975	16.985	16.975
	60	18.000	16.500	0.750	16.646	16.656	16.646
	80	18.000	16.124	0.938	16.319	16.312	16.317
	100	18.000	15.688	1.156	15.936	15.946	15.936
	120	18.000	15.250	1.375	15.553	15.563	15.553
	140	18.000	14.876	1.562	15.225	15.235	15.225
	160	18.000	14.438	1.781	14.842	14.852	14.842
20 OD	40	20.000	18.812	0.594	18.921	18.929	18.919
	60	20.000	18.376	0.812	18.538	18.548	18.538
	80	20.000	17.938	1.031	18.155	18.165	18.155
	100	20.000	17.438	1.281	17.717	17.727	17.717
	120	20.000	17.000	1.500	17.334	17.344	17.334
	140	20.000	16.500	1.750	16.896	16.906	16.896
	160	20.000	16.062	1.969	16.515	16.523	16.513
22 OD	. . .	22.000	20.750	0.625	20.865	20.875	20.865
	60	22.000	20.250	0.875	20.428	20.438	20.428
	80	22.000	19.750	1.125	19.990	20.000	19.990
	100	22.000	19.250	1.375	19.553	19.563	19.553
	120	22.000	18.750	1.625	19.115	19.125	19.115
	140	22.000	18.250	1.875	18.678	18.688	18.678
	160	22.000	17.750	2.125	18.240	18.250	18.240
24 OD	30	24.000	22.876	0.562	22.975	22.985	22.975
	40	24.000	22.624	0.688	22.757	22.765	22.755
	60	24.000	22.062	0.969	22.265	22.273	22.263
	80	24.000	21.562	1.219	21.826	21.836	21.826
	100	24.000	20.938	1.531	21.280	21.290	21.280
	120	24.000	20.376	1.812	20.788	20.798	20.788
	140	24.000	19.876	2.062	20.350	20.360	20.350
	160	24.000	19.312	2.344	19.859	19.867	19.857

A2.22, A2.23, and A2.24 illustrate the various standard weld edge profiles for different wall thickness.

On piping, the end preparation is normally done by machining or grinding. On pipe of heavier wall thicknesses, machining is generally done on post mills. On carbon and low-alloy steels, oxygen cutting and beveling are also used, particularly on pipe of wall thicknesses below ½ in (12 mm). However, the slag should be removed by grinding prior to welding.

Because of fairly broad permissible eccentricity and size tolerances of pipe and fittings, considerable mismatch may be encountered on the inside of the piping. Limitations on fit-up tolerances are included in several piping codes. For severe service applications, internal machining may be required to yield proper fit-up. When one is machining the inside diameter, care should be taken to ensure that minimum wall requirements are not violated. Table A2.21 lists the counterbore dimensions typically specified.

When piping components of unequal wall thickness are to be welded, care should be taken to provide a smooth taper toward the edge of the thicker member. The length of the taper desirable is normally 3 times the offset between the components, as outlined in ASME Boiler and Pressure Vessel Code Sections-I and III, and ASME B31.1, Power Piping Code. The two methods of alignment which are recommended are shown in Fig. A2.25.

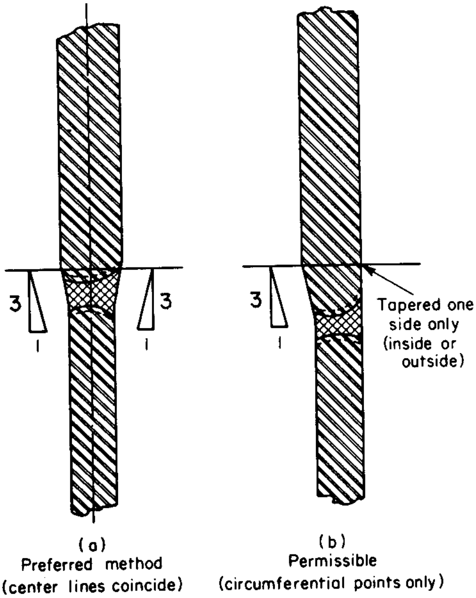
3
1
3
1
3
1
Tapered one side only (inside or outside)
(a) Preferred method (center lines coincide)
(b) Permissible (circumferential points only)

FIGURE A2.25 Recommended welding-end sections for pipe, valves, and fittings of unequal thickness. (*a*) Preferred method (centerlines coincide); (*b*) permissible (circumferential points only).

The wall thickness of cast-steel fittings and valve bodies is normally greater than that of the pipe to which they are joined. To provide a gradual transition between piping and components, the ASME Boiler and Pressure Vessel Code and the ASME

Code for Pressure Piping permit the machining of the cylindrical ends of fittings and valve bodies to the nominal wall thickness of the adjoining pipe. However, in no case is the thickness of a valve permitted to be less than $0.77t_{\min}$ at a distance of $1.33t_{\min}$ from the weld end, where $t_{\min}$ is the minimum valve thickness required by ASME B16.34. The machined ends may be extended back in any manner, provided that the longitudinal section comes within the maximum slope line indicated in Fig. A2.25. The transition from the pipe to the fitting or valve end at the joint must be such as to avoid sharp reentrant angles and abrupt changes in slope.

End Preparation for Inert-Gas Tungsten-Arc Root-Pass Welding. The pipe end bevel preparations shown in Fig. A2.24 are considered adequate for shielded metal-arc welding, but they pose some problems in inert-gas tungsten-arc welding. When this process is used, extended U or flat-land bevel preparations are considered more suitable since the extended land reduces the heat sink, thereby affording better weld penetration. The end preparations apply to inert-gas tungsten-arc welding of carbon- and low-alloy steel piping, stainless-steel piping, and most nonferrous piping materials. On aluminum piping, the flat-land bevel preparations are preferred by some fabricators.

Backing Rings. Backing rings are employed in some piping systems, particularly where pipe joints are welded primarily by the shielded metal-arc welding process with covered electrodes. For example, a significant number of pipe welds for steam power plants and several other applications are made with the use of backing rings. On the other hand, in many applications backing rings are not used, since they may restrict flow, provide crevices for the entrapment of corrosive substances, enhance susceptibility to stress corrosion cracking, or introduce still other objectionable features. Thus, there is little, if any, use made of backing rings in most refinery piping, radioactive service piping, or chemical process piping.

The use of backing rings is primarily confined to carbon- and low-alloy steel and aluminum piping. Carbon-steel backing rings are generally made of a mild carbon steel with a maximum carbon content of 0.20 percent and a maximum sulfur content of 0.05 percent. The latter requirement is especially important since high sulfur in deposited weld metal (which could be created by an excessive sulfur content in such rings) may cause weld cracks. Split backing rings are satisfactory for service piping systems. For the more critical service applications involving carbon- and low-alloy steel piping, solid flat or taper-machined backing rings are preferred in accordance with the recommendations shown in Pipe Fabrication Institute Standard ES1 and illustrated in Fig. A2.24 and Table A2.21.

When a machined backing ring is desired, it is a general recommendation that welding ends be machined on the inside diameter in accordance with the Pipe Fabrication Institute standard for the most critical services—and then only when pierced seamless pipe that complies with the applicable specifications of the American Society for Testing and Materials is used. Such critical services include high-pressure steam lines between boiler and turbines and high-pressure boiler feed discharge lines, as encountered in modern steam power plants. It is also recommended that the material of the backing ring be compatible with the chemical composition of the pipe, valve, fitting, or flange with which it is to be used. Where materials of dissimilar composition are being joined, the composition of the backing ring may be that of the lower alloy.

On turned-and-bored and fusion-welded pipe, the design of the backing ring and internal machining, if any, should be a matter of agreement between the customer and the fabricator. Regardless of the type of backing rings used, it is recommended that the general contour of the welding bevel shown in Fig. A2.24 be maintained.

When machining piping for backing rings, the resulting wall thickness should be not less than that required for the service pressure. Wherever internal machining for machined backing rings is required on pipe and welding fittings in smaller sizes and lower schedule numbers than those listed in Table A2.21, weld metal may have to be deposited on the inside of the pipe in the area to be machined. This is to provide satisfactory contact between the machined surface on the pipe inside and the machined backing ring. For such cases, the machining dimension should be a matter of agreement between the fabricator and the purchaser.

Whenever pipe and welding fittings in the sizes and schedule numbers listed in Table A2.21 have plus tolerance on the outside diameter, it also may be necessary to deposit weld metal on the inside of the pipe or welding fitting in the area to be machined. In such cases, sufficient weld metal should be deposited to result in an ID not greater than the nominal ID given in Table A2.21 for the particular pipe size and wall thickness involved.

Experience indicates that machining to dimension *C* for the pipe size and schedule number listed in Table A2.21 generally will result in a satisfactory seat contact of 7/32 in (5.5 mm) minimum (approximately 75 percent minimum length of contact) between pipe and the 10° backing ring. Occasionally, however, it will be necessary to deposit weld metal on the inside diameter of the pipe or welding fitting in order to provide sufficient material for machining a satisfactory seat.

In welding butt joints with backing rings, care should be exercised to ensure good fusion of the first weld pass into the backing ring in order to avoid lack of weld penetration or other types of stress-raising notches.

Consumable Insert Rings.. The chemical composition of a piping base metal is established primarily to provide it with certain mechanical, physical, or corrosion resisting properties. Weldability characteristics, if considered at all, are of secondary concern. On the other hand, the chemical composition of most welding filler metals is determined with primary emphasis on producing a sound, high-quality weld. The steelmaking process employed in the manufacture of welding filler metals permits closer control of the composition range, which is usually considerably narrower than would be practical for the piping base metal where much larger tonnages of steel are involved. On some base metals, the welding together by fusion of only the base-metal compositions may lead to such welding difficulties as cracking or porosity. The addition of filler metal tends to improve weld quality. However, in inert-gas tungsten-arc welding, the addition of welding filler metal from a separate wire, which the welder feeds with one hand while manipulating the tungsten-arc torch with the other, is a cumbersome process and interferes with welding ease. The welder may leave areas with lack of penetration, which generally are considered unacceptable as can be seen, e.g., in the rules of the ASME Boiler and Pressure Vessel Code. Since some types of serious weld defects are detected only with difficulty during inspection (if they are detected at all), it is extremely important to provide the easiest welding conditions for the welder to produce quality welds. One technique to produce high-quality welds is to employ consumable insert rings of proper composition and dimensions. Consumable insert rings which are available commercially are shown in Fig. A2.26. The three primary functions of consumable insert rings are to (1) provide the easiest welding conditions and thereby minimize the effects of undesirable welding variables caused by the ‘‘human’’ element, (2) give the most favorable weld contour to resist cracking resulting from weld-metal shrinkage and hot shortness, or brittleness, in hot metal, and (3) produce metallurgically the soundest possible weld-metal composition of desirable strength, ductility, and toughness properties.

The best welding conditions are obtained where the flat-land and extended U-bevel preparations are used. These joint preparations are particularly helpful where welding is done in the horizontal fixed pipe position (5G), since they ensure a flat or slightly convex root contour and provide by far the greatest resistance to weld cracking in those alloys particularly susceptible to microfissuring.

The weld-root contour conditions to be expected from different bevel preparations and consumable insert rings are illustrated in Fig. A2.27. Where sink is not acceptable, it is considered obligatory to use consumable insert rings with the special flat-land or extended U-bevel preparation. In horizontal-rolled (IG) and vertical-position (2G) welding, the insert ring should be placed concentrically into the beveled pipe.

In horizontal fixed-position (5G) welding, the insert ring should be placed eccentric to the centerline of the pipe (as shown in Fig. A2.28). In this position, the insert ring compensates for the downward sag of the molten weld metal and aids in obtaining smooth, uniform root contour along the inner diameter and the joint.

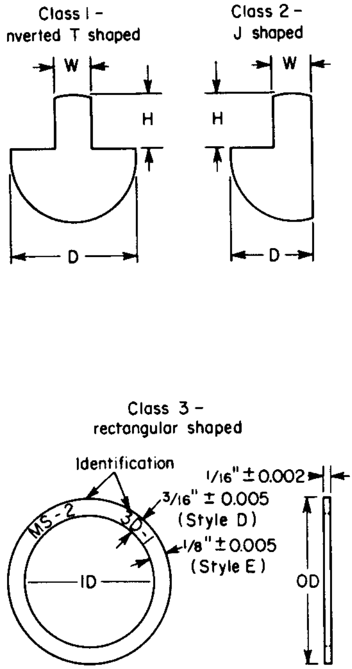

FIGURE A2.26 Commercial consumable insert rings used in pipe welding (MIL-I-23413). Style D: for NPS 2 and larger. On Schedule 5 for NPS 5 and larger; style E: for NPS less than 2. On Schedule 5 for NPS less than 5.

Fillet Welds

Circumferential fillet-welded joints are generally used for joining pipe to socket joints in sizes NPS 2 (DN 50) and smaller. Figure A2.29 illustrates three typical fillet-welded joints. These types of welds are subjected to shearing and bending stresses, and adequate penetration of the pieces being joined is essential. This is particularly important with the socket joint, since the danger of washing down the end of the hub may obscure, by reason of fair appearance, the lack of a full and sound fillet weld. This condition is one which cannot be detected in the finished weld by the usual visual inspection. Additionally, a 1/16-in (1.5-mm) gap (before welding) must be maintained between the pipe end and the base of the fitting to allow for differential expansion of the mating elements.

There are service applications in which socket welds are not acceptable. Piping systems involving nuclear or radioactive service or corrosive service with solutions which promote stress corrosion cracking or concentration cell action generally

Welding conditions	Consumable insert ring	Position	Inside pipe contour			Permissible concavity at inside of pipe
			Top	Side	Bottom	
"Flat-land" bevel	Yes	1G	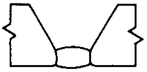			0
	No	1G	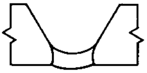			0
	Yes	2G		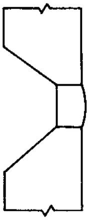		0
	No	2G		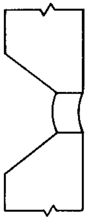		1/32"
	Yes	5G	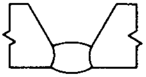		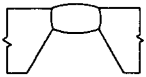	0
	No	5G	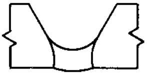		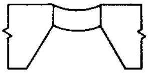	1/32"
37 1/2	Yes	1G	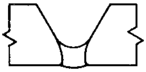			0
	No	1G	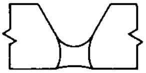			1/32"
	Yes	2G		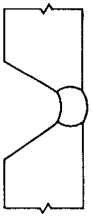		1/64"
	No	2G		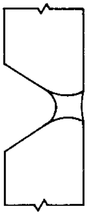		1/16"
	Yes	5G	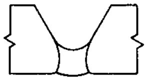		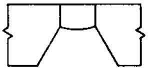	1/8"
	No	5G	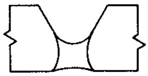		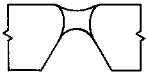	1/16"

FIGURE A2.27 Root-contour conditions which can be expected as the result of normal pipe welding with the gas tungsten-arc welding process. In 5G (horizontal-fixed) position welding the insert ring is positioned eccentric to the centerline of the pipe, as illustrated in Fig. A2.28.

require butt welds in all pipe sizes with complete weld penetration to the inside of the piping.

Brazed Joints

Lap or shear-type joints generally are necessary to provide capillary attraction for brazing of connecting pipe. Square-groove butt joints may be brazed, but the results are unreliable unless the ends of the pipe or tube are accurately prepared, plane and square, and the joint is aligned carefully, as in a jig. High strengths may be obtained with butt joints if they are properly prepared and brazed. However, owing to the brittleness of the brazing alloy, they are not normally applicable.

The alloys generally used in brazing exhibit their greatest strength when the thickness of the alloy in the lap area is minimal. Thin alloy sections also develop the highest ductility. For brazing ferrous and nonferrous piping with silver- and copper-base brazing alloys, the thickness of the brazing alloy in the joint generally should not be more than 0.006 in (0.15 mm) and preferably not more than 0.004 in (0.1 mm). Thicknesses less than 0.003 in (0.07 mm) may make assembly difficult, while those greater than 0.006 in (0.15 mm) tend to produce joints having lowered strength. The brazing of certain aluminum alloys is similar in most respects to the brazing of other materials. However, joint clearances should be greater because of a somewhat more sluggish flow of the brazing alloys. For aluminum, a clearance of 0.005 to 0.010 in (0.12 to 0.25 mm) will be found satisfactory. Care must be exercised in fitting dissimilar metals, since the joint clearance at brazing temperature is the controlling factor. In these cases, consideration must be given to the relative expansion rates of the materials being joined.

The length of lap in a joint, the shear strength of the brazing alloy, and the average percentage of the brazing surface area that normally bonds are the

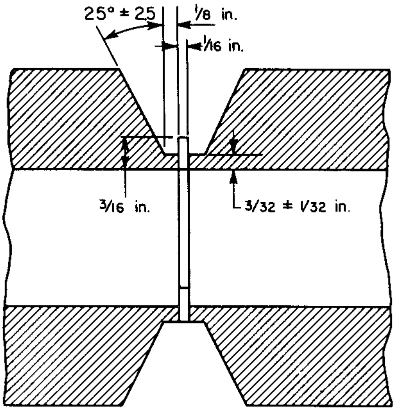

FIGURE A2.28 Eccentric insertion of consumable insert ring in pipe welded in the fixed horizontal pipe position.

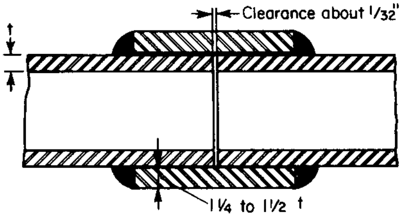

Welded sleeve coupling

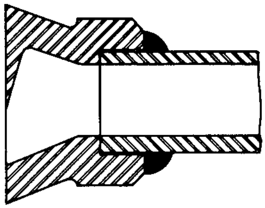

Socket detail for small welding and valve

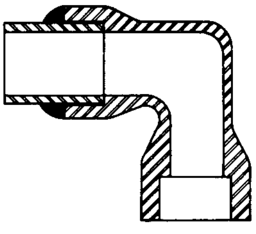

Socket end welding elbow

FIGURE A2.29 Examples of typical fillet-welded joints.

TABLE A2.22 Standard Dimensions of Bell-and-Spigot Joints for Pipe Centrifugally Cast in Metal Molds

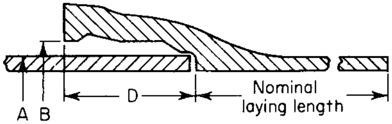

Nominal pipe size	Class	Thickness designation	Thickness of pipe	OD of pipe *A*	Diameter of socket *B*	Depth of socket *D*	Weight (approx) (lb)			Joint compound, (lb per 2½-in depth)	Jute (lb per joint)	Lead (lb per 2½-in depth)
							Barrel per foot	Bell	18-ft laying length*			
3	Through 350	22	0.32	3.96	4.76	3.30	11.4	11	215			
4	Through 350	22	0.35	4.80	5.60	3.30	15.3	14	290	2.00	0.21	8.00
6	Through 350	22	0.38	6.90	7.70	3.88	24.3	25	460	3.00	0.31	11.25
8	Through 350	22	0.41	9.05	9.85	4.38	34.7	41	665	4.00	0.44	14.50
10	Through 250	22	0.44	11.10	11.90	4.38	46.0	54	880	5.00	0.53	17.50
	300	23	0.48	11.10	11.90	4.38	50.0	54	955			
	350	24	0.52	11.10	11.90	4.38	53.9	54	1025			
12	Through 200	22	0.48	13.20	14.00	4.38	59.8	66	1140	6.00	0.61	20.50
	250, 300	23	0.52	13.20	14.00	4.38	64.6	66	1230			
	350	24	0.56	13.20	14.00	4.38	69.4	66	1315			

TABLE A2.22 Standard Dimensions of Bell-and-Spigot Joints for Pipe Centrifugally Cast in Metal Molds (*Continued*)

Nominal pipe size	Class	Thickness designation	Thickness of pipe	OD of pipe *A*	Diameter of socket *B*	Depth of socket *D*	Weight (approx) (lb)			Joint compound, (lb per 2½-in depth)	Jute (lb per joint)	Lead (lb per 2½-in depth)
							Barrel per foot	Bell	18-ft laying length*			
14	50	21	0.48	15.30	16.10	4.50	69.7	78	1335	7.00	0.81	24.00
	100	22	0.51	15.30	16.10	4.50	73.9	78	1410			
	150	22	0.51	15.30	16.10	4.50	73.9	78	1410			
	200	23	0.55	15.30	16.10	4.50	79.5	78	1510			
	250, 300	24	0.59	15.30	16.10	4.50	85.1	78	1610			
	350	25	0.64	15.30	16.10	4.50	92.0	78	1735			
16	50, 100	22	0.54	17.40	18.40	4.50	89.2	96	1700	8.25	0.94	33.00
	150	22	0.54	17.40	18.40	4.50	89.2	96	1700			
	200	23	0.58	17.40	18.40	4.50	95.6	96	1815			
	250	24	0.63	17.40	18.40	4.50	103.6	96	1960			
	300, 350	25	0.68	17.40	18.40	4.50	111.4	96	2100			
18	50	21	0.54	19.50	20.50	4.50	100.4	114	1920	9.25	1.00	36.90
	100	22	0.58	19.50	20.50	4.50	107.6	114	2050			
	150	22	0.58	19.50	20.50	4.50	107.6	114	2050			
	200	23	0.63	19.50	20.50	4.50	116.5	114	2210			
	250	24	0.68	19.50	20.50	4.50	125.4	114	2370			
	300	25	0.73	19.50	20.50	4.50	134.3	114	2530			
	350	26	0.79	19.50	20.50	4.50	144.9	114	2720			
20	50	21	0.57	21.60	22.60	4.50	117.5	133	2250	10.50	1.25	40.50
	100	22	0.62	21.60	22.60	4.50	127.5	133	2430			
	150	22	0.62	21.60	22.60	4.50	127.5	133	2430			
	200	23	0.67	21.60	22.60	4.50	137.5	133	2610			
	250	24	0.72	21.60	22.60	4.50	147.4	133	2785			
	300	25	0.78	21.60	22.60	4.50	159.2	133	3000			
	350	26	0.84	21.60	22.60	4.50	170.9	133	3210			
24	50	21	0.63	25.80	26.80	4.50	155.4	179	2975	13.00	1.50	52.50
	100	22	0.68	25.80	26.80	4.50	167.4	179	3190			
	150	23	0.73	25.80	26.80	4.50	179.4	179	3410			
	200, 250	24	0.79	25.80	26.80	4.50	193.7	179	3665			
	300	25	0.85	25.80	26.80	4.50	207.9	179	3920			
	350	26	0.92	25.80	26.80	4.50	224.4	179	4220			

* Includes weight of bell.

TABLE A2.23 Standard Dimensions of Mechanical (Gland-Type) Joints (ANSI/AWWA C111/A21.11-1985)

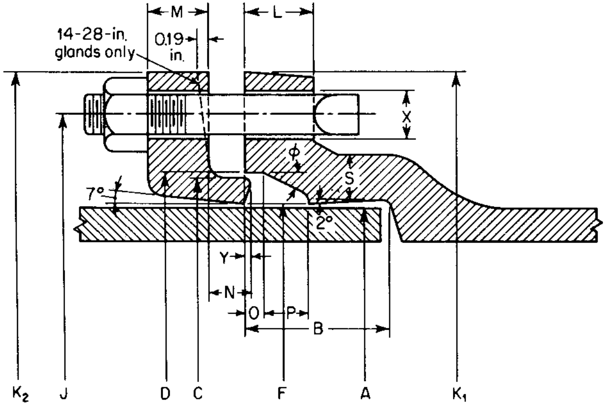

Nominal pipe size	*A*‡ Plain end	*B*	*C*	*D*	*F*	*ϕ* deg	*X*†	*J*	*K*₁§		*K*₂§	*L*	*M*	*N*	*O*	*P*	*S**		*Y*	Bolts¶		
									Centrifugal pipe	Pit cast pipe and fittings							Centrifugal pipe	Pit cast pipe and fittings		No	Size	Length
2	±0.05 2.50	2.50	±0.05 3.39	±0.05 3.50	±0.05 2.61	28°	+0.06 −0.0 ¾	±0.05 4.75	−0.05 6.00	−0.10 6.25	−0.10 6.25	−0.05 0.75	−0.05 0.62	0.50	0.31	0.63	−0.05 0.37	−0.07 0.44	0.08	2	⅝	2½
2½	±0.05 2.75	2.50	±0.05 3.64	±0.05 3.75	±0.05 2.86	28°	+0.06 −0.0 ¾	±0.05 5.00	−0.05 6.25	−0.10 6.50	−0.10 6.50	−0.05 0.75	−0.03 0.62	0.50	0.31	0.63	−0.05 0.37	−0.07 0.44	0.08	2	⅝	2½
3	±0.06 3.96	2.50	±0.04 4.84	±0.06 −0.04 4.94	±0.07 −0.03 4.06	28°	+0.06 −0.0 ¾	±0.06 6.19	−0.06 7.62	−0.12 7.69	−0.12 7.69	−0.06 0.94	−0.06 0.62	0.75	0.31	0.63	−0.05 0.47	−0.10 0.52	0.12	4	⅝	3
4	±0.06 4.80	2.50	±0.04 5.92	+0.06 −0.04 6.02	+0.07 −0.03 4.90	28°	+0.06 −0.0 ⅞	±0.06 7.50	−0.06 9.06	−0.12 9.12	−0.12 9.12	−0.06 1.00	−0.06 0.75	0.75	0.31	0.75	−0.05 0.55	−0.10 0.65	0.12	4	¾	3½
6	±0.06 6.90	2.50	±0.04 8.02	+0.06 −0.04 8.12	+0.07 −0.03 7.00	28°	+0.06 −0.0 ⅞	±0.06 9.50	−0.06 11.06	−0.12 11.12	−0.12 11.12	−0.06 1.06	−0.06 0.88	0.75	0.31	0.75	−0.05 0.60	−0.10 0.70	0.12	6	¾	3½
8	±0.06 9.05	2.50	±0.04 10.17	+0.06 −0.04 10.27	+0.07 −0.03 9.15	28°	+0.06 −0.0 ⅞	±0.06 11.75	−0.06 13.31	−0.12 13.37	−0.12 13.37	−0.08 1.12	−0.08 1.00	0.75	0.31	0.75	−0.05 0.66	−0.12 0.75	0.12	6	¾	4

TABLE A2.23 Standard Dimensions of Mechanical (Gland-Type) Joints (ANSI/AWWA C111/A21.11-1985) (*Continued*)

Nominal pipe size	A‡ Plain end	B	C	D	F	ϕ deg	X†	J	K_1§		K_2§	L	M	N	O	P	S*		Y	Bolts¶		
									Centrifugal pipe	Pit cast pipe and fittings							Centrifugal pipe	Pit cast pipe and fittings		No	Size	Length
10	±0.06 11.10	2.50	+0.06 −0.04 12.22	+0.06 −0.04 12.34	+0.07 −0.03 11.20	28°	+0.06 −0.0 ⅞	±0.06 14.00	−0.06 15.62	−0.12 15.69	−0.12 15.62	−0.08 1.19	−0.08 1.00	0.75	0.31	0.75	−0.06 0.72	−0.12 0.80	0.12	8	¾	4
12	±0.06 13.20	2.50	+0.06 −0.04 14.32	+0.06 −0.04 14.44	+0.07 −0.03 13.30	28°	+0.06 −0.0 ⅞	±0.06 16.25	−0.06 17.88	−0.12 17.94	−0.12 17.88	−0.08 1.25	−0.08 1.00	0.75	0.31	0.75	−0.06 0.79	−0.12 0.85	0.12	8	¾	4
14	+0.05 −0.08 15.30	3.50	+0.07 −0.05 16.40	+0.07 −0.05 16.54	+0.06 −0.07 15.44	28°	+0.06 −0.0 ⅞	±0.06 18.75	−0.08 20.25	−0.12 20.31	−0.12 20.25	−0.12 1.31	−0.12 1.25	0.75	0.31	0.75	−0.08 0.85	−0.12 0.89	0.12	10	¾	4
16	+0.05 −0.08 17.40	3.50	+0.07 −0.05 18.50	+0.07 −0.05 18.64	+0.06 −0.07 17.54	28°	+0.06 −0.0 ⅞	±0.06 21.00	−0.08 22.50	−0.12 22.56	−0.12 22.50	−0.12 1.38	−0.12 1.31	0.75	0.31	0.75	−0.08 0.91	−0.12 0.97	0.12	12	¾	4½
18	+0.05 −0.08 19.50	3.50	+0.07 −0.05 20.60	+0.07 −0.05 20.74	+0.06 −0.07 19.64	28°	+0.06 −0.0 ⅞	±0.06 23.25	−0.08 24.75	−0.15 24.83	−0.15 24.75	−0.12 1.44	−0.12 1.38	0.75	0.31	0.75	−0.08 0.97	−0.15 1.05	0.12	12	¾	4½
20	+0.05 −0.08 21.60	3.50	+0.07 −0.05 22.70	+0.07 −0.05 22.84	+0.06 −0.07 21.74	28°	+0.06 −0.0 ⅞	±0.06 25.50	−0.08 27.00	−0.15 27.08	−0.15 27.00	−0.12 1.50	−0.12 1.44	0.75	0.31	0.75	−0.08 1.03	−0.15 1.12	0.12	14	¾	4½
24	+0.05 −0.08 25.80	3.50	+0.07 −0.05 26.90	+0.07 −0.05 27.04	+0.06 −0.07 25.94	28°	+0.06 −0.0 ⅞	±0.06 30.00	−0.08 31.50	−0.15 31.58	−0.15 31.50	−0.12 1.62	−0.12 1.56	0.75	0.31	0.75	−0.08 1.08	−0.15 1.22	0.12	16	¾	5
30	+0.08 −0.06 32.00	4.00	+0.08 −0.06 33.29	+0.08 −0.06 33.46	+0.08 −0.06 32.17	20°	+0.06 −0.0 1⅛	±0.06 36.88	−0.12 39.12	−0.18 39.12	−0.18 39.12	−0.12 1.81	−0.12 2.00	0.75	0.38	1.00	−0.10 1.20	−0.15 1.50	0.12	20	1	6
36	+0.08 −0.06 38.30	4.00	+0.08 −0.06 39.59	+0.08 −0.06 39.76	+0.08 −0.06 38.47	20°	+0.06 −0.0 1⅛	±0.06 43.75	−0.12 46.00	−0.18 46.00	−0.18 46.00	−0.12 2.00	−0.12 2.00	0.75	0.38	1.00	−0.10 1.35	−0.15 1.80	0.12	24	1	6
42	+0.08 −0.06 44.50	4.00	+0.08 −0.06 45.79	+0.08 −0.06 45.96	+0.08 −0.06 44.67	20°	+0.06 −0.0 1⅜	±0.06 50.62	−0.12 53.12	−0.18 53.12	−0.18 53.12	−0.12 2.00	−0.12 2.00	0.75	0.38	1.00	−0.10 1.48	−0.15 1.95	0.12	28	1¼	6
48	+0.08 −0.06 50.80	4.00	+0.08 −0.06 52.09	+0.08 −0.06 52.26	+0.08 −0.06 50.97	20°	+0.06 −0.0 1⅜	±0.06 57.50	−0.12 60.00	−0.18 60.00	−0.18 60.00	−0.12 2.00	−0.12 2.00	0.75	0.38	1.00	−0.10 1.61	−0.15 2.20	0.12	32	1¼	6

* The thickness of the bell S shall in all instances be equal to, and generally exceed by at least 10 percent, the nominal wall thickness of the pipe or fitting of which it is a part.

† Cored holes may be tapered an additional 0.06 in in diameter.

‡ In the event of ovalness of the plain end outside diameter, the mean diameter measured by a circumferential tape shall not be less than the minimum diameter shown in the table. The minor acis shall not be less than the above minimum diameter plus an additional minus tolerance of 0.04 in for NPS 8–12, 0.07 in for NPS 14–24, and 0.10 in for NPS 30–48.

§ K_1 and K_2 are the dimensions across the bolt holes. For sizes 2 and 2¼ in, both flange and gland may be oval shaped. For NSP 3–48, the gland may be polygon shaped.

¶ Mechanical joints require the use of specially designed bolts. See ANSI/AWWA C111/A21.11-1985.

principal factors determining the strength of brazed joints. The shear strength may be calculated by multiplying the width by the length of lap by the percentages of bond area and by taking into consideration the shear strength of the alloy used. An empirical method of determining the lap distance is to take it as twice the thickness of the thinner or weaker member joined. Normally this will provide adequate strength, but in cases of doubt, the fundamental calculations should be employed.

Such detailed determinations are generally unnecessary for brazed piping, since commercial brazing fittings are available in which the length of lap is predetermined at a safe value. For brass and copper pipe, cast or wrought bronze and wrought copper fittings are available. A bore of correct depth to accept the pipe is provided, and midway down this bore may be a groove into which, at the time of manufacture, a ring of brazing alloy is inserted. Since the alloy is preplaced in fittings with such a groove, separate feeding of brazing alloy by hand is generally unnecessary.

JOINING DUCTILE OR CAST-IRON PIPE

Bell-and-Spigot Joint

This joint for underground cast-iron pipe was developed as long ago as 1785. Standard dimensions are shown in Table A2.22.

The joint may be made up with lead and oakum, sulfur compounds, or cement. Lead and oakum constitute the prevailing joint sealer for sanitary systems. Bell-and-spigot joints are usually reserved for sanitary sewer systems. These joints are not used in ductile iron pipe.

Mechanical (Gland-Type) Joint

This modification of the bell-and-spigot joints, as designated in Federal Specification WW-P-421 and ANSI/AWWA C111/A21.11, is illustrated in Table A2.23. This joint is commonly used for low and intermediate-pressure gas distribution systems, particularly those conveying natural gas or dry manufactured gas. Mechanical joints are also used for water lines, sewage, and process piping. In the mechanical (gland-type) joint shown in Fig. A2.30, the lead and oakum of the conventional bell-and-spigot joint are supplanted by a stuffing box in which a rubber or composition packing ring, with or without a metal or canvas tip or canvas backing, is compressed by a ductile cast-iron follower ring drawn up with bolts. In addition to making an inherently tight joint even under considerable pressure, this arrangement has the advantage of permitting relatively large lateral deflections (3½° to 7°), as well as longitudinal expansion or contraction. For more details, refer to AWWA C600, Standard for Installation of Ductile-Iron Water Mains and Their Appurtenances.

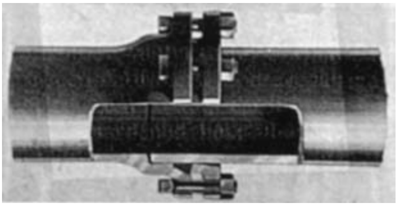

FIGURE A2.30 Mechanical (gland-type) joint for cast-iron pipe.

Tyton Joint

The Tyton joint is designed to contain an elongated grooved gasket. The inside contour of the socket bell provides a seat for the circular rubber in a modified bulb-shaped gasket. An internal ridge in the socket fits into the groove of the gasket. A slight taper on the plain end of the pipe facilitates assembly.

Standard dimensions are given in Table A2.24. The maximum joint deflection angle is 5° for sizes through NPS 12 (DN 300), 4° for NPS 14 (DN 350) and NPS 16 (DN 400), and 3° for NPS 18 (DN 450), NPS 20 (DN 500), and NPS 24 (DN 600). Either all-bell U.S. standardized mechanical joint fittings or bell-and-spigot all-bell fittings with poured or cement joints can be used with Tyton joint pipe.

Mechanical Lock-Type Joint

For installations where the joints may tend to come apart owing to sag or lateral thrust in the pipeline, a mechanical joint having a self-locking feature is used to resist end pull. This joint is similar to the gland-type mechanical joint except that in the locked joint the spigot end of the pipe is grooved or has a recess to grip the gasket. Although only slight expansion or contraction can be accommodated in this type of joint, it does allow the usual 3½° to 7° angular deflection. The lock-type joint finds application aboveground in the process industries and in river crossings on bridges or trestles, as well as in submarine crossings or in unusually loose or known marshy soils. Where the locking feature is on the spigot rather than on the bell, this type of pipe can be used with the regular line of mechanical joint fittings.

Mechanical Push-On-Type Joint

Where a low-cost mechanical joint is desired, the roll-on type can be used. In this joint, a round rubber gasket is placed over the spigot end and is pulled into the bell by mechanical means, thus pulling the ring into place in the bottom of the bell. Outside the rubber gasket, braided jute is wedged behind a projecting ridge in the bell. This serves to confine the gasket under pressure in the joint. A bituminous compound is used to seal the mouth of the bell and to aid in retaining the hemp and the rubber gasket. Either bell-and-spigot or mechanical (gland-type) fittings are used with this line of pipe. Push-on joints are made in accordance with ANSI/AWWA C111/A21.11.

Mechanical Screw-Gland-Type Joint

This type of mechanical joint for cast-iron pipe makes use of a coarse-threaded screw gland drawn up by means of a spanner wrench to compress a standard rubber or composition packing gasket. The joint allows from 2° to 7° angular deflection, as well as expansion or contraction without danger of leaks. A lead ring, inserted in the bell ahead of the gasket, seals off the contents of the line from the gasket. The ring also provides an electric circuit through the joint for thawing out frozen underground mains and service lines by the electrical method. The screw-gland joint is used in piping which conveys water, gas, oil, and other fluids at considerable pressure. The gaskets and lead rings are interchangeable with those used in equivalent lines of mechanical joints of the bolted-gland type. A full line of fittings is available for use with screw-gland pipe.

TABLE A2.24 Standard Dimensions of Tyton Joints

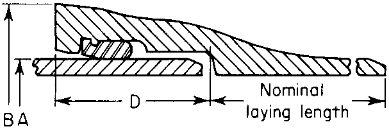

Nominal pipe size	Class	Thickness designation	Thickness of pipe, in	OD of pipe A	OD of bell B	Depth of socket D	Weight (approx) (lb)		
							Barrel per foot	Bell	18-ft length*
3	Through 350	22	0.32	3.96	6.08	3.00	11.4	11	215
4	Through 350	22	0.35	4.80	7.22	3.15	15.3	14	290
6	Through 350	22	0.38	6.90	9.47	3.38	24.3	25	460
8	Through 350	22	0.41	9.05	12.00	3.69	34.7	41	665
10	Through 250	22	0.44	11.10	14.20	3.75	46.0	54	880
	300	23	0.48				50.0		955
	350	24	0.52				53.9		1025
12	Through 200	22	0.48	13.20	16.35	3.75	59.8	66	1140
	250, 300	23	0.52				64.6		1230
	350	24	0.56				69.4		1315
14	50	21	0.48	15.30	19.15	5.00	69.7	78	1335
	100, 150	22	0.51				73.9		1410
	200	23	0.55				79.5		1510
	250, 300	24	0.59				85.1		1610
	350	25	0.64				92.0		1735
16	Through 150	22	0.54	17.40	21.36	5.00	89.2	96	1700
	200	23	0.58				95.6		1815
	250	24	0.63				103.6		1960
	300, 350	25	0.68				111.4		2100
18	50	21	0.54	19.50	23.56	5.00	100.4	114	1920
	100, 150	22	0.58				107.6		2050
	200	23	0.63				116.5		2210
	250	24	0.68				125.4		2370
	300	25	0.73				134.3		2530
	350	26	0.79				144.9		2720
20	50	21	0.57	21.60	25.80	5.00	117.5	133	2250
	100, 150	22	0.62				127.5		2430
	200	23	0.67				137.5		2610
	250	24	0.72				147.4		2785
	300	25	0.78				159.2		3000
	350	26	0.84				170.9		3210
24	50	21	0.63	25.80	30.32	5.00	155.4	179	2975
	100	22	0.68				167.4		3190
	150	23	0.73				179.4		3410
	200, 250	24	0.79				193.7		3665
	300	25	0.85				207.9		3920
	350	26	0.92				224.4		4220

* Includes weight of bell.

Ball-and-Socket Joints

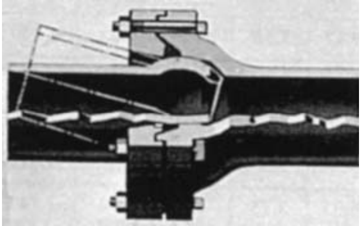

FIGURE A2.31 Ball-and-socket mechanical joint for cast-iron pipe.

For river crossings, submarine lines, or other places where great flexibility is necessary, ductile cast-iron pipe can be obtained with ball-and-socket joints of the mechanical-gland types, as shown in Fig. A2.31. Provision is made for longitudinal expansion and contraction, and a positive stop against disengagement of the joint is a feature of the design. As much as 15° angular deflection can be accommodated without leakage. This pipe is heavy enough to remain underwater where laid without requiring river clamps or anchorage devices. The pipe may be pulled across streams with a cable, since the joints are positively locked against separating, or it may be laid directly from a barge, bridge, or pontoons, without the services of a diver. The mechanical ball-and-socket joint is suitable for use with water, sewage, air, gas, oil, and other fluids at considerable pressure. Either bell-and-spigot or mechanical (gland-type) fittings can be used with this line of pipe, although the integral ball present on the spigot end of some designs has to be cut off before the pipe can be inserted in a regular bell.

Universal Pipe Joints

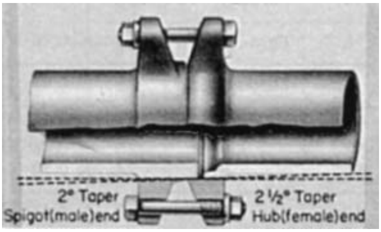

FIGURE A2.32 Universal cast-iron pipe joint.

This type of cast-iron pipe joint (shown in Fig. A2.32) has a machined taper seat which obviates the need for caulking or for a compression gasket. The joint is pulled up snugly with two bolts, after which the nuts are backed off slightly, thus enabling the lock washers to give enough to avoid overstressing the socket or lugs. Pipe is made in 12- to 20-ft (3.5- to 6-m) lengths to the usual pressure classes and can be bought as Type III under Federal Specification WW-P-421. Universal-joint fittings are available for use with the pipe. This type of joint is used to some extent in pipe diameters of NPS 4 (DN 100) to NPS 24 (DN 600) for underground water supply systems; but it is not considered suitable for gas service, and it does not permit much angular displacement or expansive movement.

Compression-Sleeve Coupling

The type of joint shown in Fig. A2.33 is used with plain-end pipe of either cast iron or steel. It is widely known under the trade names of Dresser coupling and Dayton coupling. Compression sleeve couplings are used extensively for air, gas, oil, water, and other services above- or underground. With a joint of this type, it is necessary to anchor or brace solidly at dead ends or turns to prevent the line from pulling apart. Compression couplings and fittings with screwed packing glands are available for use with small-size cast-iron or steel pipe. In welded transmission lines for oil or gas where any significant change in temperature is expected, a certain

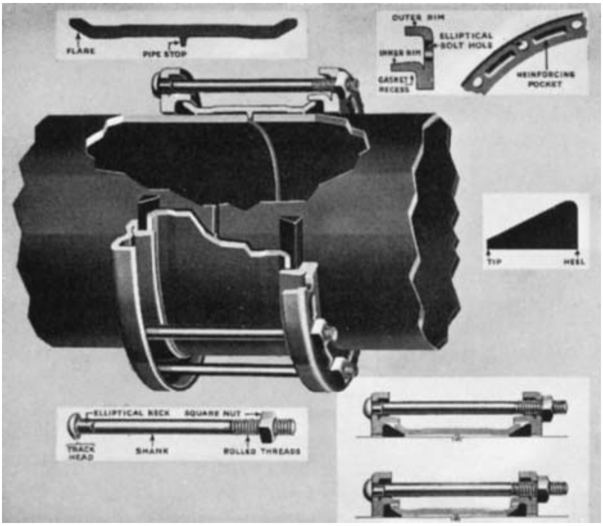
FLARE
PIPE STOP
OUTER RIM
ELLIPTICAL BOLT HOLE
INNER RIM
GASKET RECESS
REINFORCING POCKET
TIP
HEEL
ELLIPTICAL NECK
SQUARE NUT
TRACK HEAD
SHANK
ROLLED THREADS

FIGURE A2.33 Compression sleeve (Dresser) coupling for plain-end cast-iron or steel pipe.

percentage of the joints may be made up with compression couplings instead of welding in order to allow for expansion.

Grooved Segmented-Ring Coupling

The type of split coupling shown in Fig. A2.34 is used with either ductile cast-iron or steel pipe that has grooves near the ends which enable the coupling to grip the pipe, in order to prevent disengagement of the joint. The couplings are manufactured in a minimum of two segments for small pipe sizes and several segments for large pipe sizes. Grooved-end fittings are available for use with the couplings. With proper

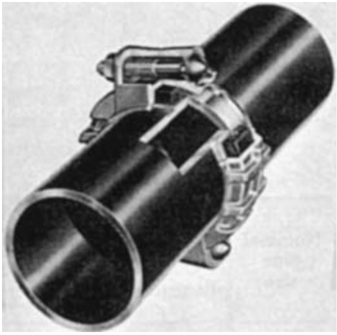

FIGURE A2.34 Victualic coupling for grooved-end cast-iron or steel pipe.

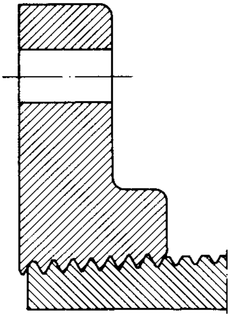

FIGURE A2.35 Screwed-on cast-iron flange.

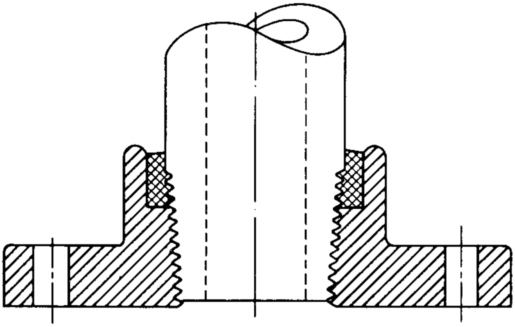

FIGURE A2.36 High-hub cast-iron flanges with bitumastic to protect the exposed threads.

choice of gasket material, the joint is suitable for use above- or underground with nearly any fluid or gas. The joint's advantages are its

- Ability to absorb minor angular and axial deflections
- Ability to increase gasket sealing force with increased system pressure

Refer to AWWA C.606, Standard for Grooved and Shouldered Joints.

TABLE A2.25 Standard Dimensions of Class 125 Flanged Joints for Silver Brazing with Centrifugally Cast Pipe

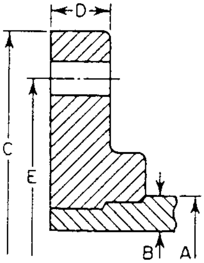

Nominal pipe size	Pipe	Flanges				Bolts	
	Outside diameter *A*	Outside diameter *C*	Thickness* *D*	Bolt circle *E*	Weight each (lb)	Number	Diameter
2	2.50	6	¾	4¾	4	4	⅝
3	3.96	7½	1	6	7	4	⅝
4	4.80	9	1⅛	7½	13	8	⅝
6	6.90	11	1¼	9½	17	8	¾
8	9.05	13½	1⅜	11¾	27	8	¾
10	11.10	16	1½	14¼	38	12	⅞
12	13.20	19	1½	17	58	12	⅞

* Thickness *D* is slightly heavier than for standard cast-iron flanges in ASME B16.1-1989.

- Simplicity for rapid erection or dismantling for systems requiring frequent disassembly.

The coupling is also available in a style where grooving of the pipe ends is not required. Joint separation is prevented by the use of hardened steel inserts (teeth) which grab the mating pipe ends.

Flanged Joints

Flanged ductile or cast-iron pipe is used aboveground for low and intermediate pressures in water-pumping stations, gas works, power and industrial plants, oil refineries, booster stations for water, and gas and oil transmission lines. Cast iron flanges usually are faced and drilled according to ASME B16.1. For flanged joints in a ductile iron pipe, refer to ASME B16.42, ANSI/AWWA C110/A21.10, C111/A21.11, C115/A21.15, and C153/A21.53. Cast-iron pipe is made both with integrally cast flanges and with threaded companion flanges for screwing onto the pipe (as shown in Figs. A2.35 and A2.36). In the latter case, the outside diameter of the pipe conforms to iron pipe size (IPS) dimensions to allow for the threads provided. It is available in sizes NPS 3 (DN 50) through NPS 24 (DN 600) and in length to 18 ft (5.5 m). For lengths less than 3 ft (1 m), in sizes NPS 3 (DN 50) through NPS 12 (DN 300), the flanges may be cast integrally with the pipe, rather than screwed on the pipe, at the manufacturer's option.

Standard dimensions of flanged joints for silver brazing are shown in Table A2.25.

CONCRETE, CEMENT, AND CEMENT-LINED PIPE

Nonreinforced Concrete Pipe

Nonreinforced concrete pipe for the conveyance of sewage, industrial waste, and storm water is made in sizes from NPS 4 to NPS 36 (DN 100 to DN 900). It is produced in accordance with ASTM Specification C14, Standard Specifications for Concrete Sewer Storm Drain and Culvert Pipe.

Nonreinforced-concrete drain tile is used for land drainage and for subsurface drainage of highways, railroads, airports, and buildings. It is made in sizes from NPS 4 through 36 (DN 100 through 900) in accordance with ASTM Specification C412, Standard Specification for Concrete Drain Tile, and AASHO M178, Standard Specification for Concrete Drain Tile. Drain tile is available in the standard quality, extra-quality, and special-quality classifications.

Perforated concrete pipe used for under-drainage is made in accordance with ASTM Specification C444, Specifications for Perforated Concrete Pipe. This pipe is also made in sizes NPS 4 through 36 (DN 100 through 900) and is available in the standard-strength and extra-strength classification.

Concrete irrigation pipe, used for the conveyance of irrigation water under low hydrostatic heads and for land drainage, is made in sizes NPS 4 through 24 (DN 100 through 600) in accordance with ASTM Specification C118, Standard Specifications for Concrete Pipe for Irrigation or Drainage.

Nonreinforced-concrete irrigation pipe for use with rubber-type gasket joints is made for conveyance of irrigation water at water pressures of 1 bar (35 ft of head) or higher depending on the diameter. Such pipe is made in sizes NPS 6 through 24 (DN 100 through 600) in accordance with ASTM Specification C505, Specifications for Nonreinforced Concrete Irrigation Pipe with Rubber Type Gasket Joints. Physical and dimensional requirements of standard-strength bell-and-spigot nonreinforced-concrete sewer pipe are tabulated in Table A2.26.

Jointing. Rubber-gasketed joints for C14 and C76 pipe are covered by ASTM Specification C443, Joints for Circular Concrete Sewer and Culvert Pipe, Using Flexible, Watertight, Rubber-Type Joints.

Reinforced-Concrete Pipe

Reinforced-concrete pipe for the conveyance of sewage, industrial wastes, and storm water and for the construction of culverts is made in sizes from NPS 12 to 144 (DN 300 through 3600). Reinforced-concrete pipe may or may not be manufactured for use with rubber gaskets to seal the joints. It is usually manufactured in accordance with the following specifications:

- ASTM C76, Specifications for Reinforced Concrete Culvert, Storm Drain and Sewer Pipe
- AASHO M170, Specifications for Reinforced Concrete Culvert, Storm Drain and Sewer Pipe
- Federal SS-P-375-Pipe, Concrete (Reinforced, Sewer)

Reinforced-concrete pipe may be made with either tongue-and-groove or bell-and-spigot joints. When made for use with rubber gaskets, the joints must conform to ASTM Specification C443 or AASHO Specification M198, Specifications for Joints for Circular Concrete Sewer and Culvert Pipe, Using Flexible Watertight, Rubber-Type Gaskets.

Concrete pipe is available also in both an arch and an elliptical cross section. These pipes are made in accordance with the following specifications:

- ASTM C506, Specifications for Reinforced Concrete Arch Culvert, Storm Drain and Sewer Pipe
- ASTM C507, Specifications for Reinforced Concrete Elliptical Culvert, Storm Drain and Sewer Pipe

In each of the standards covering reinforced-concrete pipe, five strength classes are defined in terms of minimum three-edge bearing load at a crack width of 0.01 in (0.25 mm) and at the ultimate strength of the pipe.

The strength class required for a given installation is determined by computing the earth load and live load which will be transferred to the pipe under the conditions anticipated. This load is then converted to an equivalent three-edge bearing load by dividing it by a bedding factor. The bedding factor depends upon installation conditions and is always greater than 1.0.

Reinforced and Prestressed-Concrete Pressure Pipe

Reinforced-concrete pressure pipe is discussed in detail in Chap. A8.

Cement-Lined Steel, Ductiles, and Cast-Iron Pipe

Refer to Chap. B9 of this handbook.

Cement-lined pipe is well established for use in cold-water lines. Substantial

TABLE A2.26 Physical and Dimensional Requirements of Class 1, Bell-and-Spigot Nonreinforced Concrete Sewer Pipe (ASTM C1488; for Class 2 and Class 3 refer to ASTM C14)

Internal diameter (in) (1)	Min thickness of barrel T (in) (2)	Min laying length*§ L (ft) (3)	Inside diameter at mouth of socket† D_s (in) (4)	Depth of socket L_s (in) (5)	Min. taper of socket HL_s (6)	Min. thickness of socket‡ T_s (7)	Minimum strength (lb/lin ft)		Max. absorption (%) (10)
							Three-edge bearing method (8)	Sand-bearing method§ (9)	
4	⅝	2½	6	1½	1:20	$3T/4$, all sizes	1500	1500	8
6	⅝	2½	8¼	2	1:20		1500	1650	8
8	¾	2½	10¾	2¼	1:20		1500	1950	8
10	⅞	3	13	2½	1:20		1600	2100	8
12	1	3	15¼	2½	1:20		1300	2250	8
15	1¼	3	18¾	2½	1:20		2000	2620	8
18	1½	3	22¼	2¾	1:20		2200	3000	8
21	1¾	3	25¾	2¾	1:20		2400	3300	8
24	2⅛	3	29½	3	1:20		2600	3600	8

* Shorter lengths may be used for closures and specials.

† When pipe is furnished having an increase in thickness over that given in column 2, the diameter *at the inside* of the socket shall be increased by an amount equal to twice the increase of the barrel.

‡ This measurement shall be taken ¼ in from the outer end of the socket.

§ Not included in ASTM Specification C14.

quantities of cement-lined steel pipe are used for other applications where corrosion is more of a problem. The largest user, by far, is the petroleum industry in oil field flow lines, pipelines, tubing, and casing. Cement-lined pipe is particularly suitable for these applications because of the presence in the oil fields of saltwater, hydrogen sulfide, carbon dioxide, and other corrosive material. Other applications include lines in salt works for handling brine, discharge lines in coal mines for carrying highly corrosive sulfur water, lines in paper and pulp mills for handling diluted acids and corrosive waste liquids, and lines in process plants where water or other liquids must be kept free from iron contamination or rust.

Cement-lined pipe is generally joined with screwed seal rings which prevent the corrosive liquid from coming in contact with steel. Flanged joints are also extensively used. Some prefabrication is done of piping assemblies involving welding of the steel joints. Field joining of the preassembled welded assemblies is then done with flanged ends. Cement of course must not be at the pipe ends being welded. After welding, these ends are filled with mortar.

CHAPTER A3
PIPING MATERIALS

James M. Tanzosh
Supervisor, Materials Engineering
Babcock & Wilcox
Barberton, Ohio

The selection of materials for piping applications is a process that requires consideration of material characteristics appropriate for the required service. Material selected must be suitable for the flow medium and the given operating conditions of temperature and pressure safely during the intended design life of the product. Mechanical strength must be appropriate for long-term service, and resist operational variables such as thermal or mechanical cycling. Extremes in application temperature can raise issues with material capabilities ranging from brittle fracture toughness at low temperatures to adequacy of creep strength and oxidation resistance at the other end of the temperature spectrum.

In addition, the operating environment surrounding the pipe or piping component must be considered. Degradation of material properties or loss of effective load-carrying cross section can occur through corrosion, erosion, or a combination of the two. The nature of the substances that are contained by the piping is also an important factor.

The fabricability characteristics of the materials being considered must also be taken into account. The ability to be bent or formed, suitability for welding or other methods of joining, ease of heat treatment, and uniformity and stability of the resultant microstructure and properties all of a given piping material contribute toward or detract from its attractiveness and economy. The selection process should lead to the most economical material that meets the requirements of the service conditions and codes and standards that apply.

Applicable design and construction codes such as the ASME Boiler and Pressure Vessel Code and the ASME B31 Pressure Piping Code identify acceptable materials for piping systems within their jurisdiction. These codes specify the design rules, allowable design stresses, and other properties required to accomplish the design task. However, the information supplied is generally only adequate and intended to assure safe operation under the thermal and mechanical conditions expected under steady-state and sometimes (as in nuclear construction) cyclic operation. These codes do not directly and explicitly address the many other environmental and material degradation issues that should be considered by design and materials engineers in arriving at a piping system that is not only safe to operate but will offer long-term, reliable service and function. Thus, simply designing to "the Code" when selecting materials can sometimes lead to premature end-of-life of piping system components.

This chapter will attempt to identify the important metallurgical characteristics of piping materials and how they can affect or be affected by operation of all of the other materials available to the engineer. Carbon and low-alloy steels come closest to being the ideal construction material. Due to the fact that the majority of piping applications employ iron-based metals, these will be emphasized in this chapter.

MATERIAL PROPERTIES OF PIPING MATERIALS

The behavior of piping material can be understood and predicted by studying a number of properties of the material. Appreciation of how a material will perform must extend all the way down to the atomic components of the material. Metals are crystalline in structure, composed of atoms in precise locations within a space lattice.

The smallest component of the crystalline structure is called a *unit cell,* the smallest repeating building block of the material. For example, iron and iron-based alloys exist in two unit cell forms, the body-centered cubic (BCC) and the face-centered cubic (FCC) structure, shown in Fig. A3.1. They are differentiated in the way the atoms are arranged in repeating patterns. The body-centered cubic structure is represented by a cube with atoms at all eight corners, and one atom in the center of the cube. The face-centered lattice is represented by atoms at the eight corners of the cube, plus one atom located at the center of each of the cube's six faces. The crystal structure naturally assumed by a material dictates some of the fundamental properties of the material. For example, FCC materials are generally more ductile than BCC materials. This is basically because FCC crystals are the most tightly packed of metallic structures and, as such, allow for more planes of atoms to slide across one another with the least amount of resistance (the fundamental atomic motion involved in what is called *plasticity*).

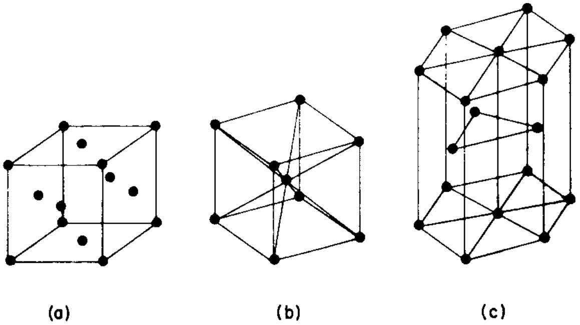

FIGURE A3.1 The three most common crystal structures in metals and alloys. (*a*) Face-centered cubic (FCC); (*b*) body-centered cubic (BCC); (*c*) hexagonal close-packed (HCP).

Metallic materials consist of these and other ordered crystal structures. Some metals, most notably iron, change their crystal structure as temperature varies.

Structure may also change as certain other elements are added in the form of alloying additions. These changes are used to advantage by metallurgists and are the basis for developing and manipulating important material behavior, such as the heat treatability of carbon and low alloy steels.

Plastics may be defined as synthetic materials whose chief component is a resin or resin equivalent. The term *plastic* covers a very broad range of materials that contain, as an essential ingredient, one or more organic polymetic substances. They possess large molecular weight, formed by the chemical combination of carbon-hydrogen atom chains (monomers to polymers). The atomic structure is thus ordered and predictable, but dissimilar from that of metals. Many plastics have greater strength per unit weight than metal, but suffer due to lower impact strength, chemical stability, and thermal and aging stability. However, plastics fill an important niche in the piping engineer's repertoire.

Ceramic materials are composed of the oxides of metal arranged in ordered atomic structures similar to that of metals. The atomic constituents are electronically different, resulting in rigid, predictable behavior, but with an inherent lack of plasticity compared to metals.

Glasses form the other extreme of the atomic structure spectrum. Their atomic makeup is essentially that of a liquid; the structure is actually a solid with no ordered arrangement of atoms.

These atomic characteristics (i.e., the natural arrangement of the atoms, as well as the specific elements involved and their electronic characteristics) establish the fundamental properties of engineering materials. The properties that a engineer requires to design and construct a piping system are a manifestation of the longer-range effects of atomic structure. These properties fall into three categories: chemical, mechanical, and physical.

Chemical Properties of Metals

Chemical properties are herein defined as those material characteristics that are dictated by the elemental constituency of the solid. This is usually measured by the relative atomic weight percent of the various elements (metals or nonmetals) or compounds within the material.

Metals are are not usually used in their pure form. Rather, secondary elements are purposely added to improve or modify their behavior. This addition of secondary elements is called *alloying*, and the elements added fall into two categories, based on the relative size of the atoms. Atoms significantly smaller than those of the parent metal matrix fit into spaces between the atoms in the lattices' interstices and are called *interstitial alloying elements*. Carbon added to iron, creating steel, is the most common example. Larger-sized atoms will substitute for parent metal atoms in their matrix locations, thus the name *substitutional alloying elements*. Examples of this include zinc substituting for copper atoms in copper, creating brass; and tin substituting for copper atoms, creating bronze alloys.

Pure metals possess relatively low strength. Adding an alloying element will increase the strength of a metal's atomic matrix because the atomic lattice is strained locally by the foreign atom, creating a larger impediment for the sliding of planes of atoms across one another during plastic flow. This is true whether the alloying element is interstitial or substitutional; however, the former generally serve as better lattice strengtheners. Strength properties are often improved to the detriment of ductility. Proper alloying, combined with appropriate metal processing and heat treatment, results in optimization of material properties.

Elements are also added to metals to improve or modify their corrosion or oxidation characteristics, or to improve manufacturability (e.g., machineability) and/or electrical properties, among other effects. However, it is important to note that alloying done to optimize one material property may act to the detriment of others.

Carbon steels, the most common of the construction materials, always contain the elements carbon, manganese, phosphorous, sulfur, and silicon in varying amounts. Small amounts of other elements may be found either entering as gases during the steel-making process (hydrogen, oxygen, nitrogen), or introduced through the ores or metal scrap used to make the steel (nickel, copper, molybdenum, chromium, tin, antimony, etc.). The specific effect of each of these elements on steel properties will be addressed later in the chapter. Addition of significant quantities of the interstitial element carbon will result in high strength and hardness—but to the detriment of formability and weldability. A great amount of research has gone into the development of the principal metals used in piping design and construction; thus the specification limits must be vigorously adhered to in order to assure reliability, predictability, and repeatability of material behavior.

The number of elements alloyed with a parent metal, and the acceptable range of content of each, are identified in the material specification (e.g., ASTM, API, ASME). Tests appropriate for determining the elemental constituency of an alloy have been standardized and are also described in ASTM specifications. The material specifications also stipulate whether the chemical analysis of an alloy may be reported by analyzing a sample of the molten metal, or taken from a specimen removed from the final product. The former is commonly referred to as a *ladle* analysis, and the latter as a *product* or *check* analysis. This ‘‘chemistry’’ of a construction material is reported on a material test report which may be supplied by the material manufacturer upon request.

Mechanical Properties of Metals

Mechanical properties are critically important to the design process. They are defined as the characteristic response of a material to applied force. The standardized test methods for measuring these properties are described in ASTM specifications.

Properties fall into two general categories, strength and ductility. Some properties, such as material toughness, are dependent on both strength and ductility. The most widely known and used material properties, as defined by ASTM, are described in the following paragraphs.[1]

Modulus of Elasticity (Young's Modulus). The modulus of elasticity is the ratio of normal stress to corresponding strain for tensile or compressive stresses. This ratio is linear through a range of stress, known as Hooke's law. The material behavior in this range is elastic (i.e., if the applied load is released the material will return to its original, unstressed shape). The value of the slope in the elastic range is defined as *Young's Modulus*.

The modulus of elasticity is measured using the tension test, the most widely used test applied to engineering materials. The test consists of applying a gradually increasing load in either tension or compression, in a testing machine, to a standardized test specimen (Fig. A3.2). The applied load is continuously monitored, as is test specimen elongation or contraction under load. These measured quantities are generally represented on a coordinate axis, called a stress-strain curve (Fig. A3.3). The modulus of elasticity and other strength properties are established from this curve. Values of the modulus of elasticity for a number of construction materials are given in Table A3.1

Yield Strength. When a specimen is loaded beyond the point where elastic behavior can be maintained the specimen will begin to deform in a plastic manner. Most materials do not abruptly transform from purely elastic to purely plastic behavior. Rather, a gradual transition occurs as represented by a curve, or *knee*, in the stress-strain curve. Lacking an abrupt and easily definable point representing transition from elastic to plastic behavior, several standardized methods have been defined by ASTM to determine the yield strength used as the engineering property. The most common is termed the *0.2 percent offset method*. In this approach a line is drawn parallel to the elastic portion of the curve anchored to a point displaced 0.2 percent along the strain axis. (Fig. A3.4). The yield strength corresponds to the calculated value of the load indicated at the intersection point of the drawn line, divided by the original cross-sectional area in the gauge length of the tensile specimen. By convention, this test is performed at a constant rate of strain, and is reported as newtons per square meter, or as pounds per square inch of cross section in English units.

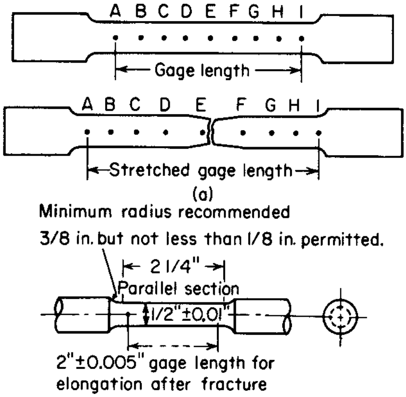
A B C D E F G H I
Gage length
A B C D E F G H I
Stretched gage length
(a)
Minimum radius recommended
3/8 in. but not less than 1/8 in. permitted.
2 1/4"
Parallel section
1/2"±0.01"
2"±0.005" gage length for
elongation after fracture

Note: The gage length, parallel section, and fillets shall be as shown, but the ends may be of any shape to fit the holders of the testing machine in such a way that the load shall be axial.

(b)

FIGURE A3.2 Tension-test specimens. (*a*) Strip specimen showing measurements which are taken to determine elongation; (*b*) standard round specimen with 2-in gauge length.

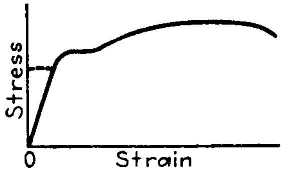

FIGURE A3.3 Stress-strain diagram.

Ultimate Tensile Strength. Upon further increase of applied load under constant strain rate, the specimen will continue to stretch until the loss of load-carrying cross section caused by specimen thinning during the test (due to Poisson's ratio) cannot withstand further load increase. The ultimate tensile strength constitutes the maximum applied load divided by the original specimen cross-sectional area.

Elongation and Reduction of Area. The ductility of the test specimen can be established by measuring its length and minimum diameter before and after testing. Stretch of the specimen is represented as a percent elongation in a given length (usually 2 or 8 in) and is calculated in the following manner:

$$\text{Percent elongation} = \frac{(\text{final length} - \text{original length})}{\text{original length}} \times 100$$

TABLE A3.1 Modulus of Elasticity U.S. Units for Metals*

Material	E = Modulus of elasticity, msi (millions of psi),[1] at temperature °F[2]																				
	−425	−400	−350	−325	−200	−100	70	200	300	400	500	600	700	800	900	1000	1100	1200	1300	1400	1500
Ferrous metals																					
Gray cast iron	...	...	...	...	...	...	13.4	13.2	12.9	12.6	12.2	11.7	11.0	10.2	...	...	...	...	...	...	...
Carbon steels, C ≤ 0.3%	31.9	...	...	31.4	30.8	30.2	29.5	28.8	28.3	27.7	27.3	26.7	25.5	24.2	22.4	20.4	18.0	...	...	...	...
Carbon steels, C > 0.3%	31.7	...	...	31.2	30.6	30.0	29.3	28.6	28.1	27.5	27.1	26.5	25.3	24.0	22.2	20.2	17.9	15.4	...	...	...
Carbon-moly steels	31.7	...	...	31.1	30.5	29.9	29.2	28.5	28.0	27.4	27.0	26.4	25.3	23.9	22.2	20.1	17.8	15.3	...	...	...
Nickel steels, Ni 2%–9%	30.1	...	...	29.6	29.1	28.5	27.8	27.1	26.7	26.1	25.7	25.2	24.6	23.0	...	...	...	...	...	...	...
Cr–Mo steels, Cr ½%–2%	32.1	...	...	31.6	31.0	30.4	29.7	29.0	28.5	27.9	27.5	26.9	26.3	25.5	24.8	23.9	23.0	21.8	20.5	18.9	...
Cr–Mo steels, Cr 2¼%–3%	33.1	...	...	32.6	32.0	31.4	30.6	29.8	29.4	28.8	28.3	27.7	27.1	26.3	25.6	24.6	23.7	22.5	21.1	19.4	...
Cr–Mo steels, Cr 5%–9%	33.4	...	...	32.9	32.3	31.7	30.9	30.1	29.7	29.0	28.6	28.0	27.3	26.1	24.7	22.7	20.4	18.2	15.5	12.7	...
Chromium steels, Cr 12%, 17%, 27%	31.8	...	...	31.2	30.7	30.1	29.2	28.5	27.9	27.3	26.7	26.1	25.6	24.7	23.2	21.5	19.1	16.6	...	...	...
Austenitic steels (TP304, 310, 316, 321, 347)	30.8	...	...	30.3	29.7	29.1	28.3	27.6	27.0	26.5	25.8	25.3	24.8	24.1	23.5	22.8	22.1	21.2	20.2	19.2	18.1
Copper and Copper Alloys																					
Comp. and leaded–Sn bronze (C83600, C92200)	...	...	...	14.8	14.6	14.4	14.0	13.7	13.4	13.2	12.9	12.5	12.0	...	...	...	...	...	...	...	...
Naval brass, Si– & Al–bronze (C46400, C65500, C95200, C95400)	...	...	...	15.9	15.6	15.4	15.0	14.6	14.4	14.1	13.8	13.4	12.8	...	...	...	...	...	...	...	...
Copper (C11000)	...	...	...	16.9	16.6	16.5	16.0	15.6	15.4	15.0	14.7	14.2	13.7	...	...	...	...	...	...	...	...
Copper, red brass, Al–bronze (C10200, C12000, C12200, C12500, C14200, C23000, C61400)	...	...	...	18.0	17.7	17.5	17.0	16.6	16.3	16.0	15.6	15.1	14.5	...	...	...	...	...	...	...	...
90Cu–10Ni (C70600)	...	...	...	19.0	18.7	18.5	18.0	17.6	17.3	16.9	16.6	16.0	15.4	...	...	...	...	...	...	...	...
Leaded Ni–bronze	...	...	...	20.1	19.8	19.6	19.0	18.5	18.2	17.9	17.5	16.9	16.2	...	...	...	...	...	...	...	...
80Cu–20Ni (C71000)	...	...	...	21.2	20.8	20.6	20.0	19.5	19.2	18.8	18.4	17.8	17.1	...	...	...	...	...	...	...	...
70Cu–30Ni (C71500)	...	...	...	23.3	22.9	22.7	22.0	21.5	21.1	20.7	20.2	19.6	18.8	...	...	...	...	...	...	...	...
Nickel and Nickel Alloys																					
Monel 400 (N04400)	28.3	...	...	27.8	27.3	26.8	26.0	25.4	25.0	24.7	24.3	24.1	23.7	23.1	22.6	22.1	21.7	21.2	...	...	...
Alloys G, G1, 20 Mod. (N06007, N08320)	30.3	...	...	29.5	29.2	28.6	27.8	27.1	26.7	26.4	26.0	25.7	25.3	24.7	24.2	23.6	23.2	22.7	...	...	...
Alloys 800, 800H, × (N08800, N08810, N06002)	31.1	...	...	30.5	29.9	29.4	28.5	27.8	27.4	27.1	26.6	26.4	25.9	25.4	24.8	24.2	23.8	23.2	...	...	...
Alloys C–4, C276 (N06455, N10276)	32.5	...	...	31.6	31.3	30.6	29.8	29.1	28.6	28.3	27.9	27.6	27.1	26.5	25.9	25.3	24.9	24.3	...	...	...
Nickel 200, 201, Alloy 625 (N02200, N02201, N06625)	32.7	...	...	32.1	31.5	30.9	30.0	29.3	28.8	28.5	28.1	27.8	27.3	26.7	26.1	25.5	25.1	24.5	...	...	...
Alloy 600 (N06600)	33.8	...	...	33.2	32.6	31.9	31.0	30.2	29.9	29.5	29.0	28.7	28.2	27.6	27.0	26.4	25.9	25.3	...	...	...
Alloy B (N10001)	33.9	...	...	33.3	32.7	32.0	31.1	30.3	29.9	29.5	29.1	28.8	28.3	27.7	27.1	26.4	26.0	25.3	...	...	...
Alloy B-2 (N10665)	34.2	...	...	33.3	33.0	32.3	31.4	30.6	30.1	29.8	29.4	29.0	28.6	27.9	27.3	26.7	26.2	25.6	...	...	...
Unalloyed Titanium																					
Grades 1, 2, 3, and 7	...	...	...	...	...	...	15.5	15.0	14.6	14.0	13.3	12.6	11.9	11.2	...	...	...	...	...	...	...

* These data are for information, and it is not to be implied that materials are suitable for all the temperatures shown. Data are taken from Code for Pressure Piping, ASME B31.1-1995.

[1] To convert psi into kPa, multiply the tabulated values by 6.895×10^6.

[2] To convert °F into °C, divide (tabulated °F − 32) by 1.8.

TABLE A3.1 Modulus of Elasticity* (*Continued*)

	E = Modulus of elasticity, msi (millions of psi), at temperature, °F									
Material	−425	−400	−350	−325	−200	−100	70	200	300	400
Aluminum and Aluminum Alloys										
Grades 443, 1060, 1100, 3003, 3004, 6061, 6063, (A24430, A91060, A91100, A93003, A93004, A96061, A96063)	11.4	. . .	. . .	11.1	10.8	10.5	10.0	9.6	9.2	8.7
Grades 5052, 5154, 5454. 5652 (A95052, A95154, A95454, A95652)	11.6	. . .	. . .	11.3	11.0	10.7	10.2	9.7	9.4	8.9
Grades 356, 5083, 5086, 5456 (A03560,A95083, A95086, A95456)	11.7	. . .	. . .	11.4	11.1	10.8	10.3	9.8	9.5	9.0

The diameter of the test specimen will decrease, or *neck down*, in ductile materials. Another standard measure of ductility is the reduction of area of the specimen, defined as follows:

$$\text{Percent reduction of area} = \frac{(\text{original cross-sectional area} - \text{final area})}{\text{original area}} \times 100 \tag{A3.1}$$

Hardness. This is a measure of the material's ability to resist deformation, usually determined by a standardized test where the surface resistance to indentation is measured. The most common hardness tests are defined by the indentor type and size, and the amount of load applied. The hardness numbers constitute a non-dimensioned, arbitrary scale, with increasing numbers representing harder surfaces. The two most common hardness test methods are Brinell Hardness and Rockwell Hardness, with each representing a standardized test machine with its own unique hardness scales. Hardness loosely correlates with ultimate tensile strength in metals (Fig. A3.5). Approximate hardness conversion numbers for a variety of material types, including steels, can be found in ASTM Specification E140.

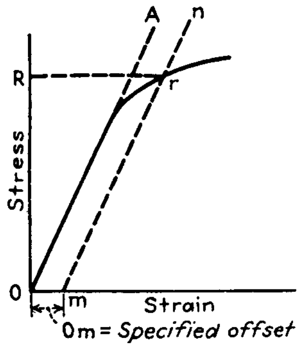

FIGURE A3.4 Offset method of determining yield strength.

Toughness. Sudden fracture, exhibiting little ductility in the vicinity of the break, occurs in certain metals when load is rapidly applied. The capability of a material to resist such a brittle fracture is a measure of its toughness.

Highly ductile materials (those possessing an FCC lattice, for example) exhibit considerable toughness across a full range of temperatures. Other materials, such as BCC-based carbon steels, possess a level of toughness that is dependent on the metal temperature when the load is applied. In these metals, a transition from brittle to ductile behavior occurs over a narrow range of temperatures.

The two most common methods used to measure metal toughness are the Charpy

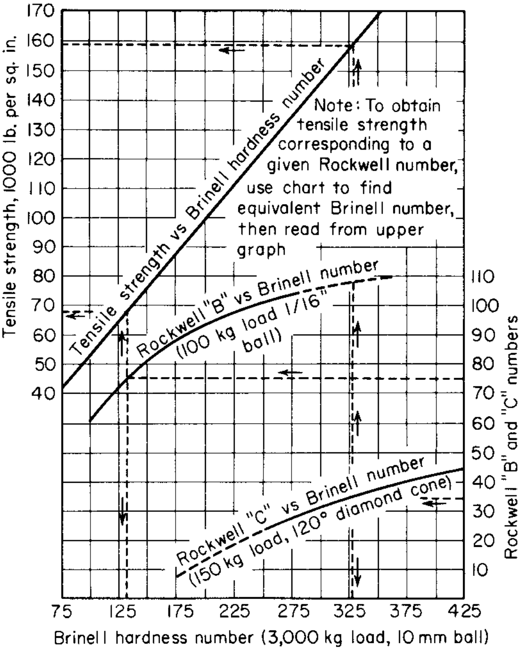

FIGURE A3.5 Conversion chart for Brinell and Rockwell hardness numbers, giving corresponding tensile strength for steel. Based on hardness conversion table. (*SAE Handbook*, 1964.)

Impact test, defined in ASTM specification E 23, and the Drop-Weight test, defined in ASTM E 208. The Charpy test employs a small machined specimen with a machined notch that is struck by a pendulum weight (Fig. A3.6). The energy loss to the pendulum as it passes through and breaks the specimen (Fig. A3.7), measured in kilojoules or ft · lb of force, is a measure of the toughness of the specimen. Typical impact behavior versus test temperature is shown in Fig. A3.8.

The Drop-Weight test is similar in principle but employs a larger specimen with a brittle, notched weld bead used as the crack starter (Fig. A3.9). A weight is dropped from a height onto the specimen, which had been cooled or heated to the desired test temperature. The test determines the *nil-ductility transition temperature* (NDTT), defined as the specimen temperature when, upon striking, the crack propagates across the entire specimen width.

The Charpy brittle transition temperature (sometimes called the *Charpy fix temperature)* and the Drop Weight NDTT are both important design considerations for those materials that can exhibit poor toughness and that may operate in lower temperature regimes. In pressure vessel and piping design codes, limits are placed on material minimum use temperature based on adding an increment of margin over and above the Charpy fix or NDTT. Operating at or above this elevated temperature is then usually sufficient to avoid brittle, catastrophic failure, as for example is the case when at a temperature on the "upper shelf" of the Charpy V-notch toughness-versus-temperature curve.

On subsize specimens the length, notch angle, and notch radius are constant (see Fig. 6); depth (*D*), notch depth (*N*), and width (*W*) vary as indicated below.

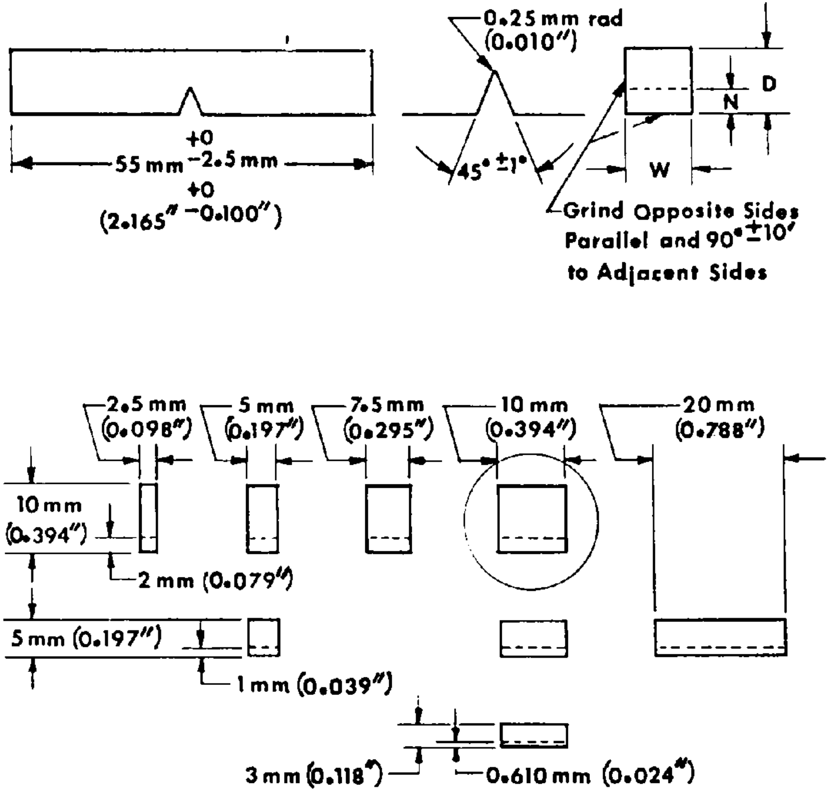
0.25 mm rad
(0.010″)
D
N
W
55 mm +0 −2.5 mm
(2.165″ +0 −0.100″)
45° ±1°
Grind Opposite Sides
Parallel and 90° ±10′
to Adjacent Sides
2.5 mm
(0.098″)
5 mm
(0.197″)
7.5 mm
(0.295″)
10 mm
(0.394″)
20 mm
(0.788″)
10 mm
(0.394″)
2 mm (0.079″)
5 mm (0.197″)
1 mm (0.039″)
3 mm (0.118″)
0.610 mm (0.024″)

NOTE 1—Circled specimen is the standard specimen (see Fig. 6).

NOTE 2—Permissible variations shall be as follows:

Cross-section dimensions	±1 % or ±0.075 mm (0.003 in.), whichever is smaller
Radius of notch	±0.025 mm (0.001 in.)
Depth of notch	±0.025 mm (0.001 in.)
Finish requirements	2 µm (63 µin.) on notched surface and opposite face; 4 µm (125 µin.) on other two surfaces

FIGURE A3.6 Charpy (simple beam) subsize (Type A) impact test specimens. (ASTM Specification E23.)

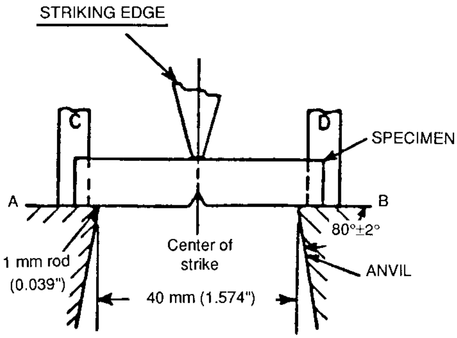

FIGURE A3.7 Charpy V-notch specimen placement during strike by testing anvil. (ASTM Specification E23.)

Fatigue Resistance. The ability of a metal to resist crack initiation and further propagation under repeated cyclic loading is a measure of its fatigue resistance. Several standardized test methods have been developed to test metals, machined to particular geometries, where applying a repeating load range. Loads are generally applied through bending, cantilevered, or push-pull load application in suitably outfitted testing machines. Either constant applied stress or strain ranges can be employed to determine material response.

The most common representation of fatigue test data is an *S-N* curve, relating stress (*S*) required to cause specimen failure in a given number of cycles (*N*) (Fig.

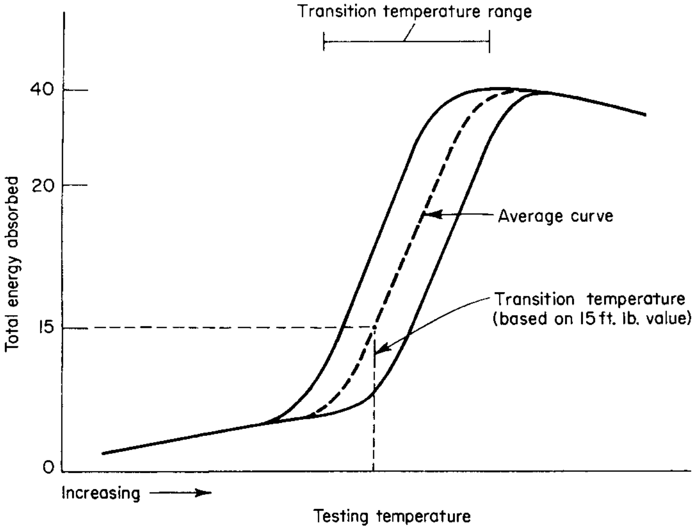

FIGURE A3.8 Transition temperature range and transition temperature in Charpy impact test.

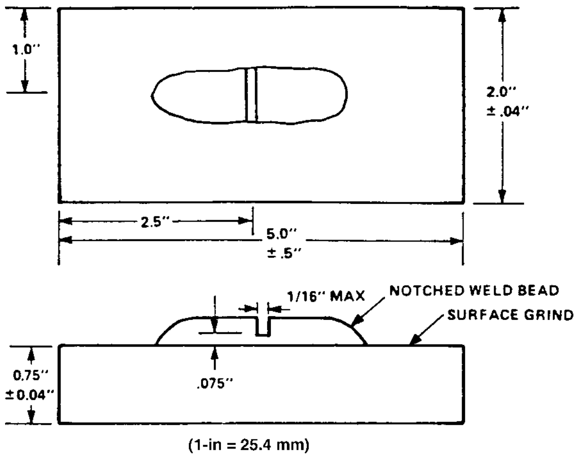

FIGURE A3.9 Drop-weight test specimen with brittle weld deposit on specimen face; machined notch to act as crack starter. Impact load applied from side opposite weld deposit. (ASTM Specification E208.)

A3.10a). These tests are generally performed on smooth specimens, but they can also be run with stress-concentrating mechanisms such as notches machined into the specimen surface. The effect of stress concentrations on fatigue life cycles can also be estimated from the smooth specimen *S-N* curve by calculating the intensified stress due to the particular geometry, and intersecting the curve at that point on the stress axis.

As the applied load range decreases, ferritic steels exhibit a point at which an infinite number of cycles can be absorbed without causing failure. This level of stress is called the *endurance limit.* Many of the other metals do not exhibit this behavior, but rather exhibit an increasing, but finite, number of cycles to failure with decreasing cyclic load (Fig. A3.10b).

The fatigue resistance of a material at a given applied stress or strain range is a function of a number of variables, including material strength and ductility. Results may vary significantly for different surface finishes, product forms of the same material (Fig. A3.11), material internal cleanliness, test specimen orientation, and levels of residual stress, among other factors. Variations in the test environment can also have a profound effect on test results (Fig. A3.12). Therefore, fatigue test results characteristically exhibit significant scatter.

Fatigue design curves are generated from test data by applying large safety margins to the average property curve. In U.S. design codes, the fatigue design curve is commonly generated by taking the lesser of 1⁄20 times the cycles to failure, or ½ of the stress to cause failure. A new curve is constructed taking the lower bound of these two factored curves.

When considering metal fatigue in design, a further safety margin is often also applied against the cycles-to-failure at a given stress amplitude. For example, if a component is continuously cycled over the same stress range, a design limit on allowable cycles may correspond to the cycle life multiplied by a factor such as 0.8. This is a common safety margin employed in vessel and piping design.

As is normally the case, components may experience a wide variety of cyclic

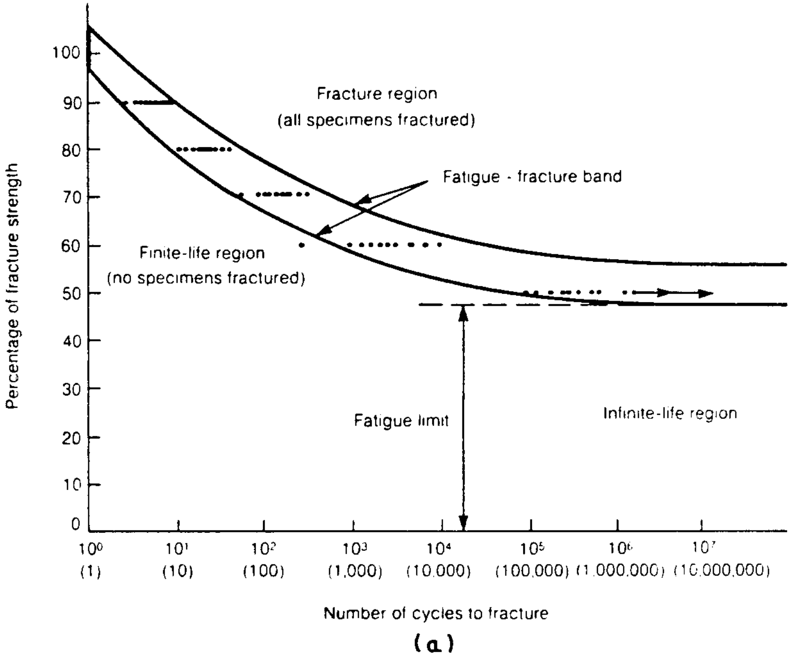

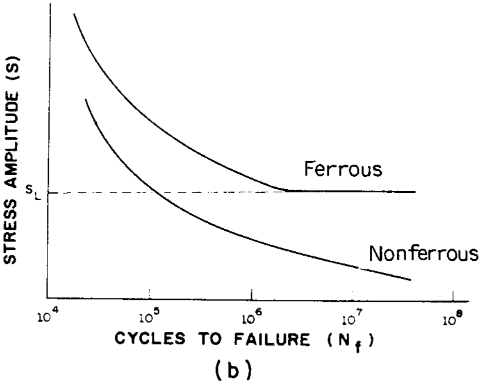

FIGURE A3.10 *S-N* curves that typify fatigue test results (*a*) for testing medium-strength steels and (*b*) showing typical curve shape for ferrous and nonferrous materials. S_L is the endurance limit. (*Atlas of Fatigue Curves*, American Society for Metals, ©1986.)

stress ranges, at various temperatures, over their life. The effect of this array of cyclic parameters on fatigue life can be estimated by an approach referred to as *life fraction summation*. In this design practice, the percentage of life used up in cycling at a certain stress range is calculated, corresponding to the ratio of the number of actual service duty cycles to the total number of cycles to failure at that

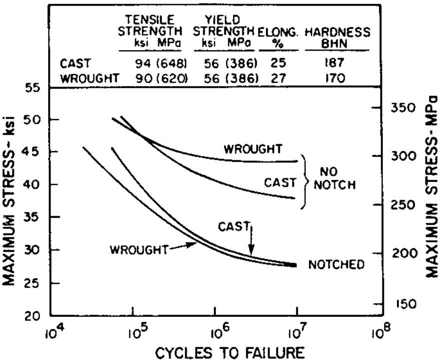

	TENSILE STRENGTH ksi MPa	YIELD STRENGTH ksi MPa	ELONG. %	HARDNESS BHN
CAST	94 (648)	56 (386)	25	187
WROUGHT	90 (620)	56 (386)	27	170

FIGURE A3.11 Fatigue characteristics (*S-N* curve) for cast and wrought 1040 steel in the normalized and tempered condition, both notched and unnotched. R. R. Moore rotating beam tests, $K_t = 2.2$. (*Atlas of Fatigue Curves*, ASM.)

stress range. This calculation is performed for all of the various stress ranges/duty cycles anticipated. The fractions thereby calculated are summed and compared to the design limit (1.0 with no safety margin, or 0.8 or some other value depending on the design safety factor that applies).

Elevated Temperature Tensile and Creep Strength. Tensile tests are performed at elevated temperatures to characterize the material's yield and ultimate tensile

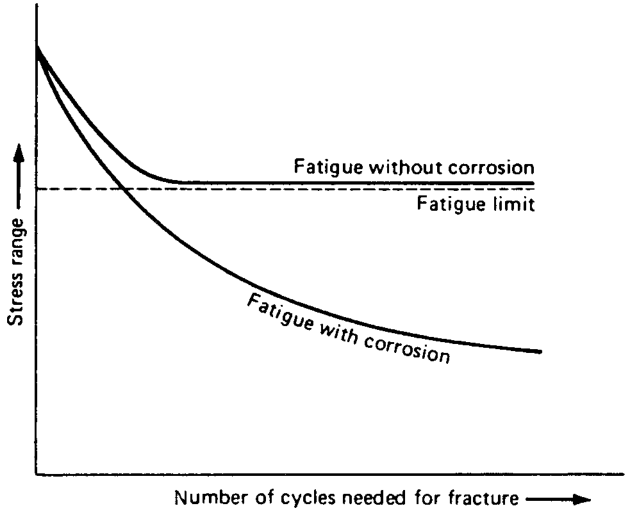

FIGURE A3.12 Effect of alternating stresses with and without corrosion for ferrous material that normally exhibits an endurance limit. (*Atlas of Fatigue Curves*, ASM.)

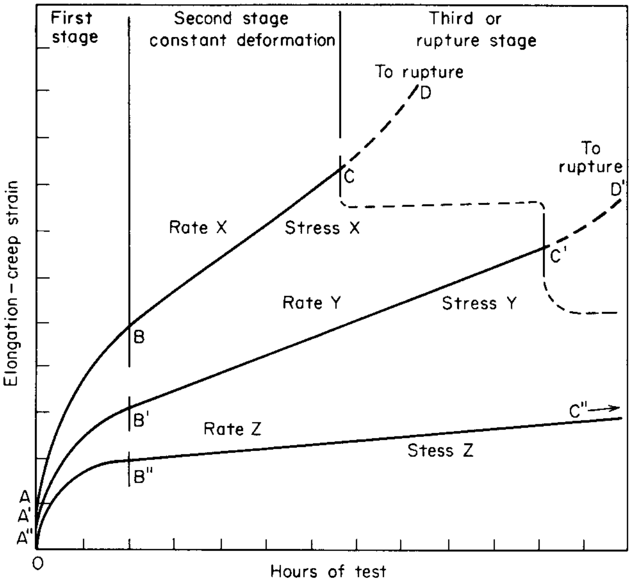

FIGURE A3.13 Creep time versus elongation curves at a given temperature.

properties at potential use temperatures above room temperature. A heating chamber is combined with a conventional tensile testing machine, and special strain measuring extensometers are used that are capable of withstanding the test temperatures. Generally, as temperature increases, yield and ultimate strengths decrease, and ductility increases.

Creep is defined as the time-dependent deformation of a material that occurs under load at elevated temperatures. The test is performed by holding a specimen, similar in configuration to a tensile specimen, at a uniform temperature and a constant load (usually using a dead weight) and allowing the specimen to gradually elongate to ultimate failure. The practice is defined in ASTM Specification E 139.

The simplest test method records only the applied stress (based on original test specimen cross section), time to failure, and total elongation at failure. This is called a *stress rupture test.* If periodic measurements of strain accumulation versus test duration are also taken, the test is referred to as a *creep-rupture test.*

A representation of typical creep strain-versus-time data is shown in Fig. A3.13. Three stages of creep behavior are exhibited. Upon initial loading, instantaneous straining occurs. Almost immediately, the rate of creep strain accumulation (creep rate) is high but continuously decreasing. The test then progresses into a phase where the strain rate slows and becomes fairly constant for a long period of time. Finally, with decreasing load-bearing cross section of the specimen due to specimen stretching and necking, applied stress begins to increase steadily, as does the creep rate, until failure occurs. These three regions are termed the primary, secondary, and tertiary stages of creep. The intent of safe design practice is to avoid the third stage, where strain accumulations are rapid and material behavior less predictable.

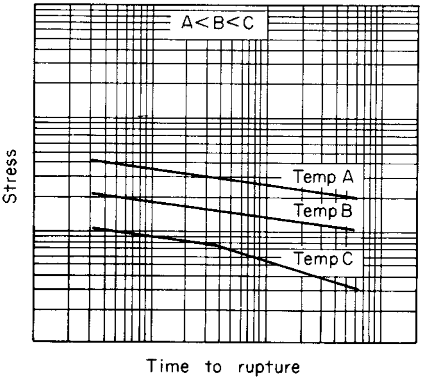

FIGURE A3.14 Typical stress-to-rupture curves.

After accumulating a number of rupture data points (i.e., time to failure of a metal at various applied stresses), the data is generally represented as a stress rupture curve (Fig. A3.14). Each curve represents the time to failure at various applied stresses, at a given test temperature. Another useful property that can be measured in these tests is the creep rate during the second stage of creep, for a given applied stress and temperature. This, along with time to onset of the tertiary creep stage, are useful properties to the design engineer and are used in establishing allowable design tension stresses in design codes.

Metals that experience creep will accumulate a progressively larger amount of microscopic damage to the structure of the material. Damage is first observed microscopically as small cavities, or voids, that begin appearing in the grain boundaries of the metal, particularly at triple points (i.e., where three grains come together). Further progression of damage entails formation of more voids along many of the adjacent grain boundaries, until ultimately they link together to form grain boundary microcracks. With more time, these form larger macrocracks that lead to ultimate failure of the metal component.

The determination of a metal's degree of creep damage, and its consequence on the continued safe operation of the component, has developed into a sophisticated science referred to as component condition assessment, or estimation of remaining life. This will be addressed in more detail later in the chapter.

A practice essentially identical to cyclic fraction life summation used in fatigue design can be employed in material creep analysis to estimate the percentage of creep life expended. Here the individual life fraction corresponds to the amount of time a component spends at a given stress and temperature, compared to the total time to failure given on the stress rupture curve for the same applied stress and temperature. All of these fractions for all the operating conditions are then added together, and compared to an appropriate design limit (1.0 or less).

Physical Properties of Metals

Physical properties are those, other than mechanical properties, that pertain to the physics of a material. Physical properties of importance to the materials and design engineer are material density, thermal conductivity, thermal expansion, and specific heat.[2]

Density. Density is the ratio of the mass of a material to its volume. In vessel and piping design, the density of a construction material versus its strength per unit area of cross section is often an important consideration.

Thermal Conductivity. This is the characteristic ability of a material to transmit energy in the form of heat from a high-temperature source to a point of lower temperature. The ability to transmit heat is usually expressed as a coefficient of

TABLE A3.2 Thermal Conductivity and Expansion of Piping Material

	Thermal conductivity		Linear thermal expansion average	
Material	$\text{Btu}\Big/\left(\text{hr}\ ^\circ\text{F}\,\frac{\text{ft}^2}{\text{ft}}\right)$	Temperature, °F	Microinch/(in °F)	Temperature range, °F
Pure iron	43	70	6.83	68–212
	28	752	8.97	932–1112
Gray cast iron	27	70	5.83	32–212
	23.7	752		
Malleable cast iron ferritic	. . .	. . .	6.6	70–750
Malleable cast iron pearlitic	. . .	. . .	6.6	70–750
Nodular iron	18 (Pearlitic)	212	6.46	68–212
	20 (Ferritic)	212	6.97	68–600
			7.49	68–1000
			7.69	68–1400
Wrought iron	34	212		
	26	752		
Wrought carbon steel: 0.06 C, 0.38 Mn	34	32	7.83	70–800
			7.95	70–900
			8.02	70–1000
			8.21	70–1100
			8.36	70–1200
0.23 C, 0.635 Mn	30	70		
	25	752	6.50	68–212
	17	2192		
0.435 C, 0.69 Mn	. . .	. . .	6.44	68–212
			8.39	68–1292
1.22 C, 0.35 Mn	26	70		
	22	752	5.89	122–212
	16	2192	9.33	932–1832
Carbon–½ Mo	25.8	212	7.70	68–800
			7.85	68–1000
			7.95	68–1100
			8.07	68–1200
1¼ Cr–½ Mo	17.9	212	7.32	70–800
			7.44	70–900
			7.56	70–1000
			7.63	70–1100
			7.74	70–1200
			7.82	70–1300
2¼ Cr–1 Mo	16.3	212	7.49	70–800
			7.65	70–900
			7.72	70–1000
			7.78	70–1100
			7.84	70–1200
			7.88	70–1300

1. Btu/(hr °F · ft^2/ft) = 0.5780101 Watt/meter^2/°C/meter (W/m^2/°C/m).
2. °C = (°F − 32)/1.8.

TABLE A3.2 Thermal Conductivity and Expansion of Piping Material (*Continued*)

	Thermal conductivity		Linear thermal expansion average	
Material	$\mathrm{Btu}\Big/\left(\mathrm{hr}\ {}^\circ\mathrm{F}\ \frac{\mathrm{ft}^2}{\mathrm{ft}}\right)$	Temperature, °F	Microinch/(in °F)	Temperature range, °F
5 Cr–½ Mo	21.2	212	6.44	0–212
	20.8	392	6.91	70–800
	20.4	572	7.02	70–900
	19.8	752	7.10	70–1000
	19.5	932	7.19	70–1100
			7.31	70–1200
			7.35	70–1300
9 Cr–1 Mo	. . .	. . .	6.28	70–300
			6.60	70–800
			6.75	70–900
			6.81	70–1000
			6.95	70–1100
			7.07	70–1200
			7.13	70–1300
3½% Ni steel	21	212		
	14	1472		
Type 304 wrought	9.4	212	9.6	32–212
	10.3	392	9.9	32–600
	11.0	572	10.2	32–1000
	11.8	752	10.4	32–1200
	12.5	932	11.2	32–1800
CF-8 cast	9.2	212		
	12.1	1000		
Type 316 wrought	9.0	212	8.9	32–212
	12.1	932	9.0	32–600
			9.7	32–1000
			10.3	32–1200
			11.1	32–1500
CF-8M cast	9.4	212	8.9	68–212
	12.3	1000	9.7	68–1000
Type 321 wrought	9.3	212	9.3	32–212
	10.2	392	9.5	32–600
	11.1	752	10.3	32–1000
	11.9	932	10.7	32–1200
	12.8		11.2	32–1500
Type 347 wrought	9.3	212	9.3	32–212
	10.2	392	9.5	32–600
	11.1	572	10.3	32–1000
	11.9	752	10.6	32–1200
	12.8	932	11.1	32–1500
CF-8C cast	9.3	212	9.3	68–212
	12.8	1000	10.3	68–1000
405 wrought	. . .	. . .	6.0	32–212
			6.4	32–600
			6.7	32–1000
			7.5	32–1200

TABLE A3.2 Thermal Conductivity and Expansion of Piping Material (*Continued*)

Material	Thermal conductivity		Linear thermal expansion average	
	$\text{Btu} \Big/ \left(\text{hr}\ ^\circ\text{F}\ \frac{\text{ft}^2}{\text{ft}}\right)$	Temperature, °F	Microinch/(in °F)	Temperature range, °F
CA15 cast	14.5	212	5.5	68–212
	16.7	1000	6.4	68–1000
			6.7	68–1300
410 wrought	14.4	212	6.1	32–212
	16	752	7.2	32–1000
			7.6	32–1832
446 wrought	12.1	212	5.9	32–212
	14.1	932	6.3	32–1000
			7.6	32–1832
CC50 cast	12.6	212		
	17.9	1000	5.9	68–212
	20.3	1500	6.4	68–1000
	24.2	2000		
Aluminum 1100	128	70	12.2	−58 to +68
			13.1	68–212
			13.7	68–392
			14.2	68–572
Aluminum 6061	99 (0 temper)	70	12.1	−76 to +68
	90 (T4 temper)	70	13.0	68–212
	90 (T6 temper)	70	13.5	68–392
			14.1	68–572
Aluminum 43	82 (as cast)	70	12.2	68–212
	94 (annealed)	70	12.8	68–392
			13.3	68–572
Aluminum 356	97 sand cast T51	70	11.9	68–212
	88 sand cast T6	70	12.8	68–392
			13.0	68–572
Copper (DHP)	196	68	9.8	68–572
Red brass	92	68	10.4 cold rolled	68–572
Yellow brass	67	68	11.3	68–572
Admiralty brass	64	68	11.2	68–572
Manganese bronze	61	68	11.8	68–572
Cupronickel (70–30)	17	68	9.0	68–572
Aluminum bronze (3)	44	68	9.0	68–572
Beryllium copper	33–41 cold worked	68	9.3	68–212
			9.4	68–392
	48–68 precipitation hardened		9.9	68–572
Chemical lead	. . .	. . .	16.3	65–212
			14.7	−130 to +66
50/40 SnPb solder	27	129	13.0	60–230

TABLE A3.2 Thermal Conductivity and Expansion of Piping Material (*Continued*)

Material	Thermal conductivity		Linear thermal expansion average	
	$\text{Btu}\Big/\left(\text{hr }^\circ\text{F}\,\frac{\text{ft}^2}{\text{ft}}\right)$	Temperature, °F	Microinch/(in °F)	Temperature range, °F
Nickel (A) wrought...	35	32–212	7.4	77–212
Monel (70 Ni–30 Cu) (wrought)	15	32–212	7.8	32–212
Inconel........................	8.4	70–212	6.4 8.3	68–212 70–1000
Incoloy........................	6.8	32–212	8.0	32–212
Hastelloy B................	6	. . .	5.3 7.8	70–200 70–1600
Hastelloy C................	5	70	6.6 8.2	70–200 70–1600
Tin...............................	36	32	12.8	32–212
Titanium (99.0%).......	9.0–11.5 12.4	68 1500	4.8 5.6 5.7	68–200 68–1200 68–1600
Tantalum.....................	31	68	3.6	

thermal conductivity (k) whose units are a quantity of heat transmitted through a unit thickness per unit time per unit area per unit difference in temperature.

For example:

$$k = \frac{\text{Btu} \cdot \text{ft}}{\text{h} \cdot \text{ft}^2\,{}^\circ\text{F}} \quad \text{or} \quad \frac{\text{cal} \cdot \text{cm}}{\text{sec} \cdot \text{cm}^2\,{}^\circ\text{C}} \tag{A3.2}$$

The lower the value of k, the more resistant the material is to the flow of thermal energy. Good insulators possess low coefficients of thermal conductivity.

Thermal conductivity is a function of the temperature of the material. For example, the coefficient of thermal conductivity of carbon steel decreases as its temperature increases, thereby decreasing its ability to transfer heat energy. Austenitic stainless steels, on the other hand, increase in k value with temperature. However, they remain lower than carbon steels in normal piping system temperature ranges.

Thermal Expansion. Expressed as the coefficient of linear expansion, thermal expansion is a ratio of the change in length per degree of temperature, to a length at a given standard temperature (such as room temperature, or the freezing point of water). The units of the coefficient are length of growth per unit length per degree of temperature. The value of the coefficient varies with temperature.

Specific Heat. This is a measure of the quantity of heat required to raise a unit weight of a material one degree in temperature.

Some values of physical properties of a number of materials of interest are given in Table A3.2 and Table A3.3.

TABLE A3.3 Some Physical Properties of Piping Materials

Material	Density, lb/in^3*	Specific heat, mean (temperature, °F)	Melting temperature,** °F
Pure iron	0.2845	0.112 (122–212) 0.170 (1562–1652)	2781–2799
Gray cast iron	0.251–0.265	....	2150–2360
Malleable cast iron ferritic	0.260–0.265	0.11 (at 70) 0.165 (at 800)	2750
Malleable cast iron pearlitic	0.264	0.11 (at 70) 0.165 (at 800)	2750
Nodular iron	0.257	....	2050–3150
Wrought iron	0.28	....	2750
0.06 C, 0.38 Mn	0.2844	0.115 (122–212) 0.264 (1292–1382)	2600
0.23 C, 0.35 Mn	0.2839	0.116 (122–212) 0.342 (1292–1382)	2600
0.43 C, 0.69 Mn	0.2834	0.116 (122–212) 0.227 (1292–1472)	2600
1.22 C, 0.35 Mn	0.2839	0.116 (122–212) 0.499 (1292–1382)	2600
Carbon–½ Mo	0.28	....	2600–2800
1¼ Cr–½ Mo	0.283	0.114 (122–212)	2600–2800
2¼ Cr–1 Mo	0.283	0.11	2600–2800
5 Cr–½ Mo	0.28	0.11	2700–2800
9 Cr–1 Mo	0.28	0.11	2700–2800
3½% Ni steel	0.28	0.115 (212)	....
Type 304 wrought	0.29	0.12 (32–212)	2550–2650
CF-8 cast	0.28	0.12	2600
Type 316 wrought	0.29	0.12 (32–212)	2500–2550
CF-8M cast	0.28	0.12	2550
Type 321 wrought	0.29	0.12 (32–212)	2550–2600
Type 347 wrought	0.29	0.12 (32–212)	2550–2660
CF-8C cast	0.28	0.12	2550–2600
405 wrought	0.28	0.11	2700–2790
CA15 cast	0.275	0.11	2750
410 wrought	0.28	0.11	2700–2790
446 wrought	0.273	0.144	2550–2750
CC50 cast	0.272	0.12	2725
Aluminum 1100	0.098	0.23 (212)	1190–1215
Aluminum 6061	0.098	0.23 (212)	1080–1200
Aluminum 4043	0.097	0.23 (212)	1065–1170
Aluminum 356	0.097	0.23 (212)	1035–1135
Copper (DHP)	0.323	0.092	1981
Red brass (wrought)	0.316	0.09	1810–1880
Yellow brass (wrought)	0.306	0.09	1660–1710
Admiralty brass (wrought)	0.308	0.09	1650–1720
Manganese bronze (wrought)	0.302	0.09	1590–1630
Cupronickel (70–30) (wrought)	0.323	0.09	2140–2260
Aluminum bronze (3) (wrought)	0.281	0.09	1910–1940
Beryllium copper (wrought)	0.297	0.10 (86–212)	1587–1750
Chemical lead	0.4097	0.0309	618

TABLE A3.3 Some Physical Properties of Piping Materials (*Continued*)

Material	Density, lb/in^3*	Specific heat, mean (temperature, °F)	Melting temperature,** °F
50/50 Sn Pb solder	0.321	0.046	361–421
Nickel (A) (wrought)	0.321	0.13	2615–2635
Monel (70 Ni–30 Cu) (wrought)	0.319	0.127	2370–2460
Inconel (wrought)	0.307	0.11	2540–2600
Incoloy (wrought)	0.290	0.12	2540–2600
Hastelloy B (wrought)	0.334	0.091	2410–2460
Hastelloy C (wrought)	0.323	0.092	2320–2380
Tin	0.26	0.0534	449.4
Titanium (99.0%)	0.163	0.125	3002–3038
Tantalum	0.600	0.034	5425

* $\text{lb/in}^3 = 2.76798 \times 10^{-2}\ \text{kg/cm}^3$

** °C = (°F − 32)/1.8.

Source: Reprinted with permission from SAE J 933 ©1989. Society of Automotive Engineers, Inc.

Other Metallurgical Properties of Metals

In addition to the properties already described, other characteristics of metals can have an important effect on the design process. These may profoundly affect the uniformity, achievable level, or stability of mechanical strength and ductility over long periods of usage.

Grain Size. Upon solidification from the molten state, metals take crystalline form. Rather than a single, large crystal, the material consists of many small crystals that initiate independently and nearly simultaneously from separate nuclei sites. These individual crystals are called *grains*, and their outer surfaces are called *grain boundaries*. Grains form initially during the solidification process, but they may also reform, grow, or rearrange while in the solid state.

Some properties of many engineering metals are very dependent on grain size (Fig. A3.15). For example, austenitic stainless steels, such as Type 304 (18% Cr-8% Ni-Fe), possess excellent creep strength when the material has a coarse grain structure, but very poor strength with fine (small) grains.

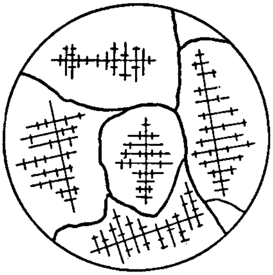

FIGURE A3.15 Sketch illustrating individual grain growth from nuclei and dendrites.

If this same austenitic material is plastically cold-worked, these grains will become distorted and possess high levels of lattice strain and residual stress. Subsequent heat treatment can cause the crystal lattice to reform unstrained grains initiating at lattice defects which act as nuclei. The process, called *recrystallization*, results in an initially very small grain size as the nucleated stress-free grains begin to grow. If heavily strained material is placed into elevated temperature service at temperatures sufficient to cause recrystallization, it will initially exhibit good creep strength until the grains begin to reform, upon which the result is very poor creep rupture strength. The material will only return to its prestrained creep-strength level if additional heat treatment is performed, resulting in further grain growth.

Grain size is a material characteristic that is sometimes directly inspected in the base material testing and certification process. The test entails retrieving a piece of the material and then metallographically polishing and etching the specimen with a weak acid solution, which reveals the grain boundaries under magnification. The test is described in ASTM Specification E 112. Grain size can be measured and reported a number of ways. The most commonly used method involves reporting grain size as an ASTM grain size number (n), corresponding to the exponent of the following equation:

$$\text{Number of grains per square inch viewed} = 2^n \text{ at 100 magnifications}$$

ASTM has correlated this grain size number, which increases as grain diameter decreases, to a series of photographs representing the grain structure at 100 magnifications. The grain size number can then be estimated by visual comparison. Examples of this comparative standard are shown in Fig. A3.16.

Fine-grained carbon- and low-alloy steels tend to possess better notch toughness and ductility than coarse-grained steel. As noted earlier, as operating temperature increases into the creep regime, engineering material strength properties are usually enhanced with coarser grains. Although this is an oversimplified (and perhaps overstated) rule of thumb, it is important for the engineer to take grain size into account for critical structures.

Hardenability. This is a property of certain steels that allows them to be strengthened, or hardened, by *heat treating*. In carbon and alloy steels, for example, this hardening is accomplished by heating the material to a temperature above about 1550°F (843°C), where the material completely changes its crystal structure from BCC to FCC. When this is followed by rapid cooling or quenching, usually in water or oil, the result is a crystal structure akin to the original BCC, but distorted along one of the unit cell directions. In the case of steels the result is a martensitic structure possessing a lattice, termed a *body-centered tetragonal* (BCT), with a larger volume per unit cell than the starting BCC.

The maximum hardness achieved in a quenched structure is primarily a function of the steel's carbon content: the higher the carbon content, the greater the hardness. The depth into the material to which a high hardness is achieved for a given quenching operation is a function of the total alloy content within the steel. The substitutional alloying element nickel has perhaps the strongest effect on increasing the depth to which hardness extends.[3] Other elements creating similar if less potent effects are manganese and boron, substitutional and interstitial alloying elements, respectively.

Standard specimens and procedures have been adopted for testing the hardenability of steels. The test rates a combination of the highest hardness achievable and the depth to which significant elevation of hardness occurs. It is called the *Jominy End-Quench test* and is performed using a 1-in-diameter cylindrical specimen machined from the metal in question and heated to a temperature in its austenitic phase (FCC) region. The heated specimen is removed from the heating oven and quickly set in a water-quenching fixture, operating under prescribed conditions of water temperature and flow rate, quenching only the cylinder end face. Upon cooling, the cylinder is parted longitudinally (axially) down the center, and a series of Rockwell hardness readings are taken from the quenched edge. A hardness scan

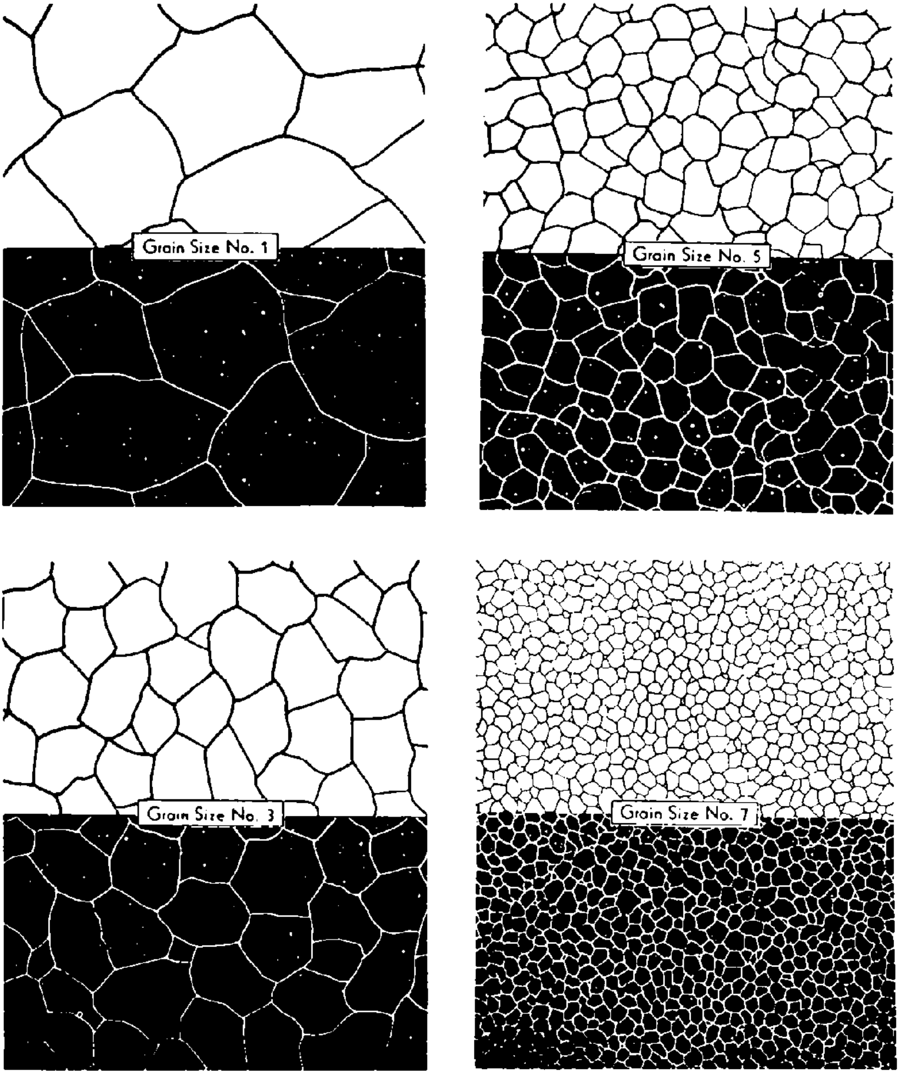

FIGURE A3.16 ASTM grain size charts for classification of steels. 100 magnifications. (*Reproduced by permission of ASTM.*)

for several alloy steels is shown in Fig. A3.17. The Jominy test procedure is defined in ASTM A 255.

Many other metal alloys harden or strengthen with special aging or tempering heat treatments. However, this trait is normally not referred to as hardenability. These will be discussed in more detail later in the chapter.

Property Stability. The mechanical properties of materials may degrade with service time. In particular, alloys that depend on heat treatment or cold working

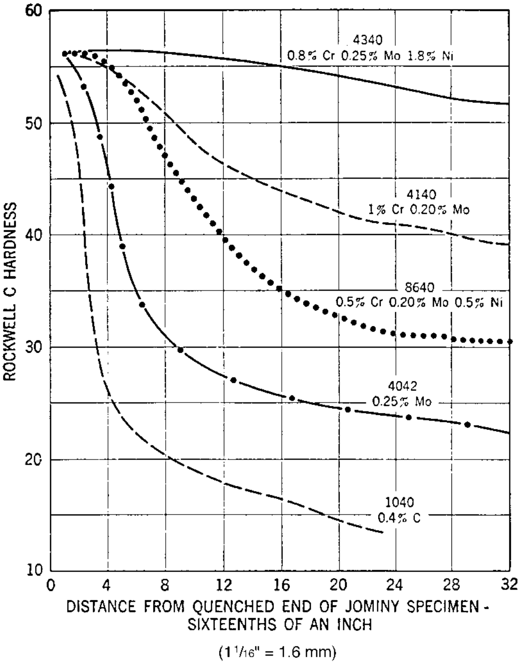

FIGURE A3.17 Jominy end-quench hardenability curves for various 0.40 percent carbon steels. (*Molybdenum Steels Iron Alloys*, Archer et al., Climax Molybdenum Company.)

to develop their strength may weaken if operated for long times at elevated temperatures. The actual exposure to service temperatures acts as a continuation of the heat-treating process, albeit at a significantly reduced rate of effect. In many engineering metals, this effect is actually a property degradation due to overtempering of the material.

A number of thermodynamic relationships exist that relate material strength and time and temperature of exposure for carbon and alloy steels. The most famous and widely used of these is the *Hollomon-Jaffe Parameter* (HJP). It is defined as the following:

$$\text{HJP} = (T + 273)(C + \log t) \times 10^{-3} \qquad \text{(A3.3)}$$

where T is temperature in degrees Celsius, t is time in hours, and C is a constant, usually around 20 for carbon steels.[4] Using this equation and solving for HJP for a given set of time and temperature conditions, the engineer can determine the time at a different temperature of interest that can result in an equivalent metallurgical effect.

A limitation exists on the range of temperatures over which the predictive capability of the Holloman-Jaffe equation can be considered reliable. Phenominologically, the same metallurgical processes must be in effect over the range of temperatures under consideration. For example, if a phase change occurs, or if other important microstructural constituents, such as carbides, are not stable at the two temperatures being compared, the correlation is not valid.

Design codes using allowable design stresses based on creep properties of the metals, by the nature of the long-term rupture tests involved, take these degrading tendencies into account. However, it is not always appreciated that the time-dependent properties, such as ultimate tensile strength and yield strength, can be decreased significantly below the starting property level by the same long-term service. This fact would be important to an engineer concerned with designing a high-temperature structure that must tolerate shock loads, such as seismic effects, that can occur near the end-of-life of the component.

More on degradation of properties and the mechanisms involved is discussed later in this chapter.

METALLIC MATERIALS

Metals are divided into two types: ferrous, which includes iron and iron-base alloys; and nonferrous, covering other metals and alloys. Metallurgy deals with the extraction of metals from ores and also with the combining, treating, and processing of metals into useful engineering materials. This section presents the fundamental metallurgical concepts and practices associated with the most common engineering metals, and outlines metallurgical considerations appropriate in the selection process of metals for piping system construction.

Ferrous Metals

Metallic iron, one of the most common of metals, is very rarely found in nature in its pure form. It occurs in the form of mineral oxides (Fe_2O_3 or Fe_3O_4), and as such it comprises about 6 percent of the earth's crust. The first step in the production of iron and steel is the reduction of the ore with coke and limestone in the blast furnace. In this process, the oxygen is removed from the ore, leaving a mixture of iron and carbon and small amounts of other elements as impurities. Coke is the reducing element and source of heat. The limestone ($CaCO_3$) acts as a fluxing agent which combines with impurities of the ore in the molten state and floats them to the top of the molten metal pool, where they can be removed as slag. The product removed from the blast furnace is called *pig iron* and is an impure form of iron containing about 4 percent carbon by weight percent. Liquid pig iron cast from the blast furnace is sometimes used directly for metal castings. More often, however, the iron is remelted in a cupola, or furnace, to further refine it and adjust its composition.[5]

Cast Iron

Pig iron that has been remelted is known as *cast iron*, a term applicable to iron possessing carbon in excess of 2 weight percent. Compared with steel, cast iron is inferior in malleability, strength, toughness, and ductility. On the other hand, cast iron has better fluidity in the molten state and can be cast satisfactorily into complicated shapes. It is also less costly than steel. The most important types of cast iron are white and gray cast irons.

White cast iron is so known because of the silvery appearance of its fracture surface when broken. In this alloy, the carbon is present in the form of iron carbide (Fe_3C), also known as *cementite*. This carbide is chiefly responsible for the high hardness, brittleness, and poor machineability characteristic of white cast iron. Chilled iron, a form of white cast iron, is cast against metal chills that cause rapid cooling, promoting the formation of cementite. Consequently, a structure is obtained which possesses high wear- and abrasion-resistance, the principal attribute of the material, but retains white cast iron's characteristic brittleness.

Malleable cast iron is the name given to white cast iron that has been heat-treated to change its cementite into nodules of graphite. The iron becomes more malleable because, in this condition, the carbon as carbide no longer exists continuously through the metal matrix.

Gray iron is a widely used type of cast iron. In this alloy, the carbon predominantly exists in the form of graphite flakes. The typical appearance of a fracture of this iron is gray since the graphite flakes are exposed. The strength of gray iron depends on the size of the graphite particles and the amount of cementite formed together with the graphite. The strength of the iron increases as the graphite crystal size decreases and the amount of cementite increases. This material is easily machined. A wide range of tensile strengths can be achieved by alloying gray iron with elements, such as nickel, chromium, and molybdenum.

Another member of the cast-iron family is so-called *ductile* iron. It is a high-carbon magnesium-treated product containing graphite in the form of spheroids. Ductile iron is similar to gray cast iron in machineability, but it possesses superior mechanical properties. This alloy is especially suited for pressure castings. By special procedures (casting against the chill) it is possible to obtain a carbide-containing, abrasion-resistant surface with an interior possessing good ductility.[5]

Steel

Steel is defined as an alloy of iron with not more than 2.0 weight percent carbon. The most common method of producing steel is to refine pig iron by oxidation of impurities and excess carbon, which have a greater affinity for oxygen than iron.

The principal reduction methods used are the basic oxygen process (BOP) and the electric furnace process, each representing a type of furnace in which the refining takes place. The BOP primarily uses molten pig iron as the initial furnace charge; the electric furnace can use a charge of selected steel scrap. Another process, called the basic open-hearth process, is no longer in use in the United States. Although it constituted the major steel producing process for decades, it has succumbed to the more advanced and economical BOP and electric furnaces.[6]

The pig iron is reduced to the desired steel composition through use of acid and/or basic reactions with fluxing agents, heat, oxygen, and time. Excess carbon is oxidized and lost as gas; impurities float to the surface. Often desired alloying elements are added to the molten pool. The steel can be further refined by using one of various methods of vacuum degassing. As the name suggests, the molten steel is passed through a vacuum chamber with the purpose of removing entrained gases such as oxygen, hydrogen, and carbon dioxide. This operation is performed when extra steel purity is desired, and it results in improved and more uniform properties in the final product form.

The molten steel is then cast into molded ingots, which are then further reduced by hot working in rolling and drawing operations. Alternately, the molten steel may be directly cast into continuous smaller billet or hollow products. The latter process is called *continuous casting* and has become the preferred method of making steel since it avoids the costly ingot reduction operations.

Alloying additions are made, if required, to the molten steel either while in the reducing furnace as already noted, in the ladle into which the steel is put, or in the ingot into which steel is poured from the ladle.

While the steel is molten in the furnace, oxygen is forcibly injected into it to refine the charge. The oxygen combines with excess carbon and is released as a gas. Excess oxygen is, however, unavoidably left in the molten steel. This results in the formation of oxide inclusions in the steel, or porosity, which appear upon solidification. The process of removing the oxygen is known as *deoxidizing practice*. Deoxidation is achieved by adding silicon, aluminum, or other deoxidizing agents to the molten steel, the amount of which determines the degree of deoxidation and the type of steel seated. The common names given to these various steel types are *killed steel*, *semikilled steel*, and *rimmed steel*.

Steel of the killed type is deoxidized almost completely; that is, sufficient deoxidizing agent is added to the molten pool to combine with all the excess entrained oxygen. The result is a large number of tiny oxides in the melt. The lack of gas in the molten pool gives the effect of ‘‘killing’’ any visible bubbling activity of the steel, thus the name. Killed steel has a more uniform composition than any of the other types, and usually possesses the best formability at room temperature. A fine-grained structure results from this practice because the many oxides formed act as initiation sites of new grains upon solidification and subsequent recrystallization. This fine-grained character offers toughness superior to the other types of steel.

Rimmed steel employs no purposeful addition of deoxidizing agents, and is characterized by relatively violent bubbling and stirring action in the ingot mold. This type exhibits a marked variation in composition across and from top to bottom of the ingot. The outer rim or outer edge of the solidified ingot is relatively pure and ductile material. The amounts of carbon, phosphorous, sulfur, and nonmetallic inclusions in this rim are lower than the average composition of the whole ingot. The amount of these constituents in the inner portion or core is higher than the ingot average. This type of steel costs less to make than the other types and is widely used for structural applications, where good surface appearance of the final product is desired.

Semikilled steel is only partially deoxidized with silicon, aluminum, or both, taking advantage of the positive attributes of killed and rimmed steel.

After casting, or *teaming* into the ingot molds, the steel is normally further reduced in size and modified in shape by mechanical working. The majority of the reduction process is done hot. During hot working, sufficient heat is maintained to ameliorate the working effects and maintain a structure that is relatively soft and ductile throughout the reduction process.

The steel in the form of ingot, slab, bar, or billet is first brought to the proper temperature throughout and is then passed through rolls or dies. The flow of metal is continuous and preferentially in one (longitudinal) direction. The cross-sectional area is reduced, and the metal is shaped the desired form. The internal structure of the steel is also favorably affected. The working reduces the grain size of the material, and tends to homogenize the overall structure, compared with cast or unworked steel.

Processes used to manufacture pipe and tube are addressed in another chapter.

PHYSICAL METALLURGY OF STEEL

Like all other metals, iron and steel are crystalline in structure, composed of atoms in a fixed lattice. As noted earlier, iron may exist in one of two cubic forms, body-centered (BCC) or face-centered (FCC).

At room temperature, pure iron is composed of a body-centered cubic lattice. In this form it is known as *alpha* iron, also called *ferrite*, which is soft, ductile, and magnetic. When heated above about 1415°F (768°C), alpha iron loses its magnetism but retains its body-centered crystalline structure. This temperature is called the *Fermi temperature*. The crystal structure changes to face-centered cubic at about 1670°F (910°C), at which temperature alpha iron is transformed to *gamma* iron, the FCC form, and remains nonmagnetic. As temperature rises further, another phase change occurs at 2570°F (1410°C), when *delta* iron is formed. This phase is again body-centered like that of the low-temperature alpha iron. It is stable to the melting temperature. In cooling very slowly from the liquid state, the phases reappear in reverse order.

The solid-state transformations of atomic structure, which occur in pure iron during heating to and cooling from the melting point, are called *allotropic* changes. The temperatures at which these changes take place are known as *transformation* or *critical* temperatures.

When carbon is added to iron and steel is produced, the same changes in phase occur, but a more complex relationship with temperature occurs. The effects of varying amounts of carbon content in iron on phase stability as temperature varies is represented in Fig. A3.18. This diagram is called an *equilibrium phase diagram*, and in this case is the very familiar iron-carbon (Fe-C) phase diagram. With this diagram, one can determine which stable phase the steel will assume at a given composition and temperature. Likewise, the effect of increasing or decreasing the amount of carbon content in iron on these critical temperatures can be predicted.

Phase diagrams are plotted in weight or atomic percent (horizontal axis) versus temperature (vertical axis). A single-phase region usually represents an area of high concentration of a single element, or an intermetallic single phase stable over a range of composition and temperature. Between these single-phase regions are regions where multiple phases coexist, in relative amounts at any given temperature approximated by the proximity of the specific composition to the single-phase regions. On the Fe-C diagram, single-phase regions are represented by those marked as alpha, gamma, and delta, and Fe_3C or cementite, which is a stable intermetallic phase.

The critical transformation temperatures in steel are the A_1, corresponding to about 1335°F (724°C), and A_3 referred to as the lower and upper critical temperatures of steel. The A_3 constitutes the boundary with the gamma phase, and its temperature varies with carbon content. The lower critical temperature, on the other hand, stays constant over the entire range of steel compositions.

These critical temperatures, as well as the entire phase diagram, represent transformations that occur under controlled, very slow cooling and heating (i.e., equilibrium) conditions. More rapid heating and cooling rates, like those encountered in normal steel processing, change these critical temperatures upward and downward, respectively. Additions of other alloying elements also will shift the critical transformation points.

It is the effective use by the metallurgist of the knowledge contained on this and similar phase diagrams that allows for the manipulation of properties of engineering materials by varying their chemistry and heat treatment. For steel, the principal phases and their properties are briefly summarized in the following list:

Austenite: A single-phase solid solution of carbon in gamma iron (FCC). It exists in ordinary steels only at elevated temperatures, but it is also found at room temperatures, but it is also found at room temperature in certain stainless steels

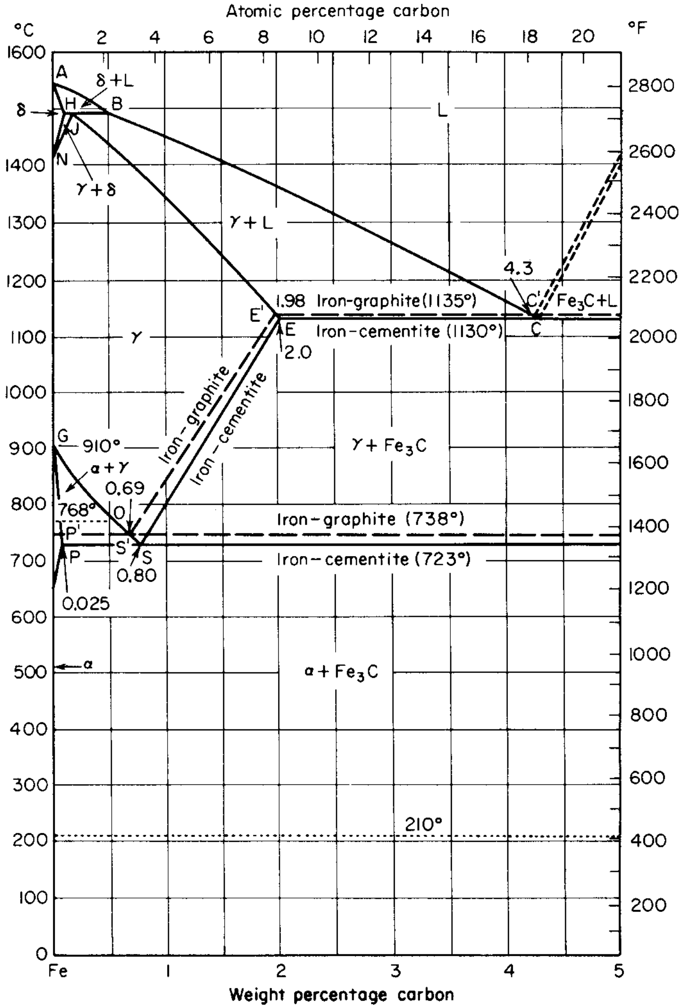

FIGURE A3.18 Iron-carbon equilibrium diagram.

(e.g., 18 Cr–8 Ni type) classified as *austenitic* stainless steels. This structure has high ductility and toughness.

Ferrite: Alpha iron (BCC), containing a small amount of carbon (0.04–0.05 percent) in solid solution. This phase is soft, ductile, and relatively weak.

Cementite: Iron carbide, Fe_3C, a compound containing 6.67 percent carbon, which is very hard and extremely brittle. Cementite appears as part of most steel structures, the form of which depends on the specifics of the heat treatment which the steel has received (see pearlite).

Pearlite: A mixture of alternating plates of iron carbide (cementite) and ferrite (lamellar structure), which form on slow cooling from within the gamma range.

This condition generally represents a good blend of strength, ductility, and fair machineability. It is the equilibrium structure in steel.

Bainite: A mixture of ferrite and cementite, which is harder and stronger than pearlite. It forms by the transformation of austenite in many steels during fairly rapid cooling, but not fast enought to cause martensite formation. The structure consists of ferrite and iron carbide, but unlike pearlite, the aggregate is nonlamellar.

Martensite: The hardest constituent achievable by heat-treating of steels, it is formed by the rapid cooling of austenite to a temperature below the *martensite start* or M_s temperature. Martensite consists of a distorted cubic unit cell (body-

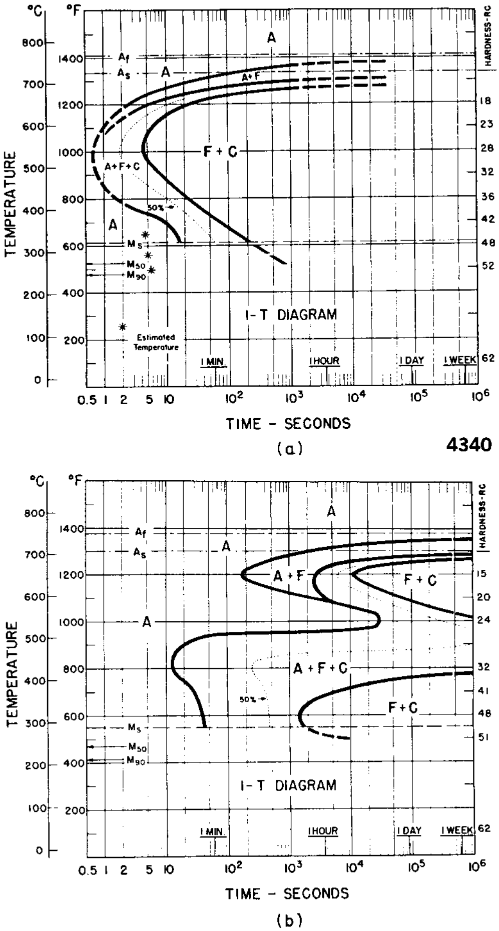

FIGURE A3.19 Isotherm transformation diagrams for AISI 1050 (*a*) and AISI 4340 (*b*). (From I-T Diagrams, *United States Steel*, ©1963.)

centered tetragonal) which contains substantial quantities of carbon in interstitial solution in the lattice. The M_s temperature varies with steel composition.

These latter two microstructural constituents, bainite and martensite, will not be found on the Fe-C phase diagram because they are the direct result of cooling steel at an accelerated rate, which prevents atomic diffusion required to maintain equilibrium conditions.

The effects of nonequilibrium cooling of a steel are represented on an *isothermal transformation* diagram, or a *time-temperature transformation* (T-T-T) diagram. An example of each is shown in Fig. A3.19. The horizontal axis of the diagram is time, usually log scale; the vertical axis is temperature. A single diagram represents a given steel alloy composition and depicts the various equilibrium and nonequilibrium phases that will be formed, and their mix, with a given cooling rate from a starting temperature in the austenitic phase region. The diagram is used by entering it at the alloys temperature at time = 0, represented as a point of the vertical axis. The cooling rate describes the time/temperature path taken by the material from the starting point, through the field of transformation phases, to the final point of sample cooling. The metallurgical phases or constituents in the final state can thus be predicted. The continuous path followed between the two points also has a bearing on final microstructure. The T-T-T diagram is similar to the equilibrium phase diagram in that single and multiple phase fields are depicted. However, it differs from the equilibrium diagram in that it is a dynamic representation of phase formation with time. Thus quickly cooling to a given temperature above the M_s will result, for example, in coexistence of austenite, ferrite and, cementite (A, F, and C on the figure). However, as time progresses at that temperature, the austenite continues to decompose into more ferrite and cementite, until complete transformation is achieved. Cooling to below the M_s temperature causes tranformation to martensite. If the path of cooling had intersected the ‘‘nose’’ of the T-T-T curve, some ferrite will form and be combined with the martensite in the final microstructure, since martensite can only be formed by quenching austenite. The ferrite that formed on cooling is stable and unaffected by further cooling.

ALLOYING OF STEEL

The alloying of carbon steel with other elements to obtain a wide range of desired properties is a mature science. The following summarizes the known effects of adding certain elements to steel[7]:

Carbon: In general, increasing the carbon content of steel alloys produces higher ultimate strength and hardness but may lower ductility and toughness. Carbon also increases air-hardening tendencies and weld hardness. In low-alloy steel for high-temperature applications, the carbon content is usually restricted to a maximum of about 0.15 percent in order to assure optimum ductility for welding, expanding, and bending operations. An increasing carbon content lessens the thermal and electrical conductivities of steel.

Phosphorus: High phosphorus content has an undesirable effect on the properties of carbon steel, notably on shock resistance and ductility (see the section on temper embrittlement). Phosphorus is effective, however, in improving machineability. In steels, it is normally controlled to less than 0.04 weight percent.

Silicon: Used as a deoxidizing agent, silicon increases the tensile strength of steel without increasing brittleness when limited to less than about 2 percent. Silicon increases resistance to oxidation, increases electrical resistivity, and decreases hysteresis losses. Thus it is used for electrical applications. Adding silicon may reduce creep rupture strength.

Manganese: Manganese is normally present in all commercial steels. The manganese combines with sulfur, thus improving hot-working characteristics. In alloy steels, manganese decreases the critical cooling rate to cause a hardened or martensitic structure and thus contributes to deep-hardening.

Nickel: As an alloying element in alloy steels, nickel is a ferrite strengthener and toughener and is soluble in all proportions. Nickel steels are easily hardened because nickel lowers the critical cooling rate necessary to produce hardening on quenching. In heat-treated steel, nickel increases the strength and toughness. In combination with chromium, nickel produces alloy steels possessing higher impact and fatigue resistance than can be obtained with straight carbon steels.

Chromium: As an alloying element in steel, chromium is miscible in iron as a solid solution, and forms a complex series of carbide compounds. Chromium is essentially a hardening element and is frequently used with a toughening element such as nickel to produce superior mechanical properties. At higher temperatures, chromium contributes increased strength and is ordinarily used in conjunction with molydenum. Additions of chromium significantly improve the elevated temperature oxidation resistance of steels.

Molybdenum: In steel, molybdenum can form a solid solution with the iron and, depending on the molybdenum and carbon content, can also form a carbide. A deeper hardening steel results. The molybdenum carbide is very stable and is responsible for matrix strengthening in long-term creep service.

Vanadium: This element is one of the strong carbide formers. It dissolves to some degree in ferrite, imparting strength and toughness. Vanadium steels show a much finer grain structure than steels of a similar composition without vanadium.

Boron: Boron is usually added to steel to improve hardenability; that is, to increase the depth of hardening during quenching.

Aluminum: Aluminum is widely used as a deoxidizer in molten steel and for controlling grain size. When added to steel in controlled amounts, it produces a fine grain size.

Sulfur: Present to some degree in all steel (less than 0.04 weight percent), sulfur forms a nonmetallic inpurity that, in large amounts, results in cracking during forming at high temperatures (hot shortness). Combining it with managanese forms a MnS compound that is relatively harmless.

Copper: Copper dissolves in steel and strengthens the iron as a substitutional element. The use of copper in certain alloys increases resistance to atmospheric corrosion and increases yield strength. However, excessive amounts of copper (usually above 0.3 percent are harmful to elevated temperature performance since the lower melting point element segregates to grain boundaries and locally melts (liquates), causing intergranular separation under applied stress.

In general, when used in combination, alloying elements may complement each other and give greater overall benefits than when used singly in much larger quantities.

CLASSIFICATION OF STEELS

There are literally hundreds of wrought grades of steel that range in composition with the variation of the many major and minor alloying elements. The simplest of these classes is known as plain carbon steel, with carbon varying between approximately 0.05 and 1.0 weight percent. Within this broad range fall three general groups according to carbon content; they are defined as follows:

1. Low carbon steels—0.05 to 0.25 percent carbon
2. Medium carbon steels—0.25 to 0.50 percent carbon
3. High carbon steels—0.50 percent and greater carbon content

Alloy steels are generally considered to be steels to which one or more alloying elements, other than carbon, have been added to give them special properties that are different than those of straight carbon steels. From the standpoint of composition, steel is considered to be an alloy steel when amounts of manganese, silicon, or copper exceed the maximum limits for the carbon steels, or when purposeful addition of minimum quantities of other alloying elements are added. These could be chromium, molybdenum, nickel, copper, cobalt, niobium, vanadium, or others.

The next higher class of alloyed steel useful to the piping industry is ferritic and martensitic stainless steels. These are steels alloyed with chromium contents above about 12 percent. Because of the chromium, these materials possess good corrosion resistance. They retain a ferritic (BCC) crystal structure, allowing the grades to be hardened by heat treatment.

When sufficient nickel is added to iron-chromium alloys, an austenitic (FCC) structure is retained at room temperature. Austenitic stainless steels possess an excellent combination of strength, ductility, and corrosion resistance. These steels cannot be hardened by quenching, since the austenite does not transform to martensite.

A stronger type of stainless steel has been developed which takes advantage of precipitation reactions within the metal matrix made possible by addition of elements such as aluminum, titanium, copper, and nitrogen. These materials are referred to as precipitation—hardenable stainless steels. Both martensitic and austenitic stainless steels can be enhanced in this manner.

As annealed, these materials are soft and readily formed. When fully hardened, through aging heat treatments, they attain their full strength potential.

STEEL HEAT-TREATING PRACTICES

Various heat treatments can be used to manipulate specific properties of steel, such as hardness and ductility, to improve machinability, to remove internal stresses, or to obtain high strength levels and impact properties. The heat treatments of steel commonly employed—annealing, normalizing, spheroidizing, hardening (quenching), and tempering—are briefly described in the following paragraphs.[8]

Annealing

Several types of annealing processes are used on carbon and low-alloy steel. These are generally referred to as *full annealing, process annealing*, and *spheroidizing annealing*.

In full annealing, the steel is heated to just above the upper critical (A_3) temperature, held for a sufficient length of time to fully austenitize the material structure, and then allowed to cool at a slow, controlled rate in the furnace. The microstructure of fully annealed low-carbon steel consists of ferrite and pearlite. A full anneal provides a relatively soft, ductile material, free of internal stresses.

Process annealing sometimes referred to as *stress-relieving*, is carried out at temperatures below the lower critical (A_1) temperature. This treatment is used to improve the ductility and decrease residual stresses in work-hardened steel.

The usual purpose of spheroidizing is to soften the steel and improve its machinability. Heating steel that possesses a pearlite microstructure for a long time at just below the lower critical temperature, followed by very slow cooling, will cause spheroidization. This is an agglomeration of the iron carbide, which eventually assumes a spheroidal shape. The properties of this product normally represent the softest condition that can be achieved in the grade of steel being heat-treated.

The austenitic stainless steels are annealed differently from carbon steels. First, since they posses a fully austenitic structure, the temperature used is not related to a critical transformation temperature. Rather, the intent of the annealing is to remove residual strain in the lattice, recrystallize the metal grains, and to dissolve any iron and chromium carbides that may exist in the matrix material. The temperature selected is usually at or above 1900°F (1038°C). Second, the cooling rate from the annealing temperature is normally as rapid as possible. This suppresses the reformation of carbides at the austenitic grain boundaries during cooling. Formation of grain boundary carbides results in local depletion of chromium in the matrix in the vicinity of the carbides, rendering this thin band of material susceptable to attack in a number of corrosive media. This susceptible condition is referred to as sensitization, and the resultant corrosion is termed intergranular attack.

The temperature range in which carbides are most apt to form in austenitic stainless steels is between about 850 and 1500°F (454 and 816°C). Slow cooling through or holding in this zone will sensitize the steel. The degree of sensitization that will occur can be greatly reduced by adding small amounts of elements that possess a stronger tendency to form carbides than the chromium. Two such elements, niobium and titanium, are added to form the so-called stabilized austenitic stainless steels. Alternately, the carbon content can be held as low as possible, thereby resulting in as few carbides as possible. These are termed the *L grade* stainless steels.

Ferritic and martensitic stainless steels will also be adversely affected by slow cooling from annealing temperatures. When slow cooled, or held in the temperature range of 750 to 950°F (400 to 510°C), these materials embrittle (see discussion on ‘‘474°C’’ embrittlement).

Normalizing

This carbon and low-alloy steel heat treatment is similar to the annealing process, except that the steel is allowed to cool in air from temperatures above the upper critical temperature. Normalizing relieves the internal stresses caused by previous working. While it produces sufficient softness and ductility for many purposes, it leaves the steel harder and with higher tensile strength than after annealing. Normalizing is often followed by tempering.

Hardening (Quenching)

When steels of the higher-carbon grades are heated to produce austenite and then cooled rapidly (quenched), the austenite transforms into martensite. Martensite is formed at temperatures usually below about 400°F (204°C), depending on the carbon content and the type and amount of alloying steel. It is the hardest form of heat-treated steel and has high strength and resistance to abrasion. Martensitic steels have poor impact strength and are difficult to machine.

Tempering

Tempering is a secondary heat treatment performed on some normalized and almost all hardened steel structures. The object of tempering is to remove some of the brittleness by allowing certain solid-state transformations to occur. It involves heating to a predetermined level, always below the lower critical temperature, followed by a controlled rate of cooling. In most cases tempering reduces the hardness of the steel, increases its toughness, and eliminates residual stresses. The higher the tempering temperature used for a given time, the more pronounced is the property change. Some steels may become embrittled on slowly cooling from certain tempering temperatures. Steels so affected are said to be *temper-brittle*. To overcome this difficulty, steels of that type are cooled rapidly from the tempering temperature. Temper embrittlement is covered elsewhere in this chapter.

DEGRADATION OF MATERIALS IN SERVICE

A number of metallurgically based processes can occur in steels which contribute to loss of engineering strength, and even premature failure. Several of these are addressed in the following paragraphs.

Aging of Properties

A number of steels that have accumulated considerable service time are known to have experienced changes in their properties, usually to their detriment. This phenomenon has been called *aging*, and occurs in materials that are heat-treated or cold-worked to achieve high strength levels and to be used at elevated temperatures. These materials are potentially more susceptible to failure after the condition has developed.

''Aging'' in this case should not be confused with the same term used to represent the purposeful heat treatment performed to some types of nonferrous alloys. In the context being addressed here, aging refers to that normally very slowly progressing metallurgical reaction that occurs in a number of alloys while at operating temperatures for extended periods of time. Some specific types of this behavior (i.e., temper embrittlement and ''885'' embrittlement) are addressed in the paragraphs that follow.

Components that experience considerable service time contain materials that have aged with time. The materials of special interest are those that regularly experience higher operating temperatures; for example, ferritic steels above 900°F (482°C) and austenitic stainless steels at or above 1000°F (538°C). A study sponsored by the ASME Boiler and Pressure Vessel Code attempted to identify and quantify these effects. The effort was the result of concerns for near end-of-life seismic loadings in elevated-temperature nuclear boilers.

Data gathered from a number of sources have shown that the room and elevated temperature yield strengths of both ferritic and austenitic steels may degrade after long exposure times. Ultimate tensile strength is affected, but to a lesser degree. The yield strength reductions can amount to as much as 40 percent in ferritic and 20 percent in austenitic steels.

Creep tests have also been run after long-term (e.g., 10,000 h) static exposure to elevated temperatures. No substantial negative effect on creep properties were noted in these tests.

In the case of ASME Boiler and Pressure Vessel Code and ASME B31.1 Power Piping Code design and construction, the degradation of yield strength does not generally violate or invalidate the conservatism built into their design rules, as manifest by the allowable design stresses. For example, in Section 1 of the ASME Boiler Code, addressing design and construction of power boilers, the material design allowable stresses for wrought materials are established by applying the following factors to base material properties. The lowest calculated value of all the following is assumed as the design allowable stress at a given temperature:

- ¼ specified minimum tensile strength at room temperature
- ⅔ specified minimum yield strength at room temperature
- ¼ tensile strength at the temperature of interest above room temperature
- ⅔ yield strength at the temperature of interest above room temperature
- 67 percent of the average stress to cause rupture in 100,000 h
- 80 percent of the minimum stress to cause rupture in 100,000 h
- 100 percent of the stress to produce 0.01 percent strain in 1000 h

In this manner, short-term properties, stress rupture strength, and creep rate are all taken into account. Typically, at the lower end of the temperature use range, the factored tensile and yield strength controls, and at higher temperatures, the creep properties set the allowable stresses.

Since most aging occurs at the higher temperatures, tensile and yield strength degradation does not normally cause concern. However, if large shock loads can occur late in component life (as is possible under seismic conditions), these short-term, time-independent properties can be critical to the components' continued safe operation.

As an illustration of the effect reduced yield strength has on fatigue, consider that with a lower yield strength, more plastic strain will result from a given high thermal, or mechanically induced stress. Since these stresses are usually due to operational transients, stress reversals can occur during continued operation (i.e., temperature stabilization at steady state, or ultimately, component shutdown). The greater the plastic strain cycle, the greater the damage, and the sooner the failure.

It is clear that as components experience increasing service time, they become less resilient to significant operational transients. That is, materials are less likely to withstand these transients than earlier in their life, not only because more cycles have continued to accumulate (toward an end-of-life limit), but also because material strength properties are degrading with time.

Temper Embrittlement

Temper embrittlement is a phenomenon that occurs in carbon and alloy steels when aged in the temperature range roughly between 660 and 1020°F (350 and 550°C). The property most significantly affected is toughness. The time in which this occurs is a function of the steel's chemical composition, heat treatment condition, fabrication history, and service temperature. The most severe degradation occurs in weld regions. Due to the extensive use of Cr–Mo steels in the petrochemical and power boiler industries, most of the studies have concentrated on this family of materials.

It has been recognized for some years that a steel's susceptibility to temper embrittlement is due to the existence and amount of the trace elements antimony (Sb), phosphorous (P), tin (Sn), and arsenic (As), with P and Sn having the greatest effect. Other elements that may contribute to reduced toughness are silicon, manganese, and copper. Beneficial effects can be gained by additions of molybdenum and aluminum. The obvious dependency of temper embrittlement severity and chemistry has led to the development of a number of embrittlement *factors*.[9]

Bruscato made the first attempt to combine the effects of various elements into a single factor, known as the *embrittlement factor X*, which is expressed as follows:

$$X = \frac{1}{100}(10\mathrm{P} + 5\mathrm{Sb} + 4\mathrm{Sn} + \mathrm{As}) \tag{A3.4}$$

The concentration of elements is in parts per million (ppm).

Miyano and Adachi arrived at a J-factor defined as:

$$J = (\%\mathrm{Si}) + (\%\mathrm{Mn}) \times (\%\mathrm{P}) + (\%\mathrm{Sn}) \times 10^4 \tag{A3.5}$$

Finally, Katsumata et al, asserted that the following embrittlement factor (E.F.) was appropriate for 2¼ Cr–1Mo and 3 Cr–1Mo steels.

$$\mathrm{E.F.} = (\%\mathrm{Si}) + (\%\mathrm{Mn}) + (\%\mathrm{Cu}) + (\%\mathrm{Ni}) \cdot Y$$

$$Y = \frac{1}{100}(10\mathrm{P} + 5\mathrm{Sn} + \mathrm{Sb} + \mathrm{As}) \qquad \text{(in ppm)}$$

$$Y = \frac{1}{100}(10\mathrm{P} + 5\mathrm{Sn} + \mathrm{Sb} + \mathrm{As}) \qquad \text{(in ppm)}$$

All of these are useful in assessing the relative susceptibility of various steel compositions to temper embrittlement. In all cases, the larger the factor, the more susceptible the particular heat of steel is to embrittlement.

The type of heat treatment applied to the materials may also affect a material's susceptibility to temper embrittle. For example, a number of experimenters have confirmed that 2¼ Cr–1 Mo alloy steels' susceptibility increases as austenitizing temperature used during its heat treatment increases. Inversely, susceptibility is lowest after an intercritical hold, at a temperature between the lower and upper critical temperature (Ac_1 and Ac_3, respectively). This effect is believed to be associated with the grain size achieved during the hold time, a larger grain being more detrimental. Although intercritically treated materials are less susceptible to temper embrittlement, they are weaker in the as-heat-treated condition.

In a parallel fashion, the degree of embrittlement, as measured by loss of toughness or shift of nil ductility temperature, is decreased if the material is more substantially tempered prior to the embrittling treatment. In this context, ''tempered'' represents the planned heat treatment that typically follows a normalizing or austenitizing and rapid quenching operation. A longer or higher temperature temper results in a softer, less strong, and more ductile condition, usually accompanied by good fracture toughness.

Luckily, the temper embrittled condition is reversible. Heat treatment for short periods of time at temperatures well above the upper critical will result in reestablishing nearly virgin properties in these materials.

Hydrogen Attack

Hydrogen attack is one of the most important problems with materials used in ammonia synthesis, oil refining, and coal gasification equipment.[9]

The first major failure of an ammonia convertor attributable to hydrogen damage was in 1933. Since then more failures and untold damage to materials have accumulated, with the majority of damage occurring in the welds or weld heat-affected zones of these components.

When carbon and low-alloy steels are held in hydrogen at high temperature and pressure for an extended period of time, these materials can suffer degrading effects to their tensile and creep rupture properties. This is accompanied by the formation of intergranular fissures, blisters on the surface, and loss of carbon content (decarburization). The phenomenon is called *hydrogen attack* and is generally attributed to the formation of methane (CH_4) within the steel.

The microstructural damage occurs when methane bubbles form and grow around precipitates at the grain boundaries within the material. The continued growth of the bubbles causes grains to separate along their boundaries and the bubbles, or voids, to coalesce. The rate of growth of the bubbles is a function of the ease by which the steel carbides give up carbon atoms to the intruding hydrogen atoms to form the methane. The more stable the carbide, the slower this reaction will take place. Thus, it has been long recognized that additions of chromium and molybdenum, both strong carbide stablizers, improves hydrogen-attack resistance of steels. Addition of other carbide-stabilizing elements such as titanium and tungsten has also assisted in reducing susceptibility.

Weld regions are more susceptible to hydrogen damage because they possess less stable carbides. It is also readily apparent that carbon content of the base material is an important variable in determining the susceptibility of a steel to hydrogen damage. In general, steels used in this service are kept below 0.20 weight percent carbon content. Certain other elements, such as nickel and copper, are known to also have a detrimental effect.

Nelson curves have proven indispensable in the selection of materials in hydrogen service. These curves (see Fig. A3.20. for an example) were originally based on experience gathered over several decades, and have been revised as new experience has been gained. These curves identify a ''safe'' regime in which an alloy will perform acceptably at various temperatures and hydrogen partial pressures. Where these curves have proven unconservative have been associated with weld heat-affected zones that had been inadequately postweld heat-treated (PWHT). The high residual stresses and high hardness left in the weld region contribute to accelerated damage. For this reason, most specifications for hydrogen service equipment stipulate a maximum hardness in weld regions that will assure adequacy of the PWHT. The limit is usually placed at 210 Brinell hardness, corresponding approximately to a 100,000 psi (690 Ma) ultimate tensile strength.

Austenitic stainless steels are essentially immune to hydrogen damage. The numerous sites within the FCC lattice in which the hydrogen atoms can be safely accommodated, and the inherent ductility of the lattice, gives austenitic materials this freedom from hydrogen damage. However, when stainless overlay weld metal has been used over carbon or low-alloy vessel steels, hydrogen-induced cracking can occur at the weld fusion line just inside the ferritic material.

''885°F'' (474°C) Embrittlement

One of the limitations of ferritic stainless steels (those alloys of iron possessing greater than about 14 pecent chromium) has been the loss of toughness at room

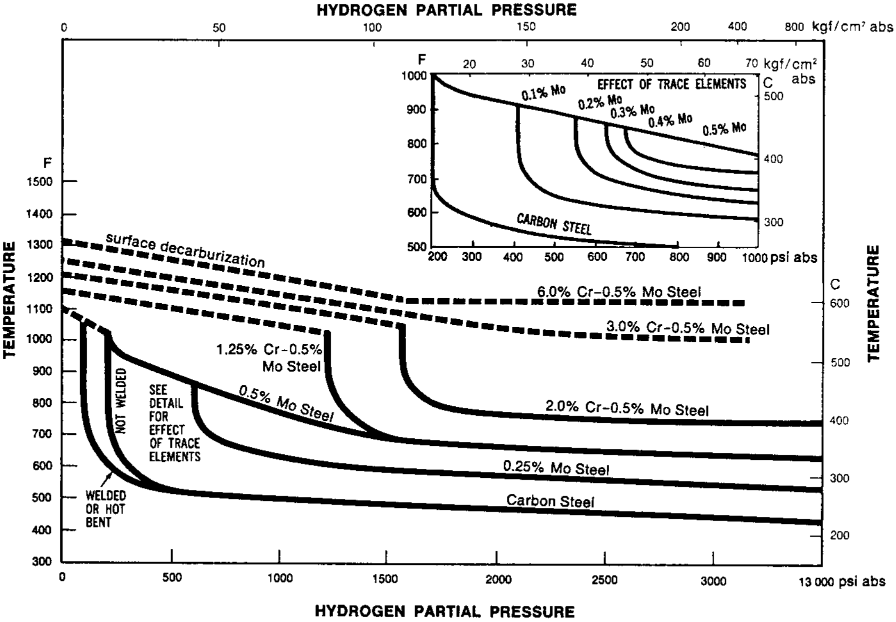

FIGURE A3.20 The classic Nelson diagram indicating the choice of steel warranted to avoid hydrogen attack as a function of operating temperature and partial pressure of hydrogen. Austenitic materials are satisfactory at all temperatures and pressure from hydrogen damage. (Dunn et al., *Molybdenum's Place in the Pressure-Vessel Field*, Climax Molybdenum Company.)

temperature that occurs after these materials are exposed for long times to temperatures in the range of 610 to 1000°F (320 to 538°C). This is commonly referred to as *885°F (474°C) embrittlement*, corresponding approximately to the temperature at which many of the alloys degrade the fastest.

The compositional effects in commercial alloys on 885°F (474°C) embrittlement have not been systematically investigated. However, it is clear that the degree of embrittlement increases as chromium content increases. The effects that other elements may have is not clear. Of these, most important is carbon, and it has been reported as having from no effect to a retarding effect on embrittlement.

This phenomenon results in increased hardness and strength, with a corresponding decrease in ductility, fracture toughness, and a decrease in corrosion resistance. Loss of toughness can be particularly severe, and in fact has tended to relegate the use of this class of alloy to temperature regimes below which significant embrittlement can occur.

Graphitization

Graphitization is a time- and temperature-dependent nucleation and growth process, in which iron carbide in the form of pearlite first spheroidizes, and later forms graphite nodules. There are two general types:

1. Formation of randomly, relatively uniformly distributed graphite nodules in the steel. This reduces the room temperature mechanical strength somewhat, but does not affect the creep-rupture strength at elevated temperature.
2. A concentrated formation of graphite most frequently along the edges of the heat-affected zone of weldments. This is referred to as chain graphite, since a plane of nodules exists paralleling the weld bead contours.

The formation of these nodules, when aligned through the wall of a pressure part, creates planes of weakness, subject to rupture. Fracture characteristically occurs without prior warning.

The first graphitization failure of a low-carbon steam piping material occurred in the early 1940s. The failure occurred after five and a half years of service in a steam line made of aluminum-killed carbon-molydenum steel. The fracture surface was located approximately 1⁄16 in (1.6 mm) from the fusion zone of a butt weld. The failure precipitated numerous and extensive research programs to understand the key variables of the mechanism and to determine the steels which would resist graphitization.

Research has helped in the understanding of the problem, and led to restrictions adopted by the various design codes on use of materials subject to graphitization. Carbon steel and carbon-molybdenum grades are the most susceptible to this degradation process, with the latter being more so. Relative susceptibility of these two grades is also dependent on the steel's aluminum content; the more aluminum, the greater the susceptibility. Additions of chromium in amounts as low as 0.5 weight percent make the steel essentially immune to graphitization.

The ASME Code permits the use of carbon and carbon-molybdenum steels in ASME Section 1 boiler applications up to 1000°F (538°C). A cautionary note is provided in the allowable stress tables of Section I indicating the carbon steels and carbon-molybdenum steels may be susceptible to graphitization at temperatures above about 800 and 875°F (427 to 468°C), respectively. ASME B31.1 has a similar precautionary note specifying limits of 775 and 850°F (413 and 454°C), respectively. Graphitization is a mechanism dependent on diffusion and is not associated with a precise temperature of initiation (it occurs sooner at higher temperatures). Thus, the differences between the design codes only reflect different levels of conservatism in dealing with the failure mode. Many manufacturers extend even more severe restrictions, some prohibiting the use of these steels in piping applications outside the boiler or pressure vessel where rupture creates a serious safety hazard. Substitution of chromium-containing steel grades, such as SA.335 P2(½Cr-½Mo), P11 (1¼Cr-½Mo), and P22 (2¼Cr-1Mo), is normally recommended for these applications. Grade P91 (9Cr-1Mo-V) is increasingly being used in high-temperature applications where use of P11 and P22 is not desirable due to their reduced mechanical strength.

Intergranular Attack

When an unstabilized austenitic stainless steel is held at a temperature within the range of 850 to 1500°F (454 to 816°C), chromium carbides will quickly and preferentially form at the austenitic grain boundaries. The formation of these carbides deletes the surrounding grain matrix of chromium atoms, rendering the thin zone adjacent to grain boundary susceptible to corrosive attack in aqueous environments. This condition is called *sensitization*, and the resulting corrosion is termed *intergranular attack* (IGA). When also in the presence of local high-tension stresses, the result can be *intergranular stress corrosion cracking* (IGSCC). Avoidance of these failure mechanisms is best achieved by minimizing sensitization (fast cool from anneal; stabilized or L-grade steels), and eliminating local stresses.

The area of piping components most often attacked is weld regions. Sensitization can readily occur in a narrow band of base material in the heat-affected zone, caused by the heat of the weld pool. Corrosion of this area has been called *knife line attack* due to the characteristic appearance of a thin crack along a weld edge.

Sigmatization

A hard, brittle, nonmagnetic phase will form in some Fe-Cr and Fe-Ni-Cr alloys upon prolonged exposure to temperatures between about 1100 and 1475°F (593 and 800°C). Those austentic stainless steels containing higher alloy content, such as type 310 (25% Cr–20% Ni) are susceptible, as well as any grades that possess residual ferrite in their microstructure, a constituent which will transform to sigma, preferentially at grain boundaries.

The most deterimental effect of sigma is reduction of toughness. Charpy V-notch impact toughness can degrade to less than 10 ft · lb (14 joules) at room temperature if as much as 10 percent of the volume of material transforms. Toughness is usually not significantly degraded at higher temperatures, above about 1000°F (538°C).

Chemically, sigma is not as resistant to oxidizing media as the austenite, such as acidic environments, thus, the materials will undergo intergranular attack.

At normal metal operating temperatures in power plants, sigmatization of pressure piping made of these high-alloy materials takes very long times to form. Once formed, the phase can be redissolved by subjecting the material to an annealing heat treatment.

Creep Damage and Estimation of Remaining Creep Life

The type of damage observed in components operating at high temperatures, and high stress, typically progresses in stages occurring over a considerable period of time. Elongation or swelling of the component may be observed. Material damage manifests itself in the microstructure in characteristic form at grain boundaries. Voids will form first, which then subsequently link up to form cracks. These cracks increase in size or severity as the end-of-life condition is approached. Severe-damage indications invariably signal the need for near-term corrective action. Such corrective action may entail repair or replacement of the component in question, depending upon the extent of the damage and the feasibility of repair. It is important to note that, except in the most severe cases, damage is not readily detectable by the naked eye, or even by conventional nondestructive techniques such as ultrasonic, magnetic particle, or liquid penetrant examination methods.

The degree of microstructural damage can be assessed by conventional metallographic procedures that may either take a destructive sampling approach or use nondestructive in-place (in-situ) methods. Since the determination of the structural damage allows for a ready estimation of expended creep-rupture life, these inspection methods have recently been adopted to piping and other structural components. The power piping industry, in particular, has seen a wholesale application of metallographic examination to components that have experienced extensive time in elevated temperature service. Several serious steam line ruptures have caused deaths, serious injury, and significant lost operating time at fossil energy power plants. The steam lines that have come under the greatest scrutiny are reheat superheater piping which, based on their relatively large diameters and thin walls, had been made from rolled and welded plate. The failures have been associated with the longitudinal weld regions, which are inherently more susceptible to problems due to danger of latent defects (lack of fusion, slag entrapment, solidification cracks), and the variability in mechanical properties across the welds heat-affected zone.

Destructive sampling of material surfaces of suspected creep-damaged components, to allow for metallographic examination, has evolved to the point where there can be minimal disturbance to surrounding material. Test samples are either trepanned through thickness or smaller silver (boat-shaped) samples are removed by sawing, electro discharge machining, or other methods. However, arc gouging or any other form of heat-producing mechanism must be avoided. It not only can significantly metallurgically alter surrounding material but also can damage the destructive sample, sometimes rendering it unusable for microscopic analysis. The small samples, once properly removed, are metallographically prepared in the standard fashion. These are then examined at high magnification in metallurgical microscopes for evidence of creep damage. The area from which this sample was removed must be weld repaired, employing the required preheat, postweld heat treatment, and weld inspections.

Alternately, an evaluation of microstructure can be performed in place on the component surface, in the area of interest using a procedure called *replication*, which provides, in a manner of speaking, a fingerprint image of the surface. The area to be examined is first carefully polished to a mirrorlike finish using ever-increasing fineness of sandpapers or grinding disks, and then polishing compounds. The surface is then etched with an appropriate acid. A thin, softened plastic film is then applied to the surface. Upon drying, the film hardens, retaining the microstructure in relief. When properly done by skilled technicians, the resolution of the metal structure at magnifications up to 500X or higher is almost equal to that achieved on an actual metal sample. The disadvantage of the replication method is that only the surface of the material can be examined, leaving any subsurface damage undetected. However, this method has proven useful when applied to weld regions, or other high-stressed areas where damage is suspected.

Remaining creep-life determination done in this fashion is not exact; the correlation between the type and degree of damage, and expended creep life is only approximate. In most cases, follow-up inspection several years hence is necessary to determine the rate of damage progression. Usually, when a network of microcracks has been generated, it is time to consider repair or replacement.

The science of estimating the expected growth rate of these cracks by creep evolved very rapidly in the 1980s. Armed with sufficient baseline creep data of a given alloy, formulas have been developed that can predict creep crack growth rates reasonably accurately. Analysis can also be made whether a pipeline would ‘‘leak before break’’; that is, weep fluid for a time prior to catastrophic rupture. All of these tools are available to the piping designer and to operating management, but will not be discussed in any greater detail in this chapter.

Oxide Thickness and Estimation of Remaining Creep Life

Another method for estimating remaining creep life of certain high-temperature tubing and piping components considers the amount of metal oxide scale that has formed on the metals surface. Understandably, this method only applies when the tubular items contain relatively benign substances under oxidizing conditions. It has found its use in steam-carrying piping and components. This method is based on the knowledge that a given thickness of oxide scale on the tube or pipe surface represents growth for a certain time at some temperature. Since oxide growth kinetics of many alloys are well characterized, the effective temperature at which the tube was operating for a known time (service life) can be estimated. The combination of effective temperature and time can then be compared to the typical creep life of the alloy at an applied stress or stresses that are known to have acted on the component during its service life.

As noted, the two principal tools needed by the metallurgist to estimate life using the oxide measurement technique are (1) steam oxidation data for the alloy in question, and (2) uniaxial creep-rupture data for that alloy across the temperature range of interest. This latter information can be found for many of the most widely

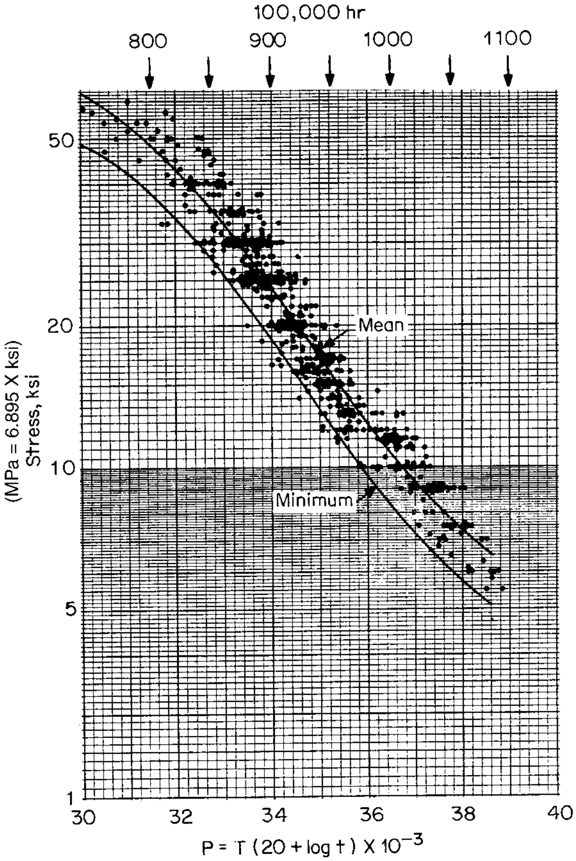

FIGURE A3.21 Variation of Larson-Miller rupture parameter with stress for wrought 1¼ Cr ½ Mo-Si steel. (*Evaluation of the Elevated Temperature Tensile and Creep-Rupture Properties of ½ Cr-½ Mo, 1 Cr-½ Mo, and 1¼ Cr-½ Mo-Si Steels,* ASTM Data Series Publication DS50.)

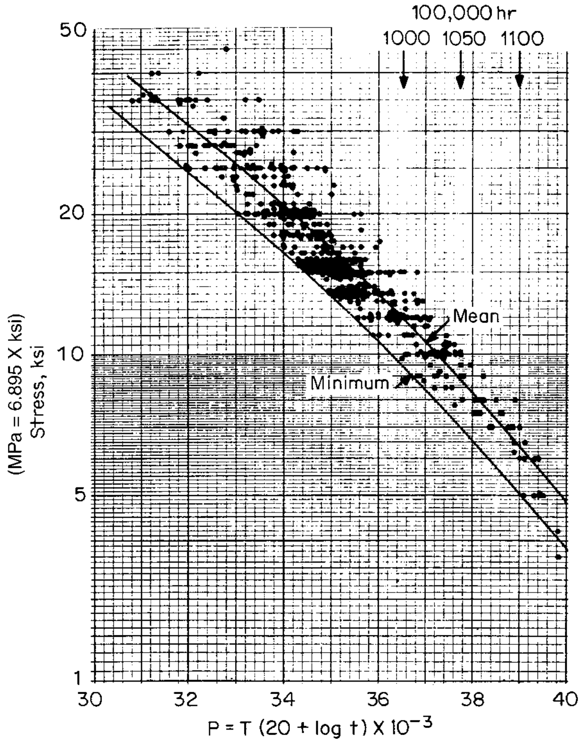

FIGURE A3.22 Variation of Larson-Miller parameter with stress for rupture of annealed 2¼ Cr-1 Mo steel. (*Supplemental Report on the Elevated-Temperature Properties of Chromium-Molybdenum Steels*, ASTM Data Series Publication DS 652.)

used ferrous alloy piping materials in ASTM references. The specific steps followed in this approach are as follows:

1. Oxide thickness is measured either metallographically on a sample or using specialized ultrasonic techniques. Operating time is known.
2. The effective operating temperature is determined from the oxidation data. The effective temperature is defined as the constant temperature that the particular tube metal would have had to have operated at for the known service time to have resulted in the measured oxide thickness. (This is an approximation, since the tube or pipe would have operated at various temperatures, perhaps even in upset conditions well above the design temperature limit.)
3. The hoop stress is calculated using an appropriate formula, knowing the tube or pipe size and operating pressure.
4. The Larsen-Miller Parameter (LMP) is calculated for the service time and effective temperature of the subject tube. The LMP is defined as:

$$\text{LMP} = T(20 + \log t) \times 10^{-3} \tag{A3.6}$$

Where T is temperature in degrees Rankine and t is time in hours. This is a simple factor representing the actual condition of the operating component.

5. Uniaxial creep-rupture data is obtained for the alloy in question. Examples of data for 1¼Cr-½Mo-Si and 2¼Cr-1Mo, taken from creep data sources ASTM DS50 and DS652 are shown as Fig. A3.21 and Fig. A3.22. This rupture data is normally represented by curves of minimum and average behavior, and lists applied stress versus LMP.
6. The ASTM rupture curve is entered on the stress axis at the level of appropriate calculated operating stress (from step 3). In this manner, the LMP representing the expected minimum and average total creep life at that stress is determined.
7. The operating LMP calculated in step 4 is compared to the LMPs derived in step 6. The differential in time represented by these parameters can be easily calculated from the Larsen-Miller formula, and the percentage of expended life versus minimum and average expected life can be determined by taking a ratio of these values.

This method for estimating remaining creep life has found its greatest use in the fossil power boiler industry, particularly for ferritic alloy steam piping and superheater tubing. Since a great majority of the operating power boilers in the United States are approaching their originally intended lifetime, the method is critical for establishing when major repair or replacement is necessary to restore the unit to safer and more reliable operation.

MATERIAL SPECIFICATIONS

The American Iron and Steel Institute (AISI) and the Society of Automotive Engineers (SAE) have devised a standardized numbering system for the various classes of carbon and alloy steels that has gained widespread acceptance in North America.

This system employs a four-digit number for carbon and low-alloy steels, and a three-digit number for stainless steels. Regarding the former, the first two digits represents the major alloying elements of the grade. The final two digits represent the nominal carbon content of each alloy, in hundreds of weight percent. For example, 10XX represents simple carbon steels, and 41XX stands for steels with chromium-molybdenum as the major alloying elements. In both classes, a specific grade possessing a nominal carbon content of 0.20 percent would be, respectively, 1020 and 4120. In this fashion the many possible alloy steels can be systematically identified.

Table A3.4 lists the carbon and alloy steel grades categories recognized by AISI and SAE.

The stainless steels are assigned a three-digit code by AISI. Those austenitic stainless steels composed of chromium, nickel, and manganese are the 2XX series. Chromium-nickel austenitic stainless steels are 3XX; ferritic and martensitic stainless steels are 4XX. In the case of stainless steels, the last two digits represent a unique overall composition rather than the level of carbon.

Due to increasing international technical community involvement and cooperation, and with each country possessing its own alloy numbering system, a worldwide universal system of material identification was needed. The Unified Numbering System (UNS) was the result. In this system a letter is followed by a five-digit

TABLE A3.4 Carbon and Alloy Steel Grade Categories: AISI, SAE, UNS

Numerals and digits		
UNS	SAE/AISI	Types of identifying elements
		Carbon steels
G10*XX*0	10*XX*	Nonresulfurized, manganese 1.00% maximum
G11*XX*0	11*XX*	Resulfurized
G12*XX*0	12*XX*	Rephosphorized and resulfurized
		Alloy steels
G13*XX*0	13*XX*	Manganese steels
G23*XX*0	23*XX*	Nickel steels
G25*XX*0	25*XX*	Nickel steels
G31*XX*0	31*XX*	Nickel-chromium steels
G32*XX*0	32*XX*	Nickel-chromium steels
G33*XX*0	33*XX*	Nickel-chromium steels
G34*XX*0	34*XX*	Nickel-chromium steels
G40*XX*0	40*XX*	Molybdenum steels
G41*XX*0	41*XX*	Chromium-molybdenum steels
G43*XX*0	43*XX*	Nickel-chromium-molybdenum steels
G44*XX*0	44*XX*	Molybdenum steels
G46*XX*0	46*XX*	Nickel-molybdenum steels
G47*XX*0	47*XX*	Nickel-chromium-molybdenum steels
G48*XX*0	48*XX*	Nickel-molybdenum steels
G50*XX*0	50*XX*	Chromium steels
G51*XX*0	51*XX*	Chromium steels
G50*XX*6	50*XXX*	Chromium steels
G51*XX*6	51*XXX*	Chromium steels
G52*XX*6	52*XXX*	Chromium steels
G61*XX*0	61*XX*	Chromium-vanadium steels
G71*XX*0	71*XXX*	Tungsten-chromium steels
G72*XX*0	72*XX*	Tungsten-chromium steels
G81*XX*0	81*XX*	Nickel-chromium-molybdenum steels
G86*XX*0	86*XX*	Nickel-chromium-molybdenum steels
G87*XX*0	87*XX*	Nickel-chromium-molybdenum steels
G88*XX*0	88*XX*	Nickel-chromium-molybdenum steels
G92*XX*0	92*XX*	Silicon-manganese steels
G93*XX*0	93*XX*	Nickel-chromium-molybdenum steels
G94*XX*0	94*XX*	Nickel-chromium-molybdenum steels
G97*XX*0	97*XX*	Nickel-chromium-molybdenum steels
G98*XX*0	98*XX*	Nickel-chromium-molybdenum steels
		Carbon and alloy steels
G*XXXX*1	*XX*B*XX*	B denotes boron steels
G*XXXX*4	*XX*L*XX*	L denotes leaded steels
		Stainless steels
S2*XXXX*	302*XX*	Chromium-nickel steels
S3*XXXX*	303*XX*	Chromium-nickel steels
S4*XXXX*	514*XX*	Chromium steels
S5*XXXX*	515*XX*	Chromium steels
		Experimental steels
None	Ex…	SAE Experimental steels

Source: Reprinted with permission from SAE J402 © 1988 Society of Automotive Engineers, Inc.

TABLE A3.5 Selected Piping System Materials—ASME Specifications

	ASME Specification		Other comments	
Metal or Alloy	Number	Grade	ksi*	MPa
	Pipe			
Carbon steel	SA-53	A	48,000 UTS/30,000YS	(330/205)
Carbon steel	SA-106	B	60,000 UTS/35,000YS	(415/240)
Carbon steel	SA-106	C	70,000 UTS/40,000YS	(485/275)
½ Cr–½ Moly	SA-335	P2	55,000 UTS/30,000YS	(380/205)
1 Cr–½ Moly	SA-335	P12	60,000 UTS/32,000YS	(415/220)
1¼ Cr–½ Mo-Si	SA-335	P11	60,000 UTS/30,000YS	(415/205)
2¼ Cr–1 Mo	SA-335	P22	60,000 UTS/30,000YS	(415/205)
5 Cr–1 Mo	SA-335	P5	60,000 UTS/30,000YS	(415/205)
9 Cr–1 Mo	SA-335	P9	60,000 UTS/30,000YS	(415/205)
9 Cr–1 Mo-V	SA-335	P9	85,000 UTS/60,000YS	(585/415)
304H	SA-376	TP304H	0.04% Min carbon	
304H	SA-430	FP304H	Forged and bored pipe	
316H	SA-376	TP316H	75,000 UTS/30,000YS	(515/205)
Forgings/fittings				
Carbon steel	SA-105	—	Rolled or forged bar	
Carbon steel	SA-181	C170	70,000 UTS/36,000YS	(485/250)
Carbon steel	SA-266	C12	70,000 UTS/30,000YS	(485/205)
Carbon-Moly	SA-182	F1	0.5% Mo	
½ Cr–½ Moly	SA-182	F2	—	
1 Cr–½ Moly	SA-182	F12	70,000 UTS/40,000YS	(485/275)
1¼ Cr–½ Mo-Si	SA-182	F11a	75,000 UTS/45,000YS	(515/310)
1¼ Cr–½ Mo-Si	SA-182	F11b	60,000 UTS/30,000YS	(415/205)
2¼ Cr–1 Mo	SA-234	WP12	Fittings	
5 Cr–1 Mo	SA-336	F5A	80,000 UTS/50,000YS	(550/345)
9 Cr–1 Mo-V	SA-234	WP9	Fittings	
304H	SA-336	F304H	1900°F Min anneal	
Tubing				
Carbon steel	SA-178	A	Electric resistance welded	
Carbon steel	SA-210	A1	60,000 UTS/37,000YS	(415/255)
Carbon-Moly	SA-209	T1a	Seamless	
½ Cr–½ Moly	SA-213	T2	60,000 UTS/30,000YS	(415/205)
2¼ Cr–1 Moly	SA-213	T22	60,000 UTS/30,000YS	(415/205)
9 Cr–1 Mo-V	SA-213	T91	Normalized and tempered	
304H	SA-213	TP304H	75,000 UTS/30,000YS	(515/205)

* UTS and YS in psi.

number which, taken together, uniquely defines each particular composition. Many of the conventions adopted in the AISI/SAE system were incorporated into the UNS numbers, as shown on Table A3.4.

The AISI and SAE specifications for alloys controls only material composition. Addition control over minimum properties, heat treatment, and other inspections was necessary to assure reproducibility and reliability of the materials for their

TABLE A3.6 Cross-Reference for ASME to UNS Selected Pipe and Tubing Specifications

ASME specification (and grade)	UNS number
SA-53 (E-A)(S-A)	K02504
SA-53 (E-B)(S-B)	K03005
SA-106 (A)	K02501
SA-106 (B)	K03006
SA-106 (C)	K03501
SA-178 (A)	K01200
SA-178 (C)	K03503
SA-209 (T1)	K11522
SA-209 (T1a)	K12023
SA-209 (T1b)	K11422
SA-210 (A1)	K02707
SA-210 (C)	K03501
SA-213 (T2)	K11547
SA-213 (T3b)	K21509
SA-213 (T5)	K41545
SA-213 (T7)	S50300
SA-213 (T9)	S50400
SA-213 (T11)	K11597
SA-213 (T12)	K11562
SA-213 (T21)	K31545
SA-213 (T22)	K21590
SA-213/SA-312 (304)	S30400
SA-213/SA-312 (304H)	S30409
SA-213/SA-312 (304L)	S30403
SA-213/SA-312 (304N)	S30451
SA-213/SA-312 (310)	S31000
SA-213/SA-312 (316)	S31600
SA-213/SA-312 (316H)	S31609
SA-213/SA-312 (316L)	S31603
SA-213/SA-312 (316N)	S31651
SA-213/SA-312 (321)	S32100
SA-213/SA-312 (321H)	S31209
SA-213/SA-312 (347)	S34700
SA-213/SA-312 (347H)	S34709
SA-213/SA-312 (348)	S34800
SA-213/SA-312 (348H)	S34809
SA-335 (P1)	K11522
SA-335 (P2)	K11547
SA-335 (P5)	K41545
SA-335 (P7)	S50300
SA-335 (P9)	S50400
SA-335 (P11)	K11597
SA-335 (P12)	K11562
SA-335 (P21)	K31545
SA-335 (P22)	K21590

TABLE A3.7 Nominal Compositions of Wrought Copper Materials

Alloy	Composition
Coppers	
Electrolytic tough pitch (ETP)	99.90 Cu–0.04 O
Phosphorized, high residual phosphorus (DHP)	99.90 Cu–0.02 P
Phosphorized, low residual phosphorus (DLP)	99.90 Cu–0.005 P
Lake	Cu–8 oz/ton Ag
Silver bearing (10–15)	Cu–10 to 15 oz/ton Ag
Silver bearing (25–30)	Cu–25 to 30 oz/ton Ag
Oxygenfree (OF) (no residual deoxidants)	99.92 Cu (min)
Free cutting	99 Cu–1 Pb
Free cutting	99.5 Cu–0.5 Te
Free cutting	99.4 Cu–0.6 Se
Chromium copper (heat treatable) (b)	Cu + Cr and Ag or Zn
Cadmium copper (b)	99 Cu–1 Cd
Tellurium nickel copper (heat treatable) (b)	98.4 Cu–1.1 Ni–0.5 Te
Beryllium copper (heat treatable)	Cu–2 Be–0.25 Co or 0.35 Ni
Plain brasses	
Gilding, 95%	95 Cu–5 Zn
Commercial bronze, 90%	90 Cu–10 Zn
Red brass, 85%	85 Cu–15 Zn
Low brass, 80%	80 Cu–20 Zn
Cartridge brass, 70%	70 Cu–30 Zn
Yellow brass, 65%	65 Cu–35 Zn
Muntz metal	60 Cu–40 Zn
Free-cutting brasses	
Leaded commercial bronze (rod)	89 Cu–9.25 Zn–1.75 Pb
Leaded brass strip (B121-3)	65 Cu–34 Zn–1 Pb
Leaded brass strip (B121-5)	65 Cu–33 Zn–2 Pb
Leaded brass tube (B135-3)	66 Cu–33.5 Zn–0.5 Pb
Leaded brass tube (B135-4)	66 Cu–32.4 Zn–1.6 Pb
Medium-leaded brass rod	64.5 Cu–34.5 Zn–1 Pb
High-leaded brass rod	62.5 Cu–35.75 Zn–1.75 Pb
Free-cutting brass rod (B16)	61.5 Cu–35.5 Zn–3 Pb
Forging brass	60 Cu–38 Zn–2 Pb
Architectural bronze	57 Cu–40 Zn–3 Pb
Miscellaneous brasses	
Admiralty (inhibited)	71 Cu–28 Zn–1 Sn
Naval brass	60 Cu–39.25 Zn–0.75 Sn
Leaded naval brass	60 Cu–37.5 Zn–1.75 Pb–0.75 Sn
Aluminum brass (inhibited)	76 Cu–22 Zn–2 Al
Manganese brass	70 Cu–28.7 Zn–1.3 Mn
Manganese bronze rod A (B138)	58.5 Cu–39 Zn–1.4 Fe–1 Sn–0.1 Mn
Manganese bronze rod B (B138)	65.5 Cu–23.3 Zn–4.5 Al–3.7 Mn–3 Fe

intended purpose. The American Society for Testing and Materials (ASTM), the American Society of Mechanical Engineers (ASME), and the American Petroleum Institute (API) have generated a series of comprehensive material specifications that extend this control. Table A3.5 lists the more common ASME specification and grade numbers for the common piping system materials of construction. Table A3.6 gives equivalencies between selected piping material grades in ASME with the Unified Numbering System (UNS).

Copper and Copper Alloys

The use of copper and copper alloys is limited to temperatures below the lower recrystallization temperature for the particular alloy. This is the temperature at which cold-worked specimens begin to soften. This recrystallization is usually accompanied by a marked reduction in tensile strength. Typical classes of wrought copper-based materials are given in Table A3.7.

Brasses containing 70 percent or more of copper may be used successfully at temperatures up to 400°F (200°C), while those containing only 60 percent of copper should not be used at temperatures above 300°F (150°C).

TABLE A3.8 Copper and Copper-Based Pipe and Tubing Alloy Specifications

ASME specification	UNS grade number	Characteristics
SB-42/SB-68	C10200	99.95 Cu
SB-42/SB-68	C12000	99.90 plus low Phos
SB-42/SB-68	C12200	99.9 plus high Phos
SB-43	C23000	Red Brass
SB-75/SB-111	C10200	Oxygen Free
SB-75/SB-111	C12000	—
SB-75/SB-111	C12200	—
SB-75/SB-111	C14200	Phosphorized, Arsenical
SB-111	C23000	Red Brass
SB-111	C28000	Muntz Metal
SB-111	C44300	Admiralty Metal
SB-111	C44400	Cu-Zn
SB-111	C44500	Cu-Zn
SB-111	C60800	Aluminum Bronze
SB-111	C68700	Aluminum Brass
SB-111	C70400	95-5 Cu-Ni
SB-111	C70600	90-10 Cu-Ni
SB-111	C71000	80-20 Cu-Ni
SB-111	C71500	70-30 Cu-Ni
SB-315	C65500	High-Si Bronze
SB-466	C70600	90-10 Cu-Ni
SB-466	C71500	70-30 Cu-Ni
SB-467	C70600	Welded 90-10
SB-467	C71500	Welded 70-30

TABLE A3.9 Nickel and Nickel-Based Pipe and Tubing Alloy Specifications

ASME specifications	UNS grade number	Characteristics
SB-161	N02200	Nickel 200; 99% Ni
SB-161	N02201	Low Carbon
SB-163/SB-407	N08800	Alloy 800 Tubing (Ni-Fe-Cr)
SB-163/SB-165	N04400	70-30 Ni-Cu Monel
SB-163/SB-167	N06600	Alloy 600 (Ni-Cr-Fe)
SB-163/SB-167	N06690	Alloy 690 (60-30-10)
SB-163/SB-423	N08825	Alloy 825

The ASME Boiler and Pressure Vessel Code limits the use of brass and copper pipe and tubing (except for heater tubes) to temperatures not to exceed 406°F (208°C). The ASME B31 Code for Pressure Piping also limits brass and copper pipe and tubing to this temperature for steam, gas, and air piping.

Table A3.8 lists a number of ASME specifications for copper and copper alloy piping and tubing.

Nickel and Nickel Alloys

Nickel is a tough, malleable metal that offers good resistance to oxidation and corrosion. When nickel is combined with copper as the secondary element, the well-known series of Monel alloys are created. Nickel, Monel, and various modifications of these materials are used in piping systems, turbine blading, valves, and miscellaneous power plant accessories handling steam.

The presence of even a small amount of sulfur in a reducing environment will result in embrittlement as temperatures of 700–1200°F (370–650°C).

TABLE A3.10 Designation System for Wrought Aluminum and Aluminum Alloy

Composition	Alloy no.
Aluminum, 99.0% min and greater	1*XXX*
Aluminum alloys grouped by major alloying element	
Copper	2*XXX*
Manganese	3*XXX*
Silicon	4*XXX*
Magnesium	5*XXX*
Magnesium and silicon	6*XXX*
Zinc	7*XXX*
Other elements	8*XXX*
Unused series	9*XXX*

Source: Reprinted with permission from SEA J933 ©1989 Society of Automotive Engineers, Inc.

TABLE A3.11 Chemical Composition Limits for Wrought Aluminum Alloys Where No Range Is Given (Single Number Indicates Maximum Permissible Percentage)

Alloy number	Si	Fe	Cu	Mn	Mg	Cr	Ni	Zn	Ti	Others	
										Each	Total
EC	(Al 99.45 min)										
1100	1.0 Si + Fe		0.20	0.05	—	—	—	0.10	—	0.05(a)	0.15
1060	0.25	0.35	0.05	0.03	0.03	—	—	0.05	0.03	0.03(a)	—
1085	0.10	0.12	0.03	0.02	0.02	—	—	0.03	0.02	0.01(b)	—
1099	(Al 99.99 min)										
2011	0.04	0.7	5.0–6..0	—	—	—	—	0.30	—	0.05(c)	0.15
2014	0.50–1.2	1.0	3.9–5.0	0.40–1.2	0.20–0.8	0.10	—	0.25	0.15	0.05(a)	0.15
2017	0.8	1.0	3.5–4.5	9.40–1.0	0.20–0.8	0.10	—	0.25	—	0.05	0.15
2117	0.8	1.0	2.2–3.0	0.20	0.20–0.50	0.10	—	0.25	—	0.05	0.15
2618	0.25	0.9–1.3	1.9–2.7	—	1.3–1.8	—	0.9–1.2	—	0.04–0.10	0.05	0.15
2219	0.20	0.30	5.8–6.8	0.20–0.40	0.02	—	—	0.10	0.02–0.10	0.05(d)	0.15
X2020	0.40	0.04	4.0–5.0	0.30–0.8	0.03	—	—	0.25	0.10	0.05(c)	0.15
2024	0.50	0.50	3.8–4.9	0.30–0.9	1.2–1.8	0.10	—	0.25	—	0.05	0.15
3003	0.6	0.7	0.20	1.0–1.5	—	—	—	0.10	—	0.05(a)	0.15
3004	0.30	0.7	0.25	1.0–1.5	0.8–1.3	—	—	0.25	—	0.05(a)	0.15
4032	11.0–13.5	1.0	0.50–1.3	—	0.8–1.3	0.10	0.50–1.3	0.25	—	0.05	0.15
4043	4.5–6.0	0.8	0.30	0.05	0.05	—	—	0.10	0.20	0.05(a)	0.15
5005	0.40	0.7	0.20	0.20	0.50–1.1	0.10	—	0.25	—	0.05	0.15
5050	0.40	0.7	0.20	0.10	1.0–1.8	0.10	—	0.25	—	0.05(a)	0.15
5052	0.45 Si + Fe		0.10	0.10	2.2–2.8	0.15–0.35	—	0.10	—	0.05(a)	0.15
5154	0.45 Si + Fe		0.10	0.10	3.1–3.9	0.15–0.35	—	0.20	0.20	0.05(a)	0.15
5155	0.30	0.70	0.25	0.20–0.60	3.5–5.0	0.05–0.25	—	0.15	0.15	0.05	0.15

TABLE A3.11 Chemical Composition Limits for Wrought Aluminum Alloys Where No Range Is Given (Single Number Indicates Maximum Permissible Percentage) (*Continued*)

Alloy number	Si	Fe	Cu	Mn	Mg	Cr	Ni	Zn	Ti	Others	
										Each	Total
5454	0.40 Si + Fe		0.10	0.50–1.0	2.4–3.0	0.05–0.20	—	0.25	0.20	0.05	0.15
5056	0.30	0.40	0.10	0.05–0.20	4.5–5.6	0.05–0.02	—	0.10	—	0.05(a)	0.15
5456	0.40 Si + Fe		0.10	0.50–1.0	4.7–5.5	0.05–0.20	—	0.25	0.20	0.05	0.15
5357	0.12	0.17	0.07	0.15–0.45	0.8–1.2	—	—	—	—	0.05	0.15
5457	0.08	0.10	0.20	0.15–0.45	0.8–1.2	—	—	—	—	0.03	0.10
5557	0.10	0.12	0.15	0.10–0.40	0.40–0.8	—	—	—	—	0.03	0.10
5083	0.40	0.40	0.10	0.30–1.0	4.0–4.9	0.05–0.25	—	0.25	0.15	0.05	0.15
5086	0.40	0.50	0.10	0.20–0.7	3.5–4.5	0.05–0.25	—	0.25	0.15	0.05	0.15
6151	0.6–1.2	1.0	0.35	0.20	0.45–0.8	0.15–0.35	—	0.25	0.15	0.05	0.15
6351	0.7–1.3	0.6	0.10	0.40–0.8	0.40–0.8	—	—	—	0.20	0.05	0.15
6053	(f)	0.35	0.1	—	1.1–1.4	0.15–0.35	—	0.10	—	0.05	0.15
6061	0.40–0.8	0.7	0.15–0.40	0.15	0.8–1.2	0.15–0.35	—	0.25	0.15	0.05	0.15
6062	0.40–0.8	0.7	0.15–0.40	0.15	0.8–1.2	0.04–0.14	—	0.25	0.15	0.05	0.15
6063	0.20–0.6	0.35	0.10	0.10	0.45–0.9	0.10	—	0.10	0.10	0.05	0.15
6066	0.9–1.8	0.50	0.7–1.2	0.6–1.1	0.8–1.4	0.40	—	0.25	0.20	0.05	0.15
7072(g)	0.7 Si + Fe		0.10	0.10	0.10	—	—	0.8–1.3	—	0.05	0.15
7075	0.50	0.7	1.2–2.0	0.30	2.1–2.9	0.18–0.40	—	5.1–6.1	0.20	0.05	0.15
7277	0.50	0.7	0.8–1.7	—	1.7–2.3	0.18–0.35	—	3.7–4.3	0.10	0.05	0.15
7178	0.50	0.7	1.6–2.4	0.30	2.4–3.1	0.18–0.40	—	6.3–7.3	0.20	0.05	0.15
7079	0.30	0.40	0.40–0.8	0.10–0.30	2.9–3.7	0.10–0.25	—	3.8–4.8	0.10	0.05	0.15
X8001	0.17	0.45–0.7	0.15	—	—	—	0.9–1.3	—	—	0.05(h)	0.15

Source: *American Society for Metals, Metals Handbook,* Vol. 1, 8th Ed., p 917.

By addition of Cr, Co, Mo, Ti, Al, or Nb, the high temperature strength and creep resistance of the nickel-base materials can be substantially increased. However, these alloys possess low ductility values and require special care in forming of these materials, even at elevated temperatures.

Table A3.9 lists a number of ASME specifications for nickel-based alloy piping and tubing.

Aluminum and Aluminum Alloys

Aluminum and many of its alloys are highly resistant to atmospheric corrosion and to attack by many chemical agents, with the exception of strong alkalis. However, they are subject to galvanic attack if coupled with more noble materials.

Additions of alloying elements increases strengh, but to the detriment of thermal and electrical conductivity, and lowers the material's melting point. Alloying with Cu, Mg, and Si creates heat-treatable alloys that are age-hardenable. Maximum strength can usually be achieved by heating to about 300 to 500°F (150 to 260°C). Effects of working or precipitation hardening can be removed by annealing at temperatures of 600 to 800°F (315 to 425°C).

A system has been devised to designate alloys of aluminum based on the major alloying constituent. See Table A3.10.

Typical classes of wrought aluminum-based materials are given in Table A3.11. The UNS number for each alloy is easily determined by taking the alloy number given in Table A3.11 and preceding it with A9. Thus, for example, the UNS numbers for alloy 6061 is A96061.

Appendix A5 provides a list of material specifications which are acceptable for design and construction of piping systems within the jurisdiction of the ASME Boiler and Pressure Vessel Code and the ASME B31, Code for Pressure Piping. Appendix A6 lists some international material specifications for piping.

REFERENCES

1. ASTM Committee on Terminology, *Compilation of ASTM Standard Definitions,* Fifth Edition (PCN 03–001082–42), 1982.
2. Charles Mantell, *Engineering Materials Handbook,* First Edition, McGraw-Hill Book Co., Inc. 1958.
3. Bain and Paxton, *Alloying Elements in Steel,* American Society for Metals, 1939.
4. Dunn, Whiteley, and Fairhurst, *Molybdenum's Place in the Pressure-Vessel Field,* Climax Molybdenum Company.
5. *Steam, Its Generation and Use*, The Babcock & Wilcox Company, 1972.
6. *The Making, Shaping and Treating of Steel*, Ninth Edition, United States Steel, 1971.
7. *Alloying Elements and Their Effects*, Hardenability Republic Steel Corporation, 1979.
8. *Metals Handbook*, Ninth Edition, Volume 4, Heat Treating, American Society for Metals, 1981.
9. *Temper Embrittlement and Hydrogen Embrittlement in Pressure Vessel Steels*, JPVRC Report No. 2, The Iron and Steel Institute of Japan, 1979.

CHAPTER A4

PIPING CODES AND STANDARDS

Mohinder L. Nayyar, P.E.
ASME Fellow

Codes usually set forth requirements for design, materials, fabrication, erection, test, and inspection of piping systems, whereas standards contain design and construction rules and requirements for individual piping components such as elbows, tees, returns, flanges, valves, and other in-line items. Compliance to code is generally mandated by regulations imposed by regulatory and enforcement agencies. At times, the insurance carrier for the facility leaves hardly any choice for the owner but to comply with the requirements of a code or codes to ensure safety of the workers and the general public. Compliance to standards is normally required by the rules of the applicable code or the purchaser's specification.

Each code has limits on its jurisdiction, which are precisely defined in the code. Similarly, the scope of application for each standard is defined in the standard. Therefore, users must become familiar with limits of application of a code or standard before invoking their requirements in design and construction documents of a piping system.

The codes and standards which relate to piping systems and piping components are published by various organizations. These organizations have committees made up of representatives from industry associations, manufacturers, professional groups, users, government agencies, insurance companies, and other interest groups. The committees are responsible for maintaining, updating, and revising the codes and standards in view of technological developments, research, experience feedback, problems, and changes in referenced codes, standards, specifications, and regulations. The revisions to various codes and standards are published periodically. Therefore, it is important that engineers, designers, and other professional and technical personnel stay informed with the latest editions, addenda, or revisions of the codes and standards affecting their work.

While designing a piping system in accordance with a code or a standard, the designer must comply with the most restrictive requirements which apply to any of the piping elements.

In regard to applicability of a particular edition, issue, addendum, or revision of a code or standard, one must be aware of the national, state, provincial, and local laws and regulations governing its applicability in addition to the commitments made by the owner and the limitations delineated in the code or standard. This chapter covers major codes and standards related to piping. Some of these codes and standards are discussed briefly, whereas others are listed for convenience of reference.

AMERICAN SOCIETY OF MECHANICAL ENGINEERS

The American Society of Mechanical Engineers (ASME) is one of the leading organizations in the world which develops and publishes codes and standards. The ASME established a committee in 1911 to formulate rules for the construction of steam boilers and other pressure vessels. This committee is now known as the ASME Boiler and Pressure Vessel Committee, and it is responsible for the ASME Boiler and Pressure Vessel Code. In addition, the ASME has established other committees which develop many other codes and standards, such as the ASME B31, Code for Pressure Piping. These committees follow the procedures accredited by the American National Standards Institute (ANSI).

ASME BOILER AND PRESSURE VESSEL CODE

The ASME Boiler and Pressure Vessel Code contains 11 sections:

Section I Power Boilers

Section II Material Specifications

Section III Rules for Construction of Nuclear Power Plant Components

- Division 1 Nuclear Power Plant Components
- Division 2 Concrete Reactor Vessel and Containments
- Division 3 Containment Systems and Transport Packaging for Spent Nuclear Fuel and High-Level Radioactive Waste

Section IV Heating Boilers

Section V Nondestructive Examination

Section VI Recommended Rules for Care and Operation of Heating Boilers

Section VII Recommended Rules for Care of Power Boilers

Section VIII Pressure Vessels

- Division 1 Pressure Vessels
- Division 2 Pressure Vessels (Alternative Rules)
- Division 3 Alternative Rules for Construction of High-Pressure Vessels

Section IX Welding and Brazing Qualifications

Section X Fiber-Reinforced Plastic Pressure Vessels

Section XI Rules for In-Service Inspection of Nuclear Power Plant Components

Code Cases: Boilers and Pressure Vessels

Code Cases: Nuclear Components

Primarily, Sections, I, II, III, IV, V, VIII, IX, and XI specify rules and requirements for piping. Section II, V, and IX are supplementary sections of the code because they have no jurisdiction of their own unless invoked by reference in the code of record for construction, such as Section I or III.

Editions and Addenda

Code editions are published every three years and incorporate the additions and revisions made to the code during the preceding three years.

Colored-sheet addenda, which include additions and revisions to individual sections of the code, are published annually. Before the 1986 edition of the code, addenda were published semiannually as summer and winter addenda.

Interpretations

ASME issues written replies to inquiries concerning interpretation of technical aspects of the code. The interpretations for each individual section are published separately as part of the update service to that section. They are issued semiannually up to the publication of the next edition of the code. Interpretations are not part of the code edition or the addenda.

Code Cases

The Boiler and Pressure Vessel Committee meets regularly to consider proposed additions and revisions to the code; to formulate cases to clarify the intent of the existing requirements; and/or to provide, when the need is urgent, rules for materials or construction not covered by existing code rules. The code cases are published in the appropriate code casebook: (1) *Boiler and Pressure Vessel* and (2) *Nuclear Components*. Supplements are published and issued to the code holders or buyers up to the publication of the next edition of the code.

Code case(s) can be reaffirmed or annulled by the ASME Council. Reaffirmed code case(s) can be used after approval by the council. However, the use of code case(s) is subject to acceptance by the regulatory and enforcement authorities having jurisdiction. A code case once used for construction may continue to be used even if it expires later or becomes annulled. An annulled code case may become a part of the addenda or edition of the code or just disappear after its annulment because there may not be any need for it.

ASME SECTION I: POWER BOILERS

Scope

ASME Section I has total administrative jurisdiction and technical responsibility for boiler proper; refer to Fig. A4.1. The piping defined as boiler external piping (BEP) is required to comply with the mandatory certification by code symbol stamping, ASME data forms, and authorized inspection requirements, called Administrative Jurisdiction, of ASME Section I; however, it must satisfy the technical

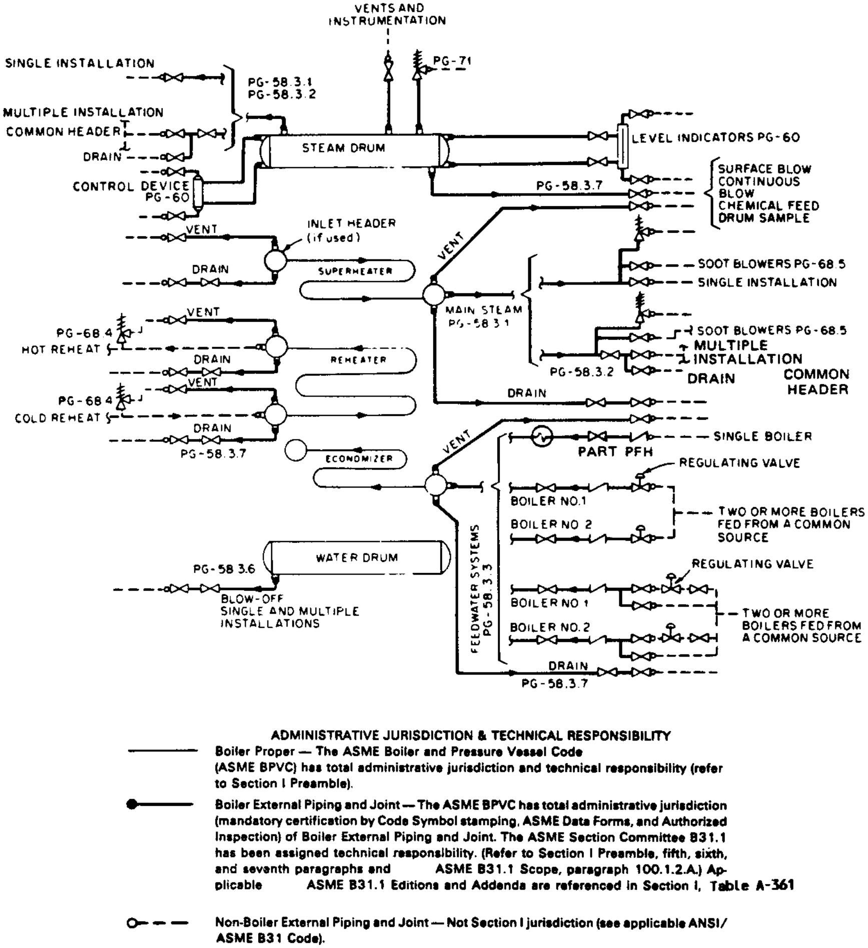
VENTS AND INSTRUMENTATION
PG-71
SINGLE INSTALLATION
PG-58.3.1
PG-58.3.2
MULTIPLE INSTALLATION
COMMON HEADER
DRAIN
STEAM DRUM
LEVEL INDICATORS PG-60
CONTROL DEVICE PG-60
PG-58.3.7
SURFACE BLOW
CONTINUOUS BLOW
CHEMICAL FEED
DRUM SAMPLE
VENT
INLET HEADER (if used)
DRAIN
SUPERHEATER
VENT
SOOT BLOWERS PG-68.5
SINGLE INSTALLATION
MAIN STEAM PG-58.3.1
PG-68.4
HOT REHEAT
VENT
DRAIN
REHEATER
SOOT BLOWERS PG-68.5
MULTIPLE INSTALLATION
PG-58.3.2
DRAIN
COMMON HEADER
PG-68.4
COLD REHEAT
VENT
DRAIN
DRAIN
PG-58.3.7
ECONOMIZER
VENT
SINGLE BOILER
PART PFH
REGULATING VALVE
BOILER NO.1
BOILER NO 2
TWO OR MORE BOILERS FED FROM A COMMON SOURCE
FEEDWATER SYSTEMS PG-58.3.3
WATER DRUM
PG-58.3.6
REGULATING VALVE
BOILER NO 1
BOILER NO.2
TWO OR MORE BOILERS FED FROM A COMMON SOURCE
BLOW-OFF SINGLE AND MULTIPLE INSTALLATIONS
DRAIN
PG-58.3.7

ADMINISTRATIVE JURISDICTION & TECHNICAL RESPONSIBILITY

—— **Boiler Proper — The ASME Boiler and Pressure Vessel Code (ASME BPVC) has total administrative jurisdiction and technical responsibility (refer to Section I Preamble).**

●—— **Boiler External Piping and Joint — The ASME BPVC has total administrative jurisdiction (mandatory certification by Code Symbol stamping, ASME Data Forms, and Authorized Inspection) of Boiler External Piping and Joint. The ASME Section Committee B31.1 has been assigned technical responsibility. (Refer to Section I Preamble, fifth, sixth, and seventh paragraphs and ASME B31.1 Scope, paragraph 100.1.2.A.) Applicable ASME B31.1 Editions and Addenda are referenced in Section I, Table A-361**

○– – – **Non-Boiler External Piping and Joint — Not Section I jurisdiction (see applicable ANSI/ ASME B31 Code).**

FIGURE A4.1 ASME Section I jurisdictional limits and clarifications for jurisdiction over boiler external piping (BEP) and nonboiler external piping (NBEP). *(Figure PG-58.3.1, ASME Section I).*

requirements (design, materials, fabrication, installation, nondestructive examination, etc.) of ASME B31.1, Power Piping Code.[1]

Effective Edition, Addenda, and Code Cases

Code editions are effective on—and may be used on or after—the date of publication printed on the title page. Code addenda are effective on—and may be used on or after—the date of issue. Revisions become mandatory as minimum requirements six months after such date of issuance, except for boilers (or pressure vessels) contracted for before the end of the six-month period.

Use of revisions and code cases that are less restrictive than former requirements of the applicable edition and addenda shall not be made without assurance that they have been accepted by the proper authorities in the jurisdiction in which the power boiler (component) is to be installed. Use of code cases is permissible beginning with the ASME council approval date published on the code case.

ASME SECTION II: MATERIALS

Scope

ASME Section II consists of four parts, three of which contain material specifications and the fourth the properties of materials which are invoked for construction of items within the scope of the various sections of the ASME Boiler and Pressure Vessel Code and ASME B31, Code for Pressure Piping. Therefore, ASME Section II is considered a supplementary section of the code.

Part A: Ferrous Material Specifications. Part A contains material specifications for steel pipe, flanges, plates, bolting materials, and castings and wrought, cast, and malleable iron. These specifications are identified by the prefix SA followed by a number such as SA-53 or SA-106.

Part B: Nonferrous Material Specifications. Part B contains materials specifications for aluminum, copper, nickel, titanium, zirconium, and their alloys. These specifications are identified by the prefix SB followed by a number such as SB-61 or SB-88.

Part C: Specifications for Welding Rods, Electrodes, and Filler Metals. Part C contains material specifications for welding rods, electrodes and filler materials, brazing materials, and so on. These specifications are identified by the prefix SFA followed by a number such as SFA-5.1 or SFA-5.27.

Part D: Properties. Part D covers material properties of all those materials that are permitted per Sections I, III, and VIII of the ASME Boiler and Pressure Vessel Code.

Subpart 1 contains allowable stress and design stress intensity tables for ferrous and nonferrous materials for pipe, fittings, plates, bolts, and so forth. In addition, it provides tensile strength and yield strength values for ferrous and nonferrous materials, and lists factors for limiting permanent strain in nickel, high-nickel alloys, and high-alloy steels.

Subpart 2 of Part D has tables and charts providing physical properties, such as coefficient of thermal expansion, moduli of elasticity, and other technical data needed for design and construction of pressure-containing components and their supports made from ferrous and nonferrous materials.

Effective Edition, Addenda, and Code Cases

The application of ASME Section II is mandatory only when referenced by other sections of the ASME Boiler and Pressure Vessel Code, ASME B31, Code for Pressure Piping, and various other industry codes and standards.[2]

The applicable edition and addenda of ASME Section II shall correspond to the edition and addenda of the referencing code or standard.

Use of a later or the latest edition and addenda of ASME Section II is permissible provided it is acceptable to the enforcement authorities having jurisdiction over the site where the component is to be installed.

For items within the scope of ASME Section XI, the effective edition and addenda of ASME Section II shall be in accordance with the requirements of ASME Section XI.

In case of nonnuclear items or applications, the effective edition addenda and code case shall be determined as described for ASME Section I.

Use of code cases related to materials for ASME Section III applications may be made in accordance with the recommendations of Regulatory Guide 1.85, Materials Code Case Acceptability, ASME Section III, Division 1. The code cases, as approved with or without limitations and listed in Regulatory Guide 1.85, may be used. The code case(s) not listed as approved in Regulatory Guide 1.85 by the U.S. Nuclear Regulatory Commission (NRC) may only be used after seeking approval from the NRC.

ASME SECTION III: NUCLEAR POWER PLANT COMPONENTS

Scope

Division 1 of ASME Section III contains requirements for piping classified as ASME Class 1, Class 2, and Class 3. ASME Section III does not delineate the criteria for classifying piping into Class 1, Class 2, or Class 3; it specifies the requirements for design, materials, fabrication, installation, examination, testing, inspection, certification, and stamping of piping systems after they have been classified Class 1, Class 2, or Class 3 based upon the applicable design criteria and Regulatory Guide 1.26, Quality Group Classifications and Standards for Water-Steam, and Radio-Waste-Containing Components of Nuclear Power Plants. Subsections NB, NC, and ND of ASME III specify the construction requirements for Class 1, Class 2, and Class 3 components, including piping, respectively. Subsection NF contains construction requirements for component supports, and a newly added Subsection NH contains requirements for 1 Class 1 Components in Elevated-Temperature Service. Subsection NCA, which is common to Divisions 1 and 2, specifies general requirements for all components within the scope of ASME Section III.

Division 3 of ASME Section III is a new addition to the code and contains requirements for containment systems and transport packaging for spent nuclear fuel and high–level radioactive waste.

The construction requirements for ASME Class 1, Class 2, and Class 3 piping are based on their degree of importance to safety, with Class 1 piping being subjected to the most stringent requirements and Class 3 to the least stringent requirements. It is noted that a nuclear power plant does have piping systems other than ASME Class 1, Class 2, and Class 3, which are constructed to codes other than ASME Section III. For example, the fire protection piping systems are constructed to National Fire Protection Association (NFPA) standards, and most of the nonnuclear piping systems are constructed to ASME B31.1, Power Piping Code.

When joining piping systems or components of different classifications, the more restrictive requirements shall govern, except that connections between piping and

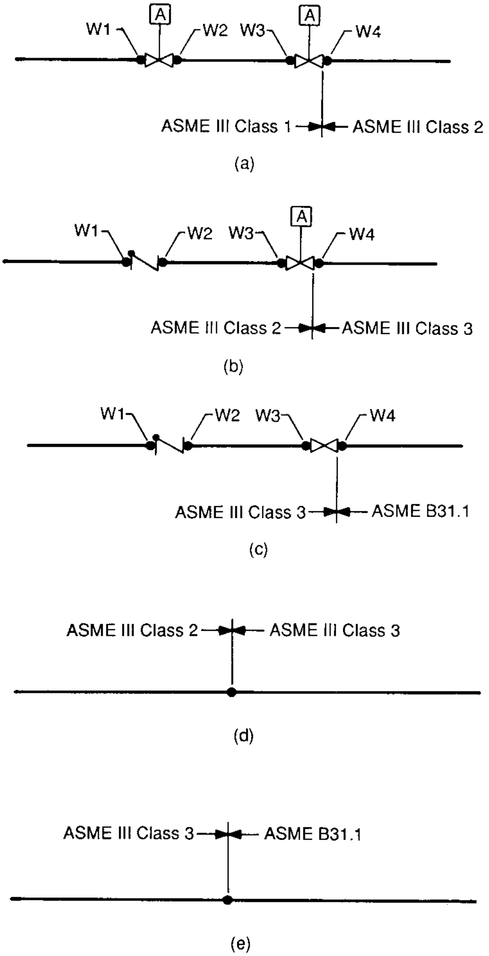

FIGURE A4.2 Code jurisdiction at interface welds between ASME III piping and components, and ASME/ANSI B31.1 piping. (*a*) Welds W1, W2, and W3 are between ASME III Class 1 piping and ASME III Class 1 valves/components. These welds shall comply with the requirements for ASME III Class 1 components. Weld W4 is between ASME III Class 1 valve and ASME III Class 2 piping. This weld shall comply with the requirements for ASME III Class 2 components; (*b*) Welds W1, W2, and W3 are between ASME III Class 2 piping and ASME III Class 2 valves/components. These welds shall comply with the requirements for ASME III Class 2 components. Weld W4 is between ASME Class 2 valve/component and ASME III Class 3 piping. This weld shall comply with the requirements for ASME III Class 3 components; (*c*) Welds W1, W2, and W3 are between ASME III Class 3 piping and ASME III Class 3 valves/components. These welds shall comply with the requirements for ASME III Class 3 components. Weld W4 is between ASME III Class 3 valve/component and ASME B31.1 piping. This weld shall comply with the requirements of ASME B31.1; (*d*) The connecting weld between two different ASME III classes of piping shall comply with more stringent requirements of the connecting classes of piping. In this case, the weld shall meet the requirements for ASME III Class 2 components; (*e*) The connecting weld between ASME III Class 3 and ASME B31.1 piping shall comply with more stringent requirements of ASME III Class 3 piping.

other components such as vessels, tanks, heat exchangers, and valves shall be considered part of the piping. For example, a weld between an ASME Class 1 valve and ASME Class 2 piping shall be made in compliance with the requirements of Subsection NC, which contains rules for ASME Class 2 components, including piping (refer to Fig. A4.2).

Effective Edition, Addenda, and Code Cases

Selection of effective editions and addenda of ASME Section III shall be based upon the following guidelines:

Only the approved edition(s) and addenda of ASME Section III, incorporated by reference in 10 CFR 50.55a, Paragraph (b) (1) are to be used for construction of items within the scope of ASME Section III.

The latest published edition and addenda of ASME Section III may not be approved by the U.S. NRC; therefore, their use can only be made after seeking special permission from the U.S. NRC. Refer to 10 CFR 50.55a, Codes and Standards from time to time to find which edition and addenda of ASME Section III have been approved by the U.S. NRC.

As per Subsubarticle NCA-1140, in no case shall the code edition and addenda dates established in the design specifications be earlier than three years prior to the date the nuclear power plant construction permit application is docketed. In addition, the guidelines of preceding paragraphs shall apply[3]:

Code editions and addenda later than those established in the design specification and documents per the above-delineated approach may be used provided they are approved for use. Also, specific provisions within an edition or addenda later than those established in the design specifications and documents may be used provided all related requirements are met.

All code items, including piping systems, may be constructed to a single code edition and addenda, or each item may be constructed to individually specified code editions and addenda.

The use of code case(s) is optional. Only the U.S. NRC–approved code cases with or without limitations or additional requirements published in the following regulatory guides may be used without a specific request to the U.S. NRC for approval:

Regulatory Guide 1.84: Design and Fabrication Code Case Acceptability ASME Section III, Division 1.

Regulatory Guide 1.85: Materials Code Case Acceptability ASME Section III, Division 1.

The code cases not listed as approved in Regulatory Guides 1.84 and 1.85 may be used only after seeking permission from the U.S. NRC for the specific application.

ASME SECTION V: NONDESTRUCTIVE EXAMINATION

Scope

ASME Section V comprises Subsection A, Subsection B, and mandatory and nonmandatory appendixes. Subsection A delineates the methods of nondestructive examination, and Subsection B contains various ASTM standards covering nondestructive examination methods that have been adopted as standards. The standards contained in Subsection B are for information only and are nonmandatory unless specifically referenced in whole or in part in Subsection A or referenced in other code sections and other codes, such as ASME B31, Pressure Piping Code.

The nondestructive examination requirements and methods included in ASME Section V are mandatory to the extent they are invoked by other codes and standards or by the purchaser's specifications. For example, ASME Section III requires radiographic examination of some welds to be performed in accordance with Article 2 of ASME Section V.[5]

ASME Section V does not contain acceptance standards for the nondestructive examination methods covered in Subsection A. The acceptance criteria or standards shall be those contained in the referencing code or standard.

Effective Edition, Addenda, and Code Cases

The applicable edition and addenda of ASME Section V shall correspond to the edition and addenda of the referencing code.

ASME SECTION VIII: PRESSURE VESSELS

Scope

The rules of ASME Section VIII constitute construction requirements for pressure vessels. Division 2 of ASME Section VIII delineates alternative rules of construction to Division 1 requirements. However, there are some differences between the scopes of the two divisions. Recently added Division 3 provides Alternative Rules for Construction of High-Pressure Vessels.

The rules of ASME Section VIII apply to flanges, bolts, closures, and pressure-relieving devices of a piping system when and where required by the code governing the construction of the piping. For example, ASME B31.1 requires that the safety and relief valves on nonboiler external piping, except for reheat safety valves, shall be in accordance with the requirements of ASME Section VIII, Division 1, UG-126 through UG-133.

Effective Edition, Addenda, and Code Cases

Editions are effective on—and may be used on or after—the date of publication printed on the title page.

Addenda are effective on—and may be used on or after—the date of issue. Addenda and revisions become mandatory as minimum requirements six months after date of issuance, except for pressure vessels contracted for prior to the end of the six-month period.

Code cases may be used beginning with the date of their approval by the ASME. Use of revisions and addenda and code cases that are less restrictive than former requirements must not be made without assurance that they have been accepted by the proper authorities in the jurisdiction where the pressure vessel is to be installed.

ASME SECTION IX: WELDING AND BRAZING QUALIFICATIONS

Scope

ASME Section IX consists of two parts—Part QW and Part QB—which deal with welding and brazing, respectively. In addition, ASME Section IX contains mandatory and nonmandatory appendixes.

ASME Section IX requirements relate to the qualification of welders, welding operators, brazers, and brazing operators and the procedures used in welding and brazing. They establish the basic criteria for welding and brazing observed in the preparation of welding and brazing requirements that affect procedure and performance.

ASME Section IX is a supplemental code. The requirements of ASME Section IX apply when referenced by the governing code or standard or when specified in purchaser's specification. It is usually referenced in other sections of the ASME Boiler and Pressure Vessel Code and the ASME B31, Pressure Piping Code.

Effective Edition, Addenda, and Code Cases

The applicable edition and addenda of ASME Section IX shall correspond to the edition and addenda of the referencing code. However, the later or the latest edition or addenda of ASME Section IX may be used, provided it is acceptable to the enforcement authorities having jurisdiction.

For safety-related items of an operating nuclear power plant, application of ASME Section IX will be in accordance with the requirements of ASME Section XI, Rules for Inservice Inspection of Nuclear Power Plant Components.

For nonsafety-related items, the following guidelines apply:

- Editions are effective and may be used on or after the date of publication on the title page.
- Addenda are effective and may be used on or after the date of issue.
- Addenda and revisions become mandatory as minimum requirements six months after the date of issue, except for pressure vessels or boilers contracted for prior to the end of the six-month period.
- Code cases may be used beginning with the date of their approval by the ASME.
- Use of revisions and addenda and code cases that are less restrictive than former requirements must not be made without assurance they have been accepted by the proper authorities in the jurisdiction where the item is to be installed.

ASME SECTION XI: RULES FOR IN-SERVICE INSPECTION OF NUCLEAR POWER PLANT COMPONENTS

Scope

ASME Section XI comprises three divisions, each covering rules for inspection and testing of components of different types of nuclear power plants. These three divisions are as follows:

ASME Section XI, Division 1: Rules for Inspection and Testing of Components of Light-Water-Cooled Plants

ASME Section XI, Division 2: Rules for Inspection and Testing of Components of Gas-Cooled Plants

ASME Section XI, Division 3: Rules for Inspection and Testing of Components of Liquid-Metal-Cooled Plants.

Since the publication of the first edition of ASME Section XI in 1971, significant changes and additions have been incorporated, and as such, the organization of the later versions of ASME Section XI, Division 1, is considerably different from that of the first edition.

ASME Section XI, Division 1, provides the rules and requirements for in-service inspection and testing of light-water-cooled nuclear power plants. The rules and requirements identify, as a minimum, the areas subject to inspection, responsibilities, provisions for accessibility and inspectability, examination methods and procedures, personnel qualifications, frequency of inspection, record-keeping and report requirements, procedures for evaluating inspection results, subsequent disposition of results of evaluations, and repair requirements.

Division 1 also provides for the design, fabrication, installation, and inspection of replacements. The jurisdiction of Division 1 of ASME Section XI covers individual components and complete power plants that have met all the requirements of the construction code, commencing at that time when the construction code requirements have been met, irrespective of physical location.

When portions of systems or plants are completed at different times, the jurisdiction of Division 1 shall cover only those portions on which all of the construction code requirements have been met. Rules of ASME Section XI apply to ASME Classes 1, 2, 3, and MC components and their supports, core support structures, pumps, and valves.

Rules of ASME Section XI, Division 1, apply to modifications made to ASME III components and their supports after all of the original construction code requirements have been met.

Rules of ASME Section XI, Division 1, apply to systems, portions of systems, components, and their supports not originally constructed to ASME Section III requirements but based on their importance to safety if they were classified as ASME Classes 1, 2, 3, and MC.

Effective Edition, Addenda, and Code Cases

Section 10 CFR 50.55a, Codes and Standards, of the Code of Federal Regulations requires compliance with ASME Section XI for operating nuclear power plants. In addition, 10 CFR 50.55a, Paragraph (b)(2) delineates the editions and addenda of ASME Section XI that are approved for use. Only the approved editions and addenda of ASME Section XI are to be used. The latest published edition and addenda may not be approved by the U.S. NRC; therefore, they can only be used after seeking special permission from the U.S. NRC.

It is recommended that one refer to 10 CFR 50.55a from time to time to determine which edition and addenda of ASME Section XI have been approved by the U.S. NRC and which edition and addenda may be applicable to a nuclear power plant at a particular time.

The requirements of 10 CFR 50.55a are based on the construction permit (CP) docket date and the operating license (OL) date of the nuclear plant.

Code editions and addenda later than those established for a particular application in conformance with the requirements of 10 CFR 50.55a may be used provided they are approved and all related requirements of respective editions or addenda are met.

While establishing a particular edition and addenda of ASME Section XI, consider the limitations and modifications to the specific editions and addenda delineated in Paragraph (b)(2) of 10 CFR 50.55a, and ensure compliance to those limitations and modifications, as applicable.

For repairs and replacements, the applicable edition and addenda shall be the one in effect for that in-service inspection (ISI) interval during which the repairs and replacements are to be made. Refer to articles IWA-4000 and IWA-7000 of ASME Section XI.

Applicable Code Cases

Like the code edition and addenda, code cases are regularly reviewed by the U.S. NRC. The U.S. NRC–approved code cases with or without limitations or additional requirements are published in the Regulatory Guide 1.147, In-Service Inspection Code Case Acceptability of ASME Section XI, Division 1.[4]

Acceptance or endorsement by the U.S. NRC staff applies only to those code cases or code case revisions with the date of ASME Council approval, as shown in the Regulatory Guide 1.147.

ASME B31: CODE FOR PRESSURE PIPING

Starting with Project B31 in March 1926, the first edition of American tentative Standard Code for Pressure Piping was published in 1935. In view of continuous industry developments and increases in diversified needs over the years, decisions were made to publish several sections of the Code for Pressure Piping. Since December 1978, the American National Standards Committee B31 was reorganized as the ASME Code for Pressure Piping B31 Committee under procedures developed by the ASME and accredited by ANSI.

Presently, the following sections of ASME B31, Code for Pressure Piping are published:*

ASME B31.1	Power Piping
USAS B31.2	Fuel Gas Piping
ASME B31.3	Process Piping
ASME B31.4	Liquid Transportation Systems for Hydrocarbons, Liquid Petroleum Gas, Anhydrous Ammonia, and Alcohol
ASME B31.5	Refrigeration Piping
ASME B31.8	Gas Transmission and Distribution Piping Systems
ASME B31.9	Building Services Piping
ASME B31.11	Slurry Transportation Piping Systems

ASME B31.1: POWER PIPING CODE

Scope

ASME B31.1, Power Piping Code, prescribes requirements for the design, material, fabrication, erection, test, and inspection of power and auxiliary service piping systems for electric generation stations, industrial and institutional plants, central and district heating plants, and district heating systems. It does not apply to piping systems covered by other sections of the Code for Pressure Piping, and other piping which is specifically excluded from the scope of this code.[7]

---

* USAS B31.2 was withdrawn in 1988, but it is available for historical and reference purposes.

As explained earlier, the BEP is required to meet administrative jurisdictional requirements of ASME Section I; however, pipe connections meeting all other requirements of ASME B31.1 but not exceeding nominal pipe size (NPS) ½ may be welded to boiler external pipe or boiler headers without inspection and stamping required by ASME Section I.

Nonboiler external piping is defined as all the piping covered by ASME B31.1 with the exception of BEP. The nonboiler external piping must be constructed in accordance with the requirements of this code.

In addition to the piping systems covered by other sections of ASME B31, Pressure Piping Code, ASME B31.1 does not cover the following:

- Economizers, heaters, pressure vessels, and components covered by the ASME Boiler and Pressure Vessel Code (except the connecting piping not covered by the ASME Boiler and Pressure Vessel Code shall meet the requirements of ASME B31.1)
- Building heating and distribution steam piping designed for 15 psig (100 kPa gauge) or less, or hot-water heating systems piping designed for 30 psig (200 kPa gauge) or less
- Piping for roof and floor drains, plumbing, sewers, and sprinkler and other fire-protection systems
- Piping for hydraulic or pneumatic tools and their components downstream of the first stop valve off the system distribution header
- Piping for marine or other installations under federal control
- Piping covered by other sections of ASME B31 and ASME Section III
- Fuel gas piping within the scope of ANSI Z 223.1, National Fuel Gas Code
- Pulverized fuel piping within the scope of NFPA

The requirements of this code apply to central and district heating systems for distribution of steam and hot water away from the plants whether underground or elsewhere, and geothermal steam and hot water piping both to and from wellheads.

The construction of fuel gas or fuel oil piping brought to plant site from a distribution system inside the plant property line is governed by the requirements of ASME B31.1 when the meter assembly is located outside the plant property line. In cases where the meter assembly is located within the plant property line, the requirements of this code shall apply to the fuel gas and fuel oil piping downstream from the outlet of the meter assembly (see Fig. A4.3).

This code also applies to gas and oil systems piping other than that shown in Fig. A4.3. It covers air systems, hydraulic fluid systems piping, and the steam-jet cooling systems piping which are part of the power plant cycle. In addition, building services within the scope of ASME B31.9 but outside the limits of Paragraph 900.1.2 of B31.9 are required to be designed in accordance with ASME B31.1.

Effective Edition, Addenda, and Code Cases

Prior to the publication and implementation of ASME Section III for construction of nuclear power plant components, in some nuclear power plants the safety-related

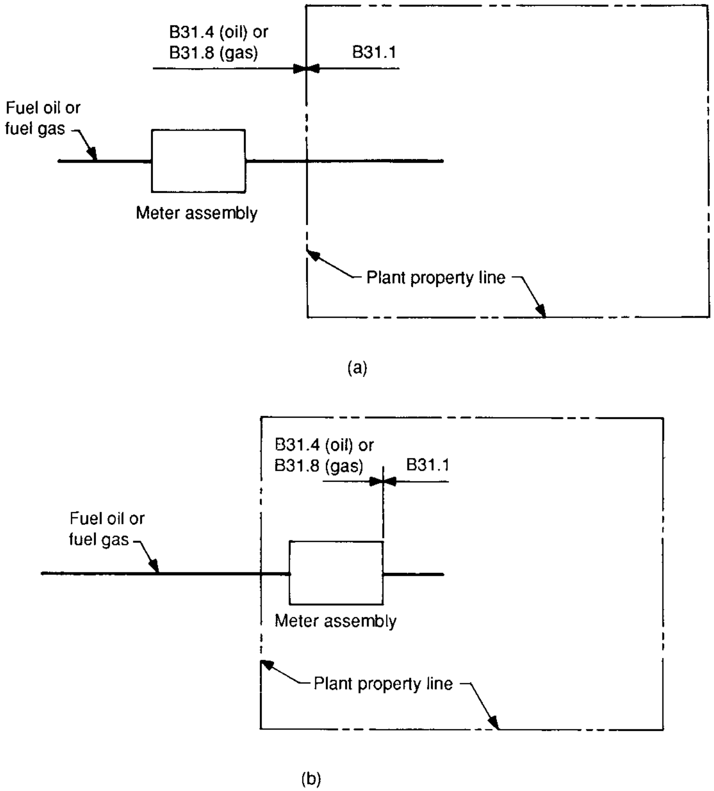
B31.4 (oil) or
B31.8 (gas)
B31.1
Fuel oil or
fuel gas
Meter assembly
Plant property line
B31.4 (oil) or
B31.8 (gas)
B31.1
Fuel oil or
fuel gas
Meter assembly
Plant property line

(a)

(b)

FIGURE A4.3 Jurisdiction of ASME B31.1, B31.4, and B31.8 Over Fuel Gas and Fuel Oil Piping.

piping systems now classified as ASME Classes 1, 2, and 3 were constructed to earlier versions of AMSE B31.1. Therefore, the repairs and replacements of those safety-related piping systems may be made in accordance with the edition and addenda of ANSI B31.1 used for the original construction or the later edition and addenda of ANSI B31.1. Refer to Article IWA-4000 and Article IWA7000 of ASME Section XI for requirements related to repairs and replacements, respectively.

For power piping systems other than the nuclear safety-related piping systems constructed and new piping systems to be constructed to ASME B31.1, the following guidelines shall be used to determine the effective edition and addenda of ASME B31.1:

> Editions are effective and may be used on or after the date of publication printed on the title page. Addenda are effective and may be used on or after the date of publication printed on the title page

The latest edition and addenda, issued six months prior to the original contract date for the first phase of the activity covering a piping system(s) shall be the governing document for design, materials, fabrication, erection, examination, and testing activities for the piping system(s) until the completion of the work and initial operation.[7] Unless agreement is specifically reached between the contracting parties, no code edition and/or addenda shall be retroactive.

Code cases may be used after they have been approved by the ASME Council. The provisions of a code case may be used even after its expiration or withdrawal, provided the code case was effective on the original contract date and it was used for original construction or was adopted prior to completion of work and the contracting parties agreed to its use.

Do not use revisions and code cases that are less restrictive than former requirements without having assurance that they have been accepted by the proper authorities in the jurisdictions where the piping is to be installed.

USAS B31.2: FUEL GAS PIPING

In 1955 a decision was made to publish separate code sections of B31, Code for Pressure Piping. Consequently, Section 2 of B31.1-1955 was updated and revised to publish as USAS B31.2—1968, Fuel Gas Piping. No edition of this code section was published after 1968. This code was withdrawn in 1988.

Scope

USAS B31.2 covers the design, fabrication, installation, and testing of piping systems for fuel gases such as natural gas, manufactured gas, and liquefied petroleum gas (LPG); air mixtures above the upper combustible limit; LPG in the gaseous phase; or mixtures of these gases.

This code applies to fuel gas piping systems both within and between the buildings, from the outlet of the consumer meter assembly, and to and including the first pressure-containing valve upstream of the gas utilization device.

This code does not apply to:

- Vacuum piping systems
- Fuel gas piping systems with metal temperatures above 450°F or below −20°F
- Fuel gas piping systems within petroleum refineries, loading terminals, natural gas processing plants, bulk plants, compounding plants, or refinery tank farms, and so forth within the scope of USAS B31.3
- Fuel gas piping systems in power and atomic energy plants within the scope of USAS B31.1
- Fuel gas piping systems within the scope of USAS B31.8
- Fuel gas piping systems within the scope of USAS Z21.30
- Piping systems within the scope of USAS Z106.1
- Proprietary items of equipment, apparatus, or instruments, such as compressors, gas-generating sets, and calorimeters
- Design and fabrication of pressure vessels covered by the ASME Boiler and Pressure Vessel Code
- Support structures and equipment such as stanchions, towers, building frames, pressure vessels, mechanical equipment, and foundations

- Piping systems for conveying premixed fuel gas-air mixtures which are in the combustible or inflammable limits or range

Effective Edition, Addenda, and Code Cases

USAS B31.2 is no longer used. It can be used for installations which were constructed in compliance with 1968 edition of this code, if permitted by the authorities having the jurisdiction.

ASME B31.3: PROCESS PIPING

Scope

This code prescribes requirements for the materials, design, fabrication, assembly, erection, examination, inspection, and testing of piping within the property limits of facilities engaged in the processing or handling of chemical petroleum or related products. Figure A4.4 provides an illustration of the scope of ASME B31.3. The requirements of ASME B31.3 apply to piping for all fluids, including raw, intermediate, and finished chemicals; petroleum products, gas, steam, air, and water; fluidized solids; and refrigerants.

In case of packaged equipment, the interconnecting piping with the exception of refrigeration piping shall be in compliance with the requirements of ASME B31.3. The refrigeration piping may conform to either ASME B31.3 or ASME B31.5.

The requirements of ASME B31.3 do not apply to piping systems designed for internal gauge pressures at or above 0 but less than 15 (100 kPa gauge) psig provided the fluid handled is nonflammable, nontoxic, and not damaging to human tissue and its design temperature is from −29°C (−20°F) through 180°C (366°F).

The following piping and equipment are not required to comply with the requirements of ASME B31.3:

- Power boiler and the boiler external piping
- Piping covered by ASME B31.4, B31.8, or B31.11, although located on the company property
- Piping covered by applicable governmental regulations
- Piping for fire-protection systems
- Plumbing, sanitary sewers, and storm sewers
- Tubes, tube headers, crossovers, and manifolds of fired heaters which are internal to the heater enclosures
- Pressure vessels, heat exchangers, pumps, compressors, and other fluid-handling or processing equipment, including internal piping and connections for external piping

Effective Edition, Addenda, and Code Cases

The effective edition, addenda, and code cases shall be determined similarly to the approach delineated for ASME B31.1 for piping systems other than the nuclear safety-related piping systems.

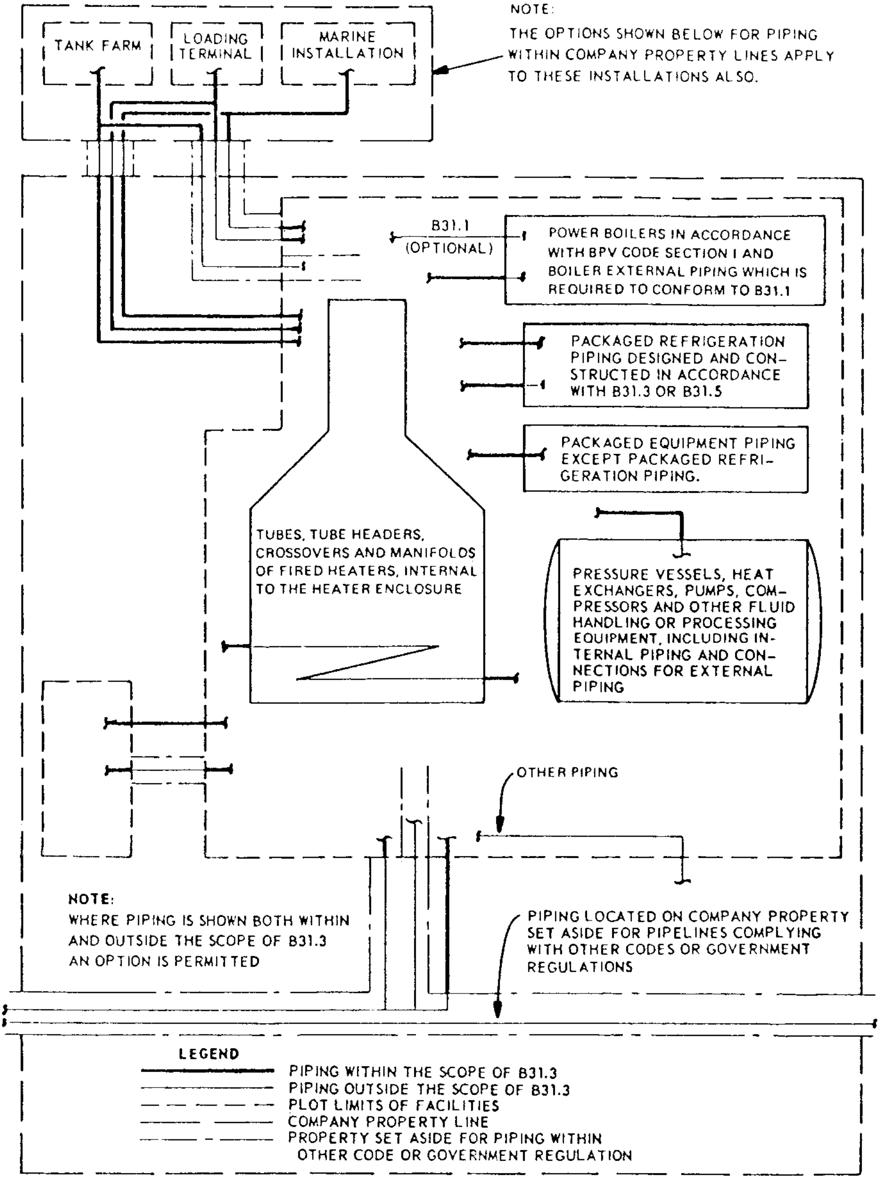
NOTE:
THE OPTIONS SHOWN BELOW FOR PIPING WITHIN COMPANY PROPERTY LINES APPLY TO THESE INSTALLATIONS ALSO.
TANK FARM
LOADING TERMINAL
MARINE INSTALLATION
B31.1
(OPTIONAL)
POWER BOILERS IN ACCORDANCE WITH BPV CODE SECTION I AND BOILER EXTERNAL PIPING WHICH IS REQUIRED TO CONFORM TO B31.1
PACKAGED REFRIGERATION PIPING DESIGNED AND CONSTRUCTED IN ACCORDANCE WITH B31.3 OR B31.5
PACKAGED EQUIPMENT PIPING EXCEPT PACKAGED REFRIGERATION PIPING.
TUBES, TUBE HEADERS, CROSSOVERS AND MANIFOLDS OF FIRED HEATERS, INTERNAL TO THE HEATER ENCLOSURE
PRESSURE VESSELS, HEAT EXCHANGERS, PUMPS, COMPRESSORS AND OTHER FLUID HANDLING OR PROCESSING EQUIPMENT, INCLUDING INTERNAL PIPING AND CONNECTIONS FOR EXTERNAL PIPING
OTHER PIPING
NOTE:
WHERE PIPING IS SHOWN BOTH WITHIN AND OUTSIDE THE SCOPE OF B31.3 AN OPTION IS PERMITTED
PIPING LOCATED ON COMPANY PROPERTY SET ASIDE FOR PIPELINES COMPLYING WITH OTHER CODES OR GOVERNMENT REGULATIONS
LEGEND
PIPING WITHIN THE SCOPE OF B31.3
PIPING OUTSIDE THE SCOPE OF B31.3
PLOT LIMITS OF FACILITIES
COMPANY PROPERTY LINE
PROPERTY SET ASIDE FOR PIPING WITHIN OTHER CODE OR GOVERNMENT REGULATION

FIGURE A4.4 B31.3 Jurisdictional Limits and Options. *(Source: ASME B31.3).*

ASME B31.4: LIQUID TRANSPORTATION SYSTEMS FOR HYDROCARBONS, LIQUID PETROLEUM GAS, ANHYDROUS AMMONIA, AND ALCOHOLS

Scope

Section B31.4 of the ASME Pressure Piping Code prescribes requirements for the design, materials, construction, assembly, inspection, and testing of piping transporting liquids such as crude oil, condensate, natural gasoline, natural gas liquids, liquefied petroleum gas, liquid alcohol, liquid anhydrous ammonia, and liquid petroleum products between producers' lease facilities, tank farms, natural-gas processing plants, refineries, stations, ammonia plants, terminals, and other delivery and receiving points.

The scope of ASME B31.4 also includes the following:

- Primary and associated auxiliary liquid petroleum and liquid anhydrous ammonia piping at pipeline terminals (marine, rail, and truck), tank farms, pump stations, pressure-reducing stations, and metering stations, including scraper traps, strainers, and prover loops
- Storage and working tanks, including pipe-type storage fabricated from pipe and fittings, and piping interconnecting these facilities
- Liquid pertroleum and liquid anhydrous ammonia piping located on property which has been set aside for such piping within petroleum refinery, natural gasoline, gas processing, ammonia, and bulk plants
- Those aspects of operation and maintenance of liquid pipeline systems relating to the safety and protection of the general public, operating company personnel, environment, property, and the piping systems

ASME B31.4 does not apply to

- Auxiliary piping such as water, air, steam, lubricating oil, gas, and fuel
- Pressure vessels, heat exchangers, pumps, meters, and other such equipment, including internal piping and connections for piping except as limited by Paragraph 423.2.4 (b) of ASME B31.4
- Piping designed for internal pressures:
  a. At or below 15 psi (100 kPa) gauge pressure regardless of temperature
  b. Above 15 psi (100 kPa) gauge pressure if design temperature is below −20°F (−29°C) or above 250°F (120°C)
- Casing, tubing, or pipe used in oil wells, wellhead assemblies, oil and gas separators, crude oil production tanks, other producing facilities, and pipelines interconnecting these facilities
- Petroleum refinery, natural gasoline, gas processing, ammonia, and bulk plant piping, except as covered within the scope of the code
- Gas transmission and distribution piping
- The design and fabrication of proprietary items of equipment, apparatus, or instruments, except as limited by this code

- Ammonia refrigeration piping systems provided for in ASME B31.5, Refrigeration Piping Code
- Carbon dioxide gathering and field distribution systems

The rules of this code provide for protection of the general public and operating company personnel, for reasonable protection of the piping system against vandalism and accidental damage by others, and for reasonable protection of the environment.

Effective Edition, Addenda, and Code Cases

To determine the effective edition, addenda, and code cases for an application within the jurisdiction of ASME B31.4, follow the requirements delineated for ASME B31.1 for piping systems other than nuclear safety-related piping systems.

ASME B31.5: REFRIGERATION PIPING

Scope

This section of ASME B31, Pressure Piping Code, contains requirements for the materials, design, fabrication, assembly, erection, testing, and inspection of refrigerant and secondary coolant piping for temperatures as low as −320°F (−195.5°C), except when other sections of the code cover requirements for refrigeration piping.

ASME B31.5 does not apply to the following:

- Self-contained or unit systems subject to the requirements of Underwriters' Laboratories (UL) or other nationally recognized testing laboratories
- Water piping
- Piping designed for external or internal gauge pressure not exceeding 15 psig (100 kPa)

Effective Edition, Addenda, and Code Cases

To determine the effective edition, addenda, and code cases for piping systems within the jurisdiction of ASME B31.5, follow the guidelines delineated for nonnuclear piping systems within the jurisdiction of ASME B31.1.

ASME B31.8: GAS TRANSMISSION AND DISTRIBUTION PIPING SYSTEMS

Scope

A pipeline or transmission line is defined as that pipe which transmits gas from a source or sources of supply to one or more large-volume customers or to a pipe used to interconnect sources of supply. ASME B31.8 prescribes requirements for the design, fabrication, installation, testing, and safety aspects of operation and maintenance of gas transmission and distribution piping systems, including gas pipelines, gas compressor stations, gas metering and regulation stations, gas mains, and service lines up to the outlet of the customer's meter set assembly.

Also included within the scope of ASME B31.8 are gas storage equipment of the closed-pipe type, fabricated or forged from pipe or fabricated from pipe and fittings, and gas storage lines.

The requirements of ASME B31.8 also apply to the use of elements of piping systems, including but not limited to pipe, valves, fittings, flanges, bolting, gaskets, regulators, pressure vessels, pulsation dampeners, and relief valves.

The requirements of ASME B31.8 are applicable to operating and maintenance procedures of existing installations and to the update of existing installations.

ASME B31.8 does not apply to the following:

- Design and manufacture of pressure vessels covered by the ASME Boiler and Pressure Vessel Code
- Piping with metal temperatures above 450°F (232°C) or below −20°F (−29°C)
- Piping beyond the outlet of the customer's meter set assembly (refer to ANSI Z223.1 and NFPA 54)
- Piping in oil refineries or natural gasoline extraction plants, gas-treating plant piping other than the main gas stream piping in dehydration, and all other processing plants installed as part of a gas transmission system, gas manufacturing plants, industrial plants, or mines (see other applicable sections of the ASME Code for Pressure Piping, B31)
- Vent piping to operate at substantially atmospheric pressures for waste gases of any kind
- Wellhead assemblies, including control valves, flow lines between wellhead and trap or separator, or casing and tubing in gas or oil wells
- The design and manufacture of proprietary items of equipment, apparatus, or instruments
- The design and manufacture of heat exchangers
- Liquid petroleum transportation piping systems (refer to ANSI/ASME B31.4)
- Liquid slurry transportation piping systems (refer to ASME B31.11)
- Carbon dioxide transportation piping systems
- Liquefied natural gas piping systems (refer to NFPA 59 and ASME B31.3)

Effective Code Edition, Addenda, and Code Cases

To determine the effective edition, addenda, and code cases to be invoked for an application or piping systems within the jurisdiction of ASME B31.8, follow the criteria delineated for piping systems within the scope of ASME B3 1.1:

No edition and addenda shall be applied retroactively to existing installations insofar as design, fabrication, installation, and testing at the time of construction are concerned. Further, no edition and addenda shall be applied retroactively to established operating pressures of existing installations, except as provided for in Chapter V of ASME B31.8.

ASME B31.9: BUILDING SERVICES PIPING

Scope

ASME B31.9 applies to the following building services:

- Water for heating and cooling
- Condensing water
- Steam or other condensate
- Steam
- Vacuum
- Compressed air and other nontoxic and nonflammable gases

The requirements of this code also apply to boiler external piping for steam boilers with 15 psig (103.5 kPa) maximum pressure and for water heating units having 160 psig (1104 kPa) maximum pressure and 250°F (121°C) maximum temperatures. It is noted that the boiler external piping exceeding the above limits of pressure and temperature fall within the scope of ASME B31.1 and ASME Section I.

This code places size and thickness limitations on the piping made of different materials. The requirements of this code shall apply to the piping of up to and including those sizes and thicknesses. These limitations are as follows:

- *Carbon steel:* NPS 30 (DN 750) in O.D. and 0.500 in (12.7 mm) wall
- *Stainless steel:* NPS 12 (DN 300) and 0.500 in (12.7 mm) wall
- *Aluminum:* NPS 12 (DN 300)
- *Brass and copper:* NPS 12 (DN 300) (12.125 in or 308 mm O.D. for copper tubing)
- *Thermoplastics:* NPS 14 (DN 350)
- *Ductile iron:* NPS 18 (DN 450)
- *Reinforced thermosetting resin:* NPS 14 (DN 350)

Piping made of other materials permitted by this code may also be used for building services.

The piping within the working pressure or temperature limits shown in Table A4.1 shall be designed and constructed in compliance with the requirements of ASME B31.9.

TABLE A4.1 Working Pressure and Temperature Limits of ASME B31.9

Pressure limit		Temperature limit	
Service	Pressure	Service	Temperature
Steam and condensate	150 psig (1000 kPa)	Steam and condensate	366°F (186°C)
Air and gas	150 psig (1000 kPa)		
Liquids	350 psig (2300 kPa)	Gases and vapors	200°F (93°C)
		Nonflammable liquids	250°F (121°C)
Vacuum	1 atm external pressure (100 kPa)	Minimum temperature (all services)	0°F (−18°C)

ASME B31.9 does not cover requirements for economizers, heaters, pumps, tanks, heat exchangers, and other equipment within the scope of ASME Boiler and Pressure Vessel Code.

Effective Code Edition, Addenda, and Code Cases

For any specific application, the effective edition, addenda, and code cases of ASME B31.9 shall be determined in accordance with the approach followed for ASME B31.1.

ANSI/ASME B31.11: SLURRY TRANSPORTATION PIPING SYSTEMS

Scope

Like ASME B31.4, this section of ASME B31, Pressure Piping Code, specifies minimum requirements for the design, materials, construction, assembly, inspection,

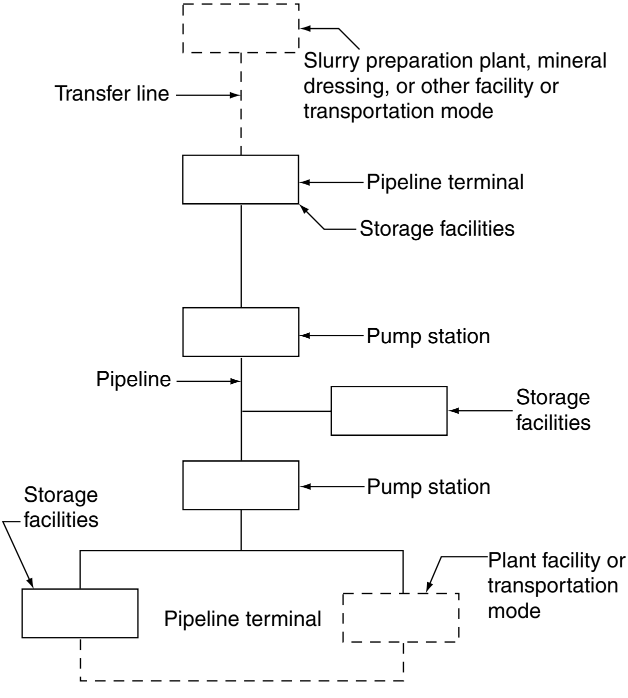
Slurry preparation plant, mineral dressing, or other facility or transportation mode
Transfer line
Pipeline terminal
Storage facilities
Pump station
Pipeline
Storage facilities
Pump station
Storage facilities
Plant facility or transportation mode
Pipeline terminal

FIGURE A4.5 Scope of ANSI/ASME B31.11 Facilities Indicated by Solid Lines are within the Scope of ANSI/ASME B31.11. *(Source Figure 1100.11, ANSI/ASME B31.11).*

testing, operation, and maintenance of piping transporting aqueous slurries of nonhazardous materials, such as oil, mineral ores, and concentrates, between a slurry processing plant or terminal and a receiving plant or terminal. The requirements of ASME B31.11 also apply to the following:

1. Primary and auxiliary slurry piping at storage facilities, pipeline terminals, pump stations, and pressure-reducing stations, including piping up to the first valve of attached auxiliary water lines
2. Slurry piping storage facilities and other equipment located on property which has been set aside for the slurry transportation system
3. Those aspects of operation and maintenance of slurry transportation piping systems which relate to the safety and protection of the general public, operating company personnel, environment, property, and the piping systems.

Refer to Fig. A4.5 for facilities within the scope of ANSI/ASME B31.11.

Effective Code Edition, Addenda, and Code Cases

The effective edition, addenda, and code cases applicable for piping within the scope of ANSI/ASME B31.11 shall be determined in accordance with the guidelines delineated for ASME B31.

ASME PERFORMANCE TEST CODES

The ASME Performance Test Codes (PTC) were originally known as Power Test Codes. These codes provide standard directions and rules for conducting and reporting tests of specific materials such as fuels, equipment, and processes or functions related to power plants. Listed here are some Performance Test Codes which may be of interest in regard to piping:

PTC 1-91	General Instructions
PTC 2-80	Definitions and Values (R 1985)
PTC 4.1-64	Steam Generating Units (R 1991)
PTC 4.3-68	Air Heaters (R 1991)
PTC 4.4-81	Gas Turbine Heat Recovery Steam Generators (R 1992)
PTC 6A-82	Appendix A to Test Code for Steam Turbine (R 1995)
PTC 7-49	Reciprocating Steam-Driven Displacement Pumps (R 1969)
PTC 7.1-62	Displacement Compressors, Vacuum Pumps, and Blowers (R 1969)
PTC 10-65	Compressors and Exhaustors (R 1992)
PTC 12.2-83	Code on Steam Condensing Apparatus (R 1988)
PTC 12.3-77	Deaerators (R 1995)

PTC 12.4-92	Moisture Separator Reheaters
PTC 14-70	Evaporating Apparatus (R 1991)
PTC 16-58	Gas Producers and Continuous Gas Generators (R 1991)
PTC 18-92	Hydraulic Turbines
PTC 19.2-87	Pressure Measurement Instruments and Apparatus
PTC 19.3-74	Temperature Measurement Instruments and Apparatus (R 1986)
PTC 19.5-72	Application Part II of Fluid Meters
PTC 19.16-65	Density Determination of Solids and Liquids
PTC 19.17-65	Determination of the Viscosity of Liquids Instruments and Apparatus
PTC 22-85	Gas Turbine Power Plants
PTC 25-94	Pressure Relief Services
PTC 32.1-69	Nuclear Steam Supply Systems (R 1992)

AMERICAN NATIONAL STANDARDS INSTITUTE

The American National Standards Institute (ANSI) was earlier known as the American Standards Association (ASA). For a short period of time, from 1967 to 1969, it was called the United States of America Standards Institute (USASI).

ANSI provides a forum for development or obtaining a consensus for approval of standards having national impact and serves as a focal point for distribution of national and other standards, including those developed and issued by the International Organization for Standardization (ISO) and foreign governments. Development and approval functions are performed by committees representing a cross section of affected interests, such as engineering societies, manufacturers, trade institutes, fabricators, builders, universities, unions, insurance companies, and government agencies. Many of the committees are chaired or sponsored by engineering societies, such as ASME and the Institute of Electrical and Electronics Engineers (IEEE).

Safety is the basic objective of the engineering design and construction requirements contained in standards developed, approved, and distributed by ANSI. The ANSI standards include prohibition for practices considered unsafe and cautions where advisory warnings, instead of prohibitions, are deemed necessary.

This chapter provides a brief discussion of various sections of ASME B31, Pressure Piping Code, which was earlier known as ANSI B31, Pressure Piping Code. It is envisioned that other ANSI standards may eventually become known as ASME standards; however, they shall be subjected to approval of the ANSI. The following ANSI standards contain provisions related to piping.

ANSI Standards

A13.1-96	Scheme for the Identification of Piping Systems
A112.1.2-91	Air Gaps in Plumbing Systems

A112.6.1M-88	Supports for Off-the-Floor Plumbing Fixtures for Public Use
A112.18.1M-96	Plumbing Fixture Fittings
A112.19.IM-94	Enameled Cast Iron Plumbing Fixtures
A112.19.3M-87	Stainless Steel Plumbing Fixtures (designed for residential use) (R1996)
A112.21.1M-91	Floor Drains
A112.21.2M-83	Roof Drains (revision of ANSI A112.21.2-1971)
A112.36.2M-91	Cleanouts (revision of ANSI A112.36.2-1983)
AG-1-94	Code on Nuclear Air and Gas Treatment
B1.1	Unified Inch Screw Threads
B1.20.1-83	Pipe Threads General Purpose (Inch) (revision and redesignation of ASME/ANSI B2.1-1968) (R1992)
B1.20.3-76	Dryseal Pipe Threads (Inch) (revision and redesignation of B2.2-1968) (R1991)
B16.1-89	Cast Iron Pipe Flanges and Flanged Fittings
B16.3-92	Malleable Iron Threaded Fittings; Classes 150 and 300
B16.4.92	Cast Iron Threaded Fittings; Classes 125 and 250
B16.5-96	Pipe Flanges and Flanged Fittings
B16.9-93	Factory-Made Wrought Steel Butt-Welding Fittings
B16.10-92	Face-To-Face and End-To-End Dimensions of Valves
B16.11-96	Forged Steel Fittings, Socket-Welding and Threaded
B16.12-91	Cast Iron Threaded Drainage Fittings
B16.14-91	Ferrous Pipe Plugs, Bushings, and Locknuts with Pipe Threads
B16.15-85	Cast Bronze Threaded Fittings; Classes 125 and 250
B16.18-84	Cast Copper Alloy Solder Joint Pressure Fittings (R1994)
B16.22-95	Wrought Copper and Copper Alloy Solder Joint Pressure Fittings
B16.23-92	Cast Copper Alloy Solder Joint Drainage Fittings

B16.24-91	Bronze Pipe Flanges and Flanged Fittings; Classes 150 and 300
B16.25-97	Butt-Welding Ends
B16.26-88	Cast Copper Alloy Fittings for Flared Copper Tubes
B16.28-94	Wrought Steel Butt-Welding Short Radius Elbows and Returns
B16.29-94	Wrought Copper and Wrought Copper Alloy Solder Joint Drainage Fittings
B16.32-92	Cast Copper Alloy Solder Joint Fittings for Solvent Drainage Systems
B16.33-90	Manually Operated Metallic Gas Valves for Use in Gas Piping Systems up to 125 psig (sizes ½ through 2)
B16.34-96	Valves—Flanged, Threaded, and Welding End
B16.36-96	Orifice Flanges
B16.38-85	Large Metallic Valves for Gas Distribution (manually operated, NPS 2 ½ to 12, 125 psig maximum) (R1994)
B16.39-86	Malleable Iron Threaded Pipe Unions; Classes 150, 250, and 300 (R1994)
B16.40-85	Manually Operated Thermoplastic Gas Shutoffs and Valves in Gas Distribution Systems (R1994)
B16.41-83	Functional Qualification Requirements for Power-Operated Active Valve Assemblies for Nuclear Power Plants (R1989)
B16.42-87	Ductile Iron Pipe Flanges and Flanged Fittings; Classes 150 and 300 (R1997)
B16.44-95	Manually Operated Metallic Gas Valves for Use in House Piping Systems
B16.45-87	Cast Iron Fittings for Sovent Drainage Systems
B16.47-96	Large Diameter Steel Flanges NPS 26 through NPS 60
B18.2.1-96	Square and Hex Bolts and Screws (Inch Series) Including Hex Cap Screws and Lag Screws; Supplement 1318.2.1
B18.2.2-87	Square and Hex Nuts (Inch Series)
B18.2.3.1M-79	Metric Hex Cap Screws (R1995)
B18.2.3.2M-79	Metric Formed Hex Screws (R1995)
B18.2.3.3M-79	Metric Heavy Hex Screws (R1995)
B18.2.3.4M-84	Metric Hex Flange Screws (R1995)

B18.2.3.5M-79	Metric Hex Bolts; Errata-May 1981 (R1995)
B18.2.3.6M-79	Metric Heavy Hex Bolts (R1995)
B18.2.4.1M-79	Metric Hex Nuts, Style 1 (R1995)
B18.2.4.2M-79	Metric Hex Nuts, Style 2 (R1995)
B18.2.4.3M-79	Metric Slotted Hex Nuts (R1995)
B18.2.4.4M-82	Metric Hex Flange Nuts (R1993)
B18.2.4.5M-79	Metric Hex Jam Nuts (R1990)
B18.2.4.6M-79	Metric Heavy Hex Nuts (R1990)
B18.5-90	Round Head Bolts (Inch Series)
B18.5.2.1M-81	Metric Round Head Short Square Neck Bolts (R1995)
B18.5.2.2M-82	Metric Round Head Square Neck Bolts (R1993)
B18.15-85	Forged Eyebolts (R1995)
B18.18.1M-87	Inspection and Quality Assurance for General Purpose Fasteners (R1994)
B18.18.3M-87	Inspection and Quality Assurance for Special Purpose Fasteners (R1993)
B18.18.4M-87	Inspection and Quality Assurance for Fasteners for Highly Specialized Engineered Applications (R1993)
B18.21.1-72	Lock Washers (Inch Series)
B18.21.2M-94	Lock Washers (Metric Series)
B18.22M-81	Metric Plain Washers (R1990)
B18.22.1-65	Plain Washers (reaffirmation and redesignation of ASA 1327.2-1965) (R1990)
B32.5-77	Preferred Metric Sizes for Tubular Metal Products Other than Pipe (R1988)
B32.6M-84	Preferred Metric Equivalents of Inch Sizes for Tubular Products Other than Pipe (revision of ANSI B32.6-1977) (R1994)
B36.10M-96	Welded and Seamless Wrought Steel Pipe (revision of ANSI B36.10)
B36.19M-85	Stainless Steel Pipe (revision of ANSI B36.19)
MFC-1M-91	Glossary of Terms Used in the Measurement of Fluid Flow in Pipes
MFC-6M-87	Measurement of Fluid Flow in Pipes Using Vortex Flow Meters

MFC-7M-87	Measurement of Gas Flow by Means of Critical Flow Venturi Nozzles (R1992)
N45.2.1-80	Cleaning of Fluid Systems and Associated Components for Nuclear Power Plants
N278.1-75	Self-Operated and Power-Operated Safety-Related Valves Functional Specification Standard, Reactor Plants and Their Maintenance (R 1992)
NQA-1-1997	Quality Assurance Program Requirements for Nuclear Facilities
TDP-1-85	Recommended Practices for the Prevention of Water Damage to Steam Turbines Used for Electric Power Generation (Fossil)
TDP-2-85	Recommended Practices for the Prevention of Water Damage to Steam Turbines Used for Electric Power Generation (Revision of ASME Standard No. TWDPS-1-1973, Part 2) (Nuclear)

ANSI Guides/Manuals

1986	Guide for Gas Transmission and Distribution Piping Systems-1986; Addenda 1-1986, Addenda 2-1987, Addenda 3-1987
B31 Guide-77	Corrosion Control for ANSI B31.1, Power Piping Systems
B31 Guide-91	Manual for Determining the Remaining Strength of Corroded Pipelines (a supplement to ASME B31 Code for Pressure Piping)
1001-88	Performance Requirements for Pipe Applied Atmospheric Type Vacuum Breakers
1003-93	Performance Requirements for Water Pressure Reducing Valves
1037-90	Performance Requirements for Pressurized Flushing Devices (Flushometers) for Plumbing Fixtures
1045-87	Performance Standard and Installation Procedures for Aluminum Drain, Waste, and Vent Pipe with End Cap Components

Other ASME/ANSI Publications

The following is a list of additional ASME/ANSI publications which are of interest to people engaged in piping design, construction, operation, and maintenance activities:

B16.20-93	Metallic Gaskets for Pipe Flanges—Ring Joint, Spiral-Wound and Jacketed
B16.21-92	Nonmetallic Flat Gaskets for Pipe Flanges

AMERICAN SOCIETY FOR TESTING AND MATERIALS

The American Society for Testing and Materials (ASTM) is a scientific and technical organization that develops and publishes voluntary standards on the characteristics and performance of materials, products, systems, and services. The standards published by the ASTM include test procedures for determining or verifying characteristics, such as chemical composition, and measuring performance, such as tensile strength and bending properties. The standards cover refined materials, such as steel, and basic products, such as machinery and fabricated equipment. The standards are developed by committees drawn from a broad spectrum of professional, industrial, and commercial interests. Many of the standards are made mandatory by reference in applicable piping codes.

The ASTM standards are published in a set of 67 volumes. Each volume is published annually to incorporate new standards and revisions to existing standards and to delete obsolete standards. Listed here are the 67 volumes, divided among 16 sections, published by the ASTM.

Section 1: Iron and Steel Products

Volume 01.01	Steel—Piping, Tubing, Fittings
Volume 01.02	Ferrous Castings; Ferroalloys
Volume 01.03	Steel—Plate, Sheet, Strip, Wire
Volume 01.04	Steel—Structural, Reinforcing, Pressure Vessel, Railway
Volume 01.05	Steel—Bars, Forgings, Bearing, Chain, Springs
Volume 01.06	Coated Steel Products
Volume 01.07	Shipbuilding

Section 2: Nonferrous Metal Products

Volume 02.01	Copper and Copper Alloys
Volume 02.02	Aluminum and Magnesium Alloys

Volume 02.03	Electrical Conductors
Volume 02.04	Nonferrous Metals—Nickel, Cobalt, Lead, Tin, Zinc, Cadmium, Precious, Reactive, Refractory, Metals, and Alloys
Volume 02.05	Metallic and Inorganic Coatings; Metal Powders, Sintered P/M Structural Parts

Section 3: Metals Test Methods and Analytical Procedures

Volume 03.01	Metals—Mechanical Testing: Elevated and Low-Temperature Tests, Metallography
Volume 03.02	Wear and Erosion, Metal Corrosion
Volume 03.03	Nondestructive Testing
Volume 03.04	Magnetic Properties; Metallic Materials for Thermostats, Electrical Heating and Resistance, Heating, Contacts, and Connectors
Volume 03.05	Analytical Chemistry of Metals, Ores, and Related Materials (I)
Volume 03.06	Analytical Chemistry of Metals, Ores, and Related Materials (II)

Section 4: Construction

Volume 04.01	Cement, Lime, Gypsum
Volume 04.02	Concrete and Aggregates
Volume 04.03	Road and Paving Materials, Pavement Management Technologies
Volume 04.04	Roofing, Waterproofing, and Bituminous Materials
Volume 04.05	Chemical-Resistant Materials; Vitrified Clay, Concrete, Fiber-Cement Products; Mortars; Masonry
Volume 04.06	Thermal Insulation; Environmental Acoustics
Volume 04.07	Building Seals and Sealants; Fire Standards; Building Constructions
Volume 04.08	Soil and Rock; Dimension Stones; Geosynthetics
Volume 04.09	Wood

Section 5: Petroleum Products, Lubricants, and Fossil Fuels

Volume 05.01	Petroleum Products and Lubricants (1): D 56-D 1947
Volume 05.02	Petroleum Products and Lubricants (II): D 1949-D 3601
Volume 05.03	Petroleum Products and Lubricants (III): D 3602-latest; Catalysts
Volume 05.04	Test Methods for Rating Motor, Diesel, and Aviation Fuels
Volume 05.05	Gaseous Fuels; Coal and Coke

Section 6: Paints, Related Coatings, and Aromatic

Volume 06.01	Paint—Tests for Formulated Products and Applied Coatings
Volume 06.02	Paint—Pigments, Resins, and Polymers; Cellulose
Volume 06.03	Paint—Fatty Oils and Acids, Solvents, Miscellaneous; Aromatic Hydrocarbons

Section 7: Textiles

Volume 07.01	Textiles (I): D76-D3219
Volume 07.02	Textiles (II): D3333-latest

Section 8: Plastics

Volume 08.01	Plastics (I): C 177-D 1600
Volume 08.02	Plastics (II): D 1601-D 3099
Volume 08.03	Plastics (III): D 3100-latest
Volume 08.04	Plastic Pipe and Building Products

Section 9: Rubber

Volume 09.01	Rubber, Natural, and Synthetic—General Test Methods; Carbon Black
Volume 09.02	Rubber Products, Industrial—Specifications and Related Test Methods; Gaskets; Tires

Section 10: Electrical Insulation and Electronics

Volume 10.01	Electrical Insulation (I) D69-D2484
Volume 10.02	Electrical Insulation (II) D2518-latest

Volume 10.03	Electrical Insulating Liquids and Gas; Electrical Protective Equipment
Volume 10.04	Electronics (I)
Volume 10.05	Electronics (II)

Section 11: Water and Environmental Technology

Volume 11.01	Water (I)
Volume 11.02	Water (II)
Volume 11.03	Atmospheric Analysis; Occupational Health and Safety
Volume 11.04	Pesticides; Resource Recovery; Hazardous Substances and Oil Spill Responses; Waste Management; Biological Effects

Section 12: Nuclear, Solar, and Geothermal Energy

Volume 12.01	Nuclear Energy (I)
Volume 12.02	Nuclear, Solar, and Geothermal Energy

Section 13: Medical Devices and Services

Volume 13.01	Medical Devices, Emergency Medical Services

Section 14: General Methods and Instrumentation

Volume 14.01	Analytical Methods—Spectroscopy; Chromatography; Computerized Systems
Volume 14.02	General Test Methods, Nonmetal; Laboratory Apparatus; Statistical Methods; Appearance of Materials; Durability of Nonmetallic Materials
Volume 14.03	Temperature Measurement

Section 15: General Products, Chemical Specialties, and End Use Products

Volume 15.01	Refractures; Carbon and Graphite Products; Activated Carbon
Volume 15.02	Glass; Ceramic Whitewares
Volume 15.03	Space Simulation; Aerospace and Aircraft; High Modulus Fibers and Composites

Volume 15.04	Soap; Polishes; Leather; Resilient Floor Coverings
Volume 15.05	Engine Coolants; Halogenated Organic Solvents; Industrial Chemicals
Volume 15.06	Adhesives
Volume 15.07	End Use Products
Volume 15.08	Fasteners
Volume 15.09	Paper; Packaging; Flexible Barrier Materials; Business Copy Products

Section 00: Index

Volume 00.01	Subject Index and Alphanumeric List

AMERICAN GAS ASSOCIATION

The following publications of the American Gas Association (AGA) are of interest to people associated with the design, construction, operation, and maintenance of gas systems piping.

Z223.1-92	National Fuel Gas Code, Fifth Edition
Z22.3-92	National Fuel Gas Code Handbook, Second Edition

AMERICAN PETROLEUM INSTITUTE

The American Petroleum Institute (API) publishes specifications (Spec.), bulletins (Bull.), recommended practices (RP), standards (Std.), and other publications (Publ.) as an aid to procurement of standardized equipment and materials. These publications are primarily intended for use by the petroleum industry. However, they can be and are used by others in that they are referenced in a code or invoked in the purchase order/specification governing the design and construction of piping systems. For example API Specification 5L and the API Standard 605 are referenced in ASME B31.1, Power Piping Code.

The following documents, which relate to piping, are published by the API.

Specifications (Spec.)

Spec. 2B-96	Specification for the Fabrication of Structural Steel Pipe
Spec. 6D-94	Specification for Pipeline Valves (Gate, Plugs, Ball, and Check Valves)

Spec. 5L-95	Specification for Line Pipe
Spec. 5LC-91	Specification for CRA Line Pipe
Spec. 6FA-94	Specification for Fire Test for Valves
Spec. 6FC-94	Specification for Fire Test for Valves with Automatic Backseats
Spec. 15HR-95	Specification for High Pressure Fiberglass Line Pipe
Spec. 15LE-95	Specification for Polyethylene Line Pipe (PE)
Spec. 15LR-90	Specification for Low Pressure Fiberglass Line Pipe
Spec. 5B-88	Specification for Threading, Gauging, and Thread Inspection of Casing, Tubing, and Line Pipe Threads; Thirteenth Edition, Supplement 1, July 1990
Spec. 6FA-94	Specification for Fire Test for Valves
Spec. 6B-92	API specification for Fire Test for End connections
Spec. 6FC-94	Specification for Fire Test for Valves with Automatic Backseats
Spec. 6FD-95	Specification for Fire Test for Check Valves
Spec. 14A-94	Specification for Subsurface Safety Valve Equipment
Spec. 14D-94	Specification for Wellhead Surface Safety Valves and Underwater Safety Valves for Offshore Service

Bulletins (Bull.)

Bull. 5C3-94	Bulletin on Formulas and Calculations for Casing, Tubing, Drill Pipe, and Line Pipe Properties
Bull. 6AF-95	Bulletin on Capabilities of API Flanges Under Combinations of Load
Bull. 6F2-94	Bulletin on Fire Resistance Improvements for API Flanges

Recommended Practices (RP)

RP 5A3	Recommended Practice on Threaded Compounds for Casing, Tubing, and Line Pipe
RP 5A5-97	Recommended Practice for Field Inspection of New Casing, Tubing, and Plain-End Drill Pipe
RP 5B1-96	Recommended Practice for Gauging and Inspection of Casing, Tubing, and Line Pipe Threads

RP 5L1-96	Recommended Practice for Railroad Transportation of Line Pipe
RP 5L2-87	Recommended Practice for Internal Coating of Line Pipe for Noncorrosive Gas Transmission Service
RP 5L3-96	Recommended Practice for Conducting Drop-Weight Tear Tests on Line Pipe
RP 51-5-75	Recommended Practice for Marine Transportation of Line Pipe; First Edition
RP 5L6-79	Recommended Practice for Transportation of Line Pipe on Inland Waterways; First Edition
RP 5L7-88	Recommended Practices for Unprimed Internal Fusion Bonded Epoxy Coating of Line Pipe
RP 5L8-96	Recommended Practice for Field Inspection of New Line Pipe
RP 6G-82	Recommended Practice for Through Flowline (TFL) Pump Down Systems
Bull 6AF-95	Technical Report on Capabilities of API Flanges under Combinations of Load
Bull 6AF1-91	Bulletin on Temperature Derating of API Flanges Under Combinations of Loading
Bull 6RS-90	Standardization of Valves and Wellhead Equipment
RP 1OE-94	Recommended Practice for Application of Cement Lining to Steel Tubular Goods, Handling, Installation, and Joining; Third Edition ISO 10409
RP 11V7-90	Recommended Practice for Repair, Testing, and Setting Gas Lift Valves; First Edition
RP 15TL4-93	Recommended Practice for Care and Use Fiberglass Tubulars
RP 17B-88	Recommended Practice for Flexible Pipe
RP 520 PTI-93	Recommended Practice for Sizing, Selection, and Installation of Pressure-Relieving Devices in Refineries, Part I—Sizing and Selection
RP 520 PT II 94	Recommended Practice Sizing, Selection, and Installation of Pressure-Relieving Devices in Refineries, Part II—Installation
RP 574-90	Inspection of Piping, Tubing, Valves, and Fittings; First Edition (Replaces Guide for Inspection of Refinery Equipment Chapter XI)

RP 1102-93	Recommended Practice for Liquid Petroleum Pipelines Crossing Railroads and Highways
RP 1107-91	Recommended Pipe Line Maintenance Welding Practices
RP 1109-93	Recommended Practice for Marking Liquid Petroleum Line Facilities
RP 1110-97	Recommended Practice for Pressure Testing of Liquid Petroleum Pipelines

Standards (Std.)

Std. 526-95	Flanged Steel Pressure-Relief Valves Seat
Std. 527-91	Seat Tightness of Pressure Relief Valves
Std. 594-91	Wafer and Wafer-Lug Check Valves
Std. 598-90	Valve Inspection and Testing
Std. 599-94	Metal Plug Valves—Flanged and Welding End
Std. 600-91	Steel Gate Valves—Flanged and Butt-Welding Ends
Std. 602-93	Compact Steel Gate Valves—Flanged, Threaded, Welding, and Extended Body Ends
Std. 603-91	Class 150, Cast, Corrosion-Resistant, Flanged-End Gate Valves
Std. 607-93	Fire Test for Soft-Seated Quarter Turn Valves
Std. 608-95	Metal Ball Valves—Flanged, Threaded and Welding Ends
Std. 609-91	Lug and Wafer Type Butterfly Valves
Std. 1104-94	Welding of Pipelines and Related Facilities; Seventeenth Edition

Publications (Publ.)

Publ. 1113-93	Developing a Pipeline Supervisory Control Center

AMERICAN WATER WORKS ASSOCIATION

The American Water Works Association (AWWA) publishes standards that cover requirements for pipe and piping components used in water treatment and distribution systems, including specialty items such as fire hydrants. It also publishes several

AWWA manuals relative to design, installation, operation, management, and training. The AWWA standards are used for design, fabrication, and installation of large-diameter piping for water systems not covered by ASME Boiler and Pressure Vessel Code, ASME B31, Code for Pressure Piping, and other codes. Conformance to AWWA standards is required either by being referenced in the codes governing the construction of water systems piping or by the enforcement authorities having jurisdiction over the water systems piping.

Refer to Table C1.2 of Chapter C1, Part C of this handbook for a comprehensive listing of AWWA publications and standards dealing with piping.

AMERICAN WELDING SOCIETY

The American Welding Society (AWS) publishes handbooks, manuals, guides, recommended practices, specifications, and codes. The specifications for filler metals are in the AWS A5 series. The filler metal specifications are usually cited in design documents. The welding procedures are in the D10 series. The AWS handbook is published in five volumes and is intended to be an aid to the user and producer of welded products.

The following is a list of AWS publications directly related to piping. The AWS A5 series filler metal specifications are not included in the list since they can be used for a multitude of items other than piping.

AWS Welding Handbook

Volume 1	Fundamentals of Welding
Volume 2	Welding Processes
Volume 3	Welding Processes
Volume 4	Engineering Applications—Materials
Volume 5	Engineering Applications—Design Brazing Manual, Soldering Manual
AWS A3.0	Soldering Manual, Brazing Handbook, Welding Terms and Definitions, including Terms for Brazing, Soldering, Thermal Spraying, and Thermal Cutting
AWS A5.01	Filler Metal Procurement Guidelines
AWS D10.4	Recommended Practices for Welding Austenitic Chromium-Nickel Stainless Steel Piping and Tubing
AWS D10.6	Recommended Practices for Gas Tungsten Arc Welding of Titanium Pipe and Tubing
AWS D10.7	Recommended Practices for Gas Shielded Arc Welding of Aluminum and Aluminum Alloy Pipe
AWS D10.8	Recommended Practices for Welding of Chromium-Molybdenum Steel Piping and Tubing

AWS D10.10	Recommended Practices for Local Heating of Welds in Piping and Tubing
AWS D10.11	Recommended Practices for Root Pass Welding of Pipe Without Backing
AWS D10.12	Recommended Practices for Procedures for Welding Low Carbon Steel Pipe

AIR-CONDITIONING AND REFRIGERATION INSTITUTE

The Air-Conditioning and Refrigeration Institute (ARI) publishes standards, guidelines, and directories of certification. Some of these standards and guidelines, listed here, may be used for design and construction of refrigeration piping systems.

Standards

720-88	Refrigerant Access Valves and Hose Connectors
750-87	Thermostatic Refrigerant Expansion Valves
760-87	Solenoid Valves for Use with Volatile Refrigerants
770-84	Refrigerant Pressure Regulating Valves

Guidelines

C-95	Guideline for ARI Recommended Dimensions of Steel Solder/Braze Fittings

AMERICAN SOCIETY OF HEATING REFRIGERATING AND AIR-CONDITIONING ENGINEERS

The following standards, guidelines, and handbooks published by the American Society of Heating Refrigeration and Air Conditioning Engineers (ASHRAE) relate to piping:

Standards

41.3-89	Standard Method for Pressure Measurement
41.4-84	Standard Method for Measurement of Proportion of Oil in Liquid Refrigerant

41.6-94	Standard Method for Measurement of Moist Air Properties
41.7-84	Standard Method for Measurement of Flow of Gas
41.8-89	Standard Methods of Measurement of Flow of Liquids in Pipes Using Orifice Flowmeters

Guidelines

1-89	Guidelines for Commissioning of HVAC Systems
2-86	Guidelines for Engineering Analysis of Experimental Data

Handbooks

1993 ASHRAE Handbook Fundamentals I-P Edition
1993 ASHRAE Handbook Fundamentals SI Edition
1995 ASHRAE Handbook HVAC Applications IP Edition
1995 ASHRAE Handbook HVAC Applications SI Edition
1992 ASHRAE Handbook HVAC Systems and Equipment IP Edition
1992 ASHRAE Handbook HVAC Systems and Equipment SI Edition
1994 ASHRAE Handbook Refrigeration Systems and Applications I-P Edition
1994 ASHRAE Handbook Refrigeration Systems and Applications SI Edition

AMERICAN SOCIETY OF SANITARY ENGINEERS

The American Society of Sanitary Engineers (ASSE) publishes many standards, some of which are ANSI approved. The following is a list of standards which contain requirements related to sanitary piping.

Standards

1001-88	Performance Requirements for Pipe Applied Atmospheric Type Vacuum Breakers
1003-93	Performance Requirements for Water Pressure Reducing Valves
1005-86	Performance Requirements for Water Heaters Drain Valves 3″ IPS
1029-94	Performance Requirements for Dual Check Valve Type Backflow Preventers

1032-80	Performance Requirements for Dual Check Valve Type Backflow Preventers for Carbonated Beverage Dispensers
1037-90	Performance Requirements for Pressurized Flushing Devices (Flushometers) for Plumbing Fixtures
1045-87	Performance Standard and Installation Procedures for Aluminum Drain, Waste, and Vent Pipe with End Cap Components
1046-90	Performance Requirements for Thermal Expansion Relief Valve
1048-93	Performance Requirements for Double Check Detector Assembly Backflow Preventer
1047-93	Performance Requirement for Reduced Pressure Detector Backflow Preventer
1050-91	Performance Requirements for Air Admittance Valves for Plumbing DWV Systems Stack Type Devices
1051-90	Performance Requirements for Air Admittance Valves for Plumbing Drainage Systems Fixture and Branch Devices
1052-93	Performance Requirements for Hose Connection Backflow Preventers
1056-93	Performance Requirements for Back Siphonage Backflow Vacuum Breakers

AMERICAN SOCIETY OF CIVIL ENGINEERS

The following documents, which are published by the American Society of Civil Engineers (ASCE), contain information related to piping. The contents of these documents can be used in design and construction of appropriate piping systems.

12-92.1.1	Standard Guidelines for the Design of Urban Subsurface Drainage
13-93.1.1	Standard Guidelines for Installation of Urban Subsurface Drainage
14-94.1.1	Standard Guidelines for Operation and Maintenance of Urban Subsurface Drainage
15-93.1.1	Standard Practice for Direct Design of Buried Precast Concrete Pipe Using Standard Installations

Publications Guideline for the Seismic Design of Oil and Gas Pipeline Systems (1984)

Report on Pipeline Location, 1965 Edition

AMERICAN SOCIETY FOR NONDESTRUCTIVE TESTING

The American Society for Nondestructive Testing (ASNT) publishes recommended practices concerning procedures, equipment, and qualification of personnel for nondestructive testing. The following practice is cited in several codes and standards which contain requirements for piping:

SNT-TC-1A-92	Recommended Practice for Nondestructive Testing Personnel Qualification

AMERICAN IRON AND STEEL INSTITUTE

The following publications of the American Iron and Steel Institute (AISI) provide design guidelines for use of stainless steel in piping systems.

E-3-89	Welded Steel Pipe Steel Plate Engineering Data
E-6-84	Handbook of Steel Pipe
SG-862-90	Modern Sewer Design

AMERICAN NUCLEAR SOCIETY

The following American Nuclear Society (ANS) standards contain requirements for nuclear power plant piping systems:

8.9-87	Nuclear Criticality Safety Criteria for Steel Pipe Intersection Containing Aqueous Solutions of Fissile Materials
51.10-91	Auxiliary Feedwater System for Pressurized Water Reactor
56.2-84	Containment Isolation Provisions for Fluid Systems after a LOCA
56.3-77	Overpressure Protection of Low Pressure Systems Connected to the Reactor Coolant Pressure Boundary
56.4-83	Pressure and Temperature Transient Analysis for Light Water Reactor Containment

56.8-94	Containment System Leakage Testing Requirements
58.2-88	Design Basis for Protection of Light Water Nuclear Power Plants Against Effects of Postulated Pipe Rupture
59.51-89	Fuel Oil Systems for Emergency Diesel Generators

BUILDING OFFICIALS CONFERENCE OF AMERICA

The Building Officials Conference of America (BOCA) publishes a series of national codes, manuals, training aids, and other documents which contain technical requirements and other information related to piping. The following is a partial list of these publications:

National Codes

National Building Code
National Mechanical Code
National Plumbing Code
National Private Sewage Disposal Code
National Fire Prevention Code
National Energy Conservation Code

Manuals

BOCA National Code Interpretations
Fire Protection Systems Workbook
Plumbing Materials and Sizing Selector

DUCTILE IRON PIPE RESEARCH ASSOCIATION

The following documents published by the Ductile Iron Pipe Research Association contain guidelines, requirements, and other technical information related to ductile iron piping systems:

Pipe Material Comparison Booklet
Ductile Iron Pipe Characteristics/Applications
Design of Ductile Iron Pipe on Supports
Ductile Iron Pipe for Wastewater Applications
Cement-Mortar Linings for Ductile Iron Pipe
Direct Tapping Comparison Study

Ductile Iron Pipe Energy Savings
Ductile Iron Pipe
Flanged Ductile Iron Pipe
Gasket Materials Used for Ductile Iron Pipe in Water and Sewage Service
Linings Available for Ductile Iron Pipe & Fittings
Thrust Restraint Design for Ductile Iron Pipe
Truck Loads on Pipe Buried at Shallow Depths
Bridge Crossings with Ductile Iron Pipe
Ductile Iron Pipe Subaqueous Crossings
Hydraulic Analysis of Ductile Iron Pipe
Stray Current Effects on Ductile Iron Pipe
Polyethylene Encasement: Effective, Economical Protection for Ductile Iron Pipe in Corrosive Environments
Direct Tapping of Ductile Iron Pipe Encased in Polyethylene
Tapping Tests on Ductile Iron Pipe
A Comparison of Engineering Considerations for Pressure Pipe
Ductile Iron Pipe versus pvc
Ductile Iron pipe vs. Steel Pipe
Polyethylene Encasement Installation Guide
Field Welding and Cutting Ductile Iron Pipe

It may also be prudent to list our web site address (http://www.dipra.org) here so that people that require information about ductile iron pipe can easily contact us.

Ductile Iron Pipe in Deep Trench Installations
Ductile Iron Pipe Installation Guide
Ductile Iron Pipe Subaqueous Crossings
Concentrated Consulting Engineering Programs
Polyethylene Encasements
Corrosion Control Seminars
Ductile Iron Pipe Thrust Restraint Design, 1986 Edition
Inside Diameter/Velocity and Headloss/Pumping Costs

EXPANSION JOINT MANUFACTURERS ASSOCIATION

The Expansion Joint Manufacturers Association (EJMA) publishes a handbook called the *Standards of the Expansion Joint Manufacturers Association.* The book contains manufacturing standard practices as well as comprehensive and detailed engineering data concerning pipe expansion joint types, installation layouts and locations, movements, forces, moments, cycle-life expectancy, and effects of corrosion, erosion, and testing.

FLUID CONTROLS INSTITUTE

The Fluid Controls Institute (FCI) publishes voluntary standards that have been developed by consensus of the member companies. The following is a list of the FCI publications:

FCI 68-1 78	Solenoid Valves for Gas Service
FCI 68-2 78	A Procedure in Rating Flow and Pressure Characteristics of Solenoid Valves for Liquid Service
FCI 69-1 89	Pressure Rating Standard for Steam Traps (R 1994)
FCI 70-2 91	Quality Control Standard for Control Valve Seat Leakage
FCI 73-1 95	Pressure Rating Standard for "Y" Type Strainers
FCI 74-1 90	Spring-Loaded Lift Disc Check Valve
FCI 75-1 79	Characteristics of Solenoid Valves (R 1991)
FCI 78-1 78	Pressure Rating Standard for Pipeline Strainer Other Than "Y" Type
FCI 79-1 86	Proof of Pressure Ratings for Pressure Reducing Regulators (R 1993)
FCI 81-1 85	Proof of Pressure Ratings for Temperature Regulators (R 1993)
FCI 82-1 85	Recommended Methods for Testing and Classifying the Water Hammer Characteristics of Electrically Operated Valves (R 1991)
FCI 84-1	Metric Definition of the Valve Flow Coefficient Cv
FCI 85-1 89	Production Testing for Steam Traps (R 1994)
FCI 86-1 93	Standard Solenoid Valve Terminology and Nomenclature
FCI 87-1 93	Classification and Operating Principles of Steam Traps
FCI 87-2 90	Power Signal Standard for Spring-Diaphragm Actuated Control Valves
FCI 87-2	Control Valves (R 1994)
FCI 89-1 92	Guide for Selection, Installation and Maintenance of Pipeline Strainers
FCI 91-1 94	Standard for Qualification of Control Valve Stern Seals to Most EPA Emission Guidelines for Volatile Organic Compounds

FACTORY MUTUAL ENGINEERING & RESEARCH CORPORATION

The Factory Mutual Engineering & Research Corporation is usually referred to as Factory Mutual (FM). FM performs examinations of equipment, materials, and services before listing them as ‘‘approved’’ in the guide *Approval Guide to Equipment, Materials and Services*. The following publications of FM may be of interest to people involved with fire protection systems piping:

Approval Guide to Equipment, Materials and Services
Automatic Sprinkler Systems
Fixed Extinguishing Systems
Oil Safety Shutoff Valves
Gas Safety Shutoff Valves
Supplemental Data
Property Loss Control Catalog

FLUID SEALING ASSOCIATION

The Fluid Sealing Association publishes various documents related to gaskets and seals used in mechanical joints to maintain leak-tightness of the fluid piping and ducting systems. These documents include the following:

Ducting Systems Technical Handbook
Nonmetallic Gasket Handbook
Compression Packings Handbook
Molded Packings Handbook
Rubber Expansion Joints/Flexible Pipe Connectors
Mechanical Seal Handbook
Glossary of Terms

HEAT EXCHANGE INSTITUTE

The Heat Exchange Institute (HEI) publishes voluntary standards developed to express the consensus of member companies concerned with the fabrication of heat exchangers and similar equipment. The following are typical of the standards published by this institute:

HE14	Method and Procedure for the Determination of Dissolved Oxygen
HE15	Standards for Closed Feedwater Heaters
HE17	Standards for Direct Contact Barometric and Low Level Condensers

HE18	Standard for Power Plant Heat Exchangers
HE18A	Standards for Steam Jet Vacuum Systems
HEI10	Standards for Steam Surface Condensers, 8th Edition

HYDRAULIC INSTITUTE

The following is the list of the Hydraulic Institute (HI) publications:

Hydraulic Institute Standards, 1994 Edition

ANSI/HI 1.1-1.5	Centrifugal Pumps
ANSI/HI 1.6	Centrifugal Pump Test
ANSI/HI 5.1-5.6	Sealless Centrifugal Pumps
ANSI/HI 2.1-2.5	Vertical Pumps
ANSI/HI 2.6	Vertical Pump Test
ANSI/HI 3.1-3.5	Rotary Pumps
ANSI/HI 3.6	Rotary Pump Test
ANSI/HI 4.1-4.6	Sealless Rotary Pumps
ANSI/HI 6.1-6.5	Reciprocating Power Pumps
ANSI/HI 6.6	Reciprocating Pump Test
ANSI/HI 7.1-7.5	Controlled Volume Pumps
ANSI/HI 8.1-8.5	Direct Acting (Steam) Pumps
ANSI/HI 9.1-9.5	Pumps General Guidelines

Engineering Data Book, 2nd Edition (1990)

The information previously contained in the *Pipe Friction Manual* has been incorporated into the *Engineering Data Book;* the *Pipe Friction Manual* is no longer available.

INSTITUTE OF ELECTRICAL AND ELECTRONICS ENGINEERS

The following standards published by the Institute of Electrical and Electronics Engineers (IEEE) are of interest to those involved in the design and construction of nuclear power plant piping systems:

IEEE 323-83	Standard for Qualifying Class 1E Equipment for Nuclear Power Generating Stations

IEEE 336-85	Standard Installation, Inspection, and Testing Requirements for Power, Instrumentation, and Control Equipment at Nuclear Facilities
IEEE 344-87	Recommended Practice for Seismic Qualification of Class IE Equipment for Nuclear Power Generating Stations
IEEE 352-87	Guide for General Principles of Reliability Analysis of Nuclear Power Generating Station Safety Systems
IEEE 379-94	Standard Application of the Single Failure Criterion to Nuclear Power Generating Station Safety Systems
IEEE 382-96	Standard for Qualification of Actuators for Power Operated Valve Assemblies with Safety-Related Functions for Nuclear Power Plants

INSTRUMENT SOCIETY OF AMERICA

The Instrument Society of America (ISA) develops and publishes periodicals, books, standards, recommended practices, monographs, references, and training aids pertaining to instruments and automated controls. The following publications of the ISA contain information related to piping:

Recommended Practices (RP)

RP 16.5-61	Recommended Practice for Installation, Operation, Maintenance Instructions for Glass Tube Variable Area Meters (Rotometers)
RP 31.1-77	Recommended Practice for Specification, Installation, and Calibration of Turbine Flowmeters
RP 42.1-92	Recommended Practice for Nomenclature for Instrument Tube Fittings
RP 60.9-81	Recommended Practice for Piping Guide for Control Centers
RP 75.18-89	Recommended Practice for Control Valve Position Stability
RP 75.21-89	Recommended Practice for Process Data Presentation for Control Valves
RP 75.23-95	Considerations for Evaluating Control Valve Cavitation

Standards

S 5.1-84	Instrumentation Symbols and Identification

S 5.2-76	Binary Logic Diagrams for Process Operations
S 5.3-83	Graphic Symbols for Distributed Control/Shared Display Instrumentation, Logic, and Computer
S 5.4-91	Standard Instrument Loop Diagrams
S 5.5-85	Graphic Symbols for Process Displays
S 7.0.01	Quality Standard for Instrument Air
S 12.4-70	Instrument Purging for Reduction of Hazardous Area Classification
S 18.1-79	Annunciator Sequences and Specifications (R 1985)
S 20-81	Specification Forms for Process Measurement and Control Instruments, Primary Elements, and Control Valves
S 26-68	Dynamic Response Testing of Process Control Instrumentation
S 37.3-75	Strain Gauge Pressure Transducers, Specifications, and Tests (R 1982)
S 37.5-75	Strain Gauge Linear Acceleration Transducers, Specifications, and Tests (R 1982)
S 37.6-76	Specifications and Tests of Potentiometric Pressure Transducers (R 1982)
S 37.8-77	Specifications and Tests for Strain Gauge Force Transducers (R 1982)
S 51.1-79	Process Instrumentation Terminology
S 67.01-94	Transducer and Transmitter Installation for Nuclear Safety Applications
S 67.02.01-96	Nuclear - Safety - Related Instrument Sensing Line Piping and Tubing Standards for Use in Nuclear Power Plants
S 67.03-82	Light Water Reactor Coolant Pressure Boundary Leak Detection
S 67.04-94	Setpoints for Nuclear Safety-Related Instrumentation
S 67.10-94	Sample-Line Piping and Tubing Standard for Use in Nuclear Power Plants
S 75.01-85	Flow Equations for Sizing Control Valves
S 75.02-96	Control Valve Capacity Test Procedure
S 75.03-92	Face-to-Face Dimensions for Integral Flanged Globe-Style Control Valve Bodies (ANSI Classes 125, 150, 250, 300, and 600)

S 75.04-95	Face-to-Face Dimensions for Flangeless Control Valves (ANSI Classes 150, 300, and 600)
S 75.05-83	Control Valve Terminology
S 75.07-87	Laboratory Measurement of Aerodynamic Noise Generated by Control Valves
S 75.08-85	Installed Face-to-Face Dimensions for Flanged Clamp or Pinch Valves
S 75.11-85	Inherent Flow Characteristic and Rangeability of Control Valves
S 75.12-93	Face-to-Face Dimensions for Socket Weld-End and Screwed-End Globe-Style Control Valves (ANSI Classes 150, 300, 600, 900, 1500, and 2500)
S 75.14-93	Face-to-Face Dimensions for Butt-Weld-End Globe Style Control Valves (ANSI Classes 4500)
S 75.15-94	Face-to-Face Dimensions for Butt-Weld-End Globe-Style Control Valves (ANSI Classes 150, 300, 600, 900, 1500, and 2500)
S 75.17-89	Control Valve Aerodynamic Noise Prediction Standard
S 75.19-95	Hydrostatic Testing of Control Valves (Formerly ASME/ANSI B16.37-80)
ISA MC96.1	Temperature Measurement Thermocouples (1982)
ISA RP2.1	Manometer Tables (1985)
ISA RP12.4	Pressurized Enclosures (1996)
ISA RP75.23	Considerations for Evaluating Control Valve Cavitation
ISA S75.16	Face-to-Face Dimensions for Flanged Globe-Style Control Valve Bodies (ANSI Classes 900, 1500, and 2500) (1994)
ISA S75.20	Face-to-Face Dimensions for Separable Flanged Globe-Style Control Valves (ANSI Classes 150, 300, and 600) (1991)
ISA S75.22	Face-to-Centerline Dimensions for Flanged Globe-Style Angle Control Valve Bodies (ANSI Classes 150, 300, and 600) (1992)
ISA S77.70	Fossil Fuel Power Plant Instrument Piping Installation (1995)

ISA S84.01	Application of Safety Instrumented Systems for the Process Industries (1996)
ISA DIRECT	Directory of Instrumentation, 1992

Handbook

ISA Handbook of Control Valves

MANUFACTURERS STANDARDIZATION SOCIETY OF THE VALVE AND FITTINGS INDUSTRY

The Manufacturers Standardization Society (MSS) publishes Standard Practices (SP) which provide a basis for common practice by the manufacturers, the user, and the general public. Compliance to the Standard Practices of MSS is required by reference in a code, specification, sales contract, law, or regulation. The MSS is also represented on the committees of other standardization groups, such as ANSI and ASME. Many of the ASME B16 series standards were originally developed as MSS Standard Practices. Once a Standard Practice is adopted as ANSI standard, it is discontinued as an MSS Standard Practice.

The following is a complete list of MSS Standard Practices published and in current use:

Standard Practices (SP)

SP-6-96	Standard Finishes for Contact Faces of Pipe Flanges and Connecting-End Flanges of Valves and Fittings
SP-9-97	Spot Facing for Bronze, Iron, and Steel Flanges
SP-25-93	Standard Marking System for Valves, Fittings, Flanges, and Unions
SP-42-90	Class 150 Corrosion Resistant Gate, Globe, Angle, and Check Valves with Flanged and Butt-Weld Ends
SP-43-91	Wrought Stainless Steel Butt-Welding Fittings, Including Reference to Other Corrosion Resistant Materials
SP-44-96	Steel Pipe Line Flanges (superseded by ASME B16.47)
SP-45-92	Bypass and Drain Connection Standard
SP-51-91	Class 15OLW Corrosion Resistant Cast Flanges and Flanged Fittings
SP-53-95	Quality Standard for Steel Castings and Forgings for Valves, Flanges, and Fittings and Other Piping Components

	Magnetic Particle Examination Method
SP-54-95	Quality Standard for Steel Casting for Valves, Flanges, and Fittings and Other Piping Components, Radiographic Examination Method (R 1990)
SP-55-96	Quality Standard for Steel Castings for Valves, Flanges, and Fittings and Other Piping Components, Visual Method for Evaluation of Irregularities
SP-58-93	Pipe Hangers and Supports—Materials, Design, and Manufacture
SP-60-91	Connecting Flange Joint Between Tapping Sleeves and Tapping Valves (R 1986)
SP-61-92	Pressure Testing of Steel Valves
SP-65-94	High Pressure Chemical Industry Flanges and Threaded Stubs for Use with Lens Gaskets
SP-67-95	Butterfly Valves
SP-68-97	High Pressure-Offset Seat Butterfly Valves with Offset Design
SP-69-96	Pipe Hangers and Supports—Selection and Application
SP-70-90	Cast Iron Gate Valves, Flanged, and Threaded Ends
SP-71-97	Cast Iron Swing Check Valves, Flanged and Threaded Ends
SP-72-92	Ball Valves with Flanged or Butt-Welding Ends for General Service
SP-73-91	Brazing Joints for Wrought and Cast Copper Alloy Solder Joint Pressure Fittings
SP-75-93	Specification for High Test Wrought Butt-Welding Fittings
SP-77-95	Guidelines for Pipe Support Contractual Relationships and Responsibilities of the Pipe Hanger Contractor with the Purchaser's Engineer or the Pipe Fabricator and/or Erector
SP-78-87	Cast Iron Plug Valves, Flanged and Threaded Ends
SP-79-92	Socket-Welding Reducer Inserts
SP-80-97	Bronze Gate, Globe, Angle, and Check Valves

SP-81-95	Stainless Steel, Bonnetless Flanged Knife Gate Valves
SP-82-92	Valve Pressure Testing Methods
SP-83-95	Class 3000 Steel Pipe Unions Socket-Welding and Threaded
SP-85-94	Cast Iron Globe and Angle Valves Flanged and Threaded Ends
SP-86-97	Guidelines for Metric Data in Standards for Valves, Flanges, Fittings, and Actuators
SP-87-91	Factory-Made Butt-Welding Fittings for Class 1 Nuclear Piping Applications (R 1986)
SP-88-93	Diaphragm Type Valves (R 1988)
SP-89-98	Pipe Hangers and Supports—Fabrication and Installation Practices
SP-90-86	Guidelines on Terminology for Pipe Hangers and Supports
SP-91-92	Guidelines for Manual Operation of Valves
SP-92-87	Valve User Guide
SP-93-87	Quality Standard for Steel Castings and Forgings for Valves, Flanges, and Fittings and Other Piping Components Liquid Penetrant Examination Method
SP-94-92	Quality Standard for Ferritic and Martensitic Steel Castings for Valves, Flanges, and Fittings, and Other Piping Components Ultrasonic Examination Method (R 1987)
SP-95-86	Swage(d) Nipples and Bull Plugs
SP-96-96	Guidelines on Terminology for Valves and Fittings
SP-97-95	Forged Carbon Steel Branch Outlet Fittings—Socket Welding, Threaded, and Butt-Welding Ends
SP-98-96	Protective Epoxy Coatings for the Interior of Valves and Hydrants
SP-99-94	Instrument Valves
SP-100-97	Qualification Requirements for Elastomer Diaphragms for Nuclear Service Diaphragm Type Valves
SP-101-89	Part-Turn Valve Actuator Attachment Flange and Driving Component Dimensions and Performance Characteristics

SP-102-89	Multi-Turn Valve Actuator Attachment Flange and Driving Component Dimensions and Performance Characteristics
SP-103-95	Wrought Copper and Copper Alloy Insert Fittings for Polybutylene Systems
SP-104-95	Wrought Copper Solder Joint Pressure Fittings
MS SP-105	Instrument Valves for Code Applications (Jan. 1, 1996)
MSS SP-106	Cast Copper Alloy Flanges and Flanged Fittings Class 125, 150 and 300 (Jan. 1, 1990)
MSS SP-107	Transition Union Fittings for Joining Metal and Plastic Products (Jan. 1, 1991)
MSS SP-108	Resilient-Seated Cast Iron-Eccentric Plug Valves (Jan. 1, 1996)
MSS SP-109	Welded Fabricated Copper Solder Joint Pressure Fittings (Jan. 1, 1997)
MSS SP-110	Ball Valves Threaded, Socket-Welding, Solder Joint, Grooved and Flared Ends (Jan. 1, 1996)
MSS SP-111	Gray-Iron and Ductile-Iron Tapping Sleeves (Jan. 1, 1996)
MSS SP-112	Quality Standard for Evaluation of Cast Surface Finishes Visual and Tactile Method (Jan. 1, 1993)
MSS SP-113	Standard Practice for Connecting Joint Between Tapping Machines and Tapping Valves (Jan. 1, 1994)
MSS SP-114	Corrosion Resistant Pipe Fittings Threaded and Socket Welding Class 150 and 1000 (Jan. 1, 1995)
MSS SP-115	Excess Flow Valves for Natural Gas Service (Jan. 1, 1995)
MSS SP-116	Service Line Valves and Fittings for Drinking Water Systems (Jan. 1, 1996)
MSS SP-117	Bellows Seals for Globe and Gate Valves (Jan. 1, 1996)
MSS SP-118	Compact Steel Globe and Check Valves Flanges, Flangeless, Threaded and Welding Ends (Chemical and Petroleum Refinery Service) (Jan. 1, 1996)
MSS SP-119	Belled End Socket Welding Fittings, Stainless Steel and Copper Nickel (Nov. 1, 1996)

MSS SP-120	Flexible Graphite Packing System or Rising Stern Steel Valves (Design Requirements) (March 1, 1997)
MSS SP-121	Qualification Testing Methods for Stem Packing for Rising Stem Steel Valves (March 1, 1997)
MSS SP-122	Plastic Industrial Ball Valves (Jan. 1, 1997)

NATIONAL FIRE PROTECTION ASSOCIATION

The National Fire Protection Association (NFPA) is a voluntary association of members representing all aspects of fire protection, such as professional societies, educational institutions, public officials, insurance companies, equipment manufacturers, builders and contractors, and transportation groups. The NFPA publishes codes, standards, guides, and recommended practices in a 12-volume set of books called the *National Fire Codes*. Conformance to the *National Fire Codes* may be required by federal, state, and local laws and regulations. Sometimes insurance companies may leave no choice for the owner/user of the facility but to comply with the fire protection and prevention requirements of the applicable National Fire Codes.

Volumes 1 through 8 contain actual text of the National Fire Codes and Standards. The requirements contained in these volumes have been judged suitable for legal adoption and enforcement. Volumes 9 through 11 contain recommended practices and guides considered to be good engineering practices. Volume 12 contains formal interpretations, tentative interim amendments, and errata that relate to the documents in Volumes 1 through 11.

Here is a list of NFPA publications. For specific NFPA Codes and Standards related to fire protection systems piping, refer to Chapter C2, Part C of this handbook.

National Fire Protection Association Publications

Technical Committee Documentation and Reports
Automatic Sprinkler Systems Handbook, Sixth Edition
Automatic Sprinkler and Standpipe Systems, Second Edition
Flammable and Combustible Liquids Code Handbook, Fifth Edition
Fire Litigation Handbook
SFPE Handbook of Fire Protection Engineering, First Edition
Fire Protection Guide to Hazardous Materials, Eleventh Edition
Fire Protection Handbook, Seventeenth Edition
Liquefied Petroleum Gases Handbook, Third Edition
Life Safety Code Handbook, Sixth Edition
National Electrical Code Handbook, Seventh Edition
National Fuel Gas Code Handbook, Second Edition

National Fire Codes and Standards, Volumes 1 through 12
Formal Interpretations, Volume 13

PIPE FABRICATION INSTITUTE

The Pipe Fabrication Institute (PFI) publishes advisory Engineering Standards (ES) and Technical Bulletins (TB) intended to serve the needs of the pipe-fabricating industry at the design level and in actual shop operations. The PFI standards contain minimum requirements; however, the designer or fabricator may consider specifying additional requirements beyond the scope of PFI publications. The use of PFI standards or bulletins is voluntary. A complete listing of PFI publications follows:

Engineering Standards (ES)

ES-1-92	Internal Machining and Solid Machined Backing Rings for Circumferential Butt Welds
ES-2-92	Method of Dimensioning Piping Assemblies
ES-3-81	Fabricating Tolerances (R 1990)
ES-4-85	Hydrostatic Testing of Fabricated Piping (R 1988)
ES-5-93	Cleaning of Fabricated Piping
ES-7-94	Minimum Length and Spacing for Welded Nozzles
ES-11-75	Permanent Marking on Piping Materials (R 1990)
ES-16-85	Access Holes, Bosses, and Plugs for Radiographic Inspection of Pipe Welds (R 1988)
ES-20-97	Wall Thickness Measurement by Ultrasonic Examination
ES-21-92	Internal Machining and Fit-Up of GTAW Root Pass Circumferential Butt Welds (R 1989)
ES-22-95	Recommended Practice for Color Coding of Piping Materials
ES-24-92	Pipe Bending Methods, Tolerances, Process, and Material Requirements
ES-25-93	Random Radiography of Pressure Retaining Girth Butt Welds
ES-26-93	Welded Load Bearing Attachments to Pressure Retaining Piping Materials
ES-27-94	“Visual Examination”—The Purpose, Meaning, and Limitation of the Term
ES-29-93	Abrasive Blast Cleaning of Ferritic Piping Materials

ES-30-86	Random Ultrasonic Examination of Butt Welds (R 1989)
ES-31-92	Standard for Protection of Ends of Fabricated Piping Assemblies
ES-32-93	Tool Calibration
ES-34-92	Painting of Fabricated Piping (R 1989)
ES-35-93	Nonsymmetrical Bevels and Joint Configurations for Butt Welds
ES-36-95	Branch Reinforcement Work Sheets
PFI ES-37	Loading and Shipping of Piping Assemblies (March 1, 1997)
PFI ES-39	Fabricated Tolerances for Grooved Piping Systems (Feb. 1, 1994)
PFI ES-40	Method of Dimensioning Grooved Piping Assemblies (Feb. 1, 1994)
PFI ES-41	Material Control and Traceability of Piping Components (Jan. 1, 1995)
PFI ES-42	Positive Material Identification of Piping Components Using Portable X-Ray Emission Type Test Equipment (Jan. 1, 1996)
PFI ES-44	Drafting Practices Standard (March 1, 1997)

Technical Bulletins (TB)

TB1-94	Pressure-Temperature Ratings of Seamless Pipe Used in Power Plant Piping Systems
TB3-93	Guidelines Clarifying Relationships and Design Engineering Responsibilities Between Purchasers' Engineers and Pipe Fabricator or Pipe Fabricator Erector (R 1988)
TB7-97	Guideline for Fabrication and Installation of Stainless Steel High Priority Distribution Systems

PLASTICS PIPE INSTITUTE

Those interested in the application of plastics piping systems may find the following Plastics Pipe Institute (PPI) publications of help:

PPI Handbook of Polyethylene Piping
Engineering Basics of Plastics Piping
Plastic Piping Manual

In addition, the PPI publishes technical reports (TR), technical notes (TN), recommendations (REC), statements (STA), and model specifications (MS) dealing with plastics piping.

Technical Reports (TR)

PPI TR2/6	Policies and Procedures for the Listing of Thermoplastic Pipe, Fittings and Fixture Materials when Evaluated under Constant Internal Pressure with Flow (ASTM F 948) (1987)
PPI TR-3	Policies and Procedures for Developing Recommended Hydrostatic Design Stresses for Thermoplastic Pipe Materials; Addendum—1992 (1992)
PPI TR-4	Recommended Hydrostatic Strengths and Design Stresses for Thermoplastic Pipe and Fittings Compounds; Correction Notice (1994)
PPI TR-5	Standards for Plastics Piping (1990)
PPI TR-7	Recommended Method for Calculation of Nominal Weight of Plastic Pipe (1988)
PPI TR-9	Recommended Design Factors for Pressure Applications of Thermoplastic Pipe Materials (1992)
PPI TR-11	Resistance of Thermoplastic Piping Materials to Micro- and Macro-Biological Attack (1989)
PPI TR13	Poly (Vinyl Chloride) (PVC) Plastic Piping Design and Installation (1973)
PPI TR14	Water Flow Characteristics of Thermoplastic Pipe (1992)
PPI TR18	Weatherability of Thermoplastic Piping (1973)
PPI TR19	Thermoplastics Piping for the Transport of Chemicals; Errata (1991)
PPI TR20	Joining Polyolefin Pipe (1973)
PPI TR21	Thermal Expansion and Contraction of Plastic Pipe; Errata (1974)
PPI TR-22	Polyethylene Plastic Piping Distribution Systems for Components of Liquid Petroleum Gases; Revision—1991 (1988)
PPI TR-30	Thermoplastic Fuel Gas Piping Investigation of Maximum Temperatures At-

	tained by Plastics Pipe Inside Service Risers (1988)
PPI TR-31	Underground Installation of Polyolefin Piping (1988)
PPI TR-32	Recommended Minimum In-Plant Quality Control Program for Production of Polyethylene Gas Distribution Piping Systems (1989)
PPI TR8	Installation Procedures for Polyethylene (PE) Plastic Pipe (1984)

Technical Notices (TN)

PPI TN-15	Resistance of Polyethylene Pipe to a Sanitary Sewage Environment (1992)
PPI TN-16	Rate Process Method for Evaluating Performance of Polyethylene Pipe (1992)
PPI TN2	Sealants for Polyvinyl Chloride (PVC) Plastic Piping (1970)
PPI TN8/8	Making Threaded Joints with Thermoplastic Pipe and Fittings (1973)
PPI TN12/3	Coefficients of Thermal Expansion Thermoplastic Piping Materials (1977)
PPI REC.A	Limiting Water Velocities in Thermoplastic Piping Systems (1971)
PPI REC.B	Thermoplastic Piping for the Transport of Compressed Air or Other Compressed Gases (1989)
PPI REC.C	Pressure Rating of PVC Plastic Piping for Water at Elevated Temperatures (1973)
PPI STA.L	Thermoplastic Piping in Fire Sprinkler Systems
PPI STA.H	Noise in Piping Systems (1988)
PPI.STA.N	Pipe Permeation (R 1990) (1984)
PPI STA.R	Technical Considerations When Using Polyethylene (PE) (1992)
PPI STA.S	Caution Statement on Heat Fusion Methods of Polyethylene Pipe and/or Fittings of Similar Colors (1991)
PPI MS-2	Model Specification for Polyethylene Plastic Pipe Tubing and Fittings for Natural Gas Distribution (1990)

STEEL STRUCTURES PAINTING COUNCIL

The Steel Structures Painting Council (SSPC) publishes specifications, which include surface preparation (SP), pretreatment (PT), paint application (PA), and paint and paint systems (PS). These specifications identify practical and economical methods of surface preparation and painting steel structures. They are used to clean and paint piping and other steel equipment. With the exception of paint and paint system specifications, the following are the commonly used SSPC specifications:

Surface Preparation (SP) Specifications

SSPC-Vis I-89	Pictorial Surface Preparation Standard for Painting Steel Surfaces
SSPC-Vis 2-82	Standard Method of Evaluating Degree of Rusting on Painted Steel Surfaces
SSPC-SP 1-82	Solvent Cleaning
SSPC-SP 2-95	Hand Tool Cleaning
SSPC-SP 3-95	Power Tool Cleaning
SSPC-SP 5-94	White Metal Blast Cleaning
SSPC-SP 6-94	Commercial Blast Cleaning
SSPC-SP 7-94	Brush-Off Blast Cleaning
SSPC-SP 8-91	Pickling
SSPC-SP 10-94	Near-White Blast Cleaning
SSPC-SP 11-95	Power Tool Cleaning and Base Metal

Pretreatment Specifications (PT)

SSPC-PT 1	Wetting Oil Treatment
SSPC-PT 2	Cold Phosphate Surface Treatment
SSPC-PT 3	Basic Zinc Chromate-Vinyl Butyral Washcoat
SSPC-PT 4	Hot Phosphate Surface Treatment

Paint Application (PA) Guides

SSPC-PA I-91	Shop, Field, and Maintenance Painting
SSPC-PA 2-91	Measurement of Dry Paint Thickness with Magnetic Gauges

TUBULAR EXCHANGER MANUFACTURERS ASSOCIATION

The Tabular Exchanger Manufacturers Association (TEMA) publishes standards for use by manufacturers and users. The following is a list of some Heat Exchange Institute (HEI) publications that may be of interest:

HEI 8	Standards for Power Plant Heat Exchangers, Second Edition
HEI 8A	Standards for Steam Jet Vacuum Systems, Fourth Edition
HEI 10	Standards for Steam Surface Condensers, Eighth Edition
HEI 10A	Standards for Steam Surface Condensers Addendum, Eighth Edition
HEI TSD	Standards and Typical Specifications for Deaerators, Fifth Edition

UNDERWRITERS LABORATORIES

The UL is a nonprofit organization that develops specifications and standards directed toward assuring the safety of materials, products, and equipment when used in accordance with the conditions for which they were designed. It also tests items for conformance to these and other nationally recognized standards and publishes lists of items approved as a result of the tests. The NFPA codes require that items to be used in fire protection and prevention systems be approved and listed. The UL-published *UL Fire Protection Equipment List* (such as a listing of fire-loop piping material and equipment manufacturers) is one of the publications normally used by those involved in piping associated with fire protection systems.

FOREIGN CODES AND STANDARDS

The basic principles of piping design and construction may not differ much from one country to another, but the requirements of country-specific codes and standards may vary substantially. Therefore, the personnel involved in the engineering design, construction, operation, and maintenance of piping systems must ensure that the requirements of applicable codes and standards are complied with to ensure the safety of the general public and workers associated with the facility.

The user is advised to verify the latest applicable version/edition of the code and/or standard before invoking their requirements for any application.
Appendix E10 provides a listing of British, DIN, Japanese, and ISO codes, standards, and specifications related to piping.

BRITISH STANDARDS AND SPECIFICATIONS

Pipe, Tube, and Fittings

Appendix E10, Table E10.B1 lists British standards and specifications for pipe, tube, and fittings.

Flanges, Bolts, Nuts, and Gaskets

Appendix E10, Table E10.B2 lists British standards and specifications for flanges, bolts, nuts, and gaskets.

Valves

Appendix E10, Table E10.B3 lists British standards and specifications for valves.

DIN STANDARDS AND SPECIFICATIONS

Pipe, Tube, and Fittings

Appendix E10, Table E10.D1 lists DIN standards and specifications for pipe, tube, and fittings.

Flanges, Bolts, Nuts, and Gaskets

Appendix E10, Table E10.D2 lists DIN standards and specifications for flanges, bolts, nuts, and gaskets.

Valves

Appendix E10, Table E10.D3 lists DIN standards and specifications for valves.

JAPANESE STANDARDS AND SPECIFICATIONS

Pipe, Tube, and Fittings

Appendix E10, Table E10.J1 lists Japanese standards and specifications for pipe, tube, and fittings.

Flanges, Bolts, Nuts, and Gaskets

Appendix E10, Table E10.J2 lists Japanese standards and specifications for flanges, bolts, nuts, and gaskets.

Valves

Appendix E10, Table E10.J3 lists Japanese standards and specifications for valves.

ISO STANDARDS AND SPECIFICATIONS

Pipe, Tube, and Fittings

Appendix E10, Table E10.I1 lists ISO standards and specifications for pipe, tube and fittings.

Flanges, Bolts, Nuts, and Gaskets

Appendix E10, Table E10.I2 lists ISO standards and specifications for flanges, bolts, nuts, and gaskets.

Valves

Appendix E10, Table E10.I3 lists ISO standards and specifications for valves.

Other chapters include reference to other international or foreign standards and specifications relevant to the piping and related components.

REFERENCES

1. *ASME Boiler and Pressure Vessel Code,* Section 1, Power Boilers, 1998 Edition, American Society of Mechanical Engineers, New York.
2. *ASME Boiler and Pressure Vessel Code,* Section II, Material Specifications, 1998 Edition, American Society of Mechanical Engineers, New York.
3. *ASME Boiler and Pressure Vessel Code,* Section III, Division 1, Nuclear Power Plant Components, 1998 Edition, American Society of Mechanical Engineers, New York.
4. Code of Federal Regulations, Title 10, Part 50, Section 50.55a, Codes and Standards, January 1, 1998, Office of the Federal Register, National Archives and Records Administration, Washington, D.C.
5. *ASME Boiler and Pressure Vessel Code,* Section V, Nondestructive Examination, 1998 Edition, American Society of Mechanical Engineers, New York.
6. *ASME Boiler and Pressure Vessel Code,* Section VIII, Pressure Vessels, 1998 Edition, American Society of Mechanical Engineers, New York.
7. *ASME B31, Code for Pressure Piping,* Section B31.1, Power Piping, 1998 Edition, American Society of Mechanical Engineers, New York.
8. *ASME Boiler and Pressure Vessel Code,* Section IX, Welding and Brazing Qualifications, 1998 Addendum, American Society of Mechanical Engineers, New York.
9. *ASME Boiler and Pressure Vessel Code,* Section XI, Rules for Inservice Inspection of Nuclear Power Plant Components, 1998 Edition, American Society of Mechanical Engineers, New York.
10. *ASME B31, Code for Pressure Piping,* Section B31.9, Building Services Piping, 1996 Edition, American Society of Mechanical Engineers, New York.
11. *ASME B31, Code for Pressure Piping,* Section B31.3, Process Piping, 1996 Edition, American Society of Mechanical Engineers, New York.
12. *ASME B31, Code for Pressure Piping,* Section B31.4, Liquid Transportation Systems for Hydrocarbons, Liquid Petroleum Gas, Anhydrous Ammonia, and Alcohol, 1992 Edition with Addenda B31.1A-1994, American Society of Mechanical Engineers, New York.

13. *ASME B31, Code for Pressure Piping,* Section B31.5, Refrigeration Piping, 1992 Edition with Addenda B31.5A-1994, American Society of Mechanical Engineers, New York.
14. *ASME B31, Code for Pressure Piping,* Section B31.8, Gas Transmission and Distribution Piping Systems, 1995 Edition, American Society of Mechanical Engineers, New York.
15. *ASME B31, Code for Pressure Piping,* Section B31.11, Slurry Transportation Piping Systems, 1989 Edition, American Society of Mechanical Engineers, New York.
16. USAS B31.2, *Fuel Gas Piping,* 1968 Edition, American Society of Mechanical Engineers, New York.

CHAPTER A5

MANUFACTURING OF METALLIC PIPE

Alfred Lohmeier
Materials Engineer
(Formerly Vice President—Technical)
Sumitomo Corporation of America
New York, New York

Daniel R. Avery
Technical Marketing Manager
Wyman-Gordan Forgings, Inc.
Houston, Texas

DEVELOPMENT OF COMMERCIAL PIPE-MAKING

There have been increasing societal demands for modern structures and facilities and concomitant increased emphasis on safety and reliability of equipment under all operating conditions. Piping manufacturing processes have been developed to provide the quality and reliability commensurate with these demands, together with economically feasible production methods. To meet the more stringent reliability goals, the quality control of the piping manufacturing process from the production of the raw material to the finished product is of significant importance. Driving the need for process quality improvement are the social and economic consequences of equipment failure in critical applications such as power generation, chemical and petroleum production, and transportation.

This chapter considers the methods by which different types of metallic pipe are produced. It also considers the various steel-making processes which are important to the ultimate quality of the manufactured pipe. For a discussion of pipes made of thermoplastic and fiberglass, refer to Part D of this handbook.

Historical Background

The history of pipe manufacturing goes back to the use of hollow wooden logs to provide water for medieval cities. The use of cast-iron pipes in England and France became prevalent in the early nineteenth century. The first major cast-iron water pipeline for Philadelphia was obtained in 1817 and for New York in 1832. Distribution of gas for gaslights was initiated in England, using sheet iron drawn through a die to a cylindrical shape and with the edges welded together. In 1887 the first pipe was made of Bethlehem steel in the United States.

Seamless pipe manufacture was attempted in the mid–nineteenth century by various means; the Mannesmann process was developed in Germany in 1885 and operated commercially in England in 1887. The first seamless pipe mill in the United States was built in 1895.

In the early twentieth century, seamless tubes gained wide acceptance as the Industrial Revolution proceeded with automobiles, oil refineries, oil pipelines, oil wells, and fossil power generation boilers. At that time, the welded tube had not achieved the reliability of present-day electric resistance welded tubes.

The development of pipe and tube production methods, together with the development of steel alloys capable of withstanding the demanding environmental conditions of temperature, chemistry, pressure, and cyclic thermal and pressure load application have enabled pipe and tube to be used reliably in the most critical applications, ranging from Alaskan pipelines to nuclear power generation plants.

World Tubular Product Production Capability

World production and consumption of iron and steel tubular products makes up almost 14 percent of the worldwide crude steel conversion. World production of steel tubular products is continuously increasing to meet the demands of worldwide industrialization and growing population. The production of iron and steel tubular products vary depending on a wide range of worldwide economic factors such as oil exploration, power generation plant construction, and automotive production. For example, in economic climates where oil prices are low, there is less incentive to drill new oil wells. Consequently, the production of steel pipe for oil drilling casings would be reduced. Similar examples of steel pipe production as a function of economic climate can be seen in the power generation and automotive industries. Total world production of pipe is an integration of the effects of the local national economic climates throughout the world.

FERROUS PIPE-MAKING PROCESSES

Iron-Making

The making of steel for ferritic piping begins with the smelting of iron ore found in deposits in the crust of the earth throughout the world in forms such as hematite and magnetite. In preparation for the smelting process, the iron ore may be treated by any of several methods to convert it into a suitable form for introduction into the blast furnaces. One method is sintering, which converts ores into a porous mass called clinkers. Another is smelting, which is performed in a blast furnace. The process involves the chemical reaction of iron ore with limestone, coke, and air under heat, reducing the iron ore to iron. The ‘‘pig’’ iron obtained from the blast furnace is used as the basic component in the steel-making process.

Steel-Making

Steel for piping can be produced in several ways (Fig. A5.1), depending on the facilities available and the desired characteristic of the steel. Generally, steel requires the removal of carbon from the pig iron to a degree required by the carbon steel properties desired. Alloy steel also requires the addition of alloying elements such as chromium, nickel, manganese, and molybdenum to provide the special properties associated with the alloying element.

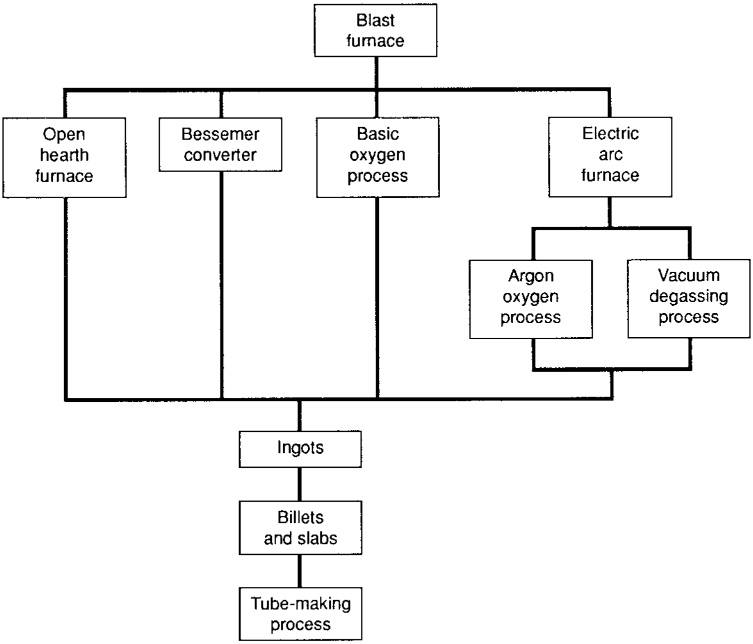
Blast furnace
Open hearth furnace
Bessemer converter
Basic oxygen process
Electric arc furnace
Argon oxygen process
Vacuum degassing process
Ingots
Billets and slabs
Tube-making process

FIGURE A5.1 Piping steel-making processes.

Bessemer Converter. The Bessemer method of making steel (due to Sir Henry Bessemer in 1856) consisted of blowing a current of cold air through the molten pig iron, thereby using the oxygen in the air to burn carbon and other impurities from the melt. After burning out the carbon in the pig iron, the exact amount of carbon required for the steel is reintroduced into the heat.

Basic Oxygen Process. The basic oxygen process (BOP) is essentially the same as the Bessemer process except that it uses pure oxygen (instead of air) together with burned lime converted from limestone. This process burns out the impurities more quickly and completely and provides for more precise control of the steel chemistry.

Open-Hearth Furnace. The open-hearth furnace is used to produce much of the steel in the United States; however, it is being superseded by the basic oxygen process. Its significant advantage is the ability to use scrap steel as well as pig iron as ferrous stock in producing steel. The open-hearth furnace is a large rectangular brick floor, or hearth, completely covered with a brick structure through which the charge of ferrous stock and limestone is introduced. It is fueled with coke gas, oil, or tar introduced through a burner playing a flame across the hearth while the products of combustion escape through the furnace wall away from the burner. An advantage of the open-hearth process is that testing for carbon content during the heating is possible, allowing adjustments to be made to the feed-stock at that time to control the chemistry of the product.

Electric Arc Furnace. The electric arc furnace is a large kettle-shaped chamber lined with fire brick, into which a charge of steel scrap with coke is melted by means of heat produced by an electric arc. Since no burning of fuel is required, the oxygen of the steel can be controlled and kept to a minimum. Alloying elements can be added without the fear of oxidation. Because of the control of heat time, temperature, and chemistry, the electric arc furnace is used in the production of high-quality alloy steels.

Argon Oxygen Process. The argon oxygen process (AOP) is used in the production of specialty steels with low carbon and sulfur and high chromium content. A charge of steel of almost the desired properties is introduced into a basic oxygen furnacelike vessel, and controlled amounts of oxygen and argon are introduced into the melt. This reducing process conserves valuable chromium.

Vacuum Degassing Process. When exceptionally high quality steel is required, steel can be ‘‘degassed’’ in a vacuum environment. This vacuum degassing process provides strong reduction in hydrogen, oxygen, nitrogen, inclusions, and contaminants such as lead, copper, tin, and arsenic.

Ingots, Blooms, and Billets. Ingots, blooms, and billets are the shapes into which the molten metal is solidified before using it in a particular pipe-making (or other) process. An ingot is poured from the molten steel and after solidification goes to the blooming mill to be rolled into square blooms, which are further formed onto bar rounds. Alternately, in the case of large pipe, the ingot may be formed into pierced billets to be used in the seamless tube-making process.

Continuous Casting Process. Although the development of the continuous casting process (Fig. A5.2) began in the nineteenth century, it was after World War II that its use became of great commercial interest. In the continuous casting process, molten steel is poured from the melting furnace to a ladle feeding a reservoir called a tundish. The tundish feeds a lubricated mold that has a cooled copper surface, and the solidifying steel is continuously drawn from the mold. In the case of piping steel, the mold is the shape of the billet or slab used in the tube-making process. There are many types of continuous casting processes, ranging from vertical to horizontal, with variations of bent sections in between. This process is now used in more than half the world’s steel production. In Japan, 85 percent of the total steel produced is by the continuous casting process.

Pipe- and Tube-Forming Processes

There are basically two types of pipe- and tube-forming processes, namely, seamless and welded. Each process imparts unique properties to the pipe or tube. Seamless

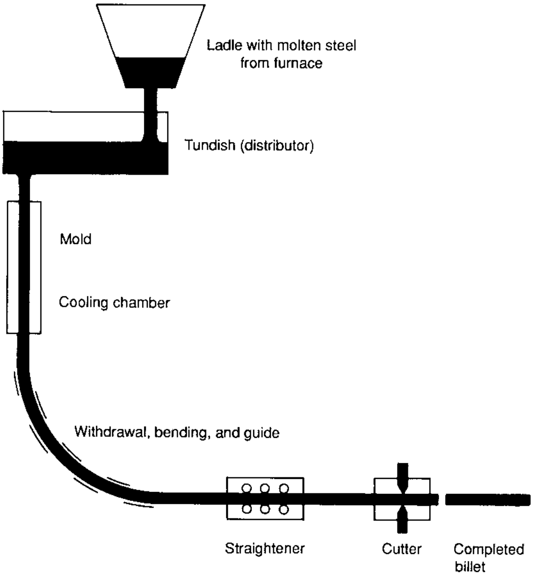

FIGURE A5.2 Continuous casting process.

pipe or tube does not have the presence of a welded seam along the length of the pipe. This seam has traditionally been believed to be a potential weakness. The development of automated welding processes and quality control, however, has made this a virtually nonexistent concern. The control of thickness uniformity and concentricity is relatively easy with welded pipe and tube. In general, the seamless pipe is more expensive to produce. The classification of cylindrical tubular products in terms of either pipe or tube is a function of end use. This is discussed further under Tubular Product Classification.

Seamless Pipe. Seamless tube and pipe (Fig. A5.3) are manufactured by first producing a hollow tube which is larger in diameter and thickness than the final tube or pipe. The billet is first pierced by either a rotary (Mannesmann) piercer or by a press piercing method. For tubes of small diameter, the mandrel mill process is used. For medium outside diameter tubes of carbon or low-alloy steel, the Mannesmann plug mill process is used. Large-diameter, heavy-wall carbon steel, alloy, and stainless pipe is manufactured by the Erhardt push bench process and vertical extrusion similar to the Ugine Sejournet type extrusion process. High-alloy and specially shaped pipe are manufactured by the Ugine Sejournet extrusion-type process. These processes are performed with the material at hot-metal-forming temperatures. Further cold processing may or may not be performed to obtain further dimensional accuracy, surface finish, and surface metallurgical structure.

Mandrel (Pilger) Mill Process. In the mandrel (pilger) mill process (Fig. A5.4), a steel billet is heated to forging temperature and placed between the rolls of a hot rotary piercing mill. A piercing point is placed at the center of the billet, and the rotating rolls are designed to advance the billet over the piercing point, thereby forming a hole through the center of the billet along its entire length as it advances

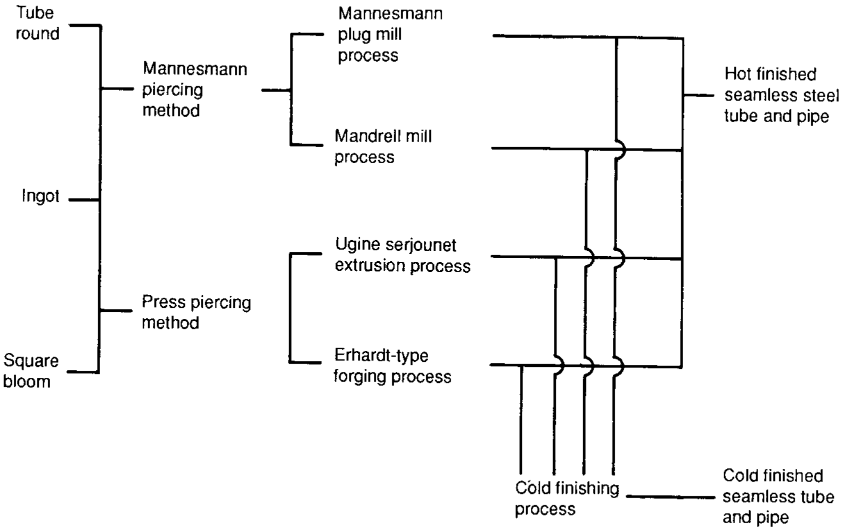
Tube round
Ingot
Square bloom
Mannesmann piercing method
Press piercing method
Mannesmann plug mill process
Mandrell mill process
Ugine serjounet extrusion process
Erhardt-type forging process
Hot finished seamless steel tube and pipe
Cold finishing process
Cold finished seamless tube and pipe

FIGURE A5.3 Seamless tube and pipe manufacturing processes.

into the tilted rolls. A mandrel of outside diameter approximately that of the inside finished pipe diameter is pressed into the pierced hole of the billet. This combination of mandrel and billet is placed between rolls of a pilger-mill having a cam-shaped contour revolving counter to the direction in which the billet is being forced by means of a hydraulic and pneumatic ram mechanism.

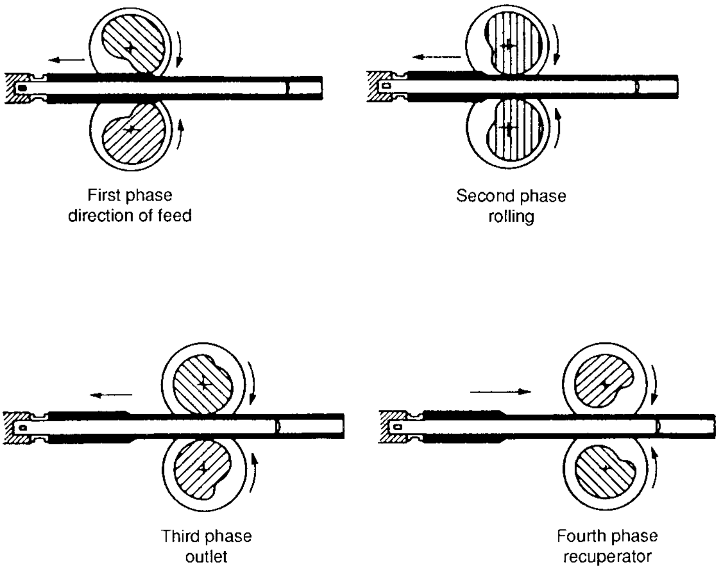
First phase direction of feed
Second phase rolling
Third phase outlet
Fourth phase recuperator

FIGURE A5.4 Mandrel (pilger) mill process.

In the pilger-mill, the rolls first grab the hot billet and after some rotation form a shaft. The pressure of the rolls forces the billet backward, and the resulting tube section is squeezed and smoothed out in the adjacent part of the roll groove. This process is equivalent to forging the billet against the mandrel and driving the billet and mandrel against the ram. After reaching the open portion of the cam shape, the ram mechanism again forces the billet into the rolls. Following the pilger-mill process, the tube is reheated and passed through a reducer or sizer to provide a more uniform diameter. The resulting tube or pipe is called *hot finished seamless*.

The pilger-mill process is slower than conventional drawing. However, since large reductions in diameter are possible in a single pass, the process is applied to the production of tubes of small diameter such as heat exchangers, fossil fuel boilers, and nuclear steam generators.

Mannesmann Plug-Mill Process. In the Mannesmann plug-mill process (Fig. A5.5) the billet may be pierced in two hot rotary piercers because of the greater reduction needed for medium-size pipe and tube. Following the piercing process, the pierced billet is placed in a plug-mill, which reduces the diameter by rotating the tube over a mandrel. Having some ovality, the tube is next inserted between the rolls of reelers which provide for dimensional correction and burnish the inside and outside diameters of the tube. Finally, after reheating, the tube reenters a reeler and sizing rollers to provide for greater dimensional uniformity.

The Mannesmann plug-mill process is a standard process for making large quantities of thin-wall stainless steel tube or pipe of uniform size and roundness throughout its entire length.

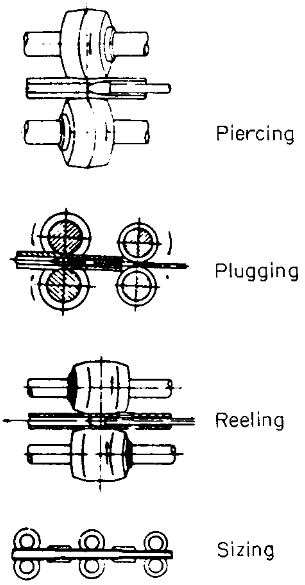

FIGURE A5.5 Mannesmann plug-mill process.

Ugine Sejournet Type Extrusion Processes. The Ugine Sejournet extrusion process (Fig. A5.6) is used for high-alloy steel tubes and pipe such as those of stainless steel and specially shaped pipe. A descaled billet, heated to approximately 2300°F (1260°C), is placed in the vertical press compartment with an extrusion die at its bottom. After applying a hydraulic ram to the billet, a piercing mandrel within the ram punches the billet, producing a cylinder from which the punch piece is ejected through the extrusion die opening. Following this, the ram is activated to apply pressure to the billet, and the billet is extruded through the annulus formed between the piercing mandrel and die cavity. In horizontal presses, piercing is done as a separate operation, or a hollow is used with a mandrel and die. The mandrels and dies are made of high-alloy steels containing tungsten, molybdenum, and chromium having Rockwell C hardness values of approximately 46. Powdered glass is the lubricant used in this process. Heavy-wall pipe in sizes NPS 8–48 (DN 200–1200), having a wall thickness ranging from 1 in (25 mm) to 6 in (150 mm), is extruded vertically to 45 ft (14 m) lengths using procedural steps in the Ugine Sejournet process and a graphite lubricant. These large extrusions of carbon-, alloy-, and

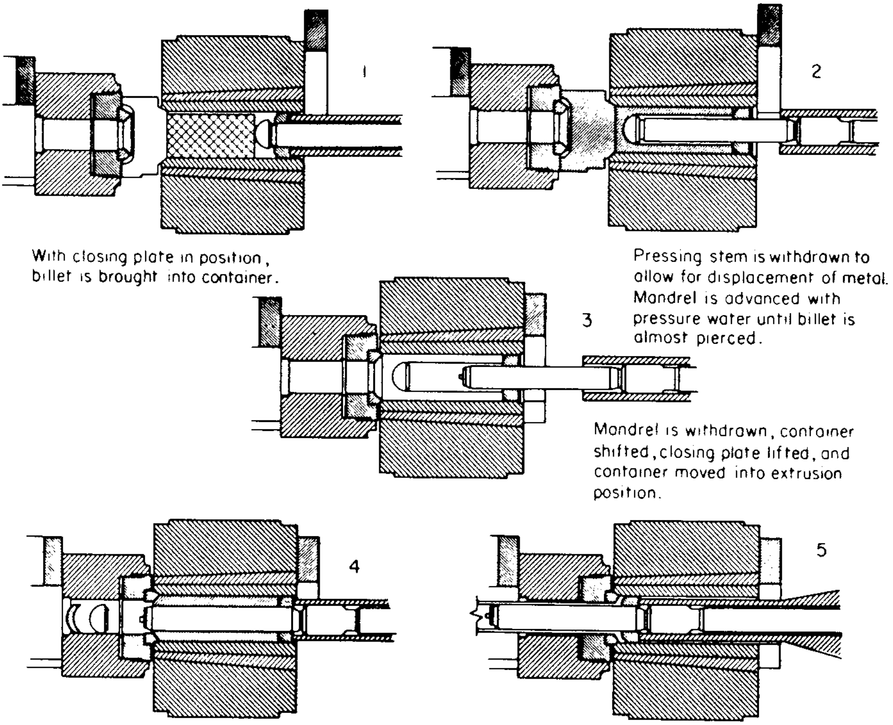

With closing plate in position, billet is brought into container.

Pressing stem is withdrawn to allow for displacement of metal. Mandrel is advanced with pressure water until billet is almost pierced.

Mandrel is withdrawn, container shifted, closing plate lifted, and container moved into extrusion position.

Stem brought back into container with prefilling water, mandrel being advanced to pierce billet completely.

Billet is extruded.

FIGURE A5.6 Ugine Sejournet extrusion process.

nickel-based materials include ASTM specifications A 106, Grades B & C; A 312; A 333; A 335; A 376; B 167; and B407. Heavy-wall pipe per ASTM A335, Grades P11, P22, and P91 is increasingly being used in power generation. In addition, heavy-wall pipe is utilized in offshore oil drilling and production.

Forged Seamless Pipe. Forged pipe is used for large-diameter, NPS 10–30 (DN 250–750), and thickness, 1.5–4 in (40–100 mm), pipe, where equipment availability and cost for other seamless grades are limiting. There are two processes available for the production of forged seamless pipe, namely, forged and bored pipe and hollow forged pipe.

Forged and Bored Seamless Pipe. In the forged and bored process a billet or ingot heated to forging temperature is elongated by forging in heavy presses or forging hammers to a diameter slightly larger than that of the finished pipe. After turning in a lathe to the desired outside diameter, the inside diameter is bored to the specified internal diameter dimensions. The resulting pipe can be made to very close tolerances. Sections 50 ft (15 m) long have been produced by this process.

Hollow Forged Seamless Pipe Erhardt Type Process. The Erhardt process (Fig. A5.7), developed by Heinrich Erhardt in Germany in 1891, consists of heating a

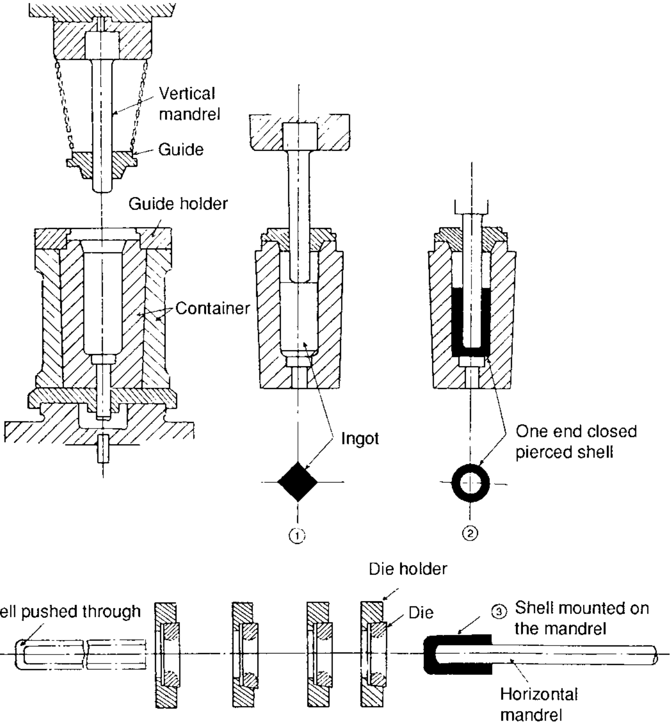

FIGURE A5.7 Hollow-forged seamless pipe—Erhardt-type process.

square ingot to forging temperature, placing it into a circularly hollow die, and incompletely piercing it with a vertical piercing mandrel such that a cup shape is obtained. As a result of the piercing at forging temperature, the square ingot becomes the (circular) shape of the die. After reheating, the cup-shaped shell is mounted on a mandrel and pushed through a series of dies to the desired diameter and wall thickness, after which the cupped end is removed and the inside and outside pipe diameters are machined. This process is used for large-diameter and heavy-wall seamless pipe for boiler headers and main steam line piping. It can be applied to produce low and medium carbon steel pipe (ASTM A53, A106, A161, A179, A192, A210), stainless steel pipe (TP329, TP304, TP304L, TP321, TP347, TP316), and high nickel alloys (A333, A334).

Cold and Hot Finishing of Seamless Pipe and Tube. Pipe that has been produced by the Mannesmann plug-mill, mandrel mill, Ugine Sejournet, or Erhardt forging process can be used as hot finished seamless steel pipe or tube if the application does not require further finishing. If further finishing is required, the pipe or tube may be further reduced by a cold reduction process (Fig. A5.8). If the cold reduction processes are used, the reduced tube must be heat-treated in a furnace such as a bright annealing furnace or in a continuous barrel furnace. Subsequent to the heat treatment of the cold finished pipe, the pipe must pass through a straightening process which corrects any nonstraight sections caused in the pipe by the heat treatment of cold reduced pipe. The straighteners are either a series of rolls

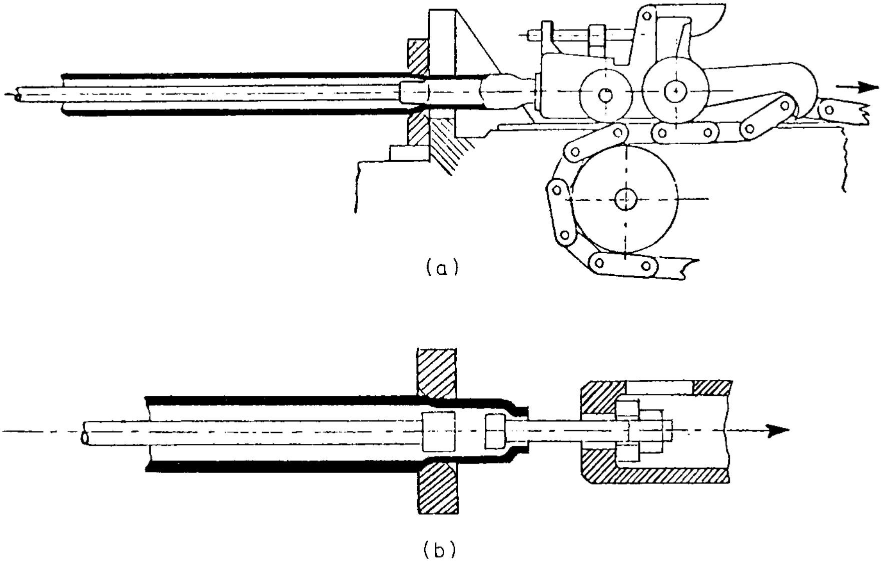

FIGURE A5.8 Cold and hot finishings of seamless pipe and tube.

through which the pipes pass cold or a device which bends the pipe at discreet locations along the pipe. The resulting product is called *cold finished seamless pipe* or *tube*.

In applications of tube to fossil fuel boilers, cold finishing is sometimes specified. Cold finishing improves the surface finish and dimensional accuracy. Some boiler manufacturers, however, consider the hot finished tube surface satisfactory and specify it as such because of its reduced cost.

Welded Pipe. Welded pipe is produced by forming a cylinder from flat steel sheets coming from a hot strip mill. The strip mill takes the square bloom from the blooming mill and reduces it into plates, skelp, or coils of strip steel to be fed into the particular welding process equipment. Butt-weld pipe is made by furnace heating and forge welding or by fusion welding using electric resistance, flash, submerged-arc welding, inert-gas tungsten-arc welding, or gas-shielded consumable metal-arc welding. The welded seam is either parallel to the tube axis or in a spiral direction about the tube centerline.

Furnace-Welded (Continuous or Butt-Welded) Pipe. This is a low-cost carbon steel pipe below 4-in diameter made of steel from open-hearth or basic oxygen Bessemer steel. In this process, skelp is heated to welding temperature in a continuous furnace and passed through forming and welding rolls, welding the strip edges at the same time the tube is formed. Strips can be consecutively resistance-welded to each other to form a continuous pipe.

Fusion-Welded Pipe. Fusion-welded pipe is produced by resistance-welding, induction-welding, or arc-welding.

Electric Resistance-Welded Pipe. In the electric resistance-welded (ERW) pipe process (Fig. A5.9), upon exiting the forming mill, the longitudinal edges of the cylinder formed are welded by flash-welding, low-frequency resistance-welding,

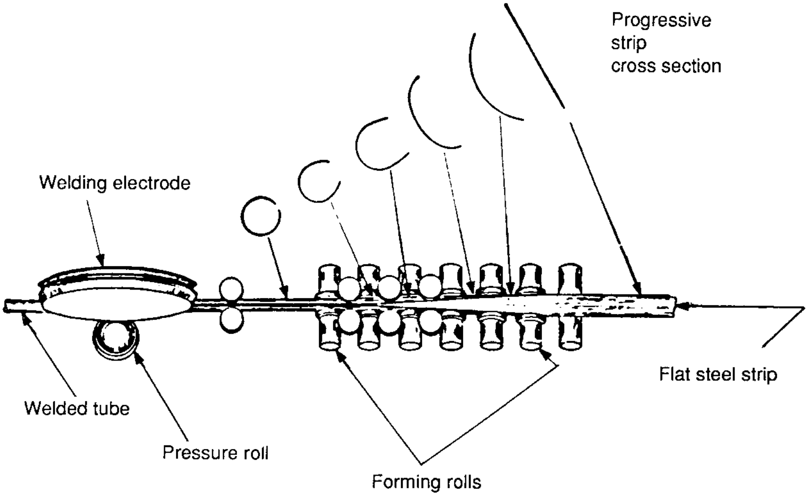

FIGURE A5.9 Electric resistance welded pipe process.

high-frequency induction-welding, or high-frequency resistance-welding. All processes begin with the forming of the cylinder with the longitudinal seam butt edges ready to be welded.

In the flash-welding process, the butted cylinder surfaces are placed in contact; a voltage is applied across the contact, causing metal flashing along the seam length and raising the steel temperature locally to the metal-forming temperature. After this, the seam edges are pressed together and a pressure fusion-weld is formed at a temperature lower than the steel melting point. The upset material along both the inside and outside of the seam is removed with a scarfing tool. This process is used to produce high-strength carbon steel pipe from NPS 4 to 36 (DN 100 to 900).

In the low-frequency resistance method, electric current and pressure are simultaneously applied, and the resulting heat causes melting of the edges. The resulting seam is similar to that from the flash-welding process and requires removal of the upset material. Postweld heat treatment may be desirable for stress relief, tempering, or recrystallization. This process is applied to pipe of outside diameters up to NPS 22 (DN 550).

High-frequency welding process, using an alternating current of more than 400,000 Hz, is similar to the low-frequency resistance welding process. The lower inductance path followed by the current produces a smaller high-temperature band that minimizes the amount of upset material. This process is used for pipe up to NPS 42 (DN 1050).

For production of small-diameter pipe at high rates of production, the high-frequency induction-welding process may be used. In this process, an induction coil raises the seam temperature to welding temperature. The rapid increase in temperature caused by the high-frequency current causes little upsetting because of the resulting control of temperature and fusion.

Several arc-welding processes are used in commercial welded pipe production. These include the submerged-arc-welding process, the inert-gas tungsten-arc-welding process, and the gas-shielded consumable metal-arc-welding process.

In the submerged-arc-welding process, bare wire consumable electrodes are added to the weld metal under a blanket of flux. The melting flux creates a protective atmosphere of inert gas and a slag blanket over the solidifying weld metal. In heavy-wall piping, simultaneous submerged arc seam welds on inner and outer sides of the pipe are sometimes used to build up the weld thickness to the desired level. In modern pipe production facilities, automated equipment is used to control all variables in the submerged arc process, including relative movement speed between pipe and welding heads, wire feed rate, welding current, and flux feed rate. Submerged-arc seam-welded pipe is used in critical high-temperature or high-pressure applications in the electrical power generation process and chemical industries.

For carbon steel and stainless steel pipe of smaller wall thickness, the inert-gas tungsten-arc-welding process is used. The weld is protected by an inert gas such as argon or helium, which forms a blanket over the weld metal. For thicker-wall pipe, a filler wire may be fed into the protective gas blanket. For thin-wall pipe, no filler is used. A number of variations in pipe forming before welding are used, including molding, pressing, or rolling strip into cylinders.

Spiral Welded Pipe. Lightweight pipe for temporary or light operation duty such as in water systems applications may be made by the spiral-welded process. In this process, narrow strips of steel sheet are helically wound into cylinders. The edges of this strip can either be butting or overlapping and are welded by any of several electric arc-welding processes.

Cast Pipe

Cast-Iron Pipe. There are four basic types of cast iron: white iron, gray iron, ductile iron, and malleable iron. White iron is characterized by the prevalence of carbides which impart high compressive strength, hardness, and resistance to wear. Gray cast iron has graphite in the microstructure, giving good machinability and resistance to wear and galling. Ductile iron is gray iron with small amounts of magnesium or cesium which bring about nodularization of the graphite, resulting in both high strength and ductility. Malleable iron is white cast iron which has been heat-treated to provide for ductility.

Cast-iron pipe is extensively used for underlying water, sewage, and gas distribution systems because of its long life expectancy. Specifications for this pipe can be found under Federal Specification W-W-P-421b-Pipe, Cast Iron, Pressure (for Water and Other Liquids). Cast-iron pipe is produced from four processes: vertical pit casting, horizontal casting, centrifugal sand mold casting, and centrifugal metal mold casting.

Vertical Pit Process. The vertical pit process for producing pipe requires a sand mold formed into a pipe pattern of the outer surface of the pipe, into which a separately made core is placed. The molten iron is poured into the vertical annulus between the outer mold and the core. American Standard Specifications for Cast Iron Pit Cast Pipe for Water or Other Liquids are available in ASTM Specification A 377. Pit-cast pipe specifications for the gas industry may be found in American Gas Association (AGA) Standards for Cast Iron Pipe and Special Castings. ASTM Designation A142 provides specifications for pit-cast culvert pipe.

Horizontal Process. In the horizontal cast-iron pipe process, horizontal outer molds are made in halves, with a core formed around a perforated horizontal bar. After the top half is placed on the bottom half, the molten iron is introduced in a manner preventing ladle slag from entering the mold.

Centrifugally Cast-Iron Pipe. There are two types of centrifugal casting machines—horizontal and vertical. Pipe is most commonly produced in the horizontal machine. The centrifugal castings are formed after molten metal is poured into a rotating mold. The mold continues its rotation until solidification of the metal is complete, after which the casting is removed. Molds can be made of sand or, for permanent molds, graphite, carbon, or steel. The centrifugal casting process provides a means of producing high-quality castings which are defect-free due to the absence of shrinking. These castings cool from the outside to the inside, providing a desirable directional solidification which results in cleaner and denser castings than those resulting from static casting methods.

Cast-Steel Pipe. Cast-steel pipe is produced by either static or centrifugal casting processes. In the horizontal centrifugal casting machine, the molten steel is introduced into the rotating mold of sand, ceramics, or metal. Centrifugally cast pipe can be obtained in sizes up to NPS 54 (DN 1350). Application of this pipe can be found in paper mill rolls, gun barrels, and high-temperature and pressure service in refineries (temperatures above 1000°F or 538°C). This process is also used for high-nickel and high-nickel alloy pipes.

Cold-Wrought Steel Pipe. Centrifugally cast stainless steel pipe can be cold expanded subsequent to casting by internally applied pressure to form cold-wrought pipe. The process, called hydroforging, applied to austenitic stainless steels provides for recrystallization and grain refinement of the centrifugally cast material grain structure.

NONFERROUS PIPE-MAKING PROCESSES

Aluminum and Aluminum Alloy Tube and Pipe

Aluminum tubular products include both pipe and tube. They are hollow-wrought products produced from a hollowed ingot by either extrusion or by welding flat sheet, or skelp, to a cylindrical form. General applications are available in alloys 1100, 2014, 2024, 3003, 5050, 5086, 6061, 6063, and 7075. For shell and tube heat exchanger applications, alloys 1060, 3003, 5052, 5454, and 6061 are available. Pipe is available only in alloys 3003, 6061, and 6063. The designation numbers indicate the particular alloying element contained in the aluminum alloy (such as copper, manganese, silicon, magnesium, and zinc) and the control of the impurities. The numerical designation system consists of four numbers, *abcd*, where *a* designates the major alloying element in the aluminum alloy: 1 for 99 percent pure aluminum, 2 for copper, 3 for manganese, 4 for silicon, 5 for magnesium, 6 for magnesium and silicon, 7 for zinc, and 8 for another element. Digit *b* designates an alloy modification for groups 2 through 8 and an impurity limit for group 1. Digits *c* and *d* indicate the specific alloy for groups 2 through 8 and the purity of group 1.

Copper and Copper Alloy Tube and Pipe

Copper tube and pipe have a wide range of application throughout the chemical, process, automotive, marine, food and beverage, and construction industries. Unified Numbering System (UNS) designations (CXXXXX) have been established for many alloys of copper. ASTM and ASME specifications have been developed for copper tube and pipe. Seamless pipe and tube are covered by ASTM B466, B315, B188, B42, B302, B75, B135, B68, B360, B11, B395, B280, B306, B251, B372, and B88. ASME specifications include SB466, SB315, SB75, SB135, SB111, SB395, and SB359.

Tubes and pipe of copper and copper alloys are produced by either of two processes—piercing and extrusion, or welding skelp formed into cylindrical shape. The seamless pipe or tube produced through the extrusion process is the most common commercial form of copper and copper alloy tubular products.

Hot Piercing Process. In the Mannesmann piercing process, a heated copper billet is first pierced, then rolled over a mandrel which determines the inside diameter of the pipe. Following the piercing operation, the pierced shell is drawn through a die and over a plug to obtain the finished outside and inside diameters.

Extrusion Process. In the extrusion process, the heated copper or copper alloy billets are formed into shells by heavy hydraulic presses. The hollowed-out billet is then extruded through a die and over a mandrel to form the outside and inside diameters of the pipe.

Cold-Drawing Process. The cold-drawing process uses mother pipe which is placed on a draw bench which pulls a cold tube through one or a multiplicity of dies and over a mandrel to reduce the pipe gradually to its finished dimensions.

Other Processes. Other processes of significance are the cup-and-draw process for large-diameter pipe and the tube-rolling process which reduces copper tubing by means of cold-working over a mandrel with oscillating tapered dies.

Nickel and Nickel-Alloy Pipe and Tube

Nickel and nickel-alloy pipe and tube, because of their high strength and generally good resistance to oxidation and corrosion, are used in the chemical industry and in steam-generation equipment for nuclear power-generation plants. Applications of nickel are found in tubes and pipe of pure nickel and binary and tertiary alloys of nickel, such as Ni-Cu (Monel 400 and Monel K-500), Ni-Mo and Ni-Si (Hastelloy B), Ni-Cr-Fe (Inconel 600 and Inconel 800), and Ni-Cr-Mo (Hastelloy C276 and Inconel 625) alloys. The alloys are used in applications requiring corrosion resistance to water, acids, alkalis, salts, fluorides, chlorides, and hydrogen chloride. The alloy must be carefully selected to provide for resistance to the specific corrosion media found in the environment.

Nickel and nickel-alloy pipe and tube are produced by the Ugine-Sejournet extrusion process, in which a shell is formed by hydraulic piercing of a billet by a ram and subsequent extrusion. Alternately, the billet may be initially pierced by means of drilling.

Titanium and Titanium-Alloy Tube and Pipe

Titanium and its alloys have provided the engineering designer with an important alternative to aluminum. They are lightweight and have high strength at moderately elevated temperatures, good toughness, and excellent corrosion resistance. Their applications have been found in a wide range of industries, including aerospace, heat-exchange equipment, chemical plants, and power-generation facilities.

There is a wide range of alloying systems to which titanium may be produced. The alloying elements possibly include aluminum, molybdenum, nickel, tin, manganese, chromium, and vanadium. UNS numbers are used to identify the many available alloys and forms of titanium.

Titanium and alloys of titanium pipe and tube are produced from a melt of raw titanium "sponge" and alloying metals in a vacuum electric arc furnace. An ingot is obtained which is reduced to a billet. The billet provides the stock for the extrusion process, from which the tube or pipe is formed. The process consists of initially piercing the billet, then passing a heated shell through a die and over a mandrel.

COMMERCIAL PIPE AND TUBE SIZES

The standard pipe sizes and other pipe properties are given in App. E2 and E2M, and the standard tube sizes and other tube properties are given in App. E3 and E3M.

TUBULAR PRODUCT CLASSIFICATION

Pipe and tubing are considered to be separate products, although geometrically they are quite similar. "Tubular products" infers cylindrical products which are hollow, and the classification of "pipe" or "tube" is determined by the end use.

Piping Classification

Tubular products called pipe include standard pipe, conduit pipe, piling pipe, transmission (line) pipe, water-main pipe, oil country tubular goods (pipe), water-well pipe, and pressure pipe. Standard pipe, available in ERW or seamless, is produced in three weight (wall-thickness) classifications: standard, extra strong, and double extra strong (either seamless or welded). ASTM and the American Petroleum Institute (API) provide specifications for the many categories of pipe according to the end use. Other classifications within the end use categorization refer to the method of manufacture of the pipe or tube, such as seamless, cast, and electric resistance welded. Pipe and tube designations may also indicate the method of final finishing, such as hot finished and cold finished.

Tubing Classification

Pressure tubes are differentiated from pressure pipe in that they are used in externally fired applications while carrying pressurized fluid inside the tube.

Structural tubing is used for general structural purposes related to the construction industry. ASTM provides specifications for this type of tubing.

Mechanical tubing is produced to meet particular dimensional, chemical, and mechanical property and finish specifications which are a function of the end use, such as machinery and automotive parts. This category of tubing is available in welded (ERW) and seamless form.

SPECIALTY TUBULAR PRODUCTS

There are many specialty tubular products designed for special applications requiring unique manufacturing methods for production. Examples are the rifled boiler tube, the finned heat-exchanger tube, the duplex tube, and the double-wall tube.

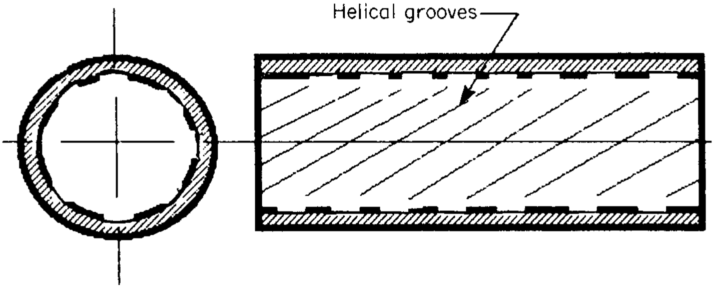

FIGURE A5.10 Single rifled boiler tube.

The rifled boiler tube (Fig. A5.10) is used to provide an improved heat transfer surface on the inner surface of a boiler tube. The rifling twist, similar to that of a rifle, is produced by specially shaped mandrels over which the tube is drawn.

The finned heat exchanger (Fig. A5.11) tube provides improvement in thermal efficiency by providing an extended surface from the base tube surface. The extended surface is produced by turning the tube through special sets of dies which raise fins from part of the base tube material. These fins can be coarse or fine depending on the equipment developed for producing fins.

Duplex or composite tubes have been developed to provide a different material on the inside and outside of the tube to meet the requirements of a different environment on either side of the tube. One method of producing a composite tube is by providing a bimetal mother tube before the extrusion or drawing process. Careful development of this process will yield a composite tube with an excellent bond between the two materials.

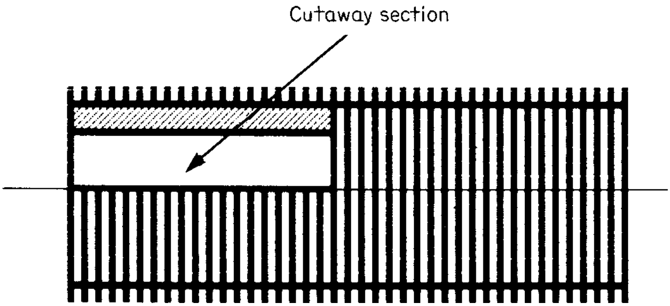

FIGURE A5.11 Finned heat-exchanger tube.

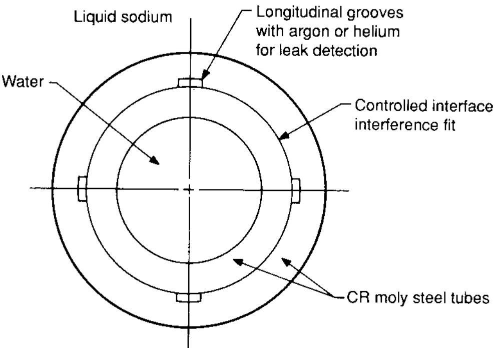
Liquid sodium
Longitudinal grooves with argon or helium for leak detection
Water
Controlled interface interference fit
CR moly steel tubes

FIGURE A5.12 Double-wall leak-detecting tube.

Double-wall tubes (Fig. A5.12) are used in applications requiring leak detection to avoid a catastrophic mixture of the fluids on either side of the tube. An inert detecting gas can be placed in the annulus between the two tubes to sense very small amounts of leakage from either tube so as to allow careful shutdown of the system. This tube is manufactured by inserting one tube inside the other, then drawing the combined tube through dies or over mandrels which provide a calibrated prestress between the two tubes. This type of tube was developed for application to a fast breeder reactor sodium-water steam generator.

ENGINEERING SELECTION OF PIPE MANUFACTURING METHODS

The selection of the appropriate pipe manufacturing method by the design engineering specification deserves consideration. For many applications, the codes and standards specified in the procurement contract provide for little room to select an optimal manufacturing method. The safest procedure is to obtain the price and schedule from suppliers before firming the piping specifications. At times the selection of the pipe with the best manufacturing process might be tempered by project cost or delivery considerations. In such cases, much is required of the engineer to consider whether lesser quality will be able to meet the desired reliability standard. It therefore is essential that the engineer is aware of the alternates and their operating history of success and failure before an appropriate alternative decision can be accepted. It must also be recognized that choices based on economic considerations alone may prove to be the more costly in the face of the downtime costs of failure.

CHAPTER A6

FABRICATION AND INSTALLATION OF PIPING SYSTEMS

Edward F. Gerwin, P.E.
ASME Fellow

INTRODUCTION

Background

The term *fabrication* applies to the cutting, bending, forming, and welding of individual pipe components to each other and their subsequent heat treatment and nondestructive examination (NDE) to form a unit (piping subassembly) for installation.

The term *installation* refers to the physical placement of piping subassemblics, valves, and other specialty items in their required final location relative to pumps, heat exchangers, turbines, boilers, and other equipment; assembly thereto by welding or mechanical methods; final NDE; heat treatment; leak testing; and cleaning and flushing of the completed installation.

Depending on the economics of the particular situation, fabrication may be accomplished in a commercial pipe fabrication shop, or a site fabrication shop, where portions of the piping system are fabricated into subassemblies or modules for transfer to the location of the final installation.

Commercial pipe shops have specialized equipment for bending and heat treatment which is not normally available at installation sites. They also have certain types of automatic welding equipment which permits welding to be performed more efficiently and economically than in field locations where fixed position, manual arc welding is most often employed.

As a general rule piping NPS 2½ (DN 65) and larger for nuclear and fossil power plants, chemical plants, refineries, industrial plants, resource recovery, and cogeneration units are most often shop fabricated. Piping NPS 2 (DN 50) and smaller is often shop fabricated where special heat treatment or cleaning practices may be required; otherwise it is field fabricated. Pipelines and other systems involving long runs of essentially straight pipe sections welded together are usually field assembled.

In recent years, the infusion of new bending technologies, new welding processes, new alloys, fracture toughness limitations, and mandatory quality assurance (QA) programs have made piping fabrication and installation much more complex than in the past. Greater emphasis is being placed on written procedures for QA and quality control (QC) programs, special processes, and qualification and certification of procedures and personnel.

Improper selection of fabrication or installation practices can result in a system which will not function properly or will fail before its expected life span. Accordingly, fabrication and installation contractors must work closely with the designer and be aware of the mandatory requirements of the applicable codes, the unique requirements and limitations of the materials, and those of the fabrication and installation techniques being applied.

Codes and Standards Considerations

A great many codes and standards apply to piping. These are discussed in detail in Chap. A4.

It is incumbent on the fabricator and/or installer to be familiar with the details of these codes and standards since some codes have the force of law. As an example, the ASME B31.1 Power Piping Code[1] is referenced by ASME Section I Power Boilers[2] for piping classed as Boiler External Piping. The latter, which is law in most states and Canadian provinces, contains rules for code stamping, data reports, and third-party inspection. Piping under ASME Section III[3] also has legal standing. Most other piping codes are used for contractual agreements.

Most codes reference ASME Section V[4] for nondestructive examination methodology and ASME Section IX[5] for welding requirements.

Each of the codes covers a different piping application, and each has evolved in a different way over the years. For specific practices, some have mandatory requirements, while others only have recommendations. Heat treatment requirements may vary from one to another. The manner in which the code-writing bodies have perceived the hazardous nature of different applications has led to differing NDE requirements.

Generally, the codes are reasonably similar, but the owner, designer, fabricator, and installer must meet the specifics of the applicable code to ensure a satisfactory installation. It is essential that the designer be very familiar with the code being used and that purchasing specifications for material, fabrication, and installation be very specific. Reference to the code alone is not sufficient. In the design, a particular allowable stress for a specific material, grade, type, product form, and/or heat-treated condition was selected. The specifications issued for material purchase and fabrication must reflect these specifies to assure that the proper materials and fabrication practices are used.

As an example: Type 304 stainless steel has a specified carbon content of 0.08 percent maximum. There is no specified minimum. Footnotes in the B31.1 Code Allowable Stress Tables for Type 304 indicate that for use over 1000°F (538°C), the allowable stresses apply only when the carbon content is 0.04 percent or higher. It is essential that this requirement be put in the purchasing specification if the design temperature exceeds 1000°F (538°C).

Similarly, in the B31.1 Code, low chrome alloy electric fusion welded pipe has differing allowable stresses depending upon whether the plate from which it was made was annealed or normalized and tempered. If this material is to be heated above the lower critical temperature during fabrication by hot bending or forming, the designer should specify a postbending heat treatment appropriate for the allowable stress level used in the design.

It is also incumbent upon the fabricator and/or installer to be very familiar with the applicable code. Each project should be reviewed in detail. "Standard shop practices" may not always produce the desired result. Communication between the designer, fabricator, and installer is essential. All should be familiar with the various standards used in piping design. Most piping systems are composed of items which conform to some dimensional standards such as ASME B36.10M[6] and ASME B36.19M for pipe, B16.5[7] for flanges, etc. Other dimensional standards are issued by the Manufacturers Standardization Society (MSS)[8] and the American Petroleum Institute (API).[9]

The Pipe Fabrication Institute (PFI)[10] publishes a series of Engineering Standards which outline suggested practices for various fabrication processes. These standards give excellent guidance for many aspects of piping fabrication not covered by the codes.

The American Welding Society (AWS)[11] publishes a number of recommended practices for welding of pipe in various materials.

Materials Considerations

Piping systems are fabricated from a great variety of metals and nonmetals, material selection being a function of the environment and service conditions. Materials must conform to the standards and specifications outlined in the governing code. Some codes such as ASME Section III impose additional requirements on materials beyond those in the material specifications. All fabrication and installation practices applied to these materials must be conducted so as to assure that the final installation exhibits all of the properties implicit in the design. For example, hot bending of certain austenitic stainless steels in the sensitization range will reduce their corrosion resistance if they are not subsequently heat-treated. Accordingly, a heat treatment to restore these properties should be specified.

Consideration must also be given to the various types of piping products, their tolerances, alloys, heat-treated conditions, weldability, and formability. Pipe is made by a variety of processes and depending on the method of manufacture can have differing tolerances.

Most product forms also come in a variety of alloys, and the choice of a fabrication process may be governed by the alloy. ASME Section IX has developed a system of P Numbers and Group Numbers. This system groups material specifications by chemical composition and/or physical properties. Those with like compositions and properties are grouped together to minimize the number of welding procedure qualifications required. This method of grouping can also be applied to other fabrication processes as well.

FABRICATION

Drawings

Installation Drawings. Current industry practice is for the designer to prepare plans and sections or isometric drawings of the required piping system. These, together with line specifications, outline all the requirements needed for the fabrication and installation. Usually the weld bevel requirements for field welds are specified to assure compatibility between all the system components to be field welded.

Frequently the shop welding bevels are left to the discretion of the fabricator, provided, of course, the required weld quality is attainable.

Location and numbers of field welds are an economic consideration of available pipe lengths, shipping or heat-treating limitations, and field installation limitations.

Shop Details. A piping system prefabricated at a commercial pipe fabrication shop is usually divided into subassemblies or spools.

The manner in which a system is divided depends on many factors: available lengths of straight pipe, dimensional and weight limitations for shipping and heat treatment, field welding clearance requirements, and sometimes scheduling needs.

Bending, forging, special heat treatment, cleaning, and as much welding as possible are normally performed in the shop. Every attempt is made to minimize the number of field welds, but this must be balanced economically against the added costs of transportation and greater field rigging problems because of larger, heavier, more complex assemblies. Where the site conditions are adverse to normal field erection practices, much of the plant can be fabricated in modules for minimal onsite installation work. Once the number and locations of field welds have been decided, the fabricator will prepare detailed drawings of each subassembly.

Each subassembly drawing will show the required configuration; all necessary dimensions required for fabrication; reference to auxiliary drawings or sketches; size, wall thickness, length, alloy, and identification of the materials required; code and classification; reference to special forming, welding, heat treatment, NDE, and cleaning requirements; need for third-party inspection; weight and piece identification number. See Fig. A6.1.

Tolerances. In order to assure installation of a system within a reasonable degree of accuracy, all the components involved must be fabricated to some set of tolerances on those dimensions which affect the system length. Tolerances on valve dimensions are given in B16.34,[12] those of welding fittings in B16.9,[13] and those for flanges and flanged fittings in B16.5, B16.1,[14] etc. The assembly of these components will result in ''tolerance stack-up,'' which could have a significant impact on the overall dimensions, particularly in a closely coupled system.

Piping subassembly tolerances normally conform to PFI-ES-3 ''Fabricating Tolerances.''[15] Usually the terminal dimensions are held to ±⅛ in, but can be held more closely upon agreement with the fabricator.

In order to assure that tolerance stack-up is held to a minimum, the manner in which shop details are dimensioned should be carefully studied. As an example, assemblies with multiple nozzles can result in large deviations if these are dimensioned center to center. A better way is to select a base point and dimension all nozzles from this location. This assures that all nozzles are ±⅛ in (3.0 mm) from the base point. See Fig. A6.2.

For angle bends, terminal dimensions and often a chord dimension are required, since a small variation in angle with long ends can result in serious misalignment. See Fig. A6.3.

Sometimes assemblies which have been fabricated within tolerance may not fit in the field because of tolerance stack-ups on equipment to which they are attached. This will be addressed in the section, ''Installation.''

Procedures and Travelers. The need to assure better control of fabrication processes has led the use of written procedures for most operations. Fabricators will have a library of written procedures controlling cutting, welding, bending, heat treatment, nondestructive examination, and testing. Welding procedures in most

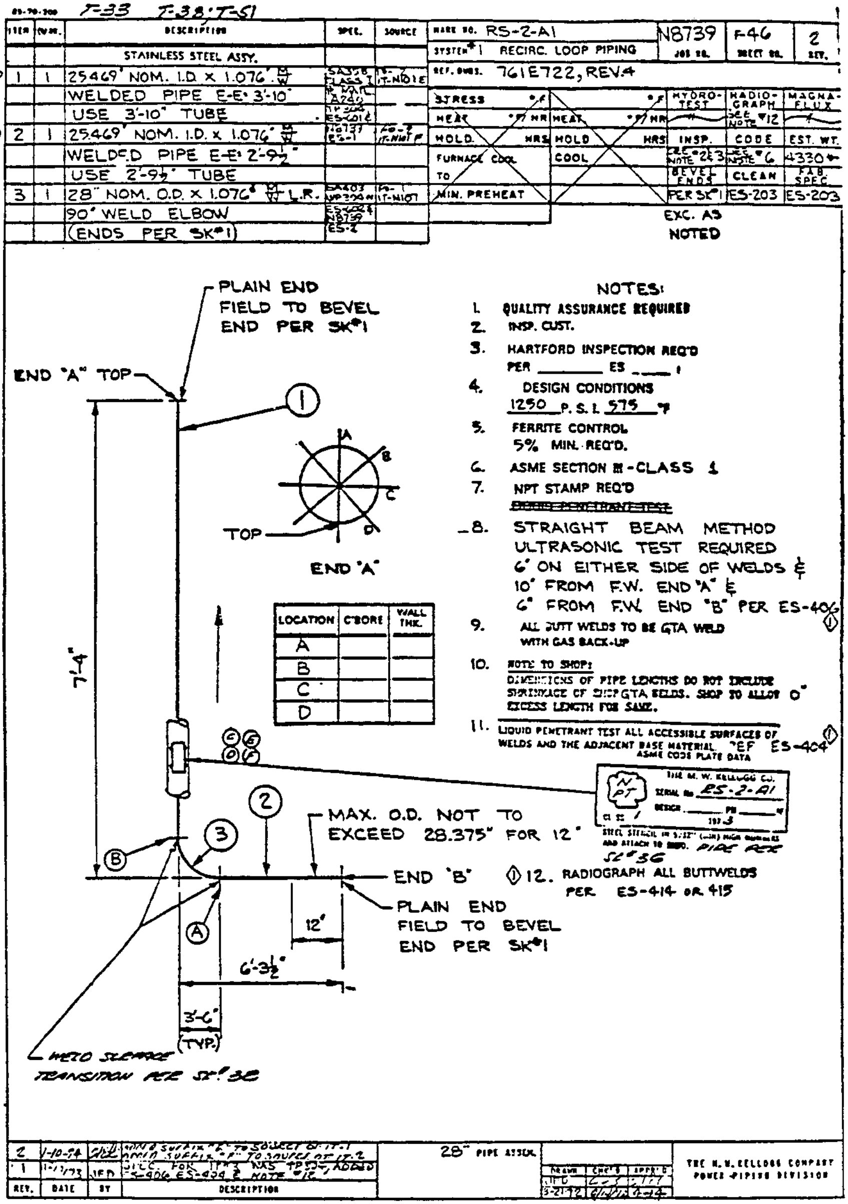
T-33 T-38; T-51
ITEM
NUM.
DESCRIPTION
SPEC.
SOURCE
STAINLESS STEEL ASSY.
1 1 25.469" NOM. I.D. x 1.076" WELDED PIPE E-E: 3'-10" USE 3'-10" TUBE
2 1 25.469" NOM. I.D. x 1.076" WELDED PIPE E-E: 2'-9½" USE 2'-9½" TUBE
3 1 28" NOM. O.D. x 1.076" L.R. 90° WELD ELBOW (ENDS PER SK#1)
SA376 CLASS I
A240
ES-601
ES-1
SA403
ES-602
N8739
ES-2
MARK NO. RS-2-A1
SYSTEM #1 RECIRC. LOOP PIPING
N8739
JOB NO.
F-46
SHEET NO.
2
REV.
REF. DWGS. 761E722, REV.4
STRESS °F
HEAT °F/HR
HOLD HRS
FURNACE COOL TO
MIN. PREHEAT
HEAT °F/HR
HOLD HRS
COOL
HYDRO-TEST
RADIO-GRAPH
SEE NOTE #12
MAGNA-FLUX
INSP.
SEE NOTE #2&3
CODE
SEE NOTE #6
EST. WT.
4330#
BEVEL ENDS
PER SK#1
CLEAN
ES-203
FAB. SPEC.
ES-203
EXC. AS NOTED
PLAIN END FIELD TO BEVEL END PER SK#1
END "A" TOP
1
A
B
C
D
TOP
END "A"
NOTES:
1. QUALITY ASSURANCE REQUIRED
2. INSP. CUST.
3. HARTFORD INSPECTION REQ'D PER ____ ES ____
4. DESIGN CONDITIONS 1250 P.S.I. 575 °F
5. FERRITE CONTROL 5% MIN. REQ'D.
6. ASME SECTION III - CLASS 1
7. NPT STAMP REQ'D
~~LIQUID PENETRANT TEST~~
8. STRAIGHT BEAM METHOD ULTRASONIC TEST REQUIRED 6" ON EITHER SIDE OF WELDS & 10" FROM F.W. END "A" & 6" FROM F.W. END "B" PER ES-406
9. ALL BUTT WELDS TO BE GTA WELD WITH GAS BACK-UP
10. NOTE TO SHOP: DIMENSIONS OF PIPE LENGTHS DO NOT INCLUDE SHRINKAGE OF SHOP GTA WELDS. SHOP TO ALLOW 0" EXCESS LENGTH FOR SAME.
11. LIQUID PENETRANT TEST ALL ACCESSIBLE SURFACES OF WELDS AND THE ADJACENT BASE MATERIAL PER ES-404
LOCATION
C'BORE
WALL THK.
A
B
C
D
7'-4"
ASME CODE PLATE DATA
N PT
THE M. W. KELLOGG CO.
SERIAL No. RS-2-A1
DESIGN ____ PSI ____ °F
CL. III 1
1973
STEEL STENCIL IN 5/32" HIGH NUMBERS AND ATTACH TO DWG. PIPE PER SK#36
2
3
MAX. O.D. NOT TO EXCEED 28.375" FOR 12"
B
END "B"
12. RADIOGRAPH ALL BUTTWELDS PER ES-414 OR 415
A
12"
PLAIN END FIELD TO BEVEL END PER SK#1
6'-3½"
3'-6" (TYP.)
WELD SLEEVE TRANSITION PER SK#32
2 1-10-74 ADD SUFFIX "E" TO SOURCE OF IT.1 ADD SUFFIX "F" TO SOURCE OF IT.2
1 1-17-73 JFD SPEC. FOR IT#3 WAS TP304, ADDED ES-406, ES-404 & NOTE #12
REV.
DATE
BY
DESCRIPTION
28" PIPE ASSEM.
DRAWN
CHK'D
APPR'D
3-21-72
THE M. W. KELLOGG COMPANY POWER PIPING DIVISION

FIGURE A6.1 Shop detail. (*Pullman Power Products Corporation*)

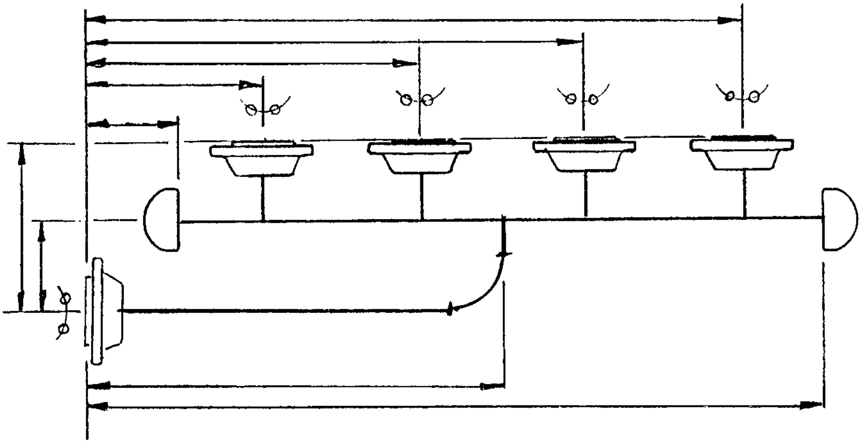

FIGURE A6.2 Dimensioning.

codes are qualified under ASME Section IX, which requires written Welding Procedure Specifications (WPSs) backed up by Procedure Qualification Records (PQRs). Similarly ASME Section V requires NDE to be performed to written procedures.

Frequently, piping fabricators use a system of travelers to control flow through the shop. This practice is well-suited to fabrication of piping subassemblies under QA or QC programs, where record keeping is required. It also affords the purchaser and the third-party inspector opportunities for establishing "hold points" where they may wish to witness certain operations or review certain records.

Fabrication Practices

Cutting and Beveling. The methods of cutting plate or pipe to length can be classed as mechanical or thermal.

Mechanical methods involve the use of saws, abrasive discs, lathes, and pipe-cutting machines or tools. See Fig. A6.4.

Thermal methods are oxyfuel gas cutting or electric arc cutting. Oxyfuel gas cutting is a process wherein severing of the metal is effected by the chemical reaction of the base metal with oxygen at an elevated temperature. In the cutting torch, a fuel such as acetylene, propane, or natural gas is used to preheat the base metal to cutting temperature. A high-velocity stream of oxygen is then directed at the heated area resulting in an exothermic reaction and severing of the material. Oxyfuel gas cutting is widely used for cutting carbon steels and low alloys. It does, however, lose its effectiveness with increasing alloy content.

For higher alloy materials, some form of arc cutting is required. Plasma arc cutting is the process most frequently employed. It involves an extremely high temperature (30,000 to 50,000°K), a constricted arc, and a high-velocity gas. The torch generates an arc which is forced to pass through a small-diameter orifice and concentrate its energy on a small area to melt the metal. At the same time a gas such as argon, hydrogen, or a nitrogen-hydrogen mixture is also introduced at the orifice where it expands and is accelerated through the orifice. The melted metal is removed by the jetlike action of the gas stream.

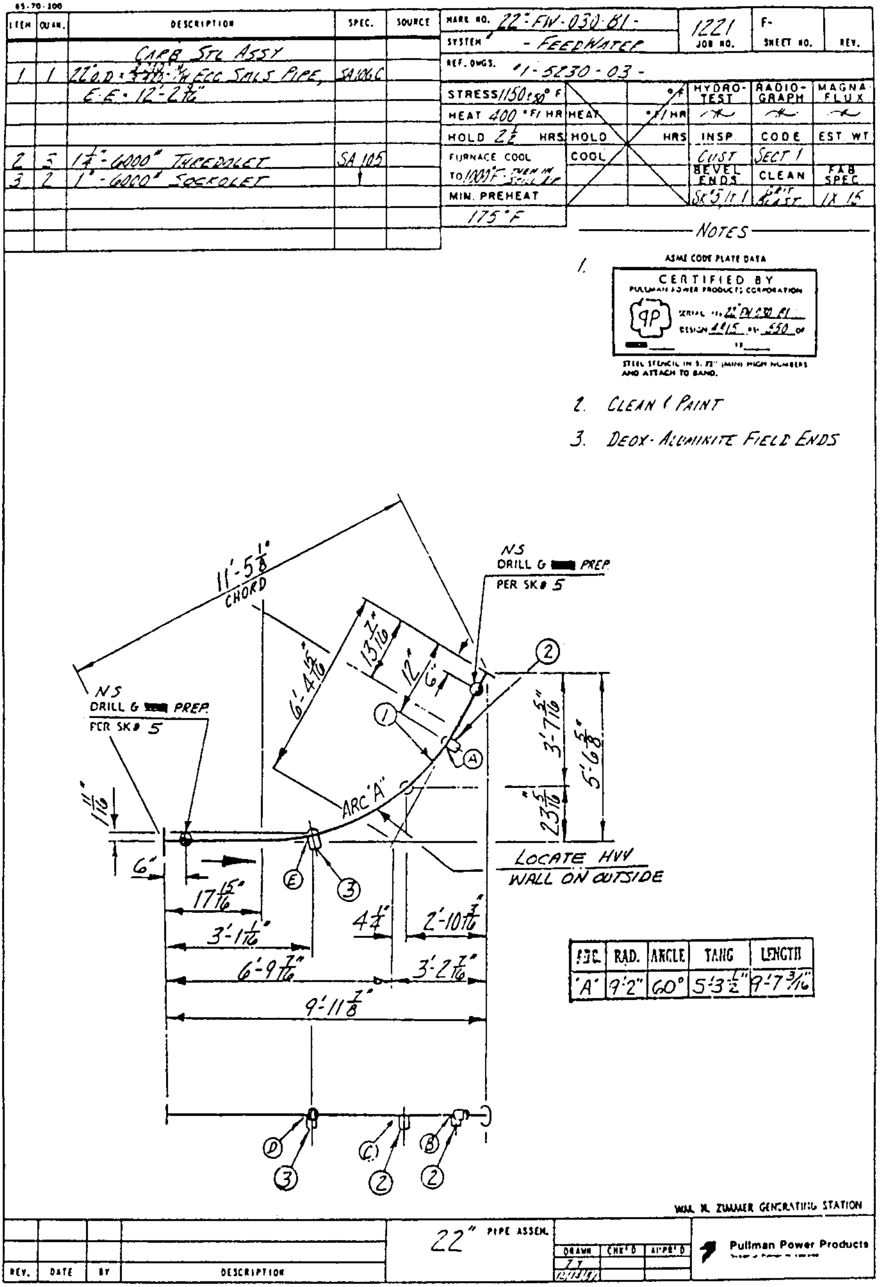

65-70-100

ITEM	QUAN.	DESCRIPTION	SPEC.	SOURCE
		CARB STL ASSY		
1	1	22"O.D. × [illegible] ECC SMLS PIPE,	SA106C	
		E-E: $12'-2\frac{3}{16}''$		
2	3	$1\frac{1}{4}''$-6000# THREDOLET	SA 105	
3	2	1"-6000# SOCKOLET	↑	

MARK NO. 22"-FW-030-B1-

SYSTEM - FEEDWATER

JOB NO. 1221

SHEET NO. F-

REV.

REF. DWGS. #1-5230-03-

STRESS 1150±50 °F		°F	HYDRO-TEST	RADIO-GRAPH	MAGNA FLUX
HEAT 400 °F/HR	HEAT	°F/HR	[illegible]	[illegible]	[illegible]
HOLD $2\frac{1}{2}$ HRS	HOLD	HRS	INSP.	CODE	EST. WT.
FURNACE COOL	COOL		CUST	SECT I	
TO 1000°F THEN IN STILL AIR			BEVEL ENDS	CLEAN	FAB SPEC
MIN. PREHEAT			SK#5 IT 1	GRIT BLAST	IX 15
175°F					

NOTES

1. ASME CODE PLATE DATA

CERTIFIED BY
PULLMAN POWER PRODUCTS CORPORATION
SERIAL NO. 22"FW-030-B1
DESIGN 4015 PSI 550 °F

STEEL STENCIL IN 3/32" (MIN) HIGH NUMBERS AND ATTACH TO BAND.

2. CLEAN & PAINT
3. DEOX-ALUMINITE FIELD ENDS

$11'-5\frac{1}{8}''$ CHORD
NS
DRILL & [illegible] PREP
PER SK# 5
NS
DRILL & [illegible] PREP
PER SK# 5
$6'-4\frac{15}{16}''$
$13\frac{7}{16}''$
12"
6"
②
①
Ⓐ
$3'-7\frac{5}{16}''$
$5'-6\frac{5}{8}''$
$23\frac{5}{16}''$
ARC 'A'
$1\frac{11}{16}''$
6"
$17\frac{15}{16}''$
Ⓔ
③
LOCATE HVY
WALL ON OUTSIDE
$3'-1\frac{1}{16}''$
$4\frac{1}{4}''$
$2'-10\frac{7}{16}''$
$6'-9\frac{7}{16}''$
$3'-2\frac{7}{16}''$
$9'-11\frac{7}{8}''$
Ⓓ
③
Ⓒ
②
Ⓑ
②

ARC	RAD.	ANGLE	TANG	LENGTH
'A'	9'-2"	60°	$5'-3\frac{1}{2}''$	$9'-7\frac{3}{16}''$

WM. H. ZIMMER GENERATING STATION

REV.	DATE	BY	DESCRIPTION

22" PIPE ASSEM.

DRAWN	CHK'D	APPR'D
Z.T. 12/13/72		

Pullman Power Products

FIGURE A6.3 Dimensioning a bend. (*Pullman Power Products Corporation*)

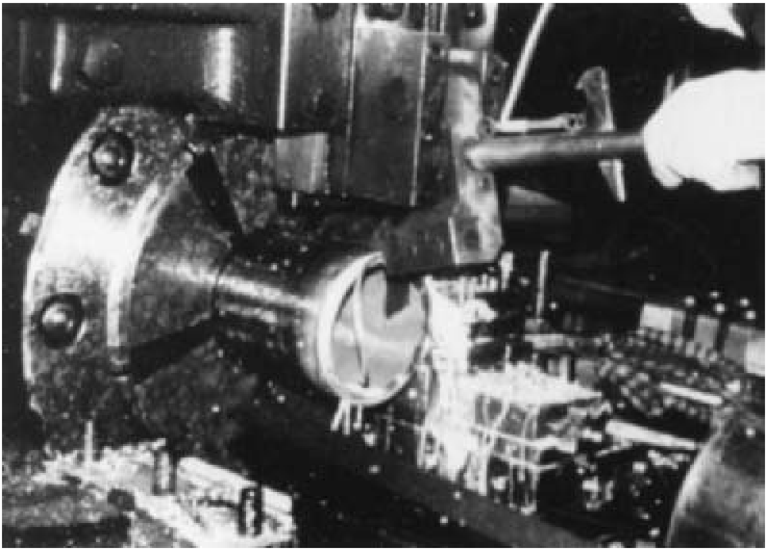

FIGURE A6.4 Pipe-cutting machine. (*Pullman Power Products Corporation*)

Because oxyfuel gas and arc cutting involve the application of heat, preheating may be advisable in some cases.

A very detailed description of oxyfuel gas and arc cutting is presented in *The Welding Handbook.*[16]

Weld end bevels can also be prepared by the mechanical or thermal methods just described. Both mechanical and thermal methods are used to apply the V bevel, which is used in the vast majority of piping applications. For compound and U bevels or those which may involve a counterboring requirement, horizontal boring mills are most appropriate. Various factors to be considered in selecting a weld end bevel are discussed in the section, ''Welding Joint Design.''

Forming. The term *forming* as it relates to piping fabrication encompasses bending, extruding, swaging, lapping, and expanding. All of these operations entail the use of equipment normally only available in pipe fabrication shops. Although the availability of welding fittings in the form of elbows, tees, reducers, and lapped-joint stub ends may reduce the need for certain of these operations, economics may dictate their use, especially where special pipe sizes are involved.

Bending

Economics. The use of bends versus welding fittings for changes in direction should be carefully evaluated from an economic viewpoint. Bends whose radii range from 3 to 5 times the nominal pipe diameter will offer the least pressure drop while still affording adequate flexibility to the system. Since each bend eliminates a welding fitting and at least one weld with its attendant examination, bending is very often the economic choice. In the case of special pipe sizes which are frequently used for main steam, reheat, and feedwater lines in large central power generating units, bending may be the only option available.

Limitations. The metal being bent should preferably exhibit good ductility and a low rate of strain hardening. Most metals used in piping systems fulfill these requirements. A successful bend is also a function of its diameter, thickness, and bending radius. As the diameter-to-thickness ratio increases and the bending radius decreases, there is greater probability of flattening and buckling. Each bending process has differing capabilities, so the selection of a bending process rests on the availability of equipment and/or practices capable of handling the material, diameter, thickness, and bending radius involved.

Accept and Reject Criteria. The codes have certain requirements for the acceptability of finished bends:

1. *Thinning:* In every bending operation the outer portion of the bend (extrados) stretches and the inner portion (intrados) compresses. This results in a thinning of the extrados and a thickening of the intrados. Because of uncertainties introduced by the pipe-manufacturing method, by the pipe tolerances, and by those introduced by the pipe-bending operation itself, it is not possible to exactly predetermine the degree of thinning. However, it can be approximated by multiplying the thickness before bending by the ratio:

$$\frac{R}{R+r} \tag{A6.1}$$

where r = the radius of the pipe (½ the outside diameter)
R = the radius of the bend

The codes require that the wall thickness at the extrados after bending be at least equal to the minimum wall thickness required for straight pipe. Accordingly, the fabricator must assure that the wall thickness ordered has sufficient margin for this effect.

Although the codes do not comment on the resulting increased thickness of the intrados, this thickness does serve to offset a portion of the increased stresses caused by internal pressure which are found at this location. (See *Theory and Design of Modern Pressure Vessels.*[17])

2. *Ovality:* A second acceptance criteria is ovality. During the bending operation, the cross section of the bend arc frequently assumes an oval shape whose major axis is perpendicular to the plane of the bend. See Fig. A6.5. The degree of ovality is determined by the difference between the major and minor axes divided by the nominal diameter of the pipe.

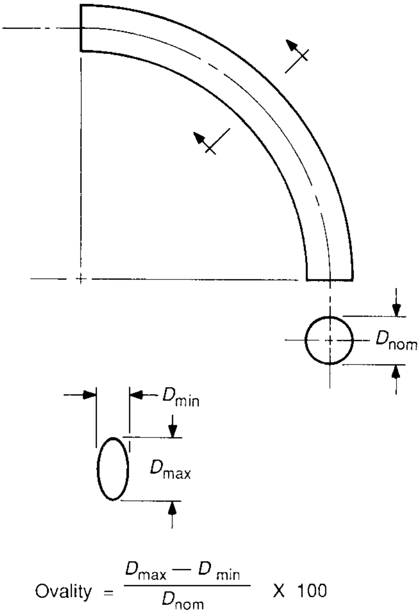

FIGURE A6.5 Bend ovality.

Where the bend is subject to internal pressure, the pressure tries to reround the cross section by creating secondary stresses in the hoop direction. Some codes consider an ovality of 8 percent acceptable in this case. Where the bend is subject to external pressure, the pressure tries to collapse the cross section. The ASME B31.3 Code[18] recommends a 3 percent maximum ovality when the bend is subject to external pressure.

3. *Buckling:* Bending of pipe with large diameter-to-thickness ratios often results in buckling rather than thickening of the intrados, even where internal mandrels or other devices are employed to minimize it. The codes do not address this subject. It is, however, often the subject of "good workmanship" debates. The PFI gives a criterion which has been generally accepted. This appears in PFI ES-24.[19] An acceptable buckle is one where the ratio of the distance between two crests divided by the depth of the average crest to valley is equal to or greater than 12. See Fig. A6.6

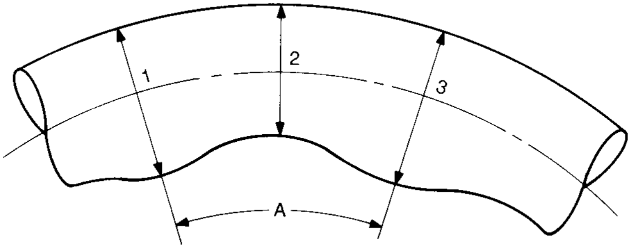

Depth of average crest to valley is the sum of the outside diameters of the two adjoining crests divided by two, minus the outside diameter of the valley.

$$\text{Depth} = \frac{(\text{OD})_1 + (\text{OD})_3}{2} - (\text{OD})_2$$

Ratio of the distance between crests to depth must be equal to or greater than 12.

$$\frac{A}{\text{Depth}} \geq \frac{12}{1}$$

FIGURE A6.6 Suggested pipe buckling tolerance. (*Pipe Fabrication Institute PFI ES-24*)

Bending Methods. Pipe is bent by a variety of methods, using bending tables or bending machines, with and without the application of heat. The selection of one method over another is a function of economics, materials properties, pipe size, bending radius, and equipment availability. The arc length of the bend may be heated in order to reduce the yield strength of the material. Higher bending temperatures result in lowering the yield strength and reduction of the bending energy required.

Cold bending normally infers bending at ambient temperature, while hot bending infers the application of heat. However, definitions given in B31.1 and ASME Section III create an exception to this for *ferritic* materials. These codes define cold bending of *ferritic* steels as any operation where the bending is performed at a temperature 100°F (55°C) below the lower critical or lower. Ferritic materials undergo a phase change on heating and cooling. On heating, this change starts at a temperature called the *lower critical.* (See *Heat Treatment—Ferritic Steels*).

Ferrous Pipe and Tubes

1. *Cold bending:* Where sufficient quantities of repetitive bends are required, ferrous pipes and tubes up to NPS 10 or 12 (DN 250 or 300) with wall thickness of ½ in (12.7 mm) or less are most often bent at ambient temperature using some type of bending machine.

There are a great variety of cold bending machines available, with degrees of sophistication varying from simple manually operated single-plane bending devices to numerically controlled hydraulically operated machines capable of multiplane bends.

In ram-type bending, two pressure dies which are free to rotate are mounted in a fixed position on the machine frame. The pipe to be bent is positioned against these dies. A ram then presses a forming die against the pipe and the pressure dies wipe the pipe around the forming die. See Fig. A6.7. Ram bending is usually applied to heavier wall thicknesses.

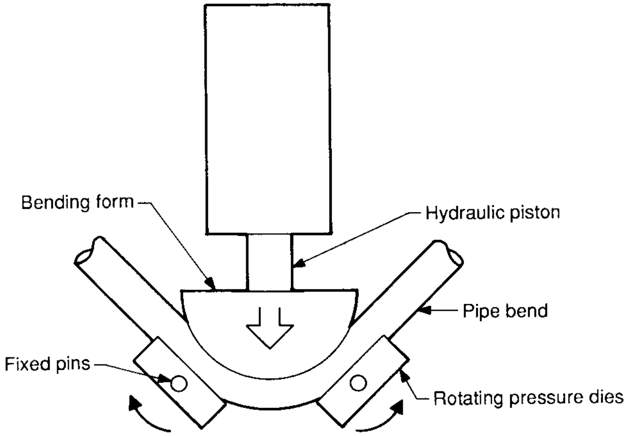

FIGURE A6.7 Ram bender.

In compression bending the pipe is clamped to a stationary bending die and wiped around it by a follower. As in all bends, the extrados thins and the intrados thickens or compresses. The degree of compression is greater than the thinning in this method. Compression bending is usually limited to heavier walls and larger bending radii. See Fig. A6.8 to compare compression and draw bending.

In rotary draw bending the pipe is clamped to a rotating bending form and drawn past a pressure die which is usually fixed. See Fig. A6.9. The degree of thinning of the extrados is greater than the compression of the intrados. This method permits bending of thinner wall pipe and tubes at smaller bending radii. To accommodate lighter walls and tighter radii it is often advisable to provide internal support to minimize flattening or buckling. Usually this takes the form of an internal mandrel. As the diameter-to-thickness ratio increases and the bending radius decreases, mandrels using follower balls are employed. See Fig. A6.10.

Roll bending is often used for coiling. One of its great advantages is that the bending radius is not dependent on a fixed radius die, and consequently there is great flexibility in choosing a bending radius. In roll bending three power-driven rolls, usually in pyramid form, are used. The pipe to be bent is placed between the

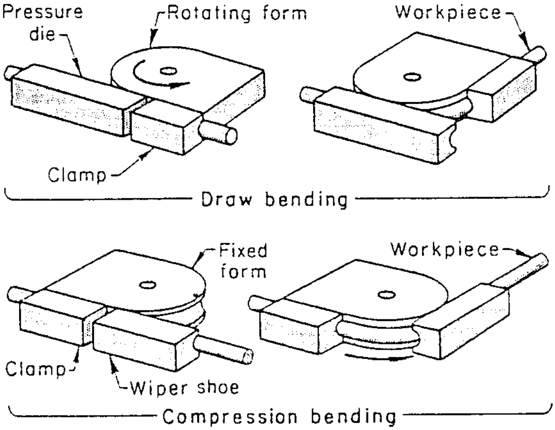
Pressure die
Rotating form
Workpiece
Clamp
Draw bending
Fixed form
Workpiece
Clamp
Wiper shoe
Compression bending

FIGURE A6.8 Comparison of the essential elements of draw bending and compression bending. (*Metals Handbook*[20])

two lower rolls and the upper roll. Bending is accomplished by adjusting the rolls relative to each other as necessary to attain the required diameter. See Fig. A6.11.

Pipe can also be cold bent on a bending table in the manner described for hot bending below, except that for ferritic materials the bending temperature is kept at least 100°F (56°C) below the lower critical.

A postbending heat treatment for cold bends may be advisable for some alloys, degree of deformation, certain service conditions, or when mandated by code.

2. *Hot bending:* In those cases where suitable cold bending equipment is unavail-

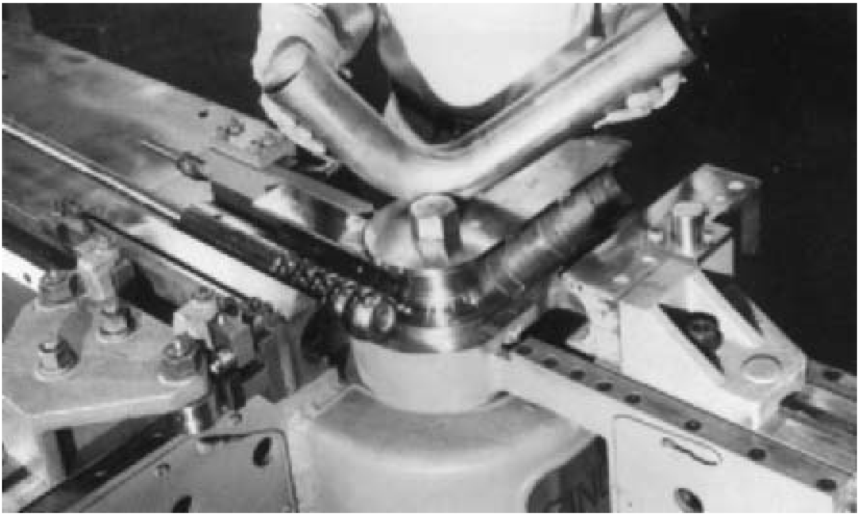

FIGURE A6.9 Tooling for a draw bend application. (*Teledyne Pines*)

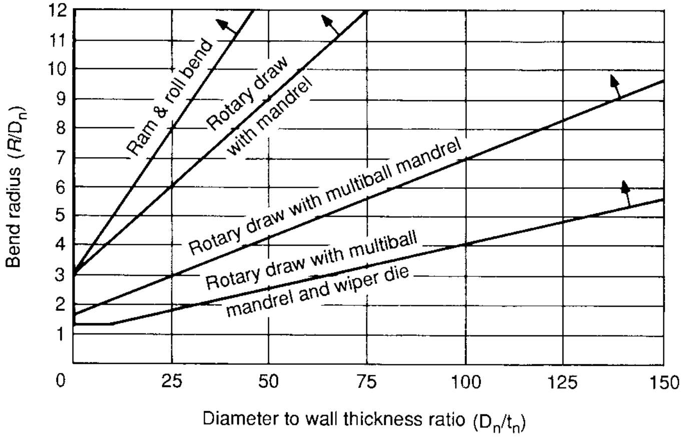

FIGURE A6.10 Cold bending ranges. (*Pipe Fabrication Institute PFI ES-24)*

able, hot bending may be employed. For hot bending of ferrous materials the pipe to be bent is usually heated to temperatures in the range of 1750 to 2050°F (954 to 1121°C). For austenitic materials these temperatures may introduce sensitization, and for ferritic materials they will exceed the critical temperature where metallurgical phase changes occur. See the section "Heat Treatment" for a discussion of these subjects.

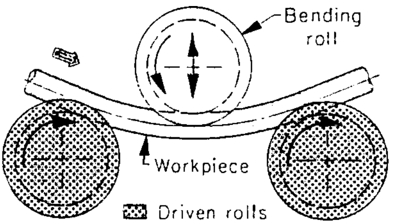

FIGURE A6.11 Operating essentials in one method of three-roll bending. (*Metals Handbook*[20])

The traditional method of hot bending is performed on a bending table. Depending on the diameter-to-thickness ratio, the pipe to be bent may be packed with sand to provide more rigidity and thus reduce the tendency for buckling. A rule of thumb is to sand fill if the diameter-to-thickness ratio is 10 to 1 or greater for 5-diameter bends. However, when the diameter-to-thickness ratio approaches 30 to 1, sand begins to lose its effectiveness, and buckles will appear. As the diameter of the pipe increases, the probability of buckling will increase since the sand fill will not expand in proportion to the pipe, leaving a void between the pipe and packing. It becomes pronounced around NPS 24 (DN 600).

After the pipe has been packed with sand, it is placed in a specially designed bending furnace. The furnace is usually gas fired through ports along its length, placed to direct the flames around the pipe and avoid direct flame impingement. The furnace is controlled by thermocouples or pyrometers to assure that the required bending temperature is attained but not exceeded. Depending on the length of arc to be bent, it may be necessary to make the bend in more than one heat.

After the segment to be bent has attained the required temperature throughout its thickness, the pipe is placed on the bending table. One end is restrained by holding pins and the other is pulled around by block and tackle powered by a winch. As bending progresses, the arc is checked against a bending template. Reposi-

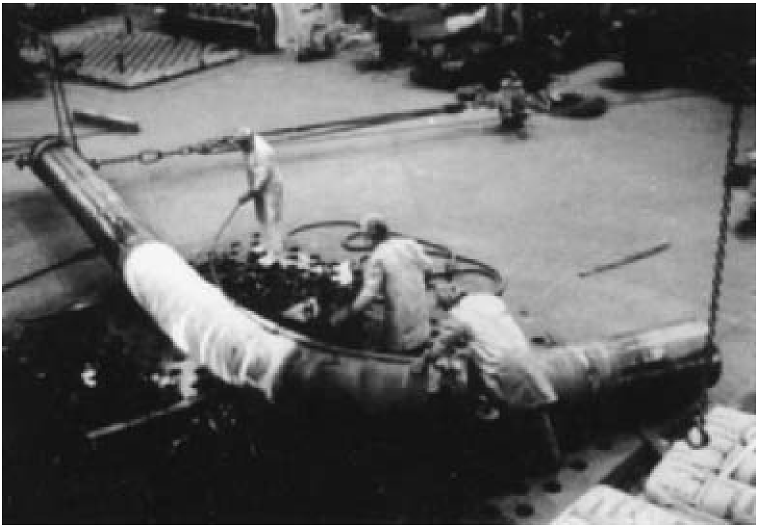

FIGURE A6.12 Hot bending on a table. (*Pullman Power Products Corporation*)

tioning of the holding pins may be necessary. See Fig. A6.12. For ferritic steels, it is recommended that the bending be completed above the upper critical temperature of the metal, usually about 1600 to 1725°F (870 to 940°C).

There are certain limits as to the combination of diameters, thicknesses, and bending radii which can be accommodated by the hot table bend method. PFI Standard ES-24 contains a chart of suggested limits for bend radius versus diameter to wall thickness ratios. See Fig. A6.13.

To fulfill the need for a bending process beyond the capabilities of hot table bending, the M. W. Kellogg Co. developed the increment bending process, which was further refined by Pullman Power Products Corp. In this process, one end of the pipe is fixed in an anchor box while a clamp connected to a hydraulic piston is attached to the other. A gas torch ring burner assembly is positioned at one end of the arc to be bent. The burner assembly is sized to heat a length of arc (increment) about 1 to 2 times the pipe wall thickness. The increment length is selected to be less than the buckling wave length of the pipe. The increment is then heated to bending temperature. Optical pyrometers are used to control the heating to assure that proper temperature is attained but not exceeded. At bending temperature the hydraulic piston pulls the clamped end a fixed amount to bend the heated increment. The increment is then water cooled, the torch ring moved to the next increment, and the process is repeated. As many as 350 increments may be required for a typical NPS 24 × ⅜-in (DN 600 × 9.5 mm), 90°, 5-diameter bend.

The process can produce bends in sizes from NPS 8 to 48 (DN 200 to 1200) with bending radii of 3 pipe diameters and larger in ferrous and nickel-alloy materials. Because the heat is applied from one side only, thicknesses are limited to 2 in (50 mm) and less.

In more recent years a more sophisticated piece of bending equipment has entered the pipe-bending field, notably the Induction Bender. In this process the increment to be bent is heated by an induction coil, and the bending operation is continuous. The pipe to be bent is inserted in the machine, and the start of the arc

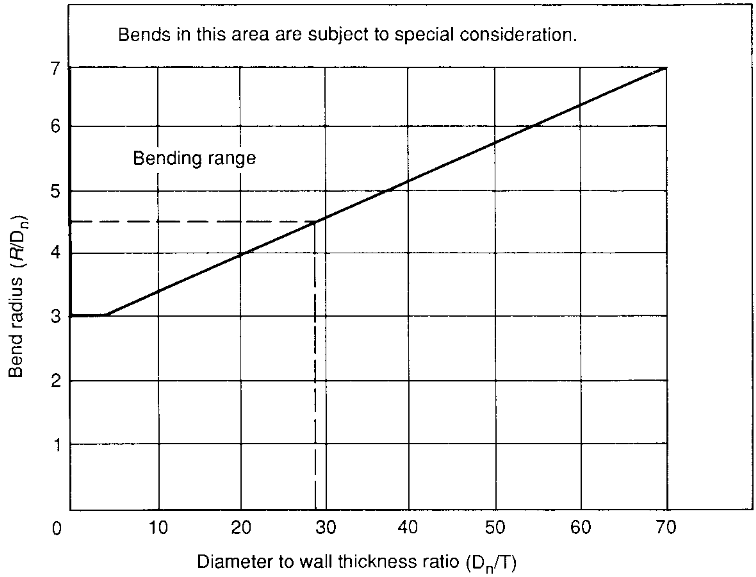

FIGURE A6.13 Limits for hot bending on a table. *(Pipe Fabrication Institute PFI ES-24)*

is positioned under the induction coil. The portion of the pipe upstream of the coil is clamped to a rotating arm fixed to the required bend radius. The downstream portion of the pipe is pushed hydraulically through the coil, where it attains bending temperature. Since it is clamped to the rotating arm, a bending moment is imposed on the pipe and it bends as it moves through the coil. As soon as it has been bent, the heated section is cooled to restore its prior rigidity. The permissible rate of cooling is a function of material composition. Low-carbon steels and some low Cr molys may be water quenched. It is recommended that the 9Cr-1Mo-V material be cooled in still air.

The Induction Bender is manufactured in several sizes depending on the expected combinations of pipe size and bending radius. These range from NPS 3½ to 64 (DN 80 to 1600) and from 8 to 400 in (DN 200 to 10,000 mm) in radius. Since induction is used as the heating method, wall thicknesses as heavy as 4 in (100 mm) can be bent. (See Fig. A6.14a and 6.14b.)

3. *Nonferrous pipe and tubes:* Although most of the equipment used to bend ferrous materials is also used for bending nonferrous materials, the details of bending do differ from those for ferrous materials and also vary between the several nonferrous materials themselves. Accordingly, it is wise to obtain specific procedural information from the materials' producers or from other reliable sources such as the latest edition of *The Metals Handbook.*[20] Certain nonferrous materials can be hot bent.

Aluminum and aluminum alloys can be bent cold using the same types of bending equipment used for ferrous materials. Alloys in the annealed condition are easiest to bend, but care is required in selecting tooling because of the low tensile strength and high ductility of these materials. Alloys with higher tempers and heat-treatable alloys require larger bending radii for satisfactory results. It is seldom necessary to

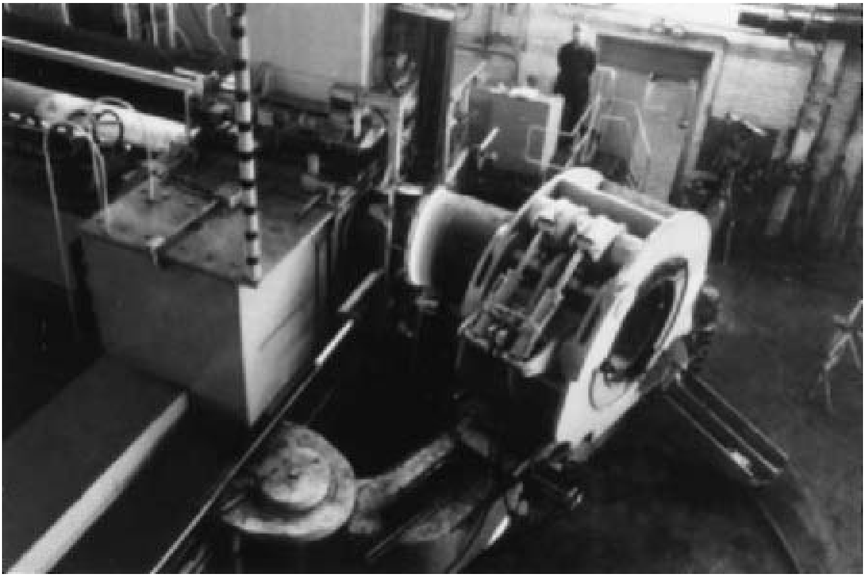

FIGURE A6.14a Induction bending. (*BendTec, Inc.*)

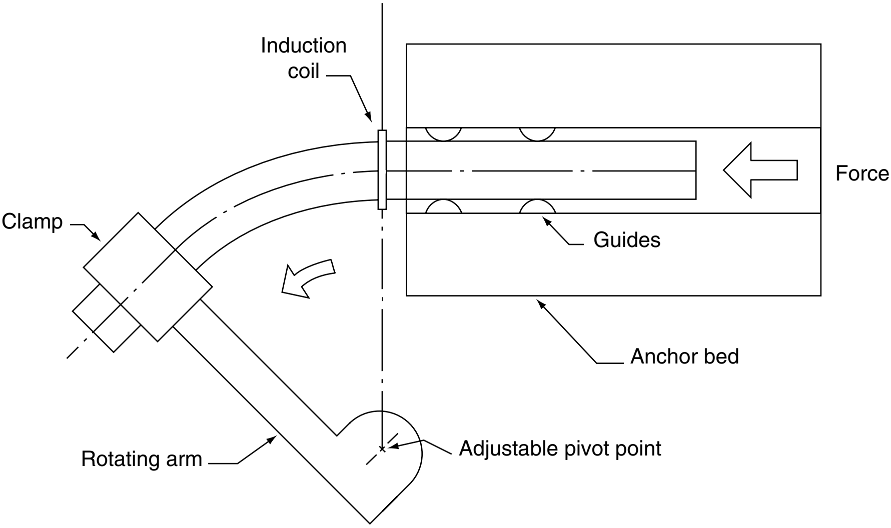
Induction coil
Force
Clamp
Guides
Anchor bed
Adjustable pivot point
Rotating arm

FIGURE A6.14b Induction bender.

TABLE A6.1 Temperature Range for Hot Bending of Copper and Copper Alloy Pipe and Tube

Material	Spec no.	Alloy	Temperature range (°F)
Copper deoxidized	SB-42, SB-75	C10200	1400–1600
Red brass	SB-43, SB-135	C23000	1450–1650
Copper silicon A	SB-315	C65500	1300–1600
70-30 CuNi	SB-466, SB-467	C71500	1700–2000
80-20 CuNi	SB-466	C71000	1600–1900
90-10 CuNi	SB-466, SB-467	C70600	1400–1800

Source: Adapted from ASME Boiler & Pressure Vessel Code 1995 ed., Section VIII Div. 1 Table NF-4.

heat aluminum for bending: however, non-heat-treated materials can be heated to 375°F (190°C) with minimal loss of properties, Heat-treated alloys require specific time-temperature control. More detailed information is available from the manufacturers of aluminum products.

Copper and copper alloy pipe and tube can be readily bent to relatively small radii. Although copper can be bent hot, the vast majority is done cold. For draw bending an internal mandrel is required and for other methods internal support is recommended. For very tight radii a snug-fitting forming block and shoe which practically surround the pipe at the point of bending are needed to preclude buckling.

Hot bending of copper and copper alloys particularly in larger diameters and walls is common. Pipes are usually sand-filled, and contoured bending dies are recommended. See Table A6.1. More information can be obtained from the Copper Development Association.[21]

Nickel and nickel-alloy pipe can be cold bent with the same type of bending equipment used for ferrous materials. Use of material in the annealed condition is preferred. For bends with radii 6 diameters and less, filler material or internal mandrels are required. Draw bending with internal mandrels is the preferred method for close-radius bending. Galling can become a problem, and chromium-plated or hard bronze-alloy mandrels should be used.

Nickel and nickel alloys can be hot bent using the same practices as for ferrous steels. Sand filling is appropriate. Care should be taken to assure that the sand and heating fuel are low in sulfur and that any marking paints or crayons or lubricants have been removed. These materials can be bent over a wide temperature range. See Table A6.2. The best bending is usually between 1850 and 2100°F (1010 to 1149°C). Other nickel alloys may exhibit carbide precipitation and should not be worked in the sensitization range. Postbending heat treatment may be required. For more information contact nickel product manufacturers such as Huntington Alloys.[22]

Titanium can be bent using draw bending equipment. However, those parts of the equipment which will wipe against the inner and outer surfaces of the pipe should be of aluminum bronze to minimize galling. For better formability, the pipe, the pressure die, and the mandrel should be heated to a temperature between 350 and 400°F (177 and 204°C). Unalloyed titanium can be hot worked in the temperature range of 1000 to 1400°F (538 to 760°C). Titanium alloy grade 12 requires a temperature range of 1400 to 1450°F (760 to 788°C). Heat treatment of titanium is recommended after forming. This is usually a furnace treatment at 1000 to 1100°F (538 to 593°C) for a minimum of ½ h for the unalloyed grades and 1 h for the alloy

TABLE A6.2 Temperature Range for Hot Bending of Nickel and Nickel Alloy Pipe and Tube

Material	Spec. no.	Alloy	Temperature range (°F)
Nickel	SB-161	N02200	1200–2300
Low carbon nickel	SB-161	N02201	1200–2300
Nickel-copper	SB-165	N04400	1700–2150
Ni-Cr-Fe	SB-167, SB-517	N06600, N06690	1850–2300
Ni-Fe-Cr	SB-407, SB-514	N08800, N08810	1850–2200

Source: Adapted from ASME Boiler & Pressure Vessel Code, 1995 ed., Section VIII Div. 1 Table NF-4.

(grade 12). Prolonged exposure to temperatures in excess of 1100°F (593°C) will result in heavy scaling and require some type of descaling treatment.

Other Forming Operations. Some additional forming operations which can be performed in a pipe shop are extrusion, swaging, and lapping. Extrusions involve forming outlets in pipe by pulling or pushing a hemispherical or conical die from the inside of the pipe through an opening in the wall. The work may be done hot or cold depending on the characteristics of the material. Ferritic steels, austenitic steels, and nickel alloys are usually formed hot; aluminum and copper are usually formed cold. In order to assure that the outlet will have sufficient reinforcement, it is necessary to increase the wall thickness of the header as a function of the outlet size desired. An increase of 30 percent may be needed for large outlet-to-header ratios.

Swaging involves the size reduction of pipe ends by forging, pressing, or rolling operations. The operation is usually used to produce reductions of one to two pipe sizes. Ferritic steels, austenitic steels, and nickel alloys are usually formed hot. Aluminum and copper are formed cold.

In lapped joints, a loose flange is slipped over the end of the pipe which is then heated to forging temperature, upset, and flared at right angles to the pipe axis. After heat treatment and cooling, the lapped section is machined on the face to attain a good gasket surface and on the back for good contact with the flange. The finished thickness of the lapped flange should be equal to or exceed the thickness of the pipe.

Layout, Assembly, and Preparation for Welding. In fabrication shops, piping subassemblies are often assembled on layout tables. A projection of the subassembly is laid out on the table in chalk. This establishes the baseline for locating the components and terminal dimensions of the subassembly, and the components are assembled relative to the layout. Prior to fit-up, it is essential that all weld surfaces be properly cleaned of rust, scale, grease, paint, and other foreign substances which might contaminate the weld. If moisture is present, the weld joint should be preheated. For alloy steels the heat-affected zone (HAZ) which results from thermal cutting should be removed by grinding or machining.

Depending on the configuration of the subassembly and root opening required by the welding procedure, some allowance may be required for weld shrinkage in the longitudinal direction. Actual shrinkage is difficult to predict and can vary considerably because of the many variables involved. For most open butt and backing ring joints, one-half the root opening is a reasonable allowance. For joints with other root configurations it may be as little as 1⁄16 in (2.0 mm) for the lighter walls, increasing to as much as 5⁄32 in (8 mm) for walls 4 to 5 in (100 to 127 mm) thick.

Each weld joint should be carefully aligned within required tolerances using alignment fixtures, spacers, or jigs if necessary. Poor alignment may result in a poor weld. Once alignment is attained, the joint is usually tack-welded to maintain the alignment. The process used for tacking is usually that being used for the root-pass weld. Numbers and size of tacks should be kept to a minimum, but if the subassembly is to be moved elsewhere for weld out, their size must be sufficiently large so as not to crack during the moving operation. Temporary lugs or spacer bars may also be used for this purpose provided they are of a compatible material, the temporary welds are removed, and the surface examined after removal to assure sound metal. Tack welds made by the shielded metal are welding (SMAW) or gas metal arc welding (GMAW) processes at the root of a weld should be removed or ground smooth since they can become a source of lack of fusion. For gas tungsten arc (GTAW) root welds, tacks usually fuse the adjacent lands to each other or to the insert, and filler metal is often not used. Tack welds are then fused into the weld during the root pass without further preparation. After tacking, the recommended practice is to complete the root pass and one or more weld out passes before starting to complete the weld by other processes to avoid burning through the relatively thin root.

Welding. Welding constitutes the bulk of the work involved in fabrication of modern piping systems, so it is essential for all involved to have a good working knowledge of this subject.

Procedure and Personnel Qualifications. All of the ASME Boiler and Pressure Codes and most of the ASME B31 Pressure Piping Codes reference ASME Section IX for the requirements for qualifying welding procedures and welding personnel. The ASME B31.4,[23] B31.8,[24] and B31.11[25] Codes also permit qualification to API-1104,[26] published by the American Petroleum Institute. ASME B31.5[27] permits qualification to AWS D10.9.[28]

The purpose of procedure qualification is to assure that the particular combination of welding process, base metal, filler material, shielding fluxes or gases, electrical characteristics, and subsequent heat treatment is capable of producing a joint with the required chemical and physical characteristics.

The purpose of personnel qualification is to assure that the welder or welding machine operator is capable of performing the operation in accordance with a qualified procedure in the required position.

Procedure Qualification. ASME Section IX requires the preparation of a Welding Procedure Specification (WPS), which lists the various parameters to be used during welding. When each WPS is qualified, the parameters used in the qualification are recorded in a Procedure Qualification Record (PQR).

For each type of welding process, ASME Section IX has established a series of variables. These are base metal, filler metal, position, preheat, postweld heat treatment, shielding gases, joint configuration, electrical characteristics, and technique. Base metal must not only be considered from a chemical and physical properties point of view, but in piping, the diameter and thickness of the test coupon limits the qualification to certain sizes. Differing fluxes, use of solid or gaseous backing, and single- or multipass techniques are some of the other variables which must be considered. Careful study of Section IX, AWS D10.9, or of API 1104 as may be applicable is in order.

The variables for welding are classed as essential, supplementary essential, and nonessential. The manner in which the variables are classed can vary depending on the welding process. That is, what may be classed as an essential variable for one may be a nonessential variable for one another. For a given process, each combination of essential variables must be qualified separately. A change in any one of them requires a new qualification.

When welds must meet certain fracture toughness requirements, the supplementary essential variables become essential and the procedure must be requalified for the particular combination of essential and supplementary essential variables.

Nonessential variables do not require requalification but should be referenced in the WPS.

Personnel Qualification. The fabricator and/or installer must qualify each welder or welding operator for the welding processes to be used during production welding. The performance qualification must be in accordance with a qualified WPS. Each performance qualification is also governed by a series of essential variables which are a function of the welding process for which the welder is being qualified.

The welder or welding operator may be qualified by mechanical tests or in some cases by radiographic examination of the test coupon. The record of each performance qualification is kept on a Welder/Welding Operator Performance Qualification (WPQ). Under ASME Section IX rules, a qualified welder who has not welded in a specific process within a specified period of time must be requalified for that process. API 1104 and AWS D10.9 have similar requalification provisions.

Welding Processes. Currently the most commonly used welding processes for fabrication of piping are SMAW, submerged arc welding (SAW), GTAW, GMAW, and flux core arc welding (FCAW). Some special applications may involve plasma arc welding (PAW) or electron beam welding (EBW), but their application to piping is still rare. However, any welding process which can be qualified under the requirements of ASME Section IX is acceptable. Detailed descriptions of these various processes and their variations may be found in the *Welding Handbook*.[16] This section will limit discussion to their application to piping.

For shop work, the best efficiency in all welding processes is attained when the pipe axis is horizontal and the piece is rotated so that welding is always done in the flat position. This is referred to as the 1G position. Other positions are 2G (pipe vertical and fixed, weld horizontal); 5G (pipe horizontal and fixed, weld a combination of flat, vertical, and overhead); and 6G (pipe inclined at 45° and fixed). See ASME Section IX.

Shielded Metal Arc Welding. SMAW has been the mainstay for pipe welding for many years, but it is rapidly being displaced by newer, more efficient processes. It is a process where an arc is manually struck between the work and a flux-coated electrode which is consumed in the weld. The core wire serves as the filler material, and the flux coating disintegrates to provide shielding gases for the molten metal, scavengers, and deoxidizers for the weld puddle and a slag blanket to protect the molten metal until it is sufficiently cool to prevent oxidation. It can be used in all positions, for upward or downward progression, and for root pass welding depending on the flux composition. Each weld pass is about ⅛ in thick, and before subsequent passes are made the slag must be removed and the surface prepared by removing irregularities which could entrap slag during subsequent passes.

Submerged Arc Welding. Unlike SMAW, SAW is an automatic or semiautomatic process. For circumferential welds in pipe the welding head is fixed for flat welding and the work is rotated under the head (1G position). It is used most efficiently in groove butt welds in heavy wall materials with pipe sizes NPS 6 (DN 150) and larger. The arc is created between the work and a bare solid wire or composite electrode which is consumed during the operation. The electrode comes in coils. Shielding is accomplished by a blanket of granular, fusible material called a *flux* which covers the arc and molten metal by forming a slag blanket to prevent oxidation of the molten metal until it has sufficiently cooled. Particular wire-flux combinations are required to assure that the deposited weld has the needed chemical and physical properties. This process has the greatest deposition rate and accordingly is the preferred process wherever possible. Because of the high heat input, care must be taken to assure that the interpass temperature is controlled to minimize sensitization in austenitic stainless steels or loss of notch toughness in ferritic steels. High heat input can also result in excessive penetration, so this process cannot be used effectively for root pass welding unless the root is deposited against a backing ring or sufficient backing is provided by two or more weld passes made by the shielded metal arc or a gas-shielded arc process.

Gas Shielded Arc Welding. The term *gas-shielded arc welding* applies to those welding processes where the arc and molten metal are shielded from oxidation by some type of inert gas rather than by a flux.

1. *Gas tungsten arc welding:* GTAW is a form of gas-shielded arc welding where the arc is generated between the work and a tungsten electrode which is not consumed. The filler metal must be added from an external source, usually as bare filler rod or preplaced consumable insert. The filler metal is melted by the heat of the arc, and shielding gases are usually argon or helium. Alloying elements are always in the filler material. GTAW is considered to be the most desirable process for making root welds of highest quality. Techniques using added filler metal or preplaced filler metal as inserts are equally effective in manual and automatic applications.

Automatic versions can be used in all positions provided sufficient clearance is available for the equipment. Automatic versions also require tighter fit-up requirements since the equipment is set to specific parameters and will not recognize variations outside of these limits, such as a welder would do in manual applications.

In automatic GTAW, the welding head orbits the weld joint on a guide track placed on the pipe adjacent to the joint to be welded. The welding head contains motors and drive wheels needed to move the head around the track, a torch to create the arc, and a spool of filler wire. Welding current, voltage, travel speed, wire feed rate, and oscillation are controlled from an external source. These parameters may be varied by the operator as the welding head traverses the weld. Oscillation and arc energy can be adjusted to permit greater dwell time and heat input into the side walls. Automatic GTAW welds are usually deposited as a series of stringer beads to minimize the effects of high interpass temperature.

2. *Gas metal arc welding:* GMAW is a type of gas-shielded welding generally used in the manual mode but adaptable to automation. The filler wire is the electrode and is furnished in coils or spools of solid wire. Is is fed automatically into the joint, melted in the arc, and deposited in the weld groove. Alloying elements arc in the wire, and shielding gas may be argon, helium, nitrogen, carbon dioxide, or combinations thereof, depending on the application.

Depending on the equipment and the heat input settings, filler metal can be transferred across the arc is several modes. In *short-circuiting transfer*, the electrode actually touches the work where it short-circuits, melts, and restarts the arc. This process has low heat input and accordingly low penetrating power. It can often result in lack of fusion. Because of the low heat input, however, it can be effectively used for open-butt root pass welding.

In *spray transfer*, the heat input parameters are sufficiently high to transfer the molten electrode across the arc as small droplets. Argon or argon-rich gases are used for shielding, resulting in a very stable spatterfree arc. Because of the high arc energy, it is normally used in the flat (1G) position. For all-position welding, a procedure which superimposes high amplitude pulses of current on a low-level steady-state current at regular intervals is often used. This results in a discrete transfer of metal with lower heat input needed for all-position welding.

3. *Flux core arc welding:* FCAW is a variation of GMAW where a composite electrode is substituted for the solid wire. The electrode is a tubular wire containing a flux material. Depending on the application, the arc may be self-shielding, or shielding gases may be used. Because of its high deposition rate this process is rapidly being developed for shop and field welding of piping.

Base Metal. Base metal is one of the essential variables for welding qualification. Because there are so many base metals to be welded, ASME Section IX has established a system of P Numbers and Group Numbers. Each base metal is assigned to a specific P Number depending on characteristics such as composition, weldability, and mechanical properties. Each P Number is further subdivided into Group Numbers depending on fracture toughness properties. See Table A6.3. When a procedure is qualified with a base metal within a particular P Number, it is also qualified for all other base metals within that P Number. When fracture toughness is a requirement, qualification is limited to base metals within the same P Number *and* Group Number. For example: A 106 Gr. B pipe is P No. 1 Gr. No. 1, while an A 105 flange is P No. 1 Gr. No. 2. Since both are P No. 1, qualification on either qualifies both when fracture toughness is not a factor. However, should fracture toughness become a requirement, a separate qualification would be required for each to itself and to each other.

Filler Metals. Electrodes, bare wire, wire-flux combinations, and consumable inserts which form a part of the finished weld are classed as filler materials. Most are covered by AWS and ASME specifications. See ASME Section II Part C.[29]

When the filler material is part of the electric circuit, it is designated as an

TABLE A6.3 ASME P Numbers and Group Numbers for Some Typical Piping Materials

Nominal composition	P No.	Group No.
Carbon Steel—65 ksi & under	1	1
—65 ksi to 75 ksi	1	2
C-½Mo & ½Cr-½ Mo—65 ksi & under	3	1
—70 ksi to 75 ksi	3	2
1Cr-½Mo & 1¼Cr-½ Mo-Si	4	1
2¼Cr-1Mo	5A	1
5Cr-½Mo, & 9Cr-1Mo	5B	1
9Cr-1Mo-V	5B	2
Type 304 & 316 Stainless	8	1
Type 309 & 310 Stainless	8	2
3½ Ni Steel	9B	1
Al & Al alloys	21 thru 25	—
Cu & Cu alloys	31 thru 35	—
Ni & Ni alloys	41 thru 47	—

Source: Selected from ASME Boiler & Pressure Vessel Code Section IX, 1995 ed.

electrode. If it is fed externally and melted by the heat of the arc, it is designated as a rod. Coated electrodes for SMAW come in straight lengths. Bare rods for GTAW come in straight lengths or spools. Electrode wire for GMAW and SAW are in spools or coils, while composite electrodes for FCAW are in spools.

Each specification incorporates a system of identification so that the filler materials manufactured by different suppliers which have equivalent characteristics are identified by the same number.

For qualification purposes, they are classified in ASME Section IX with F Numbers and A Numbers. Changes in filler metal from one F Number or A Number to another require requalification.

One of the problems associated with coated electrodes for SMAW is the introduction of hydrogen into the arc atmosphere and finished weld, resulting in hydrogen-induced cracking. To minimize this problem, low-hydrogen-type coatings are used, but these can absorb moisture from the atmosphere. Once a sealed can of electrodes is opened, the electrodes should be stored in an oven at about 250 to 350°F (120 to 175°C) or other temperature recommended by the manufacturer. Once removed from the oven, low-hydrogen electrodes should be maintained at 175°F (80°C) minimum until consumed. Baking to remove moisture is recommended for electrodes which have been out of the oven for several hours. Refer to the manufacturers' recommendations.

A problem associated with welding of fully austenitic stainless steel is microfissuring. To combat this problem the chemical composition of the filler material is adjusted to produce a weld deposit with small amounts of ferrite. ASME III requires that filler materials used in welding austenitic stainless steels contain a minimum of 5 percent ferrite. Ferrite, however, can be a problem at cryogenic and high temperatures. For cryogenic services the weld metal may not possess the fracture toughness capabilities of the base metal, and the ferrite content should be kept as low as possible. Alternatively, fully austenitic fillers may be required, but these are more crack-sensitive. For very high temperatures ferrite in the weld may convert to a brittle phase called *sigma.* For this reason applications over about 800°F (427°C) usually require a minimum of 3 percent ferrite for weldability but not exceeding 7 percent to minimize sigma formation.

Preheat and Interpass Temperature. Ferritic materials undergo metallurgical phase changes when cooling from welding to ambient temperature. Mild steels which contain no more than 0.20 percent carbon and 1 percent manganese can be welded without preheat when the thickness is 1 in (25 mm) or less. However, as the chemical composition changes by increases of carbon, manganese, and silicon or the addition of chromium and certain other alloying elements, preheating becomes increasingly important since the higher carbon and chrome molybdenum steels can develop more crack-sensitive martensitic, matensitic-bainitic, and other mixed phase structures when cooled rapidly from welding temperatures.

There is also a potential for hydrogen from SMAW electrode coatings or from moisture on the base metal surface to be dissolved in the weld. Also as the weld cools, stresses caused by shrinkage are imposed on the parts and distortion can result; and as thickness increases, thermal shock from the heat of welding can induce cracking more readily.

Preheating prior to welding is a solution to most of these problems. Preheating slows the cooling rate of the weld joint and results in a more ductile metallurigical structure in the weld metal and HAZ. It permits dissolved hydrogen to diffuse more readily and helps to reduce shrinkage, distortion, and possible cracking caused by the resultant residual stresses. It raises the temperature of the material sufficiently high to be above the brittle fracture transition zone for most materials.

The codes vary regarding preheat requirements. Some have mandatory require-

TABLE A6.4 Typical Preheat Requirements

P No.	Temp. (°F)	Composition/thickness limits
1	175	For *both* a max. specified carbon content >0.30% *and* thickness >1 inch.
	50	For all others.
3	175	For *either* a min. specified tensile strength >60 ksi, *or* thickness >½ in.
	50	For all others.
4	250	For *either* a min. specified tensile strength >60 ksi, *or* thickness >½ in.
	50	For all others.
5A and 5B	400	For *either* a min. specified tensile strength >60 ksi, *or both* a min. specified Cr content >6.0% *and* thickness >½ in.
	300	For all others.
6	400	For all materials.
7	50	For all materials.
8	50	For all materials.
9A	250	For all materials.
9B	300	For all materials.
10I	300	With a max. interpass temperature of 450°F.

Source: ASME B31.1 1995 ed.

ments while others give suggested levels. For example, for carbon steel welding, the B31.1 Code *requires* preheating to a temperature of 175°F (80°C) when the carbon content exceeds 0.30 percent *and* the thickness of the joint exceeds 1 in. B31.3 *recommends* preheating to 175°F (80°C) when the base metal specified strength exceeds 71 ksi *or* the wall thickness is equal to or greater than 1 in (25 mm). ASME III Section *suggests* a preheat of 200°F (95°C) when the maximum carbon content is 0.30 percent or less *and* the wall thickness exceeds 1½ in for P No. 1 Gr. No. 1, or 1 in (25 mm) for P No. 1 Gr. No. 2. It also suggests a 250°F (120°C) preheat for materials with carbon in excess of 0.30 percent and wall thicknesses exceeding 1 in (25 mm). The ASME B31.4 and B31.8 Codes require preheat based on carbon equivalents. When the carbon content (by ladle analysis) exceeds 0.32 percent, or the carbon equivalent (C + ¼ Mn) exceeds 0.65 percent, preheating is required. The reader is advised to consult the specific codes for preheating requirements. See Table A6.4 for some typical preheat requirements.

It should be noted that for the 9Cr-1Mo-V (P No. 5B Gr. 2) material some manufacturers suggest a preheat of 350°F (177°C) for GTAW and 400 to 450°F (204 to 232°C) for other types of welding regardless of thickness.

While it is preferred that preheat be maintained during welding and into the postweld heat treatment cycle without cooling, this may not always be practical. The B31.1 Code permits slow cooling of the weld to room temperature provided the completed weld deposit is a minimum of ⅜ in (9.5 mm) or 25 percent of the final thickness, whichever is less. For P No. 5B and P No. 6 materials some type of intermediate stress relief is required.

For the 9Cr-1Mo-V material it is recommended that the finished weld be heated to 500°F (260°C), held at that temperature for 2 hours, and allowed to cool slowly in still air by wrapping it with insulating material.

Too much heat during welding can also be a problem. Where notch toughness is a requirement, prolonged exposure to temperatures exceeding 600°F (316°C) can temper the base metal. Controlling the interpass temperature is required to minimize this problem. Interpass temperature control means allowing the temperature of the joint to cool below some specified level before the next pass is deposited.

Because of its martensitic structure, a maximum interpass temperature of 600°F (316°C) should be observed when welding 9Cr-1Mo-V material.

In welding of austenitic stainless steels, sensitization of the base metal HAZ will result from the heat and welding. Here the solution is to weld with as low a heat input as possible at the highest possible speed to minimize the precipitation of carbides (sensitization). A maximum interpass temperature of 300 to 350°F (149 to 177°C) is usually employed.

Weld Joint Design

Butt Welds. A butt joint is defined as one in which the members being joined are in the same plane. The circumferential butt joint is the most universally used method of joining pipe to itself, fittings, flanges, valves, and other equipment. The type of end preparation may vary depending on the particular preferences of the individual, but in general the bevel shape is governed by a compromise between a root sufficiently wide to assure a full-penetration weld but not so wide as to require a great deal of filler metal.

In the shop, the inside surface of large-diameter pipe joints is often accessible. In this case the joint is most often double-welded (welded from both sides), and a double V bevel is used. For heavier walls, machined double U bevels can be used. However, the vast majority of piping butt welds must be made from one side only. For this situation the most frequently specified shapes are the V bevel, compound bevel, and U bevel, all of which can have varying angles, lands, and tolerances. See Fig. A6.15. Recent advances in SAW narrow-gap welding as applied to piping butt welds have cut the volume of filler metal significantly in pipe walls that are 2 in (51 mm) and thicker. The 30 or 37½° (60 or 75° included angle) V bevel is most often performed integrally with the cutting operation by machine, oxyfuel gas, or arc cutting. Other bevel shapes such as the compound V, U, J bevels, or combinations thereof require machining in lathes or boring mills.

1. *Alignment:* Alignment for butt welding can often be a frustrating task since it is influenced by the material; pipe diameter, wall thickness, out-of-roundness tolerances; welding process needs; and design requirements.

When a joint can be double welded, the effects of misalignment are minimized since both inner and outer weld surfaces can be blended into the base metal, and any remaining offsets can be faired out. ASME Section III gives a table of allowable offsets due to misalignment in double-welded joints. See Table A6.5. All resulting offsets must be faired to a 3:1 taper over the finished weld.

For single-welded joints alignment can be more difficult, since the inside surface is not accessible. The degree of misalignment is influenced by many factors and depending on the type of service application may or may not be significant. The various codes impose limits on inside-diameter misalignment. This is to assure that the stress intensification resulting from the misalignment is kept within a reasonable value. The B31.1 Code requires that the misalignment between ends to be joined not exceed 1⁄16 in (2.0 mm), unless the design specifically permits greater amounts. See Fig. A6.16. The B31.4 and B31.8 Codes do not require special treatment unless the difference in the nominal walls of the adjoining ends exceeds 3⁄32 in (2.5 mm).

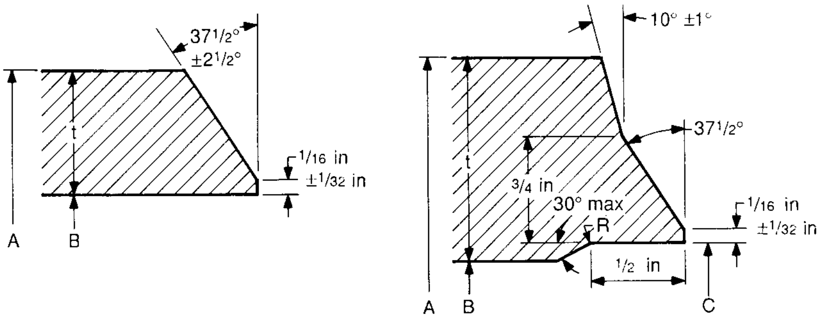
37½°
±2½°
t
1/16 in
±1/32 in
A
B
10° ±1°
37½°
t
¾ in
30° max
R
1/16 in
±1/32 in
½ in
A
B
C

(*a*) Walls ≦ 1 in (*b*) Walls ≥ 1 in

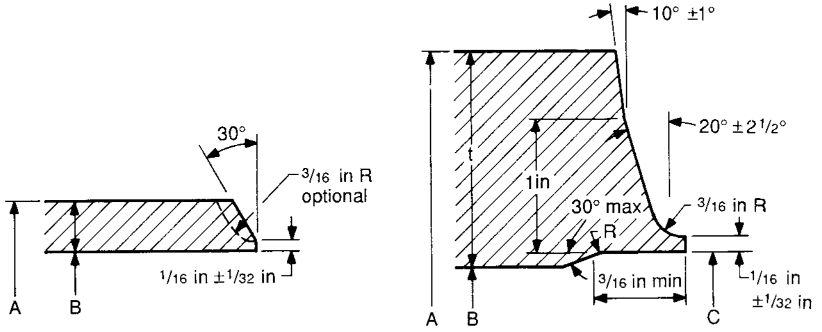
30°
3/16 in R
optional
1/16 in ±1/32 in
A
B
10° ±1°
20° ±2½°
t
1in
30° max
R
3/16 in R
3/16 in min
1/16 in
±1/32 in
A
B
C

(*c*) GTA root – walls > ⅛ to ⅜ in (*d*) GTA root – walls > ⅜ in

FIGURE A6.15 Typical weld end bevels. (*a*) Walls ≤ 1 in; (*b*) walls > 1 in; (*c*) GTA root walls > ⅛ to ⅜ in; (*d*) GTA root walls > ⅜ in.

ASME Section III on the other hand requires that the inside *diameters* of the adjoining sections match within 1/16 in (2.0 mm) to assure good alignment. Counterboring is usually required to attain this degree of alignment.

The welding process and NDEs to be employed also bear on misalignment limits. Some welding processes can tolerate fairly large misalignments while others, notably

TABLE A6.5 Maximum Allowable Offset in Joints Welded from Both Sides

	Direction of joints	
Section thickness (in)	Longitudinal	Circumferential
Up to ½, incl.	¼t	¼t
Over ½ to ¾, incl.	⅛ in	¼t
Over ¾ to 1½, incl.	⅛	3/16 in
Over 1½ to 2, incl.	⅛ in	⅛t
Over 2	Lesser of 1/16t or ⅜ in	Lesser of ⅛t or ¾ in

Source: ASME Boiler & Pressure Vessel Code Section III 1995 ed.

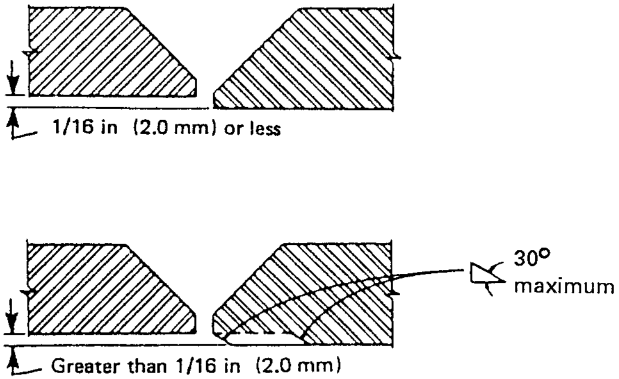

FIGURE A6.16 Butt welding of piping components with internal misalignment. (*ASME B31.1 Power Piping Code, 1995 ed.*)

gas tungsten arc root pass welding with and without consumable inserts require closer tolerances. See PFI ES-21.[30] Radiographic or ultrasonic examinations of misaligned areas may show unacceptable indications if the degree of misalignment is too great.

A review of the tolerances permitted in the manufacture of various types of pipe, fittings, and forgings immediately reveals that in many situations the probable inside diameter and wall thickness variations will produce unacceptable misalignment situations. Out-of-roundness in lighter wall materials can add to the problem.

When most of the pipe comes from the same rolling and the fittings from the same manufacturing lot, variations in tolerances are minimal and the pipe and fittings can be assembled for most common applications without a great deal of adjustment. Out-of-round problems in lighter walls are handled with internal or external round-up devices.

To assure that all components will be capable of alignment in the field, it is common practice for the designer to specify that the inside diameters of all matching components be machine counterbored to some specified dimension. This practice is also desirable for shop welding of heavier wall piping subassemblies. PFI ES-21 contains a set of uniform dimensions for counterboring of seamless hot-rolled pipe ordered to A106 or A335 by NPS and schedule number. See Table A6.6.

The C dimension is determined from the following equation:

$$C = A - \tfrac{1}{32}\text{ in} - 2 \times t_m - 0.010\text{ in}$$

where A = pipe outside diameter
$\tfrac{1}{32}$ in = pipe outside diameter under tolerance
t_m = mill minimum wall = $0.875t$
t = mill nominal wall
0.010 = a boring tolerance

This simplifies to:

$$C = A - 0.041 - 1.75t \text{ in} \qquad \text{(A6.2)}$$
$$C = A - 1.04 - 1.75t \text{ mm} \qquad \text{(A6.2M)}$$

The tolerance on C is $+0.010 - 0.040$ in ($+0.25$ mm, -1.02 mm).

TABLE A6.6 Internal Machining for Circumferential Butt Welds

Nominal pipe size	Schedule number or wall	Nominal O.D. *A* (in)	Nominal I.D. *B* (in)	Nominal wall thickness *t* (in)	Machined I.D. of pipe *C* tolerance +0.010, −0.040 (in)
3	XXS	3.500	2.300	0.600	2.409
4	XXS	4.500	3.152	0.674	3.279
5	160	4.500	4.313	0.625	4.428
	XXS	5.563	4.063	0.750	4.209
6	120	6.625	5.501	0.562	5.600
	160	6.625	5.187	0.719	5.327
	XXS	6.625	4.897	0.864	5.072
8	100	8.625	7.437	0.594	7.546
	120	8.625	7.187	0.719	7.327
	140	8.625	7.001	0.812	7.163
	XXS	8.625	6.875	0.875	7.053
	160	8.625	6.813	0.906	6.998
10	80	10.750	9.562	0.594	9.671
	100	10.750	9.312	0.719	9.452
	120	10.750	9.062	0.844	9.234
	140	10.750	8.750	1.000	8.959
	160	10.750	8.500	1.125	8.740
12	60	12.750	11.626	0.562	11.725
	80	12.750	11.374	0.688	11.507
	100	12.750	11.062	0.844	11.234
	120	12.750	10.750	1.000	10.959
	140	12.750	10.500	1.125	10.740
	160	12.750	10.126	1.312	10.413
14 O.D.	60	14.000	12.812	0.594	12.921
	80	14.000	12.500	0.750	12.646
	100	14.000	12.124	0.938	12.319
	120	14.000	11.812	1.094	12.046
	140	14.000	11.500	1.250	11.771
	160	14.000	11.188	1.406	11.498
16 O.D.	60	16.000	14.688	0.656	14.811
	80	16.000	14.312	0.844	14.484
	100	16.000	13.938	1.031	14.155
	120	16.000	13.562	1.219	13.827
	140	16.000	13.124	1.438	13.442
	160	16.000	12.812	1.594	13.171
18 O.D.	40	18.000	16.876	0.562	16.975
	60	18.000	16.500	0.750	16.646
	80	18.000	16.124	0.938	16.319
	100	18.000	15.688	1.156	15.936
	120	18.000	15.250	1.375	15.553
	140	18.000	14.876	1.562	15.225
	160	18.000	14.438	1.781	14.842

TABLE A6.6 Internal Machining for Circumferential Butt Welds (*Continued*)

Nominal pipe size	Schedule number or wall	Nominal O.D. *A* (in)	Nominal I.D. *B* (in)	Nominal wall thickness *t* (in)	Machined I.D. of pipe *C* tolerance +0.010, −0.040 (in)
20 O.D.	40	20.000	18.812	0.594	18.921
	60	20.000	18.376	0.812	18.538
	80	20.000	17.938	1.031	18.155
	100	20.000	17.438	1.281	17.717
	120	20.000	17.000	1.500	17.334
	140	20.000	16.500	1.750	16.896
	160	20.000	16.062	1.969	16.515
22 O.D.	—	22.000	20.750	0.625	20.865
	60	22.000	20.250	0.875	20.428
	80	22.000	19.750	1.125	19.990
	100	22.000	19.250	1.375	19.553
	120	22.000	18.750	1.625	19.115
	140	22.000	18.250	1.875	18.678
	160	22.000	17.750	2.125	18.240
24 O.D.	30	24.000	22.876	0.562	22.975
	40	24.000	22.624	0.688	22.757
	60	24.000	22.062	0.969	22.265
	80	24.000	21.562	1.219	21.827
	100	24.000	20.938	1.531	21.280
	120	24.000	20.376	1.812	20.788
	140	24.000	19.876	2.062	20.350
	160	24.000	19.312	2.344	19.859

Source: Pipe Fabrication Institute PFI ES-21.

For other types of seamless pipe, longitudinally welded pipe, forged and bored pipe, and other specialties, the tolerances on the outside diameter and wall thickness are different. The machining tolerance required for some welding processes may also be different. However, similar logic may be applied in determining *C* dimensions for these products. (See PFI ES-21.)

It should be noted from Table A6.6 that the tabulation applies to wall thickness greater than ½ in (12.7 mm). While one can calculate a *C* dimension for lighter walls, the combination of outside diameter tolerance and wall thickness tolerance will usually result in a calculated *C* which is often smaller than the actual bore of the pipe. The difference is most often relatively small, and the existing diameter will usually be suitable for alignment of most welds. In those cases where it is considered essential, the outside diameter at the end can be sized to provide stock for machining, but care is required to assure that the minimum wall is maintained. Where counterboring is used, the machined surface should taper into the existing inside surface at an angle of 30° maximum. See Fig. A6.17.

There are many instances where round-up devices and counterboring are insufficient remedies for misalignment. On occasion it may be necessary to expand the ends where counterboring would violate minimum wall requirements. Most of the codes permit the use of weld metal deposits (weld buildup) both on the inside and outside surfaces of the weld end in order to attain the required alignment. In

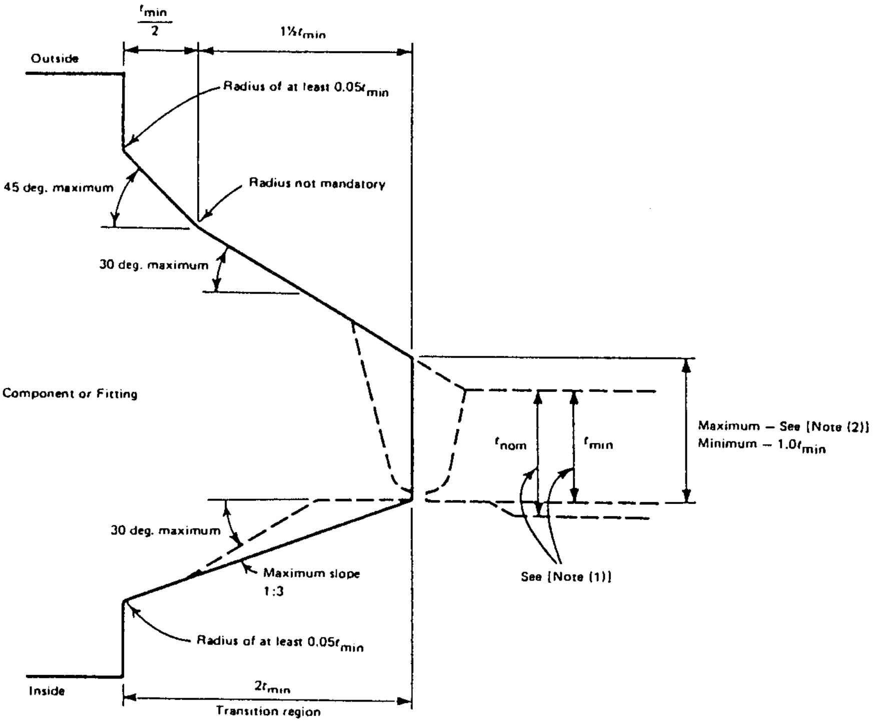
$\frac{t_{min}}{2}$
$1\frac{1}{2}t_{min}$
Outside
Radius of at least $0.05t_{min}$
45 deg. maximum
Radius not mandatory
30 deg. maximum
Component or Fitting
t_{nom}
t_{min}
Maximum – See [Note (2)]
Minimum – $1.0t_{min}$
30 deg. maximum
Maximum slope 1:3
See [Note (1)]
Radius of at least $0.05t_{min}$
Inside
$2t_{min}$
Transition region

GENERAL NOTES:
(a) Weld bevel is shown for illustration only
(b) The weld reinforcement permitted by NC-4426 may lie outside the maximum envelope.

NOTES:
(1) The value of t_{min} is whichever of the following is applicable:
  (a) the minimum ordered wall thickness of the pipe;
  (b) 0.875 times the nominal wall thickness of pipe ordered to a pipe schedule wall thickness which has an under tolerance of 12.5%;
  (c) the minimum ordered wall thickness of the cylindrical welding end of a component or fitting (or the thinner of the two) when the joint is between two components.
(2) The maximum thickness at the end of the component is:
  (a) the greater of t_{min} + 0.15 in. or $1.15t_{min}$ when ordered on a minimum wall basis;
  (b) the greater of t_{min} + 0.15 in. or $1.0t_{nom}$ when ordered on a nominal wall basis.

FIGURE A6.17 Welding end transitions—maximum envelope. (*ASME Boiler and Pressure Vessel Code, Sec. III, 1995 ed.*)

using this alternative, consideration must be given to other factors such as radial shrinkage, imperfections in the weld buildup which may show on NDE, need for pre- and postweld heat treatment, and possible sensitization of austenitic stainless steels.

2. *Unequal wall thickness:* In most piping systems there are components such as valves, castings, heavier header sections, and equipment nozzles which are welded to the pipe. In such instances the heavier sections are machined to match the lighter pipe wall and the excess thickness tapered both internally and externally to form a transition zone. Limits imposed by the various codes for this transition zone are fairly uniform. The external surface of the heavier component is tapered at an angle of 30° maximum for a minimum length equal to 1½ times the pipe minimum wall thickness and then at 45° for a minimum of ½ times the pipe minimum wall. Internally, either a straight bore followed by a 30° slope or a taper bore at a maximum slope of 1 to 3 for a minimum distance of 2 times the pipe minimum wall are required. See Fig. A6.17. The surface of the weld can also be tapered to accommodate differing thickness. This taper should not exceed 30°, although some codes limit the taper to 1 to 4. It may be necessary to deposit weld metal to assure that these limits are not violated.

Fillet Welds. Circumferential fillet welds are used in piping systems to join slip-on flanges and socket welding fittings and flanges to pipe. In welding slip-on flanges to pipe, the pipe is inserted into the flange and welded with two fillet welds, one between the outside surface of the pipe and the hub of the flange and the other between the inside surface of the flange and the thickness of the pipe. See Fig. A6.18. Alignment is relatively simple since the pipe fits inside the flange. The B31.1 Code requires that the fillet between the hub and the pipe have a minimum weld leg of 1.09 times the pipe nominal wall or the thickness of the hub, whichever is smaller. The weld leg of the front weld must be equal to the pipe nominal wall or ¼ in, whichever is smaller. The gap between the outside diameter of the pipe and flange inside diameter may increase with size, so the size of the fillet leg should be adjusted to compensate for this situation.

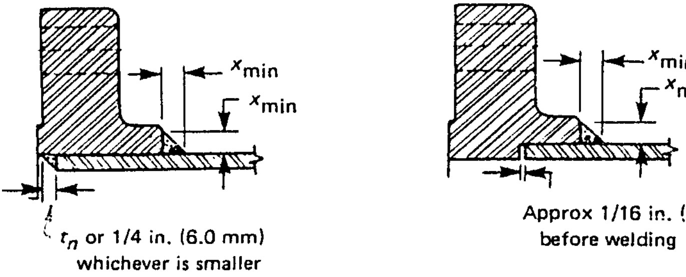
x_{min}
x_{min}
t_n or 1/4 in. (6.0 mm) whichever is smaller
x_{min}
x_{min}
Approx 1/16 in. (2.0 mm) before welding

t_n = nominal pipe wall thickness

x_{min} = 1.09t_n or thickness of the hub, whichever is smaller

FIGURE A6.18 Slip-on and socket welding flange welds. (*ASME B31.1, 1995 ed.*)

Fillet welds are also used for circumferential welding of pipe to socket fittings. Socket weld fittings and flanges are available in sizes up to NPS 4 (DN 100) but are most frequently used in sizes NPS 2 (DN 50) and smaller. Alignment is not a problem since the pipe fits into the fitting socket. Some codes require that the fillet have uniform leg sizes equal to 1.09 times the pipe nominal wall or be equal to the socket wall, whichever is smaller. In making up socket joints it is recommended that the pipe not be bottomed in the socket before welding. B31.1 and ASME Section III suggest a 1⁄16-in (2.0 mm) gap. In high-temperature service especially, the pipe inside the socket will expand to a greater degree than the socket itself, and the differential expansion may result in unwanted shear stress in the fillet and possible cracking during operation.

Intersection-Type Weld Joints. Intersection-type weld joints occur when the longitudinal axes of the two components meet at some angle. Such is the case where nozzle, lateral, and wye intersections are fabricated by welding. Weld joints in these cases may be butt, fillet, or a combination thereof. Nozzles are made either by *set-on* or *set-through* construction. In set-on construction, the opening in the header pipe is made equal to the inside diameter of the branch pipe. The branch pipe is contoured to the outside diameter of the header and beveled so that the weld is made between the outside surface of the header and through the thickness of the branch. The through thickness weld is covered by a fillet weld to blend it into the header pipe surface. In set-through construction an opening is cut in the header pipe equal to the outside diameter of the branch pipe and beveled. The branch pipe is contoured to match the inside diameter of the header. See Fig. A6.19. The weld is between the outside surface of the branch and through the thickness of the header and is covered with a fillet weld to blend it into the outside surface of the branch. Either type of construction is acceptable; the usual practice is to use set-on since the volume of required weld metal is less. However, when the header is

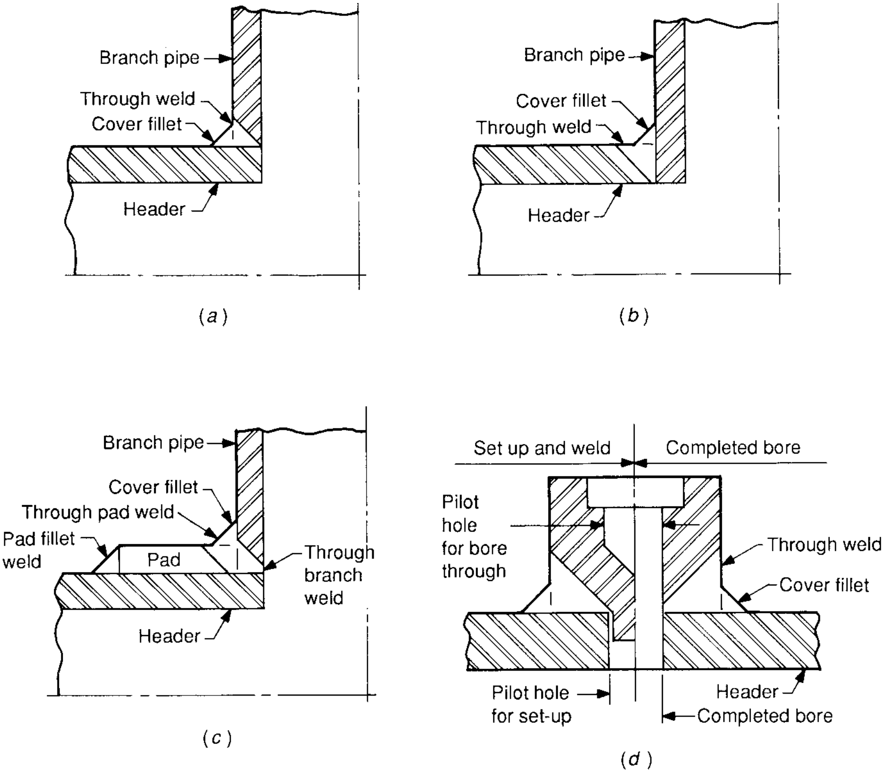
Branch pipe
Through weld
Cover fillet
Header
(a)
Branch pipe
Cover fillet
Through weld
Header
(b)
Branch pipe
Cover fillet
Through pad weld
Pad fillet weld
Pad
Through branch weld
Header
(c)
Set up and weld
Completed bore
Pilot hole for bore through
Through weld
Cover fillet
Pilot hole for set-up
Header
Completed bore
(d)

FIGURE A6.19 Types of branch nozzle construction. (*a*) Set-on; (*b*) set-through; (*c*) set-on with reinforcing pad; (*d*) special drill through socket weld coupling.

made from a plate product which may contain laminations, set-through construction is preferred.

Small nozzles are frequently made with socket welding or threaded couplings set on the header. In these cases it is difficult to assure complete root penetration, and specially designed couplings which permit drilling through the bore to remove the root of the weld are often used. See Fig. A6.19.

Welded-nozzle construction cannot be used at the full rating of the pipe involved, and suitability for particular pressure temperatures must be verified by component design methods found in Part B of this book. In all cases there must be a through thickness weld of the branch to the header. Where reinforcing pads are used, they should also be joined to the header by a weld through their thickness. See Fig. A6.19 for typical details. In designing headers with multiple outlet nozzles, sufficient clearance is needed between adjacent nozzles to provide accessibility for welding. Nozzles with reinforcing pads or flanges need greater clearance. PFI ES-7[31] gives suggested minimum spacings.

Root Pass Weldings. The integrity of any weld rests primarily with the quality of the root pass. In double-welded joints the root pass serves as a backing for passes welded from the first side. Before welding begins from the opposite side, the root area is usually removed to sound metal. In most cases, however, pipe welds must be made from one side only, and the inside surface of the root weld is not accessible for conditioning.

Backing Rings. The earliest solution to root pass welding was the use of a backing ring using the SMAW process. This usually assured good penetration and is still used for many applications. However, commercial rings used with nominal pipe dimensions may result in unwanted flow restriction, crevices for entrapment of corrosion products, and notch conditions which could result in cracking during service. Prior to the introduction of GTAW root welding, piping systems which required the highest possible quality were welded using counterboring of the pipe to close tolerances and machined backing rings. This reduced problems significantly, but the crack potential still remained. See PFI ES-1[32]

Open Butt Root Welds. In petrochemical services backing rings often could not be used, and the practice of open butt welding with shielded metal arc electrodes was and still is used. Welders require considerably more skill. Welding is most often performed with E-XX10 electrodes, which are more controllable than the low-hydrogen types but are also more prone to porosity.

GTAW Root Welds. The introduction of GTAW represented a breakthrough in root pass welding. Because of the greater expense involved, its application is usually limited to applications requiring high-quality root welds. The weld end bevels are carefully prepared by machining and counterboring where necessary to meet the close tolerances required. The joint involves butted or open lands, and the weld is made with filler metal added or with a preplaced consumable insert. The latter have a decided advantage in that they eliminate a good deal of the variability introduced by hand feeding of filler wire. Consumable inserts come in a variety of shapes, each requiring somewhat differing fit-up tolerances. See PFI ES-21. Some types can be used for root pass welding in lighter wall materials (½ in and less) without the need for counterboring. Depending on the service, the inside surface of the molten weld puddle is often shielded from oxidation by an inert gas inside the pipe contained between dams. See Fig. A6.20. A small, controlled, positive pressure on the backing gas can aid in better controlling the shape of the root inside diameter.

When the root pass is made by the GTAW process, the resulting finished weld is relatively thin. In depositing the second and third passes, the first pass may be

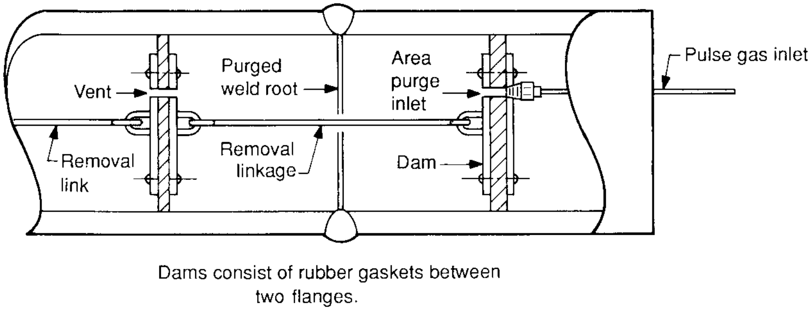

FIGURE A6.20 Typical shop purging arrangement.

remelted. As it resolidifies, it shrinks radially, resulting in a small concave depression on the inside of the weld. This condition is usually considered acceptable provided the resulting thickness through the finished weld is equal to or greater than the required minimum wall, and the concavity blends smoothly into the adjacent base metal.

GMAW Root Welds. Many fabricators and/or installers take advantage of the low penetrating power of GMAW in the short-circuiting mode to use it for open-butt root pass welding where the quality level of GTAW root pass welding is not required. The balance of the weld is made by other processes. Care must be taken to assure that unmelted wire does not penetrate the joint and remain.

Welding of Ferrous Piping Materials

Carbon Steels. Carbon steels are classed as P-No.1 by ASME Section IX. See Table A6.3. The vast majority of carbon steel pipe is used for services below 775°F (413°C). Joints are most often V bevels with commercial backing rings or open butt roots and are welded out with SMAW, SAW, GMAW, and FCAW. For services which require high quality, GTAW root welds with SMAW, SAW, and FCAW weld-outs are most prevalent. Most carbon steel filler metal is produced to weld 60,000- and 70,000-psi material. More often than not fabricators use the 70,000-psi filler for all carbon steel welding. For SMAW the most popular electrode is E-7018, although for open-butt root pass welding using SMAW, E-6010 is still the choice. FCAW welding is rapidly replacing SMAW because it can deposit at a much higher rate. Preheating and postweld heat treating are required depending on the carbon content and wall thickness. For typical preheat and postweld heat treatment requirements see Tables A6.4 and A6.7. When working to a specific code, be sure to use the requirements found in that code.

Carbon Molybdenum Steels. Carbon molybdenum steels are classed as P-No 3. Currently this material has very little use because of unfavorable experience with graphitization at temperatures over 800°F (427°C).

Chromium Molybdenum Steels. The chromium molybdenum steels are primarily used for service temperatures from 800 to 1050°F (427 to 565°C). They range from ½ Cr-½ Mo to 9 CR-1 Mo-V and are classed by ASME Section IX as P-No. 3, P-No. 4, and P-No. 5 A and 5 B. The preponderance of usage is in the 1¼ Cr-½ Mo-Si and 2¼ Cr-1 Mo grades. Welding usually consists of GTAW root welds with filler metal added or preplaced inserts. The balance of the weld is made by SAW for welds which can be performed in the 1G position and SMAW for fixed position welds. FCAW is rapidly overtaking SMAW for these materials also. See

TABLE A6.7 Some Typical Time and Temperature Cycles for Heat Treatment

P no.	Heating rate	Holding temperature range*				Minimum holding time at temperature	Cooling program
		SR or T	N	A	CST		
P-1	Above 800°F heat at a rate of 400°F/h divided by the thickness in inches but not faster than 400°F or less than 100°F	1100–1250°F	1600–1700°F	1500–1600°F	N/A	1 h/in of thickness but not less than 30 min or more than 2 h plus 15 min for each additional inch over 2 in	SR or T—Cool at 400°F/h divided by the thickness in inches but not faster than 400°F/h; need not be lower than 100°F/h down to 800°F N—Remove from furnace at normalizing temperature and cool in still air to 800°F; temper as necessary A—Furnace cool to 800°F at a rate of 400°F/h divided by the thickness in inches but not faster than 400°F/h; need not be slower than 100°F/h
P-3	Same as P-1	1100–1250°F	1600–1700°F	1500–1600°F	N/A		
P-4	Same as P-1	1300–1375°F	1725–1775°F	1625–1675°F	N/A	1 h/in of thickness but not less than 30 min or more than 5 h plus 15 min for each additional inch over 5 in	
P-5A & P-5B Gr.-1	Same as P-1	1300–1400°F	1725–1775°F	1625–1675°F	N/A		
P-8	Same as P-1	Not required	N/A	N/A	1900–2000°F	1 h/in of thickness but not less than 30 min or more than 2 h plus 15 min for each additional inch over 2 in	CST—Remove from furnace at holding temperature and quench in water to 300°F within 2 min

* SR = stress relief, T = temper, N = normalize, A = anneal, CST = carbide solution treatment

Source: Pullman Power Products Corporation.

Tables A6.4 and A6.7 for typical preheat and postweld heat-treatment requirements. Note that in B31.3 hardness limits are imposed to verify the adequacy of any heat treatment, and above-critical heat treatment may be necessary to attain the maximum hardness limit.

The 9Cr-1Mo-V material is a relatively recent addition to the list of chromium molybdenum steels for use in high-temperature service. Its great advantage over other chrome moly steels is its high-temperature strength. It has allowable stresses comparable with those of austenitic stainless steels. This results in a lesser wall thickness and consequently less weight to support and considerably less volume of filler material. A tighter line configuration can be anticipated because the lesser section modulous will result in smaller reactions at the terminals due to expansion loadings.

This material also has an advantage over austenitic stainless steels in that its coefficient of thermal expansion is less than that of the stainlesses, again resulting in lower end reactions for the same configuration.

On the down side, 9Cr-1Mo-V is typically a martensitic structure at room temperature and requires great care in bending, welding, and postbending and welding heat treatment.

For hot bending, a temperature of 1740 to 1920°F (950 to 1050°C) is preferred. Bending in the temperature range of 1560 to 1740°F (850 to 950°C) should be avoided. After hot bending, a normalize at 1900 to 1990°F (1040 to 1090°C) is required to put carbides back into solution. The normalize is followed by a tempering heat treatment between 1350 and 1440°F (730 and 780°C). Both are followed by cooling in still air.

Welding is extremely critical. The latest ASME Section II Part C, lists 9Cr-1Mo-V filler materials. SFA 5.5 lists E9018-B9 for SMAW electrodes, and SFA 5.28 lists ER90S-B9 for rods and electrodes for gas-shielded welding. Storage and handling of electrodes is very critical (see Filler Metals). Preheat and interpass temperatures and postwelding cooling should be scrupulously observed (see Preheat and Interpass Temperature). Postwelding stress relief is a necessity. The current ASME B31.1 Code requires a range of 1300 to 1400°F (700 to 760°C), but some literature indicates that a range of 1360 to 1440°F (740 to 780°C) may be more desirable for reasonable hardness and good ductility. The time at temperature should be 1 h per in of thickness, and heating and cooling rates above 800°F (427°C) should be limited to 100°F (55°C) per h.

Martensitic and Ferritic Stainless Steels. The martensitic and ferritic grades of stainless steels are not often encountered in piping systems. They are a group of steels with chromium contents ranging from 11.5 to 30 percent. Martensitic stainless steels are those which are capable of transformation to martensite under most cooling conditions and therefore can be hardened. Ferritic stainless steels on the other hand contain sufficient chromium and other ferrite formers such as aluminium, niobium, molybdenum, and titanium so that they cannot be hardened by heat treatment. ASME Section IX classes martensitic stainless steels as P-No.6 and ferritic stainless steels as P-No.7. The user should consult the *Welding Handbook*[16] for suggested welding processes and the applicable code for specific preheating and postweld heat-treatment requirements.

Austenitic Stainless Steels. Austenitic stainless steels are classed as P No. 8. Piping systems of austenitic stainless steels represent a fairly significant proportion of a fabricator's and/or installer's work, since they appear in nuclear power plants, chemical plants, paper mills, food processing facilities, and other applications where cleanliness and corrosion resistance are mandatory and even in fossil power plants where their high-temperature properties are needed. Most root welding is done by the GTAW process, and the inside of the root is protected by purging with argon, helium, or nitrogen to prevent formation of hard chromic oxides. GTAW is used for weld-out in lighter walls, and combinations of GTAW, SMAW, and SAW are used for heavier sections. Filler metal must contain some ferrite to preclude microfissuring as described in the section ''Filler Metals.'' To minimize the precipitation of carbides (sensitization) during welding, interpass temperatures are usually limited to 300 to 350°F (150 to 175°C). Heat treatment after welding is not mandatory. For corrosion services, heating during fabrication could be detrimental since it would serve to enhance sensitization. The effects of sensitization can be mitigated by a carbide solution heat treatment as described in the section ''Heat Treatment.'' Low-carbon grades of stainless steels welded with L grade electrodes are also used in services where sensitization can be a problem.

Low-Temperature Steels. The term *low-temperature steel* is applied to a variety of steels which exhibit good notch toughness properties at temperatures down to cryogenic levels.

The B31.1 and B31.3 Codes permit the use of most steel down to −20°F (−29°C). Below this, certain grades of carbon and nickel steel with good toughness and austenitic stainless steels are needed. Welding procedures and welding filler metals must be tested to assure suitability for the intended service. B31.3 gives details of such requirements. Root pass welding using GTAW, with SMAW and SAW weld-out, is commonly used. Some FCAW is used in the carbon steels and low-nickel steels.

A preheat of 200°F (95°C) is suggested by B31.3 for low-nickel steels followed by a postweld heat treatment consisting of a stress relieve at 1100 to 1175°F (600 to 630°C) when the wall exceeds ¾ in (19 mm). For 9 percent nickel steel a preheat of 50°F (10°C) and a stress relieve at 1025 to 1085°F (552 to 585°C) followed by cooling at a rate greater than 300°F/h (167°C/h) down to 600°F (316°C) is required.

Certain nonferrous materials are also suitable for low-temperature service. See the following section.

Welding of Nonferrous Metals

Aluminum. Aluminum and aluminum alloys have high thermal conductivity, high coefficients of thermal expansion, and high fluidity in the molten state. The predominant welding methods used for joining them are GMAW and GTAW, both manually and in automatic modes. Joint designs are much like those used for ferritic metals, except that the included angles are usually 60 to 75°, increasing to 90 or 110° for welding overhead. The root pass may be welded against a permanent aluminum backing strip or removable stainless-steel backup or with an open butt or consumable insert. Joint cleanliness is very important, so oil, grease, and dirt must be removed. For heavy oxide, wire brushing or chemical cleaning may be required. Preheating is normally not needed but may be required when the mass of the parts is large enough to conduct the heat of welding away from the joint faster than it can be supplied by the arc. Depending on the welding process used, as the weld thickness increases from about ¼ to 1 in (19 to 25 mm), a preheat of 200 to 600°F (95 to 316°C) may be required. Since the properties and tempers of certain alloys may be affected, care should be exercised when preheat is applied. Shielding gases are usually helium or argon. For critical applications and heavier sections a mixture of 75 percent helium, 25 percent argon is recommended. Heat treatment after welding is not required.

It is important to remember that the annealing effect of the heat of welding can reduce the strength level of cold-worked and heat-treatable alloys. In this case the allowable stress value for the material in the annealed condition should be used for design. An exception to this can be made in the case of heat-treatable materials when the finished weldment is subjected to the same heat treatment which produced the original temper and both the base metal and weld joint are similarly affected.

Aluminum and aluminum alloys are suitable for service temperatures down to −452°F (−269°C). See B31.3 for information on this subject.

Copper and Copper Alloys. Although copper and copper alloys can be welded by other processes, GTAW welding is commonly applicable for all-position welding of most copper and copper alloys. GMAW with pulsed current can also be used for some alloys. Shielding gases may be argon, helium, or mixtures thereof. Argon is preferred for walls to ⅛ in (3 mm), but a 75 percent helium, 25 percent argon mixture is most often used for heavier walls and weld positions other than flat (1G).

Like aluminum, the coppers have high thermal conductivity and high coefficient of thermal expansion. Accordingly, preheating is recommended to compensate for heat loss at the joint due to the metal mass and to reduce distortion. Welding current should not be used to compensate for heat loss. The degree of preheat is a function of alloy, welding process, and metal mass. More heat input is needed for the pure coppers, with decreasing amounts needed as the alloy content increases. Preheat should increase with wall thickness, from about 200°F (95°C) for ¼-in (6 mm) wall increasing to 750°F (400°C) minimum for walls ⅝ in (16 mm) and over. Surface cleanliness is very important, and some alloys require a chemical cleaning to remove oxides. Copper-nickel alloys are susceptible to hot cracking if sulfur is present.

The heat of welding will soften the HAZ of cold-worked material, and it will be weaker than the base metal. When precipitation-hardenable alloys are used, it is recommended that welding be done on base metal in the annealed condition and the entire weldment be given the precipitation-hardening heat treatment. For detailed information refer to the *Welding Handbook*,[16] the *Metals Handbook*,[20] or contact the Copper Development Association.

Many coppers are suitable for services down to −325°F (−199°C), See ASME B31.3.

Nickel and Nickel Alloys. Nickel and its alloys can be welded by SMAW, GTAW, and GMAW. SAW is limited to certain compositions. Welding is similar to austenitic stainless steels except that the molten metal is more sluggish and does not wet as well. Larger groove angles may be required. Preheat is not required, but welding at temperatures below 60°F (16°C) in the presence of moisture is not recommended. A low interpass temperature is suggested. For GTAW welding shielding gas is normally argon, but helium or an argon-helium mix may be used. The inside surface of GTAW root welds should be shielded with an inert gas. GMAW in the spray, pulsed, globular, or short-circuiting modes may be used with argon or argon-helium mixtures as shielding. Postweld heat treatment is not usually required. Many nickel and nickel alloys may be used down to −325°F (−199°C). For more detailed information refer to the *Welding Handbook*,[16] the *Metals Handbook*,[20] and ASME B31.3.

Titanium. Titanium and its alloys are normally welded using the GTAW and GMAW processes. It is vital that the HAZ and molten metal be protected from the atmosphere by a blanket of inert gas during welding. Most welding is done in a protective chamber purged with an inert gas or by using trailing shields. Precleaning is extremely important. Use of degreasers, stainless steel wire brushes, or chemical solutions may be required. Preheating or postweld heat treatment are not normally required. See the *Welding Handbook*[16] and the *Metals Handbook*.[20]

Dissimilar Metals. Until now we have discussed welding where both items being joined are essentially the same material and are joined with a filler metal of similar chemistry and physical properties. Occasions arise where metals of different chemical composition and physical properties must be joined.

In joining dissimilar metals, normal welding techniques may be employed if the two base metals have melting temperatures within about 200°F (95°C) of each other. Otherwise different joining techniques are required.

In designing a welding procedure for dissimilar metals, a great many factors must be considered. Service conditions such as temperature, corrosion, and the degree of thermal cycling may apply. The effects of dilution of the two base metals by the filler and each other must be evaluated to assure a sound weld with suitable chemical, physical, metallurgical, and corrosion-resistant properties. Similarly, preheat and postweld heat treatment requirements for one base metal may not be suitable for the other.

It is usually necessary to qualify a separate welding procedure for the particular combination of base metals and filler material. ASME Section IX should be consulted for specifics.

As a general rule, when welding within a family such as ferritic to ferritic, austenitic to austenitic, or nickel alloy to nickel alloy, the filler metal may be of the same nominal composition as either of the base metals or of an intermediate composition. The filler metal normally used to weld the lower alloy is most often preferred.

The previous advice may not always hold true. It has been noted that when welding P 22 (2¼Cr-1Mo) to P 91 (9Cr-1Mo-V) using 2¼Cr filler metal at high temperatures, carbon migration from the 2¼Cr weld metal to the 9Cr base metal can produce a carbon-denuded zone at the interface, resulting in a weakened area. One recommendation is to "butter" the 9Cr side with a 5Cr filler metal, heat-treat the buttered segment, and complete the weld with 2¼Cr. Bear in mind that the 5Cr filler may not have high-temperature properties similar to the 2¼Cr, and design the weldment accordingly.

In welding dissimilar materials, selection of preheating and postweld heat treatment requires a great deal of care. What is desirable for one metal may be detrimental to another. Some compromise may be required.

Establishing a welding procedure for welding ferritic to austenitic steels requires careful consideration of the service conditions. For moderate service temperatures (below 800°F or 427°C), where the thickness of the ferritic side does not require postweld heat treatment, austenitic stainless steel electrodes are often the choice. Some prefer electrodes such as type 309 or 310 because of their higher chrome content. Because of the thickness involved, the ferritic member may require some type of postweld heat treatment. In this case the preferred method is to butter the ferritic weld surface with a nickel-chrome-iron (NiCrFe) filler metal such as ERNiCrMo-3 (see ASME Section II Part C SFA-5.14) and postweld heat-treat the buttered section as required for the ferritic composition. The buttered section is then prepared for welding, set up with the austenitic side, and the weld between the butter and austenitic base metal is completed with NiCrFe filler metal without subsequent postweld heat treatment. See Fig. A6.21.

For high-temperature service (above 800°F or 427°C) the buttering procedure just described is also recommended. There is a difference in coefficients of expansion between the ferritic and austenitic metals. This difference will result in expansion stresses above the yield point at the weld juncture while at operating temperature. At higher temperatures there is also greater probability of diffusion of carbon from the ferritic side to the austenitic side. The NiCrFe "butter" minimizes the carbon diffusion problem and has an expansion coefficient which is intermediate between the two base metals, thus reducing but not eliminating the thermal stress at the interface. Where a transition from ferritic to austenitic steels is required in high-

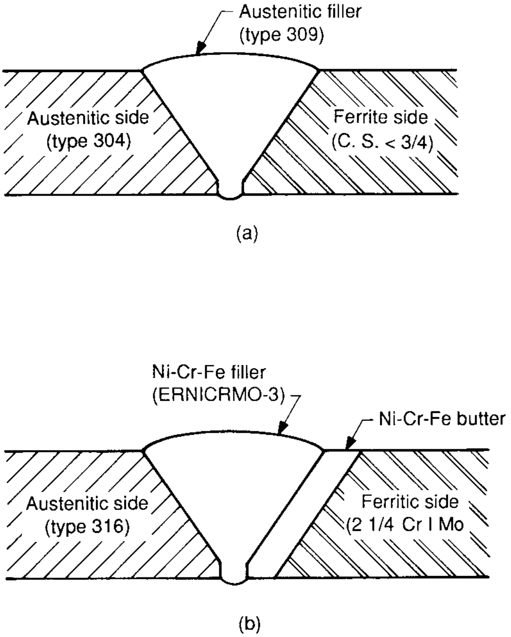

FIGURE A6.21 Dissimilar metal welds. (*a*) For moderate temperature service; (*b*) for high-temperature services or where stress relief on the ferritic side is required.

temperature applications involving cyclic services, a transition piece of a high-nickel alloy such as UNS N06600 with two welds is often used to reduce thermal fatigue damage.

In welding nonferrous metals to ferrous or other nonferrous metals, a filler metal with a melting point comparable to the lower melting point base metal is usually recommended.

Nickel and nickel alloys are invariably welded to ferrous metals with nickel-alloy filler metals. Sulfur embrittlement can be a problem with nickel to ferritic welds, just as it is in nickel-to-nickel welds. Copper-nickel and nickel-copper alloys should not be joined with filler materials containing iron or chromium since hot cracking may result.

Copper and copper alloys can be welded to carbon steel with silicon bronze or aluminum bronze electrodes, but the preferred method is to butter the carbon steel side with nickel and weld the copper to the nickel butter with nickel filler. This will preclude hot cracking of the copper because of iron dilution. The copper side may require preheat. Copper can easily be welded to nickel, copper-nickel, or nickel-copper filler metal. When welding nickel alloys which contain iron or chromium to copper, the nickel alloy should be buttered with nickel.

Aluminum and titanium generally cannot be welded to ferrous or other nonferrous metal using currently available welding procedures, and special joining procedures must be employed.

Clad, Metal-Coated, and Lined Pipe. There are instances when it is economically desirable to construct a piping system from relatively inexpensive material but with an interior surface having corrosion- or erosion-resistant properties. Clad pipe may be made by seam welding of clad plate, by weld metal overlay of the inside surface, or by centrifugal casting of a pipe with two metal layers. Lined pipe is made by welding a linear, sometimes as strips, to the inside surface of the pipe. Metal-coated pipe is made by dipping, metal spraying, or plating the entire pipe.

Before choosing construction which requires welding of clad, lined, or metal-coated pipe, such factors as filler metal compatibility, filler metal strength relative to the base metal strength, dilution of base metal into the finished weld, and need for postfabrication heat treatment must be considered. Because it is not possible to cover the great many combinations of base metals and cladding, lining, or metal coatings, some examples of the more common applications will be given.

For corrosion services, a carbon steel base material, clad or lined with austenitic stainless steel, is often used. The cladding is usually about 3⁄32 to 5⁄32 in thick. Where the inside of the weld is accessible, the preferred method is to weld the base metal from the outside with carbon steel filler metal, back-gouge the root from the inside, and weld the root from the inside with two or more passes of austenitic filler metal to minimize dilution from the base metal. See Fig. A6.22*a*.

Where the inside surface is not accessible, a backing strip of the same composition as the cladding, fillet welded to the cladding on the upstream side may be used. The root weld between the two clad surfaces and the austenitic backing strip is then made with austenitic filler metal. The root weld can also be made with the GTAW process using austenitic filler or preplaced inserts. The carbon steel should be removed for a sufficient distance back to preclude dilution into the root weld. In most instances, the balance of the weld is usually made with austenitic filler metal since it is not good practice to deposit carbon steel or low-alloy steel directly against the stainless steel deposit. See Fig. A6.22*b*. In some cases, nickel-base alloys are used for cladding where high-temperature corrosion is involved. The joints may be treated much like the austenitic cladding, except that appropriate nickel-base filler metals are used.

Some services require the use of carbon steel pipe nickel plated on the inside surface. Since the plating is relatively thin, different approaches are needed. First, as much fabrication as possible should be done prior to plating. For joints to be welded after plating, the ends to be prepared for welding should be buttered with nickel filler metal and machined to the required contour prior to plating. The root weld is made using the GTAW process with nickel filler metal. See Fig. A6.22*c*.

Some occasions require the use of aluminized pipe. Steel pipe is prefabricated and coated with aluminum by immersion in a bath of molten aluminum or by metal spray. Where the inside of the weld will not be accessible for metal spray, one method of joining is to counterbore the ends and use a solid machined backing ring which is fit and welded into one side of the joint prior to coating. After coating, the weld is made using an appropriate base metal process and filler, taking care not to blister the aluminum coating on the underside of the backing ring.

Galvanized steel pipe is often used for external corrosion applications. Since welding of galvanized pipe releases toxic vapors and since the welded area most often cannot be regalvanized, welding of galvanized pipe is not recommended. It is preferable that the assemblies be fabricated with provisions for mechanical joining in the field and then galvanized.

For services involving erosion, carbon steel pipe is often lined with cement or

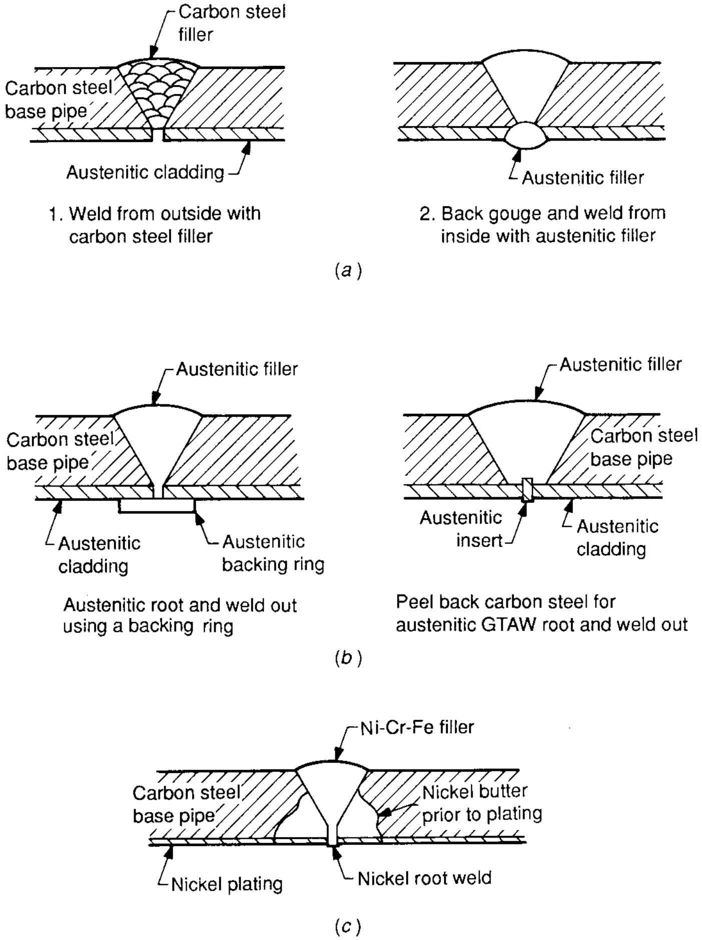
Carbon steel filler
Carbon steel base pipe
Austenitic cladding
1. Weld from outside with carbon steel filler
Austenitic filler
2. Back gouge and weld from inside with austenitic filler
(a)
Austenitic filler
Carbon steel base pipe
Austenitic cladding
Austenitic backing ring
Austenitic root and weld out using a backing ring
Austenitic filler
Carbon steel base pipe
Austenitic insert
Austenitic cladding
Peel back carbon steel for austenitic GTAW root and weld out
(b)
Ni-Cr-Fe filler
Carbon steel base pipe
Nickel butter prior to plating
Nickel plating
Nickel root weld
(c)

FIGURE A6.22 Examples of welding clad, lined, and plated pipe. (*a*) Clad pipe welded from both sides; (*b*) clad pipe welded from one side only; (*c*) nickel-plated pipe.

some type of abrasion-resistant material which cannot be welded. In this case the joints are butted together to minimize the gap between the adjacent linings. The weld is then made between the two carbon steel weld bevels, recognizing that full penetration through the carbon steel joint may not be achieved and that additional thickness may be necessary for strength. The gap between the adjacent linings is usually not a problem if only erosion is present.

Brazing and Soldering

Brazing. For services involving the ASME Boiler and Pressure Vessel Code or the B31 Code for Pressure Piping, brazing procedures and brazers must be qualified in accordance with ASME Section IX similar to welding procedures and welders. See the section ''Procedure and Personnel Qualification.''

There are a great many types of brazing processes. In establishing a brazing procedure, consideration must be given to the ability of the filler metal to produce suitable physical properties, its melting point and wettability, possible base metal and filler metal interactions, loss of base metal properties, increased sensitization to corrosion, increased hardness in the base metal due to brazing temperature, and the need for postbrazing heat treatments.

Since most piping materials can be welded, the use of brazing for joining is rather limited. It is most often used for joining coppers and for combinations of metals which cannot be welded.

Brazing is a process wherein the base metals do not melt, the filler metal has a liquidus above 840°F (450°C), and the filler metal wets the base metal and is drawn into the joint by capillary action.

Although butt or scarf joints can be used, a lapped joint with an overlap of 3 times the thickness of the thinner member gives the best joint efficiency and ease of fabrication. It should be noted that typical copper or brass fittings have a depth of socket based on the strength of tin-lead solders. When brazing is used, only a small percentage of that depth is needed. Required clearance between the faying surfaces usually vary from 0.001 to 0.010 in (0.025 to 0.25 mm) depending on the filler and flux combination used during the operation. The flux melts upon application of heat and is displaced by the molten filler metal. Flux residue should be removed after the operation is complete. Silver, copper-phosphorus, and copper-zinc filler metals are most often used for copper brazing.

Torch brazing is commonly used for fabrication and installation of copper piping systems. For torch brazing, the type of fuel gas selected is a function of the melting temperature required to melt the filler metal. For piping joints NPS 2 (DN 50) and larger, use of a second torch to preheat may be desirable.

In brazing metals with differing coefficients of expansion, it is preferable that the metal with the higher expansion coefficient form the socket and the metal of the lower expansion coefficient form the pipe or tube. Clearance between the parts at room temperature must be adjusted so there will be a suitable clearance at brazing temperature. On cooling, the greater contraction of the socket will put the joint in a compressive stress state.

Soldering. Unlike welding and brazing, ASME Section IX has no requirements for qualification of soldering procedures or personnel. Soldering is much like brazing in that the base metals are not melted, the faying surfaces are wetted by the filler, and the filler is drawn into the joint by capillary action. However, the melting point of the filler metal is lower than 840°F (450°C) usually between 450 and 500°F (230 and 260°C). Since the strength of soldering filler metals is considerably less than that of brazing fillers, a longer overlap is required to develop a joint equal to base metal strength. A clearance of about 0.003 in is preferred for optimum strength.

A good soldered joint depends again on the cleanliness of the faying surfaces. Fluxes are used to assist in the wetting action by removing tarnish films and to prevent oxidation. Rosin fluxes and organic fluxes are used for most materials. Inorganic fluxes may be required for certain other materials that can be soldered, while in some cases precoating of the material with a surface that can be soldered may be required. Most piping applications use tin-lead solders. These range in composition from 5 percent tin, 95 percent lead to 70 percent tin, 30 percent lead, with 50 percent tin, 50 percent lead the most common. Tin-antimony and tin-silver solders are also frequently used. For soldering aluminum, tin-zinc and zinc-aluminum are used.

For additional information refer to the *Welding Handbook*[16] and *The Theory and Technique of Soldering and Brazing of Piping Systems.*[33]

Heat Treatment

Purpose. Heat treatment during piping fabrication is performed for a variety of reasons (i.e., to soften material for working, to relieve fabrication stresses, to restore metallurgical and physical properties, etc.). During fabrication, ferritic steels undergo phase changes during heating and cooling, while the austenitic stainless steels and nonferrous piping materials do not; consequently differing criteria must be applied.

Ferritic Steels. Ferritic steels undergo a phase change on heating and cooling during fabrication operations because their principal component (iron) is allotropic; that is, it undergoes a change in crystalline structure with temperature. At room temperature iron favors a body-centered cubic (BCC) structure called *alpha iron*, but on heating to 1670°F (910°C) it changes to a face-centered cubic (FCC) structure called *gamma iron* and subsequently at 2534°F (1390°C) it reverts to a BCC called *delta iron*. The addition of carbon to the iron to form steel and additions of other elements such as chromium, manganese, molybdenum, and nickel to form alloys modify the temperatures at which transformation occurs and the manner in which the crystalline structure forms into grains.

As an example, a melt of 0.30 percent carbon steel will first begin to solidify as delta iron and a liquid, then at about 2680°F (1479°C) to an interstitial solid solution of carbon in gamma iron called *austenite*. At about 1500°F (815°C) this will transform into a mixture of austenite and ferrite, which at 1333°F (721°C) becomes ferrite and pearlite. Ferrite is alpha iron which contains small amounts of carbon (up to a maximum of about 0.02 percent) in solid solution. The excess carbon not in solid solution with the ferrite forms as iron carbide (Fe_3C) or cementite. The cementite forms as thin plates alternating with ferrite. This structure is known as *pearlite*.

The temperatures at which the transformations occur are called critical temperatures or transformation temperatures. The lower critical temperature, usually designated A_1, is that point on heating where the BCC ferrite and pearlite phase begins to transform to FCC austenitic structure, and the upper critical temperature, A_3, is the temperature at which the transformation is complete. Between these two points the structure is a mix of ferrite-pearlite and austenite. These temperatures are of importance in postbending and postwelding heat treatments as well as qualification of welding procedures.

The critical temperatures are a function of chemical composition and as such will vary with alloy. As an example, for 9Cr-1Mo-V, the lower critical is located between 1525 and 1560°F (830 and 850°C), and the upper critical is between 1650 and 1725°F (900 and 940°C). Some approximate methods of calculating critical temperature are found in *Welding Metallurgy*[34] and *The Making, Shaping and Treating of Steel.*[35] Some approximate lower critical temperatures are given in Table A6.8.

Critical temperatures are affected by heating and cooling rates. An increase in heating rate will serve to increase the transformation temperatures, while an increase in cooling rate will tend to depress them. The more rapid the rate of heating or cooling, the greater the variation from the critical temperature at equilibrium conditions. Most sources will indicate the lower and upper critical temperatures on heating as A_{c1} and A_{c3}, respectively, and the upper and lower on cooling as the A_{r3} and A_{r1}, respectively. In the case of our 0.30 percent carbon steel, cooling from the austenite phase through the critical range at a rate of 50°F/h (28°C/h) or less will result in the soft, ductile ferrite-pearlite structure. On the other hand, extremely

TABLE A6.8 Approximate Lower Critical Temperatures

Material	Approximate lower critical temperature [°F (°C)]
Carbon steel	1340 (725)
Carbon molybdenum steel	1350 (730)
1¼ Cr–½ Mo	1430 (775)
2¼ Cr–1 Mo, 3 Cr–1 Mo	1480 (805)
5 Cr–½ Mo	1505 (820)
9 Cr–1 Mo	1490 (810)

Source: From ASME B31.1 1995 ed.

rapid cooling from the austenite phase down to temperatures 600°F (316°C) or lower can result in an extremely hard structure called *martensite*. This is because the austenite FCC crystals did not have time to transform to BCC ferrite and cementite.

Heat treatments which are applied to ferritic steels are related to the critical temperatures and depending on which is applied will have differing results. These are annealing, normalizing, normalizing and tempering, and stress relieving. See Fig. A6.23.

Annealing is used to reduce hardness, improve machinability, or produce a more uniform microstructure. It involves heating to a temperature above the upper critical or to a point within the critical range, holding for a period of time to assure temperature uniformity, then following with a slow furnace-controlled cooling through the critical range.

Normalizing is used to refine and homogenize the grain structure and to provide more uniform mechanical properties and higher resistance to impact loadings. It involves heating to a temperature above the upper critical temperature, holding for a time to permit complete transformation to austenite, and cooling in still air from the austenitizing temperature.

A normalized structure may be pearlitic, bainitic, or even martensitic depending on the cooling rate. If there is a concern for excessive hardness and attendant low ductility, a tempering treatment may follow the normalizing treatment. Tempering involves heating to a temperature below the lower critical and slowly cooling to room temperature, much like a stress relief. The degree of tempering depends on the tempering temperature selected. The higher the tempering temperature, the greater the degree of softening.

A stress-relieving heat treatment is primarily intended to reduce residual stresses resulting from bending and welding. It involves heating to a temperature below the lower critical; holding for a predetermined time, depending on thickness and material, to permit the residual stresses to creep out; and then slowly cooling to room temperature.

Some typical time-temperature cycles are shown in Table A6.7.

Austenitic Stainless Steels. Austenitic stainless steels do not undergo phase changes like the ferritic steels. They remain austenitic at all temperatures and so heat treatments usually do not apply. When austenitic stainless steels are to be used in corrosive services, cold working and heating for bending may significantly lower their corrosion resistance. Cold working may result in residual stresses, and heating operations can result in sensitization. Both factors contribute to intergranular stress corrosion cracking (IGSCC). When austenitic stainless steels are heated

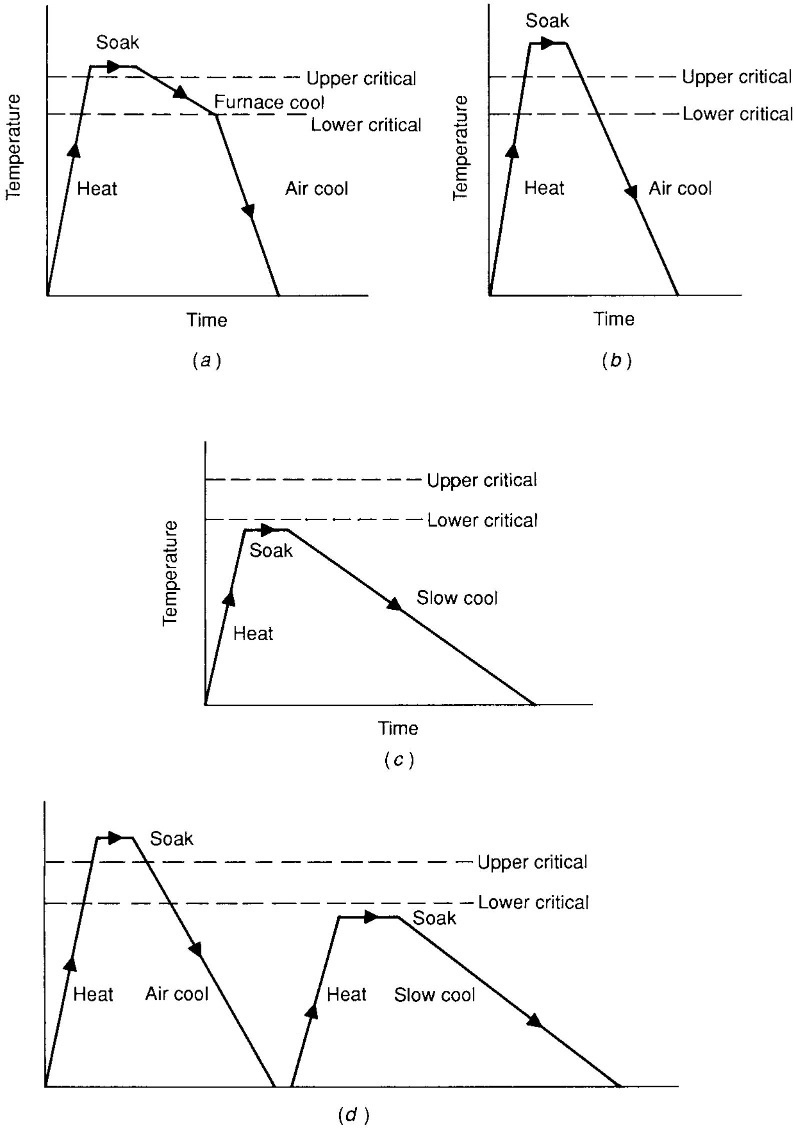
Soak
Upper critical
Furnace cool
Lower critical
Temperature
Heat
Air cool
Time
(a)
Soak
Upper critical
Lower critical
Temperature
Heat
Air cool
Time
(b)
Upper critical
Lower critical
Soak
Temperature
Slow cool
Heat
Time
(c)
Soak
Upper critical
Lower critical
Soak
Heat
Air cool
Heat
Slow cool
(d)

FIGURE A6.23 Heat treatment cycles. (*a*) Anneal; (*b*) normalize; (*c*) stress relief; (*d*) normalize and temper.

in the range of about 800 to 1600°F (430 to 870°C), carbon in excess of about 0.02 percent will come out of solution and diffuse to the grain boundaries where it will combine with adjacent chromium to form chromium carbide ($Cr_{23}C_6$). This phenomenon is called *sensitization*. These grain boundaries are then preferentially attacked by corrosive media. The heat treatment often applied to cold-worked and sensitized stainless steels to restore corrosion resistance is a carbide solution heat treatment. In this procedure, the material is heated to a temperature above the sensitization range, usually about (1950 to 2100°F (1065 to 1150°C), and held there sufficiently long to permit the carbides to dissolve and the carbon to go back into solid solution. The material is then removed from the furnace and rapidly cooled through the sensitization range, preferably by quenching in water. The rapid cooling does not give the carbon sufficient time to come out of solution, and corrosion resistance is restored to the sensitized area.

Obviously carbide solution heat treatment is limited by the furnace size and quenching facilities. It is most freqently applied to bends but is also useful in reducing sensitization and residual stresses in welds.

Nonferrous Materials. Bending and forming of nonferrous materials may result in undesirable work-hardening. Some nickel alloys may be subject to carbide precipitation when hot bent or formed. Materials that can be hardened by precipitation require other considerations. Depending on the final use, it may be desirable to perform some type of postbending or forming heat treatment. Because of the great many new materials being developed and used, it is suggested that the user contact the material manufacturers or material associations for their recommendations on the specific material and service.

Heat Treatment Methods. Shop heat treatments are most often carried out in specifically designed heat treatment furnaces, but local stress relieving of welds may also involve induction, resistance, or torch heating.

Above critical heat treatments, such as annealing, normalizing, and normalizing and tempering for ferritic steel and carbide solution heat treatment for austenitic stainless steels, are performed in large heat-treatment furnaces. These same furnaces are also used for stress-relieving heat treatments of ferritic steels. Such furnaces are generally fired with natural gas, propane, or low-sulfur oil. Depending on their design, they may attain temperatures up to 2300°F (1260°C) which covers the entire spectrum of temperatures commonly encountered in piping applications. Heating and cooling rates and holding temperatures are automatically controlled. Larger furnaces may have two or more zones, each independently controlled. Records of furnace zone temperatures and material temperatures are obtained using recording potentiometers.

When assemblies are too large or furnaces are not available, local stress relieving of individual welds may be accomplished in the shop using electrical induction, electrical resistance, or gas torch heating.

Induction equipment involves alternating current frequencies of the order of 60 to 400 Hz. Induction generates heat within the wall of the pipe. This has the advantage of a more uniform temperature through the thickness with greater uniformity at the lower frequencies. The heat treatment cycle is controlled automatically with thermocouples attached directly on or adjacent to the weld. The weld and thermocouple are covered with insulating material. The induction field is generated in copper cables or solid or water-cooled copper coils external to the insulation. See Fig. A6.24.

Resistance heating involves the use of direct current in suitable lengths of nichrome heating wire. Various configurations and sizes of prefabricated heating elements consisting of heating wires separated by ceramic beads are available

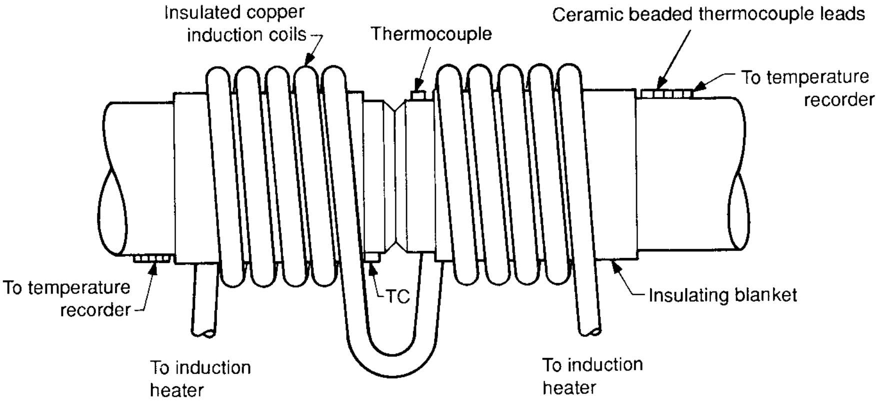

FIGURE A6.24 Setup for preheat, maintenance of preheat during welding, and stress relief using induction heating.

commercially. Depending on the size, wall thickness, and desired heating temperature, multiple heating units and combinations of elements may be needed. The weld and heating elements are covered with insulating blankets to retain the heat. Since heating is from one side, a somewhat wider heating band on the outside may be needed to assure that the inside of the pipe attains the required temperature. Thermocouples attached directly to the weld or adjacent to it are used to control heating, holding, and cooling temperatures.

Torch heating can often be used for stress relieving, but where controlled heating and cooling rates are mandated, it may be less than satisfactory. Single torches may be used for pipe up to about NPS 3 (DN 80), but ring burners are needed for larger sizes.

Exothermic heating has been used in the field and is discussed in the section ''Installation.''

Heat Treatment Considerations

Furnace Heat Treatment. To assure that heat treatments attain the results intended (i.e., correct heating and cooling rates, desired holding temperature in all parts, etc.), it is very important that all controlling and recording instruments be calibrated on a regular basis. The furnace should be inspected and a temperature survey made to assure that all locations within it are capable of attaining and maintaining specific temperatures within some reasonable tolerance. This is particularly important if the zone temperatures are used as the basis for acceptance of the heat treatment. If there is any concern, it might be advisable to attach thermocouples directly to the parts being heat-treated.

When piping subassemblies are placed in the furnace, they should be supported to permit exposure of the underside to the radiant and convection heating surface. Supports should be located so as to avoid sagging. Care should be taken to avoid any flame impingement directly on surfaces being heat-treated.

The ends of assemblies being heat-treated should be closed but not sealed to minimize oxidation of the inside surfaces. Occasions may arise where special surface finishes on the pipe inside surface or on flow meter sections could be adversely affected by oxidation caused by heat treatment. In such cases the inside of the assembly can be purged with an inert gas to minimize oxidation.

Assemblies should be so placed as to assure the uniform application of heat. Heating and cooling rates must be selected to assure heating through the full thickness and to minimize distortion caused by uneven heating. The faster the rate of heating or cooling, the more probability of distortion. Assemblies with massive flanges, fittings, or other unusual configurations should be treated more carefully than those with butt welds only. Many of the codes have specified heating and cooling rates which are considered reasonable.

Local Heat Treatment. When an assembly is too large for a furnace to accommodate, it may be fabricated in sections which are individually furnace heat-treated and later joined by welding. The final butt welds may then be locally heat-treated in the same fashion as field welds. The most common practice is the use of induction or resistance heating. When preheating is an essential part of the welding operation, the induction or resistance equipment can be used for preheating, maintaining preheat during welding, and, finally, stress relieving.

A proper stress-relieving operation will assure that the weld and HAZ through the full thickness will attain the required temperature for the required time. The B31.1 Code requires that the heated band be at least 3 times the thickness of the thickest part being joined. With induction or resistance heating the heating elements themselves often have greater coverage. Depending on the massiveness of the joint being heated, one or more pieces of heating equipment may be needed. Controlling and recording thermocouples are located on or adjacent to the weld. Usually locally heat-treated shop welds are in the 5G position (pipe horizontal, weld vertical). For small pipe sizes, a single thermocouple located at the 12 o'clock position may suffice, but for larger diameters and heavier walls at least two and preferably four, located at 90° intervals, should be employed to assure uniformity of heating.

Judicious use of insulating material should be employed to minimize heat loss. When joining parts of differing masses, concentrate more heating effort on the more massive part.

If it is necessary to locally stress-relieve a branch connection, not only the branch weld itself but the entire circumference of the header for a distance of at least 2 times the header thickness on either side of the branch should be heated. Heating of the weld alone, while resulting in a satisfactory stress relief, could distort the header significantly.

Heating and cooling during local stress relief of pipe to pipe joints can be more rapid than for furnace applications since there is less chance of distortion unless, of course, the heating is not applied uniformly. Ends of the assembly should be closed but not sealed to reduce heat loss on the inside surface due to air flow. The main concern is assurance that the inside surface of the weld attains the required temperature for the required time.

Local stress relieving with torches or gas ring burners can be effectively employed but must be limited to situations where controlled heating and cooling rates are not a factor.

Code Requirements

Postbending and Postforming Requirements. The designer of the piping system should specify the type of heat treatment required to assure appropriate physical, metallurgical, or corrosion-resistant properties. As an example, a normalize or normalize and temper may be required to assure certain notch toughness properties for nuclear or low-temperature applications, or a carbide solution heat treatment for cold-worked austenitic stainless steel may be required to preclude IGSCC. This should be agreed upon well before any fabrication starts.

The codes have certain mandatory heat treatment requirements which must be observed as a minimum, normally a stress-relieving treatment. Such heat treatment is usually in accordance with the postweld heat treatment tables given in the applicable code. Differing requirements apply depending on whether the bending or forming was performed hot or cold. According to B31.3, cold bending is performed at a temperature below the transformation range (below the lower critical), and hot bending is performed at a temperature above the transformation range (above the upper critical). B31.1 and ASME Section III make the break between hot and cold bending at a temperature 100°F (38°C) below the lower critical.

B31.3 requires heat treatment after cold bending when (1) specified in the engineering design, (2) the calculated elongation will exceed 5 percent for materials requiring notch toughness properties, and (3) the calculated elongation will exceed 50 percent of the specified minimum elongation indicated in the material specification for P-No.1 through P-No.6 materials. For hot bending and forming, heat treatment is required for all thicknesses of P-Nos.3, 4, 5, 6, and 10A materials.

B31.1 and ASME Section III on the other hand require heat treatment after bending or forming in accordance with the postweld heat treatment table of the applicable code for P-No.1 materials with a nominal wall thickness exceeding ¾ in unless the bending or forming was completed above 1650°F (900°C). All ferritic alloy materials of NPS 4 (DN 100) or larger or with a nominal wall thickness of ½ in or greater which are hot bent or formed must receive an annealing, normalizing and tempering, or a tempering heat treatment to be specified by the designer, or if cold bent or formed, the heat treatment at the required time and temperature cycle specified in the postweld heat treatment table for the material involved.

The codes have no requirements for postbending or forming heat treatments of austenitic stainless steels or nonferrous materials.

Postwelding Heat Treatment Requirements. Before applying any post-welding heat treatment (PWHT), it should be noted that for work under ASME Section IX, postwelding heat treatment is an essential variable for welding procedure qualification. For ferritic materials there are five possible conditions of heat treatment, each requiring separate qualifications. These are:

1. No PWHT
2. PWHT below the lower critical temperature (stress relief)
3. PWHT above the upper critical temperature (normalize or anneal)
4. PWHT above the upper critical temperature, followed by heat treatment below the lower critical temperature (normalize and temper)
5. PWHT between the upper and lower critical temperatures.

For other materials, two conditions apply: no PWHT or PWHT within a specified temperature range.

Accordingly, for shop work, it may be necessary to qualify welding procedures for several possible heat-treatment situations. For field work only the no heat treatment or stress-relieving situations will normally apply.

When required by the codes, heat treatment consists of a stress-relieving operation. Other heat treatments such as annealing, normalizing, or solution heat treatment may be applied but are not mandatory. However, the welding procedure must have been qualified for the heat treatment applied.

Each code has its own definition regarding governing thicknesses, its own exemptions, differing temperature and holding requirements, heating and cooling rates, etc., reflecting the differing concerns and needs of individual industries. The codes are also constantly evolving as the committees obtain and review new data. Accordingly, the reader should refer to the applicable edition of the code of interest for requirements.

At the time of this writing, the following is a comparison of the heat treatment requirements for carbon steel materials.

B31.1 requires heat treatment of P-No. 1 Gr.Nos. 1, 2, and 3 in the temperature range of 1100 to 1200°F (600 to 650°C) for 1 h/in (1 h/25 mm) of thickness for the first 2 in (50 mm) plus 15 min for each additional inch over 2 in (50 mm), with a 15-min minimum. Exempted are welds with a nominal thickness of ¾ in (19 mm) or less, and a 200°F (95°C) preheat must be applied when either of the base metals exceed 1 in (25 mm). The nominal thickness is defined as the lesser of the thickness of the weld or the thicker of the base metals being joined at the weld. The thickness of the weld is further defined as the thicker of the abutting edges in a groove weld, the throat of a fillet weld, the depth of a partial penetration weld, and the depth of the cavity for repair welds. Thickness as it relates to branch welds is a function of the header thickness, the branch thickness, and reinforcing pad thickness.

B31.1 also requires controlled heating and cooling at temperatures above 600°F (316°C). The rate shall not exceed 600°F/h (335°C/h) or 600°F/h (335°C/h) divided by one-half the maximum thickness at the weld in inches, whichever is less.

Section III requires heat treatment of P-No. 1 materials in the temperature range of 1100 to 1250°F (600 to 675°C) for 30 min when the thickness is ½ in (12.7 mm) or less, for 1 h/in (1 h/25 mm) of thickness for thickness over ½ to 2 in (12.7 mm to 50 mm), and 2 h plus 15 min for each additional inch of thickness over 2 in (50 mm). In this case the thickness is defined as the lesser of (1) the thickness of the weld, (2) the thinner of the pressure retaining parts being joined, or (3) for structural attachment welds, the thickness of the pressure retaining material.

ASME Section III exempts P-No. 1 materials in piping systems from mandatory heat treatment based on thickness and carbon content. When the materials being joined are 1½ in (38 mm) or less, the following exemptions apply: (1) a carbon content of 0.30 percent or less with a nominal thickness of 1¼ in (32 mm) or less, (2) a carbon content of 0.30 percent or less with a nominal wall thickness of 1½ in (38 mm) when a preheat of 200°F (95°C) is applied, (3) a carbon content over 0.30 percent with a nominal wall thickness of ¾ in (19 mm) or less, and (4) a carbon content over 0.30 percent and a nominal wall of 1½ in (38 mm) or less when a preheat of 200°F (95°C) is applied.

ASME Section III also requires controlled heating and cooling. Above 800°F (430°C) the rate shall not exceed 400°F/h (225°C/h) divided by the maximum thickness in inches but not to exceed 400°F/h (205°C/h). The rate need not be less than 100°F/h (55°C/h). Time and temperature recordings must be made available to the Authorized Nuclear Inspector.

B31.5 requires heat treatment of P-No. 1 material greater than ¾ in (19 mm) in the temperature range of 1100 to 1200°F (600 to 650°C) for 1 h/in (1 h/25 mm) of wall thickness with a 1 h minimum. The governing thickness is the thicker of the abutting edges for butt welds and the throat thickness for fillet socket and seal welds. Controlled heating and cooling rates are specified.

B31.3 has similar requirements except that differing thickness definitions are applied to branch, fillet, and socket welds, and there are no specified heating or cooling rates.

B31.4 and B31.11 both require stress relieving when the wall thickness exceeds 1¼ in (32 mm), or 1½ in (38 mm) if a 200°F (95°C) preheat is applied. No specific temperature is specified. B31.8 on the other hand requires stress relief if the carbon content exceeds 0.32 percent, the carbon equivalent (C + ¼ Mn) exceeds 0.65 percent, or the wall thickness exceeds 1¼ in (32 mm). Carbon steels are to be heat treated at 1100°F (600°C) or higher as stated in the qualified welding procedure.

Requirements for postweld heat treatment of many different ferrous alloy steels are given in the various codes. As in the case of the carbon steels, there are variations in requirements from code to code.

In the case of welding dissimilar metals, the codes most often specify that the heat treatment which invokes the higher temperature requirement be applied to the weld joint. In applying this criteria many factors should be considered. See the section ''Dissimilar Metals'' for some options. Another possibility is to take advantage of longer-time and lower-temperature heat treatments permitted by some codes.

In the end, the best source of information for specific requirements regarding heat treatment is the particular code mandated by law or contract. Where none is invoked, the various codes can be used as guides.

Verification Activities—Inspection, Nondestructive Examination, Testing, and Quality Assurance and Quality Control

Introduction. Activities involved in verifying that fabrication meets the specified quality level may be broadly categorized as inspection, NDE, testing and QA and QC.

The terms *inspection, examination*, and *testing* are still often used interchangeably. The ASME Boiler and Pressure Vessel Codes have begun to establish specific definitions for these terms. The B31 Codes present a mixture of usages, some following the ASME Boiler and Pressure Vessel Code lead, while others are less definitive. The reader is directed to the individual codes to see how these terms are used. In general, the ASME Boiler and Pressure Vessel Code practice will be followed in this section.

Inspection relates to those activities performed by the owner, the owner's agent, or a third party. All other activities are usually performed by fabricator personnel.

The term *examination* is applied to nondestructive methods of examination, while *testing* refers to traditional hydrostatic and pneumatic tests for leakage. QA and QC relate to in-plant or on-site programs, whose function is to control the various activities which affect quality.

Inspection. Inspection, as used in ASME Section I, III and B31.1 for Boiler External Piping, covers those activities which the authorized inspector (AI) or authorized nuclear inspector (ANI) performs in verifying compliance with the applicable code. The AI or ANI is employed by a third party; is independent of the owner, fabricator, or installer; is an employee of a state or municipality in the United States, a Canadian province, or an insurance company authorized to write boiler insurance; and is qualified by written examination as required by state or provincial rules.

In the B31 Piping Codes, inspection is the verification activity performed by the owner or the owner's agent. Specific requirements for qualification of inspectors are outlined in the individual code sections.

The manner in which an inspector verifies compliance is generally left to the discretion of the individual. It may take the form of detailed visual examinations; witnessing of actual operations such as bending, welding, heat treatment, or NDEs; review of records; or combinations thereof. Much relies on the degree of confidence the inspector has in the fabricator's programs and personnel. B31.3 has mandatory sampling requirements for this activity.

Examination

Types of Examinations. When used in the various codes, examination refers to the verification work performed by employees of the fabricator, much of which falls into the category of NDE. NDEs most often referenced by code and applied to the fabrication and installation of piping components and systems are:

Visual
Radiographic
Ultrasonic
Liquid penetrant
Magnetic particle

Eddy current examination is often used to evaluate the quality of straight lengths of pipe as they are manufactured but is not often used in fabrication activities. Although not referenced by most codes, bubble testing, halogen diode probe testing, or helium pass spectrometer leak testing may be invoked by contract when, in the opinion of the designer, they will contribute to the integrity of the system. While these methods are referred to as leak tests, their methodology is outlined in Article 10 of ASME Section V Nondestructive Examination.

Accept-reject criteria and the extent to which the various NDEs are to be applied are in the applicable code.

The following are brief descriptions of NDEs as they apply to piping. For much more detailed information the reader is referred to various publications of the American Society for Nondestructive Testing (ASNT),[36] particularly the Nondestructive Testing Handbooks.

1. *Visual examination:* Visual examination is probably the oldest and most widely used of all examinations. It is used to ascertain alignment of surfaces, dimensions, surface condition, weld profiles, markings, and evidence of leaks, to name a few. In most instances the manner of conducting a visual examination is left to the discretion of the examiner or inspector, but more recently, written procedures outlining such things as access, lighting, angle of vision, use of direct or remote equipment, and checklists defining the observations required are being used. Visual examination takes place throughout the fabrication cycle along with QA and QC checks. At setup, this would consist of verifying materials, weld procedures, welder qualifications, filler metal, and weld alignment, and on completion of fabrication, such things as terminal dimensions, weld profile, surface condition, and cleanliness.

2. *Radiographic examination:* When the need for greater integrity in welding must be demonstrated, the most frequently specified examination is radiography. Since the internal condition of the weld can be evaluated, it is referred to as a *volumetric* examination.

Radiographic sources used for examination of piping are usually X-rays or gamma rays from radioactive isotopes. While X-ray equipment is often used, it has limitations in that it often requires multiple exposures for a single joint, and special equipment, such as linear accelerators, are needed for heavier thicknesses. Although X-ray machines produce films with better clarity, they are not as practical in the field because of space limitations and portability. In the field, radioactive isotopes are used almost exclusively because of their portability and case of access. For wall thicknesses up to about 2½ in (63.5 mm) of steel, the most commonly used isotope is iridium 192. Beyond this cobalt 60 is used for wall thickness up to about 7 in (179 mm).

Radioactive sources normally used in piping work range in intensity from a few curies up to about 100 curies. Each source decays in intensity in accordance with its particular half-life. As the intensity decays, longer exposure times are required. Iridium 192 has a half-life of 75 days, while cobalt 60 has a 5.3-year half-life.

Radioactive sources have finite dimensions and as a result produce a shadow effect on the film. This is referred to as geometric unsharpness, and it is directly proportional to the source size and inversely proportional to the distance between the source and the film. ASME Section V has established limits for geometric unsharpness.

Ideally for pipe, the source is placed inside the pipe and at the center of the weld being examined, with film on the outside surface of the weld, thus permitting one panoramic exposure. Where geometric unsharpness precludes this practice, the source may be placed on the inside on the opposite wall and a portion of the weld is shot. Several exposures will be needed. The source may also be placed outside the pipe and the exposure made through two walls. Again this requires multiple exposures and longer exposure times. See Fig. A6.25.

A radiograph is considered acceptable if the required essential hole or wire size

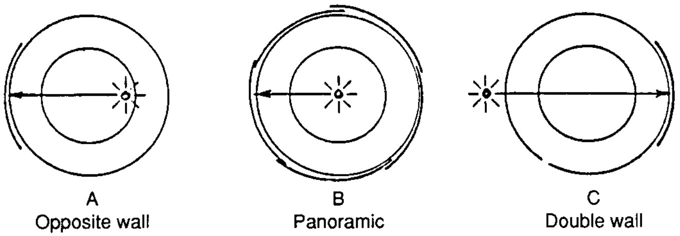

Given: 1. 30-in dia. X 7-in wall C/S pipe

2. 10 cu CO_{60} X 0.051 dia. source

3. 50 cu CO_{60} X 0.125 dia. source

4. 100 cu CO_{60} X 0.181 dia. source

5. Max. allowable geometric unsharpness $Ug = \frac{Fd}{D} = 0.07$ in (ASME Sect. V Art. 2 para. T-274)

6. Use Kodak "AA" Film with a 2.5 film density

Min. SFD = 5.1 in for 10 cu AX 0.051 in dia.
12.5 in for 50 cu X 0.125 in dia.
18.1 for 100 cu X 0.181 in dia.

Using the parameter established in 1 above as well as 5 and 6, it would be possible to:

(*a*) Use a 10-cu source as established in 2 above and shoot the pipe using the panoramic technique, sketch B above, with an exposure time of 3 hrs or

(*b*) Use a 50-cu source as established in 3 above and shoot the pipe using the panoramic technique, sketch B above, with an exposure time of 1 hour 15 min or

(*c*) Use a 100-cu source as established in 4 above and shoot the pipe using the opposite wall technique, sketch A above, with an exposure time of 50 min. As many as six exposures might be required—total 5 hrs.

FIGURE A6.25 Effect of source size on radiographic technique.

from the image quality indicator is visible on the film. See ASME Section V for information on this subject.

3. *Ultrasonic examination:* Ultrasonic examination is used in piping for the detection of defects in welds and materials as well as for determining material thickness. A short burst of acoustic energy is transmitted into the piece being examined and echoes reflect from the various boundaries. An analysis of the time and amplitude of the echo provides the examination results.

A clock in the equipment acts to initiate and synchronize the other elements. It actuates a pulsar to send a short-duration electrical signal to a transducer, usually at a frequency of 2.5 MHz. The transducer converts the electrical signal to mechanical vibration. The vibration as ultrasound passes through a couplant (such as glycerine) and through the part at a velocity which is a function of the material. As the sound reflects from various boundaries, it returns to the initiating transducer or sometimes to a second one where it is converted back to an electrical signal which is passed to a receiver amplifier for display on a cathode-ray tube. The horizontal axis of the display relates to time and the vertical axis relates to amplitude. The indication on the extreme left will show the time and amplitude of the signal transmitted from the transducer. Indications to the right will show the time and degree of reflection from various boundaries or internal discontinuities.

The ability of an ultrasonic examination to detect discontinuities depends a great deal on the part geometry and defect orientation. If the plane of the defect is normal to the sound beam, it will act as a reflecting surface. If it is parallel to the sound beam, it may not present a reflecting surface and accordingly may not show on the oscilloscope. Therefore, the search technique must be carefully chosen to assure that it will cover all possible defect orientations.

The most serious defect in a pipe butt weld is that which is oriented in the radial direction. The most commonly used technique for detecting such defects is the shear wave search. In this procedure, the transducer is located to one side of the weld at an angle to the pipe surface. The angle is maintained by a lucite block which transmits the sound from the transducer into the pipe. The sound will travel at an angle through the pipe and weld. Being at an angle, it will reflect from the pipe surfaces until it is attenuated. Any surface which is normal to the beam, however, will reflect a portion of the sound back to the transducer and show as an indication on the oscilloscope. See Fig. A6.26. If the beam angle and the material thickness are known, the reflecting surface can be located and evaluated.

Prior to and periodically during each search, the equipment is calibrated against artificial defects of known size and orientation in a calibration block. The block must be representative of the material being searched (i.e., an acoustically similar material, with appropriate thickness, outside contour, surface finish, and heat-treated condition).

A variation of ultrasonic examination can be used to measure material thickness. If the speed of sound within the material is known, the time it takes for the signal to traverse the thickness and return can be converted to a thickness measurement.

4. *Liquid penetrant examination:* Penetrant-type examinations are suitable for surface examinations only but are very sensitive. They require a fairly smooth surface, since surface irregularities such as grinding mark indications can be confused with defect indications. The surface to be examined is thoroughly cleaned with a solvent and then coated with a penetrating-type fluid. Sufficient time is allowed to permit the fluid to penetrate into surface discontinuities. The excess penetrant is removed by wiping with cloths until all evidence of the penetrant is removed. A developer which acts somewhat like a blotter is then applied to the surface. This

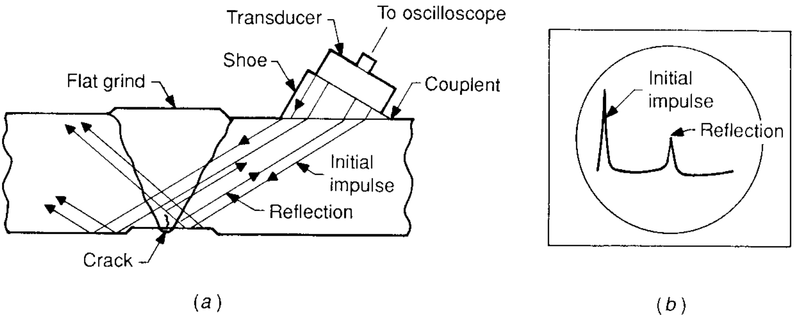

FIGURE A6.26 Ultrasonic shear wave search. (*a*) Search arrangement; (*b*) oscilloscope.

draws the penetrant out of the discontinuity, and it will appear on the surface as an indication. Obviously, the success of the examination depends on the visibility of the indication. To enhance this, the penetrant contains colored dyes which can be seen under normal light, or fluorescent dyes which are viewed under ultraviolet light. The most common case is a red dye penetrant with a white developer.

5. *Magnetic particle examination:* Magnetic particle examination is essentially a surface-type examination, although some imperfections just below the surface are detectable. This type of examination is limited to materials which can be magnetized (paramagnetic materials), since it relies on the lines of force within a magnetic field.

The item to be examined is subjected to a current which will produce magnetic lines of force within the item. The surface is then sprayed with a fine iron powder. The powder will align itself with the lines of force. Any discontinuity normal to the lines of force will produce a leakage field around it and a consequent buildup of powder which will pinpoint the defect. The examination must be repeated at 90° to detect discontinuities which were parallel to the original field.

There are a great many variations of magnetic particle examination depending on the manner in which the field is applied and whether the particles are wet or dry and fluorescent or colored.

Methodology. The ASME Boiler and Pressure Vessel, B31.1 and B31.3, require certain NDEs to be performed in accordance with the methods described in ASME Section V Nondestructive Examination. The pipeline codes, B31.4, B31.8, and B31.11, refer to API-1104 for Radiographic Procedures. In some cases, particularly in visual examination, requirements are given but no specific methodology is stated. In others, alternative parameters or qualification requirements are given. The specific requirements of the individual codes should be consulted.

Qualification Requirements. Qualification of procedures and personnel used in NDEs are required by most codes. When ASME Section V or API-1104 are invoked by the referencing code, a written procedure is required and it must be demonstrated to the satisfaction of the AI, ANI, owner, or owner's agent, whichever is applicable. Similarly personnel who perform NDEs must be trained, qualified, and certified. The most frequently invoked qualification document is SNT-TC-1A[37]; it is also accepted by B31.1 for qualification of personnel performing visual examinations. Some codes permit alternatives, such as AWS-QC-1.[38]

TABLE A6.9 Acceptance Standards for Visual Examination

The following indications are unacceptable:

1. Crack(s) on external surfaces
2. Undercut on surface greater than 1⁄32 in (1.0 mm) deep
3. Weld reinforcement greater than specified in ASME Table 127.4.2
4. Lack of fusion on surface
5. Incomplete penetration (applies only when inside surface is readily accessible)
6. Any other linear indications greater than 3⁄16 in (5.0 mm) long
7. Surface porosity with rounded indications having dimensions greater than 3⁄16 in (5.0 mm) or 4 or more rounded indications separated by 1⁄16 in (2.0 mm) or less edge to edge in any direction. Rounded indications are indications which are circular or elliptical with their length less than 3 times their width

Source: From ASME B31.1 1995 ed.

Extent of Examination. The applicable code will define the extent of examination required for piping systems under its coverage. The degree of examination and the examination method and alternatives are a function of the degree of hazard which might be expected to occur in the event of failure. Pressure, temperature, toxicity of the fluid, and release of radioactive substances are some of the considerations. Added layers of examinations may be required as the perceived hazard increases.

Accept-Reject Criteria. The applicable code will also define the items to be examined and the accept-reject criteria to be applied. Table A6.9 shows the acceptance standards applicable to the visual examination of butt welds under B31.1. Other piping codes have similar but not necessarily identical criteria.

Table A6.10 shows acceptance standards for radiographic examination. Indications interpreted as cracks, incomplete penetration, or lack of fusion are not permitted. Porosity and elongated indications are kept within certain limits. The acceptance standards for ultrasonic examination are similar.

TABLE A6.10 Acceptance Standards for Radiography

Welds that are shown by radiography to have any of the following types of discontinuities are unacceptable:

1. Any type of crack or zone of incomplete fusion or penetration
2. Any other elongated indication with a length greater than
   - *a.* 1⁄4 in (6.0 mm) for t up to 3⁄4 in (19.0 mm)
   - *b.* 1⁄3 t for t from 3⁄4 in (6.0 mm) to 2 1⁄4 in (57.0 mm) inclusive
   - *c.* 3⁄4 in (19.0 mm) for t over 2 1⁄4 in (57.0 mm) where t is the thickness of the thinner portion of the weld
3. Any group of indications in a line that have an aggregate length greater than t in a length of 12 t, except where the distance between successive indications exceeds 6L where L is the longest indication in the group
4. Porosity in excess of that shown as acceptable in Appendix A-250 of Section I of the Boiler and Pressure Vessel Code
5. Root concavity when there is an abrupt change in density indicated on the radiograph

Note: t pertains to the thickness of the weld being examined. If a weld joins two members having different thicknesses at the weld, t is the thinner of these thicknesses.

Source: ASME B31.1 1995 ed.

TABLE A6.11 Acceptance Standards for Magnetic Particle and Liquid Penetrant Examinations

---

The following relevant indications are unacceptable:

1. Any cracks or linear indications
2. Rounded indications with dimensions greater than 3⁄16 in (5.0 mm)
3. Four or more rounded indications in a line separated by 1⁄16 in (2.0 mm) or less edge to edge
4. Ten or more rounded indications in any 6 in^2 (3870 mm^2) of surface with the major dimension of this surface not to exceed 6 in (150 mm) with the area taken in the most unfavorable location relative to the indications being evaluated

Source: From ASME B31.1 1995 ed.

Both magnetic particle and liquid penetrant examinations have identical limits. See Table A6.11

Other types of NDEs, such as acoustic emission, bubble testing, and mass spectrometer testing, are not required by the various codes. They can be invoked by contract and the acceptance standards must be a matter of agreement between the contracting parties.

Testing. All of the piping codes outline some type of pressure test to determine leak tightness. Since the completed piping system is usually subjected to some type of test in the field after installation, shop testing of subassemblies is infrequent. In those cases where the assembly cannot be field tested, where welds in the assembly will not be exposed for examination during the field test, and in other special situations, shop testing may be required. Shop testing must meet all of the requirements for field testing. See the section ‘‘Installation’’ for particulars.

Quality Assurance and Quality Control. ASME Section III has very specific requirements for QA programs. ASME Section I has requirements for QC programs. The B31 Piping Codes do not require any formal written program at this time. Refer to these codes for detailed information on this subject.

Cleaning and Packaging. Cleanliness of piping subassemblies is a matter of agreement between the fabricator and purchaser. As a minimum the fabricator will clean the inside of the subassembly of loose scale, weld spatter, machining chips, etc., usually with jets of compressed air. For those systems which require a greater degree of cleanliness several options are available. For specific information refer to PFI Standard ES-5 ‘‘Cleaning of Fabricated Pipe.’’[39] See also the following specifications published by the Steel Structures Painting Council:[40]

SSPC—SP 2 Hand Tool Cleaning

SSPC—SP 3 Power Tool Cleaning

SSPC—SP 6 Commercial Blast Cleaning

SSPC—SP 8 Pickling

SSPC—SP 10 Near-white Blast Cleaning

For ferritic steels the inside surfaces may be cleaned by turbinizing to remove loosely adhering mill scale and heavy rust. Wire brushing and grinding may also be employed for removal of more tightly adhering scale, rust, etc.; however, the most effective method for removal of tight scale is blasting with sand, shot, or grit.

For guidance on blasting methods and degrees of cleanliness refer to PFI Standard ES-29 "Abrasive Blast Cleaning of Ferritic Piping Materials."[41]

Pickling is an equally effective method of cleaning. It is most often used for cleaning large quantities of straight tubes prior to fabrication or small-size (about NPS 4) subassemblies where blasting is not as effective. Its application is limited by the availability and size of pickling tanks. A hot solution of sulfuric acid (H_2SO_4) is most commonly used, although cold hydrochloric acid (HCl) is also recommended. See SSPC—SP 8 "Pickling."

For the 9Cr-1Mo-V materials, aluminum-oxide or silicon-carbide grit, sand or vapor blasting is preferred. Steel shot or grit which has been previously used to clean iron-bearing materials should be avoided. Acid pickling should also be avoided since damaging hydrogen embrittlement may occur.

Austenitic stainless steels normally do not require cleaning except for a degreasing with solvent-saturated cloths to remove traces of greases or cutting oils. Subassemblies which have been heated for bending or which have been given a carbide solution heat treatment will have a tightly adhering chromic oxide scale. Pickling and passivating in a solution of hydrofluoric and nitric acid will remove the scale and passivate the exposed surface. Here again, the equipment for pickling may limit the size of the subassembly. See ASTM A 380 published by the American Society for Testing Materials.[42] Blasting may also be used, but new silica sand or aluminum-oxide grit is required. Sand or grit previously used on ferritic pipe will contaminate the pipe surface with iron particles, and it will subsequently rust. The blasted surface should be treated with a solution of nitric acid to passivate the surface.

For extreme cleanliness, steam degreasing and rinsing with demineralized water may be employed.

The external surfaces of pipe may be left as is, painted, or otherwise preserved. See PFI Standard ES-34 "Painting of Fabricated Piping."[43]

Depending on the need for maintaining rust-free interior surfaces, the pipe inside diameter may be coated with different preservatives, or desiccants may be employed during shipping and storage.

For shipping, the ends of subassemblies are equipped with some type of end protection to preclude damage to weld end bevels or flange faces during shipment and field handling. See PFI Standard ES-31 "Standard for Protection of Ends of Fabricated Piping Assemblies."[44]

During shop operations, it is common practice to move piping assemblies with overhead or floor cranes, usually with chain or wire rope slings. For austenitic stainless steels and nonferrous materials which could be damaged or contaminated, use of nylon slings is recommended.

INSTALLATION

Drawings

Drawings used for piping system installation may vary greatly. Often orthographic projections of the building showing several systems or single systems, depending on complexity, are used. In many cases single or multiple isometric drawings of a single system are used. These of course are not to scale but are convenient for planning, progress recording, or record keeping when required by quality programs. In all cases where prefabricated subassemblies are being erected, these drawings will have been marked up to show the locations and mark numbers of the individual subassemblies, the location and designations of field welds, and the locations and markings of hangers.

Erection Planning

Planning is vitally important in installing a piping system. Many factors must be considered, among them accessibility to the building location, coordination with other work, availability and accessibility of suitable welding and heat treatment equipment, availability and qualification of welders and welding procedures, rigging, scaffolding, and availability of terminal equipment.

Each of the system components should also be carefully checked to assure correctness. Valves and other specialty items in particular should be checked to assure they are marked with flow arrows, that the handwheels or motor operators are properly oriented, and that the material to be welded is compatible with the material of the piping. Special valves for use in carbon steel systems are sometimes furnished as 5 percent chrome material, and thermowells are often not of the same chemical composition as the pipe. This may not be apparent from the drawings. Such a preliminary check will indicate the need for alternate welding procedures and preclude problems later.

The location of the work and accessibility to it should be viewed. It may not be possible to install an overly long subassembly after other equipment or building structure is in place. A common practice in the power field is to have large, heavy assemblies often found in the main steam and reheat lines of large central stations erected with the structure. In other cases, a preliminary review may show interferences from an existing structure, cable trays, ducts, or other piping which are not apparent from the drawings. The locations of the terminal points on equipment should be checked to assure that they are correct. The type, size, rating, or weld preparation of the connection should be checked to assure that it will match the piping. Solutions to any problems can be devised with the designer before work starts.

The ideal way to begin erection is to start at some major piece of equipment or at a header with multiple outlets. Install the permanent hangers if possible. If these are to be welded to the structure, some prudence should be exercised, since the final location of the line may warrant some small relocation to assure that the hanger is properly oriented relative to the piping in its final position. Obviously a certain number of temporary supports will be needed. Welding of temporary supports to the building structure or to the piping itself should be avoided or used only with the approval of the responsible engineers. Variable spring and constant-support-type hangers should normally be installed with locking pins in place, assuring that they function as a rigid support during the erection cycle. Where welded attachments to the pipe are involved, it is preferred that they be installed in the shop as part of the subassembly.

If possible, the major components of the system should be erected in their approximate final position prior to the start of any welding. This will reveal any unusually large discrepancies which may result from equipment mislocation, fabrication error, or tolerance accumulations. Adjustments or corrections can then be decided upon. Long, multiplane systems can absorb considerable tolerance accumulation without the need to modify any part. Short, rigid systems may not be able to accommodate any tolerance accumulation, and it may be necessary to rework one or more parts.

Cold Spring

Both the B31.1 and B31.3 Codes address cold springing in detail. Cold spring is the intentional stressing and elastic deformation of the piping system during the erection cycle to permit the system to attain more favorable reactions and stresses in the operating condition.

The usual procedure is to fabricate the system dimensions short by an amount equal to some percentage of the calculated expansion value in each direction. The system is then erected with a gap at some final closure weld, equal to the ''cut shorts'' in each direction. Forces and moments are then applied to both ends as necessary to bring the final joint into alignment. Once this is done, it is usually necessary to provide anchors on both sides of the joint to preserve alignment during welding, postweld heat treatment, and final examination. When the weld is completed and the restraining forces are removed, the resulting reactions are absorbed by the terminal points, and the line is in a state of stress. During start-up the line expands as the temperature increases, and the levels of stress and terminal reactions resulting from the initial cold spring will decrease. For the 100 percent cold sprung condition, the reactions and stress will be maximum in the cold condition and theoretically zero in the hot condition. It should be borne in mind that it is very difficult to assure that a perfect cold spring has been attained and for this reason the codes do not permit full credit in the flexibility calculations. Also remember that lines operating in the creep range will ultimately attain the fully relaxed condition. Cold spring merely helps it get there faster. Cold spring was historically applied to high-temperature systems such as main steam and hot reheat lines in central power stations, but this practice is not as prevalent anymore.

For those involved with the repair of lines which have been cold sprung, or which have achieved some degree of creep, caution should be exercised when cutting into such lines since the line will be in a state of stress when cold. The line should be anchored on either side of the proposed cut to prevent a possible accident.

Joint Alignment

In aligning weld joints for field welding it may be necessary to compromise between a perfect weld fit-up and the location of the opposite (downstream) end of the assembly. The weld bevel may not be perfectly square with the longitudinal axis of the assembly. Even a 1⁄32-in (0.8 mm) deviation across the face of the weld bevel can result in an unacceptable deviation from the required downstream location if the joint is aligned as perfectly as possible. Often such a small gap can be tolerated in the welding. If, in order to maintain the downstream location, the gap at the joint is excessive, the joint should be disassembled, and the land filed or ground as needed to attain the required alignment of the weld joint while still maintaining the required downstream position. Flanged connections should be made up hand-tight so that advantage can be taken of the bolt-hole clearances to translate or rotate the assembly for better alignment of downstream connections.

Weld shrinkage of field welds may or may not be important in field assembly. In long flexible systems, they may be ignored. For more closely coupled systems, particularly those using GTAW root-pass welding, this factor should be considered. The degree of longitudinal shrinkage across a weld varies with welding process, heat input, thickness, and weld joint detail. See the section ''Layout, Assembly, and Preparation for Welding.'' In extreme cases closure pieces may be used. Here, the system is completed except for the final piece. A dummy assembly is then fabricated in place and the closure assembly is fabricated to match the dimensions of the dummy assembly with weld shrinkage of the final welds taken into account.

Cutting, Bending, Welding, Heat Treatment, and Examination

Cutting, bending, and welding operations in the field parallel those used in the shop. See the section ‘‘Fabrication.’’

Mechanical and oxyfuel gas cutting are most commonly used in the field. Plasma cutting may occasionally be used.

Bending, if used at all, is limited to small-diameter piping using relatively simple bending equipment at ambient temperatures. Occasionally in order to correct for misalignment, larger-diameter ferritic piping is bent at temperatures below the lower critical. Please note that this procedure is limited to ferritic materials. Any application of heat to austenitic materials will result in sensitization and loss of corrosion properties. See the section ‘‘Bending.’’ For smaller pipe sizes, torches may be used to supply heat, but for larger, heavier-wall materials and where better temperature control is warranted, heat may be applied by induction or resistance heating units in the same manner as local stress relieving. See the section ‘‘Local Heat Treatment.’’ The heating units are applied to the section of the pipe to be bent. The section of the line upstream of the area to be bent should be anchored to preclude translation or rotation of the installed portion of the line. The anchor should preferably be not more than one or two pipe diameters from the area to be heated. Once the bend area has attained the required temperature, a bending force can be applied on the downstream leg of the pipe until the required bend arc has been obtained. Since most ferritic materials still have reasonably high yield strengths even at lower critical temperatures, care should be exercised. Large bending forces may damage the building structure or crack the line being bent. Apply a reasonable force for the conditions and allow the imposed stress in the bend arc to be relieved by the heat. Then repeat. Progress in this fashion until the required bend is accomplished. Some small amount of overbending may be required to offset the deflection which will occur in the unheated section of pipe between the heated arc and the pulling device. When the bend is completed and allowed to cool, all restraints may then be removed. Little if any force should be needed to align the downstream joint; otherwise additional bending may be needed to further correct the situation. No further heat treatment of the bend arc is needed since the temperatures applied in this bending method are below the lower critical temperature. Corrections to lines with large section modulus or where the required bend arc is large should preferably be made in a shop since better controls can be exercised.

Field welding is more often than not in a fixed position. Welders should be qualified in the 6G position since this qualifies for all positions.

Welding will be done using SMAW, GMAW, FCAW, and GTAW. Some welding processes can be automated using orbital welding techniques. Such practice can result in fewer repairs, provided the bevels and alignment are within tolerance and the welding parameters are carefully selected.

Field postweld heat treatment also follows the practices outlined in the section ‘‘Heat Treatment’’ for local stress-relieving of ferritic materials. This usually involves induction or resistance heating units with recording devices. For small pipe welds, torch heating using temperature-sensitive crayons to control temperature is sometimes used. Exothermic heating to stress-relieve welds is still used on occasion for outdoor applications where heating rates are not required to be controlled.

Exothermic materials are preformed to pipe contour and sized to reflect the wall thickness and desired stress-relieving temperature. They are placed around the weld and ignited, attaining temperature in 5 or 10 min. The actual maximum temperature attained may vary.

NDE in the field will follow the practices outlined in the section "Verification Activities." Radiography is usually limited to radioactive isotopes, although occasionally X-ray equipment may find a use. Most surface examination is conducted using liquid-penetrant methods, since magnetic particle equipment is not as convenient in the field. Ultrasonics are used for thickness verification and in certain situations as an alternative to radiography of welds when permitted by the governing code.

Mechanical Joints

Threaded joints probably represent the oldest method of joining piping systems. The dimensional standards for taper pipe threads are given in ASME B1.20.1.[45] This document gives all required dimensions including number of threads per inch, pitch diameter, and normal engagement lengths for all pipe diameters. Thread cutting should be regarded as a precise machining operation. A typical threading die is shown on Fig. A6.27. For steel pipe the lip angle should be about 25°, but for brass it should be much smaller. Improper lip angle results in rough or torn threads. Since pipe threads are not perfect, joint compounds are used to provide leak tightness. The compounds selected, of course, should be compatible with the fluid carried and should be evaluated for possible detrimental effects on system components. Manufacturers' recommendations should be followed.

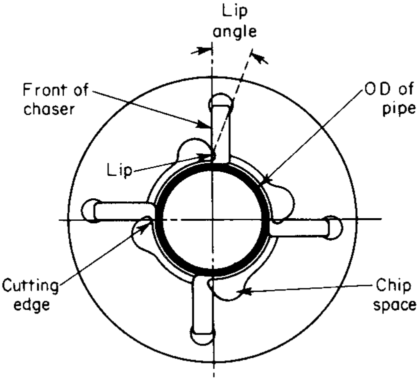

FIGURE A6.27 Threading die.

Where the presence of a joint compound is undesirable, dryseal pipe threads in accordance with ASME B1.20.3[46] may be employed. These are primarily found in hydraulic and pneumatic control lines and instruments.

Flanged joints are most often used where disassembly for maintenance is desired. A great deal of information regarding the selection of flange types, flange tolerances, facings and gasketing, and bolting is found in B16.5. The limitations regarding cast-iron-to-steel flanges, as well as gasket and bolting selection, should be carefully observed. The governing code will usually have further requirements.

Gasket surfaces should be carefully cleaned and inspected prior to making up the joint. Damaged or pitted surfaces may leak. Appropriate gaskets and bolting must be used. The flange contact surfaces should be aligned perfectly parallel to each other. Attempting to correct any angular deviation perpendicular to the flange faces while making up the joint may result in overstressing a portion of the bolts and subsequent leakage. The proper gasket should be inserted making sure that it is centered properly on the contact surfaces. Bolts should be tightened hand-tight. If necessary for alignment elsewhere, advantage may be taken of the bolt hole tolerances to translate or rotate in the plane of the flanges. In no case should rotation perpendicular to the flange faces be attempted. When the assembly is in its final location, bolts should be made up wrench-tight in a staggered sequence. The bolt loading should exert a compressive force of about twice that generated by the internal pressure to compensate not only for internal pressure but for any bending loads which may be imposed on the flange pair during operation. For a greater guarantee against leakage, torque wrenches may be employed to load each bolt or stud to some predetermined value. Care should be exercised to preclude loading beyond the yield point of the bolting. In other cases, special studs that have had the ends ground to permit micrometer measurement of stud elongation may be used. Flange pairs which are to be insulated should be carefully selected since the effective length of the stud or bolt will expand to a greater degree than the flange thicknesses, and leakage will occur. Thread lubricants should be used, particularly in high-temperature service to permit easier assembly and disassembly for maintenance.

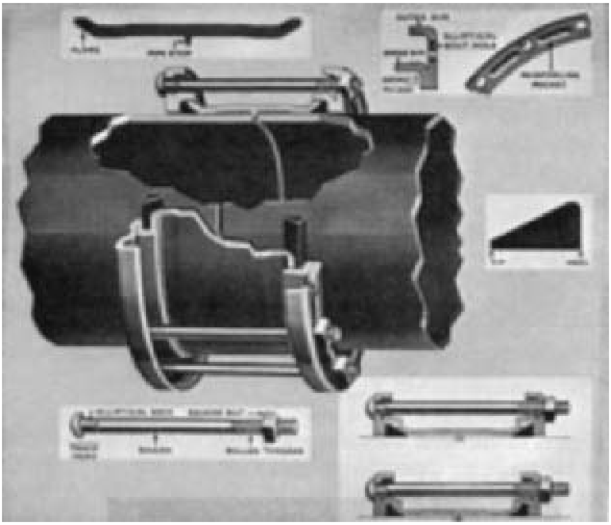

FIGURE A6.28 Compression sleeve (Dresser) coupling for plain-end cast-iron or steel pipe.

There are a great variety of mechanical joints used primarily for buried cast-iron pipelines carrying water or low-pressure gas. They are primarily of the bell and spigot type with variations involving the use of bolted glands, screw-type glands, and various types of gasketing. The reader is referred to AWWA Standards C 111,[47] C 150,[48] and C 600,[49] and to catalogs for proprietary types. For reinforced concrete pipe, AWWA Standards C 300,[50] C 301,[51] and C 302,[52] should be consulted. Compression-sleeve couplings such as the Dresser coupling (see Fig. A6.28) and the Victualic coupling (see Fig. A6.29) are widely used for above- and below-ground services, both with cast-iron and steel pipe. Consult the manufacturers' catalogs for more information. Refer to Chap. A9 of this handbook.

Tubing

Copper, aluminum, steel, and stainless-steel tubing are frequently used in hydraulic, pneumatic, and sampling systems. Installation is most often concerned with protection of such materials from damage, since they are often associated with control systems. The manner of protection is left to the designer's judgment.

Lighter wall tubing is often bent using small compression-type benders. Tubing is joined to itself and to pipe-size fitting and components with a variety of proprietary tubing fittings which are described in Chap. A2. Some heavier-wall stainless-steel tubing is welded using specially designed socket welding fittings. GTAW welding with filler metal added is used for such applications.

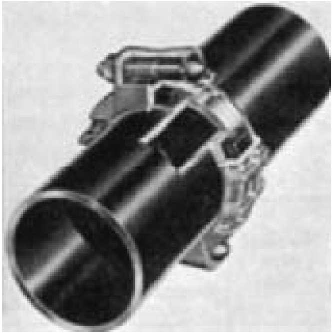

FIGURE A6.29 Victualic coupling for grooved-end cast-iron or steel pipe.

Pipe Supports

This section offers some thoughts on the installation of piping supports. The design, manufacture, and influence of supports on the system flexibility are outlined in Chaps. B4 and B5 of this book.

As pointed out earlier, economics and efficiency dictate that it is preferable to install the permanent supports for a system as the first step, thus minimizing the need for temporary supports. In so doing considerable judgment should be exercised, since there can be minor variations between the as-designed and as-installed line location. Resilient and constant-effort support should be locked with stops to preclude change in supporting effort as the line is being installed. Only after the line has been completely welded, tested, and insulated should the stops be removed. Once removed, the resilient and constant-effort supports should be carefully adjusted to their ''cold'' positions. This may take several iterations, since adjustment of any one will change the loading on the adjacent ones. Systems with multiple constant-effort supports can be especially troublesome. Since the support design is most often based on theoretical values of weight of the pipe, insulation, and the fluid, there will be some difference between the actual and calculated supporting effort. Where rigid supports are involved, this variation will be taken up automatically. Where a system is designed with multiple resilient or constant-effort supports, every effort should be made to incorporate one or more rigid supports in the design to absorb the variation between actual and theoretical loads. Otherwise it may be necessary, with the approval of the designer, to modify the spring load-carrying settings.

As the line goes to operating temperature, it should be carefully observed to assure that there are no unforeseen interferences with its required expansion, particularly at nearby structures, floor sleeves, or adjacent lines or by restrained branch connections. Some modification may be required to assure free expansion of the line. All resilient supports and constant-effort supports should be checked during initial start-up to assure that they are functioning properly, and after the line has been at operating temperature for several hours, they should be checked to verify that they are in the required "hot" operating condition. It may be necessary to readjust some units to match the calculated "hot" loading. These settings should be checked on a regular basis for the first few weeks of service, particularly in systems operating in the creep range, since the temperature will begin to relieve locked-in construction stresses, and the line may choose a different, more relaxed location. Readjustments may be required. If after some time in service, the resilient and constant-effort supports still require significant adjustment (i.e., the system cannot be balanced), a complete review of the flexibility analysis, expansion calculations, weight calculations, hanger, design, and installation procedures should be made to determine the cause. Resilient and constant-effort support units which are not functioning in the spring range (i.e., they have become "solid" or "loose") may impose undesirably high stresses in the line if they are not corrected, which can lead to premature failure or significantly reduced system life.

Leak Testing

At one time, complex shapes were pressure-tested to determine their suitability for the service intended. This involved stressing the component to a point above service stresses, but below bursting stress, and was referred to as a pressure test. Currently most codes require some type of test to determine leak tightness rather than service suitability.

The most common method of leak testing for piping systems is the hydrostatic test. Usually this involves water at ambient temperature as the test medium. B31.1 requires that the system be pressurized to 1.5 times the design pressure, ASME III, to 1.25 times the design pressure, and B31.3 requires a test pressure of 1.5 times the design pressure adjusted by the ratio of the allowable stress at test temperature divided by the allowable stress at operating temperature. In each case, however, the test pressure of unisolated equipment or some function of the yield stress of the line material may be a limiting factor. See the applicable code for particulars. The line must be held at test pressure for at least 10 min, but may be reduced as permitted in the applicable code until the examination for leakage is complete.

Depending on the specific situation, alternative test fluids may be employed. As an example, in a liquid sodium system, where water could be very hazardous, or in cases where the possibility of freezing exists, a hydrocarbon or other fluid might be used.

In instances where water or other liquids are unacceptable, or where supports may not be adequate to carry the added weight of water, pneumatic tests may be performed. Pneumatic tests are potentially more dangerous than hydrostatic tests, and extreme care should be exercised. B31.1 and ASME III require the pneumatic test be performed at not less than 1.2 times the design pressure, while B31.3 limits the test to 1.1 times design. In each case, the limits regarding equipment and yield strength previously cited for hydrostatic tests also apply.

Prior to the test a detailed review of the section of the line to be tested should be made with the following in mind:

1. Temporary supports for those sections where the permanent supports were not designed to take the additional weight of the test fluid.
2. Isolation or restraints on expansion joints.
3. Isolation of equipment or valves which may be overstressed at test pressure.

4. Location of test pump and the need for additional test gauges if there is a significant head variation due to elevation differential.
5. Location of vents and drains.
6. Location of a relief valve to preclude excessive overpressure due to possible thermal expansion of the test fluid.
7. Consideration of the probable ambient test temperature relative to the expected brittle fracture toughness of the system materials. Heating the water may be a solution.
8. Alternative test fluid.
9. Accessibility to the weld joints for inspection. Some codes require that the weld joints be left exposed until after the test.
10. Assurance that no part of the system will exceed 90 percent of its yield strength.

It is advisable to prepare a written procedure outlining the scope and boundaries of each test to assure that it is performed in a safe manner. The codes vary a bit on the required test pressures, time at test pressure, pressure during inspection for leakage, and whether alternative tests may be performed. It is advisable to look at each one specifically. For more details, refer to Chap. B14 of this handbook.

REFERENCES

1. ASME 31.1, ‘‘Power Piping Code,’’ American Society of Mechanical Engineers, 345 East 47th Street, New York, NY 10017.
2. ASME Section I, ‘‘Power Boiler Code,’’ ASME.
3. ASME Section III, ‘‘Nuclear Power Plant Components,’’ ASME.
4. ASME Section V, ‘‘Nondestructive Examination,’’ ASME.
5. ASME Section IX, ‘‘Welding and Brazing Qualifications,’’ ASME.
6. ASME B36.10M, ‘‘Welded and Seamless Wrought Steel Pipe,’’ ASME.
7. ASME B16.5, ‘‘Pipe Flanges and Flanged Fittings,’’ ASME.
8. Manufacturers Standardization Society of the Valve and Fitting Industry, Inc., 127 Park Street, N.E., Vienna, VA 22180.
9. American Petroleum Institute, 1220 L Street, N.W., Washington, DC 20005.
10. Pipe Fabrication Institute, P.O. Box 173, Springdale, PA 15144.
11. American Welding Society, 550 N.W. LeJeune Road, Miami, FL 33126.
12. ASME B16.34, ‘‘Valves—Flanged, Threaded and Welding End,’’ ASME.
13. ASME B16.9, ‘‘Wrought Steel Butt Welding Fittings,’’ ASME.
14. ASME B16.1, ‘‘Cast-Iron Pipe Flanges and Flanged Fittings,’’ ASME.
15. PFI ES-3, ‘‘Fabricating Tolerances,’’ PFI.
16. *Welding Handbook,* Seventh ed., American Welding Society, 550 N.W. LeJeune Road, Miami, Fl 33126.
17. Harvey, John F., *Theory and Design of Modern Pressure Vessels,* Second ed., p 47, Van Nostrand Reinhold Company, New York, NY 10001.
18. ASME B31.3, ‘‘Process Piping,’’ ASME.
19. PFI ES-24, ‘‘Pipe Bending Methods, Tolerances, Process and Material Requirements,’’ PFI.

20. *The Metals Handbook,* American Society for Metals, Metals Park, OH 44073.
21. Copper Development Assn., Inc., Greenwich Office Park 2, P.O. Box 1840, Greenwich, CT 06836.
22. Huntington Alloys, Inc., Guyan River Road, P.O. Box 1958, Huntington, WV 25720.
23. ASME B31.4, "Liquid Transportation Systems for Hydrocarbons, Liquid Petroleum Gas, Anhydrous Ammonia and Alcohols," ASME.
24. ASME B31.8, "Gas Transmission and Distribution Piping Systems," ASME.
25. ASME B31.11, "Slurry Transportation Piping Systems," ASME.
26. API 1104, "Standard for Welding Pipe Lines and Related Facilities," American Petroleum Institute.
27. ASME B31.5, "Refrigeration Piping," ASME.
28. AWS D10.9, "Qualification of Welding Procedures and Welders for Pipe and Tubing, Specification for," AWS.
29. ASME Section II, Part C, "Welding Rods, Electrodes and Filler Metals," ASME.
30. PFI ES-21, "Internal Machining and Fit-up of GTAW Root Pass Circumferential Butt Welds," PFI.
31. PFI ES-7, "Minimum Length and Spacing for Welded Nozzles," PFI.
32. PFI ES-1, "Internal Machining and Solid Machined Backing Rings for Circumferential Butt Welds," PFI.
33. Sosnin, H. A., *The Theory and Technique of Soldering and Brazing of Piping Systems,* NIBCO INC. Elkhart, IN 46514.
34. Linnert, George E., *Welding Metallurgy,* Third ed., Vol. 2, American Welding Society.
35. United States Steel, *The Making, Shaping and Treating of Steel,* Tenth ed., Association of Iron and Steel Engineers, Suite 2350, Three Gateway Center, Pittsburgh, PA 15222.
36. American Society for Nondestructive Testing, 1711 Harlingate Lanes, P.O. Box 28518, Columbus, OH 43228-0518.
37. SNT-TC-1A, "Personnel Qualification and Certification in Nondestructive Testing," ASNT.
38. AWS QC-1, "Standards and Guide for Qualification and Certification of Welding Inspectors," AWS.
39. PFI ES-5, "Cleaning of Fabricated Pipe," PFI.
40. Steel Structures Painting Council, 4400 Fifth Ave., Pittsburgh, PA 15213.
41. PFI ES-29, "Internal Abrasive Blast Cleaning of Ferritic Piping Materials," PFI.
42. ASTM A-380, "Standard Practice for Cleaning and Descaling Stainless Steel Parts, Equipment and Systems," American Society for Testing Materials, 1916 Race St. Philadelphia, PA 19103-1187.
43. PFI ES-34, "Painting of Fabricated Pipe," PFI.
44. PFI ES-31, "Standard for Protection of Ends of Fabricated Piping Assemblies," PFI.
45. ASME B1.20.1, "Pipe Threads, General Purpose (inch)," ASME.
46. ASME B1.20.3, "Dryseal Pipe Threads," ASME.
47. C-111/A21.11, "Rubber Gasketed Joint for C.I. Pipe and Fittings," American Water Works Association, 6666 W. Quincy Ave., Denver, CO 80235.
48. C-150/A21.50, "Thickness Design of Ductile Iron Pipe," AWWA.
49. C-600, "Installation of C.I. Water Mains," AWWA.

50. C-300, ‘‘Reinforced Concrete Water Pipe—Steel Cylinder Type—Not Prestressed,’’ AWWA.
51. C-301, ‘‘Reinforced Concrete Water Pipe—Steel Cylinder Type—Prestressed,’’ AWWA.
52. C-302, ‘‘Reinforced Concrete Water Pipe—Non-Cylinder Type—Not Prestressed,’’ AWWA.

CHAPTER A7
BOLTED JOINTS

Gordon Britton
President, INTEGRA Technologies Limited
Sarnia, Ontario, Canada

INTRODUCTION

While other chapters of the *Piping Handbook* deal with the pressure integrity of the piping system, this chapter deals with managing the leak integrity of bolted flanged systems. It covers the main elements of a bolted joint system to provide an understanding of the bolted joint connection and the science of joint sealing.

This chapter focuses exclusively on bolted joints subjected to internal pressures. While integrity of mechanical (structural) joints are also critical, they are not covered in this book.

Oil, gas, and power plants and other process industries are under constant pressure to work their plants at maximum design limitations and for longer periods. The bolted joint is often regarded as the weak link in the plant's pressure envelope. Whether a pipe flange, heat exchanger, reactor manway, or valve bonnet, the joint integrity relies not only on the mechanical design of the flange and its components, but also on its condition, maintenance, and assembly. Plant personnel are looking for equipment to achieve leak-free joints with reduced shutdown periods while increasing the time between shutdowns. Similarly, flanged joints in other piping and distribution systems found throughout industrial, commercial, and residential facilities are required to maintain their structural integrity and leak tightness.

Several standards have been written to enable designers to design bolted joints. Compliance to the requirements of these standards ensures mechanical integrity of bolted joints. However, these standards do not provide adequate and effective requirements or guidelines to assure leak integrity of flanged joints.

To achieve leak integrity, a broader view of the bolted flange joint as a system must be adopted. Ideally, a process is to be followed that manages the key elements of the bolted system, which allows the design potential of the bolted joint to be realized and helps in achieving continued leak-free operation.

This chapter reviews the process required to achieve flange-joint integrity.

COST OF A LEAK

Some believe leaking flanges are normal and leaks cannot be prevented. Some also hold similar views about health and safety. Safety professionals now know that accidents can be prevented and that the goal of zero accidents is achievable. The goal of zero leaks is also achievable. Leaks are still very commonplace. A thorough survey throughout North American industry, performed by Pressure Vessel Research Council (PVRC), concluded that the average plant experiences 180 leaks per year. A breakdown of the severity of these leaks is shown in Fig. A7.1.

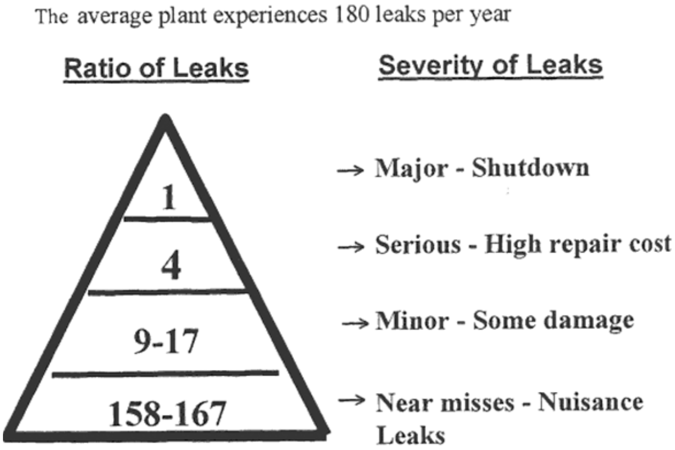
The average plant experiences 180 leaks per year
Ratio of Leaks
Severity of Leaks
1
4
9-17
158-167
→ Major - Shutdown
→ Serious - High repair cost
→ Minor - Some damage
→ Near misses - Nuisance Leaks

FIGURE A7.1 Industry leak study (PVRC Study, July 1985).

In a manner similar to accident ratio statistics, there is a relationship between minor, serious, and other dangerous events. All events represent failure in control. Failures in control that result in leaks cost industry millions of dollars yearly due to:

- Emission
- Pollution, spills
- Rework
- Leak sealing
- Fires
- Lost product
- Late schedules
- Forced shut downs—production losses

Control is the issue. Leaks are controllable. Control is achieved by implementation of a Flange Joint Integrity program. Joint Integrity is a control program that becomes an integral part of a plant's safety and reliability.

THE PROCESS OF JOINT INTEGRITY

To assist in managing a process, ask yourself the following questions: why, what, who, and how?

Why do we need a Flange Joint Integrity program? This was addressed in the previous section, "Cost of a Leak." The stakes are enormous. A Flange Joint Integrity program will help improve plant safety and reliability while reducing its environmental impact.

What do we need to control? The operating environment, the components, and assembly all need to be controlled.

Who do we need to control? The designers, field operatives, and supervisors.

How do we control? Train personnel to required competency. Design components using latest engineering standards. Develop best practices for assembly and maintenance. Implement a quality assurance program that provides traceability and ensures compliance to specifications.

There are over 120 variables that affect flange joint integrity. These can be controlled through the following categories:

- Environment (internal and external)
- Components
- Assembly

The internal environment outlines the design and operating conditions of temperature, pressure, and fluid. With the external environment, consideration is given to location of the flange, whether it is operating in air or sub-sea, and externally applied piping loads. An understanding of the environment is crucial to the design and selection of the appropriate components with the correct assembly methods.

The components include the most appropriately designed and selected flange, gasket, and bolting, commensurate with the risk dictated by the environment.

Assembly includes checking the condition of the components and proceeding according to established procedures. Proper assembly requires that

- Flange faces meet the standards
- Gasket-seating stress is achieved
- Bolts, nuts, and gaskets are free of defects
- Appropriate lubrication is used

Execution requires trained, competent people using the correct tools and following procedures.

The steps in the joint integrity process are shown in Fig. A7.2.

FLANGE JOINT COMPONENTS

Flanges

There are numerous types of flanges available. The type and material of flanges is dependent on the service environment. The service environment is specified in the Piping and Instrumentation Drawing (P&ID) and other design documents. Refer

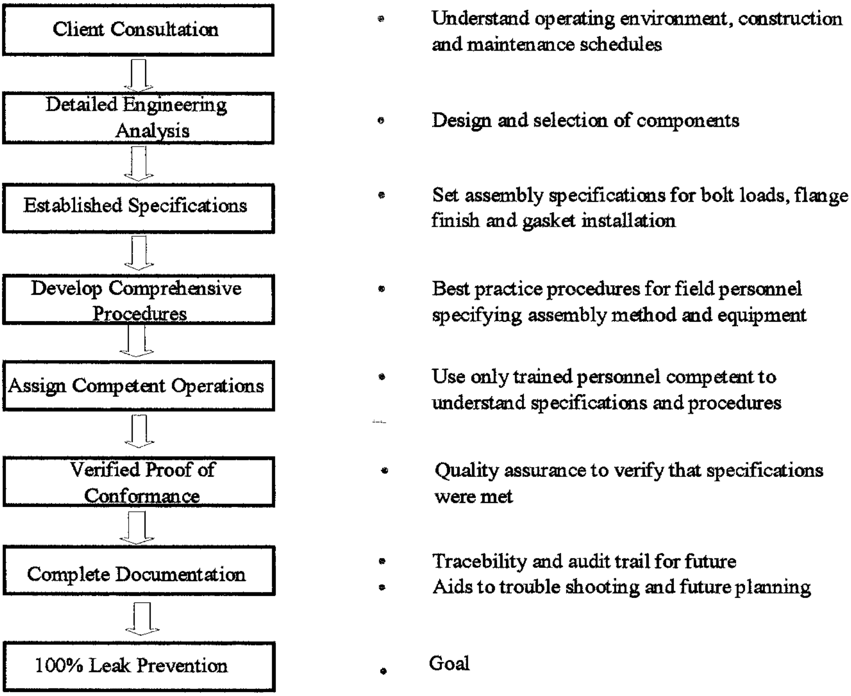
Client Consultation
Understand operating environment, construction and maintenance schedules
Detailed Engineering Analysis
Design and selection of components
Established Specifications
Set assembly specifications for bolt loads, flange finish and gasket installation
Develop Comprehensive Procedures
Best practice procedures for field personnel specifying assembly method and equipment
Assign Competent Operations
Use only trained personnel competent to understand specifications and procedures
Verified Proof of Conformance
Quality assurance to verify that specifications were met
Complete Documentation
Tracebility and audit trail for future
Aids to trouble shooting and future planning
100% Leak Prevention
Goal

FIGURE A7.2 Steps in joint integrity process.

to Chap. B1 of this handbook. Selection of flange materials is done in conjunction with piping specification.

Flange Standards

There are a variety of standards used in the design and selection of flanges. The following codes and standards relate to pipe flanges:

ASME Codes and Standards:

B16.1	Cast Iron Flanges and Flanged Fittings
B16.5	Pipe Flanges and Flanged Fittings
B16.24	Bronze Flanges and Fittings–150 and 300 Classes
B16.42	Ductile Iron Pipe Flanges and Flanged Fittings–150 and 300 Classes
B16.47	Large Diameter Steel Flanges

Section VIII

Division 1	Pressure Vessels
Appendix 3	Mandatory Rules for Bolted Flange Connections

ANSI/AWWA Standards

C-111/A21.15	Flanged C.I. Pipe with Threaded Flanges
C-207	Steel Pipe Flanges

API Specifications

Spec 6A-96	Specification for Wellhead and Christmas Tree Equipment

The two most commonly used flange standards for process and utilities pipework are ASME B16.5 and BS 1560 (British Standards). API 6A (American Petroleum Institute) specifies flanges for wellhead and Christmas tree equipment. Less common flange standards which may be encountered are flanges for metric or DIN standards.

Refer to Chap. A4 for other codes and standards.

Flange-End Connection

The flange-end connection defines the way in which it is attached to the pipe. The following are commonly available standard flange end types:

Weld-Neck (WN) Flange. Weld-neck flanges are distinguished from other types by their long, tapered hub and gentle transition to the region where the WN flange is butt-welded to the pipe. The long, tapered hub provides an important reinforcement of the flange, increasing its strength and resistance to dishing. WN flanges are typically used on arduous duties involving high pressures or hazardous fluids.

The butt-weld may be examined by radiography or ultrasonic inspection. Usually, the butt-welds are subject to visual, surface, or volumetric examinations, or a combination thereof, depending on the requirements of the code of construction for piping or a component. There is, therefore, a high degree of reliability in the integrity of the weld. A butt-weld also has good fatigue performance, and its presence does not induce high local stresses in the pipework.

Socket-Weld (SW) Flange. Socket-weld flanges are often used on hazardous duties involving high pressure but are limited to a nominal pipe size NPS 2 (DN 50) and smaller. The pipe is fillet-welded to the hub of the SW flange. Radiography is not practical on the fillet weld; therefore correct fitting and welding is crucial. The fillet weld may be inspected by surface examination, magnetic particle (MP), or liquid penetrant (PT) examination methods.

Slip-on Flanges. Slip-on flanges are preferred to weld-neck flanges by many users because of their initial low cost and ease of installation. Their calculated strength under internal pressure is about two-thirds of that of weld-neck flanges. They are typically used on low-pressure, low-hazard services such as fire water, cooling water, and other services. The pipe is ‘‘double-welded’’ to both the hub and the bore of the flange, but, again, radiography is not practical. MP, PT, or visual examination is used to check the integrity of the weld. When specified, the slip-on flanges are used on pipe sizes greater than NPS 2½ (DN 65).

Composite Lap-Joint Flange. This type of flanged joint is typically found on high alloy pipe work. It is composed of a hub, or ‘‘stub end,’’ welded to the pipe and a backing flange, or lapped flange, which is used to bolt the joint together. An alloy hub with a galvanized steel backing flange is cheaper than a complete alloy flange. The flange has a raised face, and sealing is achieved with a flat ring gasket.

Swivel-Ring Flange. As with the composite lap-joint flange, a hub will be butt-welded to the pipe. A swivel ring sits over the hub and allows the joint to be bolted together. Swivel-ring flanges are normally found on sub–sea services where the swivel ring facilitates flange alignment. The flange is then sealed using a ring-type joint (RTJ) metal gasket.

Blind Flange. Blind flanges are used to blank off the ends of piping, valves, and pressure vessel openings. From the standpoint of internal pressure and bolt loading, blind flanges, particularly in the larger sizes, are the most highly stressed of all the standard flanges. However, since the maximum stresses in a blind flange are bending stresses at the center, they can be safely permitted to be stressed more than other types of flanges.

These common flange types are shown in Fig. A7.3.

Flange Faces

There are five types of flange faces commonly found. The surface finish of the faces are specified in the flange standards quoted above.

Raised Face (RF). The raised face is the most common facing employed with bronze, ductile iron, and steel flanges. The RF is 1⁄16-in high for Class 150 and Class 300 flanges and 1⁄4-in high for all pressure classes, higher than Class 300. The facing on a RF flange has a concentric or phonographic groove with a controlled surface finish. Sealing is achieved by compressing a flat, soft, or semimetallic gasket between mating flanges in contact with the raised face portion of the flange.

Ring-Type Joint (RTJ). This type is typically used in the most severe duties, for example, in high-pressure-gas pipe work. Ring-type metal gaskets must be used on this type of flange facing.

> **RTJ for API 6A Type 6B, BS 1560 and ASME B16.5 Flanges**
> The seal is made by plastic deformation of the RTJ gasket into the groove in the flange, resulting in intimate metal-to-metal contact between the gasket and the flange groove. The faces of the two opposing flange faces do not come into contact because a gap is maintained by the presence of the gasket. Such RTJ flanges will normally have raised faces, but flat faces may also be used or specified.
>
> **RTJ for API 6A Type 6BX Flanges**
> API 6A Type 6BX flanges have raised faces. These flanges incorporate special metal ring joint gaskets. The pitch diameter of the ring is slightly greater than the pitch diameter of the flange groove. This factor preloads the gasket and creates a pressure-energized seal. A Type 6BX flange joint that does not achieve face-to-face contact will not seal and, therefore, must not be put into service.

Flat Face (FF). Flat-face flanges are a variant of raised face flanges. Sealing is achieved by compression of a flat nonmetallic gasket (very rarely a flat metallic

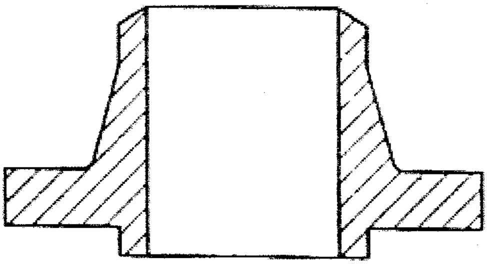

a) Weld Neck Flange

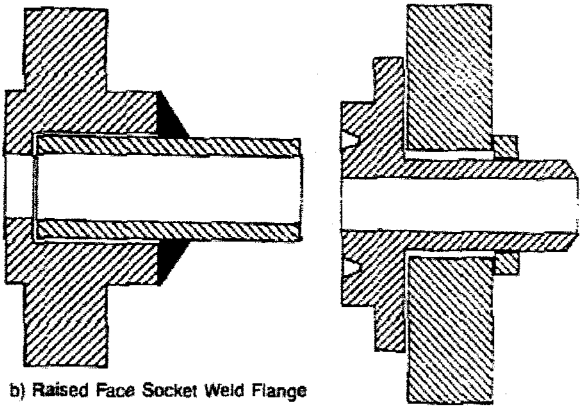

b) Raised Face Socket Weld Flange

e) Swivel Ring Flange

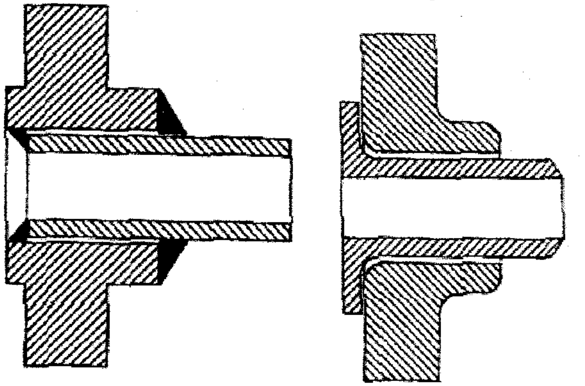

c) Raised Face Slip-On Weld Flange

d) Composite Lap Joint Flange

FIGURE A7.3 Common flange types.

gasket) between the grooved surfaces of the mating FF flanges. The gasket fits over the entire face of the flange. FF flanges are normally used on the least arduous of duties, such as low pressure water piping having Class 125 and Class 250 flanges and flanged valves and fittings. In this case the large gasket contact area spreads the flange loading and reduces flange stresses.

Note: Both ASME B16.5 and BS 1560 specify flat face flanges and raised face flanges as well as RTJ flanges. API 6A is specific to RTJ flanges only.

Male and Female Facings. The female face is 3⁄16-in deep, the male face is 1⁄4-in high, and both are smooth finished. The outer diameter of the female face acts to locate and retain the gasket. Custom male and female facings are commonly found on the heat exchanger shell to channel and cover flanges.

Tongue-and-Groove Facings. Tongue-and-groove facings are standardized in both large and small types. They differ from male-and-female in that the inside diameters of the tongue-and-groove do not extend into the flange base, thus retaining the gasket on its inner and outer diameter. These are commonly found on pump covers and valve bonnets.

Flange Specification and Identification

A flange is specified by the following information:

Type and Facing. The flange is specified according to whether it is, for example, ‘‘weld-neck RTJ’’ or ‘‘socket-weld RF.’’ Ring joint facing and RTJ gasket dimensions for ASME B16.5 are shown in Table A7.1.

Nominal Pipe Size (NPS). This is a dimensionless designation to define the nominal pipe size (NPS) of the connecting pipe, fitting, or nozzle. Examples include NPS 4 and NPS 6.

Flange Pressure Class. This designates the pressure temperature rating of the flange, which is required for all flanges. Examples include Classes 150, 300, 900, and 1500.

Standard. Basic flange dimensions for ASME B16.5 are shown in Table A7.2. Examples include ASME B16.5, BS 1560, DIN or API 6A.

Material. A material specification for flanges must be specified and be compatible to the piping material specifications.

Pipe Schedule. This is only for WN, composite lap-joint and swivel-ring flanges where the flange bore must match that of the pipe, such as schedule 40, 80, 120, and 160.

Gaskets

A gasket is a material or combination of materials designed to clamp between the mating faces of a flange joint. The primary function of gaskets is to seal the irregularities of each face of the flange, preventing leakage of the service fluid from inside the flange to the outside. The gasket must be capable of maintaining a seal during the operating life of the flange, provide resistance to the fluid being sealed, and meet the temperatures and pressure requirements.

Gasket Standards

There are a variety of standards that govern dimensions, tolerances, and fabrication of gaskets. The more common international standards are

ASME B16.20-1997	Metallic Gaskets for Pipe Flanges, Ring-Joint, Spiral Wound and Jacketed
ASME B16.21-1990	Nonmetallic Flat Gaskets for Pipe Flanges
BS 4865 Part 1	Flat Ring Gaskets to Suit BS4504 and DIN Flange
BS 3381	Spiral Wound Gaskets to Suit BS 1560 Flanges
API 6A	Specification for Wellhead and Christmas Tree Equipment

Types of Gaskets

Gaskets can be defined into three main categories: nonmetallic, semimetallic, and metallic types.

Nonmetallic Gaskets. Usually composite sheet materials are used with flat-face flanges and low pressure class applications. Nonmetallic gaskets are manufactured with nonasbestos material or compressed asbestos fiber (CAF). Nonasbestos types include arimid fiber, glass fiber, elastomer, Teflon (PTFE), and flexible graphite gaskets. Full-face gasket types are suitable for use with flat-face (FF) flanges. Flat-ring gasket types are suitable for use with raised faced (RF) flanges.

Gasket dimensions for ASME B16.5 flanges are shown in Table A7.3. Gasket dimensions for ASME B16.47 Series A large diameter steel flanges are shown in Table A7.4a. Gasket dimensions for ASME B16.47 Series B large diameter steel flanges are shown in Table A7.4b.

Semimetallic Gaskets. Semimetallic gaskets are composites of metal and nonmetallic materials. The metal is intended to offer strength and resiliency, while the nonmetallic portion of a gasket provides conformability and sealability. Commonly used semimetallic gaskets are spiral wound, metal jacketed, camprofile, and a variety of metal-reinforced graphite gaskets. Semimetallic gaskets are designed for the widest range of operating conditions of temperature and pressure. Semimetallic gaskets are used on raised face, male-and-female, and tongue-and-groove flanges.

Spiral Wound Gaskets. Spiral wound gaskets are the most common gaskets used on raised face flanges. They are used in all pressure classes from Class 150 to Class 2500. The part of the gasket that creates the seal between the flange faces is the spiral wound section. It is manufactured by winding a preformed metal strip and a soft filler material around a metal mandrel. The inside and outside diameters are reinforced by several additional metal windings with no filler.

TABLE A7.1 Ring Joint Facing and RTJ Gasket Dimensions

a) ASME B16.5 Class 150

Nominal pipe size	½	¾	1	1½	2	3	4	6	8	10	12	14	16	18	20	24
Diameter of raised section I	CLASS 150 FLANGES NOT SPECIFIED IN THESE SIZES		2½	3¼	4	5¼	6¾	8⅝	10¾	13	16	16¾	19	21½	23½	28
Groove pitch diameter J			1⅞	2 9/16	3¼	4½	5⅞	7⅝	9¾	12	15	15⅝	17⅞	20⅜	22	26½
Depth of groove K			¼	¼	¼	¼	¼	¼	¼	¼	¼	¼	¼	¼	¼	¼
Width L			11/32	11/32	11/32	11/32	11/32	11/32	11/32	11/32	11/32	11/32	11/32	11/32	11/32	11/32
Outside diameter M			2 3/16	2⅞	3 9/16	4 13/16	6 3/16	7 15/16	10 1/16	12 5/16	15 5/16	15 15/16	18 3/16	20 11/16	22 5/16	26 13/15
Inside diameter N			1 9/16	2¼	2 15/16	4 3/16	5 9/16	7 5/16	9 7/16	11 11/16	14 11/16	15 5/16	17 9/16	20 1/16	21 11/16	26 1/16
Width O			5/16	5/16	5/16	5/16	5/16	5/16	5/16	5/16	5/16	5/16	5/16	5/16	5/16	5/16
Thickness P			½	½	½	½	½	½	½	½	½	½	½	½	½	½
R number			15	19	22	29	36	43	48	52	56	59	64	68	72	76

Notes:
1. All dimensions in inches.
2. Ring dimensions are per ANSI B16.20.

TABLE A7.1 Ring Joint Facing and RTJ Gasket Dimensions

b) ASME B16.5 Class 300

Nominal pipe size		½	¾	1	1½	2	3	4	6	8	10	12	14	16	18	20	24
Diameter of raised section	I	2	2½	2¾	3⁹⁄₁₆	4¼	5¾	6⅞	9½	11⅞	14	16¼	18	20	22⅝	25	19½
Groove pitch diameter	J	1¹¹⁄₃₂	1¹¹⁄₁₆	2	2¹¹⁄₁₆	3¼	4⅞	5⅞	8⁵⁄₁₆	10⅝	12¾	15	16½	18½	21	23	27¼
Depth of groove	K	⁷⁄₃₂	¼	¼	¼	⁵⁄₁₆	⁵⁄₁₆	⁵⁄₁₆	⁵⁄₁₆	⁵⁄₁₆	⁵⁄₁₆	⁵⁄₁₆	⁵⁄₁₆	⁵⁄₁₆	⁵⁄₁₆	⅜	⁵⁄₁₆
Width	L	⁹⁄₃₂	¹¹⁄₃₂	¹¹⁄₃₂	¹¹⁄₃₂	¹⁵⁄₃₂	¹⁵⁄₃₂	¹⁵⁄₃₂	¹⁵⁄₃₂	¹⁵⁄₃₂	¹⁵⁄₃₂	¹⁵⁄₃₂	¹⁵⁄₃₂	¹⁵⁄₃₂	¹⁵⁄₃₂	¹⁷⁄₃₂	²¹⁄₃₂
Outside diameter	M	1¹⁸⁄₃₂	2	2⁵⁄₁₆	3	3¹¹⁄₁₆	5⁵⁄₁₆	6⁵⁄₁₆	8¾	11¹⁄₁₆	13³⁄₁₆	15⁷⁄₁₆	16¹⁵⁄₁₆	18¹⁵⁄₁₆	21⁷⁄₁₆	23½	27⅞
Inside diameter	N	1³⁄₃₂	1⅜	1¹¹⁄₁₆	2⅜	2¹³⁄₁₆	4⁷⁄₁₆	5⁷⁄₁₆	7⅛	10³⁄₁₆	12⁵⁄₁₆	14⁹⁄₁₆	16¹⁄₁₆	18¹⁄₁₆	20⁹⁄₁₆	22½	26⅝
Width	O	¼	⁵⁄₁₆	⁵⁄₁₆	⁵⁄₁₆	⁷⁄₁₆	⁷⁄₁₆	⁷⁄₁₆	⁷⁄₁₆	⁷⁄₁₆	⁷⁄₁₆	⁷⁄₁₆	⁷⁄₁₆	⁷⁄₁₆	⁷⁄₁₆	½	⅝
Thickness	P	⅜	½	½	½	⅝	⅝	⅝	⅝	⅝	⅝	⅝	⅝	⅝	⅝	¹¹⁄₁₆	¹¹⁄₁₆
R number		11	13	16	20	23	31	37	45	49	53	57	61	65	69	73	77

Notes:
1. All dimensions in inches.
2. Ring dimensions are per ANSI B16.20.

TABLE A7.1 Ring Joint Facing and RTJ Gasket Dimensions

c) ASME B16.5 Class 600

Nominal pipe size		1/2	3/4	1	1 1/2	2	3	4	6	8	19	12	14	16	18	20	24
Diameter of raised section	I	2	2 1/4	2 3/4	3 9/16	4 1/4	5 3/4	6 7/8	9 1/2	11 7/8	14	16 1/4	18	20	22 5/8	25	29 1/2
Groove pitch diameter	J	1 11/32	1 11/16	2	2 11/16	3 1/4	4 7/8	5 7/8	8 5/16	10 5/8	12 3/4	15	16 1/2	18 1/2	21	23	27 1/4
Depth of groove	K	7/32	1/4	1/4	1/4	5/16	5/16	5/16	5/16	5/16	5/16	5/16	5/16	5/17	5/16	3/8	5/16
Width	L	9/32	11/32	11/32	11/32	15/32	15/32	15/32	15/32	15/32	15/32	15/32	15/32	15/32	15/32	17/32	21/32
Outside diameter	M	1 19/32	2 5/16	3	3 11/16	5 5/16	6 5/16	8 3/4	11 1/16	13 3/16	15 7/16	16 13/16	18 15/16	21 7/16	23 1/2	27 7/8	
Inside diameter	N	1 3/32	1 3/8	1 11/16	2 3/8	2 13/16	4 7/16	5 7/16	7 1/8	10 3/16	12 5/16	14 9/16	16 1/16	18 1/16	20 9/16	22 1/2	26 5/8
Width	O	1/4	5/16	5/16	5/16	7/16	7/16	7/16	7/16	7/16	7/16	7/16	7/16	7/16	7/16	1/2	5/8
Thickness	P	3/8	1/2	1/2	1/2	5/8	5/8	5/8	5/8	5/8	5/8	5/8	5/8	5/8	5/8	11/16	11/16
R number		11	13	16	20	23	31	37	45	49	53	57	61	65	69	73	77

Notes:
1. All dimensions in inches.
2. Ring dimensions are per ANSI B16.20.

TABLE A7.1 Ring Joint Facing and RTJ Gasket Dimensions

d) ASME B16.5 Class 900

Nominal pipe size		½	¾	1	1½	2	3	4	6	8	10	12	14	16	18	20	24
Diameter of raised section	I	USE CLASS 1500 DIMENSIONS IN THESE SIZES					6⅛	7⅛	9½	12⅛	14¼	16½	18⅜	20⅝	23⅜	25½	30⅜
Groove pitch diameter	J						4⅞	5⅞	8 5/16	10⅝	12¾	15	16½	18½	21	23	27¼
Depth of groove	K						5/16	5/16	5/16	5/16	5/16	5/16	7/16	7/16	½	½	⅝
Width	L						15/32	15/32	15/32	15/32	15/32	15/32	21/32	21/32	25/32	25/32	1 1/16
Outside diameter	M						5 5/16	6 5/16	8¾	11 1/16	13 3/16	15 7/16	17⅛	19⅛	21¾	23¾	28¼
Inside diameter	N						4 7/16	5 7/16	7⅞	10 3/16	12 5/16	14 9/16	15⅞	17⅞	20⅛	22¼	26¼
Width	O						7/16	7/16	7/16	7/16	7/16	7/16	⅝	⅝	¾	¾	1
Thickness	P						⅝	⅝	⅝	⅝	⅝	⅝	13/16	13/16	15/16	15/16	1¼
R number							31	37	45	49	53	57	62	66	70	74	78

Notes:
1. All dimensions in inches.
2. Ring dimensions are per ANSI B16.20.

TABLE A7.1 Ring Joint Facing and RTJ Gasket Dimensions

e) ASME B16.5 Class 1500

Nominal pipe size	½	¾	1	1½	2	3	4	6	8	10	12	14	16	18	20	24
Diameter of raised section I	2⅜	2⅝	2 13⁄16	3⅝	4⅞	6⅜	7⅝	9¾	12½	14⅜	17¼	19¼	21½	24⅛	26½	31¼
Groove pitch diameter J	1 9⁄16	1¾	2	2 11⁄16	3¾	5⅜	6⅜	8 5⁄16	10⅝	12¾	15	16½	18½	21	23	27¼
Depth of groove K	¼	¼	¼	¼	5⁄16	5⁄16	5⁄16	⅜	5⁄16	7⁄16	9⁄16	⅝	11⁄16	11⁄16	11⁄16	13⁄16
Width L	11⁄32	11⁄32	11⁄32	11⁄32	15⁄32	15⁄32	15⁄32	17⁄32	21⁄32	21⁄32	29⁄32	1 1⁄16	1 3⁄16	1 3⁄16	1 5⁄16	1 7⁄16
Outside diameter M	1⅞	2 1⁄16	2 5⁄16	3	4 3⁄16	5 13⁄16	6 13⁄16	8 13⁄16	11¼	13⅜	15⅞	17½	19⅝	22⅛	24¼	28⅝
Inside diameter N	1¼	1 7⁄16	1 11⁄16	2⅜	3 5⁄16	4 15⁄16	5 15⁄16	7 14⁄16	10	12⅛	14⅛	15½	17⅜	19⅞	21¾	25⅞
Width O	5⁄16	5⁄16	5⁄16	5⁄16	7⁄16	7⁄16	7⁄16	½	⅝	⅝	⅞	1	1⅛	1⅛	1¼	1⅜
Thickness P	½	½	½	½	⅝	⅝	⅝	11⁄16	13⁄16	13⁄16	11⁄16	1¼	1⅜	1⅜	1½	1⅝
R number	12	14	16	20	24	35	39	46	50	54	58	63	67	71	75	79

Notes:
1. All dimensions in inches.
2. Ring dimensions are per ANSI B16.20.

TABLE A7.1 Ring Joint Facing and RTJ Gasket Dimensions

f) ASME B16.5 Class 2500

Nominal pipe size	½	¾	1	1½	2	3	4	6	8	10	12	14	16	18	20	24
Diameter of raised section I	2 9/16	2⅞	3¼	4½	5¼	6⅜	8	11	13⅜	16¾	19½					
Groove pitch diameter J	1 11/16	2	2⅜	3¼	4	5	6 3/16	9	11	13½	16					
Depth of groove K	¼	¼	¼	5/16	5/16	⅜	7/16	½	9/16	11/16	11/16					
Width L	11/32	11/32	11/32	15/32	15/32	17/32	21/32	25/32	29/32	1 3/16	1 5/16					
Outside diameter M	2	2 5/16	2 11/16	3 11/16	4 7/16	5½	6 13/16	9¾	11⅞	14⅝	17¼					
Inside diameter N	1⅜	1 11/16	2 1/16	2 13/16	3 9/16	4½	5 9/16	8¼	10⅛	12⅜	14¾					
Width O	5/16	5/16	5/16	7/16	7/16	½	⅝	¾	⅞	1⅛	1¼					
Thickness P	½	½	½	⅝	⅝	11/16	13/16	13/16	1 1/16	1⅜	1½					
R number	13	16	18	23	26	32	38	47	51	55 60						

Notes:
1. All dimensions in inches.
2. Ring dimensions are per ANSI B16.20.

TABLE A7.2 Basic Flange Dimensions

a) ASME B16.5 Class 150

Nominal pipe size	½	¾	1	1½	2	3	4	6	8	10	12	14	16	18	20	24
Outside diameter	27⁄32	1 3⁄64	1 5⁄16	1 29⁄32	2⅜	3½	4½	6⅝	8⅝	10¾	12¾	14	16	18	20	24
Thickness A1	7⁄16	½	9⁄16	11⁄16	¾	15⁄16	15⁄16	1	1⅛	1 3⁄16	1¼	1⅜	1 7⁄16	1 9⁄16	1 11⁄16	1⅞
Outside diameter B	3½	3⅞	4¼	5	6	7½	9	11	13½	16	19	21	23½	25	27½	32
Hub diameter C	1 3⁄16	1½	1 15⁄16	2 9⁄16	3 1⁄16	4¼	5 5⁄16	7 9⁄16	9 11⁄16	12	14⅜	15¾	18	19⅞	22	26⅛
Slip on	⅝	⅝	11⁄16	⅞	1	1 3⁄16	1 5⁄16	1 9⁄16	1¾	1 15⁄16	2 3⁄16	2¼	2½	2 11⁄16	2⅞	3¼
Lapped	⅝	⅝	11⁄16	⅞	1	1 3⁄16	1 5⁄16	1 9⁄16	1¾	1 15⁄16	2 3⁄16	3⅛	3 7⁄16	3 13⁄16	4 1⁄16	4⅜
Weld neck	1⅞	2 1⁄16	2 3⁄16	2 7⁄16	2½	2¾	3	3½	4	4	4½	5	5	5½	5 11⁄16	6

TABLE A7.2 Basic Flange Dimensions

b) ASME B16.5 Class 300

Nominal pipe size	½	¾	1	1½	2	3	4	6	8	10	12	14	16	18	20	24
Outside diameter	27⁄32	1³⁄64	1⁵⁄16	1²⁹⁄32	2⅜	3½	4½	6⅝	8⅝	10¾	12¾	14	16	18	20	24
Thickness A1	9⁄16	⅝	11⁄16	13⁄16	⅞	1⅛	1¼	1⁷⁄16	1⅝	1⅞	2	2⅛	2¼	2⅜	2½	2¾
Outside diameter B	3¾	4⅝	4⅞	6⅛	6½	8¼	10	12½	15	17½	20½	23	25½	28	30½	36
Hub diameter C	1½	1⅞	2⅛	2¾	3⁵⁄16	4⅝	5¾	8⅛	10¼	12⅝	14¾	16¾	19	21	23⅛	27⅝
Slip on	⅞	1	1¹⁄16	1³⁄16	1⁵⁄16	1¹¹⁄16	1⅞	2¹⁄16	2⁷⁄16	2⅝	2⅞	3	3¼	3½	3¾	4³⁄16
Lapped	⅞	1	1¹⁄16	1³⁄16	1⁵⁄16	1¹¹⁄16	1⅞	2¹⁄16	2⁷⁄16	3¾	4	4⅜	4¾	5⅛	5½	6
Weld neck	2¹⁄16	2¼	2⁷⁄16	2¹¹⁄16	2¾	3⅛	3⅜	3⅞	4⅜	4⅝	5⅛	5⅝	5¾	6¼	6⅜	6⅝

TABLE A7.2 Basic Flange Dimensions

c) ASME B16.5 Class 600

Nominal pipe size	½	¾	1	1½	2	3	4	6	8	10	12	14	16	18	20	24
Outside diameter	27⁄32	1 3⁄64	1 5⁄16	1 29⁄32	2⅜	3½	4½	6⅝	8⅝	10¾	12¾	14	16	18	20	24
Thickness A2	9⁄16	⅝	11⁄16	⅞	1	1¼	1½	1⅞	2 3⁄16	2½	2⅝	2¾	3	3¼	3½	4
Outside diameter B	3¾	4⅝	4⅞	6⅛	6½	8¼	10¾	14	16½	20	22	23¾	27	29¼	32	37
Hub diameter C	1½	1⅞	2⅛	2¾	3 5⁄16	4⅝	6	8¾	10¾	13½	15¾	17	19½	21½	24	28¼
Slip on	⅞	1	1 1⁄16	1¼	1 1⁄16	1 13⁄16	2⅛	2⅝	3	3⅜	3⅝	3 11⁄16	4 3⁄16	4⅝	5	5½
Lapped	⅞	1	1 1⁄16	1¼	1 67⁄16	1 13⁄16	2⅛	2⅝	3	4⅜	4⅝	5	5½	6	6½	7¼
Weld neck	2 1⁄16	2¼	2 7⁄16	2¾	2⅞	3¼	4	4⅝	5¼	6	6⅛	6½	7	7¼	7½	8

TABLE A7.2 Basic Flange Dimensions

d) ASME B16.5 Class 900

			½	¾	1	1½	2	3	4	6	8	10	12	14	16	18	20	24
Pipe	Nominal pipe size		½	¾	1	1½	2	3	4	6	8	10	12	14	16	18	20	24
	Outside diameter		27/32	1 3/64	1 4/16	1 29/32	2⅜	3½	4½	6⅝	8⅝	10¾	12¾	14	16	18	20	24
Flange	Thickness A2		Use Class 1500 dimensions in these sizes					1½	1¾	2 3/16	2½	2¾	3⅛	3⅜	3½	5	4¼	5½
	Outside diameter B							9½	11½	15	18½	21½	24	25¼	27¾	31	33¾	41
	Hub diameter C							5	6¼	9¼	11¾	14½	16½	17¾	20	22¼	24½	29½
	Length through hub D2	Slip on						2⅛	2¾	3⅜	4	4½	4⅝	5⅛	5¼	6	6¼	8
		Lapped						2⅛	2¾	3⅜	4½	5	5⅝	6⅛	6½	7½	8¼	10½
		Weld neck						4	4½	5½	6⅜	7¼	7⅞	8⅜	8½	9	9¾	11½

TABLE A7.2 Basic Flange Dimensions

e) ASME B16.5 Class 1500

Nominal pipe size	½	¾	1	1½	1	3	4	6	8	10	12	14	16	18	20	24
Outside diameter	27⁄32	13⁄64	15⁄16	129⁄32	2⅜	3½	4½	6⅝	8⅝	10¾	12¾	14	16	18	20	24
Thickness A2	⅞	1	1⅛	1¼	1½	1⅞	2⅛	3¼	3⅝	4¼	4⅞	5¼	5¾	6⅜	7	8
Outside diameter B	4¾	5⅛	5⅞	7	8⁄12	10½	12¼	15½	19	23	26½	29½	32½	36	38¾	46
Hub diameter C	1½	1¾	2 1⁄16	2¾	4⅛	5¼	6⅜	9	11½	14½	17¾	19½	21¾	23½	25¼	30
Slip on	1¼	1⅜	1⅝	1¾	2¼	NOT SPECIFIED FOR CLASS 1500										
Lapped	1¼	1⅜	1⅝	1¾	2¼	2⅞	3 9⁄16	4 11⁄16	5⅝	7	8⅝	9½	10¼	10⅞	11½	13
Weld neck	2⅜	2¾	2⅞	3¼	.4	4⅝	4⅞	6¾	8⅜	10	11⅛	11¾	12¼	12⅞	14	16

TABLE A7.2 Basic Flange Dimensions

f) ASME B16.5 Class 2500

Nominal pipe size	½	¾	1	1½	2	3	4	6	8	10	12	14	16	18	20	24
Outside diameter	27⁄32	1 3⁄64	1 5⁄16	1 29⁄32	2⅜	3½	4½	6⅝	8⅝	10¾	12¾	Class 2500 flanges not specified in these sizes				
Thickness A2	1 3⁄16	1¼	1⅜	1¾	2	2⅝	3	4¼	5	6½	7¼					
Outside diameter B	5¼	5½	6¼	8	9¼	12	14	19	21¾	26½	30					
Hub diameter C	1 11⁄16	2	2¼	3⅛	3¾	5¼	6½	9¼	12	14¾	17⅜					
Slip on	NOT SPECIFIED FOR CLASS 2500															
Lapper	1 9⁄16	1 11⁄16	1⅞	2⅜	2¾	3⅝	4¼	6	7	9	10					
Weld neck	2⅞	3⅛	3½	4⅜	5	6⅝	7½	10¾	12½	16½	18¼					

TABLE A7.3 Gasket Dimensions for ASME B16.5 Pipe Flanges and Flange Fittings

a) Class 150

		Class 150 gaskets				Class 300 gaskets			
Nominal pipe size	Gasket ID	OD	Number of holes	Hole diameter	Bolt circle diameter	OD	Number of holes	Hole diameter	Bolt circle diameter
½	0.84	3.50	4	0.62	2.38	3.75	4	0.62	2.62
¾	1.06	3.88	4	0.62	2.75	4.62	4	0.75	3.25
1	1.31	4.25	4	0.62	3.12	4.88	4	0.75	3.50
1¼	1.66	4.62	4	0.62	3.50	5.25	4	0.75	3.88
1½	1.91	5.00	4	0.62	3.88	6.12	4	0.88	4.50
2	2.38	6.00	4	0.75	4.75	6.50	8	0.75	5.00
2½	2.88	7.00	4	0.75	5.50	7.50	8	0.88	5.88
3	3.50	7.50	4	0.75	6.00	8.25	8	0.88	6.62
3½	4.00	8.50	8	0.75	7.00	9.00	8	0.88	7.25
4	4.50	9.00	8	0.75	7.50	10.00	8	0.88	7.88
5	5.56	10.00	8	0.88	8.50	11.00	8	0.88	9.25
6	6.62	11.00	8	0.88	9.50	12.50	12	0.88	10.63
8	8.62	13.50	8	0.88	11.75	15.00	12	1.00	13.00
10	10.75	16.00	12	1.00	14.25	. . .	. . .	. . .	. . .
12	12.75	19.00	12	1.00	17.00	. . .	. . .	. . .	. . .

General note: Dimensions are in inches.

TABLE A7.3 Gasket Dimensions for ASME B16.5 Pipe Flanges and Flange Fittings
b) Class 300, 400, 600 and 900

Nomimal pipe size	Gasket ID	Gasket OD			
		Glass 300	Class 400	Class 600	Class 900
½	0.84	2.12	2.12	2.12	2.50
¾	1.06	2.62	2.62	2.62	2.75
1	1.31	2.88	2.88	2.88	3.12
1¼	1.66	3.25	3.25	3.25	3.50
1½	1.91	3.75	3.75	3.75	3.88
2	2.38	4.38	4.38	4.38	5.62
2½	2.88	5.12	5.12	5.12	6.50
3	3.50	5.88	5.88	5.88	6.62
3½	4.00	6.50	6.38	6.38	. . .
4	4.50	7.12	7.00	7.62	8.12
5	5.56	8.50	8.38	9.50	9.75
6	6.62	9.88	9.75	10.50	11.38
8	8.62	12.12	12.00	12.62	14.12
10	10.75	14.25	14.12	15.75	17.12
12	12.75	16.62	16.50	18.00	19.62
14	14.00	19.12	19.00	19.38	20.50
16	16.00	21.25	21.12	22.25	22.62
18	18.00	23.50	23.38	24.12	25.12
20	20.00	25.75	25.50	26.88	27.50
24	24.00	30.50	30.25	31.12	33.00

General note: Dimensions are in inches.

For applications involving raised face flanges, the spiral wound gasket is supplied with an outer ring; for critical applications it is supplied with both outer and inner rings. The outer ring provides the centering capability of the gasket as well as the blow-out resistance of the windings and acts as a compression stop. The inner ring provides additional load-bearing capability from high-bolt loading. This is particularly advantageous in high-pressure applications. The inner ring also acts as a barrier to the internal fluids and provides resistance against buckling of the windings.

Spiral wound–ring gaskets are also used in tongue-and-groove flanges. Inner rings should be used with spiral wound gaskets on male-and-female flanges, such as those found in heat-exchanger, shell, channel, and cover-flange joints.

Spiral wound gaskets are designed to suit ASME B16.5 and DIN flanges. See Table A7.5 for dimensions for spiral wound gaskets used with ASME B16.5 flanges.

See Table A7.6a and A7.6b for dimensions for spiral wound gaskets used with ASME B16.47 large diameter steel flanges.

See Table A7.7 for inner-ring inner diameters for spiral wound gaskets.

Camprofile Gaskets. Camprofile gaskets are made from a solid serrated metal core faced on each side with a soft nonmetallic material.

The term camprofile (or kammprofile) comes from the groove profile found on each face of the metal core. Two profiles are commonly used: the DIN 2697 profile and the shallow profile. The shallow profile is similar to the DIN 2697 profile except

TABLE A7.4a Flat Ring Gasket Dimensions for ASME B16.47 Series A (MSSSP44) Large Diameter Steel Flanges, Classes 150, 300, 400 and 600

Nominal pipe size	ID	OD			
		Class 150	Class 300	Class 400	Class 600
22	22.00	26.00	27.75	27.63	28.88
26	26.00	30.50	32.88	32.75	34.12
28	28.00	32.75	35.38	35.12	36.00
30	30.00	34.75	37.50	37.25	38.25
32	32.00	37.00	39.62	39.50	40.25
34	34.00	39.00	41.62	41.50	42.25
36	36.00	41.25	44.00	44.00	44.50
38	38.00	43.75	41.50	42.26	43.50
40	40.00	45.75	43.88	44.58	45.50
42	42.00	48.00	45.88	46.38	48.00
44	44.00	50.25	48.00	48.50	50.00
46	46.00	52.25	50.12	50.75	52.26
48	48.00	54.50	52.12	53.00	54.75
50	50.00	56.50	54.25	55.25	57.00
52	52.00	58.75	56.25	57.26	59.00
54	54.00	61.00	58.75	59.75	61.25
56	56.00	63.25	60.75	61.75	63.50
58	58.00	65.50	62.75	63.75	65.50
60	60.00	67.50	64.75	66.25	67.75

General note: Dimensions are in inches.

TABLE A7.4b Flat Ring Gasket Dimensions for ASME B16.47 Series B (API 605) Large Diameter Steel Flanges, Classes 75, 150, 300, 400 and 600

Nominal pipe size	Gasket ID	Gasket OD				
		Class 75	Class 150	Class 300	Class 400	Class 600
26	26.00	27.88	28.56	30.38	29.38	30.12
28	28.00	29.88	30.56	32.50	31.50	32.25
30	30.00	31.88	32.56	34.88	33.75	34.62
32	32.00	33.88	34.69	37.00	35.88	36.75
34	34.00	35.88	36.81	39.12	37.88	39.25
36	36.00	38.31	38.88	41.25	40.25	41.25
38	38.00	40.31	41.12	43.25	. . .	. . .
40	40.00	42.31	43.12	45.25	. . .	. . .
42	42.00	44.31	45.12	47.25	. . .	. . .
44	44.00	46.50	47.12	49.25	. . .	. . .
46	46.00	48.50	49.44	51.88	. . .	. . .
48	48.00	50.50	51.44	53.88	. . .	. . .
50	50.00	52.50	53.44	55.88	. . .	. . .
52	52.00	54.62	55.44	57.88	. . .	. . .
54	54.00	56.62	57.62	61.25	. . .	. . .
56	56.00	58.88	59.62	62.75	. . .	. . .
58	58.00	60.88	62.19	65.19	. . .	. . .
60	60.00	62.88	64.19	67.12	. . .	. . .

TABLE A7.5 Dimensions for Spiral Wound Gaskets Used with ASME B16.5 Flanges

Flange size (NPS)	Outside diameter of gaskets		Inside diameter of gasket by class							Outside diameter of centering ring by class						
	Classes 150, 300, 400, 600	Classes 900, 1500, 2500	150	300	400	600	900	1500	2500	150	300	400	600	900	1500	2500
½	1.25	1.25	0.75	0.75	(5)	0.75	(5)	0.75	0.75	1.88	2.13	(5)	2.13	(5)	2.50	2.75
¾	1.56	1.56	1.00	1.00	(5)	1.00	(5)	1.00	1.00	2.25	2.63	(5)	2.63	(5)	2.75	3.00
1	1.88	1.88	1.25	1.25	(5)	1.25	(5)	1.25	1.25	2.63	2.88	(5)	2.88	(5)	3.13	3.38
1¼	2.38	2.38	1.88	1.88	(5)	1.88	(5)	1.56	1.56	3.00	3.25	(5)	3.25	(5)	3.50	4.13
1½	2.75	2.75	2.13	2.13	(5)	2.13	(5)	1.88	1.88	3.38	3.75	(5)	3.75	(5)	3.88	4.63
2	3.38	3.38	2.75	2.75	(5)	2.75	(5)	2.31	2.31	4.13	4.38	(5)	4.38	(5)	5.63	5.75
2½	3.88	3.88	3.25	3.25	(5)	3.25	(5)	2.75	2.75	4.88	5.13	(5)	5.13	(5)	6.50	6.63
3	4.75	4.75	4.00	4.00	(5)	4.00	3.75	3.63	3.63	5.38	5.88	(5)	5.88	6.63	6.88	7.75
4	5.88	5.88	5.00	5.00	4.75	4.75	4.75	4.63	4.63	6.88	7.13	7.00	7.63	8.13	8.25	9.25
5	7.00	7.00	6.13	6.13	5.81	5.81	5.81	5.63	5.63	7.75	8.50	8.38	9.50	9.75	10.00	11.00
6	8.25	8.25	7.19	7.19	6.88	6.88	6.88	6.75	6.75	8.75	9.88	9.75	10.50	11.38	11.13	12.50
8	10.38	10.13	9.19	9.19	8.88	8.88	8.75	8.50	8.50	11.00	12.13	12.00	12.63	14.13	13.88	15.25
10	12.50	12.25	11.31	11.31	10.81	10.81	10.88	10.50	10.63	13.38	14.25	14.13	15.75	17.13	17.13	18.75
12	14.75	14.50	13.38	13.38	12.88	12.88	12.75	12.75	12.50	16.13	16.63	16.50	18.00	19.63	20.50	21.63
14	16.00	15.75	14.63	14.63	14.25	14.25	14.00	14.25	(5)	17.75	19.13	19.00	19.38	20.50	22.75	
16	18.25	18.00	16.63	16.63	16.25	16.25	16.25	16.00	(5)	20.25	21.25	21.13	22.25	22.63	25.25	
18	20.75	20.50	18.69	18.69	18.50	18.50	18.25	18.25	(5)	21.63	23.50	23.38	24.13	25.13	27.75	
20	22.75	22.50	20.69	20.69	20.50	20.50	20.50	20.25	(5)	23.88	25.75	25.50	26.88	27.50	29.75	
24	27.00	26.75	24.75	24.75	24.75	24.75	24.75	24.25	(5)	28.25	30.50	30.25	31.13	33.00	35.50	

TABLE A7.6a Dimensions for Spiral Wound Gaskets Used with ASME B16.47 Series A (MSS SP44) Flanges

Flange size (NPS)	Class 150			Class 300			Class 400			Class 600			Class 900		
	Gasket		Centering ring outside diameter	Gasket		Centering ring outside diameter	Gasket		Centering ring outside diameter	Gasket		Centering ring outside diameter	Gasket		Centering ring outside diameter
	Inside diameter	Outside diameter		Inside diameter	Outside diameter		Inside diameter	Outside diameter		Inside diameter	Outside diameter		Inside diameter	Outside diameter	
26	26.50	27.75	30.50	27.00	29.00	32.88	27.00	29.00	32.75	27.00	29.00	34.13	27.00	29.00	34.75
28	28.50	29.75	32.75	29.00	31.00	35.38	29.00	31.00	35.13	29.00	31.00	36.00	29.00	31.00	37.25
30	30.50	31.75	34.75	31.25	33.25	37.50	31.25	33.25	37.25	31.25	33.25	38.25	31.25	33.25	39.75
32	32.50	33.88	37.00	33.50	35.50	39.63	33.50	35.50	39.50	33.50	35.50	40.25	33.50	35.50	42.25
34	34.50	35.88	39.00	35.50	37.50	41.63	35.50	37.50	41.50	35.50	37.50	42.25	35.50	37.50	44.75
36	36.50	38.13	41.25	37.63	39.63	44.00	37.63	39.63	44.00	37.63	39.63	44.50	37.75	39.75	47.25
38	38.50	40.13	43.75	38.50	40.00	41.50	38.25	40.25	42.25	39.00	41.00	43.50	40.75	42.75	47.25
40	40.50	42.13	45.75	40.25	42.13	43.88	40.38	42.38	44.38	41.25	43.25	45.50	43.25	45.25	49.25
42	42.50	44.25	48.00	42.25	44.13	45.88	42.38	44.38	46.38	43.50	45.50	48.00	45.25	47.25	51.25
44	44.50	46.38	50.25	44.50	46.50	48.00	44.50	46.50	48.50	45.75	47.75	50.00	47.50	49.50	53.88
46	46.50	48.38	52.25	46.38	48.38	50.13	47.00	49.00	50.75	47.75	49.75	52.25	50.00	52.00	56.50
48	48.50	50.38	54.50	48.63	50.63	52.13	49.00	51.00	53.00	50.00	52.00	54.75	52.00	54.00	58.50
50	50.50	52.50	56.50	51.00	53.00	54.25	51.00	53.00	55.25	52.00	54.00	57.00			
52	52.50	54.50	58.75	53.00	55.00	56.25	53.00	55.00	57.25	54.00	56.00	59.00			
54	54.50	56.50	61.00	55.25	57.25	58.75	55.25	57.25	59.75	56.25	58.25	61.25			
56	56.50	58.50	63.25	57.25	59.25	60.75	57.25	59.25	61.75	58.25	60.25	63.50			
58	58.50	60.50	65.50	59.50	61.50	62.75	59.25	61.25	63.75	60.50	62.50	65.50			
60	60.50	62.50	67.50	61.50	63.50	64.75	61.75	63.75	66.25	62.75	64.75	68.25			

TABLE A7.6b Dimensions for Spiral Wound Gaskets Used with ASME B16.47 Series B (API 605) Flanges

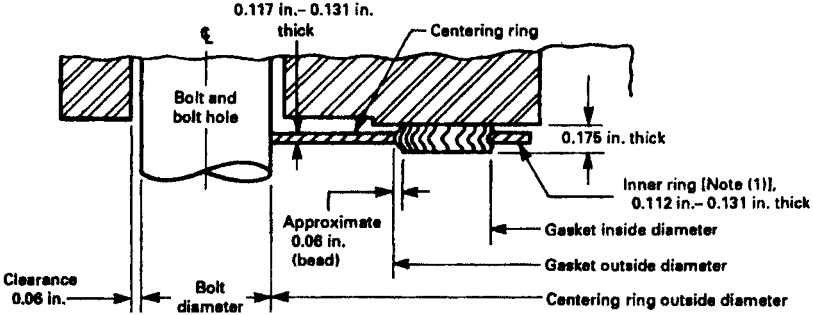
0.117 in.– 0.131 in. thick
℄
Centering ring
Bolt and bolt hole
0.175 in. thick
Inner ring [Note (1)], 0.112 in.– 0.131 in. thick
Approximate 0.06 in. (bead)
Gasket inside diameter
Gasket outside diameter
Clearance 0.06 in.
Bolt diameter
Centering ring outside diameter

Flange size (NPS)	Class 150			Class 300			Class 400			Class 500			Class 900		
	Gasket		Centering ring outside diameter	Gasket		Centering ring outside diameter	Gasket		Centering ring outside diameter	Gasket		Centering ring outside diameter	Gasket		Centering ring outside diameter
	Inside diameter	Outside diameter		Inside diameter	Outside diameter		Inside diameter	Outside diameter		Inside diameter	Outside diameter		Inside diameter	Outside diameter	
26	26.50	27.50	28.56	26.50	28.00	30.38	26.25	27.50	29.38	26.13	28.13	30.13	27.25	29.50	33.00
28	28.50	29.50	30.56	28.50	30.00	32.50	28.13	29.50	31.50	27.75	29.75	32.25	29.25	31.50	35.50
30	30.50	31.50	32.56	30.50	32.00	34.88	30.13	31.75	33.75	30.63	32.63	34.63	31.75	33.75	37.75
32	32.50	33.50	34.69	32.50	34.00	37.00	32.00	33.88	35.88	32.75	34.75	36.75	34.00	36.00	40.00
34	34.50	35.75	36.81	34.50	36.00	39.13	34.13	35.88	37.88	35.00	37.00	39.25	36.25	38.25	42.25
36	36.50	37.75	38.88	36.50	38.00	41.25	36.13	38.00	40.25	37.00	39.00	41.25	37.25	39.25	44.25
38	38.37	39.75	41.13	39.75	41.25	43.25	38.25	40.25	42.25	39.00	41.00	43.50	40.75	42.75	47.25
40	40.25	41.88	43.13	41.75	43.25	45.25	40.38	42.38	44.38	41.25	43.25	45.50	43.25	45.25	49.25
42	42.50	43.88	45.13	43.75	45.25	47.25	42.38	44.38	46.38	43.50	45.50	48.00	45.25	47.25	51.25
44	44.25	45.88	47.13	45.75	47.25	49.25	44.50	46.50	48.50	45.75	47.75	50.00	47.50	49.50	53.88
46	46.50	48.19	49.44	47.88	49.38	51.88	47.00	49.00	50.75	47.75	49.75	52.25	50.00	52.00	56.50
48	48.50	50.00	51.44	49.75	51.63	53.88	49.00	51.00	53.00	50.00	52.00	54.75	52.00	54.00	58.50
50	50.50	52.19	53.44	51.88	53.38	55.88	51.00	53.00	55.25	52.00	54.00	57.00			
52	52.50	54.19	55.44	53.88	55.38	57.88	53.00	55.00	57.25	54.00	56.00	59.00			
54	54.50	56.00	57.63	55.25	57.25	60.25	55.25	57.25	59.75	56.25	58.25	61.25			
56	56.88	58.18	59.63	58.25	60.00	62.75	57.25	59.25	61.75	58.25	60.25	63.50			
58	59.07	60.19	62.19	60.44	61.94	65.19	59.25	61.25	63.75	60.50	62.50	65.50			
60	61.31	62.44	64.19	62.56	64.19	67.19	61.75	63.75	66.25	62.75	64.75	68.25			

TABLE A7.7 Inner Ring Inside Dimensions for Spiral Wound Gaskets

Flange size (NPS)	Pressure class						
	150	300	400	600	900	1500	2500
½	0.56	0.56		0.56		0.56	0.56
¾	0.81	0.81		0.81		0.81	0.81
1	1.06	1.06		1.06		1.06	1.06
1¼	1.50	1.50		1.50		1.31	1.31
1½	1.75	1.75		1.75		1.63	1.63
2	2.19	2.19		2.19		2.06	2.06
2½	2.62	2.62		2.62		2.50	2.50
3	3.19	3.19		3.19	3.19	3.19	3.19
4	4.19	4.19	4.19	4.19	4.19	4.19	4.19
5	5.19	5.19	5.19	5.19	5.19	5.19	5.19
6	6.19	6.19	6.19	6.19	6.19	6.19	6.19
8	8.50	8.50	8.25	8.25	8.25	8.12	7.88
10	10.56	10.56	10.25	10.25	10.25	10.15	9.75
12	12.50	12.50	12.50	12.50	12.38	12.38	11.50
14	13.75	13.75	13.75	13.75	13.50	13.38	
16	15.75	15.75	15.75	15.75	15.50	15.25	
18	17.69	17.69	17.69	17.69	17.50	17.25	
20	19.69	19.69	19.69	19.69	19.50	19.25	
24	23.75	23.75	23.75	23.75	23.75	22.75	

that the groove depth is 0.5 mm (versus 0.75 mm for DIN 2697). This allows for a cost advantage for the shallow profile. The profile can be made from sheet metal or strip with a thickness of 3 mm instead of a thickness of 4 mm for DIN profile. For the original German Standard see Fig. A7.4, DIN 2697, Profile for Camprofile Gasket.

The most common facing for camprofile gaskets is flexible graphite. Other facings such as expanded or sintered PTFE and CAF are also used. The camprofile gasket combines the strength, blowout, and creep resistance of a metal core with a soft sealing material that conforms to the flange faces providing a seal. Standard camprofile gaskets are available to suit ASME B16.5, BS1560, and DIN 2697. These dimensions are shown in Table A7.8, Camprofile Dimensions to Suit Standard Flanges.

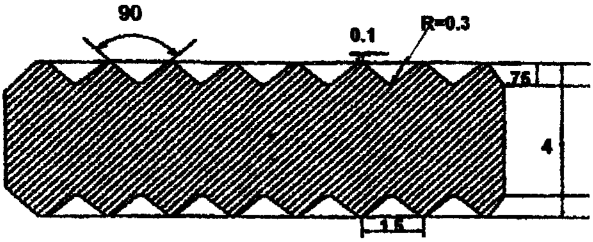

FIGURE A7.4 DIN 2697 Profile for camprofile gasket.

TABLE A7.8 Camprofile Dimensions to Suit Standard Flanges

a) Suit ASME B16.5 and BS 1560 Flanges Class 150 to 2500

Style PN, ZG & ZA to suit ASME B16.5 and BS 1560 flanges class 150 up to 2500									
Dimensions in inches			150	300	400	600	900	1500	2500
NPS	d1	d2	d3						
½	29/32	1 5/16	1⅞	2⅛	2⅛	2⅛	2½	2½	2¾
¾	1⅛	1 9/16	2¼	2⅝	2⅝	2⅝	2¾	2¾	3
1	1 7/16	1⅞	2⅝	2⅞	2⅞	2⅞	3⅛	3⅛	3⅜
1¼	1¾	2⅜	3	3¼	3¼	3¼	3½	3½	4⅛
1½	2 1/16	2¾	3⅜	3¾	3¾	3¾	3⅞	3⅞	4⅝
2	2¾	3½	4⅛	4⅜	4⅜	4⅜	5⅝	5⅝	5¾
2½	3¼	4	4⅞	5⅛	5⅛	5⅛	6½	6½	6⅝
3	3⅞	4⅞	5⅜	5⅞	5⅞	5⅞	6⅝	6⅞	7¾
3½	4⅜	5⅜	6⅜	6½	6⅜	6⅜	7½	7⅜	—
4	4⅞	6 1/16	6⅞	7⅛	7	7⅝	8⅛	8¼	9¼
5	5 15/16	7 3/16	7¾	8½	8⅜	9½	9¾	10	11
6	7	8⅜	8¾	9⅞	9¾	10½	11⅜	11⅛	12½
8	9	10½	11	12⅛	12	12⅝	14⅛	13⅞	15¼
10	11⅛	12⅝	13⅜	14¼	14⅛	15¾	17⅛	17⅛	18¾
12	13⅜	14⅞	16⅛	16⅝	16½	18	19⅝	20½	21⅝
14	14⅝	16⅛	17¾	19⅛	19	19⅜	20½	22¾	—
16	16⅝	18⅜	20¼	21¼	21⅛	22¼	22⅝	25¼	—
18	18⅞	20⅞	21⅝	23½	23⅜	24⅛	25⅛	27¾	—
20	20⅞	22⅞	23⅞	25¾	25½	26⅞	27½	29¾	—
22	22⅞	24⅞	26	27¾	27⅝	28⅞	—	—	—
24	24⅞	26⅞	28¼	30½	30¼	31⅛	33	35½	—

TABLE A7.8 Camprofile Dimensions to Suit Standard Flanges

b) Suit DIN 2697 PN 64 to PN 400

Style PN, ZG & ZA in accordance with DIN 2697, PN64 to PN400								
Dimensions in mm			64	100	160	250	320	400
DN	d1	d2	d3					
10	22	40	56	56	56	67	67	67
15	25	45	61	61	61	72	72	77
25	36	68	82	82	82	82	92	103
40	50	88	102	102	102	108	118	135
50	62	102	112	118	118	123	133	150
65	74	122	137	143	143	153	170	192
80	90	138	147	153	153	170	190	207
100	115	162	173	180	180	202	229	256
125	142	188	210	217	217	242	274	301
150	165	218	247	257	257	284	311	348
(175)	190	260	277	287	284	316	358	—
200	214	285	309	324	324	358	398	442
250	264	345	364	391	388	442	488	—
300	310	410	424	458	458	—	—	—
350	340	465	486	512	—	—	—	—
400	386	535	543	—	—	—	—	—

Camprofile gaskets are used on all pressure classes from Class 150 to Class 2500 in a wide variety of service fluids and operating temperatures.

Jacketed Gaskets. Jacketed gaskets are made from a nonmetallic gasket material enveloped in a metallic sheath. This inexpensive gasket arrangement is used occasionally on standard flange assemblies, valves, and pumps. Jacketed gaskets are easily fabricated in a variety of sizes and shapes and are an inexpensive gasket for heat exchangers, shell, channel, and cover flange joints. Their metal seal makes them unforgiving to irregular flange finishes and cyclic operating conditions.

Jacketed gaskets come in a variety of metal envelope styles. The most common style is double jacketed, shown in Fig. A7.5.

Metallic Gaskets. Metallic gaskets are fabricated from one or a combination of metals to the desired shape and size. Common metallic gaskets are ring-joint gaskets and lens rings. They are suitable for high-temperature and pressure applications and require high-bolt loads to seal.

Ring-Joint Gaskets. Standard ring-joint gaskets can be categorized into three groups: Style R, RX, and BX.

They are manufactured to API 6A and ASME B16.20 standards.

Dimensions of Style R gaskets are shown in Table A7.1.

Style R gaskets are either oval or octagonal. Style RX is a pressure-energized adaptation of the standard Style R ring-joint gasket. The RX is designed to fit the same groove design as the Standard Style R. These gasket styles are shown in Fig. A7.6. Dimensions of RX gaskets are shown in Table A7.9.

Style BX pressure-energized ring joints are designed for use on pressurized systems up to 20,000 psi (138 MPa). Flange faces using BX-style gaskets will come in contact with each other when the gasket is correctly fitted and bolted up. The BX gasket incorporates a pressure-balance hole to ensure equalization of pressure which may be trapped in the grooves. Dimensions of BX gaskets are shown in Table A7.10.

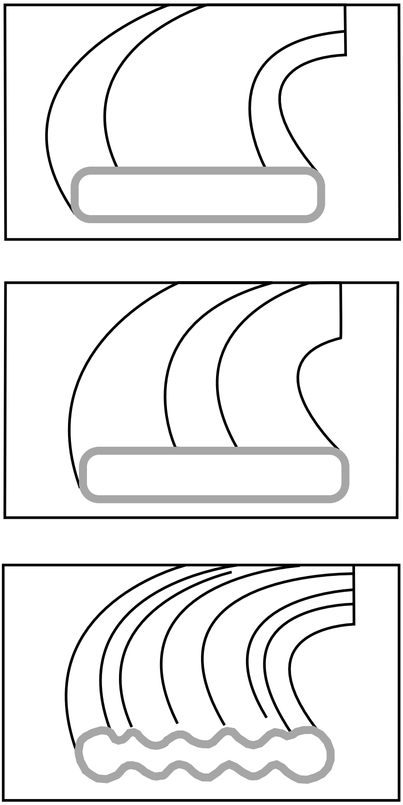

FIGURE A7.5 Double-jacketed gaskets.

Lens Rings Gaskets. Lens rings gaskets have a spherical surface and are suited for use with conical flange faces manufactured to DIN 2696. They are used in specialized high-pressure and high-temperature applications. Standard lens rings gaskets in accordance with DIN-2696 are shown in Table A7.11.

Other specialty metallic seals are available, including welded-membrane gaskets and weld-ring gaskets. These gaskets come in pairs and are seal-welded to their mating flanges and to each other to provide a zero-leakage high-integrity seal.

Bolts and Nuts

Bolts and nuts provide for clamping of the flange and gasket components. Bolting is a term that includes studbolts, nuts, and washers.

Bolting Standards. The following are international standards that pertain to bolting:

ASME B1.1	Unified Inch Screw Threads
ASME B18.2.1	Square and Hex Bolts and Screws

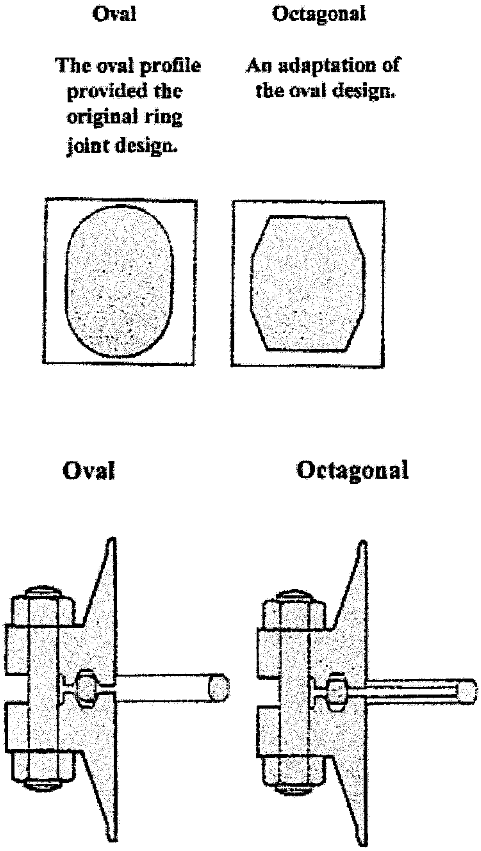
Oval
Octagonal
The oval profile provided the original ring joint design.
An adaptation of the oval design.
Oval
Octagonal

FIGURE A7.6 Style R (oval and octagonal) and RX gaskets.

ASME B18.2.2	Square and Hex Nuts
ASME B18.21.1	Lock Washers
ASME B18.22.1	Plain Washers
ASTM F436	Mechanical Properties of Plain Washers
BS 4882	Bolting for Flanges and Pressure Containing Purposes

Bolts. A bolt is a fastener with a head integral with the shank and threaded at the opposite end. Bolting for flanges and pressure-containing purposes are usually studbolts. Studbolts are fasteners that are threaded at both ends or for the whole length. The general forms of studbolts are shown in Fig. A7.7. Screw threads for studbolts for all materials are shown in Table A7.12. The nominal length of an

TABLE A7.9 Type RX Ring Gasket Dimensions

Ring number	Outside diameter of ring *OD*	Width of ring *A*	Width of flat *C*	Height of outside bevel *D*	Height of ring *H*	Radius in ring R_1	Hole size *E*
RX-20	3.000	0.344	0.182	0.125	0.750	0.06	N/A
RX-23	3.672	0.469	0.254	0.167	1.000	0.06	N/A
RX-24	4.172	0.469	0.254	0.167	1.000	0.06	N/A
RX-25	4.313	0.344	0.182	0.125	0.750	0.06	N/A
RX-26	4.406	0.469	0.254	0.167	1.000	0.06	N/A
RX-27	4.656	0.469	0.254	0.167	1.000	0.06	N/A
RX-31	5.297	0.469	0.254	0.167	1.000	0.06	N/A
RX-35	5.797	0.469	0.254	0.167	1.000	0.06	N/A
RX-37	6.297	0.469	0.254	0.167	1.000	0.06	N/A
RX-39	6.797	0.469	0.254	0.167	1.000	0.06	N/A
RX-41	7.547	0.469	0.254	0.167	1.000	0.06	N/A
RX-44	8.047	0.469	0.254	0.167	1.000	0.06	N/A
RX-45	8.734	0.469	0.254	0.167	1.000	0.06	N/A
RX-46	8.750	0.531	0.263	0.188	1.125	0.06	N/A
RX-47	9.656	0.781	0.407	0.271	1.625	0.09	N/A
RX-49	11.047	0.469	0.254	0.167	1.000	0.06	N/A
RX-50	11.156	0.656	0.335	0.208	1.250	0.06	N/A
RX-53	13.172	0.469	0.254	0.167	1.000	0.06	N/A
RX-54	13.281	0.656	0.335	0.208	1.250	0.06	N/A
RX-57	15.422	0.469	0.254	0.167	1.000	0.06	N/A
RX-63	17.391	1.063	0.582	0.333	2.000	0.09	N/A
RX-65	18.922	0.469	0.254	0.167	1.000	0.06	N/A
RX-66	18.031	0.656	0.335	0.208	1.250	0.06	N/A
RX-69	21.422	0.469	0.254	0.167	1.000	0.06	N/A
RX-70	21.656	0.781	0.407	0.271	1.625	0.09	N/A
RX-73	23.469	0.531	0.263	0.208	1.250	0.06	N/A
RX-74	23.656	0.781	0.407	0.271	1.625	0.09	N/A
RX-82	2.672	0.469	0.254	0.167	1.000	0.06	0.06
RX-84	2.922	0.469	0.254	0.167	1.000	0.06	0.06
RX-85	3.547	0.531	0.263	0.167	1.000	0.06	0.06
RX-86	4.078	0.594	0.335	0.188	1.125	0.06	0.09
RX-87	4.453	0.594	0.335	0.188	1.125	0.06	0.09
RX-88	5.484	0.688	0.407	0.208	1.250	0.06	0.12
RX-89	5.109	0.719	0.407	0.208	1.250	0.06	0.12
RX-90	6.875	0.781	0.479	0.292	1.750	0.09	0.12
RX-91	11.297	1.188	0.780	0.297	1.781	0.09	0.12
RX-99	9.672	0.469	0.254	0.167	1.000	0.06	N/A
RX-201	2.026	0.226	0.126	0.057	0.445	0.02	N/A
RX-205	2.453	0.219	0.120	0.072	0.437	0.02	N/A
RX-210	3.844	0.375	0.213	0.125	0.750	0.03	N/A
RX-215	5.547	0.469	0.210	0.167	1.000	0.06	N/A

TABLE A7.10 Type BX Ring Gasket Dimensions

Ring number	Nominal size (in)	Outside diameter of ring *OD*	Height of ring *H*	Width of ring *A*	Diameter of flat *ODT*	Width of flat *C*	Hole size *D*
BX-150	$1\frac{11}{16}$	2.842	0.366	0.366	2.790	0.314	0.06
BX-151	$1\frac{13}{16}$	3.008	0.379	0.379	2.954	0.325	0.06
BX-152	$2\frac{1}{16}$	3.334	0.403	0.403	3.277	0.346	0.06
BX-153	$2\frac{9}{16}$	3.974	0.448	0.448	3.910	0.385	0.06
BX-154	$3\frac{1}{16}$	4.600	0.488	0.488	4.531	0.419	0.06
BX-155	$4\frac{1}{16}$	5.825	0.560	0.560	5.746	0.481	0.06
BX-156	$7\frac{1}{16}$	9.367	0.733	0.733	9.263	0.629	0.12
BX-157	9	11.593	0.826	0.826	11.476	0.709	0.12
BX-158	11	13.860	0.911	0.911	13.731	0.782	0.12
BX-159	$13\frac{5}{8}$	16.800	1.012	1.012	16.657	0.869	0.12
BX-160	$13\frac{5}{8}$	15.850	0.938	0.541	15.717	0.408	0.12
BX-161	$16\frac{5}{8}$	19.347	1.105	0.638	19.191	0.482	0.12
BX-162	$16\frac{5}{8}$	18.720	0.560	0.560	18.641	0.481	0.06
BX-163	$18\frac{3}{4}$	21.896	1.185	0.684	21.728	0.516	0.12
BX-164	$18\frac{3}{4}$	22.463	1.185	0.968	22.295	0.800	0.12
BX-165	$21\frac{1}{4}$	24.595	1.261	0.728	24.417	0.550	0.12
BX-166	$21\frac{1}{4}$	25.198	1.261	1.029	25.020	0.851	0.12
BX-167	$26\frac{3}{4}$	29.896	1.412	0.516	29.696	0.316	0.06
BX-168	$26\frac{3}{4}$	30.128	0.142	0.632	29.928	0.432	0.06
BX-169	$5\frac{1}{8}$	6.831	0.624	0.509	6.743	0.421	0.06
BX-170	$6\frac{5}{8}$	8.584	0.560	0.560	8.505	0.481	0.06
BX-171	$8\frac{9}{16}$	10.529	0.560	0.560	10.450	0.481	0.06
BX-172	$11\frac{5}{32}$	13.113	0.560	0.560	13.034	0.481	0.06
BX-303	30	33.573	1.494	0.668	33.361	0.457	0.06

inch-series studbolt is the overall length, excluding the point at each end. The ends of the studbolt are finished with a point having an included angle of approximately 90 degrees to a depth slightly exceeding the depth of the thread. Markings indicating the grade of studbolt are applied to one end of the studbolt.

The minimum length of the studbolt should ensure full engagement of the nut such that the point protrudes above the face of the nut. For applications that utilize hydraulic stud-tensioning tools for tightening, one bolt-diameter is added to this minimum length. Hydraulic stud tensioning and other tightening methods are covered later in this chapter. While there is no maximum length of thread, unnecessarily long studs are avoided due to cost and to prevent corrosion and other damage to exposed threads, which would make subsequent removal difficult.

Nuts

Heavy Series. Heavy-series nuts are generally used with studs on pressure piping. The nonbearing face of a nut has a 30-degree chamfer, while its bearing face is finished with a washer face. Dimensions of heavy-series nuts are shown in Table A7.13.

TABLE A7.11 Lens Rings Gasket Dimensions in Accordance with DIN 2696

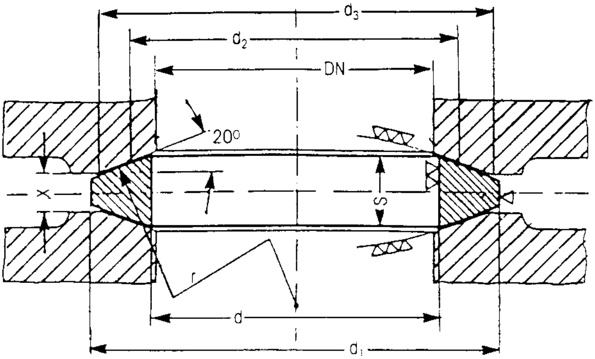

Nominal pipe size DN	d min.	d max.	d_1	S for d max	d_2 middle contact diameter	r	d_3	X
Nominal pressure PN64–400								
10	10	14	21	7	17.1	25	18	5.7
15	14	18	28	8.5	22	32	27	6
25	20	29	43	11	34	50	39	6
40	34	43	62	14	48	70	55	8
50	46	55	78	16	60	88	68	9
65	62	70	102	20	76.6	112	85	13
80	72	82	116	22	88.2	129	97	13
100	94	108	143	26	116	170	127	15
125	116	135	180	29	149	218	157	22
150	139	158	210	33	171	250	183	26
Nominal pressure PN64 and 100								
(175)	176	183	243	41	202.5	296	218	28
200	198	206	276	35	225	329	243	27
250	246	257	332	37	277.7	406	298	25
300	295	305	385	40	323.5	473	345	26
350	330	348	425	41	368	538	394	23
400	385	395	475	42	417.2	610	445	24
Nominal pressure PN160–400								
(175)	162	177	243	37	202.5	296	218	21
200	183	200	276	40	225	329	243	25
250	230	246	332	46	277.7	406	298	25
300	278	285	385	50	323.5	473	345	30

Avoid nominal pipe sizes in brackets.

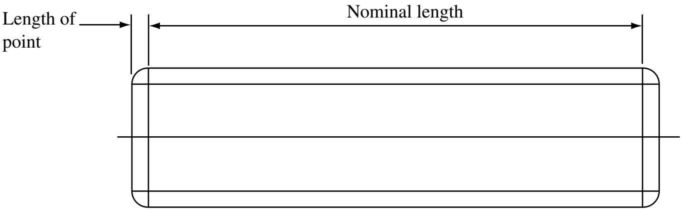
Length of point
Nominal length

(a) Studbolt threaded full length

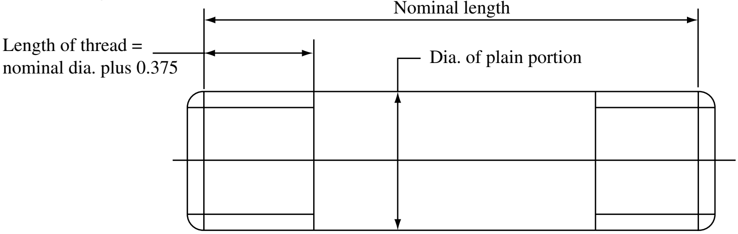
Nominal length
Length of thread = nominal dia. plus 0.375
Dia. of plain portion

(b) Studbolt threaded each end with nominal diameter portion at center

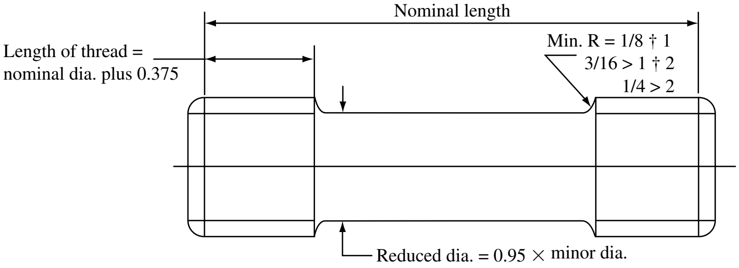
Nominal length
Length of thread = nominal dia. plus 0.375
Min. R = 1/8 † 1
3/16 > 1 † 2
1/4 > 2
Reduced dia. = 0.95 × minor dia.

(c) Studbolt threaded each end with reduced diameter portion at center

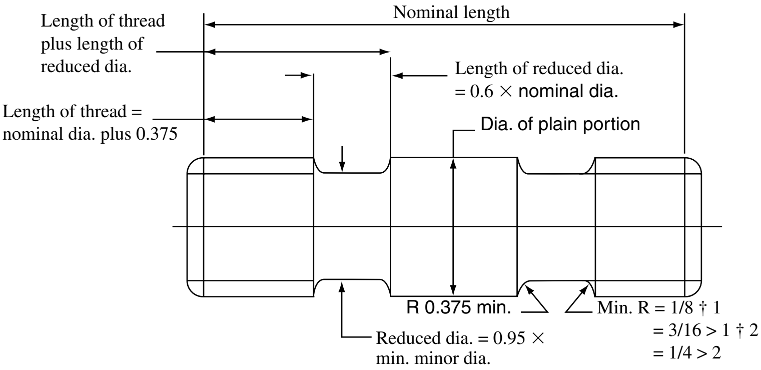
Nominal length
Length of thread plus length of reduced dia.
Length of reduced dia. = 0.6 × nominal dia.
Length of thread = nominal dia. plus 0.375
Dia. of plain portion
R 0.375 min.
Min. R = 1/8 † 1
= 3/16 > 1 † 2
= 1/4 > 2
Reduced dia. = 0.95 × min. minor dia.

(d) Studbolt threaded each end with two reduced diameter portions and nominal diameter portion at center

Dimensions are in inches.

NOTE 1. Exclusion of length to points from nominal length is in agreement with USA oil industry practice.
NOTE 2. Dimensions at each end are the same for all designs. Centering holes are permitted in types (c) and (d).

FIGURE A7.7 Dimensions of studbolts—inch series.

TABLE A7.12 Pitch of Screw Threads for Studbolts

a) Metric sizes

Nominal diameter	Pitch
<M27	ISO Metric coarse (see BS 3643)
≥M30 ≤ M43	3 mm
≥M45 ≤ M100	4 mm

b) Inch sizes

Nominal diameter	Pitch
≤1 inch	ISO Unified inch coarse (UNC)
≥ 1⅛ inch	8 threads/in UN Series

Lock Nuts. The primary purpose of a self-locking nut is to resist loosening under service conditions experiencing vibration and shock. The self-locking nut produces an interference fit between the bolt threads and the nut threads. Most common self-locking nuts contain a nylon insert. The degree of interference is controlled during manufacture of the nylon-insert minor diameter. The elastic nature of the nylon provides uniform reaction from nut to nut. Generally, in pressure-piping systems, the primary concern is obtaining and maintaining proper stud preload to affect the gasket seal. Vibration is not normally a concern in these applications, and in situations where vibration is prevalent, adequate preload control will prevent nut rotation and loosening.

Washers

Flat Washers. Flat washers are used principally to minimize embedment of the nut and to aid torquing. Plain washers are manufactured in accordance with standard ANSI/ASME B18.22.1. Hardened washers are utilized in high-torque applications. Suitable mechanical properties for hardened, stamped, plain washers are covered by ASTM F436. Applicable properties for plain washers rolled from wire shall be AISI 1060 steel or equivalent, heat treated to a hardness of Rockwell C 45–53.

Dimensions of preferred sizes of Type A plain washers are shown in Table A7.14.

Live Loading. Live loading using belleville springs improves the elasticity of the flange joint. A belleville spring is a washer that is dished in the center to give it a cone shape. The cone shape provides for a very stiff spring, in comparison to coil springs. The cone will deflect and flatten at a specified spring rate (ratio of load to deflection) when subjected to the axial load (Fp) generated in a stud. Figure A7.8 shows a section of a belleville spring. Belleville springs are described by the following dimensions:

OD = outside diameter
ID = inside diameter
t = material thickness
h = deflection to flat
H = overall height

TABLE A7.13 Dimensions of Heavy Series Nut—Metric Series

Nominal size and pitch	Width across flats *s*		Width across corners *e*	Thickness *m*		Tolerance on squareness
	max	min	min	max	min	
	mm	mm	mm	mm	mm	mm
M10 × 1.5	16.00	15.57	17.59	8	7.42	0.29
M12 × 1.75	18.00	17.57	19.85	10	9.42	0.32
(M14 × 2)	21.00	20.16	22.78	11	10.30	0.37
M16 × 2	24.00	23.16	26.17	13	12.30	0.41
M20 × 2.5	30.00	29.16	32.95	16	15.30	0.51
(M22 × 2.5)	34.00	33.00	37.29	18	17.30	0.54
M24 × 3	36.00	35.00	39.55	19	18.16	0.61
M27 × 3	41.00	40.00	45.20	22	21.16	0.70
M30 × 3	46.00	45.00	50.85	24	23.16	0.78
M33 × 3	50.00	49.00	55.37	26	25.16	0.85
M36 × 3	55.00	53.80	60.79	29	28.16	0.94
M39 × 3	60.00	58.80	66.44	31	30.00	1.03
M42 × 3	65.00	63.80	72.09	34	33.00	1.11
M45 × 4	70.00	68.80	77.74	36	35.00	1.20
M48 × 4	75.00	73.80	83.39	38	37.00	1.29
M52 × 4	80.00	78.80	89.04	42	41.00	1.37
M56 × 4	85.00	83.60	94.47	45	44.00	1.46
M64 × 4	95.00	93.60	105.77	51	49.80	1.63
M70 × 4	100.00	98.60	114.42	56	54.80	1.76
M72 × 4	105.00	103.60	117.07	58	56.80	1.81
M76 × 4	110.00	108.60	122.72	61	59.80	1.89
M82 × 4	120.00	118.60	134.01	66	64.80	2.02
M90 × 4	130.00	128.60	145.32	72	70.80	2.20
M95 × 4	135.00	133.60	150.97	76	74.80	2.31
M100 × 4	145.00	143.60	162.27	80	78.80	2.42

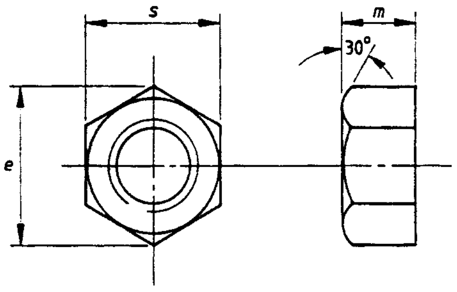

TABLE A7.13 Dimensions of Heavy Series Nut—Inch Series

Nominal size	Threads per inch	Width across flat *s*		Width across corners *e*	Washerface			Thickness *m*		Tolerance on squareness
					Diameter d_w		Thickness *c*			
		max	min	max	max	min		max	min	
in	threads/in	in	in	in	in	in	in	in	in	in
½	13	0.875	0.85	1.01	0.836	0.808	1⁄64	0.504	0.464	0.015
⅝	11	1.062	1.031	1.23	1.013	0.979	1⁄64	0.631	0.587	0.016
¾	10	1.250	1.212	1.44	1.189	1.150	1⁄64	0.758	0.710	0.019
⅞	9	1.438	1.394	1.66	1.366	1.324	1⁄64	0.885	0.833	0.023
1	8	1.625	1.575	1.88	1.539	1.496	1⁄64	1.012	0.956	0.023
1⅛	8	1.812	1.756	2.09	1.710	1.668	1⁄64	1.139	1.079	0.027
1¼	8	2.000	1.938	2.31	1.892	1.841	1⁄64	1.251	1.187	0.027
1⅜	8	2.188	2.119	2.53	2.070	2.013	1⁄64	1.378	1.310	0.030
1½	8	2.375	2.3	2.74	2.251	2.185	1⁄64	1.505	1.433	0.030
1⅝	8	2.562	2.481	2.96	2.433	2.857	1⁄64	1.632	1.566	0.030
1¾	8	2.750	2.662	3.18	2.605	2.529	1⁄64	1.759	1.679	0.030
1⅞	8	2.938	2.844	3.39	2.779	2.702	1⁄64	1.886	1.802	0.035
2	8	3.125	3.025	3.61	2.949	2.874	1⁄64	2.013	1.925	0.035
2¼	8	3.500	3.388	4.04	3.296	3.219	1⁄32	2.251	2.155	0.040
2½	8	3.875	3.75	4.47	3.65	3.563	1⁄32	2.505	2.401	0.045
2¾	8	4.250	4.112	4.91	4.012	3.906	1⁄32	2.759	2.647	0.050
3	8	4.625	4.475	5.34	4.373	4.251	1⁄32	3.013	3.893	0.055
3½	8	5.375	5.2	6.21	5.061	4.94	1⁄32	3.506	3.370	0.060
3¾	8	5.750	5.563	6.64	5.42	5.27	1⁄32	3.760	3.616	0.065
4	8	6.125	5.925	7.07	5.78	5.62	1⁄32	4.014	3.862	0.070

Note: The dimensions are illustrated in figure 6.

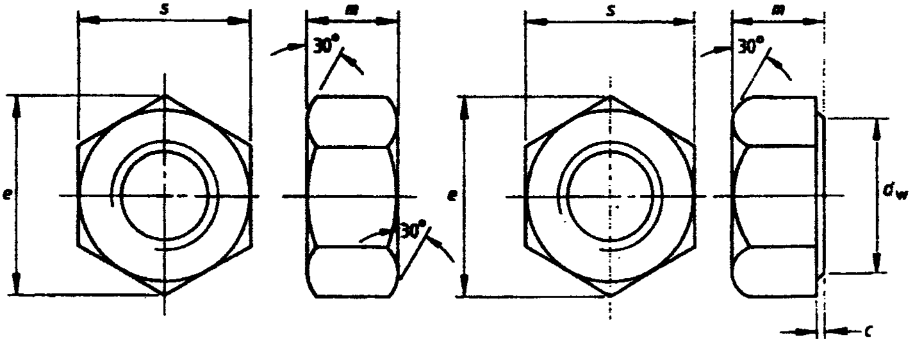

Flange assemblies always tend to relax in time, particularly at elevated temperatures. The rate of relaxation is dependent on many factors, including embedment relaxation of studs and nuts, flange rotation, bolt creep, and gasket creep. The relaxation phenomenon is covered more fully in the section "Behavior of the Flanged Joint System." The high load-deflection or spring rate, characteristics of belleville springs, aid in maintaining bolt preload, compensating for some of the joint relaxation.

The spring rate of a belleville spring depends on geometry, material, and loading conditions. The load-deflection characteristics can be varied by stacking springs in combinations of series and parallel stacks. Figure A7.9 shows load-deflection curves

TABLE A7.14 Dimensions of Preferred Sizes of Type A Plain Washers

Normal washer size	A			B			C		
	Inside diameter tolerance			Outside diameter tolerance			Thickness		
	Basic	Plus	Minus	Basic	Plus	Minus	Basic	Max	Min
No. ⅝ 0.625 N	0.656	0.030	0.007	1.312	0.030	0.007	0.095	0.121	0.074
⅝ 0.625 W	0.688	0.030	0.007	1.750	0.030	0.007	0.134	0.160	0.108
¾ 0.750 N	0.812	0.030	0.007	1.469	0.030	0.007	0.134	0.160	0.108
¾ 0.750 W	0.812	0.030	0.007	2.000	0.030	0.007	0.148	0.177	0.122
⅞ 0.875 N	0.938	0.007	0.030	1.750	0.030	0.007	0.134	0.160	0.108
⅞ 0.875 W	0.938	0.007	0.030	2.250	0.030	0.007	0.165	0.192	0.136
1 1.000 N	1.062	0.007	0.030	2.000	0.030	0.007	0.134	0.160	0.108
1 1.000 W	1.062	0.007	0.030	2.500	0.030	0.007	0.165	0.192	0.136
1⅛ 1.125 N	1.250	0.030	0.007	2.250	0.030	0.007	0.134	0.160	0.108
1⅛ 1.125 W	1.250	0.030	0.007	2.750	0.030	0.007	0.165	0.192	0.136
1¼ 1.250 N	1.375	0.030	0.007	2.500	0.030	0.007	0.165	0.192	0.136
1¼ 1.250 W	1.375	0.030	0.007	3.000	0.030	0.007	0.105	0.192	0.136
1⅜ 1.375 N	1.500	0.030	0.007	2.750	0.030	0.007	0.165	0.192	0.136
1⅜ 1.375 W	1.500	0.045	0.010	3.250	0.045	0.010	0.180	0.213	0.153
1½ 1.500 N	1.625	0.030	0.007	3.000	0.030	0.007	0.165	0.192	0.136
1½ 1.500 W	1.625	0.045	0.010	3.500	0.045	0.010	0.180	0.213	0.153
1⅝ 1.625	1.750	0.045	0.010	3.750	0.045	0.010	0.180	0.213	0.153
1¾ 1.750	1.875	0.045	0.010	4.000	0.045	0.010	0.180	0.213	0.153
1⅞ 1.875	2.000	0.045	0.010	4.250	0.045	0.010	0.180	0.213	0.153
2 2.000	2.125	0.045	0.010	4.500	0.045	0.010	0.180	0.213	0.153
2¼ 2.250	2.375	0.045	0.010	4.750	0.045	0.010	0.220	0.248	0.193
2½ 2.500	2.625	0.045	0.010	5.000	0.045	0.010	0.238	0.280	0.210
2¾ 2.750	2.875	0.065	0.010	5.250	0.065	0.010	0.259	0.310	0.228
3 3.000	3.125	0.065	0.010	5.500	0.065	0.010	0.284	0.327	0.249

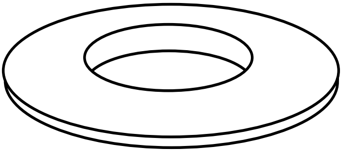

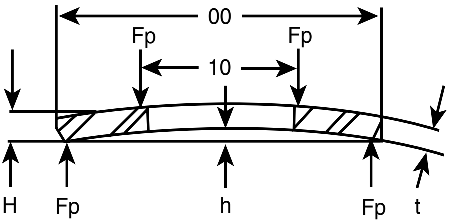

FIGURE A7.8 Section of Belleville spring.

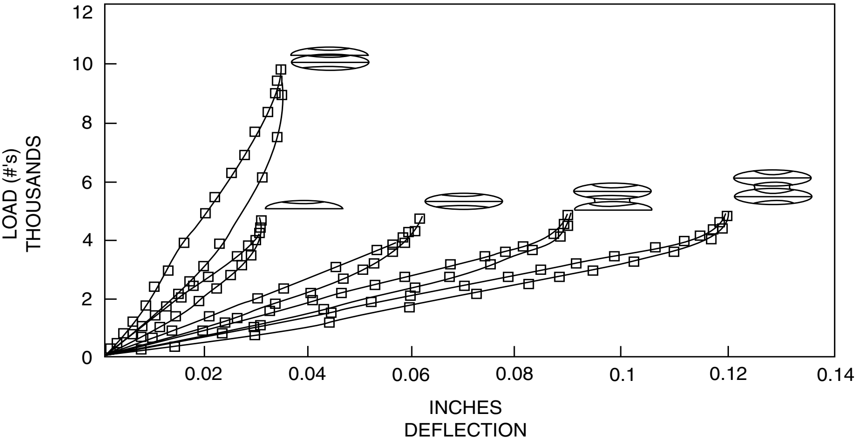

FIGURE A7.9 Load deflection in curves of several Belleville arrangements.

of several different belleville arrangements. The hysteresis between increasing and decreasing load (the upper and lower curves, respectively) is caused by the friction between the spring and the loading surfaces. Two springs stacked in parallel doubles the load to flatten the pair with no further increase in deflection. Two springs stacked in series will produce twice the deflection at the same load.

FUNCTION OF GASKETS

The function of a gasket is to conform to the irregularities of the flange faces to affect a seal, preventing the inside fluid from leaking out. See Fig. A7.10 for a typical flange-gasket arrangement. The leak performance of the gasket is dependent on the stress on the gasket during operation. Each different type of gasket has its own inherent leak-tightness capabilities. The higher the gasket stress, the higher the leak-tightness capability.

The ideal gasket is comprised of a body with good load-bearing and recovery characteristics, with a soft conformable surface layer. Gaskets have a combination of elastic and plastic characteristics. Ideal gaskets should have the following properties:

1. **1.** Compressibility—Gaskets that have sufficient compressibility to suit the style and surface finish of the flange, ensuring that all the imperfections will be filled with the gasket material.
2. **2.** Resilience—Gaskets that have high resilience will enable the gasket to move with the dynamic loadings of the flange to maintain its seating stress.
3. **3.** No change in thickness—Gaskets that will not continue to deform under varying load cycles of temperature and pressure or under a constant load at elevated temperatures (creep).

Unfortunately, most gaskets available on the market are not ideal gaskets. Most gaskets usually just have one or sometimes two of the above properties. For critical

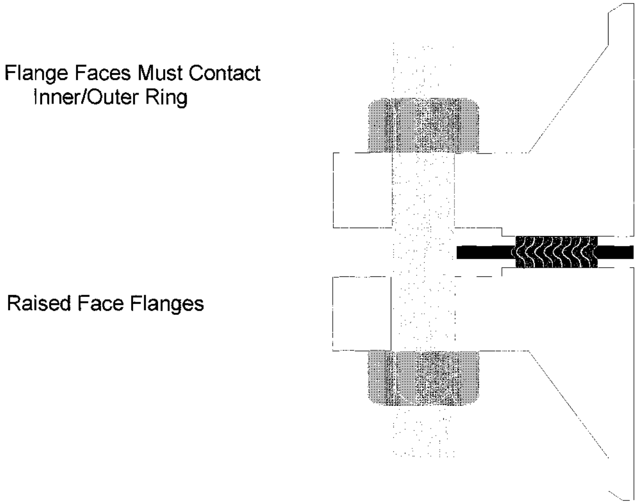

FIGURE A7.10 Typical flange gasket arrangement.

applications, designers are always on the lookout for gaskets that have all three properties.

The most difficult, often critical, property required of a gasket is its ability to resist creep during operation. In high-temperature services, the flanges will heat up at a faster rate than the bolts and under steady-state conditions will continue to be hotter than the bolts as a result of the thermal gradient. This results in a higher thermal expansion of the flanges with respect to the bolts, increasing the boat load and concurrently the gasket stress. The gasket will then deform under the higher applied load during this cycle. Most gaskets will deform permanently and will not rebound when the load cycle goes away with varying conditions. The permanent set or plastic deformation that occurred during operation will cause loss of bolt load and concurrently loss of gasket stress. As gasket stress decreases leak rate increases.

FUNCTION OF BOLTS

The function of a bolt is to provide a clamp load or preload (Fp) to sufficiently compress and stress the gasket and resist the parting forces exerted by the hydrostatic end force and other external loads. The hydrostatic end force is created by the pressure of the internal fluid across the internal area of flange. The internal area is generally the inside diameter of the sealing element.

All bolts behave like a heavy spring. As you turn down the nut against the flange, the bolt stretches and the flange and gasket compress. All bolt-tightening methods result in stretching the bolt. The torque-tightening method uses the thread helix of turning the nut against the reactive forces of the flange to stretch the bolt. The hydraulic bolt-tensioning method utilizes an annular piston threaded on the end of the bolt to provide an axial stretch. Torque tightening and hydraulic bolt tensioning are discussed in the section "Methods of Bolt Tightening." In its elastic region, bolts stretch according to Hooke's law:

$$\Delta L_b = \frac{Fp \times L_b}{E \times A_s} \tag{A7.1}$$

ΔL_b = Change in length of bolt, in (mm)

F_p = Applied tensile load (Preload), lb (kN)

L_b = Effective length of bolt Length of bolt in which tensile stress is applied, in (mm)

E = Young s Modulus of Elasticity, psi (N/mm^2)

A_s = Tensile stress area of bolt, in^2(mm^2)

$= 0.7854(D - 0.9743/n)^2$

where D = Nominal diameter of bolt
n = is the number of threads per in

Preload is the applied bolt load generated during tightening.

BEHAVIOR OF THE FLANGED JOINT SYSTEM

It is important to recognize that the individual components of flanges, gaskets, nuts, and bolts operate together as a system. Gasket companies are continually fielding questions from concerned users about their "gasket" leakage. Gasket leakage is symptomatic of a broader problem. To focus exclusively on the gasket as the cause of the leakage fails to recognize that the flange joint operates as a system, and a systems approach should be used to design flange joints and trouble shoot flange problems.

Under actual operating conditions, the confined fluid, under pressure, creates a hydrostatic end force trying to separate the flange faces. The preload developed in the bolts keeps the flanges together while maintaining a residual gasket-seating stress. The internal pressure of the fluid tries to move, go through, or bypass the gasket. This is illustrated in Fig. A7.11, "What Happens under Actual Operating Conditions."

Joint Stiffness

The flange joint consists of a series of springs in a combination of tension and compression. The bolts are springs in tension, while the flange is a spring in compression. The interaction of the two depends on their respective stiffness. The interaction between the stiffness of the bolt and flange can be represented by a joint diagram. See Fig. A7.12, "Joint Diagram of Simple Elastic Joints."

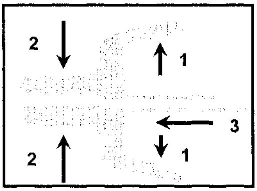

1. ***END FORCE -*** *which originates with the pressure of the confined media - trying to separate the flange faces*
2. ***GASKET LOAD -*** *or Bolting Load - tries to keep the flange faces together to compress the gasket.*
3. ***INTERNAL PRESSURE -*** *which tries to move, go through, or by-pass the gasket.*

FIGURE A7.11 What happens under actual operating conditions.

The stiffness of the bolt is:

$$K_b = \frac{F_p}{\Delta L_b} \qquad \frac{\text{lb}}{\text{in}}\,\frac{(\text{kN})}{(\text{mm})} \tag{A7.2}$$

The stiffness of the joint is:

$$K_i = \frac{F_p}{\Delta L_j} \qquad \frac{\text{lb}}{\text{in}}\,\frac{(\text{kN})}{(\text{mm})} \tag{A7.3}$$

where F_p = Preload lb(kN)
ΔL_b = Change in length of bolt, in (mm)
ΔL_j = Change in compression of joint, in (mm)

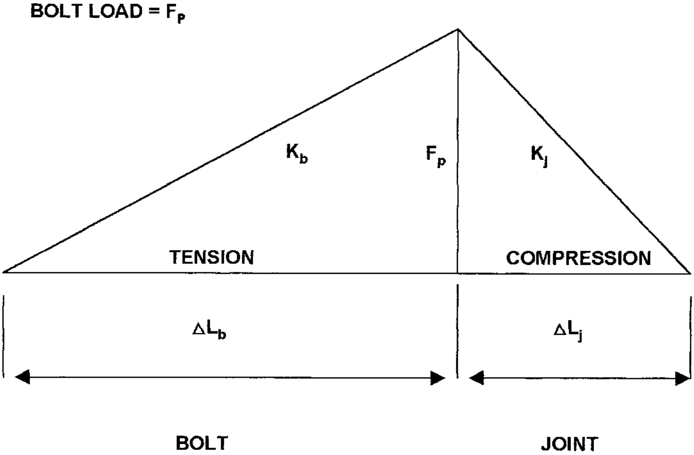

FIGURE A7.12 Joint diagram of simple elastic joints.

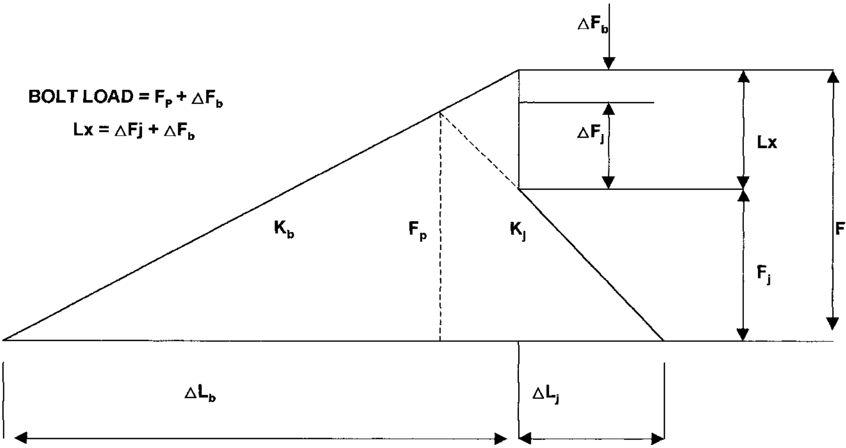
BOLT LOAD = $F_p + \Delta F_b$
$Lx = \Delta Fj + \Delta F_b$
ΔF_b
ΔF_j
Lx
K_b
F_p
K_j
F_j
F_b
ΔL_b
ΔL_j

FIGURE A7.13 Joint diagram with external tensile load (Lx).

At the mating surfaces, the bolt sees the preload (F_p) in tension while the joint sees the same preload in compression. Their deflection under this preload is proportional to their respective stiffness.

If an external tensile load (L_x) is applied (i.e., pressure end force), the bolt load increases and the bolt lengthens, while the joint unloads. The change in deformation of the bolt equals its change in deformation of the joint such that they maintain contact with each other. The external load is shared between the bolts and the joint in proportion to their stiffness. This is illustrated in Fig. A7.13.

In a flange joint containing a gasket, behavior is governed to a great degree by the gasket. Unfortunately, the gasket stiffness is nonlinear and very difficult to predict. Gaskets unload quickly following a steep curve, as shown in Fig. A7.14.

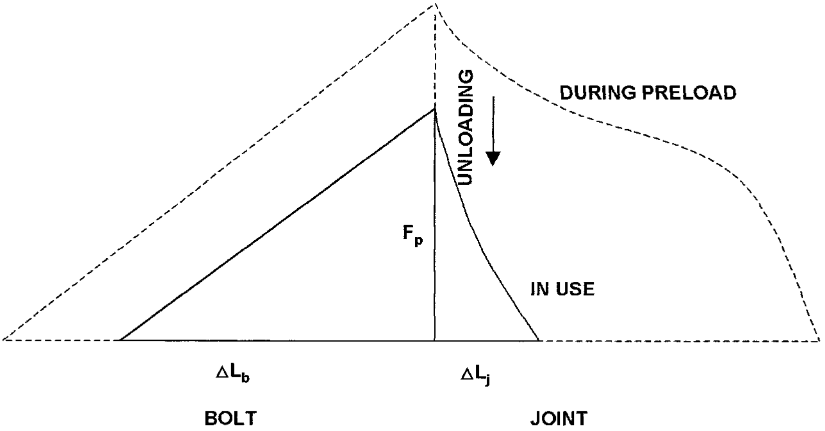
UNLOADING
DURING PRELOAD
F_p
IN USE
ΔL_b
ΔL_j
BOLT
JOINT

FIGURE A7.14 Joint stiffness diagram for a flanged connection with spiral wound gasket.

Therefore, externally applied loads have a significant effect on reducing the stress of the gasket. A sufficiently high enough bolt preload is required to compensate for gasket unloading in order to maintain sufficient stresses to seal during operation. If the bolt preload is lost due to bolt creep, gasket creep, or flange rotation, the gasket stress drops dramatically and leakage follows.

Elastic Interaction

As one bolt is tightened, the flange and gasket partially compress in relation to their relative stiffness. As subsequent bolts are tightened, the joint compresses further. As each additional bolt is tightened, the compression on the joint will tend to reduce the preload in adjacent bolts. Figure A7.15 shows the elastic behavior of a simplified four-bolt flange. After tightening bolts 1 and 2, bolts 3 and 4 are tightened by compressing the joint further and relaxing the previously tightened bolts 1 and 2. The effect of tightening bolts separately and affecting the loads in adjacent bolts is referred to as elastic interaction, or cross talk. Elastic interaction is one reason why wide scatter in bolt preloads are found in flanged joints. Figure A7.16 shows a typical load scatter of a 28-bolt heat-exchanger channel to shell flange. The top line is the preload for each stud as it was originally tightened with torquing. Notice the wide variation in bolt load with this method of tightening.

Relaxation of the Flange Joint

Flange joint relaxation is one of the most important areas to consider when designing or troubleshooting flange systems. Over and over again, flanges are hydrostatically tested to verify conformance to leak tightness requirements. After successful hydrostatic testing, some flanged joints are found to be leaking during startup, shutdown, or at some time during their operating life. Verification of actual bolt load (using ultrasonic measurement) has revealed that the residual load in the studs after the hydrostatic test is usually lower than the original bolt preload achieved during tightening.

Relaxation of the bolt load observed is due to permanent deformation of the

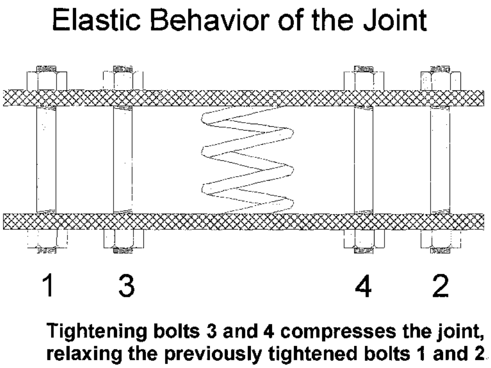
Elastic Behavior of the Joint

Tightening bolts 3 and 4 compresses the joint, relaxing the previously tightened bolts 1 and 2

FIGURE A7.15 Elastic behavior of simplified 4-bolt flange.

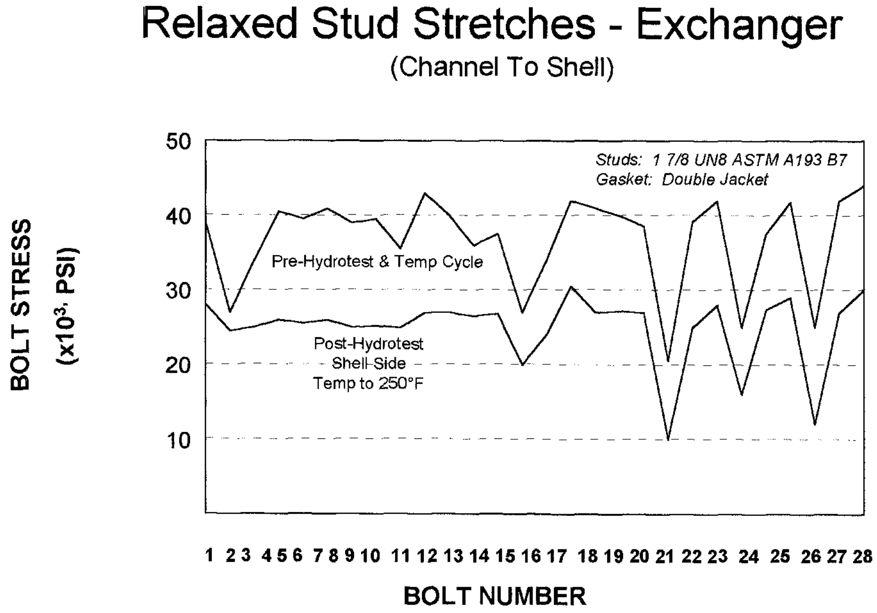

FIGURE A7.16 Typical load scatter of 28-bolt heat exchanger.

gasket element experienced as a result of the pressure test loads. During the hydrostatic test, high external compressive loads are added to the gasket. The gasket will continue to compress (deform) as a result of the additional hydrostatic end load. Since most gaskets have poor elastic properties, the hydrostatic end force will result in permanent deformation of the gasket. On conclusion of the hydrostatic test, the permanent deformation of the gasket will be seen as loss of bolt load and overall joint relaxation. This is illustrated in Fig. A7.16. The lower curve is the residual bolt load measured after the hydrostatic test.

The wide scatter shown is consistent with uncontrolled tightening techniques. The relaxation effects are typical of gaskets that continue to deform under varying load cycles of temperature and pressure or poor creep resistance at elevated temperatures. This flange would likely leak at any number of points in its operating life. The wide scatter of the bolt loads illustrated in Fig. A7.16 may lead to failure after the hydrostatic test.

With the wide load scatter in combination with relaxation of the joint after hydrotest, the joint may leak during startup. In addition, operating temperatures and pressure cycles will continue to relax the joint until there is insufficient bolt load and gasket stress at a particular position around the flange to maintain a seal, and leakage results.

Operating relaxation of the flanged joint is affected by the creep-resistant material properties of the flange, studbolts, and gaskets. Materials that continue to creep (deform) during operation will lead to leakage.

The solution to relaxation-affected leak problems is to

1. Control the initial bolt preload to eliminate the wide scatter around the flange

and to ensure the bolt loads are sufficient to maintain a seal throughout the operating life. Controlled bolting is described more fully later in this chapter.

2. Design and install components that are resistant to creep by ensuring that they are suitable for the operating temperatures and pressures.

GASKET SELECTION

The proper selection of gasket is critical to the success of achieving long-term leak tightness of flanged joints. Due to their widespread usage, gaskets are often taken for granted. Industry demands for reduced flange leakage in environments of increasing process temperatures and pressures have led gasket manufacturers to develop a wide variety of gasket types and materials, with new gaskets being introduced on an ongoing basis. This rapidly changing environment makes, and will continue to make, gasket selection difficult.

It is highly recommended that the gasket manufacturer be consulted on the proper selection of gaskets for each application. Gasket manufacturers are familiar with the industry codes and standards and conduct extensive testing of their products to ascertain performance under a variety of operating conditions.

Flange design details, service environment, and operating performance guide the gasket selection process. Start with the flange design. Identify the appropriate flange standard, outlining size, type, facing, pressure rating, and materials (i.e., ASME B16.5, NPS 4, Class 1500, RF, carbon steel). Identify the service environment of temperature, pressure, and process fluid. It is useful to highlight gasket-operating performance.

Gasket-Operating Performance

New flange and gasket designs are incorporating tightness factors in their calculations to reduce leak rates. Traditional ASME Section VIII code utilizes m and y gasket factors in the design calculations of flanges. These factors are useful to establish the flange design required to help ensure the overall pressure integrity of the system; however, they are not useful parameters to predict flange leak rates.

All flanges leak to a certain degree. Industry requirements are demanding reduction in leak rates along with predictable performance. This has lead to a more rigorous approach to establishing gasket factors and the associated methods for gasketed flanged-joint design.

Significant progress has been made in the last six years in Europe by CEN and in North America by ASME's Pressure Vessel Research Council (PVRC) to establish gasket test procedures and the development of design constants that greatly improve the gasketed flanged-joint design. Maximum allowable leak rates have been established for various classes of equipment. EPA Fugitive Emissions basic limits are shown below.

Component	Allowable leakage level
Flange	500 ppmv
Pump	1,000 ppmv
Valve	500 ppmv
Agitator	10,000 ppmv

PVRC has established a new set of gasket factors, G_b, a, and G_s and a related tightness parameter, T_p, which can be used in place of traditional m and y factors in determining required bolt load.

G_b and a (Part A testing) represent the initial gasket-compression characteristics. G_b is the gasket stress at a tightness parameter (T_p) of 1; a is the slope of the line of gasket stress versus tightness parameter plotted on a log-log curve. This line shows that the tightness parameter (or leak tightness) increases with increasing gasket stress. That is, the higher the gasket stress, the lower the expected leakage. G_s is the unloading (Part B) gasket stress at a $T_p = 1$.

A low value of G_b indicates that the gasket requires low levels of gasket stress for initial seating. Low values of G_s indicate that the gasket requires lower stresses to maintain tightness during operation and can tolerate higher levels of unloading, which maintain sealability. An idealized tightness curve showing the basis for gasket constants G_b, a, and G_s is shown in Fig. A7.17.

The data for many gasket styles and materials have been published in various PVRC-sponsored publications. Typical PVRC gasket factors for a variety of gasket types are shown in Table A7.15.

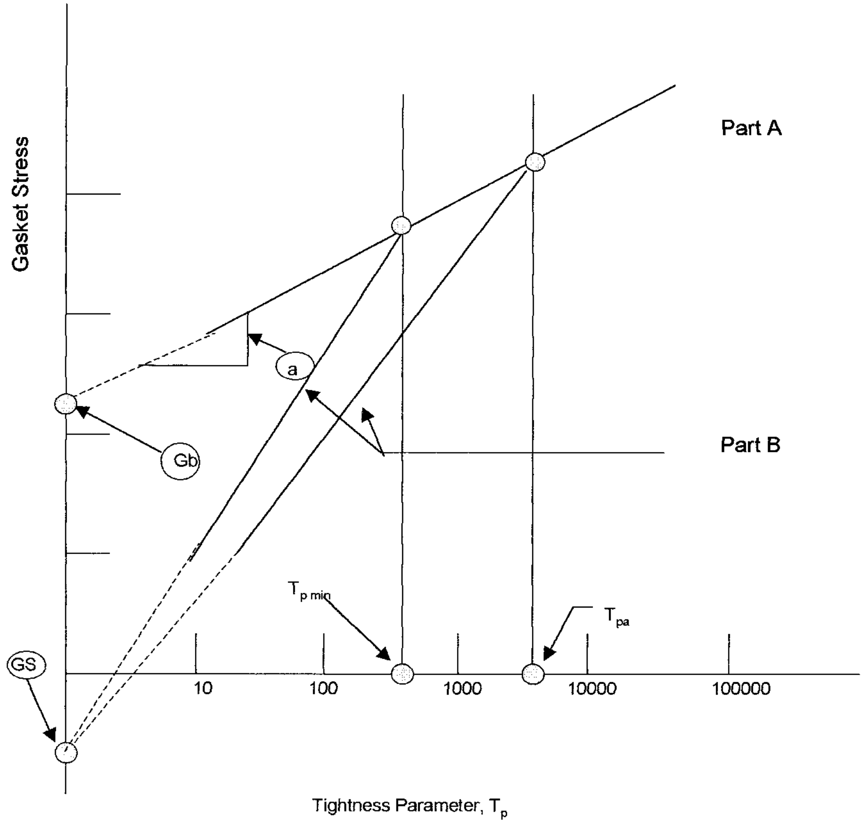

FIGURE A7.17 PVRC idealized tightness curve.

TABLE A7.15 Typical PVRC Gasket Factors

Type	Material	Gb(psi)	a	Gs(psi)
Spiral wound (Class 150 to 2500)	SS/Graphite	2300	0.237	13
	SS/Graphite with inner-ring	2530	0.241	4
	SS/Asbestos	3400	0.300	7
Metal-reinforced graphite	SS/Graphite	1665	0.293	0.02
Sheet gaskets	Graphite	1047	0.35	0.07
	Expanded PTFE	310	0.352	3.21
	Filled PTFE	444	0.332	.013
	CAF	2500	0.15	117
Corrugated gaskets	Soft iron	3000	0.160	115
	Stainless steel	4700	0.150	130
	Soft copper	1500	0.240	430
Metal jacketed	Soft iron	2900	0.230	15
	Stainless steel	2900	0.230	15
	Soft copper	1800	0.350	15
Metal-jacketed corr.	Soft iron	8500	0.134	230
Camprofile	SS/Graphite	387	0.33	14

Note: All data presented in this table is based on currently available published information. The PVRC continues to refine data-reduction techniques, and values are therefore subject to further review and alteration.

PVRC Convenient Method. The PVRC Convenient Method provides an easy conservative method for determining bolt load (W_{mo}) used in flange and gasket design as an alternate to using m and y values.

Gasket operating stress

$$S_{m1} = G_s[G_b/G_s \times T_{pa}{}^{a}]^{1/Tr} \qquad \text{(A7.4)}$$

Seating stress

$$S_{m2} = G_b[e \times 1.5]\, T_{pa}{}^{a} = Pd[Ai/Ag] \qquad \text{(A7.5)}$$

Design factor

$$M_o = \text{the greater of } \frac{S_{m1}}{Pd} \text{ or } \frac{S_{m2}}{Pd} \text{ or } 2 \qquad \text{(A7.6)}$$

Design bolt load

$$W_{mo} = Pd(AgMo + Ai) \qquad \text{(A7.7)}$$

where a—The slope associated with Part A tightness data

A_g—Area of gasket-seating surface, in^2 (mm^2) $= .7854(\text{OD}^2 - \text{ID}^2)$

A_i—Hydrostatic area; the area against which the internal pressure is acting, in^2 (mm^2) $= .7854G^2$

b_o—Basic gasket seating width, in (mm)
$b_o = (\text{OD} - \text{ID})/4$

b—Effective gasket seating width

$b = b_o$, when $b_o \leq \frac{1}{4}$ in

$b = \sqrt{b_o/2}$, when $b_o > \frac{1}{4}$ in, in (mm)

C—Tightness constant
$C = 0.1$ for tightness class T1 (economy)
$C = 1.0$ for tightness class T2 (standard)
$C = 10.0$ for tightness class T3 (tight)

e—Joint assembly efficiency; recognizes that gasket-operating stress is improved depending on the actual gasket stress achieved during boltup; also recognizes the reliability of more sophisticated bolting methods and equipment in actually achieving desired bolt loads
$e = 0.75$ for manual boltup
$e = 1.0$ for "ideal" boltup, e.g., hydraulic stud tensioners, ultrasonics

G—Diameter of location of gasket load reaction, in (mm), from ASME Section 8

$$G = \frac{(\text{OD} + \text{ID})}{2} \text{ if } b_o \leq \tfrac{1}{4} \text{ in, in (mm)}$$

$$= \text{OD} - 2b, \text{ if } b_o > \tfrac{1}{4} \text{ in, in (mm)}$$

G_b—The stress intercept at $T_p = 1$, associated with Part A tightness data psi (MPa)

G_s—The stress intercept at $T_p = 1$, associated with Part B tightness data psi (MPa)

P_d—Design pressure, psi (MPa)

P_t—Test pressure (generally 1.5 × P_d), psi (MPa)

S_{m1}—Operating gasket stress, psi (MPa)

S_{m2}—Seating gasket stress, psi (MPa)

M_o—Design factor

TC—Tightness class that is acceptable for the application, depending on the severity of the consequences of a leaker
T1 (economy) represents a mass leak rate per unit diameter of 0.2 mg/sec-mm
T2 (standard) represents a mass leak rate per unit diameter of 0.002 mg/sec-mm
T3 (tight) represents a mass leak rate per unit diameter of 0.0002 mg/sec-mm

T_p—Tightness parameter. T_p is a dimensionless parameter used to relate the performance of gaskets with various fluids, based on mass leak rate. Recognizes that leakage is proportional to gasket diameter (leak rate per unit diameter). T_p is the pressure (in atmospheres) required to cause a helium leak rate of 1 mg/sec for a 150 mm OD gasket in a joint. PVRC researchers have related T_p to other fluids through actual testing as well as use of laminar flow theory.

T_{pa}—Assembly tightness; the tightness actually achieved at assembly $= .1243 \times C \times P_t$

$T_{p\min}$—Minimum tightness; the minimum acceptable tightness for a particular application $= .1243 \times C \times P_d$

T_r—Tightness ratio; $= \log (T_{pa})/\log (T_{p\min})$

W_{mo}—Design bolt load, lb (kN)

Example A7.1 Example of PVRC Convenient Method

Input data

Application: Heat exchanger. Reboiler channel

Design pressure $(P_d) = 400$ psi

Test pressure $(P_t) = 600$ psi

Operating temperature

Gasket type: camprofile

Gasket dimensions ID $= 37.63$ in

OD $= 38.88$ in

Tightness class required T3, therefore $C = 10.0$

Assembly efficiency $(e) = 1.0$, using hydraulic stud tensioners

From Table A7.15 $G_b = 387$ psi

$a = .33$

$G_s = 14.0$ psi

Calculations:

$G = 38.32$ in

$A_g = 75.10$ in^2

$A_i = 1{,}153.8$ in^2

$T_{p\min} = 497.20$

$T_{pa} = 745.80$

$T_p = 1.07$

$S_{m1} = 2{,}450$ psi

$S_{m2} = (3{,}852)$ psi

$$M_o = \frac{2{,}450}{400} = 6.13$$

Design total bolt load to achieve T3 leak tightness

$$W_{mo} = 400 \times (75.10 \times 6.13 + 1{,}153)$$
$$= 645{,}345 \text{ lb}$$

To illustrate the usefullness of PVRC calculations in gasket selection, the following example shows the same calculations using a double-jacketed gasket typically found in the above application instead of the camprofile.

Input data (as above except)

Gasket type: Double jacketed

$$G_b = 2900 \text{ psi}$$

$$a = .23$$

$$G_s = 15$$

This changes the calculation of S_{m1} and S_{m2} to

$$S_{m1} = 8{,}759 \text{ psi}$$

$$S_{m2} = 2{,}709 \text{ psi}$$

$$M_o = 21.90$$

$$W_{mo} = 1{,}119{,}255 \text{ lb}$$

TABLE A7.16 Application of Types of Gaskets

	Pressure class			
Gasket type	Low Class 150–300	Medium Class 600–900	High Class 1500–2500	Maximum temperature of materials (°F)
Nonmetallic				
–CAF	x	—	—	650–1000
–Nonasbestos fibre	x	—	—	550
–PTFE	x	—	—	390–550
–Graphite	x	—	—	750
Semimetallic				
–Metal jacketed	x	x	—	750+*
–Metal reinforced graphite	x	x	—	750+*
–Spiral wound	x	x	x	750+*
–Camprofile	x	x	x	750+*
Metallic				
–Ring-joint gaskets	—	x	x	650+*
–Lens ring	—	x	x	650+*
–Machined ring	—	x	x	650+*

x applicable
– not applicable
* depends on material

The total bolt load to achieve the same leak tightness of T3 is 1,119,255 lb.

These examples would indicate that higher leak tightness can be achieved using the camprofile gasket versus the double-jacketed gasket under the design conditions outlined.

Types of Gaskets

As discussed earlier, gaskets can be defined into three main categories: nonmetallic, semimetallic, and metallic. The general applications for each gasket type are shown in Table A7.16.

High Temperature Selection

In high temperature applications, above 650°F (343°C), gasket selection becomes even more critical. Many gaskets may perform well at low temperatures but fail to meet leak-tightness requirements at elevated temperatures.

Many gaskets lose their resiliency at elevated temperatures, with changes in their elastic behavior. The gasket's inherent stiffness will also tend to diminish, resulting in the gasket continuing to deform under the applied flange loads. This deformation (or creep) will result in loss of gasket stress, bolt load, and leak tightness. In elevated temperature applications, search out materials that retain their resiliency and gasket designs that will not change in thickness (retain its stiffness).

Considerable technical information on gasket selection is available from gasket manufacturers and from other technical sources such as the Pressure Vessel Research Council and industry trade associations such as the Fluid Sealing Association (FSA).

BOLT SELECTION

Bolts and nuts should be selected to conform to the design specifications set out with the flange design. Care is taken to ensure that the correct grade of material is selected to suit the recommended bolting temperature and stress ranges. Material specifications for bolts are outlined in BS 4882 and ASME Section VIII.

Common material specifications for bolts and nuts are shown in Table A7.17.

The following information should be specified when ordering bolts and nuts:

1. Quantity
2. Grade of material, identifying symbol of bolt or nut
3. Form
    - Bolts or studbolts
    - Nuts, regular or heavy series
4. Dimensions
    - Nominal diameter, length
    - Diameter of plain and reduced portion, length of thread (if applicable)
5. Identification of tests in addition to those stated in the standard
6. Manufacturer's test certificate (if required). Fully threaded studbolts and heavy series nuts are most common in industrial applications.

TABLE A7.17 Material Specifications for Bolts and Nuts and Recommended Bolting Temperature Range

Material specifications	Alloy types	Mechanical properties						Recommended corresponding nut grades
		Tensile strength		Yield strength .2% proof stress min		Recommended bolting temperature range(1) °C		
		N/mm^2	psi	N/mm^2	psi	min	max	
B7, L7 BS 1506–621A	1% Chromium molybdenum steel	860	123,000	730	103,000	−100	400	2H, 4, 7, or 8 (L4, 7 or 8 with L7 bolts)
B16 BS 1506–661	1% Chromium molybdenum vanadium steel	860	123,000	730	103,000	0	520	4, 7, or 8
B8, L8 BS 1506–801B	Austenitic chromium nickel 18/8 type steel	540	77,000	210	30,000	−250	575	8, 8F
B8, CX BS 1506–821T:	Stabilized austenitic chromium nickel 18/8 type steel, cold worked after solution treatment	860	123,000	700	99,000	−250	575	8 CX
B17B	Precipitation hardening austenitic nickel chromium steel	900	128,000	590	84,000	−250	650	17B
B80A BS 3076 NA20	Precipitation hardening nickel chromium titanium aluminum alloy	1000	143,000	620	88,000	−250	750	80A

Note: (1) Temperature of bolting refers to actual metal temperatures.

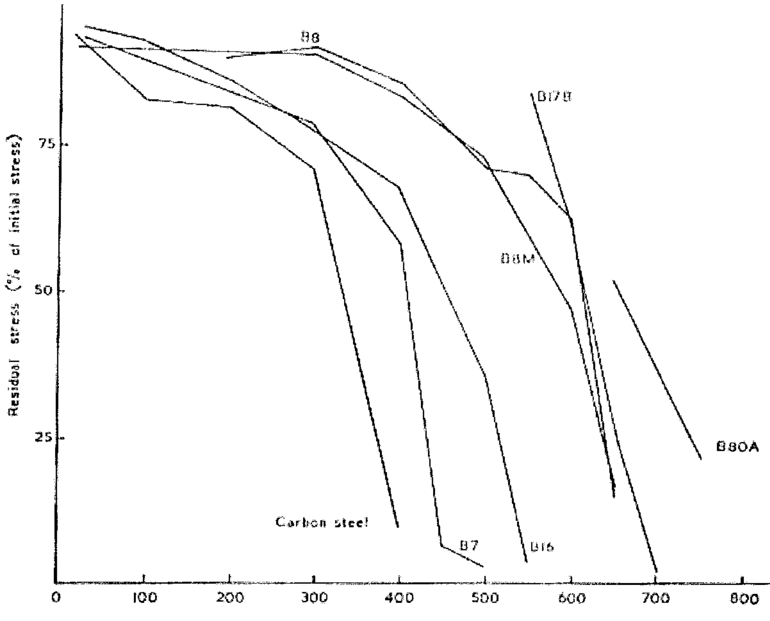

FIGURE A7.18 Stress relaxation behavior of various bolting materials showing percentage of initial stress retained at 1000 hours.

High Temperature Bolting Applications

The relaxation of bolt stress under constant strain conditions is widely recognized and has been measured in research on studbolt assemblies. At temperatures in excess of 300°C, special steels and alloys are required to improve upon the stress relaxation performance of low alloy steels. The relaxation behaviors of different bolting materials are shown in Fig. A7.18.

Different nut materials influence the stress-relaxation behavior of the stud, nut assembly.

The recommended nut for each grade of stud is shown in Table A7.17.

High temperature relaxation is a combined effect of gasket creep, bolt creep, and flange rotation. All three or any combination may occur. The symptoms show up as loose bolts that reduce gasket stress, resulting in increased leakage.

FLANGE STRESS ANALYSIS

The most common design standard for flanges is in ASME Section VIII, Appendix 3—"Mandatory Rules for Bolted Flange Connections." This standard applies in the design of flanges subject to hydrostatic end loads and to establish gasket seating.

The maximum allowable stress values for bolting outlined in the ASME code are design values to be used in determining the *minimum* amount of bolting required under the code. A distinction is made in the code between the design value and the bolt stress that may actually exist in the field. The ASME code Appendix S further acknowledges that an initial bolt stress higher than design value may (and, in some cases, must) be developed in the tightening operation. This practice to increase bolt stress higher than the design values is permitted by the code, provided that regard is given to ensure against excessive bolt loads, flange distortion, and gross crushing of the gasket.

General Requirements

Bolt Loads. In the design of the bolted flange connection, the bolt loads are calculated based on two design conditions of operating and gasket seating.

Operating Condition. The operating condition determines the minimum load according to

$$W_{m1} = \frac{3.14}{4} G^2 P_t + 2b\,3.14\,Gm P_t \tag{A7.8}$$

where b, G and P_t are defined previously and m is gasket factor expressed as a multiple of internal pressure

The equation is the sum of the hydrostatic end force plus a residual gasket load equaling a multiple of internal pressure.

Gasket Seating. The second design condition requires a minimum bolt load determined to seat the gasket regardless of internal pressure according to

$$W_{m2} = 3.14\,bGy \tag{A7.9}$$

where y is the minimum seating stress for the gasket selected

PVRC Method. As discussed earlier the PVRC method can be used as an alternate to W_{m1} or W_{m2} in calculating the bolt loads used in the design of the flange.

Total Required Bolt Areas. These design values on bolt loads are used to establish minimum total cross-sectional areas of the bolts A_m. A_m is determined as follows:

$A_{m1} = \dfrac{W_{m1}}{Sb}$, where Sb is allowable bolt stress at operating temperature

$A_{m2} = \dfrac{W_{m2}}{Sa}$, where Sa is allowable bolt stress at atmospheric temperature

Using PVRC bolt loads:

$$A_{mo} = \frac{W_{mo}}{Sa}$$

A_m is greater of A_{m1} or A_{m2} or A_{mo}. Bolts are then selected so that the actual bolt area, A_b, is equal to or greater than A_m.

Example Calculation. Using the same application outlined in the "Gasket Selection" section, the following shows the calculation of bolt loads using m and y factors.

Input Data

Gasket type: Camprofile

$m = 2$

$y = 2500$

ID = 37.63 in

OD = 38.88 in

Design Pressure (P) = 400 psi

Operating Conditions

$$W_{m1} = \frac{3.14}{4} \times 38.32^2 \times 400 + 2 \times .28 \times 3.14 \times 38.32 \times 2 \times 400 = 515{,}225 \text{ lb}$$

Gasket Seating

$$W_{m2} = 3.14 \times .28 \times 38.32 \times 2500 = 84{,}227 \text{ lb}$$

$W_{m1} > W_{m2}$, therefore W_{m1} would govern in the flange design. Note that using the PVRC method, the design bolt load was 645,345 lb, higher than both W_{m1} and W_{m2}. This will be a common occurrence, revealing that higher bolt loads than assumed using m and y factors are required to achieve required leak tightness.

Flange Design. The bolt loads used in the flange design by the code is

$$W = \frac{(A_m + A_b)Sa}{2} \tag{A7.10}$$

Alternately, where additional safety is desired, the code recommends that the bolt load for flange design is actual bolt area (A_b) times the allowable bolt stress (Sa).

For critical flanges, it is suggested that a more conservative approach to flange design be adopted, calculating the design bolt load as actual bolt area (A_b) times expected field bolt stress (Se). The expected field-bolt stress (Se) achieved is often 1.5 × Sa. By using this approach a higher bolt load is determined. This will increase the flange thickness. The benefits to increased flange thickness are

1. Thicker flanges will rotate less and distribute the applied bolt load more uniformly to the gasket.
2. Thicker flanges require longer bolts. Longer bolts have more strain energy and are more forgiving to joint relaxation.

Finite Element Analysis

Finite Element Analysis (FEA) is being used more frequently to review designs of critical flanges. FEA costs are dropping dramatically while the procedure's effectiveness to model complex structure is increasing.

FEA can be used to predict the behavior of the flange structure subjected to its operating conditions. It is possible to predict the behavior of the flange structure mathematically because the behavior of the materials can be described mathematically. Hooke's law describes the mechanical behavior of the metal materials and their elastic response. Other types of stress-strain relationships have been developed to model the nonlinear, plastic behavior of the gasket.

The key is to determine the actual operating stress on the gasket to predict its leak-tightness performance subjected to thermal effects, pressure, bolt stress, relaxation, and flange rotation.

ASSEMBLY CONDITIONS

The flange components consisting of flange, gaskets, and bolts may have been adequately designed but their performance to specifications will be affected by assembly conditions.

Flange Surface Finish

Flange surface finish is critical to achieve the design-sealing potential of the gasket. Again, gasket-leak tightness is dependent upon its operating gasket stress. Flanges that are warped, pitted, rotated, and have incorrect flange gasket-surface finish will impair the leak tightness of the gasket.

Flanges out of parallelism and flatness should be held within ASME B 16.5 specifications. This will ensure that the uniform bolt loads translate to uniform gasket stress.

The resiliency and compressibility of the gasket are affected by flange surface finish. Recommended flange surface finishes for various gasket types are shown in Table A7.18.

TABLE A7.18 Recommended Flange Surface Finish for Various Gasket Types

Gasket type	Flange surface finish microinch CLA	Flange surface finish micrometer Ra
Soft cut sheet gaskets	Material <1.5 mm thick 125–250	Material <1.5 mm thick 3.2–6.3
	Material ≥1.5 mm thick 125–500	Material ≥1.5 mm thick 3.2–12.5
Camprofile	125–250	3.2–6.3
Metal reinforced graphite	125–250	3.2–6.3
Spiral wound	125–250	3.2–6.3
Metal-jacketed gaskets	100 max	2.5 max
Solid metal gaskets	63 max	1.6 max

Gasket Condition

Never reuse a gasket. A gasket's compressibility and resiliency are severely reduced once it has been used.

Check the gasket for any surface defects along the contact faces that may impair sealing.

Keep the gasket on its storage board until immediately prior to assembly.

Do not use any gasket compounds to install the gasket to the flange, as it affects the compressibility, resiliency, and creep behavior of the gasket. Consult the gasket manufacturer when installing large diameter gaskets for a recommendation on how to secure them to the flange during installation.

Bolt Condition

Bolts and nuts may be reused providing they are in new condition. Ensure bolts and nuts are clean, free of rust, and that the nut runs freely on the bolt threads. Install bolts and nuts well lubricated by using a high quality anti-seize lubricant to the stud threads and the nut face.

Methods of Bolt Tightening

Once the total bolt loads (W) are calculated for the flanges, specifications, and procedures should be adopted outlining how to achieve the design bolt load.

The total bolt load (W) for the flange is divided by the number of bolts to determine the individual bolt preload (F_p).

To achieve improved leak tightness sufficient and uniform gasket stress must be realized in the field. This obviously requires uniform and correct applied bolt load. The higher the requirement to reduce leakage, the more controlled the method bolt tightening.

The common methods of bolt tightening are:

- hammer, impact wrenches
- torque wrenches
- hydraulic tensioning systems

Each method has its own assembly efficiency. Bolt tightening methods and their assembly efficiencies are shown in Table A7.19.

Hammer, Impact Wrenches Method

This method remains the most common form of bolt tightening. The advantages are speed and ease of use. Disadvantages include a lack of preload control and the inability to generate sufficient preload on large bolts.

Torque Method

Torque wrenches are often regarded as a means to improve control over bolt preload in comparison with hammer-tightening methods. However, as indicated in Table A7.19, significant variation in stud-to-stud load control is still evident.

TABLE A7.19 Tightening Methods and Assembly Efficiencies

Method to control bolt preload	Tightening method	Stud-to-stud load variation from the mean (%)	Assembly efficiency (e)
No torque/stretch control	Power impact, lever or hammer wrench	> ±50%	0.75
Torque control	Calibrated torque wrench or hydraulic wrench	±30 to ±50%	0.85
Tensioner load control	Multiple stud tensioners	±10 to ±15%	0.95
Direct measurement of stress or strain	Ultrasonic extensometer, calipers, strain gages	±10% or less	1

Much attention is given to the level of torque that should be applied to a specific application. However, it is not the torque that is important but the end result of the torque-bolt preload. Control over bolt preload is the factor for ensuring proper gasket-seating stresses are achieved.

Torque is the measure of the torsion required to turn a nut up the inclined plane of a thread. The efficiency of the nut's turn along the bolt thread to generate preload is dependent upon many factors, including thread pitch, friction between the threads, and friction between the nut face and the flange face.

In general, only about 10 percent of the applied torque goes toward providing bolt preload. The rest is lost in overcoming friction: 50 percent in overcoming the friction between the nut and flange faces, and 40 percent in overcoming friction between the threads of the nut and the bolt.

Another variable to overcome is the elastic behavior of the joint as illustrated in Fig. A7.15.

As the bolts are tightened creating the desired preload, the flange will partially compress. As additional bolts are tightened, the flange joint will compress a little further. The continuous deflection of the flanged joint reduces the stretch (or preload) of previously tightened joints. This phenomenon is referred to as cross talk and is a result of tightening a multistud flange one bolt at a time.

A typical wide variation in bolt and bolt preload is experienced using torquing because of the uncontrolled effects of friction and cross talk, as illustrated in Fig. A7.16, "Typical Load Scatter of 28 Bolt Heat Exchanger Flange."

Torque Calculations. The amount of torque that is required to generate a specific bolt preload is calculated by

$$T = \frac{KDF_p}{12} \text{ ft-lb} \tag{A7.11}$$

where K = nut factor, experimentally determined (see Table A7.20)
D = nominal diameter of stud, in
F_p = desired bolt preload, calculated by dividing total design bolt load (W) by number of bolts

TABLE A7.20 Torque Nut Factors (K)

Bolt and lubricant	Nut factor (K) reported range
As received alloy bolt	0.158–0.267
As received stainless studbolt	0.3
Copper-based antiseize	0.08–0.23
Nickel-based antiseize	0.13–0.27
Moly paste or grease	0.10–0.18

Note: It is important to remember that the K value is an experimentally derived constant. The K value should be verified in the field for each new application.

Example: Torque Calculation. Application: Heat exchanger–Reboiler channel (see Section "Gasket Selection")

Input data:

Type of stud bolt:	ASTM A193, Gr. B7
Number of bolts:	56
Size of bolt:	$(d) = .875$ in
Design bolt load:	$(W_{mo}) = 645{,}345$ lb

Nut factor $(K) = .18$ copper based antiseize lubricant

Calculations:

$$F_p = 645{,}345/56 = 11{,}524 \text{ lb/bolt}$$

$$T = .18 \times .875 \times 11{,}524/12 = 150 \text{ ft-lb}$$

Torque Procedure. Torquing should be applied in multipasses following a cross pattern to reduce warping of flange, crushing the gasket, and to minimize cross talk in achieving bolt preload.

Pass	Torque
1	⅓ of final torque (T). Start at bolt no. 1 and follow cross pattern
2	⅔ of final torque (T) following cross pattern
3	At final torque (T) following cross pattern
4	At final torque (T), start at highest bolt number and tighten in a counterclockwise sequence

The cross pattern is easily followed once the bolts are numbered in the flange. Randomly select a bolt and designate it as bolt number 1. Proceed in a clockwise motion to the next bolt and add four to the previous bolt number. Moving clockwise, the next bolt number would be 1, 5, 9, and so on.

This system of adding four to the previous bolt number continues until adding four to the previous number exceeds the total number of bolts in a flange. At this point, start again at bolt number 3. Continue in the same clockwise direction, numbering bolts 3, 5, 11, and so on until again this number is larger than the total number of bolts in a flange. At this point the next number is 2; continue as previously described: 2, 6, 10, and so on. The last series of bolt numbers start with bolt number 4 and continue 8, 12, 16, and so on.

A sample 16-bolt flange showing a typical cross pattern is shown in Fig. A7.19.

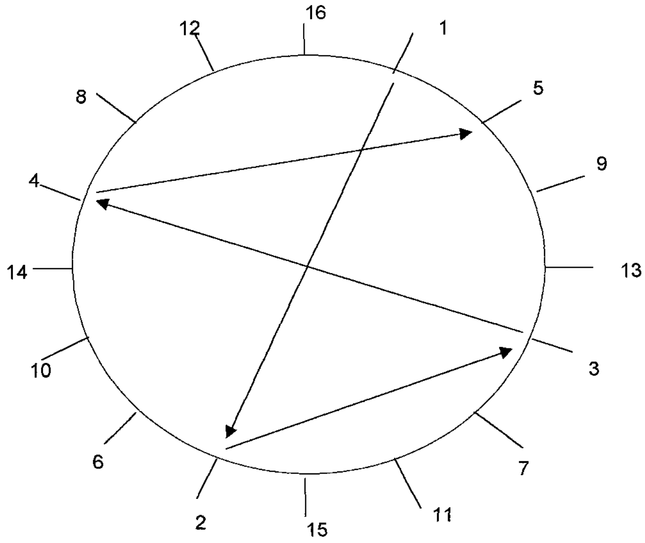

FIGURE A7.19 Typical torquing cross pattern of a 16-bolt flange.

Tensioning Systems

Many of the variables that reduce the control of bolt preload using the torque process are eliminated using hydraulic tensioning systems.

Hydraulic tensioners are hollow hydraulic compact cylinders that are threaded onto a protruding section of the studbolt generally using a pulling device. A bridge supports the hydraulic head straddling the nut and reacting against the flange while hydraulic pressure is applied to the hydraulic head. Under the applied hydraulic load, the bolt stretches at the same time as it compresses the flange and gasket. Residual bolt load equivalent to the desired preload (F_p) is achieved by manually turning down the nut under the tensioner bridge during the applied hydraulic load. Applied bolt load is directly proportional to the hydraulic pressure and the area of the hydraulic cylinder. There are no frictional losses associated with tensioning, as compared to torquing. A cross section of a hydraulic stud tensioner is illustrated in Fig. A7.20. The residual load (preload F_p) = Applied Load − Load Loss Factor.

The load loss factor is dependent upon the stud stress realized, bolt diameter, and effective length of the bolt. For each application its load loss factor can be precisely calculated to determine the necessary applied load to generate the residual preload. Development of thorough procedures is essential to maintain the accuracy of hydraulic stud-tensioning process.

Cross talk is significantly reduced by utilizing multistud tensioning. Generally 50 percent of the studs in a flange are tensioned simultaneously by using multiple

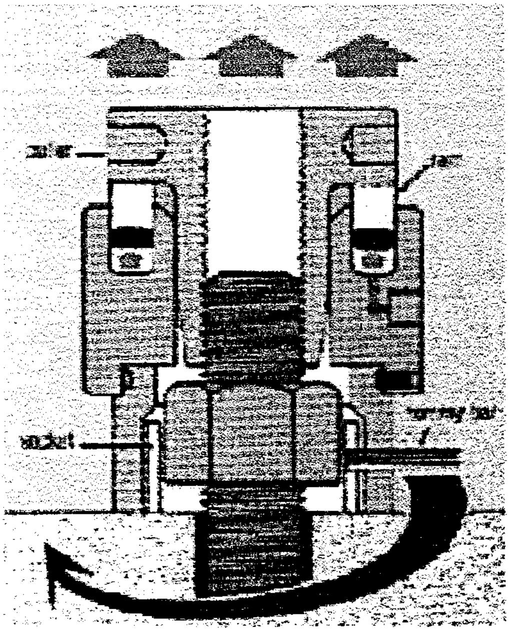

FIGURE A7.20 Hydraulic stud tensioning.

tools interconnected with a high-pressure hose tied into a common pump source. Many flange configurations allow for 100 percent of the studs to be tensioned simultaneously. This completely eliminates cross talk.

Hydraulic tensioning provides the most controlled tightening method for achieving specified bolt preload.

Controlled Bolting

Controlled bolting is the method where the loading-stress of the flange bolts is measured using ultrasonic equipment to ensure that the correctly specified bolt preload is achieved.

The application of torque alone to the flange is not controlled bolting, as there remain many uncertainties about the actual bolt load.

Torquing in combination with ultrasonic measure provides necessary controls to achieve the required bolt preload.

Multistud tensioning following established procedures provides a high degree of control over bolt preload. In critical application, multistud tensioning should also be combined with ultrasonic measurement to verify that all specifications are met.

BOLT LOAD MONITORING

Monitoring of the actual residual bolt load after tightening is essential to ensure that leak-tightness goals are achieved and becomes an important part of the quality assurance process of achieving flange joint integrity.

All tightening methods provide a degree of stud-preload scatter as a function of their process capability. The only way to be sure that specified stud preload is achieved is to measure it.

There are several methods for performing stud-stretch measuring, including strain gauges, bow micrometers, mechanical extensometers, and ultrasonic extensometers. The most common and versatile is the ultrasonic extensometer.

Theory of Operation

The ultrasonic extensometer operates by placing a high-frequency transducer at one end of the stud. Frequencies used for stud measurement range from 1 to 20 megahertz. At these frequencies a liquid couplant (gel) is used to couple the ultrasound from the transducer to the stud.

An ultrasound wave is generated by the transducer and travels down the body length of the stud. The wave reflects off the opposite end of the stud and travels back to the transducer.

The ultrasonic instrument measures the time of flight of the ultrasound in the stud. Many factors, including material density, stud length, temperatures, and stress are used to convert the time-of-flight measurement into an ultrasonic reference length.

Hooke's Law and Stud-Stretch Measurement

All studs elongate in their elastic region following Hooke's law, as outlined in the section "Function of Bolts".

In the relaxed state, a reference length is measured using the ultrasonic extensometer. After the stud has been tightened, an additional reading is made to measure stud stretch. Given the known parameters of effective bolt length (L_b), tensile area of bolt (A_s), Young's modulus of elasticity (E), the preload (F_p) can now be directly correlated to stretch. Rearranging equation A7.1 allows the calculation of bolt preload (F_p):

$$F_p = \frac{\Delta L_b}{L_b} \times E \times A_s$$

The measured residual preload can then be compared to design preload to ensure it falls within an acceptable tolerance. Alternately the stretch reading ΔL_b actual is compared to ΔL_b design.

Example A7.2 Example Calculation: Application: Heat exchange–Reboiler channel

Input data:

$$A_s = .7854\left(.875 - \frac{.9743}{9}\right)^2 = .462\ \text{in}^2$$

Stud size $(D) = 0.875$ in

Thread pitch$(n) = 9$

Material = A193, Gr. B7

Young's modulus $(E) = 30 \times 10^6$ psi

Effective length (L_b) = Grip length $+ 1 \times D$, where grip length equals measured distance between nut faces

Design bolt load $(F_p) = 11{,}524$ lb

Calculation:

$$\Delta L_b = \frac{11{,}524 \times 9.5}{30 \times 10^6 \times .462} = 0.008\ \text{in}$$

Expected tolerance on critical application is ± 10%; therefore, actual ΔL_b should fall between 0.0072 in and .0088 in.

MANAGING FLANGE JOINT INTEGRITY

Leaks are a threat to profits, safety, and the environment. Problems resulting from leaks in flanges can range from local in severity to plant-wide catastrophe. Although the range of negative results can vary widely, leaks have one thing in common: all leaks are preventable.

Leaks don't happen by accident, they happen by design. Rather than being symptoms of product failure, leaks are generally evidence of failure in process control. When you fix the process control, you fix the leaks before they happen.

This chapter has reviewed the key elements to achieving flange joint integrity to assure leak-free integrity of the bolted flange joint. An integrated approach must be adopted to ensure success of the process of joint integrity.

This process begins with an understanding of the operating environment, continues with design and selection of the flange components, setting of assembly specifications, establishment of best-practices procedures, assignment of competent personnel, quality assurance, traceability through complete documentation, and finishes with meeting the goal of leak prevention.

The goal of leak prevention is achievable and starts with a mind-set of doing things right the first time.

CHAPTER A8
PRESTRESSED CONCRETE CYLINDER PIPE (PCCP) AND FITTINGS

Richard E. Deremiah, P.E.
Project Manager
Price Brothers Company
Dayton, Ohio

INTRODUCTION

History

Prestressed concrete cylinder pipe (PCCP) has been manufactured in the United States since 1942. An American Water Works Association (AWWA) tentative standard was developed in 1949 and was made a permanent standard in 1952. Since that time, this standard has been reviewed and updated on a regular basis. PCCP offers the specifier and owner numerous advantages, including ease of installation, custom-designed fittings, superior corrosion resistance, high-flow characteristics, low maintenance costs, and product support by the manufacturer. PCCP is used extensively for a wide range of project types both in the United States and around the world.

There are three other types of concrete pressure pipe: reinforced concrete cylinder pipe (referenced in the AWWA Standard C300[1]), reinforced concrete noncylinder pipe (referenced in the AWWA Standard C302[2]), and pretensioned concrete cylinder pipe (referenced in the AWWA Standard C303[3]).

Terminology and Definitions

Spigot ring—	the protruding end of a PCCP joint which contains a shaped groove to retain the O-ring rubber gasket (refer to Fig. A8.1)

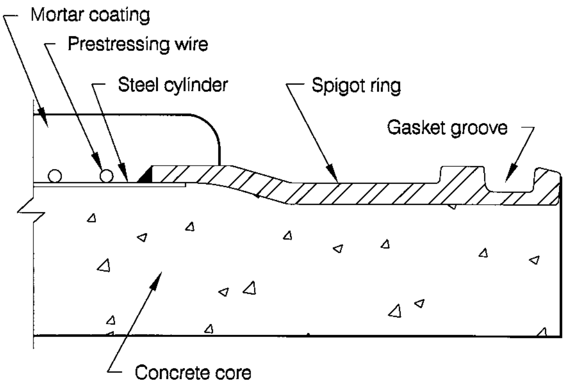
Mortar coating
Prestressing wire
Steel cylinder
Spigot ring
Gasket groove
Concrete core

FIGURE A8.1 Spigot ring.

Bell ring—	the receiving portion of a PCCP joint (refer to Fig. A8.2)
O-ring gasket—	rubber ring of circular cross-section which, when compressed into the spigot-ring groove by the bell ring, provides a water-tight seal
Laying length—	a measure of a pipe or fitting's length along its axis for purposes of advancing the length of a pipeline
Working pressure—	the long-term, steady-state internal pressure
Transient pressure—	the incremental change in internal pressure in a pipeline, which is usually of short duration, that is caused by a relatively sudden change in flow velocity

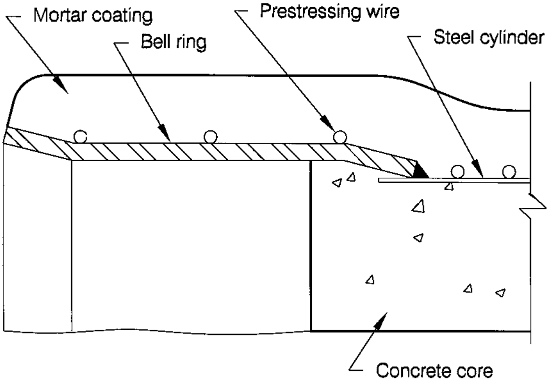
Mortar coating
Bell ring
Prestressing wire
Steel cylinder
Concrete core

FIGURE A8.2 Bell ring.

Field test pressure— an internal pressure applied to a pipeline or portion of a pipeline to test its structural and water-tight performance

External dead load— an applied load to a pipe which is generally constant, such as earth weight, foundation loads, and so on

External live load— an applied load to a pipe which is transient in nature and usually of short duration, such as motor vehicles

Applications for Prestressed Concrete Pressure Pipe

PCCP is the most widely used type of concrete pressure pipe for the transport of water and wastewater in the United States and the world. Uses include raw and potable water transmission lines, water distribution systems, gravity and pressure sewers, power plant cooling systems, industrial process lines, water and wastewater treatment plant process lines, sewer outfalls, raw water intakes, and impoundment-dam spillway conduits. It is a versatile pipe that can be installed in the normal direct-buried condition; as an aerial crossing over canals, rivers, and other obstacles; or subaqueously in both freshwater and seawater.

Reference Standards

Table A8.1 summarizes the standards covering the design and manufacture of PCCP. The AWWA standards in Table A8.1 include reference to other standards published by the American Society for Testing and Materials (ASTM), American Society of Mechanical Engineers (ASME), American Concrete Institute (ACI),

TABLE A8.1 Reference Standards

Title	Purpose
American National Standards Institute/ American Water Works Association C301 Prestressed Concrete Pressure Pipe, Steel-Cylinder Type[4]	Covers the manufacturing process for PCCP, including raw material specifications, manufacturing techniques, and testing procedures.
American National Standards Institute/ American Water Works Association C304 Design of Prestressed Concrete Cylinder Pipe[5]	Covers the design process for PCCP.
American Water Works Association Manual of Water Supply Practices "M9—Concrete Pressure Pipe" [6]	Provides general information regarding the design, manufacturing, and use of PCCP. Also includes information on the other types of concrete pressure pipe: reinforced cylinder pipe, reinforced noncylinder pipe, and pretensioned concrete cylinder pipe.

American Iron and Steel Institute (AISI), American Welding Society (AWS), and American Association of State Highway and Transportation Officials (AASHTO).

DESCRIPTION

Pipe Types

Prestressed concrete cylinder pipe consists of a structural, high-strength concrete core, a steel cylinder with steel joint rings welded at each end providing watertightness, steel prestressing wire, and a portland cement-rich mortar coating. Two

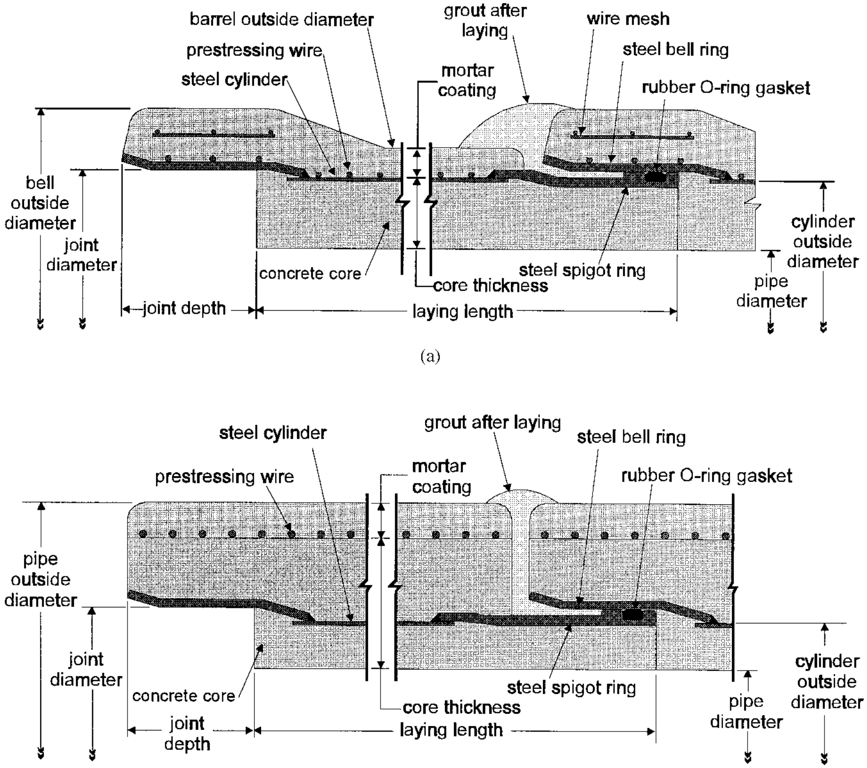
barrel outside diameter
prestressing wire
steel cylinder
grout after laying
mortar coating
wire mesh
steel bell ring
rubber O-ring gasket
bell outside diameter
joint diameter
concrete core
core thickness
steel spigot ring
cylinder outside diameter
pipe diameter
joint depth
laying length
(a)
steel cylinder
prestressing wire
grout after laying
mortar coating
steel bell ring
rubber O-ring gasket
pipe outside diameter
joint diameter
concrete core
joint depth
core thickness
steel spigot ring
laying length
pipe diameter
cylinder outside diameter

(b)

FIGURE A8.3 (a) Lined cylinder pipe (LCP) and (b) embedded cylinder pipe (ECP) profiles.

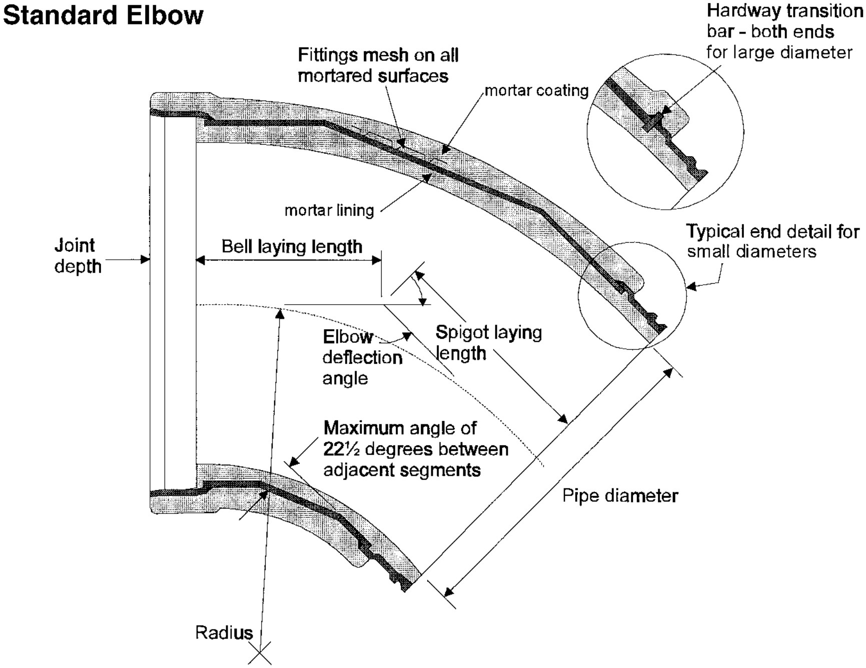
Standard Elbow
Hardway transition bar - both ends for large diameter
Fittings mesh on all mortared surfaces
mortar coating
mortar lining
Joint depth
Bell laying length
Typical end detail for small diameters
Elbow deflection angle
Spigot laying length
Maximum angle of 22½ degrees between adjacent segments
Pipe diameter
Radius

FIGURE A8.4 Typical elbow fitting.

types of PCCP are manufactured: lined cylinder pipe (LCP), which is detailed in Fig. A8.3a and embedded cylinder pipe (ECP), which is detailed in Fig. A8.3b. Lined cylinder pipe has the entire concrete core placed inside the steel cylinder. The cured concrete core and steel cylinder are then helically wrapped with prestressing wire, which is subsequently coated with cement mortar. Embedded cylinder pipe has the concrete core placed both outside and inside the steel cylinder by a vertical casting operation. The cured concrete core and steel cylinder are then helically wrapped with prestressing wire and, as LCP, is coated with cement mortar.

Available Size Ranges

LCP is normally manufactured with inside diameters ranging from NPS 16 (DN 400) through NPS 48 (DN 1200), although larger sizes have been made. ECP is normally manufactured with inside diameters ranging from NPS 54 (DN 1350) through NPS 144 (DN 3600), but diameters smaller and larger than this range are possible. The nominal laying length for pipe up to and including NPS 114 (DN 2850) is usually 20 ft (6 m), and 16 ft (4.9 m) for larger sizes. These diameter ranges and laying lengths can sometimes vary by manufacturer, so the user should check with suppliers on specific sizes. In larger sizes, the laying length can be controlled

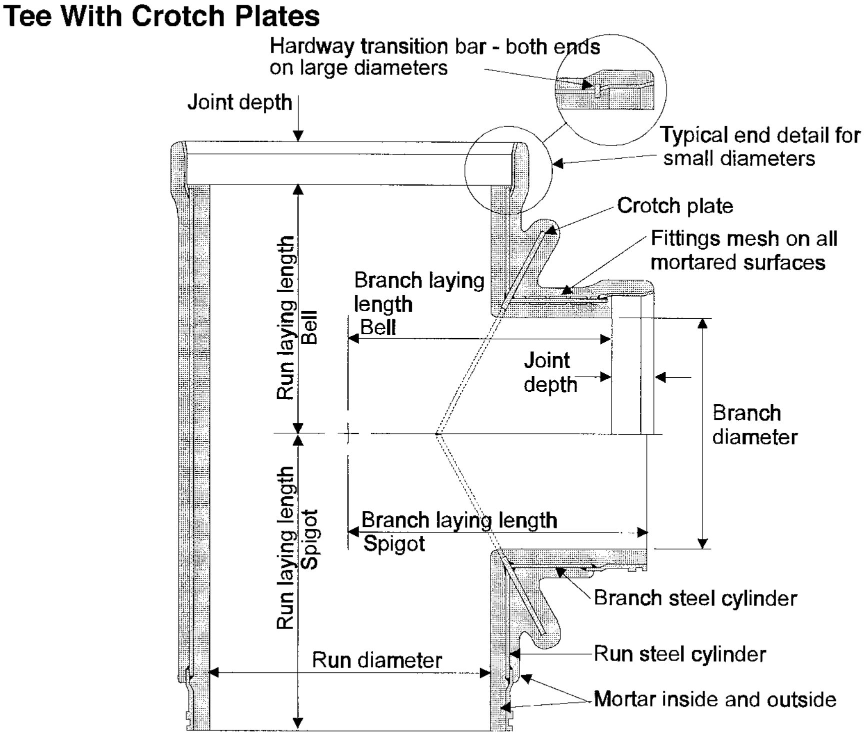
Tee With Crotch Plates
Hardway transition bar - both ends on large diameters
Joint depth
Typical end detail for small diameters
Crotch plate
Fittings mesh on all mortared surfaces
Branch laying length Bell
Run laying length Bell
Joint depth
Branch diameter
Run laying length Spigot
Branch laying length Spigot
Branch steel cylinder
Run steel cylinder
Run diameter
Mortar inside and outside

FIGURE A8.5 Typical tee fitting.

by the weight of the piece and the manufacturer's and installing contractor's ability to handle it.

Fittings and Special Pipe

A wide range of fittings and special pipe lengths are available for all types of project requirements. Fittings are manufactured from steel plate which is cut, rolled, and welded to form the required shape. The completed steel shell is lined and coated with portland cement mortar for corrosion protection. Each fitting is designed for the same external load and internal pressure as the adjoining pipe. Common fittings are elbows, tees, wyes, reducers, wall pieces, and adapters. Adapters are needed for connections to other types of joints such as flanges, mechanical joints, and couplings. Figures A8.4 through A8.7 show the general configurations of elbows, tees, concentric reducers, and flange adapters.

Special pipe consists of prestressed pipe lengths with additional features such as outlets or beveled ends. Prestressed pieces with a laying length shorter than the standard constitute a special pipe that can be supplied to match specific job requirements.

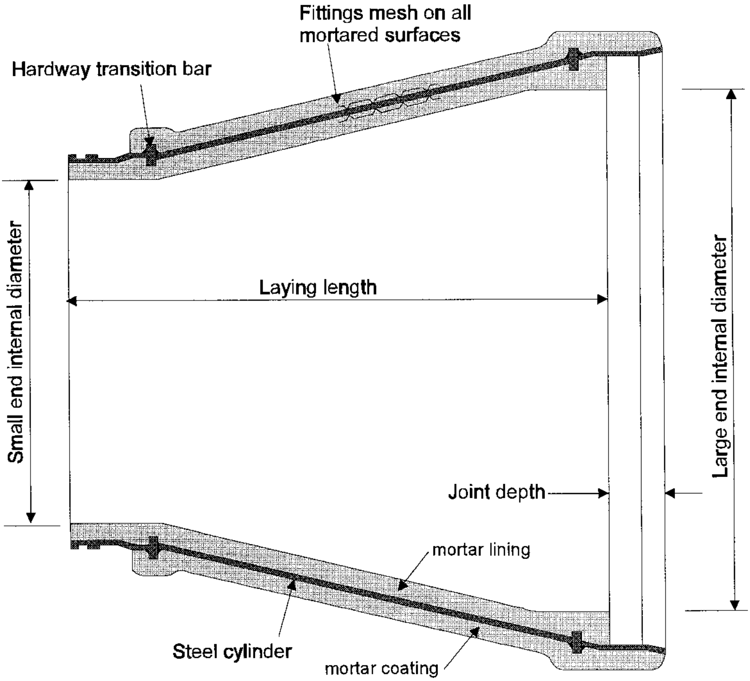
Fittings mesh on all mortared surfaces
Hardway transition bar
Small end internal diameter
Laying length
Large end internal diameter
Joint depth
mortar lining
Steel cylinder
mortar coating

FIGURE A8.6 Typical concentric reducer fitting.

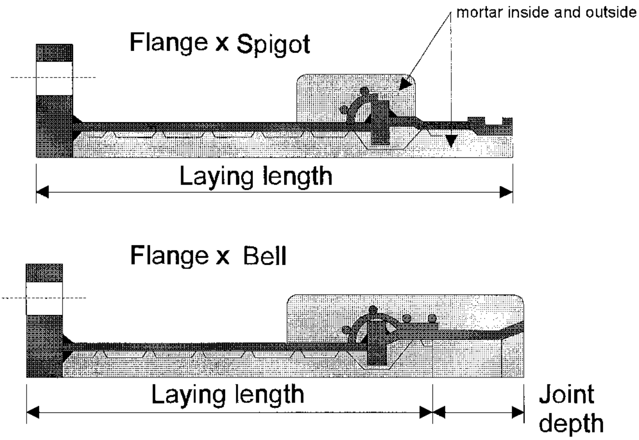
mortar inside and outside
Flange x Spigot
Laying length
Flange x Bell
Laying length
Joint depth

FIGURE A8.7 Typical flange adapters.

DESIGN

Design Parameters

PCCP is designed as a rigid structure to resist the simultaneous application of external loads and internal pressures. External dead loads normally encountered are earth loads, foundation loads, or surcharges applied at the ground surface. External live loads are caused by vehicular traffic, railroads, or construction equipment. The weight of the pipe and the weight of water inside the pipe are also considered in the design procedure. Internal pressures used for design are the working pressure, transient pressure, and the field hydrostatic test pressure. The working pressure should be the expected steady-state internal pressure for the system. The transient pressure is the expected internal pressure over and above the working pressure that can occur during surge (water hammer) conditions. If the purchaser does not include a transient pressure in the specifications, the AWWA C304[5] design standard requires that, as a minimum, the transient pressure allowance be 40 percent of the working pressure, or 40 psi (0.27 MPa), whichever is greater. A postconstruction hydrostatic pressure test is usually conducted to confirm the structural integrity and watertightness of the completed system. In the absence of a field hydrostatic test pressure specified by the purchaser, the AWWA C304 design standard requires the use of a test pressure of 1.2 times the working pressure. Support under the pipe provided by the bedding material must also be used in the design procedure. Various suggested bedding types are shown in the AWWA C304 design standard.

The pipe purchaser's plans and specifications should contain as a minimum the following design parameters for PCCP:

Earth cover over the top of the pipe

Expected live load (normally AASHTO HS20 truck loading configuration)

Internal working pressure

Internal transient pressure allowance

Field hydrostatic test pressure

Bedding type

The pipe and fittings manufacturer will design and manufacture the pipe and fittings to comply with the pressures and loadings specified.

Hydraulics

Energy use in pipeline operation can be greatly reduced during the design stage. Head losses due to pipe wall friction are among the most manageable causes of energy consumption for pipelines which use pumps. These losses can be minimized with the use of pipe which has excellent long-term hydraulic characteristics and by selecting a large enough pipe diameter to avoid high-flow velocities which accelerate energy costs. Energy savings resulting from these design decisions will help reduce operating costs each year throughout the life of the pipeline.

Flow Formulas

Over the years, many empirical flow formulas have been proposed. The Hazen-Williams formula, shown below, was first published by Allen Hazen and Gardner S. Williams in 1905, and continues to be the most widely used for pressure pipe systems.

$$V = 0.550 C_h \left(\frac{h_L}{L}\right)^{0.54} d^{0.632} \quad \text{(A8.1)} \qquad V = 0.3549 C_h \left(\frac{h_L}{L}\right)^{0.54} d^{0.632} \quad \text{(A8.1M)}$$

where V = mean velocity, ft/s
C_h = Hazen-Williams flow coefficient
d = inside pipe diameter, ft
h_L = head loss, ft
L = pipe length, ft

where V = mean velocity, m/s
C_h = Hazen-Williams flow coefficient
d = inside pipe diameter, m
h_L = head loss, m
L = pipe length, m

A statistical analysis of 67 flow tests of concrete pressure lines was made by Swanson and Reed and published in the January 1963 AWWA Journal.[7] Some of this pipe was manufactured as early as 1895. This report presented a "best fit" mean deviation comparison with the well-known formulas by Hazen-Williams, Morris, Moody, and Scobey. The authors concluded that the Hazen-Williams expression for head loss most closely matched the test results for the range of velocities normally encountered in water transmission. The average mean deviation between calculated and observed losses was lowest for the Hazen-Williams formula. A regression analysis least-squares method was used to develop a correlation equation for the Hazen-Williams "C_h" term for concrete pipe, as follows:

$$C_h = 139.3 + 2.028d \quad \text{(A8.2)} \qquad C_h = 139.3 + 6.654d \quad \text{(A8.2M)}$$

where d = inside pipe diameter, ft

where d = inside pipe diameter, m

The Hazen-Williams flow formula can be rewritten in a more convenient form where head loss is expressed in terms of flow velocity.

Head loss in ft:

$$h_L = 3.021 \frac{L}{d^{1.167}} \left(\frac{V}{C_h}\right)^{1.852} \quad \text{(A8.3)}$$

Head loss in m:

$$h_L = 6.8102 \frac{L}{d^{1.167}} \left(\frac{V}{C_h}\right)^{1.852} \quad \text{(A8.3M)}$$

Head Losses Due to Fittings

While head losses due to fittings are generally a minor portion of the overall head loss in a pipeline, they can be important in certain applications such as treatment plants when the length of a line is short and the number of fittings is high. These head losses occur in elbows, reducers, enlargements, valves, and other fittings in the pipeline. The rational method of calculating these losses assumes full turbulence and expresses the loss in terms of velocity head. This expression is

$$h_L = C_L \frac{V^2}{2g} \quad \text{(A8.4)}$$

where h_L = head loss, ft (m)
V = velocity, ft/s (m/s)
C_L = a dimensionless coefficient
g = acceleration due to gravity, 32.2 ft/s^2 (9.81 m/s^2)

Values of "C_L" commonly used for design purposes for a variety of fittings and appurtenances, along with a more comprehensive treatment of hydraulics, are included in the AWWA manual "M9—Concrete Pressure Pipe."[6]

MANUFACTURE

Figure A8.8 illustrates the various steps in the manufacturing process for PCCP.

Figure A8.9 shows the various steps in the manufacturing process for fittings. The AWWA standard C301[4] provides a comprehensive description of the manufacturing requirements for pipe and fittings. The purchaser should require, in the specifications, that all pipe and fittings be manufactured per the AWWA C301 standard.

Quality Assurance

All PCCP manufacturers should establish quality assurance departments within the pipe plant to provide step-by-step attention to all production procedures and assure that all machinery and equipment is operating properly. Incoming raw materials must be carefully inspected and tested for compliance with the governing standards. The AWWA C301 standard contains the testing methods to be used and acceptance criteria for all raw materials to be incorporated into the pipe and fittings.

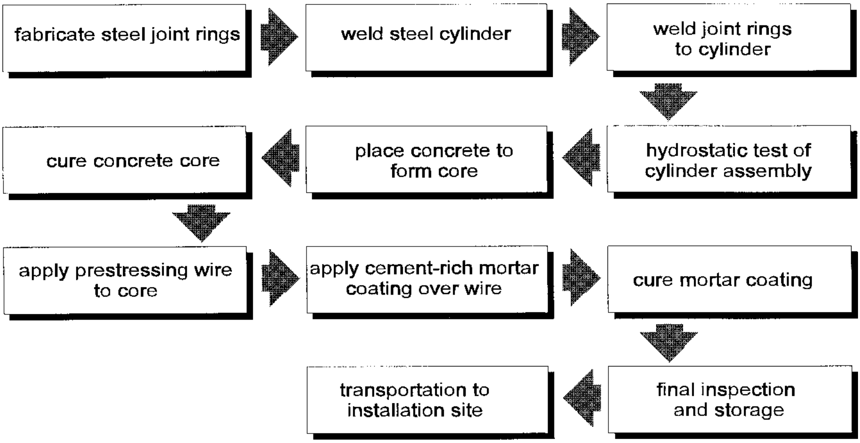
fabricate steel joint rings
weld steel cylinder
weld joint rings to cylinder
hydrostatic test of cylinder assembly
place concrete to form core
cure concrete core
apply prestressing wire to core
apply cement-rich mortar coating over wire
cure mortar coating
final inspection and storage
transportation to installation site

FIGURE A8.8 PCCP manufacturing process.

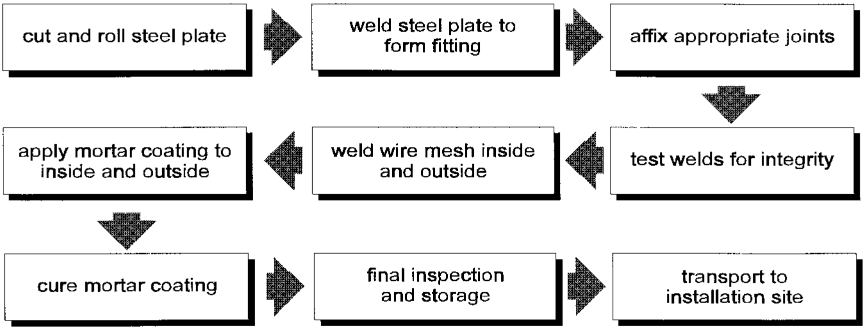
cut and roll steel plate
weld steel plate to form fitting
affix appropriate joints
test welds for integrity
weld wire mesh inside and outside
apply mortar coating to inside and outside
cure mortar coating
final inspection and storage
transport to installation site

FIGURE A8.9 Fittings manufacturing process.

JOINTS

Rubber O-ring Bell and Spigot Joint

Figures A8.3a and A8.3b show a cross-section of the typical LCP and ECP bell and spigot joint. As can be seen, an O-ring rubber gasket is compressed into the spigot groove by the bell ring when assembled to form a water-tight seal. Portland

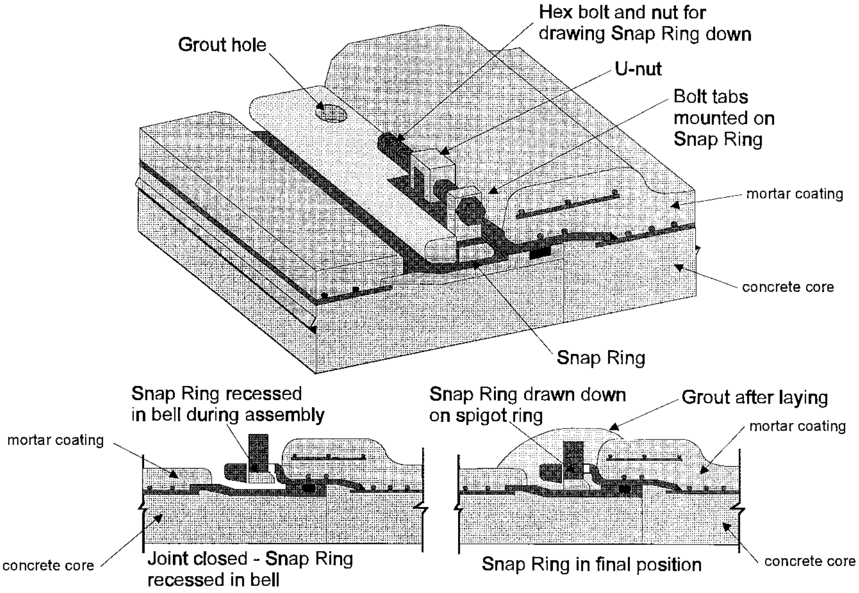
Grout hole
Hex bolt and nut for drawing Snap Ring down
U-nut
Bolt tabs mounted on Snap Ring
mortar coating
concrete core
Snap Ring
Snap Ring recessed in bell during assembly
mortar coating
concrete core
Joint closed - Snap Ring recessed in bell
Snap Ring drawn down on spigot ring
Grout after laying
mortar coating
Snap Ring in final position
concrete core

FIGURE A8.10 Snap Ring® restrained joint.

cement grout is poured into a fabric band (diaper) by the installer to provide corrosion protection.

Restrained Joints

Figure A8.10 depicts a Snap Ring® type restrained joint and Fig. A8.11 a harness clamp type restrained joint. These joints can be used to resist axial tensile forces on the pipe due to unbalanced thrusts caused by internal pressure at fittings such as elbows, tees, and bulkheads. The Snap Ring joint incorporates a split ring which is preassembled in the manufacturing plant so that it is recessed into a groove in the bell ring. After the spigot is pushed home into the bell, the installer tightens a single bolt which draws the split ring down around the shank of the spigot ring. This effectively locks the joint together. The harness clamp joint utilizes a two-part clamp which engages bars on the bell and spigot rings. After the spigot is pushed home into the bell, the installer places the clamp halves over the harness bars, securing them with bolts and nuts. The clamp installed in this manner locks the joint together.

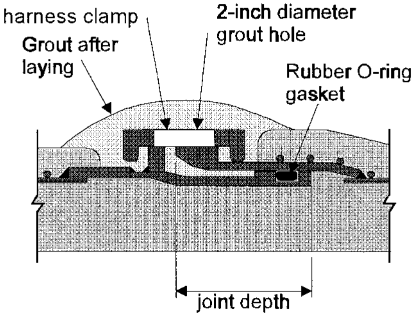
harness clamp
Grout after laying
2-inch diameter grout hole
Rubber O-ring gasket
joint depth

FIGURE A8.11a Lined cylinder pipe harness clamp restrained joint.

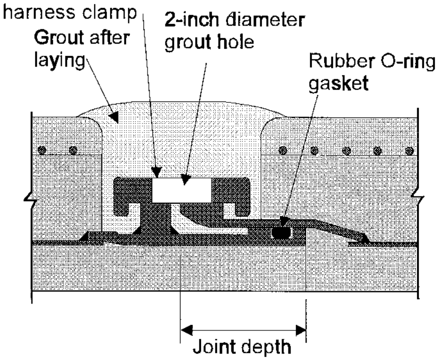
harness clamp
Grout after laying
2-inch diameter grout hole
Rubber O-ring gasket
Joint depth

FIGURE A8.11b Embedded cylinder pipe harness clamp restrained joint.

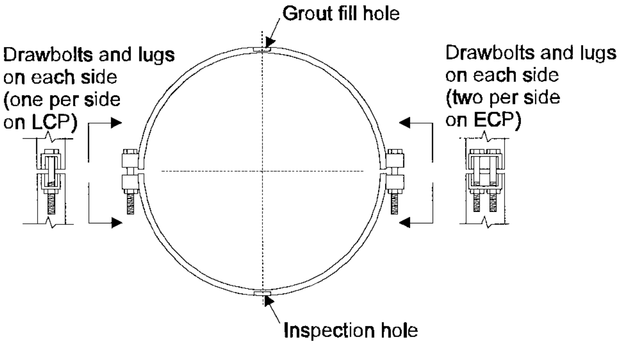
Grout fill hole
Drawbolts and lugs on each side (one per side on LCP)
Drawbolts and lugs on each side (two per side on ECP)
Inspection hole

FIGURE A8.11c Harness clamp.

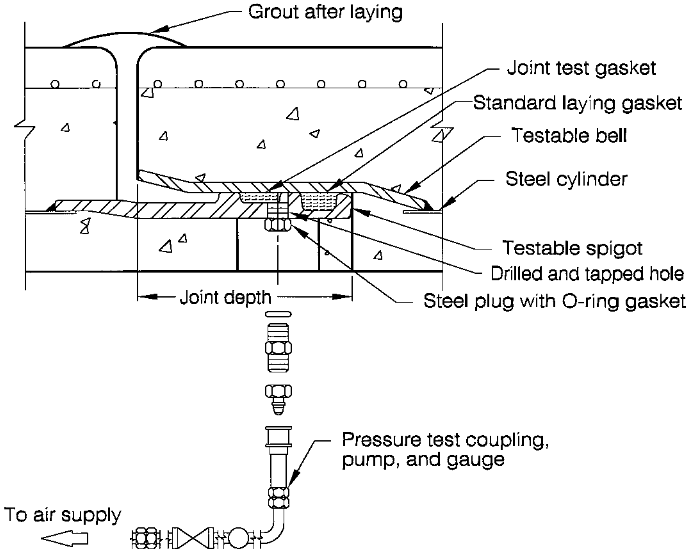
Grout after laying
Joint test gasket
Standard laying gasket
Testable bell
Steel cylinder
Testable spigot
Drilled and tapped hole
Joint depth
Steel plug with O-ring gasket
Pressure test coupling, pump, and gauge
To air supply

FIGURE A8.12 Testable joint.

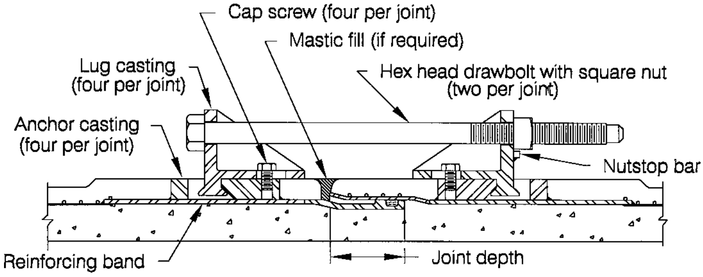
Cap screw (four per joint)
Mastic fill (if required)
Lug casting (four per joint)
Hex head drawbolt with square nut (two per joint)
Anchor casting (four per joint)
Nutstop bar
Reinforcing band
Joint depth

FIGURE A8.13a Lined cylinder pipe.

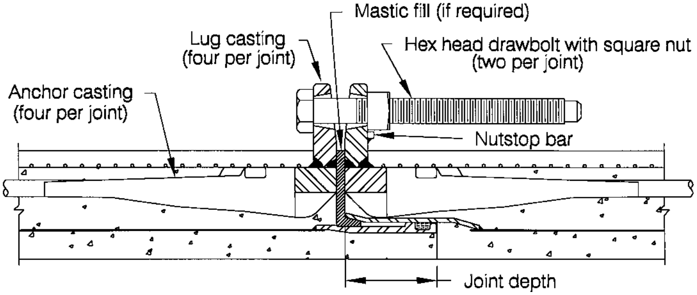
Mastic fill (if required)
Lug casting (four per joint)
Hex head drawbolt with square nut (two per joint)
Anchor casting (four per joint)
Nutstop bar
Joint depth

FIGURE A8.13b Embedded cylinder pipe.

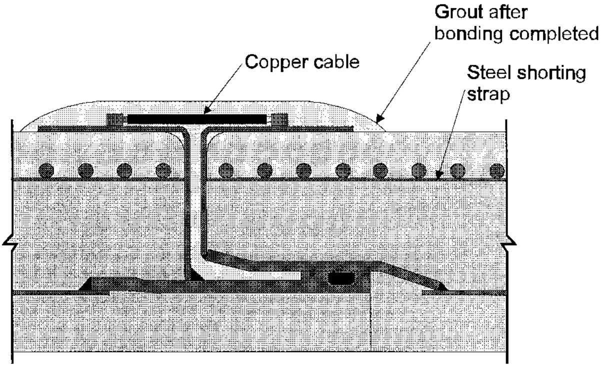
Grout after bonding completed
Copper cable
Steel shorting strap

(a) Embedded Cylinder Pipe

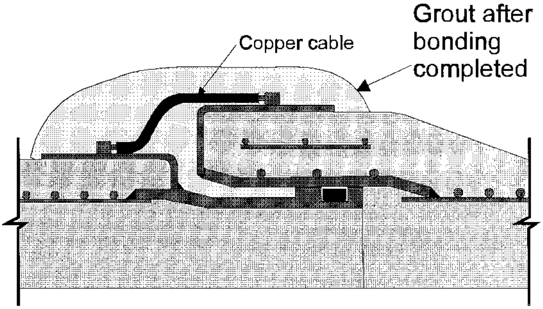
Grout after bonding completed
Copper cable

(b) Lined Cylinder Pipe

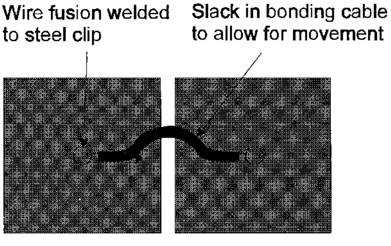
Wire fusion welded to steel clip
Slack in bonding cable to allow for movement

(c) Steel Clips Welded to Joint Rings

FIGURE A8.14 Bonded joint. Exothermic fusion welded copper cable method.

Testable Joints

Figure A8.12 shows a joint configuration which allows for testing the joint seal without the need to fill the pipeline with water. These joints are normally used when pipe is installed in a manner that necessitates immediate verification of the gasket seal. This feature is sometimes necessary for certain pipelines in power, industrial, water, and wastewater plants; for pipe in tunnel casings; and for subaqueous pipelines. This can be an effective tool for finding a problem with a joint seal at the time it can most easily be corrected. Testable joints are normally available in diameters NPS 54 (DN 1350) and larger. However, some manufacturers may be able to supply them in smaller diameters. Testable joints should not be considered a replacement for postconstruction hydrostatic pressure tests since they do not confirm the overall system integrity (restrained joints or concrete thrust blocks) and watertightness of connecting appurtenances such as valves and access manholes.

Other types of special joints available for PCCP include subaqueous joints and bonded joints. Subaqueous joints, depicted in Figs. A8.13a and A8.13b, are designed to facilitate jointing underwater by divers. They normally incorporate external lug and drawbolt assemblies. Bonded joints, shown in Figs. A8.14a, A8.14b, and A8.14c, are designed to provide electrical continuity across the joint for the future monitoring of electrical activity on the pipeline or for the application of cathodic protection.

INSTALLATION

Pipe Handling and Storage

A crane or backhoe outfitted with a steel cable sling may be used to unload pipe unless the pipe has a special exterior coating that could be damaged by a steel cable sling. In such cases, a fabric sling should be used. Multiple slings are often used in handling large pipe and fittings. Pipe can be stored directly on the ground in nonfreezing conditions. If freezing conditions are expected, the pipe should be set on wooden timbers off the ground to prevent the pipe from becoming frozen to the ground. Rubber gaskets should be stored in a cool place, out of the sun, away from fuel oil, gasoline, electric motors, and any other environment that can damage rubber.

Excavation and Bedding Preparation

In most cases, the trench is excavated to be long enough for one section of pipe. The trench should be wide enough to allow installing personnel adequate room to work at the sides of the pipe. Pipe should not be laid directly on rocks or other unyielding foundation. Refer to the AWWA C304 standard for the bedding and backfill requirements for PCCP.

Jointing

Just prior to jointing, the steel joint rings should be carefully cleaned and the rubber gasket and contact surfaces of the joint rings lubricated. Only lubricant recommended by the pipe manufacturer should be used. Once the joint ends are properly prepared and the rubber gasket is in place on the spigot, the ends are aligned so the spigot will enter the bell squarely. Then the spigot is pushed home with a smooth, continuous motion. The position of the gasket is then checked in the manner recommended by the pipe manufacturer. A fabric band is secured around the exterior joint recess to receive the portland cement grout for corrosion protection.

Backfilling

After the joint has been assembled and the exterior joint recess has been grouted, the pipe can be backfilled to grade. In general, the requirements for backfilling rigid PCCP will not be as critical as for flexible types of pipe such as steel, plastic, and ductile iron. The backfill in contact with the pipe should not contain large rocks, clods, or excessive organic material.

Field Hydrostatic Testing

In most situations, a post-construction hydrostatic pressure test of the completed pipeline is required before final acceptance by the owner. For very long lines, it may be convenient to test shorter sections as they are completed rather than wait and test the entire project at one time. This test can verify the overall system integrity such as the restrained joints or thrust blocks and the watertightness of the connecting appurtenances such as valves, access manholes, and outlets.

Repair

Occasionally, damage may occur in the field due to impacts from construction equipment or other objects. Minor damage can usually be repaired in the field by qualified personnel. Major damage may require shipment of the piece back to the manufacturing plant for repair or replacement. Before attempting any repairs in the field, the pipe manufacturer should be consulted for specific recommendations and assistance.

Special Installation Situations

During the design phase of some projects, areas of unstable soil conditions and crossings of small rivers, streams, or canals should be identified. In these cases, a pier support arrangement for the pipe may be needed. The pipe for this application must be designed and manufactured to span the supports and to resist the concentrated load applied to the pipe at the support.

PCCP to be placed underwater such as for intakes, outfalls, or lake and river crossings may require special consideration for joining pipe underwater by divers. PCCP to be used for subaqueous lines may have modifications made to the joints to allow for joint engaging assemblies such as drawbolts, or special devices may be used which create a vacuum force to pull the joint home while the pipe's weight is supported by a barge-mounted crane. In either case, it may be advantageous to use longer pipe lengths in order to minimize the number of underwater joint assemblies.

The concrete and mortar linings and coatings specified in the AWWA C301 standard provide ample corrosion protection in most buried environments. There are, however, certain conditions where the ability of the concrete and mortar to provide a passivating environment around the embedded steel may need to be supplemented. Additional protective measures may be needed in these instances. These conditions include

- High chloride environment
- Stray current interference

- High sulfate environments
- Severe acid conditions
- Aggressive carbon dioxide
- Atmospheric exposure
- Connections to other pipelines

Refer to the AWWA manual "M9—Concrete Pressure Pipe"[6] for further information on the identification and evaluation of these conditions. The pipe manufacturer should also be consulted for specific recommendations and availability of supplemental protective measures.

Tapping Prestressed Concrete Cylinder Pipe

Outlets, tees, and wyes can be built into the pipe when their need is identified at the time the project is designed. When unforeseen circumstances occur that require outlets, connections, or branch lines on already installed pipe, tapping of PCCP can be done.

Tapping PCCP for connecting outlets after a pipeline is installed is a common occurrence on most public works projects. Taps can easily be made on PCCP. In

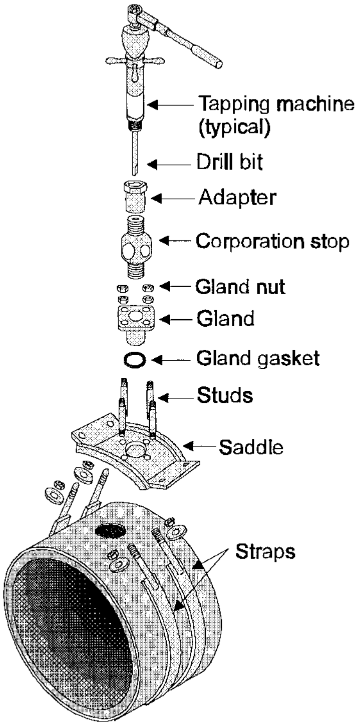

After the tap is installed, all metal parts must be encased in a 1:3 concrete or mortar mix with a minimum cover of 1 inch.

FIGURE A8.15 Strap-type tapping saddle assembly.

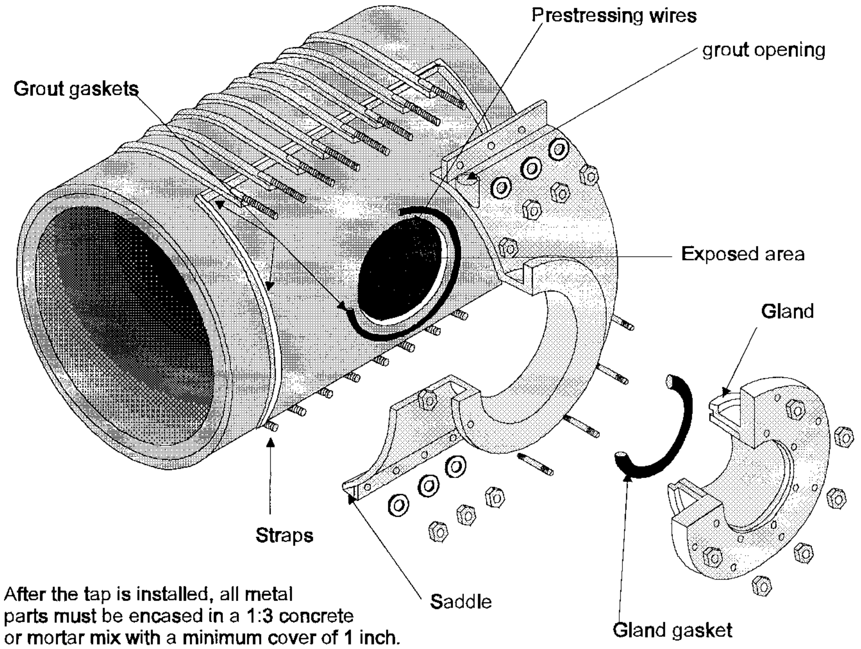

After the tap is installed, all metal parts must be encased in a 1:3 concrete or mortar mix with a minimum cover of 1 inch.

FIGURE A8.16 Flange-type tapping saddle assembly.

most cases, the tap can be done under pressure without interrupting service to customers. Tap diameters commonly range from NPS ¾ (DN 20) up to one size smaller than the pipe being tapped. For full size branch connections, a cut-in tee arrangement or a line stopping process may be feasible. The tapping saddle assembly used must be properly designed to work with PCCP. Figure A8.15 shows a strap-type tapping saddle assembly, and Fig. A8.16 shows a larger flange-type tapping saddle assembly. The strap-type saddle is normally used for tap diameters NPS ¾ (DN 20) to NPS 2 (DN 50). The flange-type saddle is used for tap diameters NPS 3 (DN 80) and larger. Consult the pipe manufacturer for additional information on tapping saddle assemblies and services provided.

BIBLIOGRAPHY

1. American Water Works Association, Standard for Reinforced Concrete Pressure Pipe, Steel-Cylinder Type, ANSI/AWWA C300-97.
2. American Water Works Association, Standard for Reinforced Concrete Pressure Pipe, Noncylinder Type, ANSI/AWWA C302-95.
3. American Water Works Association, Standard for Concrete Pressure Pipe, Bar-Wrapped, Steel-Cylinder Type, ANSI/AWWA C303-95.
4. American Water Works Association, Standard for Prestressed Concrete Pressure Pipe, Steel-Cylinder Type, for Water and Other Liquids, ANSI/AWWA C304-92.

5. American Water Works Association, Standard for Design of Prestressed Concrete Cylinder Pipe, ANSI/AWWA C301-92.
6. American Water Works Association, *Manual of Water Supply Practices M9—Concrete Pressure Pipe*, 2d ed. 1995.
7. Swanson, H.V., and Reed, M.S. ‘‘Comparison of Flow Formulas and Friction Factors for Concrete Pressure Pipe,’’ *Journal of the American Water Works Association*, January 1963, 67–80.

CHAPTER A9

GROOVED AND PRESSFIT PIPING SYSTEMS

Louis E. Hayden, Jr.
Divisional Operations Manager
Victaulic Company of America
Easton, Pennsylvania

The use of mechanical joints in the design and construction of piping systems is rapidly becoming a general practice. This chapter discusses two types of mechanical pipe joints. The first is a mechanically pressed joint called Pressfit®* that is designed to join light-wall carbon steel and stainless steel pipe. The second joint is generically termed a grooved joint. This type of joint is designed for joining any type of pipe, metallic or nonmetallic, that is capable of being cut or roll grooved.

Both types of joints rely on a mechanical interlock with the pipe end for pressure and structural integrity and an elastomeric gasket for the pressure boundary seal.

PRESSFIT®

Introduction

The Pressfit piping system is an innovative, rigid, self-restrained mechanical joining method for schedule 5 or lighter weight lightweight stainless steel and carbon steel pipe. This proprietary mechanical pipe joint is designed for use in small-bore piping systems, NPS ½ (DN15) to NPS 2 (DN50). The Pressfit system may be applied to any service that is compatible with the piping materials, the gasket material, and the temperature range of the system, unless prohibited by the manufacturer's instructions. Typical applications would include building-services piping, potable water, fire protection, heating and cooling, industrial processes, process cooling and heating systems, plant utilities, and vacuum systems.

Joint Concept

The Pressfit joining system concept is illustrated in Fig. A9.1 The left side of Fig. A9.1 shows the pipe fully inserted into the Pressfit fitting in the "unpressed" condi-

---

* Pressfit® is a registered trademark of Victaulic Company of America.

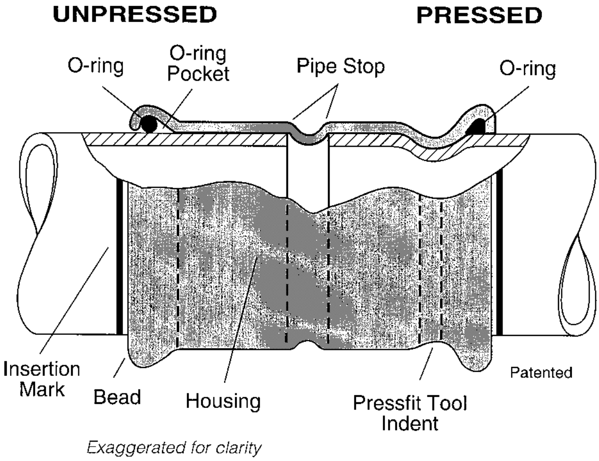

FIGURE A9.1 Pressfit joint.

tion. The right side of Fig. A9.1 shows a cross-sectional view of the Pressfit joint in the "pressed" condition. Note that the pressing operation indents the Pressfit fitting and pipe, thus providing the mechanical restraint required to resist pressure and external loads that try to separate the pipe. The O-ring seal has also been compressed to provide the pressure-boundary seal of the joint. Additionally, the final pressed shape of the Pressfit joint provides resistance to torsional movement.

Industry Specification, Codes and Product Testing

Pressfit fittings and pipe meet the requirements of the following specifications, codes, and standards:

- Pressfit carbon steel products meet the requirements of ASTM A53 Grade A and A135 Grade A. Pressfit stainless steel products meet the requirements of ASTM A312 Grade 316/316L and ASTM A269 Grade 304/304L.
- Pressfit products meet the requirements for use in piping systems designed to comply with ASME B31.1, B31.3 and B31.9 piping codes. Pressfit products are qualified for use in these systems by the following paragraphs:

  ASME B31.1, Power Piping, Paragraphs 104.1.2, 104.7(c), and 118

  ASME B31.3, Process Piping, Paragraphs 304.1, 304.7.2(a), and 304.7.2

  ASME B31.9, Building Services Piping, Paragraphs 904.7, 904.7.2, and 913
- Codes and standards that have approved or listed Pressfit products are

  Underwriters' Laboratories—UL Listed

  Underwriters' Laboratories Canada—ULC Listed

  Factory Mutual—FM Approval

  Southern Building Code Congress International, Public Safety Testing, Evaluation Service Inc.—SBCCI, PST, and ESI Report No. 9535

International Conference of Building Official and Uniform Mechanical Code—UMC, ICBO-ES Report No. 5079

Building Officials and Code Administrators—BOCA Evaluation Services Inc. Listed Report No. 93–3 Cat. 22 and Cat. 15

National Fire Protection Association—NFPA 13

Underwriters' Laboratories—ANSI/NSF-61 listed for stainless steel potable water service

System Pressure and Temperature Rating

The Pressfit pipe joining system, when installed in accordance with the manufacturer's instructions, is rated as follows:

- Pressfit joints are rated for 300 psi (2065 kPa) when used in general service or process systems.
- Pressfit joints are rated for 175 psi (1200 kPa) for all fire protection services.
- The maximum and minimum continuous service temperatures for Pressfit joints are defined by the selection of the O-ring seal which is compatible with the system fluid. Thermal service conditions are shown in Table A9.1 A comparison of the maximum allowable design pressure of the Pressfit joint to an ASME Class 150 joint over the temperature range from ambient to the maximum continuous service temperature of the Pressfit joint is shown in Figs. A9.2, A9.3 and A9.4.

Joint Installation

Pressfit pipe fittings are designed to be installed on square cut, plain-end pipe. No special pipe-end preparations are needed. Pressfit joints are made using generally accepted pipe fitting techniques with the addition of the following requirements:

- Each pipe end must be marked by measuring back from the end to establish an insertion or witness mark. This mark should be highly visible and extend for at least 180° of the pipe circumference. The insertion depth should be measured and marked as shown in Table A9.2.
- The marked pipe end should be fully inserted into the Pressfit fitting completely to the pipe stop. The insertion or witness mark should be adjacent to the end of

TABLE A9.1

Elastomer	Minimum temperature	Maximum temperature
EPDM (Grade "E")*	−30°F/−34°C	+230°F/+110°C
Nitrile (Grade "T")*	−20°F/−29°C	+180°F/+82°C
Fluoroelastomer (Grade "O")*	−20°F/−7°C	+300°F/+149°C

* Grade designations "E," "T," and "O" are commercial designations assigned by Victaulic Company of America for product identification purposes only.

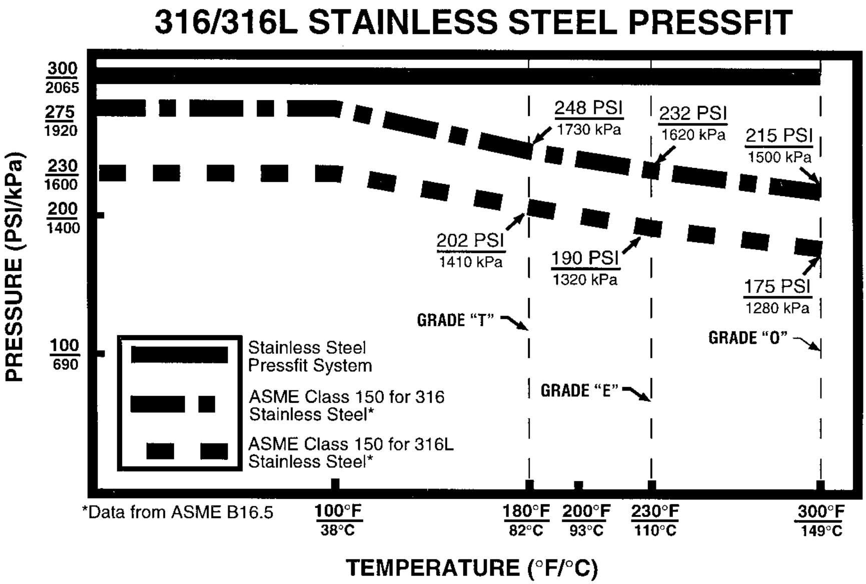

FIGURE A9.2

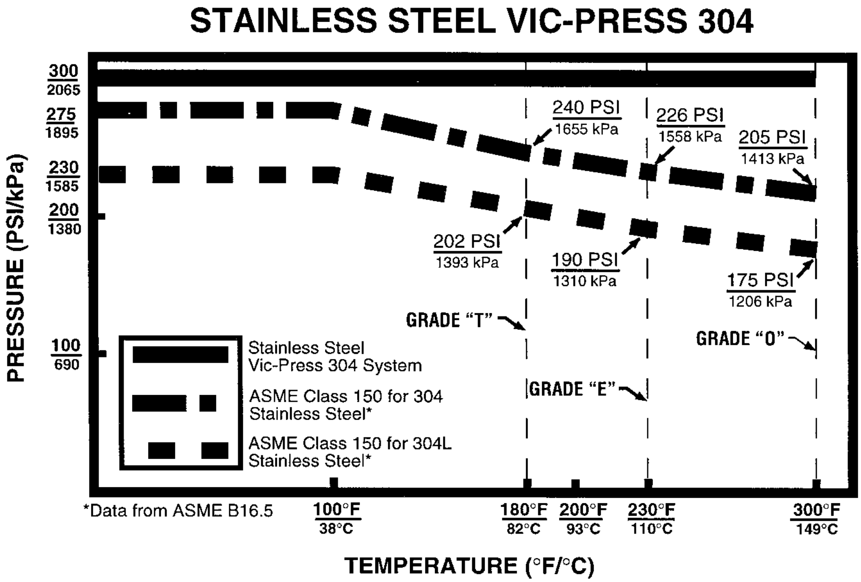

FIGURE A9.3

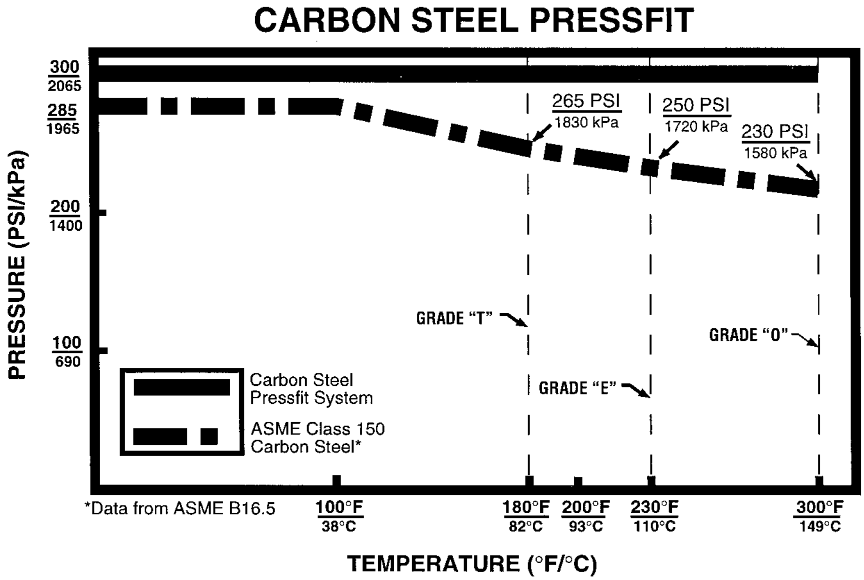

FIGURE A9.4

the Pressfit fitting. The Pressfit pipe fitting should be squared to the pipe and pressed onto the pipe using the proper pressing jaw and Pressfit tool.

System Installation

As with all piping systems, a Pressfit system must be properly installed to provide the system performance envisioned by the piping designer. At minimum, the following installation requirements should be considered:

- *System Support:* Like all other piping systems, pipe joined with Pressfit joints requires support to carry the weight of the piping system, system fluid, and other system equipment. As in other methods of joining pipes, the support or hanging method must be adequate to eliminate undue stresses on joints, piping, and other

TABLE A9.2

Pressfit insertion mark depth—In (mm)						
Size	NPS ½ DN 15	NPS ¾ DN 20	NPS 1 DN 25	NPS 1¼ DN 32	NPS 1½ DN 40	NPS 2 DN 50
Depth	⅞ (22)	1 (25)	1 (25)	1¼ (32)	1½ (40)	1⅞ (48)

TABLE A9.3

Nominal pipe size	Suggested maximum span between supports—approved Pressfit pipe ft (m)				
	Water service			Gas/air service	
	UL/ULC/FM*	B31.1	B31.9	B31.1	B31.9
NPS ¾ DN 20	— —	7 (2.1)	8 (2.4)	9 (2.7)	8 (2.4)
NPS 1 DN 25	12 (3.7)	7 (2.1)	9 (2.7)	9 (2.7)	9 (2.7)
NPS 1¼ DN 32	12 (3.7)	7 (2.1)	11 (3.4)	9 (2.7)	11 (3.4)
NPS 1½ DN 40	12 (3.7)	7 (2.1)	12 (3.7)	9 (2.7)	13 (4.0)
NPS 2 DN 50	12 (3.7)	10 (3.1)	13 (4.0)	13 (4.0)	15 (4.6)

* Carbon steel only

system components. The suggested maximum span between supports for Pressfit piping systems is shown in Table A9.3.

- *Thermal Expansion and Contraction:* As with all rigid piping systems, piping installed utilizing Pressfit joints must be reviewed by the piping designer to assure proper allowances are incorporated into the piping system design to eliminate undue stresses from thermal expansion or contraction. The use of flexible mechanical coupling-type expansion joints is highly recommended for this service. If installation of flexible mechanical joints is not possible or desired, the designer is encouraged to use single-leg (Z-shaped) or dual-leg (U-shaped) expansion compensation loops as shown in Figs. A9.5 and A9.6 For calculated piping movement, Δl, the minimum expansion compensate leg length L may be determined by using Figs. A9.7 and A9.8 As a result of thermal expansion and contraction of pipe, Pressfit joints may be subjected to torsional or rotational movement. Rotational angles must be limited to a maximum of 5°.

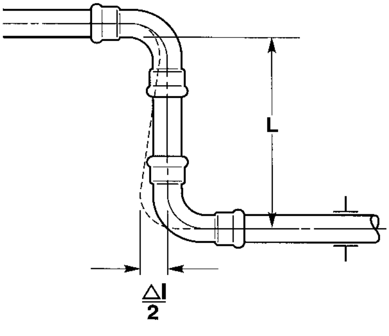

FIGURE A9.5 Z-shaped expansion compensator.

Advantages of Pressfit

The Pressfit pipe joint was conceived to provide a fast, clean, and cool method of installing lightweight carbon and stainless steel piping systems. Advantages provided by using Pressfit are listed as follows:

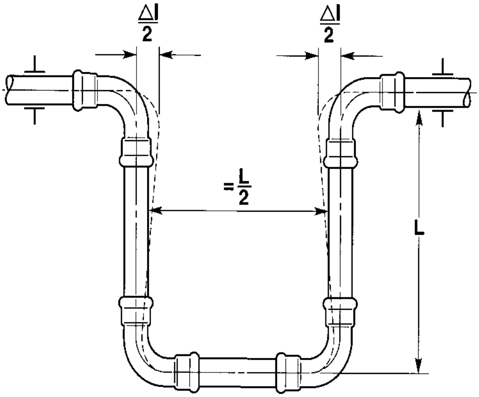

FIGURE A9.6 U-shaped expansion compensator pipe with fittings.

- The Pressfit piping system, with its lower weight, lack of required pipe-end preparation, along with ease and speed of pressing joints, will provide a lower final cost installation to the contractor and owner than the same size carbon or stainless steel system installed by threading, flanging, or welding.
- Due to the design of the Pressfit fitting, piping designers can take advantage of the full-rated pressure capability of the Pressfit fitting across the allowed temperature range of the selected O-ring material. Pressure derating with an increase in metal temperature is not a factor in Pressfit systems as compared to a flanged system. Refer to Figs. A9.2, A9.3, and A9.4 for comparison.
- Pipe used in piping systems utilizing Pressfit joints has thinner nominal wall thickness than Schedule 40 pipe used in most applications where Pressfit should

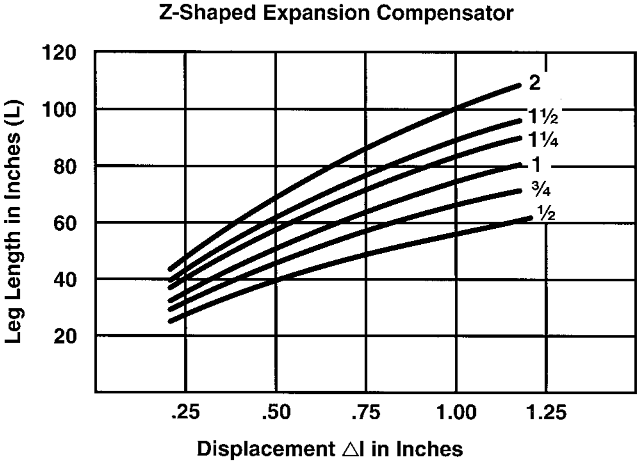

FIGURE A9.7

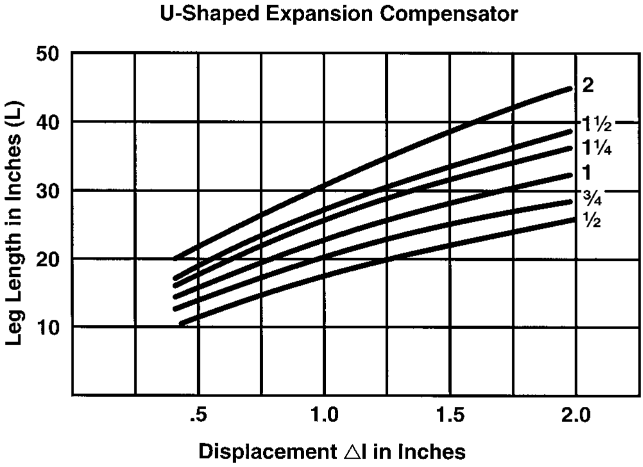

FIGURE A9.8

be considered. This difference results in significant increases of flow area and less pressure drop in Pressfit piping systems, compared to systems designed utilizing Schedule 40 pipe. A tabulation of these factors is shown in Tables A9.4 and A9.5.

- When considering carbon steel Pressfit and Schedule 40 piping from an internal corrosion perspective, the Pressfit system provides adequate performance when used in closed-loop service where water treatment is maintained or introduction of oxygen into the system is limited to periodic testing or system makeup. In Table A9.6 and Fig. A9.9, the corrosion resistance ratio (CRR) of Schedule 5 and Schedule 40 carbon-steel Pressfit pipe are compared. The corrosion resistance ratio (CRR) is a method, established by Underwriters' Laboratories in 1970, by which to compare the effective wall thicknesses for various pipes. The effective

TABLE A9.4 Friction Loss

		Friction loss (psi per ft) C = 120				
	Flow rate (GPM)		Schedule 10		Schedule 40	
NPS (DN)		Schedule 5	psi	Higher	psi	Higher
½ (15)	15	0.500	0.643	22%	0.951	90%
¾ (20)	25	0.3713	0.4510	21%	0.6351	71%
1 (25)	40	0.2584	0.3773	46%	0.4691	82%
1¼ (32)	100	0.4062	0.5426	34%	0.6721	66%
1½ (40)	120	0.2800	0.3592	28%	0.4445	59%
2 (50)	150	0.1330	0.1616	22%	0.1989	50%

TABLE A9.5 Flow Area

	Available flow area (sq in)				
		Schedule 10		Schedule 40	
NPS (DN)	Schedule 5	Flow area	Less	Flow area	Less
½ (15)	0.396	0.357	10%	0.304	23%
¾ (20)	0.655	0.614	8%	0.533	20%
1 (25)	1.103	0.945	14%	0.864	22%
1¼ (32)	1.839	1.633	11%	1.496	19%
1½ (40)	2.461	2.222	10%	2.036	17%
2 (50)	3.960	3.650	8%	3.360	15%

wall thickness is the minimum thickness remaining at any point within a system which has exposure to both internal and external corrosion. For Schedule 5 pipe, the effective wall thickness is the minimum allowed by the applicable ASTM standard and for threaded Schedule 40, it is the minimum remaining thickness under the first exposed thread. Threaded Schedule 40 is used as the baseline and has a CRR of 1. Piping with a CRR greater than 1 will have an effective wall thickness greater than threaded Schedule 40. As can be seen in the table above, Schedule 5 Pressfit pipe has an effective wall thickness greater than threaded Schedule 40 in sizes up through NPS 1½ (DN 40). This is normally adequate to assure long system life.

TABLE A9.6

Nominal size pipe NPS (DN)	Corrosion resistance ratio carbon-steel pipe	
	Schedule 5 Pressfit	Schedule 40 threaded
¾ (20)	3.38	1.00
1 (25)	2.17	1.00
1¼ (32)	1.40	1.00
1½ (40)	1.11	1.00
2 (50)	0.90	1.00

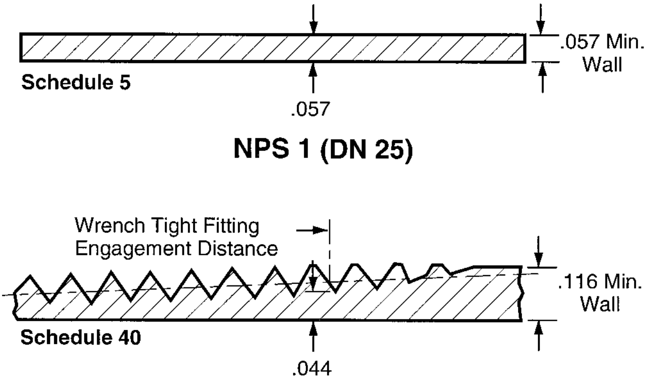

FIGURE A9.9

GROOVED MECHANICAL PIPE JOINTS

Introduction

The grooved piping method for mechanically joining pipe is recognized as the fast, easy, economical, and reliable method of joining pipe for many services. With over 70 years of service experience, the grooved piping method is now accepted along with the pipe joining methods, such as welding, flanging, and threading.

The grooved system provides a self-restrained pipe connection which can withstand the full-pressure thrust loads at the maximum-rated working pressure of the coupling. Easy assembly also allows easy disassembly. This, in combination with a union at every joint, permits easy system access for maintenance, repair, component replacement, and retrofits. Also, fittings can be loosely assembled and rotated to line up with mating components before the couplings are tightened. This eases work in tight places and around existing pipe, structures, or equipment. Features such as easy assembly, system access, and installation in confined spaces are not available with other joining methods.

Reference Codes, Standards, and Specifications

Grooved joints consist of grooved pipe ends and grooved pipe couplings. The pipes themselves may meet many various industry specifications. The pipe ends and couplings meet the requirements of the following:

Pipe Grooves—ANSI/AWWA C606–87 Grooved and Shouldered Joints

Pipe Couplings—ASTM F1476–93 Standard Specification for Performance of Gasketed Mechanical Couplings for use in Piping Applications

Grooved couplings may meet the requirements or be listed by the following codes or agencies. The designer should check with the coupling manufacturer to verify compliance or listing:

American Bureau of Shipping (ABS)
American National Standards Institute (ANSI)

American Petroleum Institute (API)—API Std. 5L Sect. 7.5

American Society of Heating, Refrigerating and Air Conditioning Engineers (ASHRAE)

American Society of Mechanical Engineers (ASME) Pressure Piping Code, B31; B31.1, Power Piping; B31.3, Process Piping; B31.5, Refrigeration Piping; B31.9, Building Services Piping; B31.11, Slurry Pipelines

Building Officials and Code Administrators (BOCA)

Canadian Standards Association—B242 (CSA)

Factory Mutual Research Corp. (FM)—Approved for fire protection services

International Association of Plumbing & Mechanical Officials (IAPMO)

National Fire Protection Association (NFPA)

New York Materials and Equipment Acceptance (NY-MEA)

Southern Building Code Congress International (SBCCI)—Standard Plumbing and Mechanical Code

Underwriters' Laboratories, Inc. (UL)—Listed for fire protection services

Underwriters' Laboratories of Canada (ULC)—Listed for fire protection services

Underwriters' Laboratories Inc. Listed (ANSI/NSF-61)

Joint Concept

The grooved pipe-joining method is simple and reliable. The coupling housing performs several functions as an integral part of the pipe joint. It contains the fully enclosed gasket and reinforces and secures it in position for a proper seal. The housing also engages the pipe grooves around the full pipe circumference and creates a unified joint while it provides the advantages of mechanical joining. The leak-tight joint is created without exposing workers and property to the fire, smoke, and health hazards associated with welded joints or with welding flanges onto pipe.

Types of Grooves

Cut Groove. Grooved piping systems normally use two types of grooves. The first type, cut groove, is achieved by machining a groove in the pipe end. This type of groove may be used for standard weight and heavier pipe walls, cast ductile iron pipe, and other pipe materials that do not lend themselves to mechanical deformation, such as fiberglass reinforced plastic. Cut grooving removes material from the pipe wall and therefore should not be used for grooves in pipes with walls thinner than standard weight.

Rolled Groove. The second type, roll groove, is achieved by placing the pipe end in a roll grooving machine and rolling (mechanically deforming) a groove into the pipe. This grooving is accomplished by pressing a grooving roll into the pipe wall as the pipe is rotated by the machine. The resultant groove does not remove any pipe material. Fig. A9.10 shows the roll grooving process.

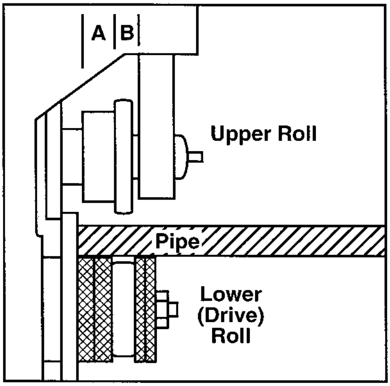

Roll grooving tools cold form groove into pipe – maintains dimensions

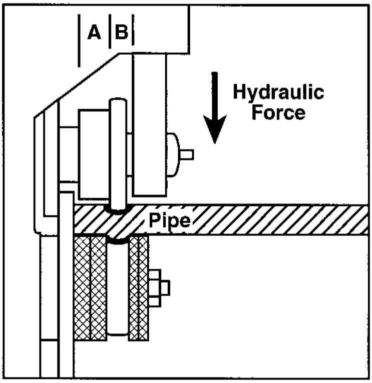

Roll grooving removes no metal from pipe

FIGURE A9.10 Roll grooving process.

Types of Couplings

Flexible Couplings. As with grooves, there are two basic types of pipe couplings. The first type is defined as a flexible coupling. Flexible couplings allow for controlled pipe movement within the coupling while maintaining a positive seal and a self-restrained joint. Such performance is achieved through the combination of the elastomeric gasket, which seals the joint, with the housing, which engages the groove without clamping rigidly onto the pipe. The design allows for expansion, contraction, and deflection generated by thermal changes, building or ground settlement, and seismic activity. Pipe movement accommodation with flexible couplings will minimize the stresses that can be generated by this movement. Figure A9.11 is an exaggerated illustration of a flexible coupling. A welded system requires additional components such as expansion loops and expansion joints, since it consists solely

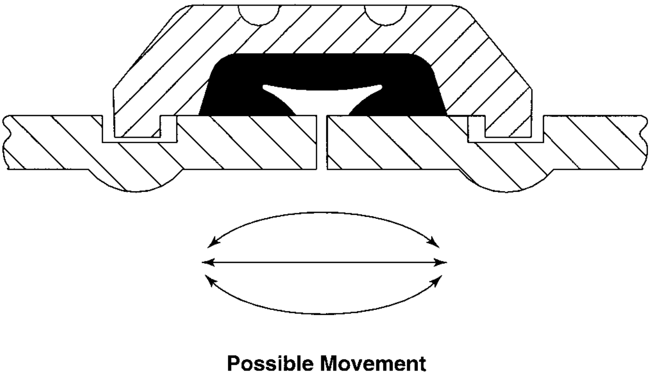

FIGURE A9.11 Flexible coupling.

of rigid connections and has no inherent characteristics to prevent the buildup of thermal and mechanical stresses.

In order to ensure that the flexible behavior is available when required, it is necessary to support a flexible system in such a manner as to direct all motion to the preferred location. For example, to accommodate piping expansion in a long piping run, pipe lengths should be in axial alignment joined by properly gapped pipe couplings between two opposing anchors. When used in mechanical equipment rooms and on pump connections, flexible couplings will characteristically provide greater piping deflections than those generated by traditional piping methods when adequate additional support is provided.

Flexible couplings do not clamp rigidly onto the pipe. Therefore, every joint minimizes noise and vibration transmission to the piping system generated by pumps or other equipment (in contrast to other joining methods). Independent laboratory tests have confirmed that three flexible couplings connected in a series reduce more vibration than do elastomeric-arch or corrugated flexible-metal hose-type vibration isolators. Welded, flanged, or threaded joints offer no vibration attenuation, so additional costly vibration control devices are required.

Rigid Coupling. The second type of coupling is defined as rigid coupling. Rigid couplings positively clamp the pipe to create a rigid joint, so axial movement and deflection are eliminated. They are particularly useful on risers, mechanical rooms, horizontal runs with numerous branches, and other areas where flexibility is not desired. Proper rigid coupling installation provides system behavior characteristics similar to those of other rigid systems, so that all piping remains in strict alignment and is not subject to axial or angular movement during operation. Figure A9.12 is an exaggerated illustration of a rigid coupling. For this reason, systems installed with rigid couplings utilize support techniques similar to those used in traditional flanged and welded systems and do not require additional support as in a flexible system. ASME Pressure Piping Code Section B31.1, Power Piping, and B31.9, Building Services Piping, may be used as guidelines for supporting rigid systems. Risers consisting entirely of rigid couplings can be treated similarly to welded piping systems, and where thermal movement is required, expansion joints or offsets will be necessary to prevent piping system movement and damage to components. The piping systems using rigid couplings are obviously advantageous where rigidity is

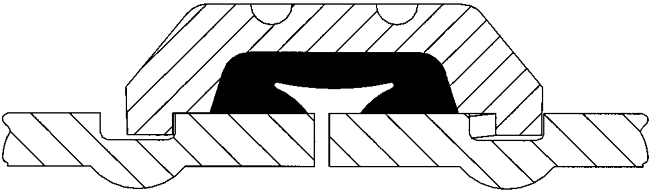

FIGURE A9.12 Rigid coupling.

desired, as in mechanical equipment rooms, long straight runs, and similar applications.

Using Flexible and Rigid Couplings in a Piping System. When both flexible and rigid couplings are utilized, the system designer can optimize hanger spacing, eliminate expansion loops and flex connectors, and incorporate rigidity and flexibiltiy where desired. An example of such a system would be a pumping system which bridges two buildings via an underground line. At the pump end, rigidity may be desirable in the mechanical room to control piping motion, whereas within the straight piping run between buildings, flexible couplings are the most desirable to accommodate anticipated settlements or thermal movements. In the adjoining building for the distribution system, it may be advantageous to use a rigid system, as a high-joint intensity may require an extensive support system when flexible couplings are used. By designing risers and long straight runs with rigid and flexible couplings, the designer can make use of the rigidity of rigid couplings to reduce guiding requirements and the flexibility of flexible couplings to accommodate thermal movement as required.

The use of flexible and rigid couplings provides a variety of benefits to the system designer, installer, and owner, which results in the most reliable system for most applications and makes the grooved method an excellent choice for joining pipe.

Grooved Joint Gaskets

Many factors must be considered in determining the optimum gasket for a specific service. The foremost consideration is temperature, along with concentration of product, duration of service, and continuity of service. Temperatures beyond the recommended limits have a degrading effect on the polymer. Therefore, there is a direct relationship between temperature, continuity of service, and gasket life.

The piping system designer should also consider the gasket style that will provide the desired system performance. Three basic styles are shown in Fig. A9.13 The standard gasket style is suitable for most piping system applications. The FlushSeal® style is designed with a centrally located lip that seals the internal gasket cavity and minimizes the entrapment of system fluids or debris. The EndSeal® seals the pipe ends to virtually eliminate entrapment of system fluids and debris. The piping system designer should review the grooved joint manufacturer's gasket styles and select the style most suited to his system design.

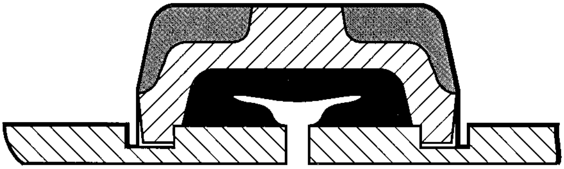

Standard

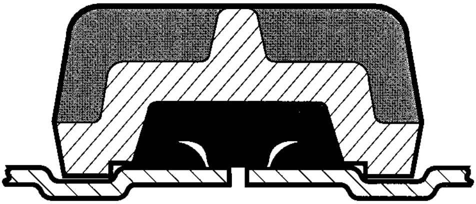

FlushSeal®

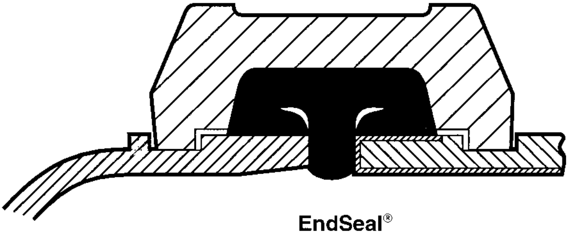

EndSeal®

FIGURE A9.13 Gasket styles.

Gasket Selection

A variety of synthetic rubber gaskets are available to provide the option of grooved piping products for the widest range of applications. To assure the maximum life for the service intended, proper gasket selection and specification is essential.

The compounding of synthetic rubbers is both a science and an art form. There are many gasket materials available from the various manufacturers of grooved pipe joints. The piping system designer should consult the manufacturer for gasket material recommendations about the grooved joint he has specified. The designer is further cautioned that in instances where a gasket is not affected by several substances used alone, their combination could adversely affect the gasket. Where possible, these materials should be subjected to simulated service conditions to determine their suitability.

FlushSeal® and EndSeal® are registered trademarks of Victaulic Company of America.

TABLE A9.7 Maximum Working Pressure

Rigid coupling (Victaulic style 97)	
Nominal pipe size NPS (DN)	Maximum work Pressfit psi (kPa)
1 (25)	750 (5175)
1¼ (32)	750 (5175)
1½ (40)	750 (5175)
2 (50)	750 (5175)
2½ (65)	750 (5175)
3 O.D.	750 (5175)
3 (80)	750 (5175)
4 (100)	750 (5175)
4¼ O.D.	750 (5175)
5 (125)	750 (5175)
5¼ O.D.	700 (4825)
5½ O.D.	700 (4825)
6 (150)	700 (4825)
6¼ O.D.	700 (4825)
6½ O.D.	700 (4825)
8 (200)	600 (4130)
10 (250)	500 (3450)
12 (300)	400 (2750)
14 (350)	300 (2065)
16 (400)	300 (2065)
18 (450)	300 (2065)
20 (500)	300 (2065)
24 (600)	250 (1725)

Flexible coupling (Victaulic style 77)	
Nominal pipe size NPS (DN)	Maximum work Pressfit psi (kPa)
¾ (20)	1,000 (6900)
1 (25)	1,000 (6900)
1¼ (32)	1,000 (6900)
1½ (40)	1,000 (6900)
2 (50)	1,000 (6900)
2½ (65)	1,000 (6900)
3 O.D.	1,000 (6900)
3 (80)	1,000 (6900)
3½ (90)	1,000 (6900)
4 (100)	1,000 (6900)
4¼ O.D.	1,000 (6900)
5 (125)	1,000 (6900)
5¼ O.D.	1,000 (6900)
5½ O.D.	1,000 (6900)
6 (150)	1,000 (6900)
6¼ O.D.	1,000 (6900)
6½ O.D.	1,000 (6900)
8 (200)	800 (5500)
10 (250)	800 (5500)
12 (300)	800 (5500)
14 (350)	300 (2065)
15 (375)	300 (206)
16 (400)	300 (2065)
18 (450)	300 (2065)
20 (500)	300 (2065)
22 (550)	300 (2065)
24 (600)	250 (1725)

Source: Courtesy of Victaulic Company of America.

TABLE A9.8 Gasket Temperature Rating

Gasket grade*	Temperature range*	Compound
E	−30°F to +230°F −34°C to +110°C	EPDM
T	−20°F to +180°F −29°C to +82°C	Nitrile
E (Type A)	Ambient	EPDM
M-2	−40°F to +160°F −40°C to +71°C	Epichlorohydrin
V	+30°F to +180°F −1°C to +82°C	Neoprene
O	+20°F to +300°F −7°C to 149°C	Fluoro-elastomer
L	−30°F to +350°F −34°C to +177°C	Silicone #
A	+20°F to +180°F −7°C to +82°C	White nitrile
T (EndSeal)	−20°F to +150°F −29°C to +66°C	High modulus nitrile

* The gasket grades and temperature ranges shown in this table are for gaskets as manufactured by Victaulic Company of America. Other manufacturers' products may not be rated as shown here. Consult the gasket manufacturer for exact temperature range.

Pressure-Temperature Ratings. Couplings used in grooved mechanical pipe joints are proprietary designs offered by their various manufacturers. The piping system designer should review the manufacturer's literature to determine pressure and temperature ratings. Pressure ratings for flexible and rigid coupling are shown in Table A9.7, and temperature ratings of gasket materials are shown in Table A9.8, courtesy of Victaulic Company of America.

Piping System Design Considerations. Grooved mechanical-joint piping systems have some specific characteristics that are different from conventional threaded, welded, and flanged systems. When understood and properly utilized, the piping system designer can achieve well-designed, economical piping systems. As always, professional piping design practice must prevail. The following considerations should be reviewed during the piping system design.

In all piping systems designs, piping system thermal growth must be considered. Common methods of accommodating grooved piping system movement are 1) to allow the system to free float. This design method allows the pipe to move in a desired direction through the use of anchoring or guidance; or 2) utilize the linear movement-deflection capabilities of flexible grooved couplings.

The selection of either of these methods is dependent on the type of piping system and the designer's preference. Since it is difficult to predict all system designs, it is the intent here to call attention to the mechanical advantages of the grooved piping method and how it can be used to the piping system designer's benefit. These examples are presented to stimulate thought and should not be considered as recommendations for a specific system.

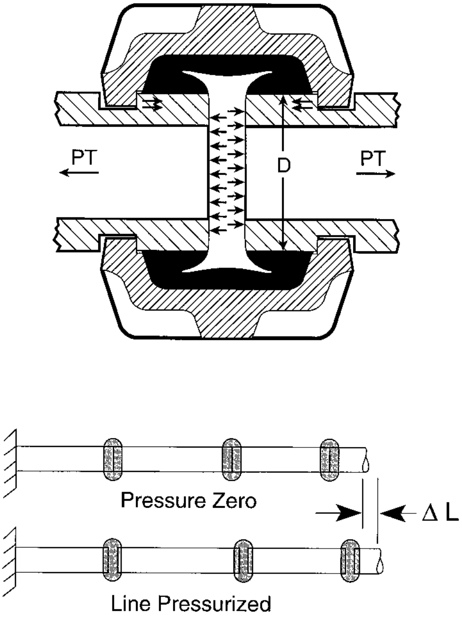

FIGURE A9.14

Free-Floating System

Free-floating systems are piping systems which are allowed to thermally expand or contract without the use of expansion joints, provided that this movement does not cause bending-moment stresses at branch connections or is not harmful to joints and changes in direction or to parts of structures or other equipment. This can be accomplished by randomly installing joints or, if desired, by installing guides to control the direction of movement. The effects of pressure thrusts must be taken into account when utilizing flexible grooved couplings, as the pipe may move to the full extent of the available pipe end gaps when allowed to float. See Fig. A9.14 for pressure-thrust example.

$$\mathrm{PT} = \frac{\pi}{4} D^2 P \tag{A9.1}$$

PT = Pressure thrust (lb) (newtons)
D = Outside diameter of pipe (in) (mm)
P = Internal pressure (psi) (kPa)

The system designer should ensure that branch connections and offsets are sufficiently long so that the maximum angular deflection of the coupling is never exceeded and that it can accommodate the anticipated total movement of the pipes. Otherwise, the designer must anchor the system and direct movements. See Table A9.9 for recommended pipe alignment guide spacing.

Flexible Grooved Couplings Utilizing Their Linear Movement and Deflection Capabilities

When designing piping joined with flexible mechanical grooved type couplings, it is necessary to give consideration to certain characteristics of these couplings. These characteristics distinguish flexible groove-type couplings from other types and methods of pipe joining. When this is understood, the designer can utilize the many advantages that these couplings provide.

Linear and angular movement available at flexible grooved pipe joints is published for each coupling manufacturer. These values are theoretical maximums. For design purposes, these figures should be reduced by the following factors to allow for coupling and pipe groove tolerances.

Linear and Angular Movement Tolerance

NPS ¾–3½ (DN20-90)—Reduce published figures by 50 percent

NPS 4 (DN100) and larger—Reduce published figures by 25 percent

Standard roll grooved pipe will provide ½ the expansion-contraction or deflection capabilities of the same size standard cut grooved pipe

The angular deflection available at a flexible grooved pipe joint is useful in simplifying and speeding system design and installation.

Angular deflection or misalignment is calculated

$$
\begin{aligned}
Y &= L\,\mathrm{SIN}\blacklozenge \\
\Theta &= \mathrm{SIN}^{-1}\frac{G}{D} \\
Y &= \frac{G \times L}{D}
\end{aligned}
\qquad \text{(A9.2)}
$$

Y = deflection of misalignment (in) (mm)

G = allowable pipe end movement (in) (mm)

$\blacklozenge$ = allowable deflection (degrees) from centerline of pipe reduced by angular movement tolerance

D = pipe outside diameter (in) (mm)

L = pipe length (in) (mm)

Reference Fig. A9.15 for sample diagram.

Flexible grooved-type couplings allow angular flexibility and rotational movement to take place at joints. These features provide advantages in installing and

TABLE A9.9 Recommended Pipe Alignment Guide Spacing

Nominal pipe size NPS (DN)	Maximum distance to first guide or anchor in (mm)	Approximate distance between first to second guide in (mm)
1 (25)	4″ (101.6)	1′–4″ (406.4)
1¼ (32)	5″ (127.0)	1′–5″ (431.8)
1½ (40)	6″ (152.4)	1′–9″ (533.4)
2 (50)	8″ (203.2)	2′–4″ (711.2)
2½ (65)	10″ (254.0)	2′–11″ (889.0)
3 (80)	1′–0″ (304.8)	3′–6″ (1066.8)
3½ (90)	1′–2″ (355.6)	4′–1″ (1244.6)
4 (100)	1′–4″ (406.4)	4′–8″ (1422.4)
5 (125)	1′–8″ (508.0)	5′–8″ (1727.2)
6 (150)	2′–0″ (609.6)	7′–0″ (2133.6)
8 (200)	2′–8″ (812.8)	9′–4″ (2844.8)
10 (250)	3′–4″ (1016.0)	11′–8″ (3556.0)
12 (300)	4′–0″ (1219.2)	14′–0″ (4267.2)
14 (350)	4′–8″ (1422.4)	16′–4″ (4978.4)
16 (400)	5′–4″ (1625.6)	18′–8″ (5689.6)
18 (450)	6′–0″ (1828.8)	21′–0″ (6400.8)
20 (500)	6′–8″ (2032.0)	23′–4″ (7112.0)
24 (600)	8′–0″ (2438.4)	28′–0″ (8534.4)

Source: Courtesy of Victaulic Company of America.

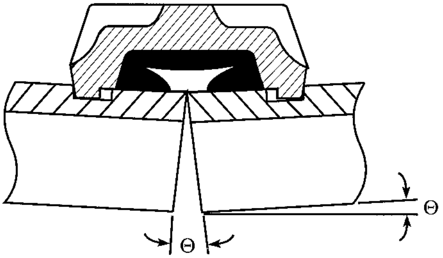

¾ - 3½" (20 - 90 mm) – Reduce published figures by 50%
4" (100 mm) and larger – Reduce published figures by 25%

Standard roll grooved pipe will provide one-half the expansion/contraction or deflection capabilities of the same size standard cut groove pipe.

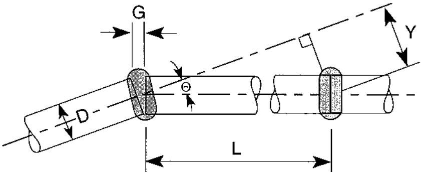

FIGURE A9.15 Angular movement.

neering piping systems but must be considered when determining hanger and ort spacing. As illustrated in Fig. A9.16, it is obvious that this system would ire further hangers (or use of rigid couplings) to eliminate the drooping of the s that may occur. Hanger positions must be considered in relation to the angular rotational movement that may occur at joints.

lexible couplings allow linear move- t, therefore consideration must be n to pressure thrusts which would v the pipe ends to move to the maxi- n extent allowed by the coupling. movement will accumulate at the of system runs. Offsets at the ends stem runs as illustrated in Fig. A9.17 to be capable of deflecting suffi- tly to prevent harmful bending mo- ts which would be induced at the s of the offset. It should be noted if the pipes were to expand due to mal changes, then further growth of pipes would also take place at the .

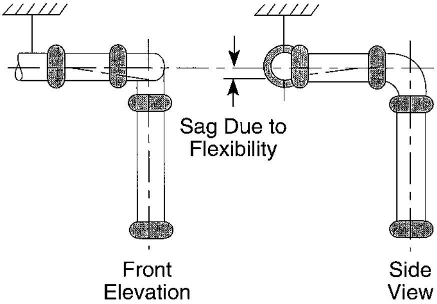

FIGURE A9.16 Support requirement.

ngular deflection at butted or fully spaced joints is not possible unless the ends e pipes can shorten and grow as required. Unrestrained deflected joints will ghten up under the action of axial pressure thrusts or other forces acting to

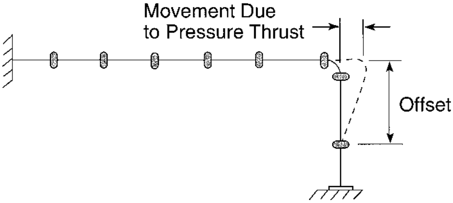

FIGURE A9.17 Pressure thrust movement.

pull pipes apart. If joints are to be maintained deflected, then lines must be anchored to restrain pressure thrusts and end pull forces, otherwise sufficient lateral force must be exerted to keep joint deflected. Lateral forces will always act on deflected joints due to internal pressure. A fully deflected joint will no longer be capable of providing the full linear movement normally available at the joint.

The grooved piping method will not allow maximum linear and angular movement simultaneously at the same joint. If linear and angular movement are expected simultaneously, systems should be designed with sufficient joints to accommodate both, including allowance for recommended tolerances. Figure A9.18 shows a typical arrangement used to accommodate simultaneous linear and angular movement.

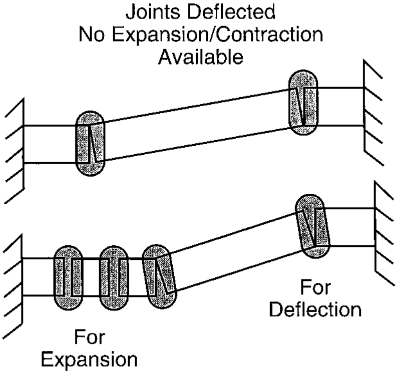

FIGURE A9.18 Accommodating piping expansion and deflection.

For anchored systems, where pressure thrusts do not act to hold the joints in tension, or in systems where the joints have been intentionally deflected (e.g., curves), lateral restraint should be provided to prevent movement of the pipes due to pressure thrusts acting at deflections. Lightweight hangers are not adequate in preventing sideways movement of pipes. It should be anticipated that small deflections will occur in all straight lines, and side thrusts will be exerted on the joints. An example of inadequate lateral restraint is shown in Fig. A9.19.

Flexible couplings do not automatically provide for expansion or contraction of piping. In anchored systems, gaps must be set to handle combinations of expansion and contraction. In free-floating systems, offsets of sufficient length must be used to accommodate movement without overdeflecting joints. Design anchors to direct movement away from or to protect critical changes in direction, branch connections, and structure. Spacing and suitable types of supports should be considered in accommodating anticipated pipe movements. Refer to Table A9.10 for suggested support spacing for flexible and rigid coupled systems.

Movement in piping systems due to thermal changes can be accommodated with the grooved piping method. Sufficient flexible joints must be available to accommodate anticipated movement, including movement tolerance. If anticipated movement will be greater than provided by the total number of joints in the system, additional expansion in the form of an expansion joint should be considered. The

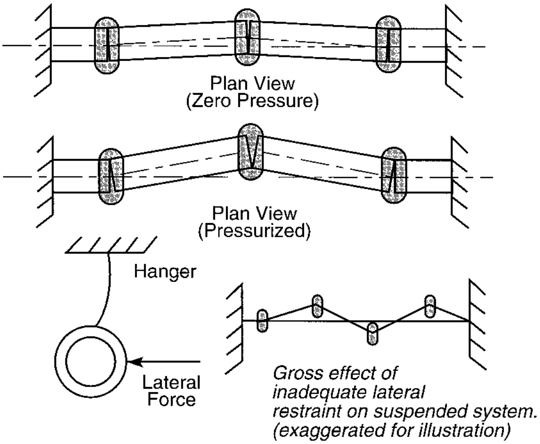
Plan View
(Zero Pressure)
Plan View
(Pressurized)
Hanger
Lateral Force
Gross effect of inadequate lateral restraint on suspended system. (exaggerated for illustration)

FIGURE A9.19 Inadequate lateral restraint.

first step in accommodating thermal movement is to compute the exact change in the linear length of the piping system over the distance of interest. The actual expansion of 100 ft and 100 m pipe lengths has been computed at different temperatures for the most common piping materials (carbon steel, stainless steel, and copper tubing) and are shown in Table A9.11. These values should not be applied to pipe of other materials, as they will vary. Expansion coefficients may vary 5 percent or more when obtained from different sources. This variation should be taken into account. Example A9.1 illustrating the use of Table A9.11 follows:

Example A9.1

Given: 240-ft (75-m)–long carbon-steel pipe

Maximum operating temperature = 220°F (104°C)
Minimum operating temperature = 40°F (4°C)
Temperature at time of installation = 80°F (26°C)

Calculation: From Table A9.11, carbon-steel pipe expansion

220°F (104°C)	1.680 in per 100 ft of carbon-steel pipe
40°F (4°C)	0.300 in per 100 ft of carbon-steel pipe
Difference:	1.380 in per 100 ft of carbon-steel pipe for temperature 40°F (4°C) to 220°F (104°C)

$$\text{Therefore, 240-ft of pipe} = \frac{240(1.380)}{100} = 3.312 \text{ in (8.41 cm)}$$

Example A9.2 A Simplified Calculation for a Long Straight Piping System. 400-ft (122-m)-long, straight piping system; NPS 6 (DN 150); 20-ft (6-m) random lengths; installed at 60°F (+16°C) (also lowest operating temperature; maximum

TABLE A9.10 Suggested Support Spacing for Rigid and Flexible Coupled Piping Systems

Rigid systems

NPS (DN)	Suggested maximum span between supports ft (m)					
	Water service			Gas or air service		
	*	†	‡	*	†	‡
1 (25)	7 (2.1)	9 (2.7)	12 (3.7)	9 (2.7)	9 (2.7)	12 (3.7)
1¼ (32)	7 (2.1)	11 (3.4)	12 (3.7)	9 (2.7)	11 (3.4)	12 (3.7)
1½ (40)	7 (2.1)	12 (3.7)	15 (4.6)	9 (2.7)	13 (4.0)	15 (4.6)
2 (50)	10 (3.1)	13 (4.0)	15 (4.6)	13 (4.0)	15 (4.6)	15 (4.6)
3 (80)	12 (3.7)	15 (4.6)	15 (4.6)	15 (4.6)	17 (5.2)	15 (4.6)
4 (100)	14 (4.3)	17 (5.2)	15 (4.6)	17 (5.2)	21 (6.4)	15 (4.6)
6 (150)	17 (5.2)	20 (6.1)	15 (4.6)	21 (6.4)	25 (7.6)	15 (4.6)
8 (200)	19 (5.8)	21 (6.4)	15 (4.6)	24 (7.3)	28 (8.5)	15 (4.6)
10 (250)	19 (5.8)	21 (6.4)	15 (4.6)	24 (7.3)	31 (9.5)	15 (4.6)
12 (300)	23 (7.0)	21 (6.4)	15 (4.6)	30 (9.1)	33 (10.1)	15 (4.6)
14 (350)	23 (7.0)	21 (6.4)	15 (4.6)	30 (9.1)	33 (10.1)	15 (4.6)
16 (400)	27 (8.2)	21 (6.4)	15 (4.6)	35 (10.7)	33 (10.1)	15 (4.6)
18 (450)	27 (8.2)	21 (6.4)	15 (4.6)	35 (10.7)	33 (10.1)	15 (4.6)
20 (500)	30 (9.1)	21 (6.4)	15 (4.6)	39 (11.9)	33 (10.1)	15 (4.6)
24 (600)	32 (9.8)	21 (6.4)	15 (4.6)	42 (12.8)	33 (10.1)	15 (4.6)

* Spacing corresponds to ASME B31.1 Power Piping Code.

† Spacing corresponds to ASME B31.9 Building Services Piping Code.

‡ Spacing corresponds to NFPA 13 Sprinkler Systems.

Flexible systems: maximum support spacing for straight runs without concentrated loads and where full linear movement is required.

Flexible systems

NPS (DN)	Pipe length in ft (m)									
	7 (2.1)	10 (3.0)	12 (3.7)	15 (4.6)	20 (6.1)	22 (6.7)	25 (7.6)	30 (9.1)	35 (10.7)	40 (12.2)
	*Average hangers per pipe length evenly spaced									
¾–1 (20–25)	1	2	2	2	3	3	4	4	5	6
1¼–2 (32–50)	1	2	2	2	3	3	4	4	5	5
2½–2 (65–100)	1	1	2	2	2	2	2	3	4	4
5–8 (125–200)	1	1	1	2	2	2	2	3	3	3
10–12 (250–300)	1	1	1	2	2	2	2	3	3	3
14–16 (350–400)	1	1	1	2	2	2	2	3	3	3
18–24 (450–600)	1	1	1	2	2	2	2	3	3	3
28–42 (700–1050)	1	1	1	1	2	2	2	3	3	3

* No pipe length should be left unsupported between any two couplings.

* No pipe length should be left unsupported between any two couplings.

Maximum support spacing for straight runs without concentrated loads and where full linear movement is not required.

NPS (DN)	Suggested maximum span between supports ft (m)
¾–1 (20–25)	8 (2.4)
1¼–2 (32–50)	10 (3.0)
2½–4 (65–100)	12 (3.7)
5–8 (125–200)	14 (4.3)
10–12 (250–300)	16 (4.9)
14–16 (350–400)	18 (5.5)
18–30 (450–750)	20 (6.1)
32–42) (800–1050)	21 (6.4)

TABLE A9.11 Thermal Expansion of Pipe

	In per 100 ft (mm per 100 m)		
Temperature °F (°C)	Carbon steel	Copper	Stainless steel
−40 (−40)	−0.288 (−24.0)	−0.421 (−35.1)	−0.461 (−38.4)
−20 (−28)	−0.145 (−12.1)	−0.210 (−17.4)	−0.230 (−19.0)
0 (−17)	0 (0)	0 (0)	0 (0)
20 (−6)	0.148 (12.5)	0.238 (19.7)	0.230 (19.0)
32 (0)	0.230 (19.0)	0.366 (30.5)	0.369 (30.8)
40 (4)	0.300 (24.9)	0.451 (37.7)	0.461 (38.4)
60 (15)	0.448 (37.4)	0.684 (57.1)	0.691 (57.7)
80 (26)	0.580 (48.2)	0.896 (74.8)	0.922 (76.8)
100 (37)	0.753 (62.7)	1.134 (94.5)	1.152 (96.1)
120 (48)	0.910 (75.8)	1.366 (113.9)	1.382 (115.2)
140 (60)	1.064 (88.6)	1.590 (132.6)	1.613 (134.5)
160 (71)	1.200 (100.1)	1.804 (150.3)	1.843 (153.6)
180 (82)	1.360 (113.2)	2.051 (170.9)	2.074 (172.9)
200 (93)	1.520 (126.6)	2.296 (191.3)	2.304 (191.9)
212 (100)	1.610 (134.2)	2.428 (202.4)	2.442 (203.4)
220 (104)	1.680 (140.1)	2.516 (209.7)	2.534 (211.3)
230 (110)	1.760 (146.7)	2.636 (219.8)	2.650 (220.8)
260 (126)	2.020 (168.3)	— —	— —
280 (137)	2.180 (181.8)	— –	— —
300 (148)	2.350 (195.9)	— —	— —
320 (160)	2.530 (211.0)	— —	— —
340 (171)	2.700 (225.1)	— —	— —
350 (176)	2.790 (232.6)	— —	— —

operating temperature of 180°F [+82°C]. Table A9.11 shows this system will give 3.7, in (9.4 cm) total anticipated movement. Reference Fig. A9.20 for a sketch of Example 1 piping system.

20	Joints between anchor points
× 1/4 in	Movement per coupling (cut grooved pipe with Victaulic Style 77 couplings performance data)
5 in	(12.7 cm) available movement
−25%	Movement tolerance
3.75 in	(9.52 cm) Total linear movement available
3.7 in	(9.4 cm) Required movement

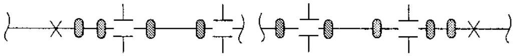

Example 1 & 2

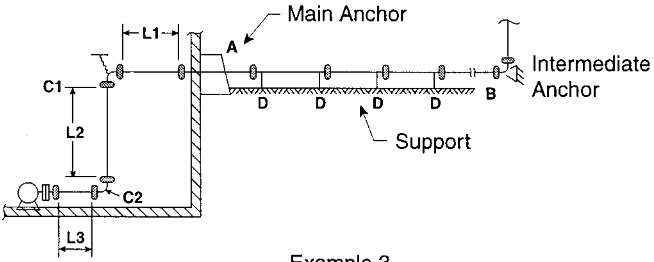
Main Anchor
A
L1
C1
L2
C2
L3
D
D
D
D
Support
B
Intermediate Anchor

Example 3

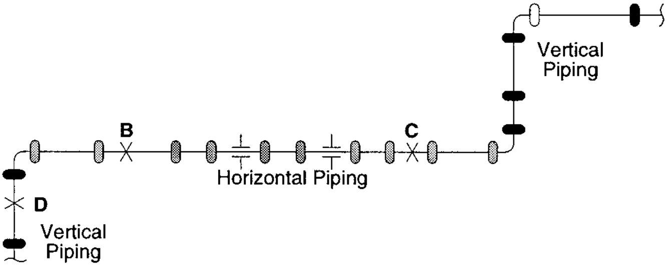
Vertical Piping
B
C
Horizontal Piping
D
Vertical Piping

Example 4

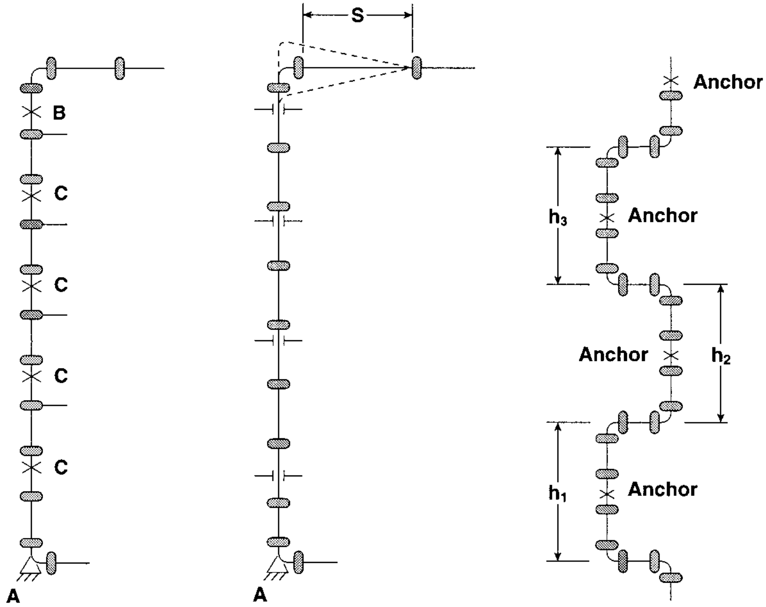
B
C
C
C
C
A
S
A
Anchor
h3
Anchor
Anchor
h2
h1
Anchor

Example 5 Example 6 Example 7

FIGURE A9.20 Example piping systems.

Expansion Loops Utilizing Flexible Couplings and Fittings

Grooved piping offers the designer the advantage of using flexible couplings and fittings in expansion loops without inducing stresses in the pipes, elbows, or joints. The deflection capability of flexible couplings allows for thermal growth-contraction to be absorbed within the couplings at the elbows as the thermal forces induce deflection. It is important that rigid couplings are not used on expansion loops, as these couplings are not designed to accommodate angular deflection.

As shown in Fig. A9.21a, a total of eight flexible couplings, four grooved 90° elbows, and three pipe spools are required to complete each expansion loop. As system temperature decreases and the pipe run contracts (see Fig. A9.21b), the loop expands, and the deflection capability of the couplings accommodates this movement. As system temperature increases (see Fig. A9.21c), the opposite effect occurs as the pipe run expands and the loop contracts with the couplings accommodating the deflection in the opposite direction.

The amount of thermal expansion and contraction, ΔX, should be determined by the system designer based on the length of pipe run between anchors and the anticipated temperature changes from the installation temperature (see Table A9.11 for details). The angular deflection available at each coupling is a design characteristic inherent to the coupling size, style, and the type of groove—cut or roll grooved. The length of the perpendicular branches of the loop dimension A (see Figure A9.21a) is determined by the amount of expected pipeline expansion or contraction, ΔX, and the deflection available per joint. Dimension A should be the same on both sides of the loop. The length of the parallel branch of the expansion loop, Dimension B, is determined by ΔX, and it must be sufficiently long enough to prevent the elbows at the pipe run from butting during thermal expansion. It is recommended that Dimension B be at least 2 in (50.8 mm) larger than ΔX.

The designer can use Fig. A9.22, Expansion Loop Design, to aid in the design of expansion. These loops incorporate all the design information for each size of Victaulic Flexible Coupling, including the angular movement tolerance. The nominal pipe size and either the design thermal expansion, ΔX, or the length of perpendicular branches, dimension A, must be known, and the other can be determined. It is essential for a properly functioning expansion loop that it be installed without any coupling deflection and that the pipeline be properly anchored and guided. Whenever possible, the expansion loop should be located adjacent to an anchor within four pipe diameters. The first and second alignment guides on the opposite side of the expansion loop should be located a maximum distance of 4 and 14 pipe diameters, respectively. Additional intermediate guides may be required throughout the system for pipe alignment. Refer to Table A9.9 for recommended spacing. If the expansion loop cannot be located adjacent to an anchor, guides should be installed on both sides of the unit, as mentioned.

Example A9.3 Expansion Loop Calculation. Using the parameters established in Example A9.2, NPS 6 (DN 150) nominal pipe size and 3.75 in (95.2 mm) of total anticipated movement, refer to Fig. A9.22 to determine the length of perpendicular loop branches for both cut and roll groove pipe. Reference Fig. A9.20 for a sketch of Example 2 piping system.

$$\Delta X = 3.75 \text{ in } (95.2 \text{ mm})$$

$$\text{Pipe size} = \text{NPS 6 (DN 150)}$$

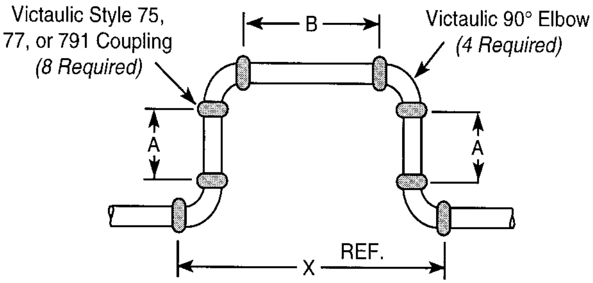
Victaulic Style 75,
77, or 791 Coupling
(8 Required)
B
Victaulic 90° Elbow
(4 Required)
A
A
X REF.

A
Expansion Loop

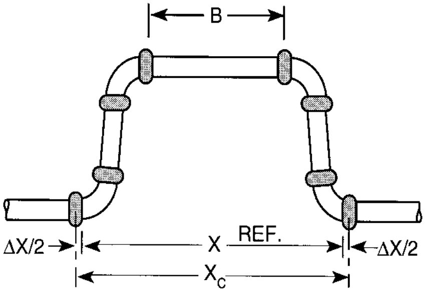
B
ΔX/2
X REF.
ΔX/2
X_C

B
Thermal Contraction
Pipeline Shrinks – Loop Expands

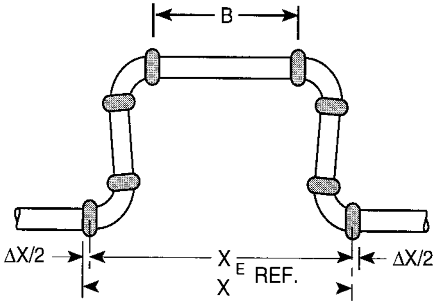
B
ΔX/2
X_E REF.
ΔX/2
X

C
Thermal Expansion
Pipeline Grows into Loop – Loop Contracts

FIGURE A9.21 Thermal expansion loop.

Expansion Loop Design Utilizing Victaulic Flexible Couplings and Fittings*
VICTAULIC CUT GROOVED PIPE

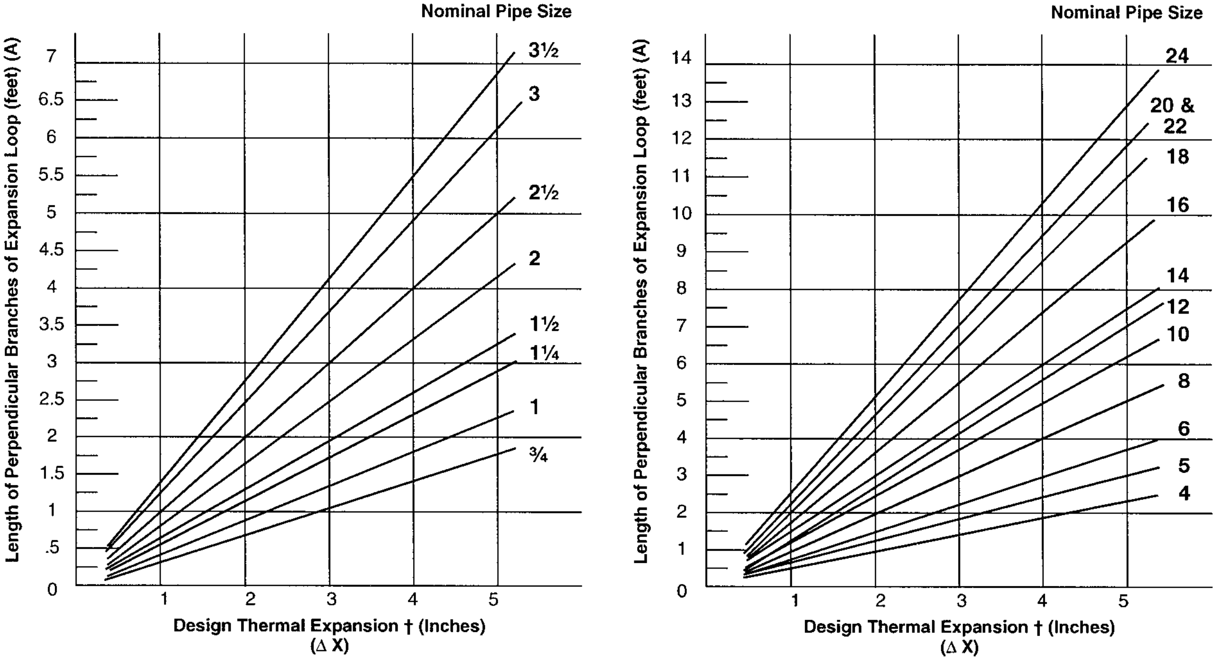

FIGURE A9.22 Expansion loop design.

Expansion Loop Design Utilizing Victaulic Flexible Couplings and Fittings*
VICTAULIC ROLL GROOVED PIPE

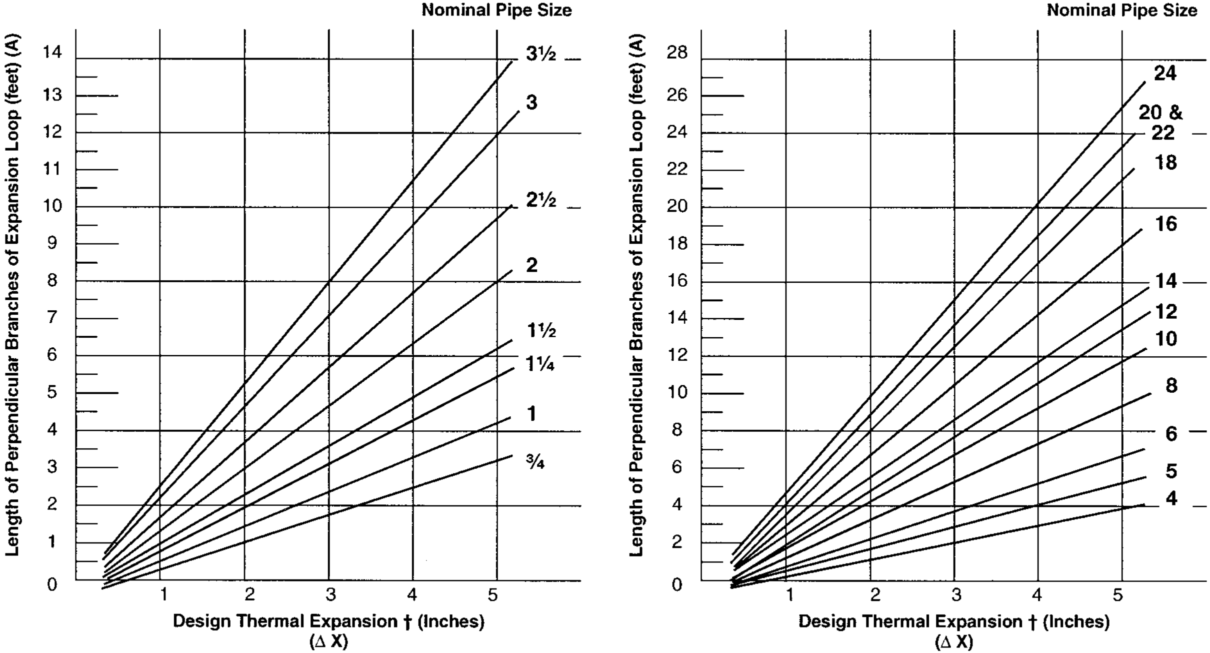

* Based on pipe grooved in accordance with Victaulic specifications.

† Valves include design tolerances: 50% reduction for sizes below 4"/25% reduction for sizes 4" and larger.

FIGURE A9.22 (*Continued*) Expansion loop design.

For cut groove pipe (Fig. A9.22)

$A = 2.7$ ft (0.82 m) minimum

For roll groove pipe (Fig. A9.22)

$A = 5.4$ ft (1.65 m) minimum

To provide an expansion loop for the described system, the two branches must be a minimum of 2.7 ft (0.82 m) and 5.4 ft (1.65 m) long for cut and roll groove pipe, respectively. The parallel branch of the expansion loop must be at least 2 in (50.8 mm) larger than ΔX.

$$B = \Delta X + 2$$

$$B = 3.75 \text{ in} + 2 \text{ in} = 5.75 \text{ in minimum } (95.25 \text{ mm} + 50.8 = 146.05 \text{ mm})$$

The simple system described in Example A9.2 and above accommodated thermal expansion through the use of flexible couplings and an expansion loop. We must also discuss the application of flexible couplings and rigid couplings with the use of main anchors, intermediate anchors, and guides to accommodate thermal movement and pressure thrust.

Anchors

Anchors can be used to prevent movement due to pressure thrust and thermal growth. There are two types of anchors which are commonly used:

A. Main anchors
B. Intermediate anchors

Main anchors are installed at or near terminal points and changes of direction of a pipe line. The forces acting on a main anchor will result from internal pressure thrust and thermal growth. These forces can generate substantial loads which may require structural analysis. Intermediate anchors divide a long pipe run, with main anchors at each end, into individual expanding sections. The pressure thrust on the intermediate anchors cancel each other out. Where there is a change in pipe diameter, there will be a differential pressure thrust acting on an intermediate anchor. Typical examples of main and intermediate anchors are shown in Fig. A9.23.

The following examples illustrate the mechanical advantages of the grooved piping method and how they can be utilized to the piping systems designer's benefit. These are presented to stimulate thought and should not be considered as recommendations for a specific system. The grooved piping method, when used in a piping system, should always be utilized in designs consistent with good piping practice.

Example A9.4 Anchor Locations. To properly restrain this system, reference Fig. A9.20 for Example 3 piping system sketch. It would be necessary to provide a pressure thrust anchor at "A" to prevent the piping outside the structure from being forced inside by the pressure thrust acting at the elbow "B." Inside, it would be necessary to provide a hanger at point C1, or a base support at point C2. No

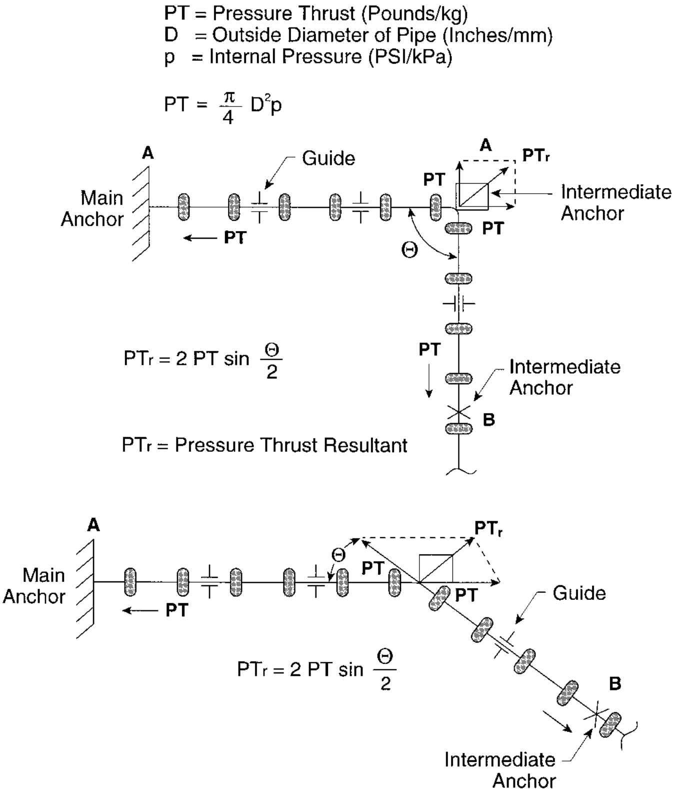
PT = Pressure Thrust (Pounds/kg)
D = Outside Diameter of Pipe (Inches/mm)
p = Internal Pressure (PSI/kPa)
PT = $\frac{\pi}{4}$ D^{2}p
A
Main Anchor
Guide
PT
A
PTr
PT
Intermediate Anchor
PT
Θ
PTr = 2 PT sin $\frac{\Theta}{2}$
PT
Intermediate Anchor
B
PTr = Pressure Thrust Resultant
A
Main Anchor
PT
Θ
PT
PTr
PT
Guide
PTr = 2 PT sin $\frac{\Theta}{2}$
B
Intermediate Anchor

FIGURE A9.23

anchoring would be required, and the self-restraining feature of the joints would hold the piping securely together. Outside, it would be necessary to ensure that the maximum end load of the joints was not exceeded due to thermal movement of the pipes. Intermediate anchors may be required. The pipe must be properly supported and guided. Refer to Tables A9.9 and A9.10. Where flexible couplings are not required to accommodate thermal movement, rigid couplings can reduce supports and offsets.

Example A9.5 Anchor and Guide Locations. Anchor at location D to support weight of pipe. Use hangers to support weight of piping. Anchors as well as guides may be required at B and C if flexible couplings are used as expansion joints. Refer to Fig. A9.20 for Example 4 piping system sketch.

Example A9.6 Treatment of Risers with Branch Connections. Free-moving risers can cause shear forces at branch connections due to pressure thrusts or thermal movement. The pipe should be anchored at or near the base with a main pressure thrust anchor, A, capable of supporting the full pressure thrust and local weight of pipe and fluids. Any movement of horizontal pipe at the bottom of the riser must be considered independently, with adequate provision for movement. Refer to Fig. A9.20 for Example 5 piping system sketch.

When flexible couplings are used, the system can be anchored at the top, B, with an anchor capable of withstanding full pressure thrust at the top of the riser plus local weight of pipe. The use of this upper anchor prevents any possibility of closed flexible joints opening under pressure and causing movement at the riser top. This method is often used for fire standpipe or similar systems where movement would cause shearing of intermediate components or branches.

Piping between upper, B, and lower, A, anchors should be supported by intermediate anchors, C, capable of supporting local pipe weight and preventing lateral movement. Intermediate anchors should be placed a minimum of every other random length of pipe.

The system can be anchored at A also, and intermediate anchors at C can be used to support local pipe weight. Allowance for thermal movement should be considered, depending on application.

Example A9.7 Treatment of Risers Without Branch Connection for Flexible Couplings. Reference Fig. A9.20 for Example 6 piping system sketch. With this method, a main thrust anchor is again needed at the bottom of the riser, A, which supports the total weight of pipe and fluids. Guidance is necessary at suitable intervals to prevent buckling of the riser. It is necessary that the pipe length, S, at the top of the stack be long enough to accommodate the total vertical movement. This movement is the result of the combined effect of pipe being moved to the full extent of the available pipe linear movement due to pressure thrusts and thermal growth.

Rigid couplings also could be used to prevent linear movement due to pressure thrust. For offset S at the top of the riser to accommodate thermal growth, it would be necessary to use the proper number of flexible couplings to provide the angular deflection.

Example A9.8 Treatment of Risers to Eliminate Concentrated Anchor Loads. Refer to Fig. A9.20 for Example 7 piping system sketch. When structural requirements dictate that base anchor load or upper anchor load must be minimized, then the use of a *looped* system should be considered. In the system illustrated, each anchor carries the local weight of pipe. This method is often considered in tall buildings where high anchor loads would be generated. The offsets must be long enough to accommodate movement in the pipes due to flexible-coupling linear movement due to pressure thrust plus any thermal or other movements of pipes or supports. The use of rigid couplings could be considered to prevent linear movement due to pressure thrust.

Offsets and Differential Settlement

In many piping system designs, offsets or differential settlement must be considered. This is particularly important, as pipes pass from one structure to another. Flexible couplings offer the designer a method to accommodate offsets of pipe runs due to misalignment or building settlement. The offset transition can be achieved only with flexible couplings, as they allow for angular deflection at each joint.

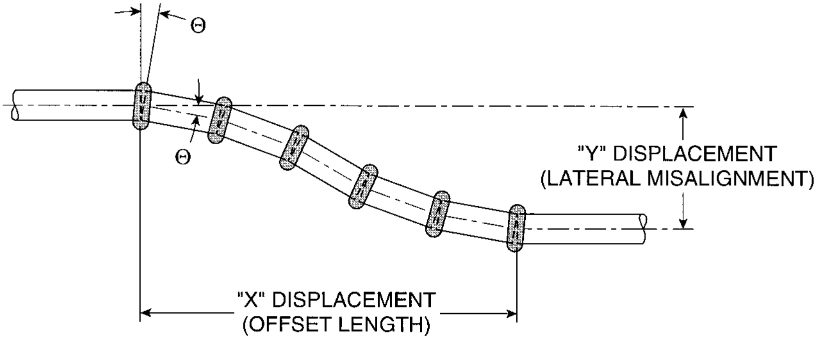

FIGURE A9.24 Pipe displacement.

Offsets are determined by the amount of lateral misalignment on the particular pipe run and the length along the pipe run that is required for the parallel shift of the run. In Fig. A9.24, these two parameters are shown as the Y-Displacement, lateral misalignment, and the X-Displacement, offset length, respectively.

The pipe spools are first deflected in the direction of the misalignment until the midpoint of a particular pipe spool is more than half the required Y-Displacement. This spool then becomes a transition spool, as an equal number of couplings and pipe spools are required on either side of the transition spool to deflect the pipeline back to its original direction.

A major objective in designing for a misalignment is to achieve the required Y-Displacement, using the minimum number of couplings. To this end, because of symmetry around a transition point, as explained earlier, the point of inflection is a pipe spool and not a coupling. Therefore, for all calculations and results in this section, an even number of couplings and an odd number of pipe spools have been used. Also, to maximize the deflection at each joint, cut-groove pipe should be considered. Should roll-grooved joints be used, then the deflection available will be one-half that of a cut-grooved joint.

The number of couplings and the length of the pipe spools are the two variables that can be altered to obtain the desired misalignment. Other factors, such as the maximum angle of deflection at each coupling and the maximum pipe-end separation are a function of the size and style coupling being used.

The following is a technical explanation of the formulas derived to calculate the number of couplings, spool length, X- and Y-Displacements.

The geometric derivation to accommodate offsets starts with the deflection on one pipe spool from the pipe run at the angle, Θ (see Fig. A9.24). The Y-Displacement from the pipe-run centerline after the first deflected spool is shown as $\Delta Y_1 = (L + a) \sin \Theta$, where L is the length of the pipe spool and a is one-half the maximum pipe-end separation for the particular coupling to be used. As the second spool is connected and deflected, also at the angle, Θ, the total angle of deflection from the pipe run is $\Theta + \Theta$, or 2Θ (see Fig. A9.25). The Y-Displacement due to the second coupling and pipe spool is $\Theta Y_2 = (L + a) \sin 2\Theta$.

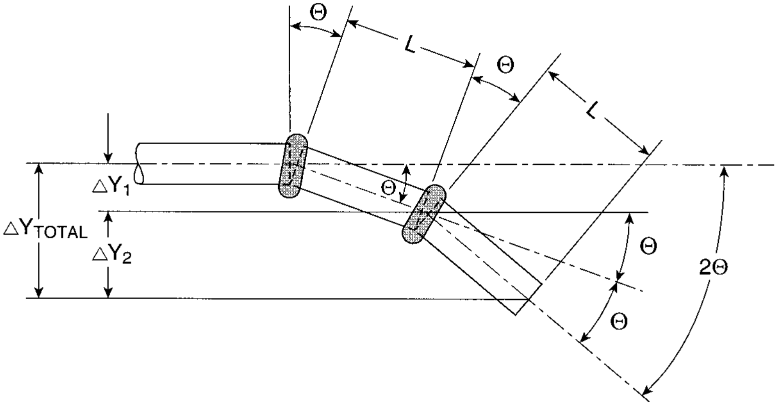

FIGURE A9.25 Deflection of pipe.

Since the length of each pipe spool is equal, then the total Y-Displacement to the end of the second pipe spool from the pipe run is the sum of each spool or

$$\Delta Y_{\text{TOTAL}} = \Delta Y_1 + \Delta Y_2 = (L + a)\,(\sin\Theta) + \sin 2\Theta). \tag{A9.3}$$

When the value of ΔY_{TOTAL} is at least half of the required Y-Displacement, then the last calculated pipe length up to that point becomes the point of transition. Geometrical symmetry about this point allows that the actual Y-Displacement of the completed misalignment will be equal to two times the ΔY_{TOTAL} up to the transition spool piece plus the Y-Displacement of the spool piece itself, or

$$\begin{aligned} \text{Y-Displacement} = {} & (L + a)[2(\sin\Theta) + 2(\sin\Theta) + \ldots \\ & 2(\sin(P - 1)\Theta) + (L + a)[\sin P\Theta] \end{aligned} \tag{A9.4}$$

where P is the number of spool pieces to achieve the transition and is equal to one-half of the number of couplings involved in the total misalignment.

This expression is mathematically simplified to:

$$\text{Y-Displacement} = (L + a)[\sin P\Theta + 2\overset{P-1}{\underset{n=1}{}}\sin n\Theta]$$

When $n =$ the total number of couplings in the misalignment, and

$P = n/2$.

By using the same geometric and trigonomic relations, the distance in the X direction required for the misalignment is as follows:

$$P - 1$$

$$\text{X-Displacement} = (L + a)[\cos P\Theta + 2e\tau \cos n\Theta] \qquad (A9.5)$$

$$n = 1$$

Example A9.9 Pipe Misalignment. A designer wants to connect a NPS 6 (DN150) feed main from an existing building to a new structure. There is 66 in (1676 mm) of pipe run between the connection points, and it is expected that a settlement of 3 in (76.2 mm) will occur. To utilize the maximum deflection available from flexible coupling, cut grooved-pipe nipples will be used.

Requirements

Y-Displacement = 3 in (76.2 mm)

X-Displacement = less than 66 in (1676 mm)

Maximum pipe-end separation = 0.25 in (6.4 mm) (from coupling manufacturer performance data for flexible coupling)

Design pipe-end separation* = 0.188 in (4.8 mm)

1/2 pipe-end separation, a = 0.094 in (2.4 mm)

Maximum angle of deflection = 2° 10′ = 2.167° (from coupling manufacturer performance data for flexible coupling)

Design angle of deflection,* Θ = 1° 38′ = 1.625°

*Maximum values reduced by 25% for design and installation purposes. The published maximum pipe-end separation and angular deflection figures should be reduced by 50% for NPS 3/4–NPS 3½ (DN 20–DN 90) sizes, and 25% for NPS 4 and larger sizes.

Try: 4 couplings $(n = 4)\, P = n/2 = 2$

Spool lengths, $L = 12$ in

$a = 0.094$ in

$\Theta = 1.625°$

$$P - 1$$

$$\text{Y-Displacement} = (L + a)[\sin P\Theta + 2\sin n\Theta]$$

$$n = 1$$

$$= (12 + 0.094)\{\sin(2 \times 1.625) + 2$$

$$[\sin(1 \times 1.625]\}$$

$$= 12.094\,\{0.057 + 2(0.028)\} = 1.37 \text{ in}$$

Not enough; Y-Displacement of 3 in (76.2 mm) is required, so try 6 couplings:

$n = 6$

$P = n/2 = 3$

$L = 12$ in

$a = 0.094$ in

$\Theta = 1.625^\circ$

$$\text{Y-Displacement} = (12 + 0.094)\{\sin(3 \times 1.625) + 2\,[\sin(1 \times 1.625) + \sin(2 \times 1.625)]\}$$

$$= 12.094\,\{0.085 + 2[0.028 + 0.057]\} = 3.08 \text{ in}$$

Y-Displacement is sufficient (exceeds 3 in requirement).

Check: X-Displacement

$$\text{X-Displacement} = (L + a)[\cos P\Theta + \overset{P-1}{\underset{n=1}{2e\tau}} \cos n\Theta]$$

$n = 6$

$P = n/2 = 3$

$L = 12$ in

$a = 0.094$ in

$\Theta = 1.625^\circ$

$$= 12.094\,\{\cos(3 \times 1.625) + 2[\cos(1 \times 1.625) + \cos(2 \times 1.625)]\}$$

X-Displacement = 60.38 in (1533.7 mm)

X-Displacement is sufficient [less than 66 in (1676 mm) requirement]

With six NPS 6 (DN150) flexible couplings and five 12 in (300 mm) cut-groove pipe spools, the misalignment can be accommodated, attaining the required Y-Displacement in the limited X-Displacement.

Earthquake Design Considerations

Piping systems designed for earthquake prone areas must be analyzed for the movements and loads associated with these events. The grooved system provides many mechanical design features useful in systems subject to earthquake conditions. The inherent flexibility of flexible couplings acts to reduce the transmission of stresses throughout the piping system, and the resilient gasket aids to further reduce the transmission of vibration. Where flexibility is not desired, rigid couplings can be used.

As a general practice, seismic bracing and piping supports are utilized in piping systems to prevent excessive movement by controlling and directing system movement during a seismic occurrence which would result in overstressing the piping system. In a similar manner, piping supports for a grooved piping system must limit pipe movements such that they do not exceed the recommended allowable deflections and end loads. An excellent reference source, which covers these piping systems, is NFPA 13 Installation of Sprinkler Systems. This standard requires sprinkler systems to be protected to minimize or prevent pipe breakage where subject to earthquakes.

This is accomplished by using two techniques:

- Making the piping flexible where necessary by use of flexible couplings
- Affixing the piping to the building structure for minimum relative movement by using sway bracing

Flexibility is provided by using flexible couplings joining grooved end pipe and swing joints. ''Rigid-Type'' mechanical couplings, which do not permit movement at the grooved connection, are not considered flexible couplings. Rigid couplings are used in horizontal piping for purposes other than the requirements of earthquake protection. Where large pipe movements are anticipated, seismic swing joints are made up using flexible grooved couplings, pipe nipples and grooved elbows, as shown in Fig. A9.26.

Product Applications

The use of grooved piping systems has become widespread throughout the world. Applications of these joints come from all commercial, industrial, and municipal areas. Grooved joints are being used from NPS ¾ (DN 20) to NPS 100 (DN 2500). Applications are limited by the pressure, temperature, and system media. Each manufacturer of grooved piping joints has published pressure and temperature ratings of their various style couplings and gaskets. The piping system designer should consult this information to assure proper systems design.

The piping system designer can expect to find joints and gaskets available to accommodate temperatures from −30°F (−34°C) to 300°F (140°C) and pressures of up to 1000 psi (6900 kPa) and above. Materials of construction are normally ductile cast iron; however, couplings are also available in stainless steel, aluminum, and other castable materials, as special applications may require. Grooved systems can utilize pipe made of steel, stainless steel, aluminum, PVC, fiberglass, ductile iron and lined ductile iron, and steel, or any metallic or nonmetallic material that can be grooved.

Benefits of Grooved Piping Systems

Grooved piping systems offer a number of benefits when designed and installed properly.

- Grooved systems provide the designer the choice of flexible and rigid joints. The system can be designed to be flexible, allowing for expansion, contraction, and

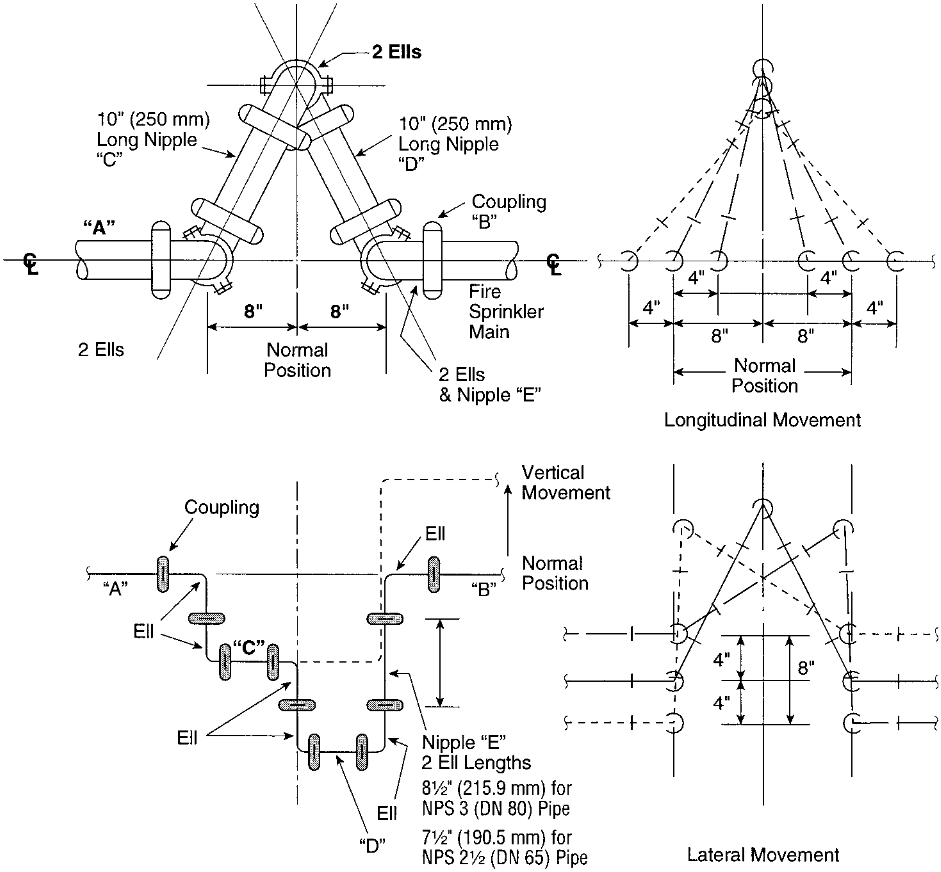
2 Ells
10" (250 mm)
Long Nipple
"C"
10" (250 mm)
Long Nipple
"D"
Coupling
"B"
"A"
℄
℄
Fire
Sprinkler
Main
8"
8"
Normal
Position
2 Ells
2 Ells
& Nipple "E"
4"
4"
4"
4"
8"
8"
Normal
Position
Longitudinal Movement
Vertical
Movement
Normal
Position
Coupling
"A"
"B"
Ell
Ell
"C"
Ell
Ell
Nipple "E"
2 Ell Lengths
8½" (215.9 mm) for
NPS 3 (DN 80) Pipe
7½" (190.5 mm) for
NPS 2½ (DN 65) Pipe
Ell
"D"
4"
4"
8"
Lateral Movement

FIGURE A9.26 Seismic swing joint.

structure settlement. Rigid couplings can be included in the system design to provide rigidity to minimize pipe supports.

- Grooved piping systems provide dampening of system vibration. The prevention of the transmission of objectionable vibration induced by piping systems to the building structure has become increasingly crucial, as vibration induced noise is a major complaint by building occupants.
- A properly designed grooved piping system will normally result in a lower installation cost to the facility owner. Piping is prepared rapidly through roll grooving. Installation is accomplished with simple hand tools and standard pipe-fitting techniques. Takeout dimensions for fittings and valves are consistent, thus pipes can be roll grooved at ground level and then lifted into place and coupled into the system. Where the designer chooses, piping can be prefabricated off site. In either case, installation is much more rapid when compared to welding or threading. In most cases, this speed of installation will result in a more cost-effective system.

- Where piping must be removed for replacement or maintenance, the grooved system should be the system of choice. With each joint becoming a *union*, a grooved system is the easiest and quickest piping system to service. Flanges for the same size pipe have many more bolts to remove and replace, and a new gasket is always needed. A grooved coupling is removed more rapidly because it has fewer bolts. The bolts and gasket are readily reusable unless they have been damaged.

CHAPTER A10

PART 1 SELECTION AND APPLICATION OF VALVES

Mohinder L. Nayyar, P.E.
ASME Fellow

INTRODUCTION

Valves are an essential part of any piping system that conveys liquids, gases, vapors, slurries and mixtures of liquid, and gaseous phases of various flow media. Starting with primitive means for stopping, allowing, or diverting water-flow from a source through shallow or deep channels, such as wooden or stone wedges stuck between the edges of a water passage, man has developed several different types of simple and sophisticated valve designs. Different types of valves include: gate, globe, check, ball, plug, butterfly, diaphragm, pinch, pressure relief, and control valves. Each of these types has several categories and designs, each offering different features and functional capabilities. Some valves are self-actuated while others are manually operated or have actuators that are powered with electric motors, are pneumatic or hydraulic, or a combination to operate the valve. Valves are manufactured with metals and nonmetals. Valves are used in industrial piping systems, transportation and distribution pipelines, building services piping, civic facilities, and irrigation piping systems. The piping systems of industrial, commercial, residential, and other civic facilities carry the lifeblood of modern civilization, like arteries and veins. And the valves in those piping systems serve the functions of allowing, stopping, regulating, and controlling the flow, to fulfill the intended objectives of the system. When fluid pressure builds up beyond a set limit, the valves relieve the overpressure to safeguard the integrity of the piping system or a component. Valves help in maintaining or breaking a vacuum. Valves also assist in maintaining the pressure or temperature of the flow medium within the desired range or limit. In order to select a suitable valve for a particular application, the user must evaluate the valve characteristics, including the design features, materials of construction, and performance, in light of specific application requirements: flow medium, process design requirements, piping design criteria, and economic factors. This chapter provides a brief discussion of topics considered in the selection and application of commonly used valves.

VALVE TERMINOLOGY

Actuator: A device that operates a valve by utilizing electricity, pneumatics, hydraulics, or a combination of one or more of these energies. Sometimes actuators are referred to as *operators.* In this chapter, the word operator will be used for a person who operates any equipment, machine, plant, or system.

Ambient conditions: The pressure and temperature of the environment surrounding a valve.

Backflow: The flow that occurs in the opposite direction of the normal or expected fluid flow.

Back pressure: The static pressure existing at the outlet of a pressure-relief device due to pressure in the discharge system.

Backseat: A seat on the bonnet or bonnet bushing which contacts a corresponding seating surface of the stem or disc holder when the stem is fully retracted. It provides a seal between the stem and the inside of the bonnet. It prevents leakage of flow medium and allows replacement of valve packing while the valve is open and under pressure.

Block-and-bleed valve: A valve with two seating surfaces which provide simultaneous blockage of flow from both valve ends, and means for draining or venting the cavity between the seating surfaces. When the valve is closed (blocked) the drain is opened, allowing the trapped fluid between the seats to drain (bleed).

Block valve: A valve that is used to start or stop the flow. It is also referred to as an *on-off valve.*

Blowdown: The difference between the set pressure and the disc-reseating pressure of a pressure-relief valve, which is expressed as a percentage of the set pressure.

Blowdown valve: A valve used to release the pressurized contents of a pressure vessel or piping.

Bonnet: A valve body closure component that contains an opening for the stem.

Bore: The diameter of the smallest opening through a valve. It is also called *port.*

Bubble tight: A valve is termed *bubble tight* when the upstream side of the valve is pressurized with air and the downstream side is filled with water and no air bubbles are detected on the downstream side with the valve in fully closed position.

Bypass: A piping loop provided to permit flow around the flow control element (disc, plug, etc.) of a valve in its closed position. A stop valve installed in the bypass loop is called the *bypass valve.*

Cavitation: This occurs when the fluid pressure at the *vena contracta* falls below the vapor pressure, followed by pressure recovery above the vapor pressure. The pressure below vapor pressure causes vapor bubbles to form, which then collapse as the pressure recovers. Collapsing bubbles can cause erosion of valve and downstream pipe metal surfaces. The phenomena of fluid pressure falling below and recovering above vapor pressure, combined with forming and collapsing of bubbles, is termed *cavitation.*

Chatter: Abnormal rapid reciprocating motion of the movable parts of a pressure-relief valve in which the disc contacts the seat.

Choked flow: When the flow rate cannot be increased even if the downstream pressure is decreased. In liquid applications, it is caused by vapor bubbles, formed by cavitation or flashing, choking the flow passage. In the case of gases, choked flow is caused when the flow velocity reaches sonic proportions and a reduction in downstream pressure cannot increase the gas flow.

Closing pressure: The pressure equal to the valve of decreasing inlet static pressure at which the valve disc reestablishes contact with the seat or at which lift becomes zero.

Coefficient of discharge: The ratio of the measured relieving capacity to the theoretical relieving capacity of a pressure-relief valve.

Coefficient of flow: The flow rate that passes through the fully open valve at unit pressure differential. It is measured in gal (3.8 liters) per minute of 60°F (16°C) water with 1 psi (6.9 kPa) pressure differential. It is also referred to as *flow coefficient* or *valve coefficient.*

Cold working pressure (CWP): This is the maximum flow-medium pressure at the ambient temperature to which the valve may be subjected during normal service. This is also referred to as *water-oil-gas* (WOG) rating.

Control valve: A valve serving as a control element in a system, providing means for varying the rate of flow of the fluid passing through the valve.

Cracking pressure: The upstream fluid pressure at which a closed check valve starts to open and allow the flow through the valve.

Cryogenic valve: A valve used in applications with fluid temperatures below −50°F (−45°C). A cryogenic valve is provided with an extended stem contained in an extension tube so that the valve packing and operator remain at ambient temperature when the cryogenic fluid is in the valve body. The valve is oriented so that the packing is at a higher elevation than the valve body. It allows a vapor-gas pocket to form inside the extension tube, thereby making the extension tube more effective at insulating the packing from cryogenic fluid cold temperature.

Disc: The part of the valve which is positioned in the flow stream to permit or to obstruct flow, depending on closure position. In specific designs, it may also be called a wedge, plug, ball, gate, or other functionally similar expression. In international standards it is referred to as obturator.

Double-disc: A two-piece disc or two separate discs that mate with two seating surfaces. Double discs are used in some designs of gate valves.

Double-seated valve: A valve with two separate seating surfaces that come in contact with two separate seating surfaces of a disc or a double disc.

Flow characteristic: Defines the relationship between the Flow Coefficient and the valve *stroke.*

Flow coefficient: See *Coefficient of flow.*

Flow control element: The part of the valve that allows, stops, obstructs, and controls the fluid flow through the valve. See *Disc.*

Fugitive emission: The amount of leakage of hazardous and toxic flow medium (fluids) from a valve to the environment.

Full bore: When valve *bore (port)* is approximately of the same size as the inside diameter of the connecting pipe, it is called *full bore (full port).*

Fully stellited: A valve is termed fully stellited when seating surfaces of the valve seat(s) and the disc(s) are hard faced with wear and corrosion-resistant material (*Stellite* or other such material).

Half stellited: A valve is termed half stellited when only the seating surfaces of the valve seat(s) are hard faced with wear and corrosion-resistant material (Stellite or other such material).

Hard facing: Application or deposit of hard, wear, and corrosion-resistant material on soft surfaces subject to wear.

Inside screw–nonrising stem (ISNRS): Threads on the stem are inside the valve body. The valve disc travels up and down the stem threads when the stem is rotated. Stem does not rise.

Inside screw–rising stem (ISRS): Threads on the stem are inside the valve body and exposed to the flow medium. The stem rises when it is rotated, thus opening the valve. Position of the stem indicates the position of the valve disc.

Iron body–bronze mounted (IBBM): A valve having cast iron body and bronze trim.

Lantern ring: A spacer ring used in the *lantern ring* type of packing chamber to permit lubrication of the packing, purging of the shaft or stem, or a leak-off system.

Leak-off connection: A pipe or tube connected to a hole in the stuffing box at the level of lantern ring. It is used to collect leakage past a lower set of lantern ring–type of packing or to inject lubricant into the stuffing box.

Linear-flow characteristics: A flow characteristic of the valve when the flow is directly proportional to the position of the flow control element.

Liner: Lining of protective materials applied on the inside surfaces of valve body (or valve trim) to enhance resistance to corrosion, erosion, or contamination.

Nonreturn valve: Stop-check valve, a check valve in which the closure member can be mechanically closed.

Nonrising stem: Refer to *Inside screw, nonrising stem (ISNRS).*

Outside-screw-and-yoke (OS&Y): A valve design in which the threaded portion of the stem is outside the pressure boundary of the valve. The valve bonnet has a yoke, which holds a nut through which the rotating stem rises as the valve is opened. The stem part inside the valve is smooth and is sealed so that stem threads are isolated from the flow medium.

Pilot operated pressure relief valve: A pressure-relief valve in which the major relieving device is combined with and controlled by a self-actuated auxiliary pressure-relief valve.

Port: See *bore.*

Power actuated pressure-relief valve: A pressure-relief valve in which the major relieving device is combined and controlled by a device requiring an external source of energy.

Quarter-turn valve: A valve whose closure member rotates approximately a quarter turn (90°) to move from full-open to full-closed position.

Reduced port: Valve port smaller than the inside diameter of the end-connecting pipe. It is approximately equal to the inside diameter of the one pipe size smaller than the end size for gate valves, and 60 percent of full bore on ball valves.

Regular port: A valve port smaller than the full bore, approximately 75 to 90 percent of full bore on ball valves and 60 to 70 percent on plug valves.

Relief valve: A pressure-relief valve actuated by inlet static pressure and having a gradual lift generally proportional to the increase in pressure over the opening pressure (set pressure).

Rotary motion valve: A valve that involves a quarter-turn motion to open or close the valve closure element.

Rupture disc: A nonclosing pressure-relief device actuated by inlet static pressure and designed to function by the bursting of a pressure-containing disc.

Safety-relief valve: A pressure-relief valve characterized by rapid opening pop action, or by opening generally proportional to the increase in pressure over the opening pressure.

Safety valve: A pressure-relief valve actuated by inlet static pressure and characterized by rapid opening or pop action.

Seat: The portion of the valve against which the closure member presses to effect shutoff.

Seat ring: A separate piece inserted in the valve body to form a seat against which the valve-closure member engages to effect shut-off.

Set pressure: The inlet static pressure of the system at which a relief valve starts to open, or safety valve pops open.

Short pattern valve: A valve that has face-to-face or end-to-end dimension for a short pattern design according to standard ASME B16.10.

Steam working pressure (SWP): The maximum rated or working pressure corresponding to the steam temperature that must not be exceeded when valve is used in steam service. It is marked with S, SP, or SWP on the valve.

Stroke: The amount of travel the valve-closure member is capable of from a fully closed position to a fully open position or vice versa. In linear-motion valves it is expressed in in (mm) and in degrees, 0 to 90, for rotary motion valves.

Throttling: The process of regulating the fluid flow rate or pressure by controlling the position of the closure member between the full-open and full-closed positions.

Trim: Functional parts of a valve which are exposed to the line fluid. Usually refers to the stem, closure member and, seating surfaces. The removable or replaceable valve metal internal parts that come in contact with the flow medium are collectively known as valve trim. Valve parts such as body, bonnet, yoke, and similar items are not considered trim.

Venturi port: A valve bore or port that is substantially smaller than the full port, approximately 40 to 50 percent of full port. It is normally found in plug valves.

Wafer body: A valve body that has a short face-to-face dimension in relation to pipeline diameter and is designed to be installed between two flanges using special length studs and nuts.

Wedge: A gate valve–closure member with inclined sealing surfaces which come in contact with valve-seating surfaces that are inclined to the stem centerline. Wedge is available in solid, split, and flex designs.

Yoke: That part of the valve assembly used to position the stem nut or to mount the valve actuator.

Yoke bushing, yoke nut: Yoke nut, yoke bushing, or *stem nut* is the valve part that is held in a recess at the top of the yoke through which the stem passes. It converts rotary-actuating effort into thrust on the valve stem.

REFERENCE CODES AND STANDARDS

The following is a list of commonly used valve standards in the United States. Based upon the scope, each of these standards contains rules and requirements for design, pressure-temperature ratings, dimensions, tolerances, materials, nondestructive examinations, testing, and inspection and quality assurance. Compliance to these and other standards is invoked by reference to codes of construction, specifications, contracts, or regulations.

ASME Standards

B16.10	Face-to-Face and End-to-End Dimensions of Valves
B16.33	Manually Operated Metallic Gas Valves for Use in Gas Piping Systems Up to 125 psig (Sizes ½ Through 2)
B16.34	Valves—Flanged, Threaded, and Welding End
B16.38	Large Metallic Valves for Gas Distribution (Manually Operated, NPS 2½ to 12, 125 psig Maximum)
B16.40	Manually Operated Thermoplastic Gas Shutoffs and Valves in Gas Distribution Systems
B16.44	Manually Operated Metallic Gas Valves for Use in House Piping Systems
N278.1	Self-Operated and Power-Operated Safety-Related Functional Specification Standard

ASME Performance Test Code

PTC 25.3	Safety and Relief Valves

ANSI Guides/Manuals

1003	Performance Requirements for Water Pressure Reducing Valves for Domestic Water Supply Systems
1029	Performance Requirements for Water Supply Valves; Mixing Valves and Single Control Mixing Valves
1032	Performance Requirements for Dual Check Valve Type Backflow Preventers for Carbonated Beverage Dispensers

AWWA Standards and Specifications

C500-93	Metal-Seated Gate Valves for Water Supply Service
C501-92	Cast-Iron Sluice Gates

C504-94	Rubber-Seated Butterfly Valves
C507-91	Ball Valves, 6 in Through 48 in (150 mm Through 1200 mm)
C508-93	Swing Check Valves for Waterworks Service
C509-94	Resilient-Seated Gate Valves for Water Supply Service
C510-92	Double Check Valve Backflow Prevention Assembly
C511-92	Reduced Pressure Principle Backflow Prevention Assembly
C512-92	Air-Release, Air-Vacuum, and Combination Air Valves for Waterworks Service
C540-93	Power-Actuating Devices for Valves and Sluice Gates
C550-90	Protective Epoxy Interior Coatings for Valves and Hydrants

ARI (Air-Conditioning and Refrigeration Institute) Standards

720	Refrigerant Access Valves and Hose Connectors
760	Solenoid Valves for Use with Volatile Refrigerants
770	Refrigerant Pressure Reducing Valves

ASSE (American Society of Sanitary Engineers) Standards

1001	Performance Requirements for Pipe Applied Atmospheric Type Vacuum Breakers.

Standards 1003, 1029 and 1032 are listed as ANSI Guides/Manuals above.

American Petroleum Institute (API) Specifications

6D-94	Specification for Pipeline Valves (Gate, Plug, Ball, and Check Valves)
6FA-94	Specification for Fire Test for Valves
6FB-92	Specification for Fire Test for End Connections
6FC-94	Specification for Fire Test for Valves with Automatic Backseats
6FD-95	Specification for Fire Test for Check Valves

14A-94	Specification for Subsurface Safety Valve Equipment
14D-94	Specification for Wellhead Surface Safety Valves and Underwater Safety Valve for Offshore Service

API Standards

526-95	Flanged Steel Pressure Relief Valves
527-91	Seat Tightness of Pressure Relief Valves
589-93	Fire Test for Evaluation of Valve Stem Packing
594-91	Wafer and Wafer-Lug Check Valves
598-90	Valve Inspection and Testing
599-94	Metal Plug Valves–Flanged and Welding Ends
600-91	Steel Gate Valves–Flanged and Butt-Welding Ends
602-93	Compact Steel Gate Valves—Flanged, Threaded, Welding, and Extended-Body Ends
603-91	Class 150, Cast, Corrosion-Resistant, Flanged-End Gate Valves
607-93	Fire Test for Soft-Seated Quarter-Turn Valves
608-95	Metal Ball Valves—Flanged, Threaded, and Welding Ends
609-91	Lug- and Wafer-Type Butterfly Valves

The International Society for Measurement and Control (ISA) Recommended Practices (RP)

RP 75.06-81	Control Valve Manifold Design
RP 75.18-89	Control Valve Position Stability
RP 75.21-89	Process Data Presentation for Control Valves

Standards

S75.01-85	Flow Equations for Sizing Control Valves
S75.02-88	Control Valve Capacity Test Procedure
S75.03-92	Face-to-Face Dimensions for Integral Flanged Globe-Style Control Valve Bodies

S75.04-95	Face-to-Face Dimensions for Flangeless Control Valves
S75.05-83	Control Valve Terminology
S75.07-87	Laboratory Measurement of Aerodynamic Noise Generated by Control Valves
S75.08-85	Installed Face-to-Face Dimensions for Flanged Clamp or Pinch Valves
S75.11-85	Inherent Flow Characteristics and Rangeability of Control Valves
S75.12-93	Face-to-Face Dimensions for Socket Weld-End and Screwed-End Globe-Style Control Valves
S75.14-93	Face-to-Face Dimensions for Buttweld-End Globe-Style Control Valves (ANSI Classes 150, 300, 600, 900, 1500, and 2500)
S75.16-94	Face-to-Face Dimensions for Flanged Globe-Style Control Valve Bodies (ANSI Classes 900, 1500, and 2500)
S75.17-89	Control Valve Aerodynamic Noise Prediction
S75.19-89	Hydrostatic Testing of Control Valves (Formerly ASME/ANSI B16.37–80)
S75.20-91	Face-to-Face Dimensions for Separable Flanged Globe-Style Control Valves (ANSI Classes 150, 300, and 600)
S75.22-92	Face-to-Face Dimensions for Flanged Globe-Style Control Valve Bodies (ANSI Classes 150, 300, and 600)

MSS Standards

MSS-SP-6	Standard Finishes for Contact Faces of Pipe Flanges and Connecting-End Flanges of Valves and Fittings
MSS-SP-25	Standard Marking System for Valves, Flanges and Fittings
MSS-SP-42	Class 150 Corrosion Resistant Gate, Globe, Angle, and Check Valves with Flanged and Butt Weld Ends
MSS-SP-45	Bypass and Drain Connection Standard
MSS-SP-53	Quality Standard for Steel Castings and Forgings for Valves, Flanges, and Fittings and Other Piping Components—Magnetic Particle Examination Method

MSS-SP-54	Quality Standard for Steel Castings and Forgings for Valves, Flanges, and Fittings and Other Piping Components—Radiographic Examination Method
MSS-SP-55	Quality Standard for Steel Castings and Forgings for Valves, Flanges, and Fittings and Other Piping Components—Visual Method
MSS-SP-60	Connecting Flange Joint Between Tapping Sleeves and Tapping Valves
MSS-SP-61	Pressure Testing of Steel Valves
MSS-SP-67	Buttefly Valves
MSS-SP-68	High Pressure-Offset Seat Butterfly Valves
MSS-SP-70	Cast Iron Gate Valves, Flanged and Threaded Ends
MSS-SP-71	Cast Iron Swing Check Valves, Flanged and Threaded Ends
MSS-SP-72	Ball Valves with Flanged or Butt-Welding Ends for General Service
MSS-SP-78	Cast Iron Plug Valves, Flanged and Threaded Ends
MSS-SP-80	Bronze Gate, Globe, Angle and Check Valves
MSS-SP-81	Stainless Steel, Bonnetless, Flanged Knife Gate Valves
MSS-SP-82	Valve Pressure Testing Methods
MSS-SP-84	Valves—Socket-Welding and Threaded Ends
MSS-SP-85	Cast Iron Globe & Angle Valves, Flanged and Threaded Ends
MSS-SP-86	Guidelines for Metric Data in Standards for Valves, Flanges, Fittings and Actuators
MSS-SP-88	Diaphragm Type Valves
MSS-SP-91	Guidelines for Manual Operation of Valves
MSS-SP-92	MSS Valve User Guide
MSS-SP-93	Quality Standard for Steel Castings and Forgings for Valves, Flanges, and Fittings and Other Piping Components—Liquid Penetrant Examination Method
MSS-SP-94	Quality Standard for Steel Castings and Forgings for Valves, Flanges, and Fit-

	tings and Other Piping Components—Ultrasonic Examination Method
MSS-SP-96	Guidelines on Terminology for Valves and Fittings
MSS-SP-98	Protective Epoxy Coatings for the Interior of Valves and Hydrants
MSS-SP-99	Instrument Valves
MSS-SP-100	Qualification Requirements for Elastomer Diaphragms for Nuclear Service Diaphragm Type Valves
MSS-SP-101	Part–Turn Valve Actuator Attachment—Flange and Driving Components Dimensions and Performance Characteristics
MSS-SP-102	Multi-Turn Valve Actuator Attachment—Flange and Driving Component Dimensions and Performance Characteristics
MSS-SP-105	Instrument Valves for Code Applications
MSS-SP-108	Resilient Seated-Eccentric Cast Iron Plug Valves

Refer to Chapter A.4 of this handbook for additional information on codes of construction and other standards. See App. E.10 for a listing of British, DIN, Japanese, and ISO codes, standards, and specifications related to piping, valves, flanges, fittings, and bolting.

CLASSIFICATION OF VALVES

The following are some of the commonly used valve classifications:

Classification Based on Mechanical Motion

Based on the mechanical or cyclical motion of the valve closure member, valves are classified as follows:

Linear Motion Valves. The valves in which the closure member, as in gate, globe, diaphragm, pinch, and lift check valves, moves in a straight line to allow, stop, or throttle the flow. Table A10.1 lists the valves based on motion of valve-closure member.

Rotary Motion Valves. When the valve-closure member travels along an angular or circular path, as in butterfly, ball, plug, eccentric- and swing check valves, the valves are called rotary motion valves. See Table A10.1.

TABLE A10.1 Classification of Valves Based on Motion

Valve type	Linear motion	Rotary motion	Quarter turn
Gate valve	X		
Globe valve	X		
Swing check valve		X	
Lift check valve	X		
Tilting-disc check valve		X	
Folding-disc check valve		X	
In-line check valve	X		
Stop check valve	X	X	
Ball valve		X	X
Pinch valve	X		
Butterfly valve		X	X
Plug valve		X	X
Diaphragm valve	X		
Safety valve	X		
Relief valve	X		

Notes: Tilting-disc check valves are in the same category as swing check valves in regard to motion of the disc.

When a swing check valve is provided with the external means to close and maintain the valve disc in a closed position, it can be used as a stop check valve.

Quarter Turn Valves. Some rotary motion valves require approximately a quarter turn, 0 through 90°, motion of the stem to go to fully open from a fully closed position or vice versa. Refer to Table A10.1.

Classification Based on Valve Size

Valve Size. Valve size is denoted by the nominal pipe size (NPS), which is equal to the size of valve-connecting ends or the flange-end size. In the metric system, valve size is designated by the nominal diameter (DN) of connecting pipe or the connecting flange ends. When a valve is installed with reducers on each end, the size of the valve will be equal to the size of the reducer-connecting ends attached to the valve. The valve size is not necessarily equal to the inside diameter of the valve.

It is a normal industry practice to categorize valves, based upon size, in two classification: small and large.

Small Valves. NPS 2 (DN 50) and smaller valves are called small valves. At times, NPS 2½ (DN 65) and smaller valves are referred to as small valves. As such, the size classification can vary and, therefore, it should not be considered a uniform industry practice.

Large Valves. NPS 2½ (DN 65) and larger valves are classified as large valves. As indicated earlier, NPS 2½ (DN 65) valves may be designated as small valves, depending on the criteria used in classifying small valves.

Classification Based on Pressure-Temperature Rating

Class Ratings. Pressure-temperature ratings of valves are designated by class numbers. Based on the material(s) of construction, the pressure-temperature ratings for each class are tabulated to provide the maximum allowable working pressures, expressed as gauge pressures, at the temperature shown. The temperature shown

TABLE A10.2 ASME B16.34 Classification of Valves and Limitations

Class	150	300	400	600	900	1500	2500	4500[1]
Standard[2]	X	X	X	X	X	X	X	X
Special[3]	X	X	X	X	X	X	X	X
Limited[4,5]	X	X	X	X	X	X	X	X
Intermediate[6]	X	X	X	X	X	X	X	X
Butt welding	X	X	X	X	X	X	X	X
Socket welding[4,7]	X	X	X	X	X	X	X	X
Flanged[8]	Std	Std	Std	Std	Std	Std	Std	
Threaded[4,7,9]	X	X	X	X	X	X	X	

[1] Class 4500 applies only to welding end valves.

[2] Valves conforming to the requirements of ASME B16.34, for standard class valves. Ratings shall not exceed the values shown in those Tables 2 having an identifying suffix "A." (ASME B16.34).

[3] Threaded or welding-end valves which have successfully passed the examination required by Section 8 (of ASME B16.34) may be designated Special Class valves. Ratings shall not exceed the values shown in those Tables 2 having an identifying Suffix "B." (ASME B16.34). Special Class ratings shall not be used for flanged-end valves.

[4] Welding- or threaded-end valves in sizes NPS 2-1/2 and smaller that conform to the requirements of Annex G (ASME B16.34) may be designated Limited Class valves. Limited Class ratings shall not be used for flanged end valves.

[5] Threaded-end valves rated above Class 2500 and socket-end valves rated above Class 4500 are not within the scope of ASME B16.34.

[6] A welding- or threaded-end valve may be assigned an intermediate pressure and temperature rating or Class, either Standard or Special, in accordance with paragraph 6.1.4 of ASME B16.34, provided all applicable requirements of this standard are met.

[7] Threaded and socket-welding-end valves larger than NPS 2-1/2 are beyond the scope of ASME B16.34.

[8] Flanged-end valves shall be rated as Standard Class.

[9] A class designation greater than Class 2500 or a rating temperature greater than 1000°F applied to threaded-end valves is beyond the scope of ASME B16.34.

TABLE A10.3 Valves Covered by MSS Standards

MSS Standard	Rating/class	Valve types	Size (NPS)	Material
MSS SP–42 Class 150 Corrosion Resistant Gate, Globe, Angle, and Check Valves with Flanged and Butt-Weld Ends	Class 150	a. Gates, (OS&Y)[1]	a. NPS ¼–24	A351; CF8, CF8M, CF8C, CF3, CF3M Alloy 20, CN7M A182 A240 A276 A479
		b. Globes, tee-, wye-pattern and angle, (OS&Y)	b. • NPS ¼–24 Globe and angle ■ NPS ½–24 wye-Pattern Globe	
		c. Check, lift, swing and wye-pattern	c. • NPS ¼–24 Lift check ■ NPS ½–24 Swing check	
MSS SP–67 Butterfly Valves	a. Class 25, 125, 150, 300, 400, 600, 900, 1500, 2500	a. Flangeless (wafer type), Single flange (lug type), and flanged-end valves	a. NPS 1½–72	Bronze (B16.24) Cast Iron (B16.1) Ductile Iron (B16.42) Materials per ASME B16.34
	b. Class[2] C606 rating	b. Grooved-end and shouldered-end valves	b. Pressure rating per ASME B16.34, B16.1, B16.24, B16.42, B16.47	
MSS SP–68 High-Pressure Butterfly Valves with Offset Design	ASME B16.34 ratings	Wafer, lug type	NPS 3–24 (DN 80–600) NPS 30–48 (DN 750–1200)	A126, Class B Brass Or Bronze
MSS SP–70 Cast-Iron Gate Valves, Flanged and Threaded Ends	125, 250 and 800 Hydraulic	Type I—Solid-wedge disc Type II—Split-wedge disc Type III—Double disc, parallel seat	a. NPS 2–48, flanged end b. NPS 2–6, threaded end	A126, Class B Brass Or Bronze
MSS SP–71 Gray-Iron Swing Check Valves, Flanged and Threaded Ends	125 and 250	Type I—Full waterway, metal to metal seats[3] Type II—Full waterway, composition to metal seats Type III—Clear waterway, metal to metal seats Type IV—Clear waterway, composition to metal seats	a. 2–24 (DN 50–600) flanged end b. 2–6 (DN 50–150)[4] threaded end	A126, Class B trim: Bronze Cast Iron Stainless Steel
MSS SP–72 Ball Valves with Flanged or Butt-Welding Ends for General Service	150, 300, 400, 900 per ASME B16.24 and ASME B16.5 150 & 300 per ASME B16.42	Ball valves Full port Regular port Reduced port	½ through 36	Carbon steel, alloy steel, stainless steel, ductile iron and bronze
MSS SP–78 Cast-Iron Plug Valves, Flanged and Threaded Ends	125, 250 and 800	Plug valves Flanged Threaded Lubricated Nonlubricated	• NPS 2–2 Flanged • NPS 2–6 Threaded	A126, A48, B62, B584, A47, A536, A197, A283

TABLE A10.3 Valves Covered by MSS Standards (Continued)

MSS Standard	Rating/class	Valve types	Size (NPS)	Material
MSS SP–80 Bronze Gate, Globe, Angle, and Check Valves	a. 125, 150, 200, 300, and 350	a. Threaded and soldered ends	a. Threaded ends—⅛–3 Soldered ends—¼–3	Bronze B61, B62, B124, B584, B371, B99, B16, B140, A494
	b. 150 and 300	b. Flanged ends	b. Flanged ends—½–3	
MSS SP–81 Stainless-Steel, Bonnetless, Flanged Knife-Gate Valves	Valves for pressure not exceeding 150 psig @ temperature 32 to 150° F	Bonnetless, flanged knife-gate valves	2–24	Stainless steel or stainless-lined cast or fabricated A290, A351, A276, A743, A216, B62, A126
MSS SP–85 Cast-Iron Globe and Angle Valves, Flanged and Threaded Ends	125 and 250	Globe, angle, threaded, and flanged	NPS 2–12 flanged NPS 2–6 threaded	Cast iron A126, Class B
MSS SP–88 Diaphragm Type[5] Valves	Cat. A, 125 and 150 Cat. B ½–1 (200 psig) 1¼–2 (175 psig) 2½–4 (150 psig) 5 & 6 (125 psig) 8 (100 psig) 10 & 12 (65 psig) 14 & 16 (50 psig) Cat. C, Mfr. rating	Diaphragm type valves	½–16	Bronze B62 Cast iron A126, C1.B Malleable iron A47 Carbon steel A216, WCB Stainless steel A351 Ductile iron A395 Aluminum B26
MSS SP–99 Instrument Valves[6]	10,000 psi and lower @ 100°F	Valves needle, packless, ball, plug, check, and manifold	1 in and smaller	Steel and alloy Materials per ASME B16.34
MSS SP–105 Instrument Valves[6] for Code Applications	10,000 psi and lower @ 100°F	Valves needle, packless, ball, plug, check, and manifold	1 in and smaller	Steel and alloy Materials per ASME B16.34, B31.1, B31.3 ASME Section III
MSS SP–108 Resilient–Seated Cast-Iron, Eccentric Plug Valves	• 175 psig CWP[7], (NPS –112) • 150 psig CWP (NPS 14–72)	Plug valves, flanged, threaded, mechanical joint or grooved-end connection	3–72	Cast iron A126, Class B A48, Class 40 A536

[1] Outside screw and yoke.

[2] Valve ends shall conform to ANSI/AWWA C-606.

[3] Refer to figures in MSS SP–71.

[4] For equivalent metric (DN) sizes, refer to App. E2, E2M, and Table A1.1 (Chapter A1).

[5] Tables and annexes referenced are the ones in the standard.

[6] The application of valve type, size, rating, material of construction, and suitability for service are the responsibility of the purchaser and are outside the scope of this standard.

[7] Cold working pressure.

for a corresponding pressure rating is the temperature of the pressure-containing shell of the component. Items such as a piping system or a portion thereof, a pump, tank, heat exchanger, pressure vessel, valves, et cetera are considered components.

ASME B16.34, Valves—Flanged, Threaded, and Welding End is one of the most widely used valve standards. It defines three types of classes: standard, special, and limited. ASME B16.34 covers Class 150, 300, 400, 600, 900, 1500, 2500, and 4500 valves. It also allows valves to be classified as intermediate whose pressure-temperature ratings may fall within those listed for the standard and special class valves. See Table A10.2 for valve classifications and their limitations covered by ASME B16.34. Refer to Table A1.2 in Chapter A1 for metric equivalent (PN) of valve classifications.

Tables A10.3 and A10.4 provide a listing of valve classes covered by various commonly used valve standards published by the Manufacturers Standardization Society (MSS) and the American Petroleum Institute (API). Table A10.5 provides a brief summary of valves covered by AWWA standards.

Cold Working Pressure (CWP) Rating. Valves are also rated by the CWP rating. This rating represents the maximum allowable working pressure at the ambient temperature to which the valve may be subjected in normal service. Sometimes it is referred to as cold rating. The pressure rating of a valve at −20 to 100°F (−29 to 38°C), as listed in ASME B16.34 and other valve standards, is considered cold working pressure (CWP) or cold rating. CWP is also designated as the water-oil-gas (WOG) rating. Valves marked with CWP or WOG rating are primarily intended for applications in which the flow medium is maintained at ambient temperature, such as, but not limited to, water, oil, and gas distribution and transmission systems.

NFPA Rating. Valves to be used in fire protection systems in the United States are required to be rated for fire service. These valves are rated for 175 and 250 psi (1210 and 1725 kPa), and they are designated as UL (Underwriters Laboratories) listed and FM (Factory Mutual) approved. A valve rated for 175 psi (1210 kPa) for fire protection service may also be rated for higher pressure marked as CWP or Water Working Pressure (WWP) for general service. As such, a fire-rated valve may be used at pressures higher than fire service rating in applications termed as general service.

General Service Rating. The general service rating may be considered to be the equivalent of the CWP rating. Some valve manufacturers assign two ratings, fire rating and general service rating, to a valve. A UL-listed and FM-approved valve rated for 175 psig (1210 kPa) may have a general service rating of 400 psig (2760 kPa) at ambient temperature. It means that this valve can be used in a fire protection system having a maximum allowable working pressure of 175 psi (1210 kPa) or less, whereas it can be used in other services termed as general services and be subjected to a maximum allowable working pressure of 400 psig (2760 kPa). One must classify the service in accordance with the code of construction, as required. If the service does not fall within the jurisdiction of a code, then prudent engineering judgment may be followed in selecting the valve.

Steam Working Pressure (SWP) Rating. The SWP rating of a valve is intended to define the maximum working pressure corresponding to the steam temperature. A valve assigned a SWP rating must not be used in steam service at pressures and temperatures exceeding the rating.

Dual or Multiple Ratings. A valve may be assigned one or more ratings by the valve manufacturer. Ratings assigned must be marked on the valve. The marking

TABLE A10.4 Valves Covered by API Standards

API Standard	Rating/class	Valve types	Size	Materials
API Standard 526 Flanged Steel–Pressure Relief Valves	150, 300, 600, 900, 2500	a. Spring loaded	a. Table 2–15 for spring-loaded Valves	SA 216, Gr. WCB SA 217, Gr. WC SA 351, Gr. CF8M
		b. Pilot-operated pressure relief valves (PORV)	b. Table 16–29 for PORV	
API Standard 599 Metal Plug Valves, Flanged, and Welding Ends	150, 300, 400, 600, 900, 1500 and 2500 per ASME B16.34	Plug valves with flanged or butt-welding ends	NPS 1–24	Ductile iron (B16.42) A395, A126 and ASME B16.34 materials
API Standard 600 Steel Gate, Valves—Flanged and Butt-Welding Ends, Bolted, and Pressure-Seal Bonnets	150 through 2500	Gate valves	NPS 1–24	Material listed in ASME B16.34 A182, A217, A276, A351, A439, B473
API Standard 602 Compact Steel Gate Valves-Flanged, Threaded, Welding, and Extended-Body Ends	• Threaded-end, socket-welded end, or extended-body valves 800 or 1500 • Flanged end valves 150, 300, 600, or 1500 • Butt-welded end valves 150, 300, 600, 800, 1500	Gate valves a. Flanged and butt-welding	a. NPS 4 and smaller	A105, A106, A182, A216, A217, A276, A312, A333, A335, A350, A351, A352, A582, B473
		b. Threaded and socket-welding	b. NPS 2½ and smaller	
API Standard 594 Check Valves: Wafer, Wafer-Lug, and Double-Flanged Type	a. Class 125 and 250 b. Class 150 & 300 c. Class 400 & 600 d. Class 900 & 1500 e. Class 2500	Check valves	a. NPS 2–48 b. NPS 2–60 c. NPS 2–42 d. NPS 2–24 e. NPS 2–12	A182, A217, A351, A494, B473, B564
API Standard 603 Class 150, Cast, Corrosion-Resistant, Flanged-End Gate Valves	150	Gate valves	NPS ½–12	ASME B16.34 Group 2 or 3 materials
API Standard 608 Metal Ball Valves—Flanged, Threaded, and Welding-End	a. 150 and 300	a. Butt-welding or flanged ends	a. NPS ½–12	Per ASME B16.34
	b. 150, 300, and 600	b. Threaded or socket-welding ends	b. NPS ½–2	
API Standard 609 Butterfly Valves: Double-Flanged, Lug-and-Wafer Type	a. 125 or 150	a. Category A[1]	a. NPS 2–48	Ductile iron copper alloys B16.34 materials
	b. 150, 300, and 600	b. Category B[2]	b. NPS 3–24	
API 6D Specification for Pipeline Valves	150, 300, 400, 600, 900, 1500, 2500	Gate, plug, ball, check flanged, or welded ends	Class 2500 (NPS 2–16) Class 1500 (NPS 2–16) Class 900 (NPS 2–36) Class 150–600 (NPS 2–60)	A216, A217, A351, A352, A487, A757, A105, A182, A350, A541, A181, A707

[1] Manufacturer's rated cold working pressure (CWP) butterfly valves, usually with concentric disc and seat configuration.

[2] Pressure-temperature rated butterfly valves that have an offset seat and either eccentric or concentric disc configuration.

TABLE A10.5 Valves Covered by AWWA Standards

AWWA[1] Standard	Rating/class	Valve types	Size	Material
AWWA C500a-95 Addendum to ANSI/AWWA C500-93 AWWA Standard for Metal-Seated Gate Valves for Water Supply Service	200 psig (1380 kPa) for valves 12 in (300 mm) NPS and smaller, and 150 psig (1050 kPa) for valves with diameter 16 in (400 mm) NPS and larger[2]	a. NRS gate valves	a. 3 in (75 mm)–48 in (1200 mm)[4]	Iron body A126, A395, A536, A27
		b. (OS&Y) rising stem gate valves[3]	b. 3 in (75 mm)–12 in (300 mm)	
AWWA C501-92 AWWA Standard for Cast-Iron Sluice Gates		Sluice gate		Cast iron A126, A48
AWWA C504-94[5] AWWA Standard for Rubber-Seated Butterfly Valves	a. Class 150	a. Wafer valves	a. 3–20 in (75–500 mm)	Cast iron Ductile iron Alloy—cast iron A48, A126, A216, A436, A439, A536
	b. All classes	b. Short-body flanged valves	b. 3–72 in (75–1800 mm)	
	c. Class 75A, Class 75B, Class 150A and Class 150B[6]	c. Long-body flanged valves	c. 3–72 in (75–1800 mm)	
	d. ▪ Class 150B ▪ All classes	d. Mechanical joint-end valves	d. ▪ 3–24 in (75–600 mm) ▪ All sizes 30–48 in (750–1200 mm)	
AWWA C507-91 AWWA Standard for Ball Valves 6 in–48 in (150 mm–1200 mm)	150–300	Flanged end, tight shut-off, shaft or trunnion-mounted, full port, double- and single-seated ball valves	6 in–48 in (150 mm–1200 mm)	Gray iron Ductile iron Cast steel A27, A48, A126, A216, A351, A395

TABLE A10.5 Valves Covered by AWWA Standards (Continued)

AWWA[1] Standard	Rating/class	Valve types	Size	Material
AWWA C508-93 AWWA Standard for Swing-Check Valves for Waterworks Service, 2 in (50 mm) through 24 in (600 mm) NPS	a. 175 psig (1200 kPa) b. 150 psig (1030 kPa)	Swing check with mechanical joint or flanged ends	a. 2 in (50 mm)–12 in (300 mm) b. 16 in (400 mm)–24 in (600 mm)	Iron body A27, A47, A126, A395, A536
AWWA C509a-95 Addendum to ANSI/AWWA C509-94 AWWA Standard for Resilient-Seated Gate Valves for Water Supply Service	• 200 psig (1380 kPa) for 3–12 in (75–300 mm size) • 150 psig (1034 kPa for 16 and 20 in (400 and 500 mm size)	Gate with a. Flanged end b. Mechanical joint ends c. Push-on joint ends d. Tapping-valve ends	3, 4, 6, 8, 10, 12, 16, 20 in (75, 100, 150, 200, 250, 300, 400, 500 mm)	Gray or ductile iron A27, A126, A395, A536
ANSI/AWWA C510-92 AWWA Standard for Double-Check Valve Black-Flow Prevention Assembly	150 psig (1034 kPa)	Double check valve	¾ in (19 mm) 10 in (254 mm)[7]	Bronze and gray iron B61, B62, B139, B584 A126, A276, A395, A536
ANSI/AWWA C512-92 AWWA Standard for Air-Release, Air Vacuum, and Combination Air Valves for Waterworks Service	Maximum working pressure of 300 psig (2070 kPa)	Air-release, air-vacuum, and combination air valves flanged or threaded ends	½ in (13 mm)–16 in (400 mm)	Gray cast iron or ductile iron A48, A126, A536

1. For detail scope, refer to applicable AWWA Standard.
2. Valves for operating pressure outside these limits are beyond the scope of this standard.
3. Gate valves with either double-disc gates having parallel or inclined seats, or solid-wedge gates. Flanges and mechanical joints per section 3.5 of this standard.
4. Valves 14 in (350 mm) NPS and 18 in (450 mm) are not covered by this standard.
5. Standard cover valves suitable for a maximum steady state fluid–working pressure of 150 psig (1034 kPa), a maximum steady state ΔP of 150 psi (1034 kPa) and maximum velocity 16 ft/sec (4.9 m/sec).
6. For classification A and B, reference section for definition of classification.
7. Reference Table 1 of the standard for complete details.

on the valve must be in accordance with the applicable valve standard or standards. A valve may comply with one or more valve standards. For example, a Class 600, NPS 4 (DN 100), butt-welding end, steel gate valve complying with ASME B16.34 may be marked as Class 800 valve in accordance with API Standard 603, provided the valve complies with the design and construction requirements of both ASME B16.34 and API 603. Some valve manufacturers may have proprietary design valves that are rated for specialty applications.

Dual- or multiple-rated valves may be used within the pressure-temperature rating(s) conforming to the valve standard referenced in the code of jurisdiction under which the system is designed and constructed. Dual- or multiple-rated valves have increased utility and broad market. The manufacturer benefits from reduced design and production costs.

MAJOR VALVE PARTS

Pressure Retaining Parts

Valve body, bonnet or cover, disc, and body-bonnet bolting are classified as pressure-retaining parts of a valve. The following provides a brief description of these parts:

Body. The valve body houses the internal valve parts and provides the passage for fluid flow. The valve body may be cast, forged, fabricated, or made by a combination of cast, forged, or fabricated portions. Valve bodies can be and are made from a variety of metals and alloys. Also, valve bodies can be and are made of nonmetals; however, these must be within certain size and pressure-rating limits.

The valve-body ends are designed to connect the valve to the piping or equipment nozzle by different types of end connections, such as butt or socket-welded, threaded, flanged or bolted, soldered, brazed, solvent cement joint, mechanical joint, or coupling. Refer to Table A10.6.

Bonnet or Cover. The bonnet or cover is fastened to the valve body to complete the pressure-retaining shell. In case of gate, globe, stop check, and diaphragm valves, it contains an opening for the valve stem to pass through. Usually, it contains a stuffing box. It provides access to valve internals, especially when the valve is installed. The top works of valves include bonnet, yoke, and operating mechanism. The bonnet is the base that supports the valve top works.

The valve bonnet is attached to the valve body by many different types of joints: bolted, pressure-seal joints—breach lock and standard pressure seal joints—threaded, welded, union joint, and clamp seal. Some valves have a bonnetless design in which valve body and bonnet are combined into one. This is also known as an integral bonnet.

The bolted bonnet design is commonly used with cast or ductile iron, cast or forged steel, and alloy valves, which are rated NPS 2½ (DN 65) and larger, and Class 600 and below. Valves with a pressure seal–bonnet design are usually manufactured in Class 600 and higher rating classifications and are considered superior in regard to the leaktightness of the body bonnet joint. Bolted bonnet designs are also produced in valves rated Class 900 and higher. The user needs to consider the potential consequences of flow-medium leakage through body bonnet joints and take the necessary measures to prevent or contain the leakage.

TABLE A10.6 Valves Body Materials and Available End Connections

Remarks	Flanged (FD)[1]	Welding		Threaded	Soldered	Brazed	Mechanical joint	Solvent cement	Remarks
		BW	SW						
Carbon steels	X	X	X	X			X		See Tables A10.2, 3, 4 & 5
Stainless steels	X	X	X	X			X		See Tables A10.2, 3, 4 & 5
Alloy steels	X	X	X	X			**X**		See Tables A10.2, 3, 4 & 5
Cast iron	X			X					See Tables A10.3, 4 & 5
Ductile iron	X			X					See Tables A10.3, 4 & 5
Bronze	X			X	X	X	X		See Tables A10.3, 4 & 5
Brass	X			X	X	X	X		
Copper	X			X	X	X	X		
Thermoplastics	X						X	X	Refer to ASME B16.40

[1] Flanged-end valves include flanged, wafer-and-lug–style valves, which are installed between flanges.

Bonnet or Cover Bolting. Bolting includes bolts, nuts, and washers. The bolting to be used must be made from materials acceptable for the application in accordance with the applicable code, standard, specification, or the governing regulation. Refer to the applicable valve standard for acceptable bolting materials.

Disc. The disc is the part which allows, throttles, or stops flow, depending on its position. In the case of a plug or a ball valve, the disc is called plug or a ball. A valve disc could be cast, forged, or fabricated. A disc is seated against the stationary valve seat or seats when the valve is in the closed position. It can be moved away from the valve seat(s) by motion of the valve stem, with the exception of check and safety-relief valves, in which the disc is moved away from its seat(s) by fluid flow and pressure.

At times some users do not consider the valve disc to be a pressure-retaining or -containing part. The reasoning advanced is that when the valve is in an open position, the disc does not perform a pressure-retaining or -containing functions. However, when the same valve is closed, the disc performs pressure-retaining functions. Refer to Table A10.7 for disc materials.

Valve Trim. The removable and replaceable valve internal parts that come in contact with the flow medium are collectively termed as valve trim. These parts include valve seat(s), disc, glands, spacers, guides, bushings, and internal springs. The valve body, bonnet, packing, et cetera that also come in contact with the flow medium are not considered valve trim.

TABLE A10.7 Selected Materials of Construction for Valves

Material nominal designation	Forgings		Castings		Bars		Tubular	
	Spec. No.	Grade	Spec. No.	Grade	Spec. No.	Grade	Spec. No.	Grade
C	A105		A216	WCB	A675 A105	70	A672	B70
C-Si 3 1/2Ni	A350	LF3	A216	WCC	A350	LF3	A106	C
C-1/2Mo			A217	WC5	A182	F2	A691	CM-75
1 1/4Cr-1/2Mo	A182	F11 Cl.2	A217	WC6	A182	F11 Cl.2		
2 1/4Cr-1Mo	A182	F22 Cl.3	A217	WC9	A182	F22 Cl.3		
5Cr-1/2Mo	A182	F5	A217	C5	A182	F5		
9Cr-1Mo	A182	F9	A217	C12	A182	F9		
18Cr-8Ni	A182 A182	F304 F304H	A351 A351	CF3 CF8	A182 A182	F304 F304H	A312 A312	TP304 TP304H
9Cr-1Mo-V	A182	F91	A217	C12A	A182	F91	A335	P91
16Cr-2Ni-2Mo 16Cr-12Ni-2Mo	A182	F316	A351 A351	CF3M CF8M	A182	F316	A312 A312	TP316 TP317
18Cr-8Ni 16Cr-12Ni-2Mo	A182 A182	F304L F316L			A182 A479 A182 A479	F304L 304L F316L 316L	A312 A312	TP304L TP316L
18Cr-10Ni-Ti	A182 A182	F321 F321H			A182 A479 A182	F321 321 F321H	A312 A312	TP321 TP321H
35Ni-35Fe-20Cr-Cb 28Ni-19Cr-Cu-Mo	B462	N08020	A351	CN7M	B473	N08020	B464 B468	N08020 N08020
33Ni-42Fe-21Cr	B564	N08800			B408	N08800	B163	N08800
54Ni-16Mo-15Cr 42Ni-21.5Cr-3Mo-2.3Cu	B574 B425	N10276 N08825			B574 B425	N10276 N08825	B622 B423	N10276 N08825

Valve trim parts may be constructed of assorted materials because of the different properties needed to withstand different forces and conditions. Bushings and packing glands do not experience the same forces and conditions as do the valve disc and seat(s). Flow-medium properties, chemical composition, pressure, temperature, flow rate, velocity and viscosity are some of the important considerations in selecting suitable trim materials. Trim materials may or may not be the same material as the valve body or bonnet.

API has standardized trim materials by assigning a unique number to each set of trim materials. Refer to Table A10.8 for API trim materials.

Nonpressure Retaining Parts. Valve seat(s), stem, yoke, packing, gland bolting, bushings, handwheel, and valve actuators are some of the major nonpressure-retaining parts of a valve.

Valve Seat(s). A valve may have one or more seats. In the case of a globe or a swing-check valve, there is usually one seat, which forms a seal with the disc to stop the flow. In the case of a gate valve, there are two seats; one on the upstream side and the other on the downstream side. The gate-valve disc or wedge has two seating surfaces that come in contact with the valve seats to form a seal for stopping the flow. Multiport plug and ball valves may have several seats, depending upon the number of ports in the plug or ball.

The valve leakage rate is directly proportional to the effectiveness of the seal between the valve disc and its seat(s). The valve standards MSS SP 61, API 598, and ASME B16.34 specify acceptable leak rates. A user may specify more or less restrictive leak rates to satisfy the application requirements.

Valve manufacturers have developed several designs of combination valve seats involving elastomer and metal seats that are effective in achieving the desired leaktightness, which is not readily accomplished with metal seats.

Valve seats may be integral, replaceable, or renewable seat rings. Small valves generally are provided with screwed-in, swaged-in, welded, or brazed-in valve seats. Large valves may have any of the seat designs listed for small valves, or have seats integrally cast or forged with the valve body and hardened by heat treatment or surfaced with hard material such as Stellite. Stellite is a trade name of the Deloro Company. There are other metals that can be used for hardening the seating surfaces.

Galling Prevention. In order to prevent or minimize galling of the valve disc and valve seats, it is common industry practice to maintain a hardness differential between the stationary seating surfaces of valve seats and the moving seating surfaces of the valve disc. The stationary valve seats are hardened slightly more than the disc-seating surfaces. When both the valve seats and the disc are hardened by use of Stellite, the valve is termed fully stellited. When only the seats are hardened by use of Stellite, the valve is called half stellited. Heat treatment is another method of hardening.

Valve Stem. The valve stem imparts the required motion to the disc, plug, or the ball for opening or closing the valve. It is connected to the valve handwheel, actuator, or the lever at one end and the valve disc on the other. In gate or globe valves, linear motion of the disc is needed to open or close the valve, while in plug, ball, and butterfly valves, the valve disc is rotated to open or close the valve. With the exception of stop-check valves, check valves do not have valve stems.

Rising Stem with Outside Screw and Yoke. The outermost part of the stem is threaded, while the portion of stem inside the valve is smooth. The stem threads are isolated from the flow medium by the stem packing. Two different styles of this design are available: one having the handwheel fixed to the stem so that they rise together, and the other having a threaded sleeve that causes the stem to rise through the handwheel. The rising stem with outside screw and yoke (O. S. & Y.) is a common design for NPS 2 (DN 50) and larger valves. Some codes, such as ASME B31.1, Power Piping, require that an outside screw-and-yoke design be used

TABLE A10.8 API Trim Materials

Trim number	Nominal trim	Seat surface material type (b)	Seat surface Typical specification (grade)			Stem/Bushing	
			Cast	Forged	Welded	Material type (b)	Typical specifications type
1	F6	13Cr	ASTM A217 (CA15)	ASTM A182 (F6a)	AWS A5.9 ER410	13Cr	ASTM A276 T410 or T420
2	304	18Cr-8Ni	ASTM A351 (CF8)	ASTM A182 (F304)	AWS A5.9 ER308	18Cr-8Ni	ASTM A276 T304
3	F310	25Cr-20Ni	*	ASTM A182 (F310)	AWS A5.9 ER310	25Cr-20Ni	ASTM A276 T310
4	Hard F6	Hard 13Cr	*	(f)	*	13Cr	ASTM A276 T410 or T420
5	Hardfaced	Co-Cr A(g)	*	*	AWS A5.13E or R CoCrA	13Cr	ASTM A276 T410 or T420
5A	Hardfaced	Ni-Cr	*	*	(h)	13Cr	ASTM A276 T410 or T420
6	F6 and	13Cr	ASTM A217 (CA15)	ASTM A182 (F6a)	AWS A5.9 ER410	13Cr	ASTM A276 T410 or T420
	Cu-Ni	Cu-Ni	*	(k)	*	*	*
7	F6 and	13Cr	ASTM A217 (CA15)	ASTM A182 (F6a)	AWS A5.9 ER410	13Cr	ASTM A276 T410 or T420
	Hard F6	Hard 13Cr	*	(f)	*	*	*
8	F6 and	13Cr	ASTM A217 (CA15)	ASTM A182 (F6a)	AWS A5.9 ER410	13Cr	ASTM A276 T410 or T420
	Hardfaced	Co-Cr A(g)	*	*	AWS A5.13E or R CoCrA	*	*
8A	F6 and	13Cr	ASTM A217 (CA15)	ASTM A182 (F6a)	AWS A5.9 ER410	13Cr	ASTM A276 T410 or T420
	Hardfaced	Ni-Cr	*	*	(h)	*	*
9	Monel	Ni-Cu alloy	*	MFG. Standard	*	Ni-Cu alloy	MFG. Standard

TABLE A10.8 API Trim Materials (Continued)

Trim number	Nominal trim	Seat surface material type (b)	Seat surface Typical specification (grade)			Stem/Bushing	
			Cast	Forged	Welded	Material type (b)	Typical specifications type
10	316	18Cr-8Ni	ASTM A351 (CF8M)	ASTM A182 (F316)	AWS A5.9 ER316	18Cr-8Ni	ASTM A276 T316
11	Monel and	Ni-Cu alloy	*	MFG. Standard	*	Ni-Cu alloy	MFG. Standard
	Hardfaced	Trim 5 or 5A	*	*	SEE TRIM 5 or 5A	*	*
12	316 and	18Cr-8Ni	ASTM A351 (CF8M)	ASTM A182 (F316)	AWS A5.9 ER316	18Cr-8Ni	ASTM A276 T316
	Hardfaced	Trim 5 or 5A	*	*	SEE TRIM 5 or 5A	*	*
13	Alloy 20	19Cr-29Ni	ASTM A351 (CN7M)	ASTM B473	AWS A5.9 ER320	19Cr-29Ni	ASTM B473
14	Alloy 20 and	19Cr-29Ni	ASTM A351 (CN7M)	ASTM B473	AWS A5.9 ER320	19Cr-29Ni	ASTM B473
	Hardfaced	Trim 5 or 5A	*	*	See trim 5 or 5A	*	*
15	Hardware	Co-Cr A(g)	*	*	AWS A5.13E or R CoCrA	18Cr-8Ni	ASTM A276 T304
16	Hardfaced	Co-Cr A(g)	*	*	AWS A5.13E or R CoCrA	18Cr-8Ni	ASTM A276 T316
17	Hardware	Co-Cr A(g)	*	*	AWS A5.13E or R CoCrA	18Cr-10Ni	ASTM A276 T347
18	Hardfaced	Co-Cr A(g)	*	*	AWS A5.13E or R CoCrA	19Cr-29Ni	ASTM B473

Notes: (f) = Case hardened by nitriding to a thickness of 0.13 m (0.005 in) minimum. (h) = Manufacturer's standard hardfacing with a maximum iron content of 25%. (k) = Manufacturer's standard with 30 Ni minimum.

Trim Numbers and Alternate Trim Number

Specified trim numbers	Alternative trim number
1	8 or 8A
2	10
5A	5
6	8
8A	8

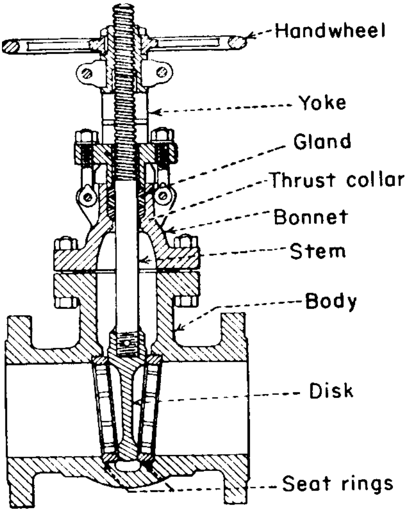

FIGURE A10.1 Rising-stem solid-wedge gate valve for 250-psig steam service.

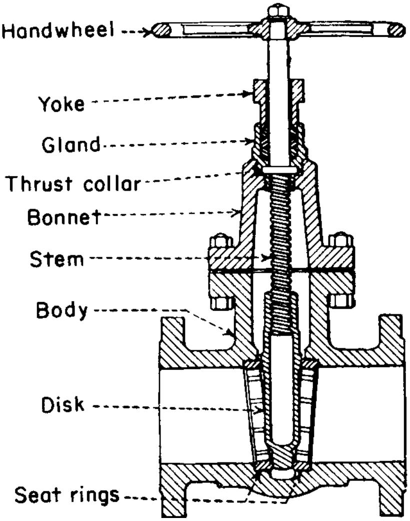

FIGURE A10.2 Nonrising stem gate valve for 250-psig steam service.

for NPS 3 (DN 80) and larger valves in pressures above 600 psi (4140 kPa). See Fig. A10.1.

Rising Stem with Inside Screw. The threaded part of the stem is inside the valve body, and the stem packing is along the smooth part that is exposed to the atmosphere outside. In this case the stem threads are in contact with the flow medium. When rotated, the stem and the handwheel rise together to open the valve. This design is commonly used in the smaller-sized low-to-moderate pressure gate, globe, and angle valves.

Nonrising Stem with Inside Screw. The threaded part of the stem is inside the valve and does not rise. The valve disc travels along the stem like a nut when the stem is rotated. Stem threads are exposed to the flow medium and, as such, are subjected to its impact. Therefore, this design is used where space is limited to allow linear stem movement, and the flow medium does not cause erosion, corrosion, or wear and tear of stem material. See Fig. A10.2.

Sliding Stem. This stem does not rotate or turn. It slides in and out of the valve to close or open the valve. This design is used in hand-lever–operated quick-opening valves. It is also used in control valves that are operated by hydraulic or pneumatic cylinders.

Rotary Stem. This is a commonly used design in ball, plug, and butterfly valves. A quarter-turn motion of the stem opens or closes the valve.

Stem Packing. Stem packing performs one or both of the following two functions, depending on the application:

- Prevent leakage of flow medium to the environment
- Prevent outside air from entering the valve in vacuum applications

Stem packing is contained in a part called the stuffing box. Packing rings are packed and compressed by tightening a packing nut or packing gland bolts. Compression must be adequate to achieve a good seal. Sometimes it requires regular inspection and tightening of packing rings, if required, to stop leakage. If this does not stop the leakage, the packing may need to be replaced. Belleville washers are used to maintain *live loading,* or the required compression of packing to achieve an effective seal against leakage.

A stuffing box may be provided with some or all of the following features as dictated by the valve application:

- Two sets of packing rings separated by an intermediate lantern ring
- A bottom junk ring
- A leak-off connection which detects leakage past the lower set of packing rings and is piped off to a leakage collection tank
- A blow-off connection for removal of packing rings using compressed air
- Belleville washer, live loading
- A steam-seal connection, where an external steam supply is used to prevent leakage from the packing chamber
- As an alternate to steam-seal connection, a grease or sealant-seal connection used to prevent loss of vacuum within the valve
- Inverted-V packing for vacuum service

Figure A10.3a shows a standard graphite packing arrangement; Figure A10.3b depicts the inverted Teflon packing arrangement for vacuum service; Figure A10.3c reflects a lantern-ring packing arrangement; and Figure A10.3d shows a live-loading packing system.

Stem Protector. In the case of outside-screw-and yoke rising-stem gate and globe valves, a portion of the threaded valve stem is exposed to the outside environment when the valve is in the open position. Airborne dirt and other substances may be deposited on the exposed portion of the threaded stem and impair its smooth operation or shorten its stem-bushing life. A stem protector in the form of a clear plastic sleeve, tubing, or a pipe with a cap at the end is installed to protect the stem. The length of the stem protector must be adequate to allow full stem travel.

Back Seat. Back seat is comprised of a shoulder on the stem and a mating surface on the underside of the bonnet. It forms a seal when the stem is in the fully open position. It prevents leakage of flow medium from the valve shell into the packing chamber and consequently to the environment. Back seat enables dismantling of the valve beyond the bonnet, without disrupting the fluid flow through the valve. In addition, it allows the replacing of the stuffing box while the valve is in service.

Yoke. Yoke is also called yoke arms. It connects the valve body or bonnet with the actuating mechanism. In some cases, it provides support for the gland-pull-down bolts. On many valves, the yoke and bonnet are designed as one-piece construction. The top of the yoke holds a yoke nut, stem nut, or yoke bushing and the valve stem passes through it. See Fig. A10.1.

For power-actuated valves, the yoke arms are of a heavier construction to provide adequate support to the actuator. The yoke usually has openings or windows to allow access to the stuffing box, position-switch dogs, actuator couplings, et cetera.

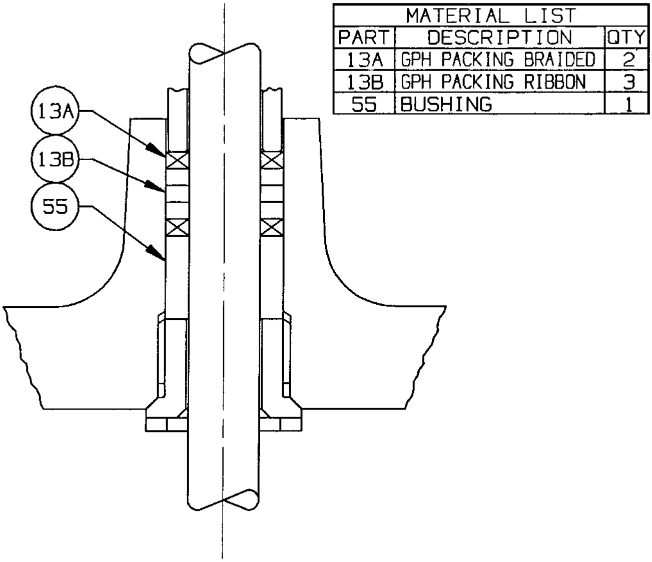

MATERIAL LIST		
PART	DESCRIPTION	QTY
13A	GPH PACKING BRAIDED	2
13B	GPH PACKING RIBBON	3
55	BUSHING	1

FIGURE A10.3a Standard graphite packing arrangement. *(Courtesy of Velan.)*

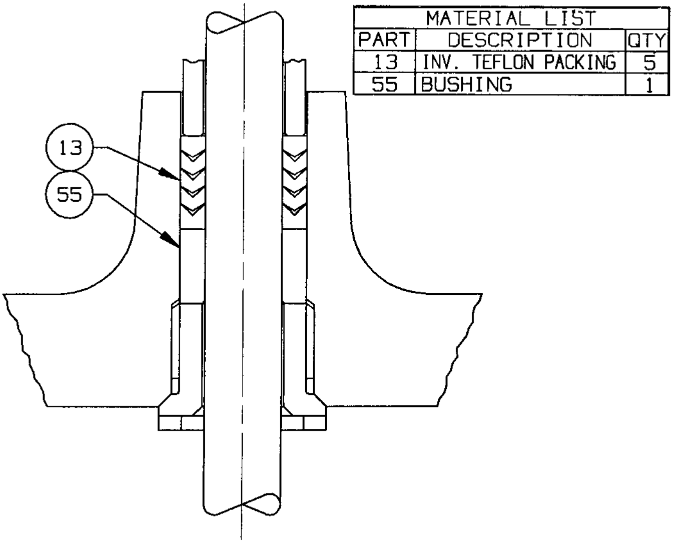

MATERIAL LIST		
PART	DESCRIPTION	QTY
13	INV. TEFLON PACKING	5
55	BUSHING	1

FIGURE A10.3b Inverted Teflon packing arrangement for vacuum service. *(Courtesy of Velan.)*

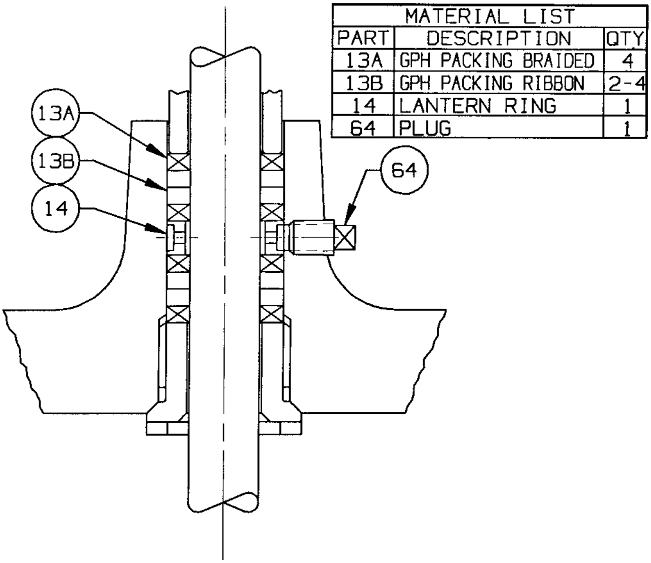
13A
13B
14
64

MATERIAL LIST		
PART	DESCRIPTION	QTY
13A	GPH PACKING BRAIDED	4
13B	GPH PACKING RIBBON	2-4
14	LANTERN RING	1
64	PLUG	1

FIGURE A10.3c Lantern ring packing arrangement. *(Courtesy of Velan.)*

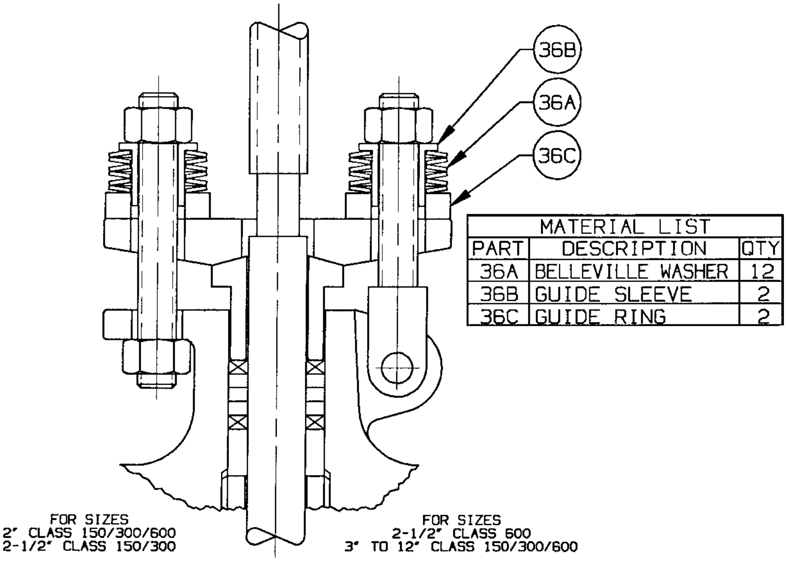
36B
36A
36C
FOR SIZES
2" CLASS 150/300/600
2-1/2" CLASS 150/300
FOR SIZES
2-1/2" CLASS 600
3" TO 12" CLASS 150/300/600

MATERIAL LIST		
PART	DESCRIPTION	QTY
36A	BELLEVILLE WASHER	12
36B	GUIDE SLEEVE	2
36C	GUIDE RING	2

FIGURE A10.3d Live-loading packing arrangement. *(Courtesy of Velan.)*

Structurally, a yoke must be sturdy enough to withstand forces, moments, and torque developed by the actuator.

Yoke Bushings. An internally threaded nut held in the top of a yoke through which the valve stem passes. In gate and diaphragm valves, the yoke nut is turned and the stem travels up or down depending upon the direction of rotation of the nut. In the case of globe valves, the nut is held fixed and the stem is rotated through it. Usually, the yoke nut or yoke bushing is made of softer material than the stem for valves requiring medium effort to actuate. Valves which require greater effort to open or close are provided with anti-freeze yoke-sleeve bearings that minimize the friction between the hardened stem and the yoke bushing.

MATERIALS

Each of the valve standards listed in the beginning of this chapter lists material specifications which are acceptable for construction of valves covered by the standard. At times, a valve standard may make reference to other standard(s) which list the acceptable materials. One of the most widely used valve standards is ASME B16.34. It lists three groups of acceptable materials that are further subdivided into several subgroups.

Valve bodies, discs, and bonnets may be made from forgings, castings, or fabricated from combination of plate materials and others. Stems are usually produced from bar stock. Stems may be heat treated to provide needed hardness. Tubular materials are also used to make valve parts.

Valve bodies and trim materials may be totally different. For example, cast iron body valve may have stainless steel or bronze trim. Sometimes, the discs may be electroplated or lined to provide protection against corrosion.

Refer to Tables A10.3, A10.4, A10.5, A10.7, and A10.8 for lists of valve materials. For additional listing of acceptable valve materials, refer to valve standards and the code of jurisdiction.

VALVE CATEGORIES

Stop (Isolation) Valves

As the name implies, stop valves are used to stop flow or isolate a portion of the system until it is desirable to achieve flow downstream of the valve. The basic design requirement of stop valves is to offer minimum resistance to flow in the fully open position and to exhibit tight shut-off characteristics when fully closed. Gate, globe, ball, butterfly, plug, and diaphragm valves satisfy the above requirements in varying degrees and, therefore, are widely used in shut-off service. The actual type of valve selected is dictated by several parameters, including:

- Pressure drop
- Seat leakage
- Fluid properties

- System leakage
- Actuation requirements
- Initial cost
- Maintenance

Regulating Valves

Regulating valves are used extensively in piping systems to regulate the flow of fluid. Whether the desired effect is to control flow, pressure, or temperature, the task is accomplished by increasing or decreasing the flow through the valve in response to a signal from a pressure, flow, or temperature controller.

The primary requirement of a flow-control valve is to predictably regulate the flow with respect to its open position and impart the required pressure drop without sustaining damage. Specially designed globe, needle, butterfly, ball, plug, and diaphragm valves are capable of satisfying these requirements in varying degrees. The manufacturer's literature should be consulted for the limitations placed on a particular valve.

Backflow Prevention

Valves are generally used for the prevention of backflow. The valves are self-actuating and the valve disc is kept open by the forward flow of fluid. The valve disc is quickly closed by reverse flow. In certain applications, pneumatic actuators may be used to assist in the rapid closure of the valves on reversal of flow.

Pressure-Relief Devices

Pressure-relief devices are used to protect piping and equipment from being subjected to pressures that exceed their design pressures. Generally, the seating of relief valves is accomplished by a compressed spring, which exerts a force on the valve disc, pressing it against the valve seat. When the force exerted by the fluid on the valve disc exceeds the spring force, the valve automatically opens to release the excess pressure. Other designs incorporate a pilot valve, which uses system pressure to control the movement of the disc. Another type of pressure-relieving device, although not a valve, is a rupture disc. See Fig. A10.4. The rupture disc is designed to burst open at a predetermined pressure. A rupture disc cannot be reseated and, therefore, must be replaced once it has performed its relieving function. Rupture discs have the advantage of being leak tight up to the rupture pressure and of being capable of relieving large rates of flow. The set pressure of rupture discs cannot be adjusted.

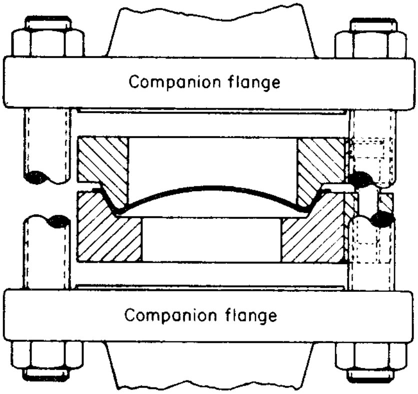

FIGURE A10.4 The rupture disc, a type of relief device.

VALVE TYPES

Gate Valves

Gate valves are primarily designed to serve as isolation valves. In service, these valves generally are either fully open or fully closed. When fully open, the fluid or gas flows through the valve in a straight line with very little resistance. Gate valves should not be used in the regulation or throttling of flow because accurate control is not possible. Furthermore, high-flow velocity in partially opened valves may cause erosion of the discs and seating surfaces. Vibration may also result in chattering of the partially opened valve disc. An exception to the above are specially designed gate valves that are used for low-velocity throttling; for example, guillotine gate valves for pulp stock.

Advantages of Gate Valves

1. They have good shutoff characteristics.
2. They are bidirectional.
3. The pressure loss through the valve is minimal.

Disadvantages of Gate Valves

The following are some of the disadvantages of gate valves that must be considered when selecting a gate valve for an application:

1. Gate valves are not quick opening or closing valves. Full-stem travel to open or close a gate valve requires many turns of its handwheel or an actuator.
2. Gate valves require large space envelope for installation, operation, and maintenance.
3. The slow movement of the disc near the full-closed position results in high-fluid velocities, causing scoring of seating surfaces, referred to as wire drawing. It also causes galling of sliding parts.
4. Some designs of gate valves are susceptible to thermal or pressure binding, depending upon the application.
5. In systems experiencing high-temperature fluctuations, wedge-gate valves may have excessive leakage past the seats due to changes in the angular relationship between the wedge and the valve seats caused by piping loads on the valve ends.
6. Repair or machining of valve seats in place is difficult.

Construction of a Gate Valve

Gate valves consist of three major components: body, bonnet, and trim. The body is generally connected to the piping by means of flanged, screwed, or welded connections. The bonnet, containing the moving parts, is joined to the body, generally with bolts, to permit cleaning and maintenance. The valve trim consists of the stem, the gate, the wedge, or disc, and the seat rings.

Two basic types of gate valves are the manufactured-wedge type and the double-disc type, and there are several variations within each of these types. A third type of gate valve, called conduit valve, is shown in Fig. A10.5.

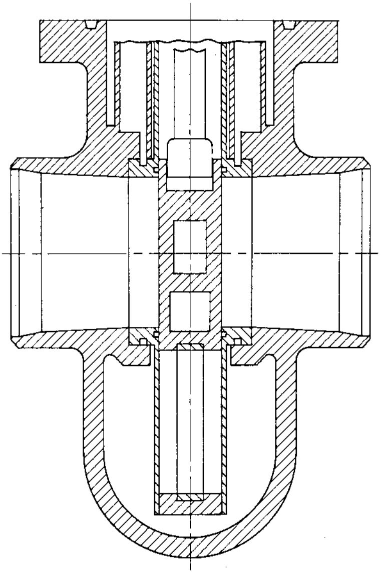

FIGURE A10.5 Conduit valve.

Wedge Type

There are four types of wedges: *solid, hollow, split, and flexible wedge.* The solid wedge is a single-piece solid construction. It does not compensate for changes in seat alignment due to pipe-end loads or thermal fluctuations. As such it is most susceptible to leakage. Except for NPS 2 (DN 50) and smaller, solid-wedge discs are generally not recommended for use in applications having temperatures in excess of 250°F (121°C). Solid-wedge gate valves are considered the most economical. Almost all small, NPS 2 (DN 50) and smaller, gate valves are solid-wedge gate valves. Solid-wedge gate valves are generally used in moderate to lower pressure-temperature applications. It is common practice to use cast iron or ductile iron solid-wedge gate valves in cold or ambient water lines.

A hollow wedge is a variation of solid wedge with the exception of a hole in the center. The hollow wedge travels along the stem when the threaded stem is rotated, thus opening or closing the valve port.

The flexible wedge is also one-piece construction like a solid wedge, but areas behind the seating surfaces are hollowed out to provide flexibility. This construction compensates for changes in seat alignment for improved seating while maintaining the strength of a solid wedge in the middle. This design offers better leaktightness and improved performance in situations with potential for thermal binding.

The split wedge consists of two-piece construction which seats between the tapered seats in the valve body. The two pieces of split wedge seat flat against the valve seats as the stem is moved downward, and they move away from the valve seats when the stem is pulled upward.

In the wedge or disc-wedge types either a tapered solid or tapered split wedge is used. In the rising stem valves (Fig. A10.1), the operating threads are out of direct contact with the fluid or gas. The nonrising stem type (Fig. A10.2) is preferred where space is limited and where the fluid passing through the valve will not corrode or erode the threads or leave deposits on the threads. Also, the nonrising stem valve is preferred for buried service. When the valve is closed, the gate disc is wedged on both sides against the seat. In split-wedge gate valves (Fig. A10.6), the two-piece wedge disc is seated between matching tapered seats in the body. This type is preferred where the body seats might be distorted due to pipeline strain.

In the rising-stem type of valve, the upper part of the stem is threaded and a nut is fastened solidly to the handwheel and held in the yoke by thrust collars. As the handwheel is turned, the stem moves up or down. In the nonrising stem valve, the lower end of the stem is threaded and screws into the disc, vertical motion of

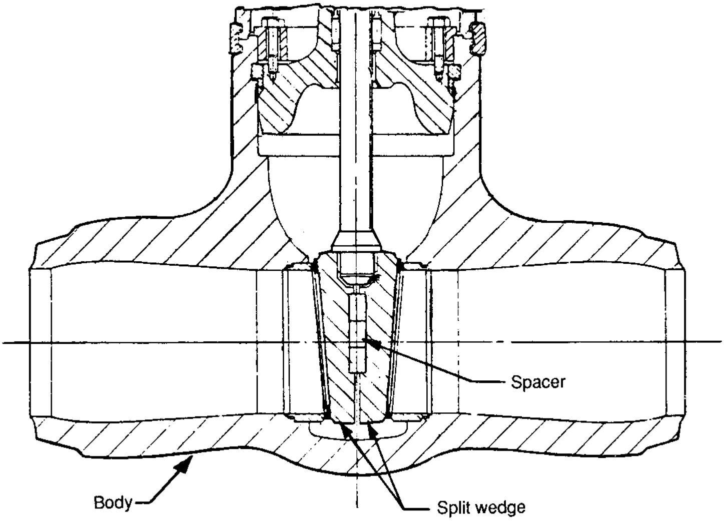
Spacer
Body
Split wedge

FIGURE A10.6 Split-wedge gate valve.

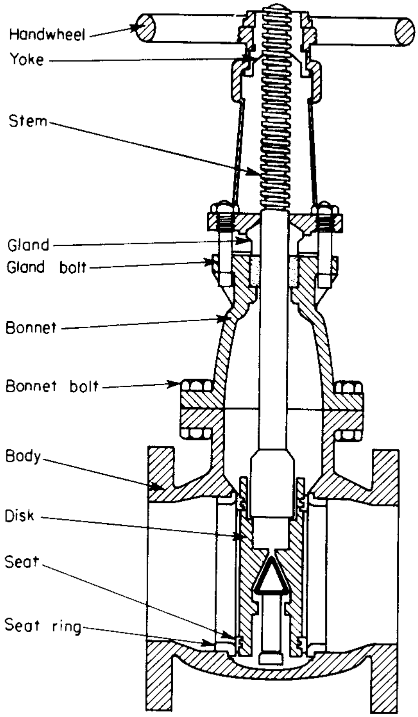
Handwheel
Yoke
Stem
Gland
Gland bolt
Bonnet
Bonnet bolt
Body
Disk
Seat
Seat ring

FIGURE A10.7a Double-disc rising-stem flanged-end gate valve for 150-psig service.

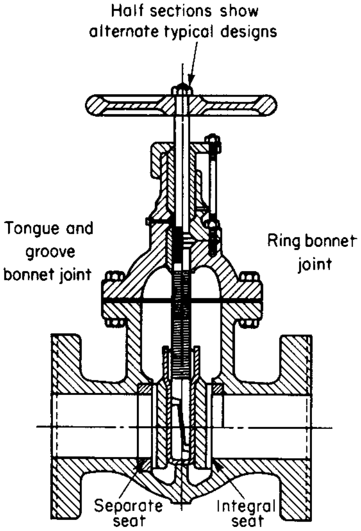
Half sections show
alternate typical designs
Tongue and
groove
bonnet joint
Ring bonnet
joint
Separate
seat
Integral
seat

FIGURE A10.7b Double-disc nonrising-stem gate valve.

the stem being restrained by a thrust collar. The rising-stem valve requires a greater amount of space when opened. However, it is generally preferred because the position of the stem indicates at once whether the valve is open or closed. Nonrising stem valves are sometimes provided with an indicator for this purpose.

Double-Disc Type

In the double-disc parallel-seat valves (Figs. A10.7a, A10.7b, and A10.7c), the discs are forced against the valve seats by a wedging mechanism as the stem is tightened. Some double-disc parallel-seat valves employ a design which depends mainly upon the fluid pressure exerted against one side of the disc or the other for its tightness. The major advantage of this type is that the disc cannot be jammed into the body, an action that might make it difficult to open the valve. This is particularly important where motors are used for opening and closing the valve.

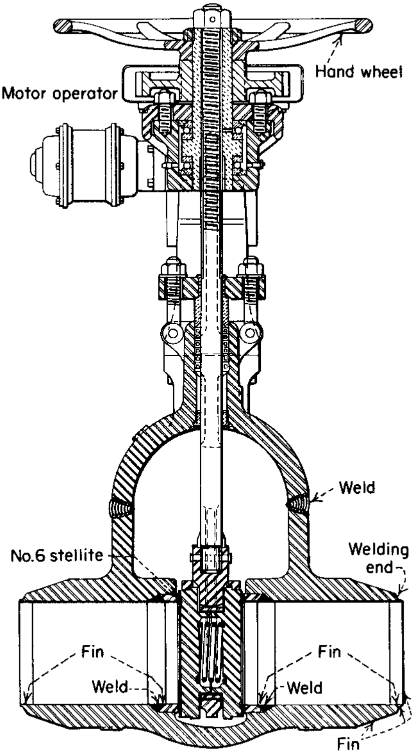

FIGURE A10.7c Parallel-seat gate valve showing welded construction for high-temperature service with welded-in seat ring.

Unlike the wedge in a wedge-gate valve, which only comes into contact with the seat rings when the valve is nearly closed, each disc in the parallel-seat valve slides against its seat while the valve is being opened or closed. Consequently, these components must be made of metals, which do not gall or tear when in sliding contact with each other. The double-disc parallel-seat gate valve is often favored for high-temperature steam service because it is less likely to stick in the closed position as a result of change in temperature.

Conduit Gate Valve

It is also referred to as a slide valve or parallel slide. The disc surfaces are always in contact with the body seats. Like the double-disc or parallel-seated gate valve, its disc seats against the downstream seat, depending on the flow direction. The inside diameter of a conduit gate valve is equal to the inside diameter of the connecting pipe. These valves are used in pipelines where pigs are run through the piping to perform cleaning of builtup deposits or debris. The typical applications of conduit valves include dirty river water with suspended solids or water with sludge or debris.

Conduit gate valves require a large-space envelope because of their longer disc proportions to accommodate both the blank and the spacer halves of the disc assembly. The valve is closed by moving the blank half downward to block the valve port. The spacer is accommodated in the sump part of the valve body. Refer to Fig. A10.5.

Conduit valves with Teflon (PTFE) seats can be used for low to intermediate temperatures (to 450°F or 232°C). Metal-seated valves may be used for temperatures up to 1000°F (538°C).

Thermal Binding

Thermal binding occurs when a valve is tightly shut off while the high temperature system is in operation. Later when the system is shut down and allowed to cool, thermal contraction of the valve seats move inward more than the wedge shrinkage. This can bind the wedge and seats tight enough to not allow the wedge to unseat or move when the handwheel or the valve actuator is activated to open the valve.

Parallel seated gate valves are most suitable for applications having potential for thermal binding. Split-wedge or flexible-wedge type gate valves are expected to perform better than solid-wedge gate valves when thermal binding is a concern.

Pressure Binding

Sometimes in high-temperature applications, the flow medium, such as water or steam, is trapped in the valve bonnet area when the valve is closed for system shutdown. The valves that do not permit this trapped liquid or the condensate to

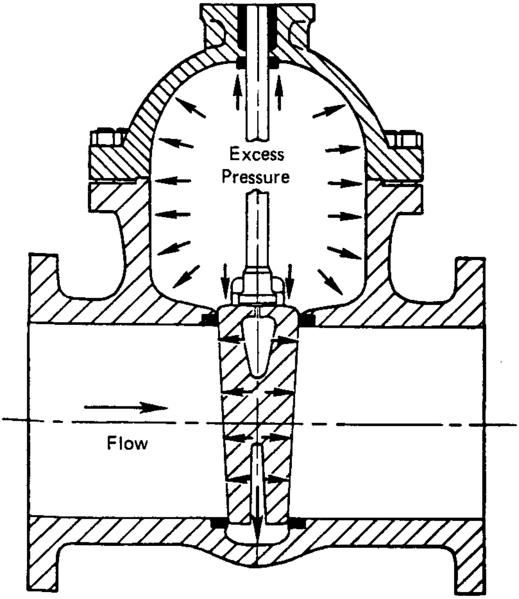

FIGURE A10.8a Pressure binding caused by built-up pressure in bonnet cavity.

reenter the piping either upstream or downstream may experience excessive pressures in the bonnet cavity when the system returns to operating temperature. This built-up pressure in the bonnet cavity can prevent the valve from opening and may cause damage to valve parts. See Fig. A10.8a.

Pressure binding may not occur if the leakage past the upstream seat is adequate to prevent overpressurization of the valve bonnet cavity. The following options offer solutions to this problem:

- Drill a small hole on the upstream side of the disc. See Fig. A10.8b.
- Install a small manual stop valve between the valve bonnet-neck and the upstream end of the valve. This valve shall be opened during startup.
- Install a small relief valve in the bonnet.
- Edward valves offer a new valve called ACEVE to solve this problem.

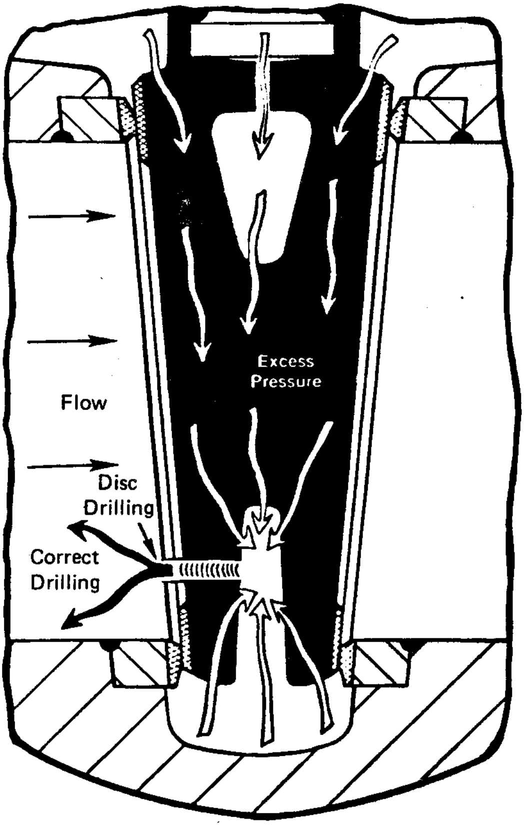

FIGURE A10.8b A hole on the upstream side of wedge to release built-up pressure in bonnet cavity.

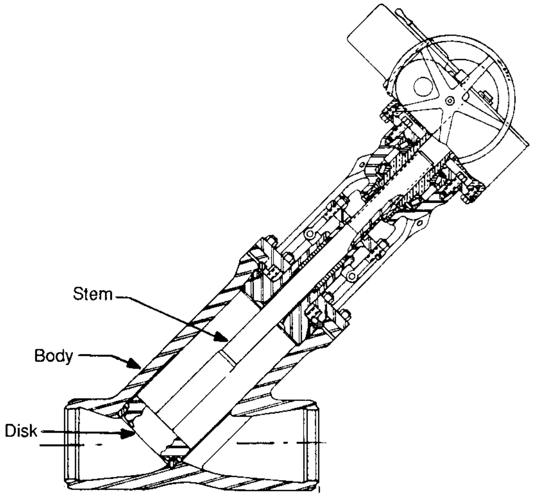

FIGURE A10.9 Large wye-pattern globe valve (with gear actuator).

Typical Gate Valve Applications

Socket or butt-welding end-gate valves in air, fuel gas, feedwater, steam, lube oil, and other systems are typical applications. Threaded-end gate valves may be used in air, gaseous, or liquid systems. Concern for leakage from threaded connection can be addressed by seal welding the threaded connection or by using thread sealants, as appropriate. In low-pressure and low-temperature systems such as fire protection systems' water piping or water distribution pipelines, flanged gate valves are commonly used.

Globe Valves

Conventional globe valves may be used for isolation and throttling services. Although these valves exhibit slightly higher pressure drops than straight-through valves (e.g., gate, plug, ball, etc.), they may be used where the pressure drop through the valve is not a controlling factor. Also, wye-pattern (Fig. A10.9) and angle-pattern (Fig. A10.10) globe valves exhibit improved flow characteristics over the tee-pattern (Fig. A10.11) globe valve. Because the entire system pressure exerted on the disc is

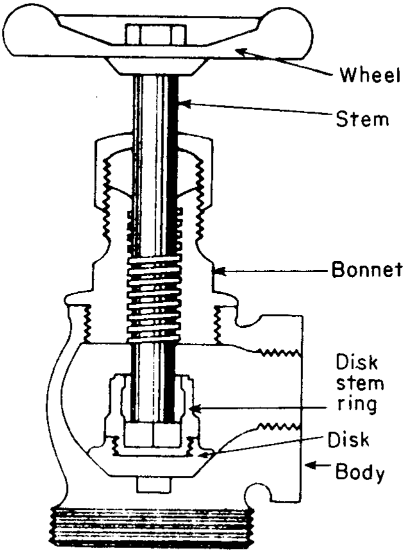

FIGURE A10.10 Angle globe valve with screwed ends.

transferred to the valve stem, the practical size limit for these valves is NPS 12 (DN 300). Globe valves larger than NPS 12 (DN 300) are an exception rather than the rule. Larger valves would require that enormous forces be exerted on the stem to open or close the valve under pressure. Globe valves in sizes up to NPS 48 (DN 1200) have been manufactured and used.

Globe valves are extensively employed to control flow. The range of flow control, pressure drop, and duty must be considered in the design of the valve to avert premature failure and to assure satisfactory service. Valves subjected to high-differential pressure-throttling service require specially designed valve trim. Generally the maximum differential pressure across the valve disc should not exceed 20 percent of the maximum upstream pressure or 200 psi (1380 kPa), whichever is less. Valves with special trim may be designed for applications exceeding these differential pressure limits.

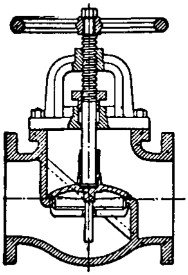

FIGURE A10.11 A typical large globe valve with flanged ends.

Types of Globe Valves

Tee Pattern globe valves have the lowest coefficient of flow and higher pressure drop. They are used in severe throttling services, such as in bypass lines around a control valve. Tee-pattern globe valves may also be used in applications where pressure drop is not a concern and throttling is required. Refer to Fig. A10.11.

Wye Pattern globe valves, among globe valves, offer the least resistance to flow. They can be cracked open for long periods without severe erosion. They are extensively used for throttling during seasonal or startup operations. They can be *rod through* to remove debris when used in drain lines that are normally closed. Refer to Fig. A10.9.

Angle Pattern globe valves turns the flow direction by 90 degrees without the use of an elbow and one extra weld. They have a slightly lower coefficient of flow than wye-pattern globe valves. They are used in applications that have periods of pulsating flow because of their capability to handle the slugging effect of this type of flow. Refer to Fig. A10.10.

Construction of a Globe Valve

A typical large globe valve with flanged ends is illustrated in Fig. A10.11, and a large wye-pattern globe is illustrated in Fig. A10.9. Globe valves usually have rising stems, and the larger sizes are of the outside screw-and-yoke construction. Components of the globe valve are similar to those of the gate valve. This type of valve has seats in a plane parallel or inclined to the line of flow.

Maintenance of globe valves is relatively easy, as the discs and seats are readily refurbished or replaced. This makes globe valves particularly suitable for services which require frequent valve maintenance. Where valves are operated manually, the shorter disc travel offers advantages in saving operator time, especially if the valves are adjusted frequently.

The principal variation in globe-valve design is in the types of discs employed. Plug-type discs have a long, tapered configuration with a wide bearing surface. This type of seat provides maximum resistance to the erosive action of the fluid stream. In the composition disc, the disc has a flat face that is pressed against the seat opening like a cap. This type of seat arrangement is not as suitable for high differential pressure throttling.

The conventional disc, in contrast to the plug type, provides a thin contact between the taper of the conventional seat and the face of the disc. This narrow contact area tends to break down hard deposits that may form on the seats and facilitates pressure-tight closure. This arrangement allows for good seating and moderate throttling.

In cast-iron globe valves, disc and seat rings are usually made of bronze. In steel-globe valves for temperature up to 750°F (399°C), the trim is generally made of stainless steel and so provides resistance to seizing and galling. The mating faces are normally heat-treated to obtain differential hardness values. Other trim materials, including cobalt-based alloys, are also used.

The seating surface is ground to ensure full-bearing surface contact when the valve is closed. For lower pressure classes, alignment is maintained by a long disc locknut. For higher pressures, disc guides are cast into the valve body. The disc turns freely on the stem to prevent galling of the disc face and seat ring. The stem bears against a hardened thrust plate, eliminating galling of the stem and disc at the point of contact.

Advantages of a Globe Valve

The following summarizes the advantages of globe valves:

1. Good shutoff capability
2. Moderate to good throttling capability
3. Shorter stroke (compared to a gate valve)
4. Available in tee, wye, and angle patterns, each offering unique capabilities
5. Easy to machine or resurface the seats
6. With disc not attached to the stem, valve can be used as a stop-check valve.

Disadvantages of a Globe Valve

The following are some shortcomings inherent in globe valves:

1. Higher pressure drop (compared to a gate valve)
2. Requires greater force or a larger actuator to seat the valve (with pressure under the seat)
3. Throttling flow under the seat and shutoff flow over the seat

Typical Applications of Globe Valves

The following are some of the typical applications of globe valves:

1. Cooling water systems where flow needs to be regulated
2. Fuel oil system where flow is regulated and leaktightness is of importance.

3. High-point vents and low-point drains when leaktightness and safety are major considerations.
4. Feedwater, chemical feed, condenser air extraction, and extraction drain systems.
5. Boiler vents and drains, main steam vents and drains, and heater drains.
6. Turbine seals and drains.
7. Turbine lube oil system and others.

Needle Valves

Needle valves generally are used for instrument, gauge, and meter line service. Very accurate throttling is possible with needle valves and, therefore, they are extensively used in applications that involve high pressures and/or high temperatures. In needle valves (Fig. A10.12), the end of the stem is needle point.

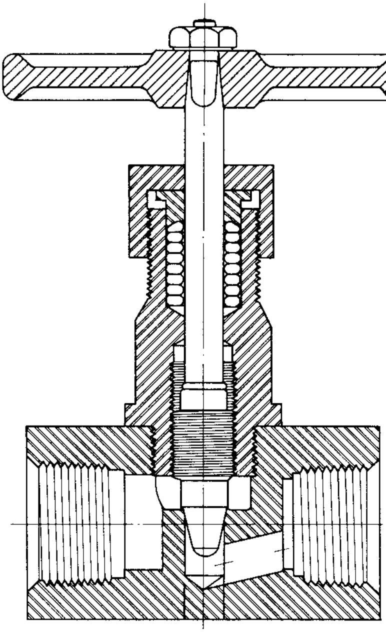

FIGURE A10.12 Needle valve for accurate throttling of flow.

Check Valves

Check valves are designed to pass flow in one direction with minimum resistance and to prevent reverse or backflow with minimal leakage. The principal types of check valves used are the tee-pattern lift check, the swing check, the tilting-disc check, the wye-pattern lift check, and the ball check, illustrated in Figs. A10.13 to A10.17, respectively.

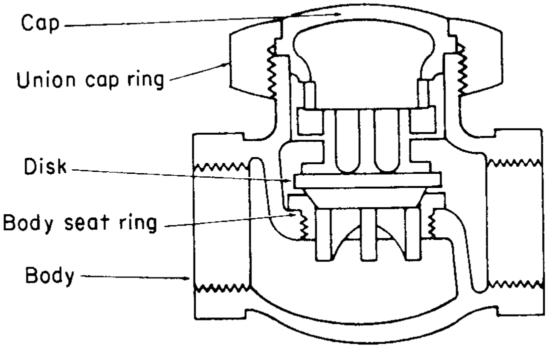

FIGURE A10.13 Lift check valve.

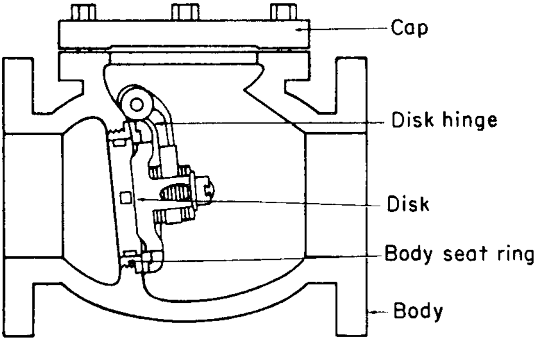

FIGURE A10.14 Swing check valve.

Construction of a Check Valve

A basic check valve consists of a valve body, bonnet or cover, and a disc which is attached to a hinge and swings away from the valve seat to allow fluid to flow in the forward direction, as in a swing- or tilting-disc check valve, and returns to valve seat when upstream flow is stopped. Thus, reverse flow is prevented. In folding-disc check valves, the disc consists of two halves attached in the middle. The two halves fold backward when upstream flow is initiated. Activated by a spring, the two halves quickly close the flow path when upstream flow ceases. In the case of lift-check valves, the disc is in the form of a piston which is moved out of the flow path by upstream flow and returns to the valve seat by gravity to stop back flow. Ball-check valves have a disc in the form of a ball.

Check valves are available in sizes from NPS ¼ (DN 6) through NPS 72 (DN 1800). Other sizes may be made available to meet specific size requirements. Depending upon the design requirements of a piping system, a check valve may have butt welding, socket welding, threaded, or flanged ends.

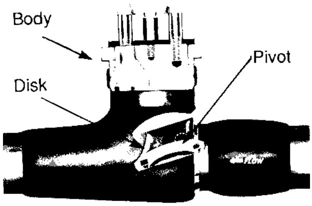

FIGURE A10.15 Tilting-disc check valve. (*Courtesy BTR Inc./Edward Valve*)

Advantages of Check Valves

They are self-actuated and require no external means to actuate the valve either to open or close. They are fast acting.

Disadvantages of Check Valves

The following are some of the disadvantages that are attributed to check valves:

1. Since all moving parts are enclosed, it is difficult to determine whether the valve is open or closed. Furthermore, the condition of internal parts cannot be assessed.

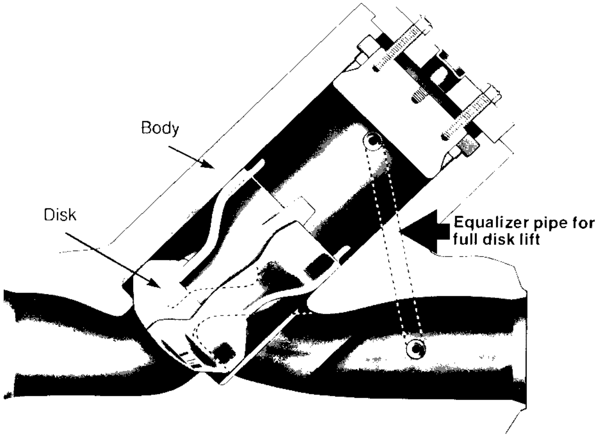

FIGURE A10.16 Wye-pattern lift check valve. (*Courtesy, BTR Inc./ Edward Valve*)

2. Each type of check valve has limitations on its installation configurations.
3. Valve disc can stick in open position.

Types of Check Valves

There are several types of check valves having varying body configurations. The following are some commonly used types of check valves:

Swing Check Valve. In swing check valves, the disc is unguided when it moves to fully open position or to fully closed position. Many different disc and seat designs are available to satisfy requirements of varying applications. Soft-seated–swing check valves provide improved leaktightness compared to metal-to-metal seating surfaces. Combination seats consisting of a metal seat ring with resilient insert also offer better leaktight characteristics. The seating angle, the angle between the seat and the vertical plane, may vary from 0 to 45 degrees. Vertical seats have a 0° angle. Larger seat angles reduce the disc travel, resulting in quick closing, thus minimizing the possibility of water hammer. Usually the seat angles are in the range of 5 to 7 degrees.

Lift Check Valve. Lift check valves are particularly adapted for high-pressure service where velocity of flow is high. In lift check valves, the piston disc is

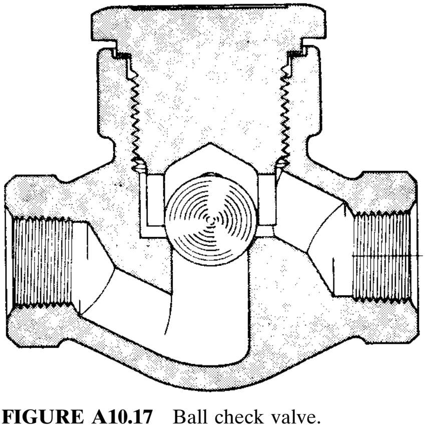

FIGURE A10.17 Ball check valve.

accurately guided by long contact and a close sliding fit with the perfectly centered dash pot. The walls of the piston and dash pot are of approximately equal thickness. Large steam jackets are located outside of the dash pot and inside the piston to eliminate sticking because of differential expansion. The seat ring is of a barrel-type design of heavy uniform cross-section. It is normally screwed in and seal welded. The flow opening is full port size. Refer to Figs. A10.13 and A10.16.

The seat design of a lift-check valve is similar to a globe valve. The disc is usually in the form of a piston or a ball. The ball-lift check valves are used in highly viscous fluid service. These valves have superior leaktight characteristics to those of swing-check valves.

The piston type lift check valves have a tendency to stick in the open position when service fluid has sediment trapped above the piston. Large lift check valves are furnished with an equalizer line between the chamber above the disc and the downstream side of the valve.

Tilting Disc Check Valve. The tilting-disc check valve is designed to overcome some of the weaknesses inherent in conventional swing check valves. A combination of design features enables the valve to open fully and remain steady at lower flow velocities and to close quickly upon cessation of forward flow. The dome-shaped disc floats in the flow with fluid on both bottom and top of its surfaces, thus it has minimum dashpot effect. It performs well in pulsating, turbulent, and high-velocity flows. These attributes prolong the valve's lift and reduce flow-induced dynamic loads on the piping system. Refer to Fig. A10.15.

Folding Disc Check Valves. This valve is also referred to as *double-disc* or *split-disc* check valve. Refer to Fig. A10.18. It is manufactured in wafer-body pattern and is available with soft or hard seats. It is very popular in low-pressure liquid and gaseous services. Its lightweight compact construction makes it a preferable check valve when space and convenience are important.

Vertical or In-Line Check Valve. These valves are available in two configurations: in-line ball check and fully guided disc with soft or hard seats. In-line ball check valves can be used in both vertical and horizontal lines. The fully guided disc in-line check valves must be provided with a spring-assist closure when used in horizontal lines. In vertical lines, the guided disc in-line check valves may or may not be provided with spring-assist closure. The spring-assist closure not only assists in closing the valve quickly, it minimizes the possibility of water hammer by preventing flow reversal.

They can be used in applications having pulsating flows, such as in a discharge line of a reciprocating compressor. Because they are compact in size, they are ideal for application in tight spaces.

Stop Check Valve. A stop check valve can either be used as a unidirectional check valve or as an isolation (stop) valve like a gate or globe valve. During normal operation of a system, these valves are used as a regular check valve; however, when needed, these valves can be closed with the help of a screw-down stem which is not fastened to the valve disc. The stem, when fully screwed down, holds the free-floating disc against the valve seat, just as in a gate or a globe valve. These valves are available in tee-pattern, wye-pattern, angle-pattern, and inclined pattern. The swing-and-piston lift-disc design check valves are commonly used as stop check valves. Refer to Figs. A10.19a and A10.19b.

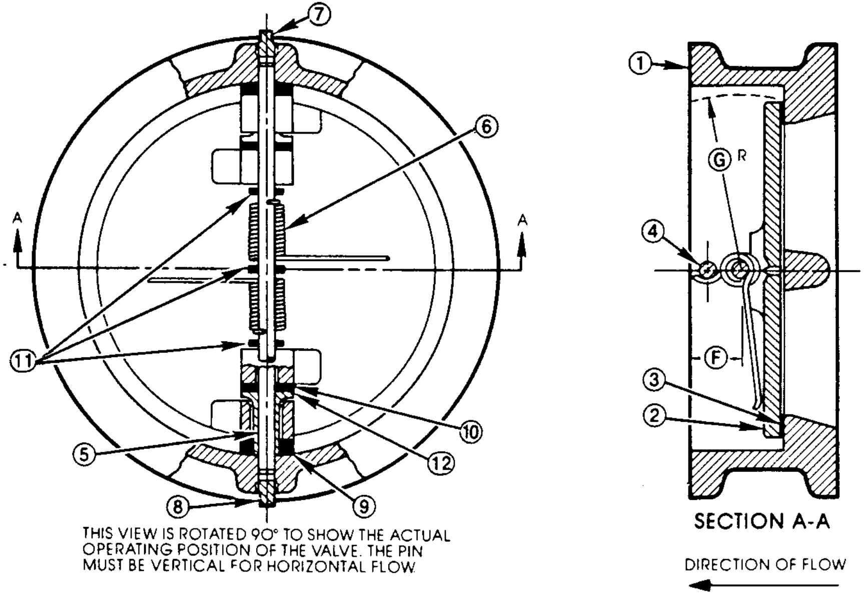
7
6
A
A
11
5
12
10
9
8
1
G
R
4
F
3
2
SECTION A-A
DIRECTION OF FLOW

THIS VIEW IS ROTATED 90° TO SHOW THE ACTUAL OPERATING POSITION OF THE VALVE. THE PIN MUST BE VERTICAL FOR HORIZONTAL FLOW.

ITEM NO	PART NAME
1	BODY
2	PLATE
3	SEAL*
4	STOP PIN
5	HINGE PIN
6	SPRING**
7	STOP PIN RET.
8	HINGE PIN RET.
9	BODY BEARING
10	PLATE BEARING
11	SPRING BEARING
12	SUP. SLEEVE***

*Integral part of body.

**Independent springs available in valve sizes 6″ and larger only.

***Independent plate suspension available in valve sizes 24″ and larger only.

FIGURE A10.18 Folding-disc check valve.

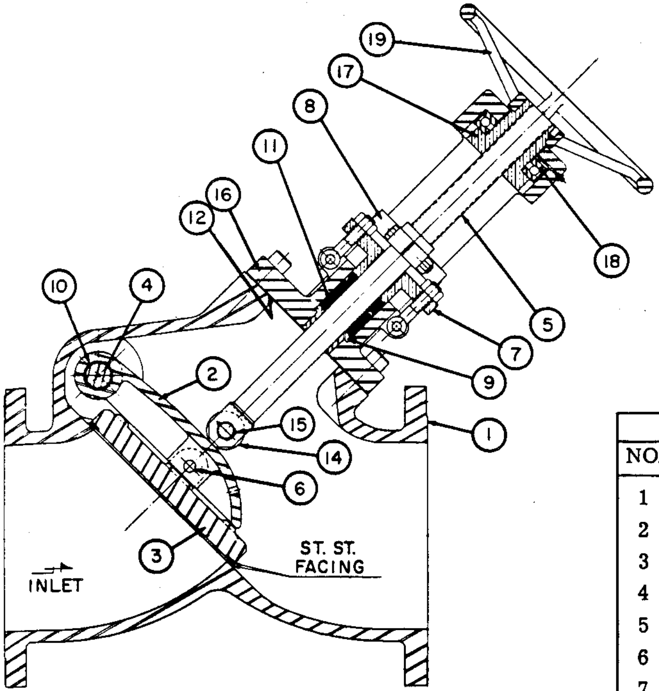
19
17
8
11
16
12
10
4
18
5
7
9
2
15
1
14
6
3
ST. ST.
FACING
INLET

LIST OF PARTS			
NO.	NAME OF PART	NO.	NAME OF PART
1	Body	11	Packing
2	Disc Arm	12	Gasket
3	Disc	13	Shaft Plug (Not Shown)
4	Shaft	14	Roller
5	Stem	15	Roller Pin
6	Disc Pin	16	Comb. Cover & Yoke
7	Gland	17	Stem Nut
8	Anti-Rotation Device	18	Thrust Bearing
9	Cover Bushing	19	Handwheel
10	Shaft Bushing		

FIGURE A10.19a Swing-disc stop check.

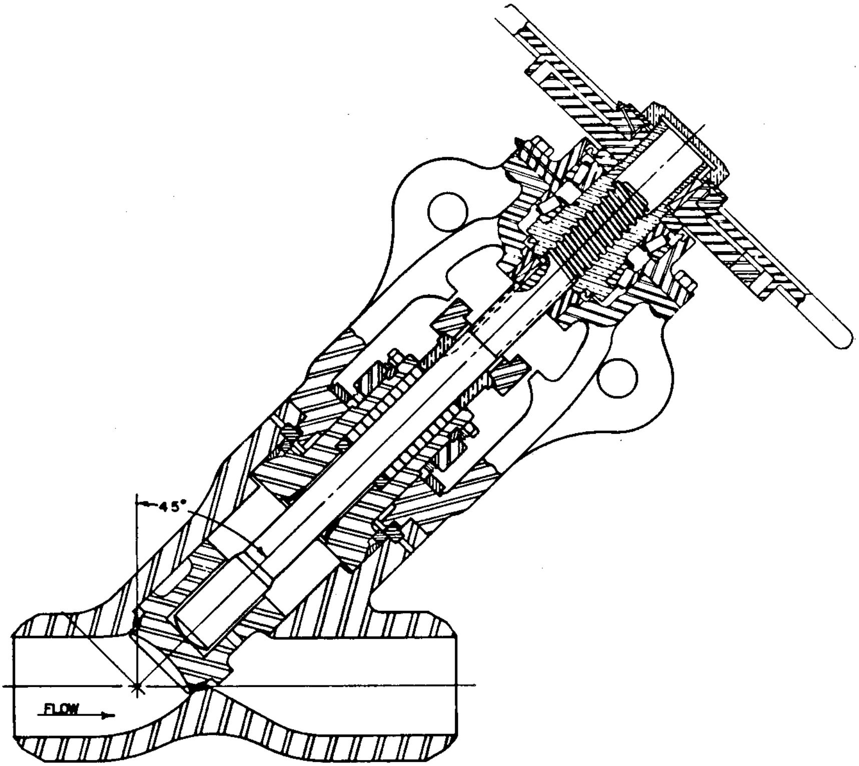

FIGURE A10.19b Wye-pattern stop check.

Application Considerations

The force of gravity plays an important role in the functioning of a check valve and, therefore, the location and orientation of the check valve must always be given consideration. Lift and ball check valves must always be placed so that the direction of lift is vertical. Swing checks must be located to ensure that the disc will always be closed freely and positively by gravity.

The flow velocity of the fluid through the valve has a significant effect on the life of the check valve. The valve should be sized such that the fluid velocity under normal conditions is sufficient to keep the disc fully open and pressed against the stop. This minimizes disc fluttering, which is the primary cause of valve failure.

Also, a check valve should not be located immediately downstream of a source of turbulence, such as a pump, elbow, control valve, or a tee-branch connection. It is recommended that manufacturer's recommendations be followed to provide the required straight run of pipe upstream of the check valve. Some manufacturers recommend 8-to-10 pipe-diameter length of straight run of pipe upstream of the valve. Sometimes, the layout and the space available may not allow compliance to manufacturer's recommendations. Alternatives must be evaluated and the most reasonable and feasible approach be implemented.

A swing check valve may be used in the vertical run of a pipe only when the

TABLE A10.9 Application of Check Valves

Type flow	Media type	Velocity range FPS (m/s)	Recommended check valve type
Uniform with insignificant reversal	Water or oil	1 to 6 (0.3 to 2)	Swing check w/ lever and ctr wt.
	Steam, water, gas	7 to 100 (2 to 30)	Simple swing
Uniform	Water or oil	5 to 10 max (1.5 to 3)	In-line guided disc
Pulsating	Air or gas	5 to 10 max (1.5 to 3)	In-line guided disc with cushion chamber
Uniform with normal reversal	Water or oil	7 to 10 (2 to 3)	Swing with spring assist to close
Uniform with severe reversal	Water or oil	7 to 10 (2 to 3)	Swing with dashpot
Uniform or pulsating	Steam, water or gas	8 to 160 (2.5 to 50)	Tee- or inclined-pattern lift
Uniform or pulsating (severe reversal)	Steam, water or gas	10 to 160 (3 to 50)	Tee-pattern lift with dashpot
Uniform	Steam, water or gas	12 to 250 (4 to 75)	Tilting disc
Uniform or pulsating	Steam, water, gas, oil	20 to 250 (6 to 75)	Wye-pattern lift
Uniform or pulsating (severe reversal)			Wye-pattern lift with dashpot

flow is upward. In addition, the flow velocity and the fluid pressure must be adequate to overcome the disc weight and swing it to the fully open position. In-line ball check valves are suitable for application in horizontal or vertical lines.

When the flow is suspected to be pulsating and low, use of a swing check valve is not recommended. Due to the continuous flapping of the swing disc against the seat, valves suffer considerable damage, and at times the swing discs can come loose.

Table A10.9 summarizes preliminary application guidelines for selection of a suitable type of check valve. The user must evaluate specific application features to determine the right valve for the application.

Typical Applications of Check Valves. Table A10.9 provides a brief summary of different types of check valves and their typical applications. The preliminary guidelines of this table may be used to determine the suitable check valve for an application, considering the specifics of the application.

Ball Valves

The ball valve (Fig. A10.20) is a quarter-turn valve suitable for clean gas, compressed air, and liquid service. They also can be used for slurry service, but provisions for prevention of *crud* buildup must be made. The use of soft-seat materials such as nylon, delrin, synthetic rubbers, and fluorinated polymers imparts excellent sealing ability. With fluorinated polymer seats, ball valves can be used for service temperatures ranging from −450 to 500°F (−270° to 260°C); with graphite seats, service temperatures to 1000°F (538°C) or even higher are possible. Also, with metal-backing seats, the valves can be used in fire-safe services. Ball valves are similar to plug valves in operation. They are nonbinding and provide leak-tight closure. The valves exhibit negligible resistance to flow because of their smooth body and port.

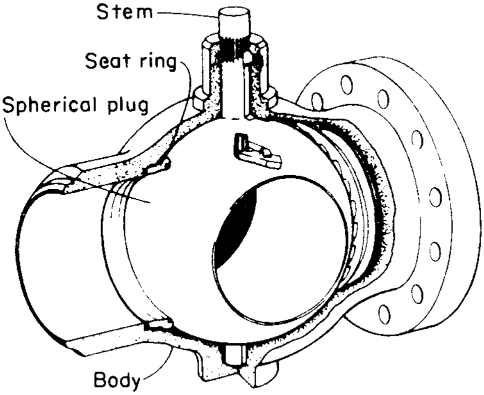

FIGURE A10.20 Ball valve in closed position.

Construction of a Ball Valve

Major components of the ball valve are the body, spherical plug, and seats. Ball valves are made in three general patterns: *venturi port*, *full port*, and *reduced port.* The full-port valve has an inside diameter equal to the inside diameter of the pipe. In the venturi and reduced-port styles, the port is generally one pipe size smaller than the line size. Stem sealing is accomplished by bolted packing glands and O-ring seals. Valves are also available with a lubricant-seal system that is similar to that available for plug valves. A typical lubrication system is illustrated in Fig. A10.21.

A ball valve may be unidirectional, bidirectional, or multidirectional, depending on the number of valve ports and the number of valve seats. Therefore, ball valves are referred to as 2-way, 3-way, 4-way, or 5-way multiport valves. A 2-way ball valve with a single seat will be unidirectional with the flow direction indicated. Even a 3-way, 4-way, or 5-way ball valve can be unidirectional when flow must

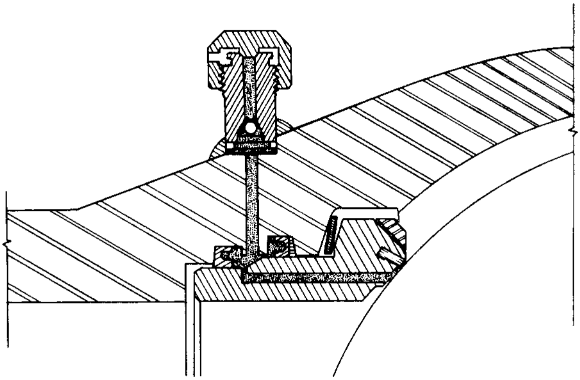

FIGURE A10.21 Lubricant-seal system in a ball valve.

enter through a designated port. A 2-way ball valve provided with two seats, one on the upstream side and the other on the downstream side of the ball, is termed a bidirectional valve. Multiple-port ball valves permit flows in more than one direction, thus eliminating the need for several valves.

Ball valves are manufactured in several different body configurations: *top entry, side entry, split body,* and *three-piece body.* The valve ends are available as butt-welding, socket welding, flanged, threaded, soldering, or brazing ends.

Ball valves are manufactured in high- and low-pressure classifications. The advances in ball valve designs have made it possible to use these valves in high-pressure and high-temperature applications.

Types of Ball Valves

The following provides a brief description of types of ball valves:

Split-Body Ball Valve. The split body design consists of a two-part body, a cover, ball, seat rings, stem, and other internals. The two-part body is held together by a flange connection. One body part is smaller than the other. The ball is inserted in the larger body part, and the smaller body part is assembled by a bolted connection. The stuffing box is constructed integral with the larger body part. On smaller size split-body ball valves, the two-part body is joined by threaded connection. The flanged or threaded joint between the two-part body is an added source of potential leakage.

Flanged end connections are commonly available on all sizes; however, they are standard for large size valves. NPS 2 (DN 50) and smaller split-body ball valves are furnished with screwed ends. The split-body ball valves are manufactured in sizes ranging from NPS ½ (DN 15) through NPS 36 (DN 900). Refer to Fig. A10.22.

Top-Entry Ball Valve. Top-entry ball valves allow access to valve internals for assembly, disassembly, repair, or maintenance by removal of the valve bonnet-cover. The valve is not required to be removed from the pipeline. Refer to Fig. A10.23.

End-Entry Ball Valve. End-entry ball valves have a single-piece body. The ball is inserted from one end and is retained by an insert. These valves have flange- or

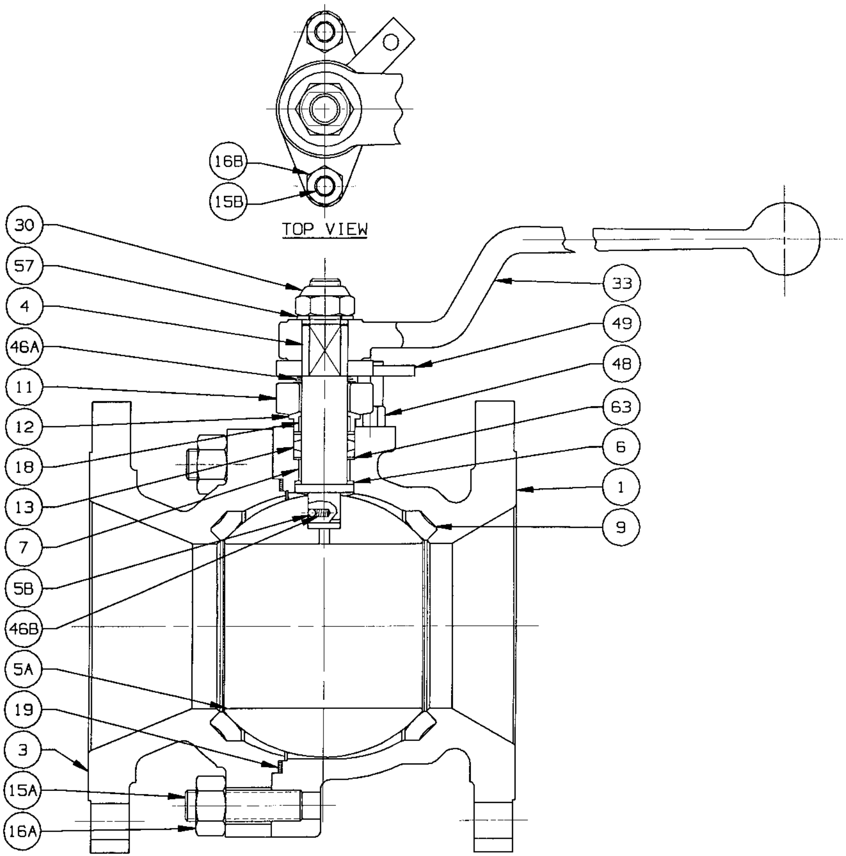
16B
15B
TOP VIEW
30
57
4
46A
11
12
18
13
7
5B
46B
5A
19
3
15A
16A
33
49
48
63
6
1
9

MATERIAL LIST		
PART	DESCRIPTION	QTY
1	BODY	1
3	BODY END	1
4	STEM	1
5A	BALL	1
5B	GROUNDING BALL	1
6	THRUST WASHER	1
7	STEM BUSHING	1
9	SEAT	2
11	PACKING FLANGE	1
12	GLAND BUSHING	1
13	PACKING RING	3
15A	STUD	-
15B	STUD	2
16A	NUT	-
16B	NUT	2
18	GLAND BSHG SLV	1
19	BODY SEAL	1
30	HANDLE NUT	1
33	HANDLE	1
46A	SPRING	1
46B	SPRING	1
48	STOP PIN	2
49	STOP PLATE	1
57	WASHER	1
63	PACKING WASHER	2

FIGURE A10.22 Ball valves, split body, regular port, flanged ends. *(Courtesy of Velan.)*

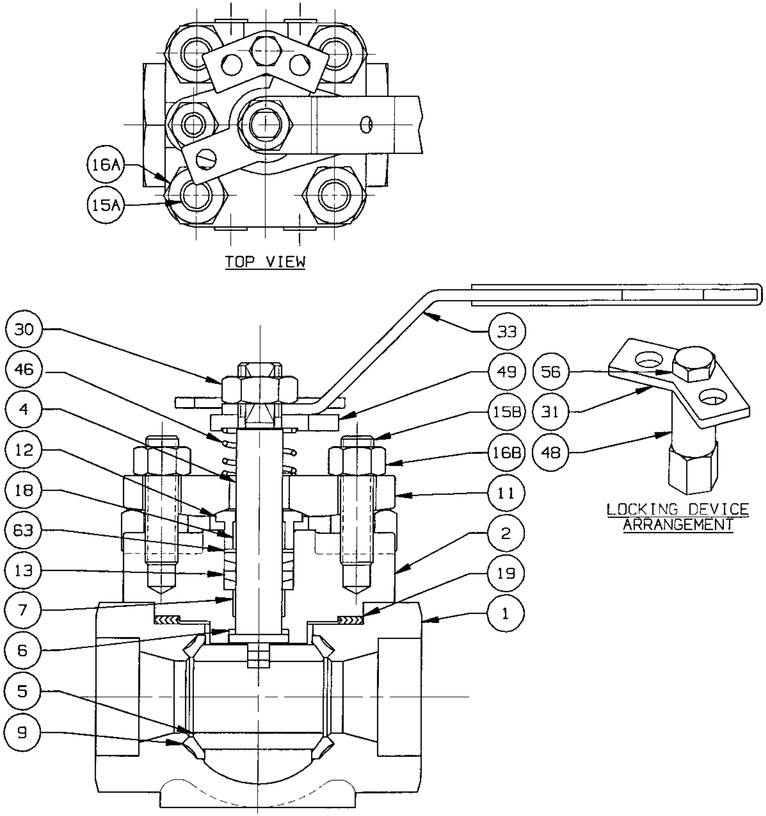
16A
15A
TOP VIEW
30
46
4
12
18
63
13
7
6
5
9
33
49
15B
16B
11
2
19
1
56
31
48
LOCKING DEVICE ARRANGEMENT

MATERIAL LIST		
PART	DESCRIPTION	QTY
1	BODY	1
2	BONNET	1
4	STEM	1
5	BALL	1
6	THRUST WASHER	1
7	STEM BUSHING	1
9	SEAT	2
11	PACKING FLANGE	1
12	GLAND BUSHING	1
13	PACKING RING	4
15A	STUD	4
15B	STUD	2
16A	NUT	4
16B	NUT	2
18	GLAND BSHG SLV	1
19	BONNET SEAL	1
30	HANDLE NUT	1
31	LOCK PLATE	1
33	HANDLE	1
46	SPRING	1
48	STOP PIN	1
49	STOP PLATE	1
56	SCREW	1
63	PACKING WASHER	1

FIGURE A10.23 Ball valves, top entry, regular port, socket weld ends. *(Courtesy of Velan.)*

screwed-end connections. This design is commonly used for inexpensive small valves. They are also available in larger sizes up to NPS 6 (DN 150).

Three-Piece—Body Ball Valve. The middle part of the valve is the major part that holds all valve internals, and the stem passes through a hole in the top. Two end caps are held together with the middle body by bolts or studs and nuts. The end connections are part of the end caps, and they may be butt-welding, socket-welding, threaded, or flanged. This design is available in sizes ranging from NPS ½ (DN 15) through NPS 36 (DN 900). The two end cap joints are two additional sources of potential leakage.

Double Trunnion Ball Valves. In this ball-valve design, the ball is provided with two integral short-shaft extensions called the top and the bottom trunnions. These trunnions are fitted in bearings and rotate freely when the shaft installed in the top trunnion is turned to open or close the valve. The ball is held firmly in place, unlike the ball in other designs where the ball is supported by the two seat rings and is allowed to float in the direction of the slot on top of the ball. A shaft installed in the top slot is turned to open or close the valve.

The trunnion-mounted ball-valve design is used with split-body large size valves, whereas the floating-ball design is the most common design for all other types of ball valves. The torque required to actuate a trunnion-mounted ball valve is substantially smaller than the torque required for a floating-ball design.

Lubricated or Nonlubricated Ball Valves. Like other valves, the stem sealing is usually accomplished by bolted packing glands and O-ring seals. Some valve designs are available with a lubricant-seal system similar to the one used in plug valves. Such a design is shown in Fig. A10.21. The valves with lubrication seal systems are termed lubricated ball valves, while others are called nonlubricated.

Advantages of Ball Valves

The following are the advantages of ball valves:

1. Provides bubble-tight service.
2. Quick to open and close.
3. Smaller in size than a gate valve.
4. Lighter in weight than a gate valve.
5. Multiport design offers versatility not available with gate or globe valves. It reduces the number of valves required.
6. Several designs of ball valves offer flexibility of selection.
7. Can be used in clean and slurry applications.
8. High-quality ball valves provide reliable service in high-pressure and high-temperature applications.
9. Force required to actuate the valve is smaller than that required for a gate or a globe valve.

Disadvantages of Ball Valves

1. They are not suitable for sustained throttling applications.
2. In slurry or other applications, the suspended particles can settle and become trapped in body cavities causing wear, leakage, or valve failure.

Typical Applications of Ball Valves

The following are some typical applications of ball valves:

1. Air, gaseous, and liquid applications requiring bubble-tight service
2. Low-point drains and high-point vents in liquid, gaseous, and other fluid services
3. Instrument root valves
4. Cooling water and feedwater systems
5. Steam service

Plug Valves

Plug valves, also called *cocks,* generally are used for the same full-flow service as gate valves, where quick shutoff is required. They are used for steam, water, oil, gas, and chemical liquid service. Plug valves are not generally designed for the regulation of flow. Nevertheless, in some applications, specially designed plugs are used for this purpose, particularly for gas-flow throttling.

Plug valves generally can be readily repaired or cleaned without necessitating removal of the body from the piping system. They are available for pressure service from vacuum to 10000 psi (69000 kPa) and temperatures from −50 to 1500°F (−46 to 816°C). Also, plug valves are available with a wide variety of linings suitable for many chemical service applications.

Construction of a Plug Valve

The basic design of plug valves is illustrated in Fig. A10.24. Full flow is obtained when the opening in the tapered plug is aligned in the direction of flow. When the plug is rotated a quarter turn, flow is terminated. The body and tapered plug represent the essential features in plug valves. Careful design of the internal contours of the valve produces maximum flow efficiency. The port in the tapered plug is generally rectangular. However, valves are also available with round ports. Major valve patterns or types are identified as *regular, venturi, short, round-port,* and *multiport.*

Plugs are usually tapered downward, while in some cases they are tapered upward. Most of the plug valves are top entry. In top-entry plug valves, the tapered plug is installed from the top of the valve. In some cases the plug is tapered upwards and is installed from the bottom opening in the valve body. Such a plug is called bottom entry or *inverted* plug valve.

Plug valves are also available with cylindrical plugs. The cylindrical plugs provide for larger port openings equal to or greater than the pipe flow area.

The regular pattern employs the tapered form of port openings, the area of which is from 70 to 100 percent of the internal pipe area. In some cases, the face-

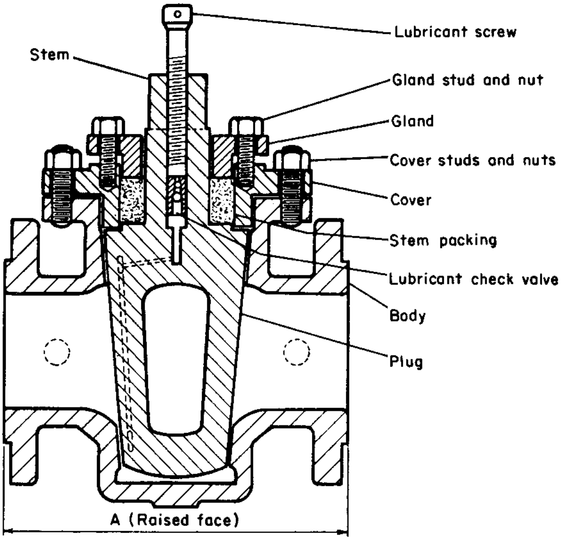
Lubricant screw
Stem
Gland stud and nut
Gland
Cover studs and nuts
Cover
Stem packing
Lubricant check valve
Body
Plug
A (Raised face)

FIGURE A10.24 Plug valve with lubricant system, as specified in API Standard 600.

to-face lengths are greater than those of standard gate valves. The venturi pattern provides streamlined flow and thus permits reduction in the port size. The port opening area is approximately 40 to 50 percent of the internal pipe area. In most of the plug valves, the port opening varies from 60 to 70 percent of the pipe area. The round-port full-bore pattern has a circular port through the plug and body equal to or greater than the inside diameter of the pipe or fitting. Operating efficiency is equal to or greater than that of gate valves of the same size.

Use of multiport valves is advantageous in many installations because it provides simplification of piping and convenience in operation. One three-way or four-way multiport valve may be used in place of two, three, or four straightway valves. Refer to Fig. A10.25.

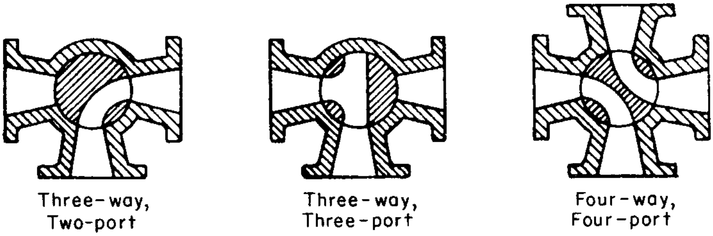
Three-way,
Two-port
Three-way,
Three-port
Four-way,
Four-port

FIGURE A10.25 Multiport valves: (*a*) three-way, two-port; (*b*) three-way, three-port; (*c*) four-way, four-port.

Types of Plug Valves

The following describes salient features of different types of plug valves:

Lubricated Plug Valves. The plug in a lubricated plug valve is provided with a cavity in the middle along its axis. This cavity is closed at the bottom and fitted with a sealant-injection fitting at the top. The sealant is injected into the cavity, and a check valve below the injection fitting prevents the sealant from flowing in the reverse direction. The sealant oozes out from the center cavity through radial holes into lubricant grooves that extend along the length of the seating surface of the plug. The sealant or the lubricant performs the following functions:

1. Establishes a renewable seal between the plug and the body. As a result, internal leakage is prevented or minimized.
2. Protects the seating surfaces against corrosion.
3. Acts as a lubricant, thus reducing the force required to open or close the valve.

The lubricant pressure developed by a turn of the lubricant screw or injection of lubricant with a pressure gun exerts a powerful hydraulic jacking action on the plug, momentarily lifting it from the seat and making it easy to turn. Since the lubricant pressure is greater than the line pressure, it is virtually impossible for solids to lodge between the valve body and plug.

The type of sealant to be used must be compatible with the flow medium in the pipe. The sealant must not dissolve or be washed away by the flow medium. The washed-away or dissolved sealant could contaminate the fluid, and the seal between the plug and the body would be destroyed, resulting in leakage. In addition, the sealant used must be able to withstand the flow-medium temperature.

Lubricated plug valves are normally manufactured in sizes ranging from NPS ½ through 36 (DN 15 through 900). They can be used in applications with pressures over 2500 psi (17250 kPa). They have been used in services involving air, gases, acids, alkalis, water, steam, oils, fuels, among others. Lubricated plug valves are less subject to seizing or wear and may exhibit somewhat greater resistance to corrosion in some service environments.

Nonlubricated Plug Valves. Nonlubricated plug valves contain an elastomeric body liner or a sleeve, which is installed in the body cavity. The tapered and polished plug acts like a wedge and presses the sleeve against the body. Thus, the nonmetallic sleeve reduces the friction between the plug and the body.

Nonlubricating plug valves are used where maintenance must be kept to a minimum. Like lubricating plug valves, these valves also provide a bubble-tight closure and are of compact size.

Lubricants

The word *lubricant* does not precisely define the part this material plays in the efficient functioning of lubricated plug valves. More properly such valves might be called *plastic sealed valves,* and the lubricant could better be designated *plastic sealant.* The use of an effective lubricant is important, as, in operation, the valve structure and plastic scaling film are an integral unit, and each component is dependent on the other for ultimate performance.

The lubricant in effect becomes a structural part of the valve, as it provides a flexible and renewable seat. This eliminates the necessity of *force fits* and metal-to-metal *distortable-seat* contacts to effect a seal. For this purpose, the lubricant must exhibit proper elasticity as well as resistance to solvents and chemicals to avoid the destructive action of the line fluid and to form an impervious seal around each body port, even under pressure. The film of lubricant also protects the metal surfaces between the plug and body from corrosion. The seal formed by the lubricant transmitted in a system of lubricant grooves circuiting each port aids in maintaining the essential film on the metal, closure surfaces.

Advantages of Plug Valves

The following summarizes the advantages of plug valves:

1. Simple design with few parts.
2. Quick to open or close.
3. Can be serviced in place.
4. Offers minimal resistance to flow.
5. Provides reliable leaktight service. Seal can be maintained by injection of sealant or by replacement of sleeve, in addition to utilizing the wedging action of a tapered plug.
6. Multiple port design helps reduce number of valves needed and permits change in flow direction.

Disadvantages of Plug Valves

The disadvantages include:

1. Requires greater force to actuate, due to high friction.
2. NPS 4 (DN 100) and larger valves require use of actuators.
3. Reduced port, due to tapered plug.
4. Typically, plug valves may cost more than ball valves.

Typical Applications of Plug Valves

As indicated earlier, the plug valves can be and have been used in many different fluid services. They perform well in slurry applications. They are primarily used in bubble-tight services as on-off stop valves. The wiping-off action of a plug does not permit suspended particles to accumulate and form crud. The following are some typical applications of plug valves:

1. Air, gaseous, and vapor services
2. Natural gas piping systems
3. Coal slurries, mineral ores, mud, and sewage applications
4. Oil piping systems
5. Vacuum to high-pressure applications

Diaphragm Valves

All diaphragm valves are bidirectional. They can be used as on-off and throttling valves. Diaphragm valves offer advantages in certain low-pressure applications not possible with other types of valves. Their fluid passages are smooth and streamlined, minimizing pressure drop. They are suitable for moderate throttling applications, and they exhibit excellent leak-tight characteristics, even when conveying liquids containing suspended solids. The fluid stream is isolated from the working parts of the valve, preventing contamination of the fluid and corrosion of the operating mechanism. Since there is no leak path around the valve stem, the valve is virtually leak tight. This feature makes the valve indispensable where leakage into or out of the system cannot be tolerated.

The maximum pressure that these valves can be subjected to is a function of the diaphragm material and the service temperature. Also, the rated design life of the valve is influenced by the service conditions. Furthermore, the system hydrostatic test pressure must not exceed the maximum pressure rating of the diaphragm.

Construction of a Diaphragm Valve

Diaphragm valves (Fig. A10.26) consist of a rigid body formed with a weir placed in the flow path, a flexible diaphragm which forms the upper pressure boundary of the valve, a compressor which is used to force the diaphragm against the weir, and the bonnet and handwheel which secure the diaphragm to the body and actuate the compressor.

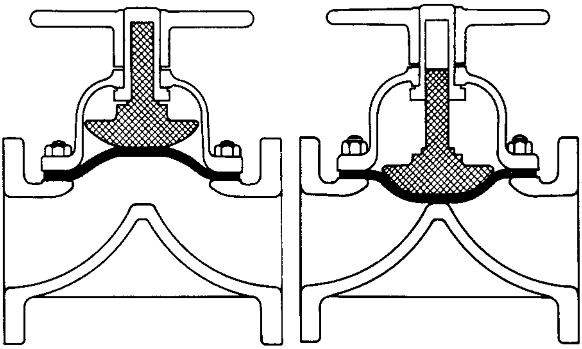

FIGURE A10.26 Sketch of a weir-type of diaphragm valve in open and closed positions.

Diaphragm valves are manufactured in a variety of end connections: welding-end socket or butt welding; flanged, screwed, or threaded; clamp ends or grooved ends; solvent cement joint ends for themoplastic valves; and male sanitary threaded ends.

The valve body is available in two patterns: tee-pattern and angle pattern.

Diaphragm valves are available in a wide choice of body, diaphragm, and lining materials that are suitable for service with a wide variety of chemicals. For severe corrosive applications, diaphragm valves are made of stainless steel or PVC plastics,

TABLE A10.10 Typical Materials Used for Diaphragms

Valve type	Service	Material	Temp, °F (°C)	
			Min	Max
Conventional weir	Abrasive	Soft natural rubber	−30 (−34)	180 (82)
	Water	Natural rubber	−30 (−34)	180 (82)
	Food and beverage	White natural rubber	0 (−18)	160 (71)
	Weak chemical, air, oil	Neoprene	−30 (−34)	200 (93)
	Weak chemical, high vacuum	Reinforced Neoprene	−30 (−34)	200 (93)
	Other chemicals, gases	Black chlorinated butyl	−20 (−29)	250 (121)
	Food and beverage	White chlorinated butyl	−10 (−23)	225 (107)
	Special for hydrogen peroxide	Clear Tygon	0 (−18)	150 (66)
	Oils and gasoline	Hycar (gen. purpose)	10 (−12)	180 (82)
	Oxidizing services	Hypalon	0 (−18)	225 (107)
	Brewery services	Pure gum rubber	−30 (−34)	160 (71)
	Special service on temperature	Silicone	50 (10)	350 (177)
	Radioactive conditions	G.R.S.	−10 (−23)	225 (107)
	Severe chemicals, solvents	Teflon	−30 (−34)	325 (163)
	Severe chemicals	Kel-F	60 (16)	250 (121)
	Specific acids	Polyethylene	10 (−12)	135 (57)
Full flow	Cold beer	White rubber	−30 (−34)	160 (71)
	Hot wort and cold beer	White chlorinated butyl	−10 (−23)	225 (107)
	Cold beer	Pure gum rubber	−30 (−34)	160 (71)
Straightway	Water	Natural rubber	−30 (−34)	180 (82)
	Chemical, air, oil	Neoprene	0 (−18)	180 (82)
	Oils and gasoline	Hycar (gen. purpose)	10 (−23)	180 (82)
	Fatty acids	Black chlorinated butyl	0 (−18)	225 (107)
	Oxidizing services	Hypalon	0 (−18)	200 (93)
	Food and beverage	White chlorinated butyl	−10 (−23)	200 (93)

or they are lined with glass, rubber, lead, plastics, titanium, or still other materials. Some of the common materials used for diaphragms are listed in Table A10.10.

Adjustable travel stops are used to prevent excessive compression of the diaphragm. The adjustable travel stop can be enclosed in a temper-proof housing. The temper-proof housing prevents inadvertent mishandling after the travel length is set. It requires a special tool to open the housing and to make an adjustment in the travel length.

When an actuator is required, it should be sized and tested by the valve manufacturer and furnished with the valve as an assembled unit with settings made and verified in the shop.

Types of Diaphragm Valves

Primarily there are two basic designs of diaphragm valves: *weir* and *straight-through* types. The body interior and the end flanges can be lined to make the diaphragm valves suitable for corrosive applications. Various lining materials can be used, depending upon the application.

Weir-Type Diaphragm Valves. As shown in Fig. A10.26, a weir is provided as an integral part of the valve body. The weir acts as the valve seat against which the diaphragm is compressed to stop the flow. This type of diaphragm valve is generally produced in large sizes. The raised weir reduces the amount of diaphragm travel from the fully open to the fully closed position, thus reducing the amount of stress and strain in the diaphragm.

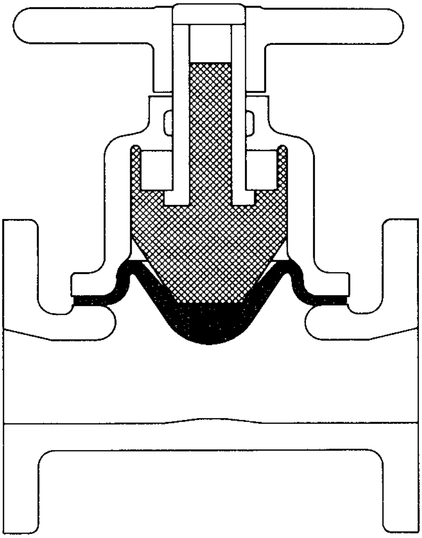

FIGURE A10.27 Straightway-type diaphragm valve.

Straight-Through Diaphragm Valves. Variations of the weir diaphragm valve are the *straightway* (Fig. A10.27) and the *full-bore* types (Fig. A10.28). When the straightway valve is open, its diaphragm lifts high for full streamline flow in either direction. When the valve is closed, the diaphragm seals tight for positive closure even with gritty or fibrous materials in the line.

The full-bore type of valve is most extensively used in the beverage industry. It permits ball-brush cleaning with either steam or caustic soda, without opening or removing the valve from the line.

Advantages of Diaphragm Valves

The following summarizes some distinct advantages of diaphragm valves:

1. Can be used as on-off and throttling service valves.
2. Offer good chemical resistance due to variety of linings available.
3. Stem leakage is eliminated.
4. Provides bubble-tight service.
5. Does not have pockets to trap solids, slurries, and other impurities. It is suitable for slurries and viscous fluids.
6. These valves are particularly suitable for hazardous chemicals and radioactive fluids.
7. These valves do not permit contamination of flow medium, thus they are used extensively in food processing, pharmaceutical, brewing, and other applications which cannot tolerate any contamination.

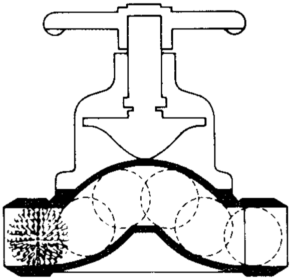

FIGURE A10.28 Full-bore-type diaphragm valve illustrating passage of ball-brush cleaner through valve.

Disadvantages of Diaphragm Valves

1. The weir may prevent full drainage of piping.
2. Working temperatures and pressures are limited by the diaphragm material. Generally the pressures are limited to 200 psi (1380 kPa) and temperatures up to 400°F (204°C).
3. The diaphragm may also limit the hydrostatic pressure.
4. The diaphragm may experience erosion when used extensively in severe throttling service containing impurities.
5. Diaphragm valves are available in limited sizes, usually NPS ½ to 12 (DN 15 to 300).

Typical Applications of Diaphragm Valves

1. Clean or dirty water and air service applications
2. Demineralized water systems
3. Corrosive applications
4. Radwaste systems in nuclear facilities
5. Vacuum service
6. Food processing, pharmaceutical, and brewing systems

Butterfly Valves

Butterfly valves are used to control and regulate or throttle the flow. They are characterized by fast operation and low-pressure drop. They require only a quarter-turn from closed to full-open position. A typical flanged butterfly valve is illustrated in Fig. A10.29. Butterfly valves are produced in sizes ranging from NPS 1½ (DN 40) to over NPS 200 (DN 5000). They are usually manufactured in flanged, wafer, and lug, or single-flange-type designs. The welding-end style is a specially engineered valve for a specific application. Threaded-end, grooved-end, and shouldered-end butterfly valves are also available to satisfy the joint type selected for the piping system. Butterfly valves are produced with metal-to-metal seats, soft seats, and with fully lined body and disc. The soft seats permit bubble-tight shutoff and the full lining enhances erosion and corrosion resistance.

Butterfly valves are suitable for low-pressure and low-temperature applications as well as high-pressure and high-temperature applications. The term *high-performance butterfly valve* is intended to signify their suitability for moderate- to high-pressure and temperature services.

The butterfly valves have a low-pressure drop and high-pressure recovery factor. They are suitable for low-pressure drop applications. These valves are extensively used in large water transmission, distribution, and cooling water lines.

Construction of a Butterfly Valve

A butterfly valve has a short circular body, a round disc, shaft, metal-to-metal or soft seats, top and bottom shaft bearings, and the stuffing box. The valve body may

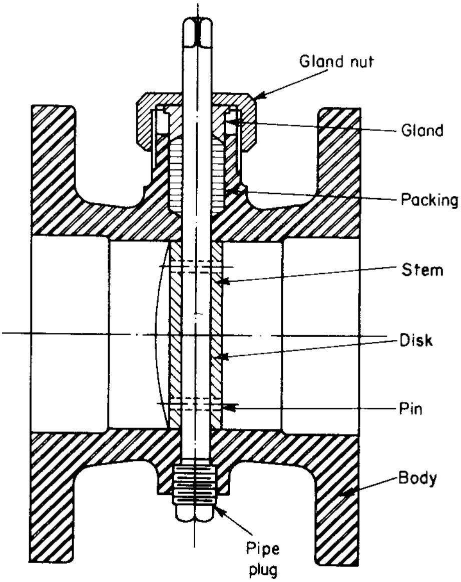

FIGURE A10.29 Typical flanged-end butterfly valve.

have flanged ends, lugs, or wafer style (Fig. A10.30) configurations to be installed between pipe flanges. The welding-end (Fig. A10.31) butterfly valves are usually large and have butt-welding ends. Sometimes butterfly valves are manufactured in rectangular or square configurations.

The wafer-style butterfly valves are usually available in sizes NPS 12 (DN 300) or smaller. The limitation on size is essentially imposed by the difficulty of holding the larger weight valve in place between the flanges. The lug and flanged-end butterfly valves are available in all sizes and pose no problem in installation between flanges except for the normal problems associated with warped-flanged surfaces and uneven torquing of bolts.

Types of Butterfly Valves

Low Pressure or Concentric Butterfly Valves. In low pressure and low temperature designs of a butterfly valves, the disc and shaft axes are concentric. In open position, the disc divides the

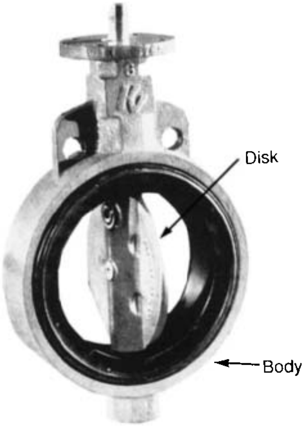

FIGURE A10.30 Wafer butterfly valve. (*Courtesy, Keystone International, Inc.*)

flow in two equal halves, with the disc in the middle and parallel to the flow. These valves are provided with resilient seats. These valves are available as *lined* or *unlined.* Most commonly used lining and seating materials include: Buna N, Neoprene, Fluorcel, Hypalon, EPDM, TFE, Viton, among others. The application temperature is limited by the temperature capability of the resilient material. These valves are generally produced in Classes 150 and 300.

High-Performance or Eccentric Butterfly Valves. The disc in high performance butterfly valves is offset from the center of the valve, and the shaft is also offset from the center of the disc. The offsets provided allow the disc to move eccentrically uninterrupted away from or toward the valve seat. Thus, the uninterrupted motion of the disc until it seats against the valve seat prevents unwanted wear and tear of the valve seat and disc due to friction and rubbing of the seating surfaces. The high-performance butterfly valves are used for on-off and throttling services. Some butterfly valve manufacturers produce high performance butterfly valves with triple offset, which enhances their actuation and leak-tightness.

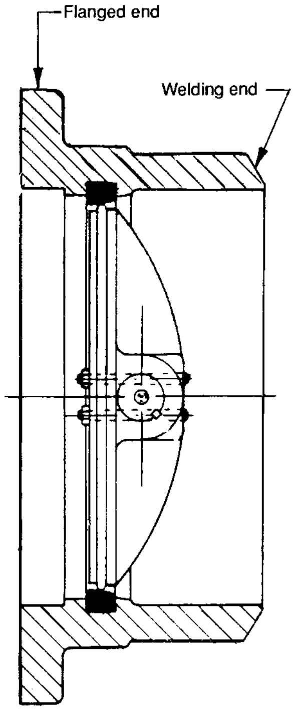

FIGURE A10.31 Butterfly valve; welding end on one end.

Advantages of Butterfly Valves

The following summarizes the advantages of butterfly valves:

1. The compact design requires considerably less space, compared to gate, globe, or other valves.
2. Light in weight.
3. Quick acting; as a quarter-turn valve, it requires less time to open or close.
4. It is available in large sizes, ranging from NPS 1½ (DN 40) to over NPS 200 (DN 5000).
5. They have low-pressure drop and high-pressure recovery.
6. Provide bubble-tight service.

Disadvantages of a Butterfly Valve

1. Throttling service is limited to low differential pressure.
2. Throttling is restricted to a 30- to 80-degree disc opening. Location of valve,

pipe routing, free, and closed discharge are to be considered while using a butterfly valve in a throttling application.

3. Cavitation and choked flow are two potential concerns.
4. The disc movement is unguided and affected by flow turbulence.

Typical Applications of Butterfly Valves

Concentric or low-pressure and low-temperature butterfly valves, the high-performance butterfly valves, cover a wide range of applications. These applications include:

1. Cooling water, air, gases, and other similar applications, such as fire protection, circulating water, et cetera
2. Corrosive services requiring lined valves
3. Food processing, chemical, and pharmaceutical services
4. Slurry and similar services
5. High-pressure and high-temperature water and steam services
6. Throttling service involving low differential pressures, as in cooling water or air supply systems
7. Vacuum service

Application Considerations for Butterfly Valves

1. It is noted that the disc of butterfly valve is unguided; therefore, operability of the valve is affected by the flow characteristics. A butterfly valve should not be located just downstream of a source of flow turbulence, such as pump-discharge nozzle, elbow, control valve, or a tee-branch. To minimize the effects of flow turbulence on the valve, attempts should be made to
   - Locate the valve 4 to 6 diameters downstream of the source of flow turbulence.
   - Orient the valve shaft in the same plane as the elbow or the pump outlet configuration. When there is more than one component on the upstream side of the valve, then the component adjacent to the valve is to be considered in determining the valve-shaft orientation.
2. When used in throttling applications, an attempt must be made to provide an adequate straight length of pipe downstream of the valve to allow the flow turbulence to subsidize prior to diverting the flow.
3. Butterfly valves are essentially bidirectional. In the case of high-performance butterfly valves, and sometimes in the case of low-pressure and low-temperature butterfly valves, the valve design may require more actuating torque to open or close the valve when the flow is reversed. In such cases, the valve manufacturer must be contacted to ensure that the valve is designed and the actuator is sized for flow in both directions.

PRESSURE-RELIEF DEVICES

Safety Valves and Pressure-Relief Devices

Safety valves and pressure-relief valves are automatic pressure-relieving devices used for overpressure protection of piping and equipment. Safety valves (Fig. A10.32) are generally used in gas or vapor service because their opening and reseating characteristics are commensurate with the properties and potential hazards of compressible fluids. The valves protect the system by releasing excess pressure. Under normal pressure, the valve disc is held against the valve seat by a preloaded spring. As the system pressure increases, the force exerted by the fluid on the disc approaches the spring force. As the forces equalize, fluid begins to flow past the seat. The valve disc is designed in such a way that the escaping fluid exerts a lifting pressure over an increased disc surface area, thereby overcoming the spring force and enabling the valve to rapidly attain near-full lift. An added benefit to the safety-valve disc design is that the pressure at which the valve reseats is below the initial set pressure, thereby reducing the system pressure to a safe level prior to resealing. The ratio of the difference between the set pressure and the resealing pressure to the set pressure is referred to as the *blowdown.*

Pressure-relief valves (Fig. A10.33) are used primarily in liquid service. These valves function in a way similar to safety-relief valves, except that as liquids do not

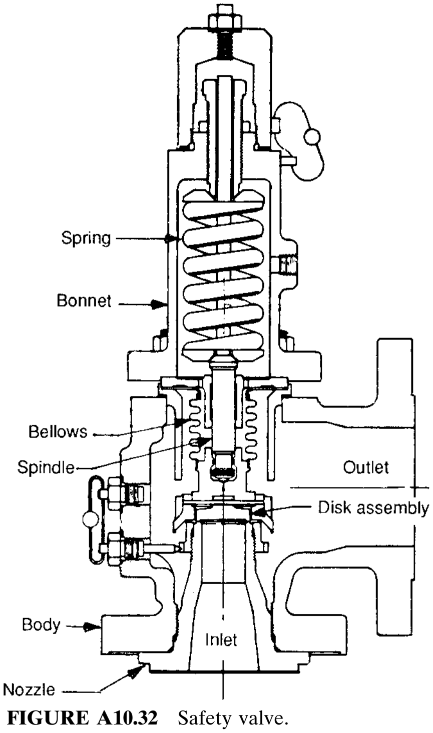

FIGURE A10.32 Safety valve.

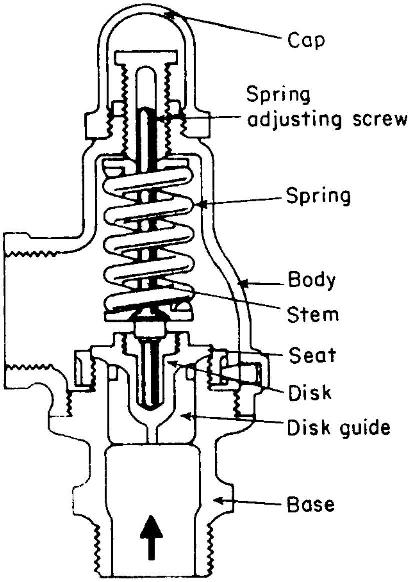

FIGURE A10.33 Relief valve opens when line pressure exceeds preset loading on the spring.

expand, there is no additional lifting force on the disc and, therefore, the valve lift is proportional to the system pressure. Also, the valves reseat when the pressure is reduced below the set pressure.

A third type of pressure-relieving valve is a safety-relief valve, which can be used with both compressible and incompressible fluids. It combines the design features of a safety- and a relief-valve into one. Therefore, when it is used with compressible fluids, such as steam or a gas, it pops open to release the overpressure, and when used with incompressible fluids, such as water or other liquids, it opens gradually, proportional to the increase in pressure over the set pressure, to safeguard the vessel, tank, heat exchanger, piping, or other equipment.

ACTUATORS

A brief discussion is provided to assist the user in understanding the considerations affecting the selection of the type of actuators required for an application. Manually actuated valves do not change position due to a change in the mode of system operation or an accident. As such, a manually operated valve remains in the last position it was placed in. Manually operated valves are usually furnished with a handwheel attached to the valve stem or yoke nut which is rotated clockwise or counter-clockwise to close or open a valve such as a gate or globe valve. Manually operated quarter-turn valves, such as a ball, plug, or butterfly valve, is provided with a lever to actuate the valve. There are applications in which the force required to actuate the valve is more than the force manually imparted through a handwheel or a lever. These applications include:

- Large valves and valves required to be operated against high-fluid pressure
- When the time required to open, close, throttle, or regulate the valve manually is longer than that required by system-design criteria
- When the valve is required to be operated from a remote location
- When the valve must attain a position (open or close) in the event of an accident or in a particular mode of system operation

The valves to be furnished with an actuator utilizing external source(s) of energy, such as electricity, pneumatics, hydraulics, mechanical springs, or a combination of one or more of these energies, are called actuated valves. Upon failure of the external source of energy, a valve may not be in the required position for accomplishing the design function. One must be aware of failure modes prior to selecting a valve actuator.

Failure Modes

Fail-As-Is (FAI): The valve remains in its last position following upon an external power failure.

Fail-Closed: The valve is provided with external source(s) of energy to place it in the closed position, regardless of valve position before power failure.

Fail-Open: The valve is provided with external source(s) of energy to place it in the open position, regardless of valve position before power failure.

Fail-Locked: Air or inert gas actuators may be provided with a device or devices to seal in actuator pressure upon the loss of normal pneumatic source control.

Types of Actuators

The following are some of the commonly used valve actuators:

Gear Actuators. Spur, bevel, or worm-gear actuators are used to reduce the manual force required to operate a valve. Spur gears are used with globe, angle, and nonreturn valves. Bevel-gear actuators are used on gate valves. Worm-gear actuators are usually used on quarter-turn valves. The use of a gear actuator is warranted when the rim pull force required to manually actuate a valve exceeds a given value, which varies from 50 lb (22 kgf) to 250 lb (113 kgf).

Electric Motor Actuators. An electric motor provides the actuating energy to place the valve in the desired position. Upon loss of power, the failure mode is fail-as-is. The stem speed may vary from 12 in/min (30 cm/min), known as manufacturer's standard, to 60 in/min (150 cm/min). Special features are required to accomplish stem speeds over 45 in/min (112 cm/min).

Pneumatic Actuators. Pneumatic actuators utilize the motive force provided by a compressed gas such as air, nitrogen, or other inert gas. There are many different types of pneumatic actuators. These include linear, rotary, and linear-to-rotary. Linear-type actuators are used with valves having translating stems. Rotary and linear-to-rotary pneumatic actuators are used on valves having rotating stems.

Pneumatic actuators can generate very high thrust and an extremely high torque. The length and speed of stroke may vary considerably, depending upon the type of pneumatic actuator. These actuators are capable of providing either fail-open or fail-close failure mode upon loss of air. Piston-type air actuators are furnished with springs to open or close the valve upon air failure. Diaphragm air actuators have limited thrust and torque generation capabilities due to limits on air pressure because of diaphragm strength. In addition, the diaphragm actuators have limited stroke ranging from 1 to 4 in (25 to 100 mm).

Air-vane pneumatic actuators are used with quarter-turn valves, and they can be directly mounted on the valve stem.

Hydraulic Actuators. Hydraulic actuators utilize pressurized liquids, usually oils but sometimes water, or the process liquid is used to provide the motive force for actuating the valve. Like pneumatic actuators, these actuators can help achieve fail-open or fail-close failure modes.

Solenoid Actuators. Solenoid actuators have short-stroke and low-thrust capabilities. Two types of actuating methods are used in solenoid valves: direct acting and pilot operated. In the direct acting solenoid valve, the disc is lifted off the seat to a fully open position by magnetic flux generated by energizing the coil, and the disc is returned to its seat by deenergizing the coil. The pilot-operated solenoid valve utilizes the system pressure to provide the actuating force.

Solenoid valves can accomplish all failure modes.

SELECTION AND APPLICATION GUIDELINES

The following guidelines are provided to assist in selecting a suitable valve for any application. These guidelines are intended to cover all physical features and capabilities or limitations of different types of valves and which may be suitable for one particular application. The user must fully evaluate the pros and cons of using a particular type of valve and arrive at the most suitable selection, taking into consideration the life span expected and costs involved.

Identify Application Characteristics

1. Identify the system and various modes of system operation: startup, normal operation, accident condition, standby, shutdown, et cetera.

2. Identify the flow medium and its properties, flow rate during all modes of system operation, system design pressure, and design temperature.

3. Identify the pipe size, pipe wall thickness, piping material, piping joint(s) to be used, and any other information which relates to valves in the system.

4. Establish the code of jurisdiction, which governs the construction of the system, component, or equipment. The codes related to piping systems are discussed in Chap. A4. The applicable code (ASME B31.1, B31.3, B31.5, B31.8, B31.9, B31.11, ASME Sec. I, Sec. III, Sec. VIII, etc.) does contain requirements for valves. Become familiar with the code requirements for valves in general and for the system under consideration in particular.

5. Identify the valve standards referenced in the code of jurisdiction. Each code lists the valve standards that are acceptable for construction of valves to be used in piping within the jurisdiction of the code. Use valves complying with the valve standards listed in the code of jurisdiction. The most commonly used valve standards are listed in the beginning of this chapter.

6. Establish the pressure drop through the valve that can be critical on overall system performance. For example, the pressure drop through the stop valve(s) in the main steam system of a power facility is critical to achieve the guaranteed performance of the plant.

Select Type of Valve Required

1. In reference to the various modes of system operation, determine the function(s) a valve has to perform.

2. Based upon the valve functions, the valve type(s) can be selected. The valve needed may be an isolation valve or a stop valve. What are the choices available?

3. Similarly, the valve required may be a check valve or the valve required to stop the flow in reverse direction. There are many different types of check valve. Which is the most suitable?

4. Does flow need to be throttled? Based upon the amount of throttling required, one may select a globe valve, butterfly valve, or a needle valve. Size limitations also play a role in the availability of these valves.

5. If flow has to be regulated and controlled based on variation in pressure, temperature, fluid level, or the design limitations of a component or equipment,

TABLE A10.11 Valve Types and Typical Applications

	Service/Function			
Valve type	Isolation or stop	Throttling	Pressure relief	Directional change
Gate	yes	no	no	no
Globe	yes	yes	no	yes (note 1)
Check	note 2	no	no	no
Stop check	yes	no	no	no
Butterfly	yes	yes	no	no
Ball	yes	note 3	no	yes (note 4)
Plug	yes	note 3	no	yes (note 4)
Diaphragm	yes	no	no	no
Safety/relief	no	no	yes	no

Notes:

1. Only angle-globe valves can be used for a 90-degree change in direction of flow.
2. Check valves (other than the stop-check valves) stop flow only in one (reverse) direction. Stop-check valves can be and are used as stop, block, or isolation valves, in addition to being used as a check valve.
3. Some designs of ball-and-plug valves (contact the valve manufacturer) are suitable for throttling service.
4. Multiport ball-and-plug valves are used for changing the direction of flow and mixing flows.

the valve required would be a control valve. Refer to selection and application of control valves section at the end of this chapter.

6. The first step is to determine the valve type: *isolation, check*, or a *control valve.* If the component or the piping system is required to be protected against overpressure built up, then one of the pressure-relief devices ought to be selected.

7. To begin the selection process, Table A10.11 provides a good starting point.

8. The next step is to narrow down the choices of valves to be used. As discussed earlier, there are several different designs available in different categories of valves. For example, large-size butterfly valves are preferred to large-size gate valves as stop valves in low-pressure and low-temperature cooling water systems, due to space, weight, actuator, and cost considerations.

Select Valve Size

1. Pipe size will indicate the valve size unless there are other requirements that may make it necessary to install a smaller- or larger-than-pipe-size valve.

2. The valve availability is one of those factors. In addition, some valves are not manufactured in certain small or large sizes. Refer to valve vendor catalogs and evaluate application requirements and valve features in addition to space, cost and, operational concerns.

Select Valve-End Connection

1. Types of piping joints to be used depend upon several considerations, such as ease of removal and replacement of components in the piping system, frequency of repairs and replacements, life span of valves, and trim items. For example, the power plants utilize welded joints, whereas the petroleum refineries and chemical plants use flanged joints predominantly. Use of threaded, soldering, and brazing joints is common in plumbing piping systems.

2. Check code requirements concerning piping joints. At times codes prohibit or restrict the use of different types of joints based upon size, pressure, temperature, materials of construction, flow medium, and other criteria. When leakage through joints is a concern, use of a threaded joint may be prohibited or limited by the code or by prudent engineering.

3. When valve-body material is different from the pipe material, transition pieces may be needed to attach the valve to piping.

4. To prevent galvanic corrosion between valve and pipe flanges, insulating flanges may be needed.

Select Valve-Body, Bonnet, and Trim Materials

1. Flow medium and its characteristics will help in selecting the valve-body and valve-trim materials. The flow-medium characteristics include: liquid, gaseous, vapor or two-phase flow, viscosity, clean fluid, dirty fluid, suspended impurities, pH-value (0 to 14), and pressure, and temperatures during different modes of system operation. Nonmetallic, stainless steel, or high-alloy piping may be utilized. Accordingly, valve materials should be selected keeping in mind the manufacturing limitations and availability of valve types and sizes required.

2. Flow rate will dictate requirements for the valve-flow coefficient. Should the valve be full port, standard port, reduced port, et cetera?

3. Valve materials for pressure-retaining parts must be in accordance with the applicable code and acceptable valve standard.

4. Materials for valve parts other than pressure retaining parts must be suitable for withstanding all conditions of loading and assist the valve in performing its design functions.

Identify Seat-Leakage Criteria

1. Determine the minimum and maximum acceptable seat leakage across the valve seat when the valve is in closed position during various modes of system operation. In some cases the seat leakage may not be of concern, while in other applications, such as in piping handling cryogenic fluids, radioactive materials (liquids, gases, and mixtures) or toxic and hazardous waste materials may be a serious concern and must be limited to an acceptable level.

2. The applicable valve standard may specify the acceptable seat leakage when the valve is tested in the shop. Alternatively, more stringent criteria may be specified. Refer to the valve standard, such as MSS SP-61 and API 598.

Identify Requirements for Valve-Stem Packing Arrangement

1. If the valve is to be connected to a piping system or to equipment which is continuously maintained at vacuum, the stem packing must be suitable to prevent inward air leakage. Inverted–V Teflon packing is used to temperatures up to 400°F. Graphite packing may be specified at temperatures above 400°F. Contact the valve manufacturer to ensure effectiveness of the packing.

2. When fugitive emission is a concern, specify the requirements for a suitable packing arrangement.

3. In cryogenic applications the leakage of fluid across the valve seat must not come in contact with the stem packing. Refer to Chap. C8.

Be Aware of Piping Layout and Valve Orientation

1. If a valve is located near or close to an elbow, tee-branch connection, or another source of turbulence, precautions must be taken to select the valve that can withstand flow conditions or modify the layout. It is particularly true for swing check and butterfly valves.

2. If a gate valve is installed with its stem in a horizontal plane, the bonnet cavity may not fully drain after hydrostatic testing, be filled with condensed vapor when the system is shut down, or contain chemicals if the system was cleaned using chemicals. Such situations may result in damage to the valve due to pressure binding or chemical reaction. A drain or vent in the bonnet may be needed to alleviate potential problems.

Take into Consideration Maintenance Requirements

1. Maintenance considerations are important for the selection of valves. The plant designer must provide for access, assembly, and disassembly of valves.

2. Space limitations may impose restrictions on the use of a particular type of valve even though it may be the most suitable valve for the application. Select an alternative valve.

3. When plants are designed for long life, the valves selected must not require frequent maintenance, with the exception of items such as the replacement of packing or lubrication.

Initial Cost

1. A low-initial-cost valve may necessitate frequent repairs or replacements of the valve or valve parts. Be aware of future costs involved.

2. High initial costs may be prohibitive. Therefore, a compromise may be made to choose the right valve for the application.

Actuation Requirements

1. Does the valve require an actuator? If needed, select the proper actuator, keeping in mind the facilities and utilities available at the location.

2. Failure mode desired will dictate the type of power actuator.

3. Gear-actuated valves require special attention with regard to the size of the actuator. The actuator size would depend on the maximum rim pull that can be applied without use of crowbars, rods, or hammers. The rim pull may vary from as low as 50 lb (22 kgf) to 250 lb (113 kgf). Consideration must be given to the plant-operating individuals and their safety and health. A high rim pull may result in injury to an operator.

The above-stated guidelines are provided to assist the user in arriving at a reasonable solution for selecting and applying valves. They are not to be considered the only guidelines. They are for initiating the thought process and offering users critical information for making a final decision.

CHAPTER A10

PART 2 SELECTION AND APPLICATION OF CONTROL VALVES

Dr. Hans D. Baumann, P.E.
Fisher Controls International, Inc.

DEFINITION OF CONTROL VALVES

Unlike valves in a piping system that primarily serve to shut off, drain, fill, or divert, control valves are a part of an automated control system. They are considered the ''final control element'' in an automated and usually very sophisticated ''control loop.'' Aside from the control valve, the ''loop'' consists of a transmitter that measures the variable to be controlled (usually pressure, flow, level, or temperature) and a controller (nowadays a computer of sorts). Following an error in the variable to be controlled (such an error being sensed by the transmitter), the controller sends a signal change to the control valve which, in turn, responds by altering the flow rate through the valve sufficiently to restore the desired variable (such as pressure, for example).

Control valves have basically three interactive components: (1) a valve body subassembly (either with a reciprocating or rotating stem), (2) an actuating device (usually a spring diaphragm type), (3) a valve positioner (an instrument that converts an electronic control signal from a controller, or computer, into an air signal to control the position of the control valve stem), and (4) an airset or regulator to supply air pressure to the positioner (see Figure A10.34).

HOW TO SPECIFY CONTROL VALVES

The first step in specifying a control valve is to define its function in the given application. In some, it will operate as an on-off valve that opens or closes following the commands of a programmable controller on, say, a batch process. In others, it will be used to remotely set a flow rate in a process—that is, it will be used as a manually controlled variable orifice in a pipe (an open-loop application). Finally, in more sophisticated applications, the control valve will serve as the final control

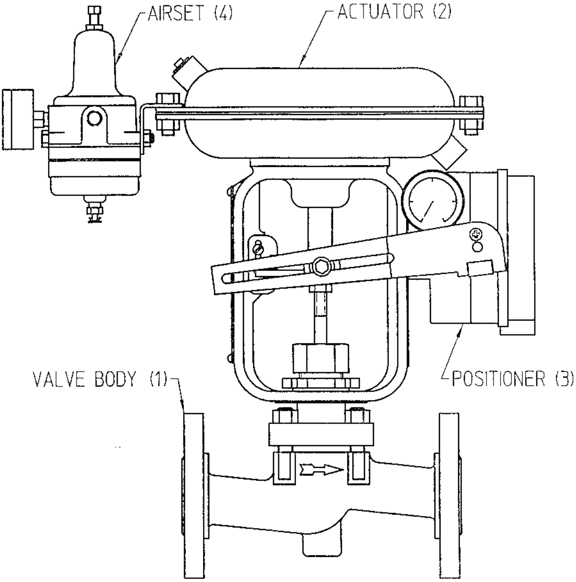

FIGURE A10.34 Typical globe-style control-valve assembly with various components. *(Courtesy of H.D. Baumann, Inc.)*.

element in a process control loop and respond to the sometimes infinitely small variations of a signal coming from a controller (typically a computer). The signal will be generated in response to a deviation in the desired temperature, pressure, or level of a process fluid as measured by a transmitter.

Application Classes

In the first type of application, any on-off valve with a pneumatic or electrical actuator (say, for example, a ball valve) may suffice. The requirements are to provide tight shutoff (perhaps with a Teflon® seat) to withstand the pressure, temperature, and corrosiveness of the fluid, and, finally, to have sufficient flow capacity. No valve positioner is required (see Figure A10.35).

Open-loop control requires a higher level of sophistication, such as a characterized valve plug and good repeatability. The latter calls for a valve/actuator combination with low dead band (low friction). A valve positioner, a device that is essentially a stem position controller with an accuracy between 0.5 and 1.0 percent of stem position, may be required. Controlling the stem position may not always assure that the valve plug or ball moves the required amount unless the stem or shaft is pinned or welded to the ball, vane, or plug (unless fluid pressure assures constant contact). See Figure A10.36.

The modulating control valve that is part of a control loop is the most sophisticated device. Typical features are plug or ball with either linear or equal percentage flow characteristic, low-friction packing and actuating devices, and, if required, low-

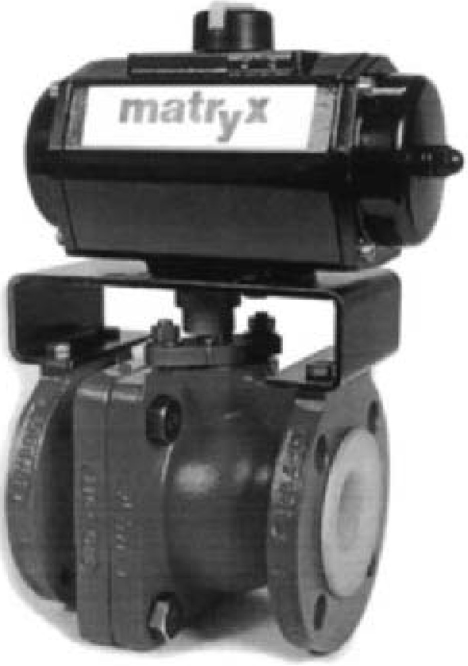

FIGURE A10.35 Typical automated ball valve *(Courtesy of XOMOX Corp).*

noise or anticavitation features. These are in addition to the previously stated requirements.

Figure A10.37 shows an eccentric rotary plug valve with a low noise restrictor in the valve outlet port. Part of the pressure drop at moderate to high flow rates occurs across this slotted device. The smaller jets created by the slots produce about 10 to 15 dBA less noise than the valve itself.

Flow control is only possible if the control valve can reduce some of the fluid pressure. Such pressure reduction (also used for valve sizing) typically amounts to 5 to 10 percent of the maximum pump pressure. This makes a streamlined valve trim (highly desirable for on-off valves) actually less desirable for control purposes. It takes much higher velocities with a streamlined trim or valve (hence, more noise or cavitation) to achieve a certain pressure drop than with a nonstreamlined valve.

Signals from controllers to control valves are 3 to 15 psi (0.2 to 1.0 bar) if pneumatic or 4 to 20 mA if electronic. Digital signals will be used in the future once the question of fieldbus standardization has been resolved.

Control Valve Styles. Let's take a look at the characteristics of some of the most commonly used control valve types:

- *Globe valve* The globe valve (see Figure A10.34), which is the most widely used type of control valve, has a screwed-on, integrally attached, or cage-supported seat ring, and typically a lathe-turned, single-seated valve plug. Larger valves or

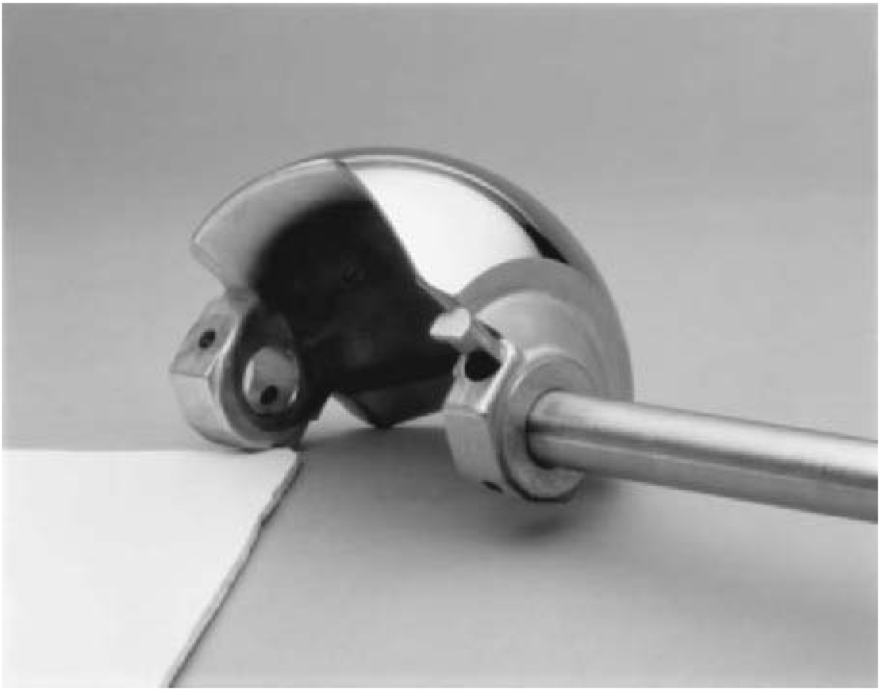

FIGURE A10.36 Section of V-ball showing pinned stem to ball. *(Courtesy of Fisher Controls International, Inc.).*

high-pressure valves may have designs such that the valve plug is cage-guided and pressure-balanced to reduce actuator force requirements. Globe valves are cost effective in sizes NPS 2 (DN 50) and below and are available in sizes as small as NPS ¼ (DN 6) for research applications. End connections are flanged or threaded. High-pressure or high-temperature valves can be welded to the piping. NPS 2 (DN 50) and smaller can be provided with socket-welding or threaded ends. NPS 2½ (DN 65) and larger are generally butt-welded or flanged.

- *Angle valves* Angle valves are a special variety of globe valves typically having an inlet port at a right angle to the valve stem and a discharge port in line with the valve orifice. Typical applications include flashing and erosive fluids.
- *Three-way valves* As the name implies, three-way valves are globe valves (or some rotary valves) that have three access ports and two plugs and orifices opposed to each other. Depending on the flow direction, three-way valves may serve as either mixing valves (where two different fluids enter the valve through two of the ports, and discharge as a mixture through the third), or diverting valves around heat exchangers (for example, where a fluid enters at one port and discharges through either the second or the third port).
- *Eccentric rotary plug valves* Eccentric rotary plug valves are designed especially for modulating control (i.e., they have solid stem connections, low or constant operating torque, a good flow characteristic, and tight shutoff). They feature a

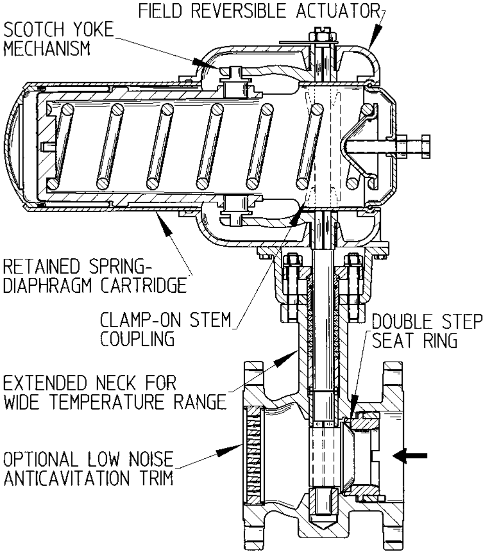
FIELD REVERSIBLE ACTUATOR
SCOTCH YOKE MECHANISM
RETAINED SPRING-DIAPHRAGM CARTRIDGE
CLAMP-ON STEM COUPLING
DOUBLE STEP SEAT RING
EXTENDED NECK FOR WIDE TEMPERATURE RANGE
OPTIONAL LOW NOISE ANTICAVITATION TRIM

FIGURE A10.37 Eccentric rotary plug valve with low noise restrictor built into the valve outlet port. *(Courtesy of H.D. Baumann Inc.).*

lower weight than globe valves and, therefore, have a cost advantage in sizes NPS 3 (DN 80) and above. They are either flanged or wafer-style for installation between flanges (Figure A10.37).

- *Characterized semispherical ball valves* The characterized semispherical ball valve is another form of "designed for modulation" rotary control valve with a backlash-free stem connection. Here, the seal is a thin metal or plastic ring that engages a segmented rotating ball. A V-notch in the ball surface gives a good repeatable flow characteristic. This valve type is popular in the paper industry and is available in either flanged or wafer-style (Figure A10.36).
- *Ball valves* Ball valves have a good shutoff characteristic and high flow capacity. As a result, they are a good choice for on-off or sequencing control. End connections are flanged or wafer-style. Metal-seated ball valves are designed for high temperature applications and can be provided with welded connections. Soft-seated ball valves are used for normal liquid or gaseous fluids up to 482°F (250°C) and where tight shutoff is required (Figure A10.35).
- *Butterfly valves* Except for some special designs with low-torque and low-noise features, butterfly valves for modulating control have to be selected with care. This is because their high-torque (both seating and dynamic) and high-pressure recovery tend to encourage noise and cavitation. A lower-cost valve choice in sizes NPS 6 (DN 150) and above, butterfly valves are typically wafer-style due to their narrow profile.

Actuators. More than 90 percent of all control valves use pneumatic actuating devices—either spring-opposed diaphragm types or piston actuated.

The *spring/diaphragm actuator* is by far the most popular due to its simplicity and ability to fail-safe (that is, the spring force will drive the valve either to close [fail-close] or in the open position [fail-open], depending on process safety requirements, should the air pressure be lost).

Piston actuators provide more dynamic stiffness. In addition, because they use higher air pressures, they are more compact than spring-opposed diaphragm actuators. Other forms of actuation are electric or hydraulic. They are used more for special applications and their use is limited due to higher cost and limited reliability.

Materials of Construction. For noncorrosive use, the material of choice is carbon steel (ASTM A216 Grade WCB, if cast; and A105 when forged). Valve plugs and seat rings are typically ASTM A 351, CF8M (316 stainless steel).

For mild, corrosive applications, valve housings are made from type CF8M (316 stainless steel). However, Teflon®-lined housings and exotic alloys, such as Hastelloy®, monel, or titanium are available for highly corrosive fluids.

For additional information, refer to: Hans D. Baumann, *Control Valve Primer, A User's Guide*, ISA, Research Triangle Park, 1998.

How to Size Control Valves

The flow capacity of control valves is expressed by the coefficient C_v. This is a combination of valve flow area and the valve's headloss coefficient K. It is expressed as

$$C_v = \frac{A \times N_1}{\sqrt{K}} \tag{A10.1}$$

where A is the "vena contracta" area of the valve's orifice, typically 70 percent of the orifice area. C_v is expressed in the flow of U.S. gallons per minute of water when the pressure drop is one psi. N_1 is a numerical constant $= 0.059$ if A is in mm^2, or 38.1 if A is in inch^2. For example, if $K = 1$ and $A = 25$ mm^2, then the $C_v = 25 \times 0.059/\sqrt{1} = 1.475$.

While C_v was initially a liquid flow coefficient, this term can also be used for gases or steam with the proper conversion coefficients as shown below.

We have to distinguish two modes of flow in a control valve which, in turn, governs the use of the correct equation.

1. *Normal Flow* This occurs when the pressure drop across the valve lies below the following limits:

$$\text{For liquids:} \quad \Delta p_{\text{lim}} = F_L{}^2(p_1 - p_v) \tag{A10.2}$$

$$\text{For gases:} \quad \Delta p_{\text{lim}} = F_L{}^2(0.5 \times p_1) \tag{A10.3}$$

   where Δp_{lim} is the limited pressure drop across the valve (see equations), p_1 is the valve's inlet pressure, and p_v is the vapor pressure of the respective fluid and at the flowing temperature (all pressures absolute).

2. *Choked Flow* This occurs if the actual pressure drop exceeds Δp_{lim}. CAUTION: Such conditions could cause cavitation in valves handling liquids, or high sound levels with gas or steam. Consult your control valve supplier.

FOR LIQUID SERVICE

Normal Flow

When Δp is less than $F_L^2(\Delta p_s)$, use equations in this column.

Choked Flow

When Δp is more than $F_L^2(\Delta p_s)$, use equations in this column.

Remarks

Δp_s = Maximum Δp for sizing. Use $p_1 - p_v$ when outlet pressure is higher than vapor pressure, or use

$$P_1 - \left(0.96 - 0.28\sqrt{\frac{P_v}{P_c}}\right) P_v \quad \text{(A10.4)}$$

when outlet pressure is equal to or lower than vapor pressure.

Volumetric Flow

$$C_v = N_2 q \sqrt{\frac{G_f}{\Delta p}} \quad \text{(A10.5)}$$

$$C_v = N_2 \frac{q}{F_L} \sqrt{\frac{G_f}{\Delta p_s}} \quad \text{(A10.6)}$$

Flow by Weight

$$C_v = N_3 \frac{W}{500\sqrt{G_f \Delta p}} \quad \text{(A10.7)}$$

$$C_v = N_3 \frac{W}{500 F_L \sqrt{G_f \Delta p_s}} \quad \text{(A10.8)}$$

where F_L = pressure recovery factor (dimensionless)
G_f = specific gravity @ flowing temperature (water = 1 @ 16°C)
$\Delta p = p_1 - p_2$, psia (kPa)
$N_2 = 11.7$ if q is in m^3/h and p in kPa; $N_2 = 1$ is q is in gpm and p is in psia.
$N_3 = 5.32$ if W is kg/h and p in kPa; $N_3 = 1$ if W is lb/h and p is in psia.
P_c = pressure at thermodynamic critical point, water is 3206 psia (21,370 kPa)
P_v = vapor pressure of liquid at flowing temperature, psia (kPa)
q = liquid flow rate, m^3/h (U.S. gpm)
W = flow in kg/h (lb/h)

FOR GAS AND STEAM SERVICE

Surprising as it may sound, the basic C_v equation can also be applied to gases and steam. The difference here is that the density of the gas changes with Δp, and, since this is a gradual process, the relationship $\sqrt{\Delta p}$ to flow is no longer linear but curved. However, the following simplified equations give reasonable accuracy.

Normal Flow

When Δp is less than $F_L^2(p_1/2)$, use equations in this column.

Choked Flow

When Δp is more than $F_L^2(p_1/2)$, use equations in this column.

Volumetric Flow

$$C_v = \frac{N_4 q}{963} \sqrt{\frac{G_g T}{\Delta p(p_1 + p_2)}} \quad \text{(A10.9)}$$

$$C_v = \frac{N_4 q \sqrt{G_g T}}{834 F_L p_1} \quad \text{(A10.10)}$$

Flow by Weight

$$C_v = \frac{N_5 W}{3.22\sqrt{\Delta p(p_1 + p_2) G_g}} \quad \text{(A10.11)}$$

$$C_v = \frac{N_5 W}{2.8 F_L p_1 \sqrt{G_g}} \quad \text{(A10.12)}$$

TABLE A10.12 Application Guide for Modulating Control Valves (d = mm)

	Pipe size			Typical flow capacities, C_v/d^2						Special service conditions			
Valve Type	DN	NPS	Relative cost(4)	Low Δp(1)	High Δp(1)	Flow chara.	Max. temp. °C	Min. temp. °C	Max. press. ratings	Cavitation	Fiberous	Viscous	Abrasive
Global Valve	8–600	¼–24	1	0.018	0.016	G	400	−268(5)	Class 2500	N(6)	N	N	N
Angle Valve(3)	25–300	1–12	1.1	0.029	0.016	G	400(5)	−268(5)	Class 2500	Y	N	N	Y
3-Way Valve (Globe)	15–150	½–6	1.3	0.016	N	A	200	−30	Class 300	N	N	N	N
Eccentric Rotary Plug Valve	25–300	1–12	0.7	0.021	0.018	G	250	−200	Class 600	N(6)	N	Y	Y(7)
Charac. Segmented Ball Valve	25–300	1–12	0.8	0.04	0.024	G	250	−110	Class 300	N	Y	Y	N
Full Ball Valve	15–600	½–24	0.7	0.05	0.026	A	250	−268(5)	Class 2500	N	Y	Y	Y(7)
Butterfly Valve at 70° open	50–900	2–36	0.6	0.04	0.028	A	250	−30	Class 300	N	N	Y	N

Notes:

[1] Low pressure drops are typically less than 20% of the inlet pressure.

[2] High Δp's are defined as those higher than 40% of the inlet pressure. The valve's flow capacity is restricted due to the onset of vaporization of liquids and sonic flow for gases.

[3] Flow to close.

[4] Relative to Globe valve price (DN 150).

[5] With special bonnets.

[6] Except anticavitation trim.

[7] With ceramic trim.

G = good, N = not recommended, A = acceptable, Y = recommended.

Note:

C_v is a standardized (ISA-S75.01) term to denote the flow capacity of a valve expressed in gallons per minute of water at 60°F when the pressure drop (Δp) is 1 psi. Thus, the flow in gpm = $C_v\sqrt{\Delta p/G_f}$ where G_f is the specific gravity (water @ 16°C (60°F) = 1) and d is the valve diameter in mm. For example, a typical DN 150 globe valve will have a C_v of $0.018 \times 150^2 = 405$ at low Δp. **Caution: Do not select a valve size less than half of the pipe diameter.**

For Saturated Steam

$$C_v = \frac{N_5 W}{2.1\sqrt{\Delta p(p_1 + p_2)}} \qquad \text{(A10.13)}$$

$$C_v = \frac{N_5 W}{1.83 F_L p_1} \qquad \text{(A10.14)}$$

For Superheated Steam

$$C_v = \frac{N_5 W(1 + 0.0007 T_{sh})}{2.1\sqrt{\Delta p(p_1 + p_2)}} \qquad \text{(A10.15)}$$

$$C_v = \frac{N_5 W(1 + 0.0007 T_{sh})}{1.83 F_L p_1} \qquad \text{(A10.16)}$$

where C_v = valve coefficient
F_L = pressure recovery factor
G_g = gas specific gravity (air = 1.0)
N_4 = 323 if q is in m^3/h, p is in kPa, and T is °K; $N_4 = 1$ if q is in scfh, p is in psia, and T is in °R.
N_5 = 14.8 if q is in m^3/h, p is in kPa; $N_5 = 1$ if q is in scfh, and p is in psia
p_1 = upstream pressure, psia (kPa)
p_2 = downstream pressure, psia (kPa)
Δp = pressure drop $p_1 - p_2$, psi (kPa)
q = gas flow rate at 100 kPa and 16°C, m^3/h (scfh)
T = flow temperature [°R = (460 + °F)], (°K = 273 + °C)
T_{sh} = steam superheat, °F (°C)
W = flow rate, pounds per h (kg/h)

Application Guide. Table A10.12 summarizes application guidelines for modulating control valves.

PART B

GENERIC DESIGN CONSIDERATIONS

CHAPTER B1

HIERARCHY OF DESIGN DOCUMENTS

Sabin Crocker, Jr., P.E.
Formerly Project Engineer, Bechtel Power Corporation
Gaithersburg, MD

In today's atmosphere of complex projects, extended liabilities, tight cost controls, and strict quality standards, it is essential that all phases of a project, from inception to operation, be effectively communicated and correctly executed. To this end, contract documents, design documents, fabrication details, procedures, and specifications are developed to communicate, monitor, and document the design, fabrication, and erection of piping systems precisely. The number and variety of documents to be prepared for a particular piping system are determined not so much by the importance of the piping system as by the complexity of the system and by the interface requirements of the owner, the design organization, the contractor, the material suppliers, and the regulatory agencies. In the following sections, the documentation requirements of a complex project are illustrated to provide a broad overview of the hierarchy of documents. However, since the specific requirements of a project are driven by many variables, such as the owner's requirements, budgets, market conditions, company practice, and licensing requirements, the discussion here should be considered as a guideline only.

In this chapter all the principal design documents normally prepared for a complex piping system are identified, and their roles in the overall project are described. Note, however, that future developments in engineering tools might dictate variations from the documents described here. With the ongoing development of sophisticated computer software, several related design documents may be developed from one database with the capability to extract information as required. For example, pressure drop and pipe stress analysis calculations may be executed from a physical piping drawings database.

The production and management of design documents may be influenced by outside parties. There are many industry and national standards that provide guidance in the preparation and control of design documents. Conformance to certain international standards is often mandatory. The references listed below contain standards for the preparation and control of design documents. The list is based on current practices in the United States. Where need for clarity exists, the reference is accompanied by a statement of field of applicability. The list is not all-inclusive;

engineers responsible for the preparation of design documents must, from time to time, review the current codes and standards in order to comply with and take advantage of the changes in the industry which are expected to continue as computerized drafting and preparation of text and record keeping improve. Additionally, where unique requirements exist, as in shipbuilding, the system design evolution process is governed by specialized methods. One reference is provided below for ship system design practice.

The military (MIL) and Department of Defense (DOD) standards and specifications referenced below provide a number of generally useful concepts and procedures for producing and maintaining design documents. Not all the information may be directly applicable to the field of interest of this handbook; however, the referenced documents should not be ignored by anyone setting up a system of design document production and control because the information is of fundamental importance to an organized approach to the task.

1. ASME Boiler and Pressure Vessel Code, Section III, NCA-3252: Contents of Design Specifications. (The American Society of Mechanical Engineers, Three Park Avenue, New York, NY 10016–5990, USA.)
2. ANSI/ASME N626.3: Qualifications and Duties of Personnel Engaged in ASME Boiler and Pressure Vessel Code Section III, Division 1 and 2 Certifying Activities. (The American National Standards Institute, 11 West 42nd St., New York, NY 10036.)
3. U.S. Department of Defense Index of Specifications and Standards (DOD ISS). Naval Publication and Form Center ATT: NPODS, 5801 Tabor Avenue, Philadelphia, PA 19120–5099:
    - MIL-STD-481A Configuration Control; Engineering Changes, Deviation and Waivers, Short Form
    - DOD-STD-480A Configuration Control; Engineering Changes, Deviations and Waivers
    - MIL-STD-483A Configuration Management Practices for Systems, Equipment, and Computer Programs
    - DOD-D-1000B Drawing, Engineering and Associated List
    - MIL-D-8501B Drawing, Undimensioned, Reproducibles, Photographic and Contact, Preparation of
    - ANSI Y14.1, to be ordered from ASME unless the requestor is in the Navy
4. ANSI Y14.1, Drawing Sheet Size and Format (For ANSI ‘‘Y,’’ use ASME address.)
5. ANSI Y14.2, Line Conventions and Lettering. Drawings prepared under this standard usually are adequate for micrographic reproduction. (For ANSI ‘‘Y,’’ use ASME address.)
6. ANSI Y14.5M, Dimensioning and Tolerancing (For ANSI ‘‘Y,’’ use ASME address.)
7. ISA-S5.1: Instrument Symbols and Identification. This reference includes a standard for the amount of instrumentation detail that the piping designer would show on the piping and instrumentation diagram. The U.S. Nuclear Regulatory Commission has adopted a fairly current edition; users should verify that subsequent editions remain acceptable for U.S. nuclear work. (Instrument Society of America, 67 Alexander Drive, P.O. Box 12277, Research Triangle Park, NC 27709.)

8. NMA MS102, National Micrographics Association Drafting Guide for Microfilm has been superseded by ANSI Y14.2, Line Conventions and Lettering, and by MS23. Contact the Association for Information and Image Management International, 1100 Wayne Ave., Silver Spring, MD 20910, for current information. Also, government regulations may dictate certain documentation requirements.
9. ISO 9000 Series Standards relating to quality control and quality assurance.
10. Harrington, Roy L., ed., *Marine Engineering,* Society of Naval Architects and Marine Engineers, Pavonia, NJ, 1992; ISBN 0-939773–10–4.
11. For additional standards applicable to piping design see Chap. B3, Piping Layout, in this handbook.

References 1 and 2 cover the ASME Code requirements for the Design Specification and the certifying activities incidental to completion of the manufactured and erected work. References 3–8 have been required for some projects or they have been used as sources of guidance in the physical aspects of design and drafting. Reference 9 provides quality assurance and control requirements, which are being specified increasingly for piping and other equipment, including services. References 10 and 11 contain information on piping design and the design process itself.

In the United States, federal, state, and local laws apply to various piping systems; in other countries, similar laws may prevail. For example, the U.S. Code of Federal Regulations (CFR), Title 10, Part 50 mandates strict requirements for the design, construction, and operation of piping systems in a nuclear production or utilization facility. State and local governments generally invoke the ASME B31, Pressure Piping Code (Section B31.1 for Power Piping; B31.3 for Process Piping; etc.); and the ASME Boiler and Pressure Vessel Code (Section I, Power Boilers; Section II, Materials; etc.). Laws aimed at protecting the environment may also impact the design of some systems. Parts of the International Standards Organization (ISO) requirements, Ref. 9, are often imposed on piping design projects worldwide. Chapter A4 provides additional information on codes and standards in general. Other chapters provide more detailed information as necessary. The designer becomes familiar with the regulations prevailing at the location of the project by independent research and conference with the owner and local authorities.

PROJECT EVOLUTION

The typical project evolution can generally be divided into three principal stages. The first stage comprises inception, assignment of responsibilities, preliminary design, and estimating. The second stage comprises detailed design, procurement, and definitive cost estimating. (Depending on the project schedule, production of hardware, site preparations, and construction may also be initiated at this stage.) The third stage comprises completion of engineering, production of equipment, erection, start-up, and commercial operation of the systems. Although the demarcation between the various stages may vary with the organization performing the work, the concept remains unchanged. The following discussion describes the various documents that are normally prepared in each phase of the project.

For another sequence, see Ref. 10, pages 5–10, where the *design spiral* is discussed. And, see pages 35 and 36 for a discussion of the *computer product model* now finding use in ship design and production practice. The art is evolving rapidly, and future models may offer even better results than those discussed here. For a detailed discussion of the major effects of computerized methods on the way that piping design is done today, see Chap. B3 of this handbook.

FIRST STAGE

Contract Specifications

Contract specifications are normally prepared under the sponsorship of the owner to define the owner's basic requirements of the piping system(s). The contract specification establishes the applicable codes and standards, the owner's requirements, and the obligations of the parties involved in the project. It is expected that the organization charged with the development of the design will develop all design data (to the satisfaction of the owner) not expressly provided by the owner in the contract specification.

Codes and Standards

Although codes and standards are not prepared by any of the parties involved in a project, they are discussed here because of their importance.

New or retrofit construction of almost every type of facility is usually regulated by a government agency at the federal, state, and/or local level. Regulators establish safety standards for the purpose of protecting workers and the general public. The regulators may directly issue these regulations or they may invoke industry standards by reference. Furthermore, in locales where no laws exist to regulate safety standards, the owner (as advised by the underwriter) may mandate compliance with certain national construction codes or standards. Also, the piping industry regulates the safety of its projects by establishing minimum design requirements. Therefore, prior to proceeding with the design, the design engineer must establish what the regulatory requirements are. For a detailed discussion of codes and standards, refer to Sec. A, Chap. A4 of this handbook.

Because codes and standards have a significant impact on the project, it is paramount that the codes and standard to which the project must conform be established in the early stages of the project, preferably in the contract specification.

Design Criteria

Before the detailed design is begun, it is usually advantageous for the project to prepare a comprehensive set of documents defining the system design criteria. This criterion may be part of overall project design criteria or may be a separate document prepared solely for the piping design. In either case, the design criteria should reiterate the design requirements delineated in the contract specification and should define the applicable codes and standards, environmental conditions, design parameters, and other pertinent design bases that will govern the work. The design criteria can be updated as the design progresses to reflect any change in the design basis.

Calculations

Calculations are documents prepared to support the establishment of flow rates, system pressures, temperatures, pipe and vessel wall thickness, heat transfer rates, and other design parameters. Calculations are also prepared for the pipe stress and flexibility analysis and pipe support design.

Because calculations form the foundations for the piping system design, their quality is paramount. The documents used for procurement, construction, and licensing must be supported by suitable calculations. Because the design process is an iterative process, it is usual practice to issue calculations at various stages of completeness, based on firmness of the design input. The intended use of the calculation must be commensurate with the reliability of the results. Calculations may be issued as ''preliminary status'' for in-house review, estimating, and bidding. Unless project conditions dictate otherwise, award of contracts, fabrication, and erection should be based only on final calculations derived from firm data. If calculations are not firm, precautions must be taken to minimize the impact of any changes resulting from changes in the calculation results.

System Descriptions

The many organizations engaged in piping system design may vary the format and content of *system descriptions (SDs)* from that described here based on their needs. Systems whose operation may have public safety implications (e.g., nuclear power plant systems and chemical plant systems) may require very detailed system descriptions.

The purpose of the system description is to set forth, specifically in writing, the functions, intent of the design, and major features of the system. Since some systems need mechanical, electrical, and control system discipline inputs, each discipline may prepare its own system description, or alternatively, one document containing all discipline criteria may be prepared. Customarily, the mechanical discipline assumes the lead for preparing system descriptions for piping systems. The four major topics covered in a typical SD are (1) system design bases, (2) operating modes (start-up, normal, shutdown, emergency, or as appropriate), (3) descriptions and performance ratings of major equipment, and (4) control concepts.

The design basis stated in the SD is used to develop the system flow diagram (which shows the features necessary to accomplish the design basis) and the piping and instrumentation diagram (which shows the basic controls, interlocks, pipes, valves, vessels, pumps, and miscellaneous equipment comprising the system). Therefore, the system description is important in the development of the documents used in procurement, manufacturing, fabrication, and erection.

Table B1.1 presents topics to be covered in a system description applicable to fossil fuel and nuclear power plants. Systems for other uses may not require all the topics listed or may require topics not covered in the table. In any event, the SD should include no more and no less than what is required to fulfill the purpose stated above. In this example, no more information is presented than is necessary to obtain the construction and operating permits from the government authorities and to provide direction to the users of the document (designers, engineers, operators, vendors, etc.).

System Flow Diagram

The *system flow diagram (SFD)* serves to illustrate the system description. To realize full benefit from the SFD, it should be issued with the SD. The SFD extends the purpose stated for the system description by schematically showing the operational relationships among the major system components and by stating the design and

TABLE B1.1 Topical Outline: System Description

- Function
- Design bases
  - Safety design bases*
  - Contract design bases†
  - Codes and standards
- Description
  - General description
  - System operation
  - Description of principal components
- Unresolved matters‡
- References to the sources of design criteria

* Applicable if code and/or law prescribes safety design bases. Another area subject to law is the environment; for some systems Environmental Design Bases would have to be identified.

† Power plant practice names this section Power Generation Design Bases. Other industries use titles appropriate to their conditions.

‡ This section is used to track unresolved matters during design development, and it is closed out with ''None'' in the final issue of the system description.

expected process variables for selected modes of operation. Table B1.2 presents a list of topics to be included and excluded from the SFD. Figure B1.1 is a portion of a typical system flow diagram based on the concepts described above.

Piping and Instrumentation Diagram

The *piping and instrument diagram (P&ID)* provides a schematic representation of the piping, process control, and instrumentation which shows the functional relationships among the system components. The P&ID also provides important information needed by the constructor and manufacturer to develop the other construction input documents (the isometric drawings or orthographic physical layout drawings). The P&ID provides direct input to the field for the physical design and installation of field-run piping. For clarity, it is usual practice to use the same general layout of flow paths on the P&ID as used on the system flow diagram.

The P&ID ties together the system description, the system flow diagram, the electric control schematic, and the control logic diagram (beyond the scope of this handbook). It accomplishes this by showing all the piping, equipment, principal instruments, instrument loops, and control interlocks. The P&ID contains a minimum amount of text in the form of notes (the system descriptions minimize the need for text on the P&ID). The first P&ID in the set for the job should contain a legend defining all symbols used; if certain symbols are defined elsewhere, it may be appropriate to only reference their source. The P&IDs are also used by the start-up organizations for preparing flushing, testing, and blowout procedures for the piping system and by the plant operators to operate the system. The correctness and completeness of the SD, SFD, and P&ID drawings are crucial to the success of the start-up program.

TABLE B1.2 Topics Covered: System Flow Diagram*

Flow Diagrams should show the following:
- All major equipment
- Equipment names
- Equipment identification numbers
- Major bypass and recirculation lines
- Control valves
- Valves required to demonstrate routing for all modes
- Pipe sizes if required by office practice
- Interconnections to other systems
- Equipment ratings or capacities

Flow Diagrams should *not* show the following:
- Pipe class
- Pipe line numbers, unless required by office practice
- Minor bypass lines
- Isolation and shutoff valves
- Maintenance vents and drains
- Relief and safety valves, unless they serve in a mode
- Instruments
- Code class information
- Seismic class information

---

* It is impossible to generalize about system flow diagrams. The foregoing "do and don't" list is subject to as many variations as there are design agents and vendors of packaged systems. For example, piping system line numbers, code class, seismic class, and other information may be found on a flow diagram intended for presentation to another organization having responsibility for the preparation of piping and instrumentation diagrams and other construction documents. In such instances, that flow diagram and that system description convey most of the information required by others to develop the system, and the rest of the information is defined in the contract or attachments to it.

Table B1.3 presents statements of what is included and what is not included in the P&ID. Figure B1.2 depicts a portion of a typical P&ID that complies with the intent of ISA-S5.1, Instrument Symbols and Identification, and with recent electric utility standard practice.

Piping Physical Sketches and Composite Drawings

Isometric or orthographic piping sketches are made, initially of the large-bore piping and later of the small-bore piping, as determined by project requirements. Portions of other piping systems, and structural, electrical, control, and HVAC information may be included in these sketches (in which case they are called composite drawings). These piping drawings form the basis for the working physical drawings such as the system isometrics. The sketches and composites are not used for construction or manufacture; they represent the precomputer version of the present database in a computer-aided design (CAD) system, or one of its several derivative systems, which can provide the design study more efficiently than manual methods in many instances today. Computer-aided design and drafting (CADD) software packages are available from a number of commercial sources.

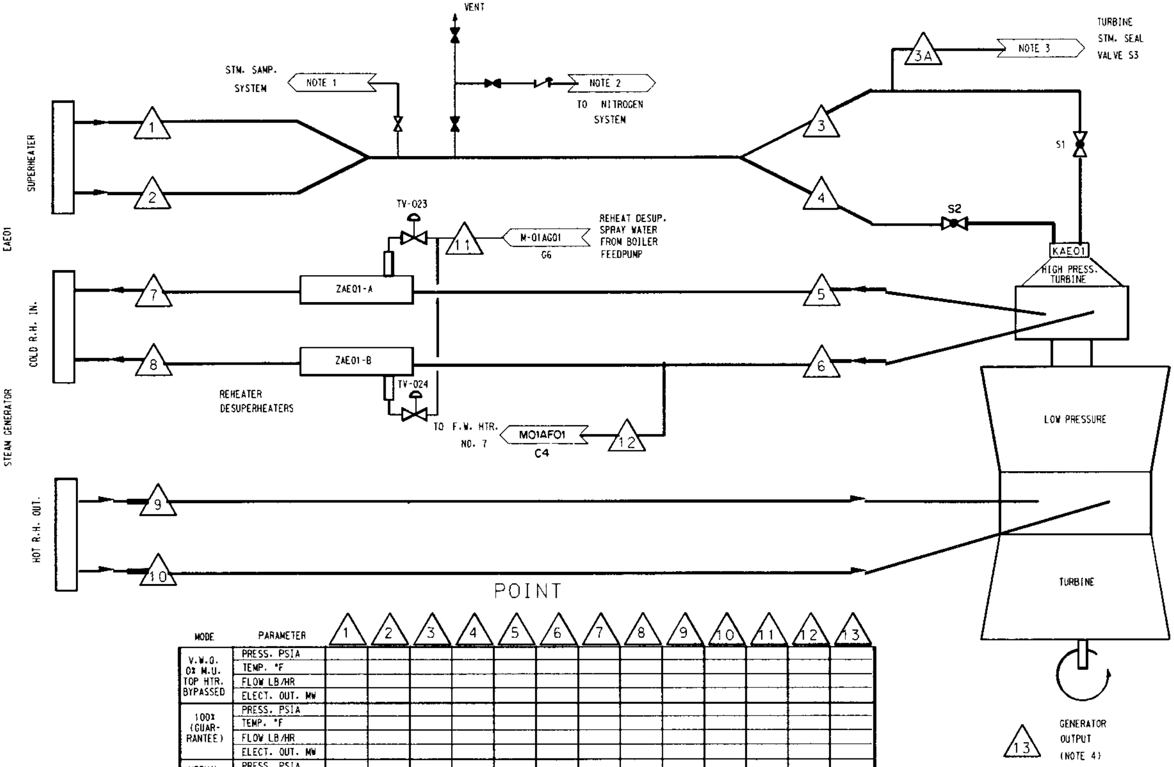
VENT
TURBINE STM. SEAL VALVE S3
NOTE 3
3A
STM. SAMP. SYSTEM
NOTE 1
NOTE 2
TO NITROGEN SYSTEM
SUPERHEATER
1
2
3
4
S1
S2
TV-023
11
M-01AG01
G6
REHEAT DESUP. SPRAY WATER FROM BOILER FEEDPUMP
KAE01
HIGH PRESS. TURBINE
EAE01
COLD R.H. IN.
7
ZAE01-A
5
8
ZAE01-B
6
TV-024
REHEATER DESUPERHEATERS
TO F.W. HTR. NO. 7
MO1AFO1
C4
12
STEAM GENERATOR
LOW PRESSURE
HOT R.H. OUT.
9
10
TURBINE
POINT
13
GENERATOR OUTPUT (NOTE 4)

MODE	PARAMETER	1	2	3	4	5	6	7	8	9	10	11	12	13
V.W.O. 0% M.U. TOP HTR. BYPASSED	PRESS. PSIA													
	TEMP. °F													
	FLOW LB/HR													
	ELECT. OUT. MW													
100% (GUAR- RANTEE)	PRESS. PSIA													
	TEMP. °F													
	FLOW LB/HR													
	ELECT. OUT. MW													
NORMAL LOAD	PRESS. PSIA													
	TEMP. °F													
	FLOW LB/HR													
	ELECT. OUT. MW													
MIN. LOAD	PRESS. PSIA													
	TEMP. °F													
	FLOW LB/HR													
	ELECT. OUT. MW													

FIGURE B1.1 Typical system flow diagram.

TABLE B1.3 Topics Covered: Piping and Instrumentation Diagram

The P&ID should show the following:
- Mechanical equipment
- All valves associated with the process piping
- Instruments significant to the process piping, including:
  - Process pipes
  - Vents and drains
  - Special fittings
  - Sampling lines
  - Permanent start-up and flushing lines
- Specific information as applicable to job:
  - Instrument designations
  - Equipment names and numbers
  - Pipeline identification
  - Valve identification
- All size transitions in line:
  - Reducers and increasers, swages, etc.
- Direction of flow
- Interfaces for class changes
- Seismic category
- Quality level
- Interconnection references
- Annunciation inputs
- Plant computer inputs
- Vendor and contractor interfaces
- Identification of components and subsystems by others
- Reference to a vendor drawing for details not shown
- Intended physical sequence of equipment:
  - Including branch lines, reducers, etc.

The P&ID should *not* show the following unless there is a compelling need to do so for clarity. Items identified by an asterisk may be shown, if necessary.
- Instrument root valves
- Equipment rating or capacity
- Control relays*
- Manual switches*
- Indicating lights*
- Primary instrument tubing and valves
- Pressure, temperature, and flow data
- Vendor package piping which has no interface with engineering or construction*
- Elbows, tees, and similar standard fittings
- Extensive explanatory notes

Remarks: The P&ID for a defined system should be limited to coverage of that system to the maximum practical extent. Other systems that interface with the subject system are shown in phantom if such portions are detailed elsewhere.

Whenever a line is broken off as a matter of drafting convenience, both the break and the continuation are labeled so that one can readily trace the line from both sides of the break. This applies whether the break and continuation are on the same sheet or on different sheets of the drawing.

Except for very simple P&ID, the drawing should have the horizontal and vertical borders marked to permit reference to any small area of the drawing, such as by "Continued at G-7." Care should be taken to ensure that these markings are within the sized field of the drawing so that they will always be reproduced with the drawing regardless of the process used.

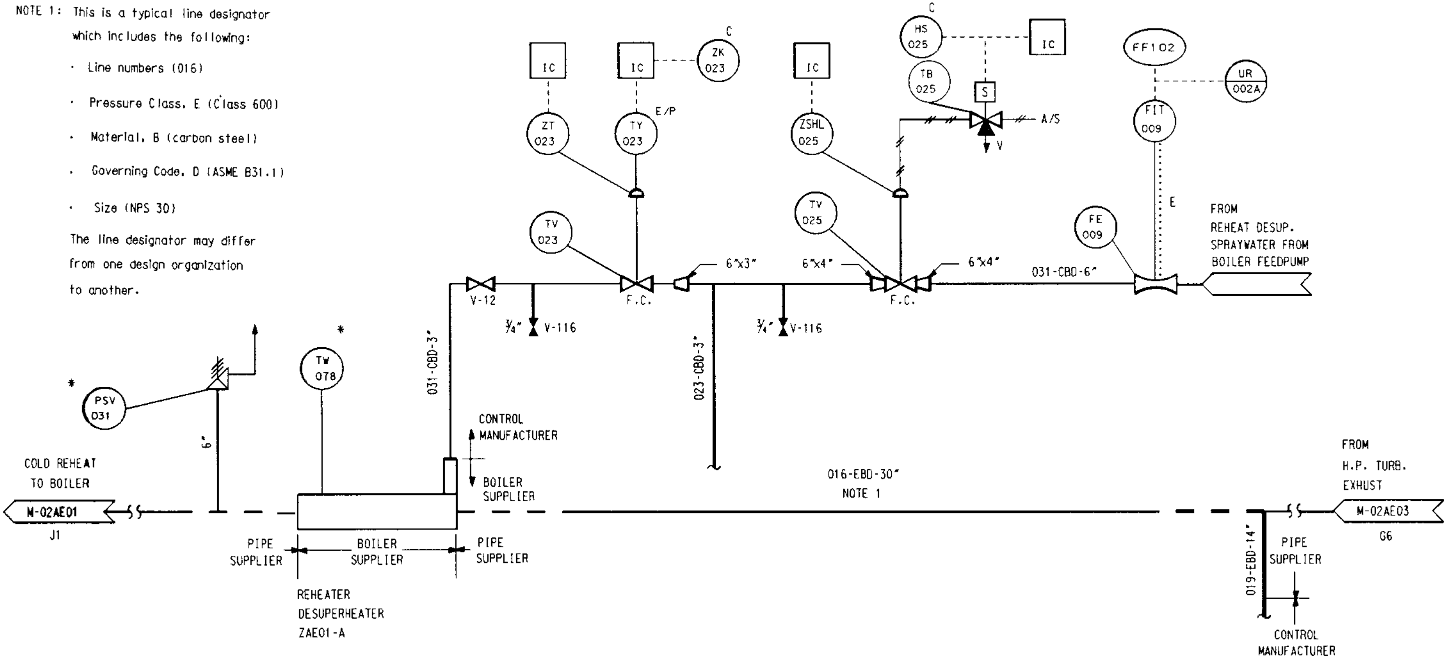

NOTE 1: This is a typical line designator which includes the following:

- Line numbers (016)
- Pressure Class, E (Class 600)
- Material, B (carbon steel)
- Governing Code, D (ASME B31.1)
- Size (NPS 30)

The line designator may differ from one design organization to another.

IC
IC
ZK 023
C
IC
HS 025
C
IC
TB 025
S
A/S
V
FF102
UR 002A
FIT 009
ZT 023
TY 023
E/P
ZSHL 025
E
FROM REHEAT DESUP. SPRAYWATER FROM BOILER FEEDPUMP
TV 023
TV 025
FE 009
6"x3"
6"x4"
6"x4"
031-CBD-6"
V-12
F.C.
F.C.
¾" V-116
¾" V-116
*
*
PSV 031
TW 078
031-CBD-3"
023-CBD-3"
6"
CONTROL MANUFACTURER
BOILER SUPPLIER
COLD REHEAT TO BOILER
M-02AE01
J1
016-EBD-30"
NOTE 1
FROM H.P. TURB. EXHUST
M-02AE03
G6
019-EBD-14"
PIPE SUPPLIER
BOILER SUPPLIER
PIPE SUPPLIER
PIPE SUPPLIER
REHEATER DESUPERHEATER ZAE01-A
CONTROL MANUFACTURER

FIGURE B1.2 Typical system piping and instrumentation diagram.

Composite drawings are used to clarify functional relationships among significant elements of various systems. Figure C10.1 is typical of a composite that might be found in an operating manual or hazards study.

SECOND STAGE

With the completion of the initial draft of the calculations and P&ID, the piping design progresses to the second stage, which consists of the detailed physical design of the piping system, piping stress analysis, and procurement of materials. The types of documents typically issued during this phase are purchase specifications, design specifications, piping erection specifications, piping orthographic drawings, piping isometric drawings, fabrication details, and equipment lists.

Design Specifications

Design specifications are prepared to define the performance requirements for services and materials. The design specifications may be prepared for in-house design work to control the quality of work performed, or the specification may be issued to govern contracted products and services.

For nuclear power plant systems and components required to meet ASME Section III Code requirements, the design specification takes on added importance. A requirement of the ASME Section III Code is that a Design Specification be prepared to provide a complete basis for ASME Section III Division 1 Construction. As a minimum, the ASME Design Specification must define the boundaries of the item covered, the design requirements, environmental conditions, ASME Code Classification, material requirements, operating requirements, effective Edition, Addenda, and Code cases used for construction. Design specifications can stand by themselves, or they can consist of a cover specification incorporating, by reference, all the design documents required to perform the work.

Procurement Specifications

The procurement specification for piping fabrication should define the scope of work, applicable codes and standards, environmental conditions, material requirements, fabrication and examination requirements, testing requirements, and documentation requirements. The specification should reference the applicable design documents (e.g., piping isometric drawings) which govern the work. These documents should be made available to the supplier.

Erection Specification

The specification for piping erection should specify the applicable codes and standards governing the work. The specification should also delineate any fabrication, quality, examination, testing, and documentation requirements imposed beyond those required by the code. Also, all design and fabrication documents should be incorporated into the erection specification.

Physical Design Drawings

General practice among engineering organizations is to prepare orthographic piping drawings. With the development of three-dimensional computer-aided design (3D CAD) software, the designer can check for interference and can generate different views. Once the orthographic drawings are completed, they may be issued for piping fabrication and construction. However, for complex piping systems, it is common practice to develop separate piping isometric drawings for each pipe run. For pipe stress analysis, fabrication, and installation, the piping isometric drawings are easier to use than the orthographic drawings because all the information on the isometric drawing pertains to the piping of interest—the drawing is not cluttered with extraneous information. Also, the isometric drawing is more easily visualized. Figure B1.3 depicts a typical isometric drawing.

Whether the scope of the project dictates that piping spools be shop-fabricated or field-fabricated, isometric drawings are indispensable in relaying the pipe fabrication requirements of the craft.

Stress Analyses

Piping stress analyses is a term applied to calculations which address the static and dynamic loading resulting from the effects of gravity, temperature changes, internal and external pressures, changes in fluid flow rate, seismic activity, fire, and other environmental conditions. Codes and standards establish the minimum scope of stress analyses. Some codes prescribe loading combinations with not-to-exceed stress limits. For specific code requirements, refer to other chapters in this handbook where code requirements relevant to the type of piping system involved are discussed. Chapter B4 of this handbook deals with stress analysis of piping.

Piping Spool Drawings

The piping spool drawing (also referred to as a spool sheet) is the shop detail drawing developed by the pipe fabricator from the piping isometric, or the piping orthographic, for each prefabricated section of piping. Generally, a spool sheet covers only one spool, whether the spool consists of only one fitting or of many piping elements (limited in size only by shipping or handling capabilities). The spool sheet should specify all dimensions, materials, fabrication procedures, examination and testing requirements, and code stamping requirements, as applicable. The spool sheet may also be used to document the performance of the required operations. Figure B1.4 is an illustration of a typical spool sheet.

It is customary for the engineering organization to review the spool sheets to ensure that the fabricator properly interprets the code, specification, and design documents.

Equipment Drawings

The equipment supplier generally submits certified equipment drawings to the engineer. These drawings may be subject to approval by the engineer to ensure that the specification requirements are met. Also, the drawings are used to finalize

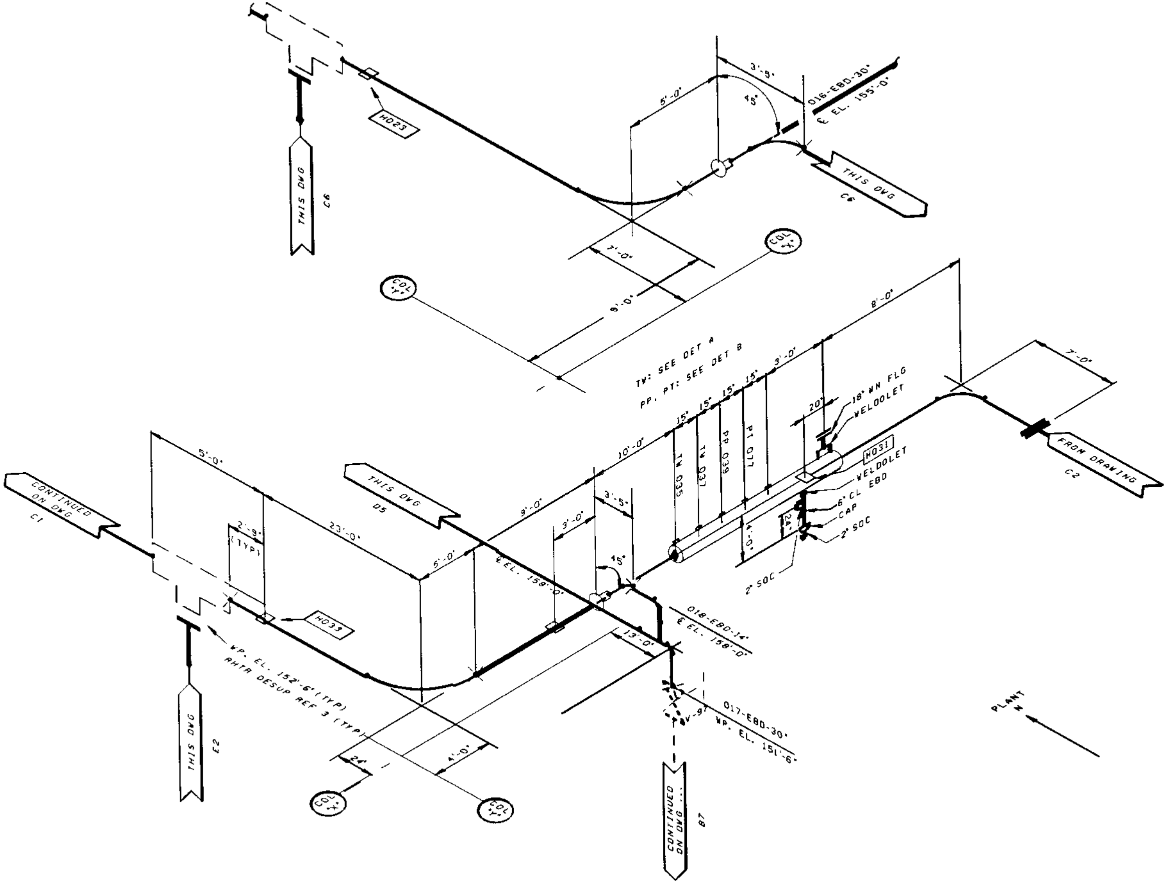
H023
THIS DWG
C6
3'-5"
45°
5'-0"
016-EBD-30"
℄ EL. 155'-0"
THIS DWG
C6
7'-0"
COL "X"
COL "Y"
9'-0"
8'-0"
TW: SEE DET A
PP, PT: SEE DET B
3'-0"
15"
15"
15"
15"
10'-0"
TW 035
TW 037
PP 039
PT 077
20"
18" WN FLG
WELDOLET
H031
WELDOLET
6" CL EBD
CAP
2" SOC
24"
4'-0"
2" SOC
7'-0"
FROM DRAWING
C2
5'-0"
CONTINUED ON DWG
C1
THIS DWG
D5
23'-0"
2'-9" (TYP)
9'-0"
3'-0"
3'-5"
5'-0"
℄ EL. 158'-0"
45°
H033
WP. EL. 152'-6" (TYP)
RHTR DESUP REF 3 (TYP)
13'-0"
018-EBD-14"
℄ EL. 158'-0"
V-97
017-EBD-30"
WP. EL. 151'-6"
THIS DWG
E2
24"
4'-0"
COL "X"
COL "Y"
CONTINUED ON DWG ...
B7
PLANT N

FIGURE B1.3 Typical piping isometric drawing.

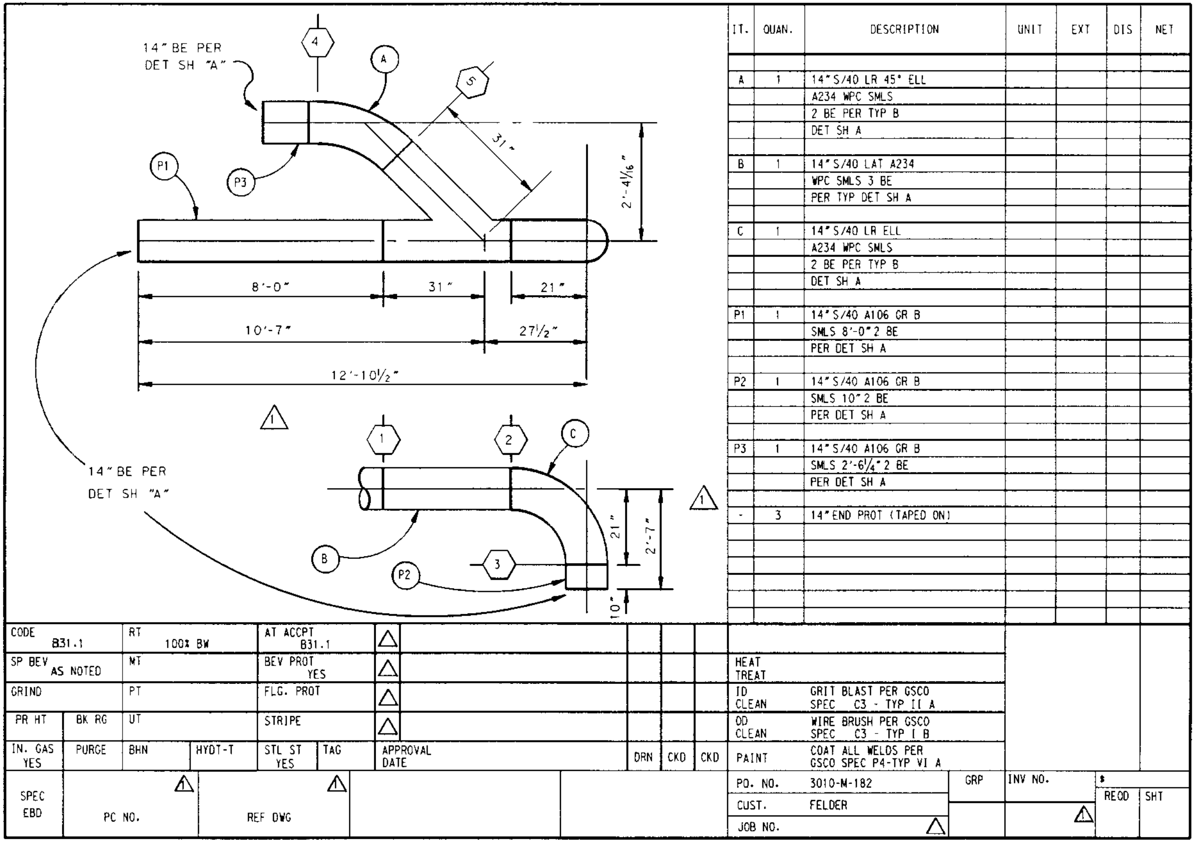
14" BE PER
DET SH "A"
4
A
5
31"
2'-4 1/16"
P1
P3
8'-0"
31"
21"
10'-7"
27 1/2"
12'-10 1/2"
1
1
2
C
1
14" BE PER
DET SH "A"
B
P2
3
21"
2'-7"
10"

IT.	QUAN.	DESCRIPTION	UNIT	EXT	DIS	NET
A	1	14" S/40 LR 45° ELL A234 WPC SMLS 2 BE PER TYP B DET SH A				
B	1	14" S/40 LAT A234 WPC SMLS 3 BE PER TYP DET SH A				
C	1	14" S/40 LR ELL A234 WPC SMLS 2 BE PER TYP B DET SH A				
P1	1	14" S/40 A106 GR B SMLS 8'-0" 2 BE PER DET SH A				
P2	1	14" S/40 A106 GR B SMLS 10" 2 BE PER DET SH A				
P3	1	14" S/40 A106 GR B SMLS 2'-6 1/4" 2 BE PER DET SH A				
-	3	14" END PROT (TAPED ON)				

CODE B31.1
RT 100% BW
AT ACCPT B31.1
SP BEV AS NOTED
MT
BEV PROT YES
GRIND
PT
FLG. PROT
PR HT
BK RG
UT
STRIPE
IN. GAS YES
PURGE
BHN
HYDT-T
STL ST YES
TAG
APPROVAL DATE
DRN
CKD
CKD
SPEC EBD
PC NO.
REF DWG

HEAT TREAT
ID CLEAN GRIT BLAST PER GSCO SPEC C3 - TYP II A
OD CLEAN WIRE BRUSH PER GSCO SPEC C3 - TYP I B
PAINT COAT ALL WELDS PER GSCO SPEC P4-TYP VI A
PO. NO. 3010-M-182
CUST. FELDER
JOB NO.
GRP
INV NO.
$
REQD
SHT

FIGURE B1.4 Typical spool detail sheet.

the facility design; i.e., the physical and operating characteristics of the actual procured equipment are incorporated into the design.

The supplier document should, as a minimum, contain the following information:

1. Component outline dimensions
2. Location and size of service connections
3. Bill of materials
4. Service requirements
5. Maintenance procedures
6. Instruction manual and list of recommended spare parts
7. Diagrams for piping, logic, electrical wiring, and instrumentation

Pipe Support Drawings

The design and procurement of pipe supports are usually accomplished in one of the following ways. The supports can be preengineered by the engineer, or the design can be contracted to a pipe support manufacturer. In the first case, the engineer prepares a detailed pipe support drawing containing the necessary fabrication details and bill of materials. The pipe support fabricator needs only to fabricate the support in accordance with the drawing. In the second case, the engineer specifies the direction of restraint, the type of support (e.g., variable, constant, rigid), and the support load. The support manufacturer prepares detailed shop fabrication drawings for shop use. The support drawings should contain the same level of detail as described for spool sheets. As with spool sheets, the engineer reviews the pipe support drawings for compliance with the purchase specification.

THIRD STAGE

As the piping system design reaches completion and materials begin to arrive at the job site, the project enters the third stage. It begins with the installation of the piping system.

During installation of the piping system, it is imperative that deviations from the design precipitated by variations in field conditions be controlled and reconciled by engineering. For this purpose, engineers and constructors have developed several vehicles by which deviations are identified and resolved. The following sections describe some of these vehicles. The titles of these documents may vary from organization to organization; however, their purpose remains the same.

Supplier's Deviation Disposition Request

If a supplier cannot furnish material conforming to the purchase specifications, the supplier may request a design change by completing a *Supplier's Deviation Disposition Request (SDDR)* form. The request should identify the existing condition, the reason for the change, the technical justification, and the proposed alternative. Engineering can expeditiously evaluate the condition and prepare a reply on the same form if no review of supplier stress analysis calculations, new laboratory test results, or any other significant procedure is required. In some cases the SDDR would be resolved after a reiteration of design and testing submittals, and approvals, as for an original design.

Field Change Request

If a contractor cannot install an item as shown on the design documents (or if the contractor identifies an advantageous alternative to the design), the contractor may request a design change by completing a *Field Change Request (FCR)* form. The request should identify the existing condition, the reason for the change, and the proposed alternative. Engineering can expeditiously evaluate the condition and prepare a reply, often on the same form. For an FCR that involves significant technical problems, the closeout might be conditioned on test results, etc., as described for the SDDR.

Nonconformance Report

When an installation does not conform to the design document, a nonconformance report should be generated to document the discrepancy. The report is submitted to the engineer for evaluation and disposition. The engineer determines whether the condition still satisfies the functional requirements of the original design and either approves the FCR or initiates further action. If the deviation cannot be accepted, the engineer will require that the nonconforming item be repaired or replaced to meet the original design requirement.

Start-up Field Report

As each system installation is completed, the contractor turns the system over to the start-up group for system checkout and performance testing. Any deficiencies encountered by start-up are documented on Start-up Field Reports that are submitted to the engineer for resolution. The report should describe the deficiency and should, if possible, offer a recommendation for corrective action.

Conclusion

The careful and timely preparation of design documents is crucial to the economical and successful installation of a piping system. When prepared in the proper sequence, the engineering documents build on the information developed in the foregoing documents, allowing for an organized and methodical development of the project. Thus the number of iterations in the design process is minimized, and schedule and costs are controlled.

For additional information on some of the topics in this chapter, see Chap. B3, App. E9 and the Index under these headings: CAD, computer-aided design, computer-aided drafting, and computer programs.

CHAPTER B2
DESIGN BASES

Joseph H. Casiglia, P.E.
Consulting Engineer—Piping
The Detroit Edison Company
Detroit, Michigan

The design of a piping system is a straightforward process. The technology is extensive and diverse. Piping design requires the application of theory from a number of engineering disciplines, including fluid mechanics, statics, dynamics, strength of materials, and physical metallurgy. It also requires the knowledge and application of a number of codes and standards.

This chapter identifies and explores the various facets of piping design and highlights parameters that must be considered in completing the design process. The design bases discussed here are generic and should be considered during the course of design of any piping system, regardless of its function. In some cases, a number of the parameters discussed may not be applicable; however, they all should be considered when the initial design concept for the system is formulated and developed.

DEFINITION OF THE TERM DESIGN BASES

Design bases are the physical attributes, loading and service conditions, environmental factors, and materials-related factors which must be considered in the detailed design of a piping system, to ensure its pressure integrity over its design life.

Physical Attributes

Physical attributes are those parameters that govern the size, layout, and dimensional limits or proportions of the piping system. Dimensional standards have been established for most piping components such as fittings, flanges, and valves, as well as for the diameter and wall thickness of standard manufactured pipe. Those standards are identified in the section ‘‘Use of Codes and Standards in Piping System Design.’’ Certain types of piping systems require special design practices for configuration control, to ensure constructibility, or in-service performance. For example, high-temperature, high-pressure piping systems are usually designed with weld joints spaced a minimum of one pipe diameter apart to facilitate radiographic examination of the joints. Steam and wet-gas systems are designed to maintain the pipe runs at some minimum pitch to ensure adequate drainage of condensate or other liquids that may separate from the gas stream. Pipelines that are subject to frequent plugging should be designed with adequate clearance, and mechanically joined, to allow for ready disassembly and maintenance.

Loading and Service Conditions

Loading conditions, or *loads,* are forces, moments, pressure changes, temperature changes, thermal gradients, or any other parameters that affect the state of stress of the piping system. Typical examples of loading conditions include internal pressure, piping system deadweight, steady-state or transient temperatures, wind loads, or snow and ice loads. Loads may be external to the piping system, such as environmental temperature changes or wind loads; or they may be internal to the system, such as internal fluid pressure or temperature changes.

Service conditions are combinations of loads or load sets that occur simultaneously, therefore the piping system must be designed to withstand their combined effects. Occasionally, the service conditions will be specified by the piping design code. Examples are found in the American Society of Mechanical Engineers' (ASME) Boiler and Pressure Vessel Code, Section III, *Nuclear Power Plants Components,* Paragraph NCA-2142, where service conditions are defined directly, and the ASME Code for Pressure Piping, ASME B31.1, *Power Piping,* Paragraph 104.8, where service conditions are specified under the topic of analysis of piping components due to the effects of sustained and occasional loads.

Where service conditions are not specified by a particular code, the designer should review the various loading conditions that the piping system is exposed to and formulate the combinations that must be considered in design. Reference to the most commonly used piping design codes listed in the section ''Use of Codes and Standards in Piping System Design'' will provide the designer with guidance in setting appropriate design stress limits.

Environmental Factors

When used within the context of this chapter, the term *environmental factors* refers to operating conditions that result in progressive physical or chemically induced deterioration of the piping system which can ultimately lead to a breach of the pressure boundary or a gross structural failure. Failures that are the result of environmental factors are usually slow to progress and frequently involve localized areas of the piping system. The most common examples of environmental factors include *corrosion, erosion,* and *physical damage.* While corrosion and erosion mechanisms can act independently, a combined reaction known as *erosion/corrosion,* or *flow-assisted corrosion,* frequently occurs in wet-steam and water piping systems constructed of plain-carbon steels.

Materials-Related Considerations

Materials-related considerations are the specific chemical, metallurgical, and physical properties of a piping system's material constituents that can ultimately determine its suitability for a particular service. Proper materials selection can be a crucial design consideration that will determine the adequacy of performance of a piping system where extremes of temperature, chemical attack, or erosion are significant factors in its operation.

Pressure Integrity

Pressure integrity is the maintenance of a leak-tight condition in piping systems' pressure-containing boundaries coincident with the control of the level of stress or strain within predefined criteria limits. Pressure integrity is not synonymous with leakage integrity; the latter is only an assurance of a leak-tight condition without regard for the state of stress or structural stability of the pressure boundary. Maintenance of the pressure integrity of a piping system, within predefined criteria limits, is a major objective of the design process.

USE OF CODES AND STANDARDS IN PIPING SYSTEM DESIGN

In practice, the assurance that the design and construction of a piping system will meet prescribed pressure-integrity requirements is achieved through the use of published codes and standards. Numerous codes and standards have been formulated and published by major interest groups of the piping and pressure vessel industry. The most widely used codes and standards for piping system design are published by the American Society of Mechanical Engineers. The *American National Standards Institute* (*ANSI*) accredits many of these codes and standards.

Differentiation between Codes and Standards

Codes and standards both provide criteria through which pressure integrity can be ensured and simplified design rules to ensure adherence to the criteria. Many designers and engineers think the terms *code* and *standard* are synonymous, or at least somewhat interchangeable, but this understanding is incorrect.

Codes. Piping *codes* provide specific design criteria such as permissible materials of construction, allowable working stresses, and load sets that must be considered in design. In addition, rules are provided to determine the minimum wall thickness and structural behavior due to the effects of internal pressure, deadweight, seismic loads, live loads, thermal expansion, and other imposed internal or external loads. Piping codes provide design rules for nonstandard components and for the reinforcement of openings in the pipe wall. They do not provide design rules for standard in-line components such as valves, flanges, and standard fittings; rather, they define the design requirements for these classes of components by reference to industry standards.

The use of specific codes for the design and construction of piping systems is frequently mandated by statute or regulations imposed by regulatory and enforcement agencies.

Typically codes are structured around technology or industry user lines. For example, ASME B31.1, *Power Piping,* covers piping systems in power plants, district heating plants, district distribution piping systems, and general industrial piping systems while ASME B31.3, *Process Piping,* is structured around the chemical, petroleum, and petrochemical industries. Any one of the above-named industrial facilities might have a pipeline with similar service requirements such as a high-pressure steam main, a boiler feedwater line, or a cooling water line. However, the requirements of the specific code, as influenced by the needs and experience of the user industry, will dictate the pipeline's design and construction requirements.

Many piping design and construction codes are listed in the section ''Reference Codes and Standards.'' The systems and subsystems covered by these codes are defined in their scope sections. The scope sections of all potentially applicable codes should be reviewed early in the design phase of a piping project to determine which code, or codes, should be applied to the piping design and construction.

In some cases, multiple codes may be required for the design and construction of the same piping system, depending upon its location. For example, a steam main serving a petrochemical plant from a major utility's district heating system would be designed and constructed to ASME B31.1, up to the petrochemical plant property line. The balance of the piping on the petrochemical plant's property would be designed to ASME B31.3. In the case of a natural gas main serving a utility powerhouse, the outdoor piping is designed and constructed to ASME B31.8 up to and including the meter set, and the in-plant piping is designed and constructed to ASME B31.1. For more details, refer to Chap. A4.

Sometimes, different piping systems within the same building or facility will be designed and constructed to different codes. For example, most of the piping systems in a utility power plant are designed and constructed to ASME B31.l. However, the building heating and air conditioning piping systems are designed and constructed to ASME B31.9, *Building Services Piping.*

Standards. *Standards* provide specific design criteria and rules for individual components or classes of components such as valves, flanges, and fittings. There are two general types of standards: dimensional and pressure integrity.

Dimensional standards provide configuration control parameters for components. The main purpose of dimensional standards is to ensure that similar components manufactured by different suppliers will be physically interchangeable. Conformity to a particular dimensional standard during the manufacture of a product does not imply that all such similarly configured products will provide equal performance. For example, two different styles of NPS 10 (DN 250) Class 150 flanged-end gate valves could be manufactured, in part, to ASME B16.10, *Face-to-Face and End-to-End Dimensions of Valves.* The valves would be physically interchangeable between mating flanges in a particular piping system. However, because of completely different seat and disk design, one valve might be capable of meeting far more stringent seat leakage criteria than the other.

Pressure-integrity standards provide uniform minimum-performance criteria. Components designed and manufactured to the same standards will function in an equivalent manner. For example, all NPS 10 (DN 250) Class 150 ASTM A105 flanges, which are constructed in accordance with ASME B16.5, *Pipe Flanges and Flanged Fittings,* have a pressure-temperature rating of 230 psig (1590 kPa gage) at 300°F (149°C).

Statute or regulation does not normally mandate standards; rather they are usually invoked by a construction code or purchaser's specification.

The ASME Pressure Classification System

The ASME pressure classification system meets the needs of industry by providing quantitative performance standards for a wide range of piping components, based upon a manageable number of operational variables. This system defines predetermined pressure-temperature ratings that components are designed to meet.

A number of different ASME standards for piping components provide pressure-temperature ratings. The standards in current use in the piping industry are listed in the section ''Reference Codes and Standards.'' In this section the pressure classification system in ASME B16.5, *Pipe Flanges and Flanged Fittings,*[1] will be used for illustration. However, the concepts covered are generally applicable to all the ASME pressure-integrity standards.

Flanges manufactured in accordance with ASME B16.5 are made from materials categorized into 34 material or material alloy groups. There are 8 carbon and low-alloy steel material groups, 10 high-alloy steel material groups, and 16 nonferrous metal groups. Within each of the 34 material groups is a subgroup listing of ASTM materials specifications for forgings, castings, and plates. In addition, acceptable bolting materials and bolting dimensional recommendations are specified. Partial listings of the various material groups, subgroups, and bolting materials are shown in Tables B2.1, B2.2a, and B2.2b. For the complete list, see ASME B16.5.

For any single material group, all flanges made from any material in the group, which carry the same ASME flange pressure class, have the same pressure-temperature rating.

ASME B16.5 provides seven pressure classes for flanges. They are Classes 150, 300, 400, 600, 900, 1500, and 2500. The pressure-temperature ratings for flanges representing all material groups are organized within 34 tables, one for each material group. Table B2.3 is adapted from ASME Standard B16.5 and is typical of the 34 flange rating tables. It provides the pressure-temperature ratings for flanges in material group 1.1. The table is organized with the pressure classes listed across the top and the maximum working temperatures along the left-hand border. The body of the table provides the pressure ratings for flanges from each pressure class, at the given temperature.

In practice, the use of ASME B16.5 to determine a flange rating is quite simple. The procedure is outlined below:

1. Determine the maximum operating pressure and temperature for the required flange.
2. Select a flange material and therefore a material group from one of the 34 listed material groups. Be aware that some of the qualifying notes concerning maximum operating temperatures for various materials may influence the final material selection.
3. Enter the appropriate material group table at the increment of temperature listed which is higher than the desired maximum operating temperature. Start with the Class 150 column and proceed to the right until a pressure rating for the desired temperature is found which equals or exceeds the required operating pressure. The column in which this condition is satisfied dictates the required pressure class and specifies the actual pressure-temperature rating of the flange.

Example B2.1. Assume that an ASTM A105 carbon-steel flange is required to satisfy a pressure rating of 1060 psig (7310 kPa gage) at 650°F (343°C). ASTM A105 is a material group 1.1 material. Entering Table B2.3 at a temperature of 650°F

TABLE B2.1 A Partial Listing of Materials Used for ASME B16.5 Flange Construction

Material group	Nominal designation	Applicable ASTM specifications		
		Forgings	Castings	Plates
1.1	C-Si	A 105	A 216 Gr. WCB	A 515 Gr. 70
	C-Mn-Si	A 350 Gr. LF2		A 516 Gr. 70
				A 537 Cl. 1
1.2	C-Mn-Si		A 216 Gr. WCC	
	2½Ni		A 352 Gr. LCC	
	3½Ni		A 352 Gr. LC2	A 203 Gr. B
		A 350 Gr. LF3	A 352 Gr. LC3	A 203 Gr. E
1.3	C-Si		A 352 Gr. LCB	A 515 Gr. 65
	C-Mn-Si			A 516 Gr. 65
	2½Ni			A 203 Gr. A
	3½Ni			A 203 Gr. D
1.4	C-Si			A 515 Gr. 60
	C-Mn-Si	A 350 Gr. LF1 Cl. 1		A 516 Gr. 60
1.5	C-½Mo	A 182 Gr. F1	A 217 Gr. WC1	A 204 Gr. A
			A 352 Gr. LC1	A 204 Gr. B
1.7	C-½Mo			A 204 Gr. C
	½Cr-½Mo	A 182 Gr. F2		
	Ni-½Cr-½Mo		A 217 Gr. WC4	
	¾Ni-¾Cr-1Mo		A 217 Gr. WC5	
1.9	1Cr-½Mo	A 182 Gr. F12 Cl. 2		
	1¼Cr-½Mo		A 217 Gr. WC6	
	1¼Cr-½Mo-Si	A 182 Gr. F11 Cl. 2		A 387 Gr. 11 Cl. 2
1.10	2¼Cr-1Mo	A 182 Gr. F22 Cl. 3	A 217 Gr. WC9	A 387 Gr. 22 Cl. 2
1.13	5Cr-½Mo	A 182 Gr. F5		
		A 182 Gr. F5a	A 217 Gr. C5	
1.14	9Cr-1Mo	A 182 Gr. F91	A 217 Gr. C12	
2.1	18Cr-8Ni	A 182 Gr. F304	A 351 Gr. CF3	A 240 Gr. 304
		A 182 Gr. F304H	A 351 Gr. CF8	A 240 Gr. 304H
2.2	16Cr-12Ni-2Mo	A 182 Gr. F316	A 351 Gr. CF3M	A 240 Gr. 316
		A 182 Gr. F316H	A 351 Gr. CF8M	A 240 Gr. 316H
	18Cr-13Ni-3Mo			A 240 Gr. 317
	19Cr-10Ni-3Mo		A 351 Gr. CG8M	
2.3	18Cr-8Ni	A 182 Gr. F304L		A 240 Gr. 304L
	16Cr-12Ni-2Mo	A 182 Gr. F316L		A 240 Gr. 316L
2.4	18Cr-10Ni-Ti	A 182 Gr. F321		A 240 Gr. 321
		A 182 Gr. F321H		A 240 Gr. 321H

Source: Adapted from ASME B16.5, *Pipe Flanges and Flanged Fittings,* American Society of Mechanical Engineers, New York, 1996, Table 1A, p. 10.

TABLE B2.2a Bolting Materials Used with ASME B16.5 Flanges

Bolting materials*											
High strength*			Intermediate strength*			Low strength*			Nickel and special alloy*		
Spec. no.	Grade	Notes*	Spec. no.	Grade	Notes*	Spec. no.	Grade	Notes*	Spec. no.	Grade	Notes*
A 193	B7	. . .	A 193	B5	. . .	A 193	B8 Cl. 1	(6)	B 164	. . .	(7)(8)(9)
A 193	B16	. . .	A 193	B6	. . .	A 193	B8C Cl. 1	(6)			
			A 193	B6X	. . .	A 193	B8M Cl. 1	(6)	B 166	. . .	(7)(8)(9)
A 320	L7	(10)	A 193	B7M	. . .	A 193	B8T Cl. 1	(6)			
A 320	L7A	(10)	A 193	B8 Cl. 2	(11)	A 193	B8A	(6)	B 335	N10665	(7)
A 320	L7B	(10)	A 193	B8C Cl. 2	(11)	A 193	B8CA	(6)			
A 320	L7C	(10)	A 193	B8M Cl. 2	(11)	A 193	B8MA	(6)	B 408	. . .	(7)(8)(9)
A 320	L43	(10)	A 193	B8T Cl. 2	(11)	A 193	B8TA	(6)			
									B 473	. . .	(7)
A 354	BC	. . .	A 320	B8 Cl. 2	(11)	A 307	B	(12)			
A 354	BD	. . .	A 320	B8C Cl. 2	(11)				B 574	N10276	(7)
			A 320	B8F Cl. 2	(11)	A 320	B8 Cl. 1	(6)			
A 540	B21	. . .	A 320	B8M Cl. 2	(11)	A 320	B8C Cl. 1	(6)			
A 540	B22	. . .	A 320	B8T Cl. 2	(11)	A 320	B8M Cl. 1	(6)			
A 540	B23	. . .				A 320	B8T Cl. 1	(6)			
A 540	B24		A 449	. . .	(13)						
			A 453	651	(14)						
			A 453	660	(14)						

* For Notes, refer to ASME B16.5, Table 1B.

Source: Adapted from ASME B16.5, *Pipe Flanges and Flanged Fittings,* American Society of Mechanical Engineers, New York, 1996, Table 1B, p. 13.

TABLE B2.2b Bolting Dimensional Standards Recommendations for Bolts Used with ASME B16.5 Flanges

Product	Carbon steel	Alloy steel
Stud bolts	ASME B18.2.1	ASME B18.2.1
Bolts smaller than ¾ in	ASME B18.2.1, square or heavy hex head	ASME B18.2.1, heavy hex head
Bolts equal to or larger than ¾ in	ASME B18.2.1, square or hex head	ASME B18.2.1, heavy hex head
Nuts smaller than ¾ in	ASME B18.2.2, heavy hex	ASME B18.2.2, heavy hex
Nuts equal to or larger than ¾ in	ASME B18.2.2, hex or heavy hex	ASME B18.2.2, heavy hex
Male threads	ASME B1.1, Cl. 2A course series	ASME B1.1, Cl. 2A course series up through 1 in; eight thread series for larger bolts
Female threads	ASME B1.1, Cl. 2B course series	ASME B1.1, Cl. 2B course series up through 1 in; eight thread series for larger bolts

Source: Adapted from ASME B16.5, *Pipe Flanges and Flanged Fittings,* American Society of Mechanical Engineers, New York, 1996, Table 1C, p. 14.

TABLE B2.3 Pressure-Temperature Ratings for ASME B16.5 Flanges Made from Material Group 1.1 Materials

	Working pressure by classes, psig†						
Class temps., °F	150	300	400	600	900	1500	2500
−20 to 100	285	740	990	1480	2220	3705	6170
200	260	675	900	1350	2025	3375	5625
300	230	655	875	1315	1970	3280	5470
400	200	635	845	1270	1900	3170	5280
500	170	600	800	1200	1795	2995	4990
600	140	550	730	1095	1640	2735	4560
650	125	535	715	1075	1610	2685	4475
700*	110	535	710	1065	1600	2665	4440
750*	95	505	670	1010	1510	2520	4200
800*	80	410	550	825	1235	2060	3430
850*	65	270	355	535	805	1340	2230
900*	50	170	230	345	515	860	1430
950*	35	105	140	205	310	515	860
1000*	20	50	70	105	155	260	430

* For notes concerning the use of carbon-steel materials covered by this table at temperatures over 700°F (371°C), see ASME B16.5, Table 2-1.1.

† To convert pressures to kPa gage, multiply tabular value by 6.9.

Source: Adapted from ASME B16.5, *Pipe Flanges and Flanged Fittings,* American Society of Mechanical Engineers, New York, 1996, Table 2-1.1, p. 15.

(343°C), a Class 600 flange is found to have a rating of 1075 psig (7420 kPa gage) at 650°F (343°C). Therefore, a Class 600 ASTM A105 flange is suitable for the stated conditions.

When using the tables, linear interpolation between listed temperatures and pressures may be employed to determine intermediate pressure ratings.

Reference Codes and Standards

The following listing identifies the codes and standards used for most design work done for modern power and industrial piping systems. It has been prepared as a ready reference.

The ASME Boiler and Pressure Vessel Code. This Code covers a wide variety of pressure-integrity-related design and construction applications. Certain sections of the Code provide rules for the design of piping systems:

Section I: *Rules for Construction of Power Boilers*

Section III: *Rules for Construction of Nuclear Plant Components*

Section IV: *Rules for Construction of Heating Boilers*

Section VIII: *Rules for Construction of Pressure Vessels*

The ASME Pressure Piping Codes. These codes are commonly used for the design of commercial power and industrial piping systems:

B31.1, *Power Piping*

B31.2, *Fuel Gas Piping*

B31.3, *Process Piping*

B31.4, *Liquid Transportation Systems for Hydrocarbons, Liquid Petroleum Gas, Anhydrous Ammonia and Alcohols*

B31.5, *Refrigeration Piping*

B31.8, *Gas Transmission and Distribution Piping Systems*

B31.9, *Building Services Piping*

B31.11, *Slurry Transportation Piping Systems*

B31G, *Manual for Determining the Remaining Strength of Corroded Pipelines**
*ASME Guide for Transmission and Distribution Piping Systems**

The ASME Pressure-Integrity Standards. The standards listed below provide design and manufacturing criteria for many commonly used piping components:

B16.1, *Cast Iron Pipe Flanges and Flanged Fittings*

B16.3, *Malleable Iron Threaded Fittings*

B16.4, *Gray Iron Threaded Fittings*

B16.5, *Pipe Flanges and Flanged Fittings (NPS ½ Through NPS 24)*

B16.9, *Factory Made Wrought Steel Buttwelding Fittings*

B16.11, *Forged Fittings, Socket-Welding and Threaded*

B16.15, *Cast Bronze Threaded Fittings (Class 125 and 250)*

B16.18, *Cast Copper Alloy Solder Joint Pressure Fittings*

B16.22, *Wrought Copper and Copper Alloy Solder Joint Pressure Fittings*

B16.24, *Cast Copper Alloy Pipe Flanges and Flanged Fittings (Class 150, 300, 400, 600, 900, 1500, and 2500)*

B16.26, *Cast Copper Alloy Fittings for Flared Copper Tubes*

B16.28, *Wrought Steel Buttwelding Short Radius Elbows and Returns*

B16.33, *Manually Operated Metallic Gas Valves for Use in Gas Piping Systems up to 125 psig (Sizes ½ Through 2)*

B16.34, *Valves—Flanged, Threaded and Welding End*

B16.36, *Orifice Flanges*

B16.38, *Large Metallic Valves for Gas Distribution (Manually Operated, NPS 2½ to 12, 125 psig Maximum)*

B16.39, *Malleable Iron Threaded Pipe Unions, Classes 150, 250, and 300*

B16.42, *Ductile Iron Pipe Flanges and Flanged Fittings, Classes 150 and 300*

B16.47, *Large Diameter Steel Flanges (NPS 26 Through NPS 60)*

---

* Not an ASME code but listed here for the reader's convenience.

The ASME Dimensional Standards. Listed below are the most commonly used piping-related dimensional standards:

B1.20.1, *Pipe Threads, General Purpose (Inch)*

B1.20.3, *Dryseal Pipe Threads (Inch)*

B16.10, *Face-to-Face and End-to-End Dimensions of Valves*

B16.20, *Metallic Gaskets for Pipe Flanges—Ring Joint, Spiral Wound, and Jacketed*

B16.21, *Non-Metallic Flat Gaskets for Pipe Flanges*

B16.25, *Buttwelding Ends*

B36.10M, *Welded and Seamless Wrought Steel Pipe*

B36.19M, *Stainless Steel Pipe*

PIPING JOINTS

Joint design and selection can have a major impact on the initial installed cost, the long-range operating and maintenance cost, and the performance of the piping system. Factors that must be considered in the joint selection phase of the project design include material cost, installation labor cost, degree of leakage integrity required, periodic maintenance requirements, and specific performance requirements. In addition, since codes do impose some limitations on joint applications, joint selection must meet the applicable code requirements. In the paragraphs that follow, the above-mentioned considerations will be briefly discussed for a number of common pipe joint configurations. Figures illustrating many common piping system joints are shown in Chap. A2.

Butt-welded Joints

Butt-welding is the most common method of joining piping used in large commercial, institutional, and industrial piping systems. Material costs are low, but labor costs are moderate to high due to the need for specialized welders and fitters. Long-term leakage integrity is extremely good, as is structural and mechanical strength. The interior surface of a butt-welded piping system is smooth and continuous which results in low pressure drop. The system can be assembled with internal weld backing rings to reduce fit-up and welding costs, but backing rings create internal crevices, which can trap corrosion products. In the case of nuclear piping systems, these crevices can cause a concentration of radioactive solids at the joints, which can lead to operating and maintenance problems. Backing rings can also lead to stress concentration effects, which may promote fatigue cracks under vibratory or other cyclic loading conditions. Butt-welded joints made up without backing rings are more expensive to construct, but the absence of interior crevices will effectively minimize ‘‘crud’’ buildup and will also enhance the piping system’s resistance to fatigue failures. Most butt-welded piping installations are limited to NPS 2½ (DN 65) or larger. There is no practical upper size limit in butt-welded construction. Butt-welding fittings and pipe system accessories are available down to NPS ½ (DN 15). However, economic penalties associated with pipe end preparation and fit-up, and special weld procedure qualifications normally preclude the use of butt-welded construction in sizes NPS 2 (DN 50) and under, except for those special cases where interior surface smoothness and the elimination of internal crevices are of paramount importance. Smooth external surfaces give butt-welded construction high aesthetic appeal.

Socket-welded Joints

Socket-welded construction is a good choice wherever the benefits of high leakage integrity and great structural strength are important design considerations. Construction costs are somewhat lower than with butt-welded joints due to the lack of exacting fit-up requirements and elimination of special machining for butt weld end preparation. The internal crevices left in socket-welded systems make them less suitable for corrosive or radioactive applications where solids buildup at the joints may cause operating or maintenance problems. Fatigue resistance is lower than that in butt-welded construction due to the use of fillet welds and abrupt fitting geometry, but it is still better than that of most mechanical joining methods. Aesthetic appeal is good.

Brazed and Soldered Joints

Brazing and soldering are most often used to join copper and copper-alloy piping systems, although brazing of steel and aluminum pipe and tubing is possible. Brazing and soldering both involve the addition of molten filler metal to a close-fitting annular joint. The molten metal is drawn into the joint by capillary action and solidifies to fuse the parts together. The parent metal does not melt in brazed or soldered construction. The advantages of these joining methods are high leakage integrity and installation productivity. Brazed and soldered joints can be made up with a minimum of internal deposits. Pipe and tubing used for brazed and soldered construction can be purchased with the interior surfaces cleaned and the ends capped, making this joining method popular for medical gases and high-purity pneumatic control installations.

Soldered joints are normally limited to near-ambient temperature systems and domestic water supply. Brazed joints can be used at moderately elevated temperatures. Most brazed and soldered installations are constructed using light-wall tubing; consequently the mechanical strength of these systems is low.

Threaded or Screwed Joints

Threaded or screwed piping is commonly used in low-cost, noncritical applications such as domestic water, fire protection, and industrial cooling water systems. Installation productivity is moderately high, and specialized installation skill requirements are not extensive. Leakage integrity is good for low-pressure, low-temperature installations where vibration is not encountered. Rapid temperature changes may lead to leaks due to differential thermal expansion between the pipe and fittings. Vibration can result in fatigue failures of screwed pipe joints due to the high stress intensification effects caused by the sharp notches at the base of the threads. Screwed fittings are normally made of cast gray or malleable iron, cast brass or bronze, or forged alloy and carbon steel. Screwed construction is commonly used with galvanized pipe and fittings for domestic water and drainage applications. While certain types of screwed fittings are available in up to NPS 12 (DN 300), economic considerations normally limit industrial applications to NPS 3 (DN 80). Screwed piping systems are useful where disassembly and reassembly are necessary to accommodate maintenance needs or process changes. Threaded or screwed joints must be used within the limitations imposed by the rules and requirements of the applicable code.

Grooved Joints

The main advantages of the grooved joints are their ease of assembly, which results in low labor cost, and generally good leakage integrity. They allow a moderate amount of axial movement due to thermal expansion, and they can accommodate some axial misalignment. The grooved construction prevents the joint from separating under pressure. Among their disadvantages are the use of an elastomer seal, which limits their high-temperature service, and their lack of resistance to torsional loading. While typical applications involve machining the groove in standard wall pipe, light wall pipe with rolled-in grooves may also be used. Grooved joints are used extensively for fire protection, ambient temperature service water, and low-pressure drainage applications such as floor and equipment drain systems and roof drainage conductors. They are a good choice where the piping system must be disassembled and reassembled frequently for maintenance or process changes.

Flanged Joints

Flanged connections are used extensively in modern piping systems due to their ease of assembly and disassembly; however, they are costly. Contributing to the high cost are the material costs of the flanges themselves and the labor costs for attaching the flanges to the pipe and then bolting the flanges to each other. Flanges are normally attached to the pipe by threading or welding, although in some special cases a flange-type joint known as a *lap joint* may be made by forging and machining the pipe end. Flanged joints are prone to leakage in services that experience rapid temperature fluctuations. These fluctuations cause high-temperature differentials between the flange body and bolting, which eventually causes the bolt stress to relax, allowing the joint to open up. Leakage is also a concern in high-temperature installations where bolt stress relaxation due to creep is experienced. Periodic retorquing of the bolted connections to reestablish the required seating pressure on the gasket face can minimize these problems. Creep-damaged bolts in high-temperature installations must be periodically replaced to reestablish the required gasket seating pressure. Flanged joints are commonly used to join dissimilar materials, e.g., steel pipe to cast-iron valves and in systems that require frequent maintenance disassembly and reassembly. Flanged construction is also used extensively in lined piping systems.

Compression Joints

Compression sleeve-type joints are used to join plain end pipe without special end preparations. These joints require very little installation labor and as such result in an economical overall installation. Advantages include the ability to absorb a limited amount of thermal expansion and angular misalignment and the ability to join dissimilar piping materials, even if their outside diameters are slightly different.

Disadvantages include the use of rubber or other elastomer seals, which limits their high-temperature application, and the need for a separate external thrust-resisting system at all turns and deadends to keep the line from separating under pressure. Compression joints are frequently used for temporary piping systems or systems that must be dismantled frequently for maintenance. When equipped with the proper gaskets and seals, they may be used for piping systems containing air, other gases, water, and oil; in both aboveground and underground service. Small-diameter compression fittings with all-metal sleeves may be used at elevated temperatures and pressures, when permitted by the rules and requirements of the applicable code. They are common in instrument and control tubing installations and other applications where high seal integrity and easy assembly and disassembly are desirable attributes.

LOADING CONDITIONS

In an earlier section, ‘‘Definition of the Term *Design Bases,*’’ loading conditions were identified as one of the five principal elements in the definition of the term *design bases*. This section will identify some of the more common loading conditions and discuss the way in which they are considered in design.

Loading conditions may be classified as either sustained or occasional. *Sustained loads* act on the piping system during all or at least the great majority of its operating time. These loads are time-invariant. Examples of sustained loads include the deadweight of the pipe plus its contents or the pressure load, including the effects of static head. *Occasional loads* are transient and act during relatively small percentages of the system's total operation time. Examples of occasional loads include surges due to pump start-up and shutdown or pressure depressions and/or peaks due to sudden valve actuations.

Design Pressure

The *design pressure* is the maximum sustained pressure that a piping system must contain without exceeding its code-defined allowable stress limits. In single-compartment systems the design pressure is the maximum differential pressure between the interior and exterior portions of the system. In multicompartment systems the design pressure is the maximum differential pressure between any two adjacent compartments. The design pressure is the pressure that results in the heaviest piping wall thickness and/or the highest component pressure rating. The design pressure is not to be exceeded during any normal steady-state operating mode of the piping system.

In formulating the design pressure, the designer must consider all potential pressure sources. Among the more common sources to be considered are

- The hydrostatic head due to differences in elevation between the high and low points in the system
- Back-pressure effects
- Friction losses
- The shutoff head of in-line pumps
- Frequently occurring pressure surges
- Variations in control system performance

Variations in System Pressure. As previously indicated, the system design pressure is the steady-state or sustained maximum pressure. Sustained conditions are those that remain constant over the majority of the total operating time. It is reasonable to expect that short-duration transient system pressure excursions in excess of the steady-state design pressure will occur during normal system operation. These transients, or *occasional pressure* excursions, may be tolerated without increasing the basic system design pressure, provided that the pressure increase does not exceed predefined limits and provided that the amount of time that the transients act does not exceed a specified percentage of the total system operating time.

A number of, but not all, piping design codes provide rules to account for overpressure transients. Among the codes that provide design criteria or guidance are

- The ASME Boiler and Pressure Vessel Code, Section III, *Rules for Construction of Nuclear Power Plant Components*
- Various sections of the ASME Code for Pressure Piping, including

  B31.1, *Power Piping*

  B31.3, *Process Piping*

  B31.4, *Liquid Transportation Systems for Hydrocarbons, Liquid Petroleum Gas, Anhydrous Ammonia and Alcohols*

  B31.11, *Slurry Transportation Piping Systems*

The methods used to qualify overpressure conditions for service vary from code to code. The ASME Code, Section III, uses a rather complex approach in which the range of acceptable overpressure transients is related to the nature of the loading combinations being investigated. The loading combinations are known as *service conditions,* and depending upon their severity and frequency of occurrence, pressure transients of up to 2 times the design pressure may be tolerated. The interested reader is referred to Subsubarticles NB, NC, ND-3600 of Section III for the details. In contrast to the complex methods adopted by Section III, ASME B31.4 and ASME B31.11 allow pressure transients of up to 10 percent over the system design pressure without restricting the amount of time that the transients may act.

ASME B31.1 and ASME B31.3 provide rules that are about midway in relative complexity from the extremes indicated above. As an example, the acceptance criteria for occasional loads specified in Paragraph 102.2.4 of the ASME B31.1 Code for Power Piping are reproduced below:

> **Ratings: Allowance for Variation from Normal Operation**. The maximum internal pressure and temperature allowed shall include considerations for occasional loads and transients of pressure and temperature.
>
> It is recognized that variations in pressure and temperature inevitably occur, and therefore the piping system except as limited by component standards referred to in Para. 102.2.1 or by manufacturers of components referred to in Para. 102.2.2, shall be considered safe for occasional short operating periods at higher than design pressure or temperature. For such variations, either pressure or temperature, or both, may exceed the design values if the computed circumferential pressure stress does not exceed the maximum allowable stress from Appendix A for the coincident temperature by:
>
> **A.** 15% if the event duration occurs less than 10% of any 24 hour operating period;
>
> or
>
> **B.** 20% if the event duration occurs less than 1% of any 24 hour operating period.[2]

Referring to Paragraph 104.1.2 of the ASME B31.1 code, one finds Eq. (4) for the maximum allowable pressure in a straight pipe[3]

$$P = \frac{2SE(t_m - A)}{D_o - 2y(t_m - A)} \tag{B2.1}$$

It can be seen from Eq. (B2.1) that the maximum allowable pressure P varies directly with the allowable stress S. Therefore, the net effect of Paragraph 102.2.4 is to allow short-term pressure excursions of from 15 to 20 percent in excess of the design pressure, as long as the respective time criteria are met.

As indicated above, not all piping codes provide rules for accepting transient pressure excursions in excess of the design pressure. Sections of the ASME Code for Pressure Piping which have no such rules include

- B31.5, *Refrigeration Piping*
- B31.8, *Gas Transmission and Distribution Piping Systems*
- B31.9, *Building Services Piping*

When designing to a code which has no rules for acceptance of overpressure transients, the designer must increase the design pressure to envelop the transient condition. If, however, no specific design code is being used as a basis for design of a project, the designer may make a reasonable engineering judgment concerning the handling of transient overpressure events. In the absence of any other governing criteria, the following may be considered:

> For transient pressure conditions that exceed the design pressure by 10 percent or less and act for no more than 10 percent of the total operating time, the transient may be neglected and the design pressure need not be increased. For transients whose magnitude or duration is greater than 10 percent of the design pressure or operating time, the design pressure should be increased to envelop the transient.

Determination of the Piping Wall Thickness. The determination of the piping wall thickness is one of the most important calculations of the piping system design process. In arriving at the final specification of the piping wall thickness, the designer must consider a number of important factors:

- Pressure integrity
- Allowances for mechanical strength, corrosion, erosion, wear, threading, grooving, or other joining processes
- Manufacturing variations (tolerance) in the wall thickness of commercial pipe
- Wall thickness reduction due to butt-welding of end preparation (counterboring)

While a number of different pipe wall thickness design formulas have been proposed over the years,[4] the ASME piping codes have adopted one or the other of the following formulas for pressure-integrity design:

$$t = \frac{PD}{2(SE + Py)} \qquad \text{(Ref. 5)} \tag{B2.2}$$

or

$$t = \frac{PD}{2SE} \qquad \text{(Ref. 6)} \tag{B2.3}$$

where t = design minimum wall thickness required to ensure pressure integrity, in
P = design pressure, psig
D = outside diameter of pipe, in
S = allowable stress, psi
E = weld joint efficiency factor (some codes also specify a casting quality factor F for cast piping materials)
y = dimensionless factor which varies with temperature

For the precise definition of the method by which either equation is used by the codes, the particular code of interest should be consulted.

Most construction codes require the provision of additional wall thickness, over and above that intended to ensure pressure integrity. This additional material allowance is provided in accordance with Eq. (B2.4):

$$t_m = t + c \qquad \text{(Ref. 7)} \tag{B2.4}$$

where t_m = minimum wall thickness required to satisfy the design rules of the code, in
t = wall thickness required to provide pressure integrity [see Eqs. (B2.2) and (B2.3)]
c = additional material allowance,† in

The additional material allowance c is made up of a number of individual allowances that are provided to address different loads or conditions the piping system will see during fabrication, installation, and operation. Each allowance is figured separately, and their sum is added to the pressure-integrity wall thickness to arrive at the final design minimum wall thickness. The major constituents of c include

- Wall thickness added to account for progressive deterioration or thinning of the pipe wall in service due to the effects of corrosion, erosion, and wear.
- Wall thickness added to account for material removed to facilitate joining of the various segments of the piping system. Typical joining methods include threading, grooving, and swagging. If a machining tolerance is required as a part of the joint manufacture, this tolerance must be accounted for in the most conservative manner.
- Wall thickness added to provide mechanical strength. This additional strength might be required to resist external operating loads or loads associated with shipping and handling

The effects of pressure result in pipe wall stresses in both the longitudinal and circumferential (*hoop stress*) directions. Typically, the circumferential stress is twice the longitudinal stress. Piping wall thickness selections made using hoop stress-type formulas, such as (B2.2) and (B2.3), result in excess-material availability in the longitudinal direction. In most cases, this excess material is adequate to resist bending stresses associated with the deadweight of the pipe, its contents, and in-line components such as valves, flanges, and piping specialties. In some cases, such as extremely long spans between pipe hangers and piping which is required to support unusually large concentrated loads, it may be necessary to increase the wall thickness to control bending stresses. Refer to Chap. B4.

---

† In some codes, the term A is used in lieu of c, but the intent is the same.

Once the design minimum wall thickness t_m is determined, the only remaining step is to specify the actual or purchase wall thickness.

Pipe is manufactured to one of two wall thickness dimensioning procedures: minimum wall thickness and nominal wall thickness.

Pipe purchased to a minimum wall thickness specification will be manufactured using special processes to control the wall thickness. These processes may include custommade dies, extra rolling passes, or final boring of the inside diameter. Most minimum wall pipe is custom-manufactured. The use of minimum wall pipe is normally limited to high-pressure, high-temperature applications where the savings in material weight is sufficient to offset the additional manufacturing cost.

Pipe purchased to a nominal wall thickness specification is manufactured in accordance with the dimensional criteria specified in ASME Standards B36.10M and B36.19M. These standards provide predetermined nominal wall thicknesses, or *schedules,* for various standard outside diameters of commercially manufactured pipe.

The tolerance on the wall thickness of pipe varies with the particular manufacturing process employed and with the relevant manufacturing specification. Rolled seamless and seam-welded (without filler metal) pipe has a normal wall thickness tolerance of +0, −12½ percent. Forged and bored pipe has a wall thickness tolerance of +⅛ in (3.2 mm), −0. Piping manufactured from rolled and welded plate has a wall thickness tolerance of −0.01 in (0.25 mm). There is no plus tolerance for this type of pipe. The ASTM (or ASME) specification for the particular piping material should be consulted to determine the wall thickness tolerance. Refer to App. E5.

When piping is to be joined by butt-welding, the pipe ends are frequently counterbored to facilitate fit-up. Counterbore dimensions for standard pipe wall thicknesses are given in ASME B16.25. It is important that the net minimum wall thickness resulting from the counterboring process be compared with the code minimum wall thickness t_m to be sure that an under-thickness condition does not occur at the joints.

Example B2.1 demonstrates how the previously discussed concepts associated with the design pressure may be applied to a typical problem.

Example B2.2—Problem Statement. Two motor-driven boiler feed pumps installed on the ground floor of a powerhouse supply 3000 gal/min (11,360 L/min) of water at 350°F (177°C) to a boiler drum which is 260 ft (79.3 m) above the pump discharge. Each pump discharge is NPS 8 (DN 200) pipe, and the common discharge header running up to the boiler drum is NPS 12 (DN 300) pipe. Each pump discharge pipe has a manual valve that can isolate it from the main header. A relief valve is installed upstream of each pump discharge valve to relieve the excess pressure which the pump will develop if the discharge valve is closed while the pump is operating. The normal working pressure at the boiler drum is 2520 psig (17,390 kPa gage). The set pressure of the drum safety valve is 2600 psig (17,940 kPa gage) (MAWP of the drum) and the shutoff head of the pumps is 8700 ft (2652 m). The piping material is ASTM A106, Grade C with an allowable working stress of 17,500 psi (121 MPa) over the temperature range of −20°F (−29°C) to 650°F (343°C). The corrosion allowance is 0.08 in (2.0 mm), and the design code is ASME B31.1. A simplified system diagram is shown in Fig. B2.1.

Find the required nominal pipe wall thickness for the NPS 12 header (DN 300) (zone 1) and the NPS 8 (DN 200) pump discharge lines upstream of the isolation valve (zone 2). Also check the adequacy of the pipe wall thickness in zone 2, assuming the relief valve on one pump does not operate when the associated discharge valve is closed.

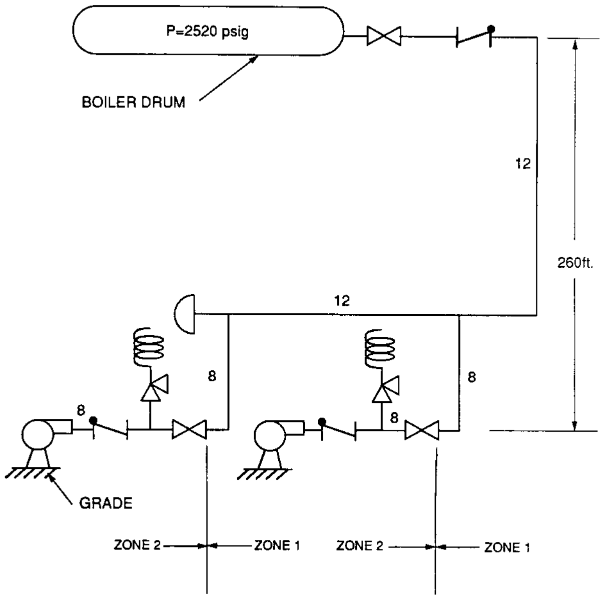

FIGURE B2.1 Simplified powerhouse boiler feed system.

Solution. Note that the piping material used in this example is A106, Grade C. A106, Grade C material has a higher allowable stress than A106, Grade B. The use of Grade C material results in thinner pipe when compared to Grade B. However, A106, Grade B is an acceptable material for this application.

The specific volume of 350°F (177°C) saturated water is 0.01799 $\mathrm{ft^3/lbm}$ (1.123 $\mathrm{cm^3/g}$). Correcting the specific volume for the effects of compression to 2500 psig (17,250 kPa gage) results in a revised specific volume of 0.01778 $\mathrm{ft^3/lbm}$ (1.109 $\mathrm{cm^3/g}$), or a density of 56.24 $\mathrm{lb/ft^3}$ (901 $\mathrm{kg/m^3}$). The static head P_{st} above the pumps due to the elevation of the boiler drum is

$$P_{\mathrm{st}} = 260\,\mathrm{ft} \times 56.24\,\frac{\mathrm{lb}}{\mathrm{ft}^3} \times \frac{1\,\mathrm{ft}^2}{144\,\mathrm{in}^2}$$

$$= 102\,\frac{\mathrm{lb}}{\mathrm{in}^2}\ (704\,\mathrm{kPa\ gage})$$

Paragraph PG 61.1 of ASME Section I, *Power Boilers,* requires the piping in Zones 1 and 2 be designed for a pressure equal to the highest setting of any safety valve plus 3 percent. In this case the safety valve is set at 2600 psig (17,490 kPa gage). Considering the static head of 102 psi (704 kPa gage) and the 3 percent margin above the set pressure of 2600 psig (17,940 kPa gage), the minimum design pressure for piping is

$$2600 + 0.03(2600) + 102 = 2780\,\mathrm{psig}\ (19{,}180\,\mathrm{kPa\ gage})$$

ASME B31.1, Paragraph 122.1.3 (A.1), requires the design pressure of the feedwater piping from the boiler, up to and including the required stop valve and check valve, to exceed the maximum allowable working pressure by either 25 percent or 225 psi (1,553 kPa gage), whichever is less. In compliance with this requirement the design pressure for the piping must be greater than 2520 + 225 + 102 = 2847 psig.

Considering the two code issues discussed above, a design pressure of 2850 psig (19,670 kPa gage) will be used for this piping.

ASME B31.1 uses the approach provided by Eqs. (B2.2) and (B2.4) to yield a combined minimum wall thickness function represented by Eq. (B2.5):

$$t = \frac{PD_o}{2(SE + Py)} \tag{B2.2}$$

$$t_m = t + A \tag{B2.4}$$

$$t_m = \frac{PD_o}{2(SE + Py)} + A \tag{B2.5}$$

The values of the variables are

$$P = 2850\,\text{psig}\ (19{,}670\,\text{kPa gage})$$

$$D_o = 12.75\,\text{in}\ (324\,\text{mm})$$

$$S = 17{,}500\,\text{psi}\ (121\,\text{MPa})$$

$$y = 0.4$$

$$A = 0.08\,\text{in}\ (2.0\,\text{mm})$$

$$E = 1.0$$

Substituting in Eq. (B2.5) yields the following:

$$t_m = \frac{2850(12.75)}{2(17{,}500 + 2850 \times 0.4)} + 0.08$$

$$= 1.055\,\text{in}\ (26.8\,\text{mm})$$

The commercial wall thickness tolerance for seamless rolled pipe is +0, −12½ percent; therefore, to determine the required nominal wall thickness, t_m must be divided by 0.875:

$$t_{\text{nom}} = \frac{1.055}{0.875} = 1.21\,\text{in}\ (30.7\,\text{mm})$$

Referring to ASME B36.10M, the nearest commercial NPS 12 (DN 300) pipe whose wall thickness exceeds 1.21 in is Schedule 160 with a nominal wall thickness of 1.312 in (33.3 mm). Therefore NPS 12 (DN 300), Schedule 160 pipe meeting the requirements of ASTM A106 Grade C is chosen for this application. Refer to App. E2 and E2M for pipe properties.

This calculation does not consider the effects of bending the pipe during fabrication. If bending during fabrication is planned, the required wall thickness may need to be increased depending upon the radius of the bend. Refer to the design code for the appropriate bending allowance.

Similarly, the required wall thickness for the NPS 8 (DN 200) pipe upstream of the isolation valves (zone 2) is calculated. The outside diameter of NPS 8 (DN 200) standard pipe is 8.625 in (219 mm). Substituting in Eq. (B2.5) yields:

$$\begin{aligned} t_m &= \frac{2850(8.625)}{2(17{,}500 + 2850 \times 0.4)} + 0.08 \\ &= 0.739\ \text{in} \end{aligned}$$

$$t_{\text{nom}} = 0.845\ \text{in}\ (21.5\ \text{mm})$$

The required nominal wall thickness is 0.845 in (21.5 mm). By referring to ASME B36.10M, or App. E2 or E2M, NPS 8 (DN 200), XXS pipe with a nominal wall thickness of 0.875 in (22.2 mm) is selected.

The only remaining step is to check the pipe in zone 2 to see if the wall thickness is adequate to withstand the pump's shutoff head. It is reasonable to assume that failure of a relief valve to operate is a very low-probability event. The occasional load criteria of ASME B31.1, Paragraph 102.2.4 will be invoked, and it will be assumed that the pump operation at shutoff head due to a failed relief valve occurs less than 1 percent of the time. Therefore, the allowable stress is 20 percent higher than the basic Code allowable stress of 17,500 psi (121 MPa). The higher allowable stress is denoted as S' where

$$S' = 1.20 \times S$$

$$S' = 1.20 \times 17{,}500 = 21{,}000\ \text{psi}\ (145\ \text{MPa})$$

The maximum pressure rating of the NPS 8 (DN 200), XXS pipe is calculated using Eq. (B2.1):

$$P = \frac{2SE(t_m - A)}{D_o - 2y(t_m - A)} \qquad \text{(B2.1)}$$

For this evaluation, the value of S is set equal to S', and $E = 1.00$ for seamless pipe; t_m is assumed equal to 87½ percent of the nominal wall thickness of the pipe.

$$t_m = 0.875 \times 0.875 = 0.766\ \text{in}\ (19.5\ \text{mm})$$

then

$$\begin{aligned} P &= \frac{2 \times 21{,}000\,(0.766 - 0.08)}{8.625 - 2 \times 0.4\,(0.766 - 0.08)} \\ &= 3568\ \text{psig}\ (24{,}620\ \text{kPa gage}) \end{aligned}$$

The shutoff head of the pump was given as 8700 ft. The density of pressurized water at 350°F was previously determined to be 56.24 lb/ft^3. The pressure equivalent to the shutoff head may be calculated based upon this density.

$$\begin{aligned} P &= 8700\ \text{ft} \times 56.24\frac{\text{lb}}{\text{ft}^3} \times \frac{1\ \text{ft}^2}{144\ \text{in}^2} \\ &= 3398\ \text{psig}\ (23{,}450\ \text{kPa gage}) \end{aligned}$$

Since the 3568 psig (24,620 kPa gage) occasional pressure rating of the NPS 8 (DN 200), XXS pipe exceeds the 3398 psig (23,450 kPa gage) shutoff head of the pump, the piping is adequate for the intended service.

The design procedures presented in the foregoing problem are valid for steel or other code-approved wrought materials. They are not valid for cast-iron or ductile-iron piping and fittings. For piping design procedures, which are suitable for use with cast iron, or ductile-iron pipe, see ASME B31.1, Paragraph 104.1.2(B).

Design Temperature

The *design temperature* is the temperature at which the allowable stresses for all pressure-retaining parts of the piping system are assigned. The design temperature must be equal to or greater than the maximum sustained temperature that the pressure-retaining components will experience during all normal and expected abnormal modes of operation.

The design temperature of the system's pressure-retaining metal parts is normally assumed equal to the maximum free-stream fluid temperature. The effects of any internal or external heat sources such as heat tracing must be considered, as must any temperature excursions occurring as a result of control system error. The design temperature should be set at or above the peak of these temperature excursions.

While the pressure-integrity design is based upon the design temperature, most other thermally related aspects of the design are based upon the normal operating temperature. The *normal operating temperature* is the temperature achieved by the system fluid while the system is operating in full-load, steady-state, nontransient conditions. It is lower than the design temperature. The normal operating temperature is used as the basis for all thermal design analyses that relate to the structural integrity of the piping system, including the thermal flexibility analysis, the spring hanger sizing and setting calculations, and the thermally induced anchor movement calculations. If a system has more than one ''normal'' operating mode (i.e., the system runs at different temperatures or has branches that run at different temperatures for different operating modes), then multiple thermal analysis calculations at all normal operating temperatures may be necessary to fully qualify the design.

Deadweight

The *deadweight* (self-weight) of a piping system consists of the sum of the distributed loads from the weight of the pipe itself, its thermal insulation, and/or other uniformly applied covering materials, plus the sum of the weights of any permanently installed concentrated loads such as valves, strainers, or other in-line appurtenances.

External loads on the piping system such as wind loads, snow and ice loads, and the weight of the fluid contents are considered as live loads. They are distinct from deadweight in that live loads may be variable both in magnitude and/or in the percentage of the total system operating time during which they act. An additional distinction is that the effects of live loads may be removed from the piping system while those of deadweight may not (without dismantling the system, of course).

Both the ASME Boiler and Pressure Vessel Code, Section I, *Power Boilers,* and the ASME B31.1 Code, *Power Piping,* require that the effects of deadweight and other sustained loads be considered in verifying the pressure integrity of components. Subpart PG-22 of ASME Section I, *Power Boilers,* provides the following generalized rule:

> Stresses due to hydrostatic head shall be taken into account in determining the minimum thickness required unless noted otherwise. Additional stresses imposed by effects other than working pressure or static head, which increase the average stress by more than 10% of the allowable working stress, shall also be taken into account. These effects include the weight of the component and its contents, and the method of support.[8]

ASME B31.1, *Power Piping,* specifies more definitive rules to account for the effects of deadweight. Paragraph 104.8 provides closed-form equations to evaluate the effect of the simultaneous application of the internal pressure, deadweight, and other sustained loads on the design of a piping system. Equation 11 is used to calculate the piping system stress and to compare the calculated stress with code acceptance criteria. Details of this analytical approach are discussed in Chap. B4.

Wind Load

The majority of all piping system installations are indoors where the effects of wind loading can be neglected. However, there are sufficient numbers of outdoor piping installations where wind loading can be a significant design factor. *Wind load*, like deadweight, is a uniformly distributed load that acts along the entire length, or that portion of the piping system that is exposed to the wind. The difference is that while deadweight loads are oriented in the downward vertical direction, wind loads are horizontally oriented and may act in any arbitrary direction. Since wind loads are oriented in the horizontal direction, the regular deadweight support system of hangers and anchors may have little or no ability to resist these loads. Consequently, when wind loading is a factor, a separate structural evaluation and wind load support system design is required.

Determination of the magnitude of the wind loadings is based upon empirical procedures developed for the design of buildings and other outdoor structures. Analysis of piping system stresses and support system loads is accomplished by using techniques that are similar to those applied for deadweight design. Details of these procedures are discussed in Chap. B4.

Snow and Ice Loads

Snow and ice loads, like wind loads, need to be considered in the design of piping systems which are installed outdoors, particularly if the installation is made in the northern latitudes. Since snow and ice loads act in the vertical direction, they are treated the same as deadweight loads. In design, they are simply added as distributed loads in the deadweight analysis, as discussed earlier in the section ''Deadweight'' and in Chap. B4.

Snow Loads. ANSI/ASCE 7–95, *Minimum Design Loads for Buildings and Other Structures,*[9] provides recommendations and data for developing design loadings due to snow. The methods used in this standard are generally applicable to sloping or horizontal flat surfaces such as building roofs or grade slabs. While the methods of ANSI/ASCE 7–95 are completely appropriate for extended flat surfaces, they may be too conservative for application to a smooth, round, horizontal pipe which will tend to shed most of the snowfall which may land upon it. The data provided in ANSI/ASCE 7–95 can, however, be used as part of a rational method to estimate the maximum probable snow load on an outdoor piping system, and the following procedure may be adopted for piping.

Table B2.4 provides ground snow loading data for 204 locations where those data are measured. The column marked 2% Annual Probability represents the loading associated with the maximum probable snowfall that is likely to occur in a 50-year period. Based upon the data from Table B2.4, the following relationship for the design snow load for outdoor piping systems may be used:

$$W_s = \frac{1}{2} D_O S_{50} \tag{B2.6}$$

where W_s = design snow load to be added to other distributed loads acting on pipe, lb/ft
D_o = outside diameter of pipe or insulation, ft
S_{50} = 2 percent probability snow loading for nearest appropriate location from Table B2.4, lb/ft^2

This formula assumes the snow remaining on the pipe will take the shape of an equilateral triangle whose base equals the outside diameter of the pipe.

Ice Loads. Ice storms are sporadic in the frequency of their occurrence and in their intensity. Weather records dating back to the turn of the 20th century for a typical midwestern state relate instances of ice storm deposits of ⅛ in (3.2 mm) to 4 in (102 mm) in thickness. *The American Weather Book*[10] cites examples of ice accumulations of up to 8 in (203 mm) in northern Idaho (1961) and 6 in (152 mm) in northwest Texas (1940) and New York State (1942).

The paper "Estimated Glaze Ice and Wind Loads at the Earth's Surface for the Contiguous United States"[11] documents the results of a comprehensive study of ice storm records over the 50-winter period from 1919–1920 through 1968–1969. A statistical evaluation of the data indicates that 50-year maximum probable values for ice deposits from a single storm vary over the range of 2 in (51 mm) to 3 in (76 mm), with the larger accumulations occurring in the upper midwest, far west, and northeast and the smaller accumulations occurring in the lower midwest and southeast. Given the relative infrequency of ice storms, this range probably represents a reasonable value for design. It is suggested that the designer contact local weather or agricultural authorities to determine whether any better region-specific data exist.

Once the appropriate design thickness is determined, the following formula may be used to estimate the unit loadings on an exposed pipeline due to ice accumulation:

$$W/L = 1.36t(D_o + t) \tag{B2.7}$$

where W/L = unit loading on pipe, lb/ft
D_o = outside diameter of pipe or insulation lagging, in
t = assumed iced covering thickness, in

Table B2.5 provides a tabulation of ice loadings based upon Eq. (B2.7) for piping systems up to 30 in (762 mm) in outside diameter and ice thicknesses up to 3 in (76 mm).

TABLE B2.4 Ground Snow Loads at 204 National Weather Service Locations at Which Measurements Are Made

Location	Ground snow load* (lb/ft^2)		
	Years of record	Maximum observed	2% Annual probability
ALABAMA			
Birmingham	40	4	3
Huntsville	33	7	5
Mobile	40	1	1
ARIZONA			
Flagstaff	38	88	48
Tucson	40	3	3
Winslow	39	12	7
ARKANSAS			
Fort Smith	37	6	5
Little Rock	24	6	6
CALIFORNIA			
Bishop	31	6	8
Blue Canyon	26	213	242
Mt. Shasta	32	62	62
Red Bluff	34	3	3
COLORADO			
Alamosa	40	14	14
Colorado Springs	39	16	14
Denver	40	22	18
Grand Junction	40	18	16
Pueblo	33	7	7
CONNECTICUT			
Bridgeport	39	21	24
Hartford	40	23	33
New Haven	17	11	15
DELAWARE			
Wilmington	39	12	16
GEORGIA			
Athens	40	6	5
Atlanta	39	4	3
Augusta	40	8	7
Columbus	39	1	1
Macon	40	8	7
Rome	28	3	3
IDAHO			
Boise	38	8	9
Lewiston	37	6	9
Pocatello	40	12	10
ILLINOIS			
Chicago—O'Hare	32	25	17
Chicago—Midway	26	37	22
Moline	39	21	19
Peoria	39	27	15
Rockford	26	31	19
Springfield	40	20	21
INDIANA			
Evansville	40	12	17
Fort Wayne	40	23	20
Indianapolis	40	19	22
South Bend	39	58	41

TABLE B2.4 Ground Snow Loads at 204 National Weather Service Locations at Which Measurements Are Made (*Continued*)

Location	Ground snow load* (lb/ft^2)		
	Years of record	Maximum observed	2% Annual probability
IOWA			
Burlington	11	15	17
Des Moines	40	22	22
Dubuque	39	34	32
Sioux City	38	28	28
Waterloo	33	25	32
KANSAS			
Concordia	30	12	17
Dodge City	40	10	14
Goodland	39	12	15
Topeka	40	18	17
Wichita	40	10	14
KENTUCKY			
Covington	40	22	13
Jackson	11	12	18
Lexington	40	15	13
Louisville	39	11	12
LOUISIANA			
Alexandria	17	2	2
Shreveport	40	4	3
MAINE			
Caribou	34	68	95
Portland	39	51	60
MARYLAND			
Baltimore	40	20	22
MASSACHUSETTS			
Boston	39	25	34
Nantucket	16	14	24
Worcester	33	29	44
MICHIGAN			
Alpena	31	34	48
Detroit City	14	6	10
Detroit Airport	34	27	18
Detroit—Willow	12	11	22
Flint	37	20	24
MICHIGAN (*Continued*)			
Grand Rapids	40	32	36
Houghton Lake	28	33	48
Lansing	35	34	36
Marquette	16	44	53
Muskegon	40	40	51
Sault Ste. Marie	40	68	77
MINNESOTA			
Duluth	40	55	63
International Falls	40	43	44
Minneapolis-St. Paul	40	34	51
Rochester	40	30	47
St. Cloud	40	40	53
MISSISSIPPI			
Jackson	40	3	3
Meridian	39	2	2
MISSOURI			
Columbia	39	19	20
Kansas City	40	18	18
St. Louis	37	28	21
Springfield	39	14	14
MONTANA			
Billings	40	21	15
Glagsow	40	18	19
Great Falls	40	22	15
Havre	26	22	24
Helena	40	15	17
Kalispell	29	27	45
Missoula	40	24	22
NEBRASKA			
Grand Island	40	24	23
Lincoln	20	15	22
Norfolk	40	28	25
North Platte	39	16	13
Omaha	25	23	20

TABLE B2.4 Ground Snow Loads at 204 National Weather Service Locations at Which Measurements Are Made (*Continued*)

Location	Ground snow load* (lb/ft^2)		
	Years of record	Maximum observed	2% Annual probability
NEBRASKA (*Continued*)			
Scottsbluff	40	10	12
Valentine	26	26	22
NEVADA			
Elko	12	12	20
Ely	40	10	9
Las Vegas	39	3	3
Reno	39	12	11
Winnemucca	39	7	7
NEW HAMPSHIRE			
Concord	40	43	63
NEW JERSEY			
Atlantic City	35	12	15
Newark	39	18	15
NEW MEXICO			
Albuquerque	40	6	4
Clayton	34	8	10
Roswell	22	6	8
NEW YORK			
Albany	40	26	27
Binghamton	40	30	35
Buffalo	40	41	39
NYC—Kennedy	18	8	15
NYC—LaGuardia	40	23	16
Rochester	40	33	38
Syracuse	40	32	32
NORTH CAROLINA			
Asheville	28	7	14
Cape Hatteras	34	5	5
Charlotte	40	8	11
Greensboro	40	14	11
Raleigh-Durham	36	13	14
NORTH CAROLINA (*Continued*)			
Wilmington	39	14	7
Winston-Salem	12	14	20
NORTH DAKOTA			
Bismark	40	27	27
Fargo	39	27	41
Williston	40	28	27
OHIO			
Akron-Canton	40	16	14
Cleveland	40	27	19
Columbus	40	11	11
Dayton	40	18	11
Mansfield	30	31	17
Toledo	36	10	10
Youngstown	40	14	10
OKLAHOMA			
Oklahoma City	40	10	8
Tulsa	40	5	8
OREGON			
Astoria	26	2	3
Burns	39	21	23
Eugene	37	22	10
Medford	40	6	6
Pendleton	40	9	13
Portland	39	10	8
Salem	39	5	7
Sexton Summit	14	48	64
PENNSYLVANIA			
Allentown	40	16	23
Erie	32	20	18
Harrisburg	19	21	23

TABLE B2.4 Ground Snow Loads at 204 National Weather Service Locations at Which Measurements Are Made (*Continued*)

Location	Ground snow load* (lb/ft^2)		
	Years of record	Maximum observed	2% Annual probability
PENNSYLVANIA (*Continued*)			
Philadelphia	39	13	14
Pittsburgh	40	27	20
Scranton	37	13	18
Williamsport	40	18	21
RHODE ISLAND			
Providence	39	22	23
SOUTH CAROLINA			
Charleston	39	2	2
Columbia	38	9	8
Florence	23	3	3
Greenville-Spartanburg	24	6	7
SOUTH DAKOTA			
Aberdeen	27	23	43
Huron	40	41	46
Rapid City	40	14	15
Sioux Falls	39	40	40
TENNESSEE			
Bristol	40	7	9
Chattanoga	40	6	6
Knoxville	40	10	9
Memphis	40	7	6
Nashville	40	6	9
TEXAS			
Abilene	40	6	6
Amarillo	39	15	10
Austin	39	2	2
Dallas	23	3	3
El Paso	38	8	8
Fort Worth	39	5	4
Lubbock	40	9	11
Midland	38	4	4
San Angelo	40	3	3
San Antonio	40	9	4
Waco	40	3	2
Wichita Falls	40	4	5

Location	Ground snow load* (lb/ft^2)		
	Years of record	Maximum observed	2% Annual probability
UTAH			
Milford	23	23	14
Salt Lake City	40	11	11
Wendover	13	2	3
VERMONT			
Burlington	40	43	36
VIRGINIA			
Dulles Airport	29	15	23
Lynchburg	40	13	18
National Airport	40	16	22
Norfolk	38	9	10
Richmond	40	11	16
Roanoke	40	14	20
WASHINGTON			
Olympia	40	23	22
Quillayute	25	21	15
Seattle-Tacoma	40	15	18
Spokane	40	36	42
Stampede Pass	36	483	516
Yakima	39	19	30
WEST VIRGINIA			
Beckley	20	20	30
Charleston	38	21	18
Elkins	32	22	18
Huntington	30	15	19
WISCONSIN			
Green Bay	40	37	36
La Crosse	16	23	32
Madison	40	32	35
Milwaukee	40	34	29
WYOMING			
Casper	40	9	10
Cheyenne	40	18	18
Lander	39	26	24
Sheridan	40	20	23

* To convert ground loadings to kN/m^2, multiply tabular value by 0.0479.

Source: Adapted from ANSI/ASCE 7-95, *Minimum Design Loads for Buildings and Other Structures,* American Society of Civil Engineers, New York, 1996, Table C7-1.

TABLE B2.5 Weight Loadings for Ice Coatings on Horizontal Pipelines

Pipe or lagging actual outside diameter D_o [in (mm)]	Ice coating thickness [in (mm)]					
	¼ (6.4)	½ (12.7)	1 (25.4)	1½ (38)	2 (51)	3 (76)
2 (51)	0.8	1.7	4.0	7.1	10.9	20.4
2½ (64)	0.9	2.0	4.8	8.2	12.2	22.4
3 (76)	1.1	2.4	5.4	9.2	13.6	24.5
4 (102)	1.5	3.1	6.8	11.2	16.3	28.6
6 (152)	2.1	4.4	9.5	15.3	21.8	36.7
8 (203)	2.8	5.8	12.2	19.4	27.2	44.9
10 (254)	3.5	7.1	15.0	23.5	32.6	53.1
12 (305)	4.2	8.5	17.7	27.5	38.1	61.2
14 (356)	4.8	9.9	20.4	31.6	43.5	69.4
16 (406)	5.5	11.2	23.1	35.7	49.0	77.5
18 (457)	6.2	12.6	25.8	39.8	54.4	85.7
20 (508)	6.9	13.9	28.6	43.9	59.8	93.8
22 (559)	7.6	15.3	31.3	47.9	65.3	102
24 (610)	8.3	16.7	34.0	52.0	70.7	110
26 (660)	8.9	18.0	36.7	56.1	76.2	118
28 (711)	9.6	19.4	39.4	60.2	81.6	127
30 (762)	10.3	20.7	42.2	64.3	87.0	135

Note: Ice thickness *t*, in. Loadings are in pounds per foot. To convert loadings to kg/m, multiply tabular loadings by 1.488.

Seismic (Earthquake) Loads

Under certain circumstances it is necessary or desirable to design a piping system to withstand the effects of an earthquake. Although the applications are not extensive, piping system seismic design technology is well developed and readily accessible. Many currently available piping stress analysis computer programs are capable of performing a detailed seismic structural and stress analysis, in addition to the traditional deadweight and thermal flexibility analyses. Most of these programs run on desktop microcomputers.

Because of the higher construction costs and design complexities introduced by the application of seismic design criteria, this type of work is normally done only in response to specific regulatory, code, or contractual requirements. An overview of these applications is outlined in the following paragraphs.

Nuclear Power Plants. Title 10, Part 50, of the Code of Federal Regulations requires that safety-related piping systems* in nuclear power plants be designed to withstand the effects of certain severe natural phenomena, including earthquakes.[12]

In general, seismic analysis of nuclear power plant piping is done to demonstrate that the piping system satisfies one of two specific objectives:

---

* A simplified definition of a safety-related system is one whose failure could result in a reduced capacity to mitigate the effects of an accident or which could ultimately result in the uncontrolled release of radioactivity into the environment. See Refs. 13 and 14.

Operability. Under this objective, the design of the piping system is such that it will retain its pressure-integrity status and remain capable of performing its design function before, during, and after the occurrence of a postulated seismic event at the plant site. Piping systems designed to meet operability criteria must normally comply with code-specified stress limits during the postulated earthquake.

Structural Integrity. Piping designed to this objective is not required to remain functional or to retain its pressure integrity during or after an earthquake. The only requirement is that the piping system retain its gross structural integrity so that it does not deflect excessively or cause the generation of secondary missiles. Either condition could cause impact and subsequent unacceptable damage to adjacent safety-related structures, systems, or components. Piping designed under this classification is normally allowed to attain stress levels, due to seismic excitation, well in excess of normal code limits. Of all modern industrial and commercial applications, nuclear power plant piping systems represent the largest single class of seismically qualified piping systems in service. It is estimated that the typical nuclear power unit contains approximately 100,000 ft of seismically qualified piping.[15] It is safe to say that the nuclear piping industry is the largest single contributor to the technology of seismic design of piping systems.

General Building Codes. Some building codes have rules devoted to the seismic design of buildings and other structures. Two examples of such codes are The Uniform Building Code[16] and The BOCA National Building Code.[17] In addition to these two codes, ANSI/ASCE 7–95, *Minimum Design Loads for Buildings and Other Structures,*[9] provides extensive guidance in the area of seismic design. Note that while both of the above-mentioned codes are intended to be national in scope and applicability, neither is mandatory unless specifically adopted by local statute or ordinance. Both ANSI/ASCE 7–95 and the BOCA code are specifically applicable to all piping systems NPS 2½ (DN 65) and larger in nominal pipe size, with smaller limits of applicability stated for piping systems in boiler rooms [NPS 1¼ (DN 32) and larger] and natural gas piping [NPS 1 (DN25) and larger]. The Uniform Building Code is only applicable to fire protection sprinkler piping systems. Since both the Uniform Building Code and the BOCA code are more specific to the design of buildings and related structures, their application to piping systems requires some interpretation on the part of the designer. It is therefore recommended that the piping designer who intends to apply these codes maintain a close liaison with jurisdictional authorities.

Contractual Arrangements. Under certain specific circumstances, an agreement might be reached to seismically design a piping system; this agreement would be made between the owner-operator of the system and another organization which has a vested financial interest in it, such as an insurance carrier. An example might involve the construction of a pipeline which carries a hazardous fluid through a seismically active region where no statutory design requirement exists. Under such circumstances the insurance carrier might require the owner to seismically design the line to limit the risk of rupture during a seismic event. Should a piping designer become involved in such an arrangement, every effort should be made to ensure that the design criteria are carefully specified, understood, and agreed to by all parties prior to starting design work.

Methods of Analysis. There are three methods of analysis in common use for the seismic design of piping systems: the *static coefficient method,* the *response spectra modal analysis method,* and the *time history analysis method.* The static coefficient method is the easiest to apply, but due to simplifying assumptions, it provides a very conservative design. The response spectra modal analysis method is about midway in complexity and provides a lesser degree of conservatism. This is the method used for the majority of piping system analysis and design. The time history analysis method is the least conservative and the most difficult to apply. This approach is used only when the most exacting (and least conservative) results are required. All three methods are discussed, in detail, in Chap. B4.

Effects of Seismic Analysis on Overall Design. The design costs associated with seismic analysis of a piping system go far beyond the simple costs of analyzing the piping system for ''just one more load.'' A piping system is usually a subordinate part of a larger structure, typically a building. Prior to analyzing the piping system to determine its seismic behavior, the analyst must first develop the forcing function. This involves a detailed analysis of the building structure itself to determine its response to the ground motion associated with the postulated earthquake. Development of the postulated ground motion normally requires the consideration of actual earthquake-induced ground motion data taken from geologically similar sites where earthquakes have actually been experienced. It can be seen that the seismic analysis of the piping system is really just the top layer of a multitier design exercise that requires the consideration of the dynamic interaction of a number of complex structures. Such an exercise requires a considerable expenditure of human resources and computer time.

Seismic qualification of a piping system also leads to greatly increased construction costs. Some of the principal contributors to those costs include the following:

Higher Loads. If the frequency content of the seismic excitation forces is coincident with the natural frequencies of the piping system, resonant amplification of the forcing function loads will occur. The resulting support system loads will be much higher than corresponding loads caused by deadweight effects alone. These higher loads translate to heavier, and consequently more expensive, supporting structures.

Multiple Load Paths. The multidirectional load characteristics of an earthquake acting on seismically qualified piping systems invariably result in the application of upward and/or lateral reactions on the building structure which would not be present in a typical static design.

Special Supporting Devices. Seismic design of high-temperature piping systems represents an especially challenging exercise. Thermal expansion effects require that the piping system be flexibly supported to allow for free thermal growth. The dynamic aspects of the design usually require that the piping system be rigidly supported during the earthquake to transfer the seismic loads back into the building structure. The simultaneous consideration of these diametrically opposite requirements results in the need to use a significant number of specialized (and therefore expensive) pipe support devices called *snubbers.* Snubbers lock up and carry load when subjected to the rapidly varying vibratory loads associated with an earthquake, yet remain free to permit thermal movement of the piping system during the relatively slow expansion or contraction caused by temperature changes.

Hydraulic Transient Loads

Of all the loading conditions that a piping system may experience in service, hydraulic transients are among the most damaging. The most common form of damage caused by hydraulic transient loads is the failure of pipe supports and supporting structures. However, occasional breaches of pressure integrity are also experienced, particularly where large-diameter thin-walled pipe is involved.

Two common types of hydraulic transient loads are waterhammer and relief valve discharge. These two load sets are discussed in detail below.

Waterhammer. If the velocity of water or other liquid flowing in a pipe is suddenly reduced, a pressure wave results which travels up and down the piping system at the speed of sound in the liquid. Depending upon the initial velocity and physical properties of the liquid and the mechanical properties of the piping system, the peak value of the pressure wave may exceed the steady-state pressure.

Waterhammer frequently occurs in systems that are subject to rapid changes in fluid flow rate, including systems with rapidly actuated valves, fast-starting pumps, and check valves. It is most severe in systems which convey fully condensed liquids; however, it is possible to develop waterhammer-type pressure transients in systems containing two-phase fluids and gases, although the magnitude of the pressure rise for these systems will generally be lower. The techniques used to calculate the magnitude of a waterhammer-induced pressure rise are discussed in Chap. B8.

Waterhammer must be considered in the design of those systems where it is likely to occur. For systems designed to codes that provide higher allowable stress criteria for occasional loads, the waterhammer-induced peak pressure should be evaluated under that loading category. For systems designed to codes which do not provide alternative design criteria for occasional loads, the design pressure may be set high enough to envelop the waterhammer-induced peak pressure. The designer is cautioned that this approach can result in an extremely conservative design, which may be prohibitively expensive. Consequently consideration of alternatives may be required.

Relief Valve Discharge Loads. Because of their rapid opening characteristics and generally high flow rates, the actuation of relief valves frequently results in the application of significant loads to the associated piping system. These loads are caused by the differential pressures across the valves, differential pressure between the valve discharge and the downstream discharge piping, and differential pressure between the discharge piping and the receiver or atmosphere. In addition, momentum effects caused by velocity changes at high flow rates result in secondary loads, which act on the attached (or nonattached) piping. These secondary loads must be reacted to by the supporting structures. Actual pipe stress levels in inadequately designed relief valve installations can exceed code-allowable values, and failures of such installations are common. Depending upon the pressure and temperature conditions of the system fluid, such failures can represent a personnel safety hazard as well as a costly economic issue.

To assist the piping designer in developing a safe and functional relief valve installation, Appendix II of ASME B31.1, *Power Piping,* was developed and issued.[18] This nonmandatory appendix to the code provides an extensive treatment of the relevant factors which must be considered to produce a successful design. Relief valve discharge loadings typically occur during a very small percentage of the total system operating time; consequently, they can be treated as occasional loads. The design for load combinations that include these hydraulic transients can therefore be based upon the higher code-defined stress limits.

Acoustically Induced Vibration Loads

When a piping system is exposed to fluctuating pressure disturbances, or pulsations, it frequently responds by vibrating. The magnitude and nature of the piping system vibration are dependent upon the frequency and energy content of the excitation. Low- to moderate-level periodic excitation, such as the pressure pulsations from positive-displacement or constant-speed centrifugal pumps, will not ordinarily excite significant levels of response in the piping system as long as the excitation frequencies are well removed from the natural vibrating frequencies of the pipe. If the pulsation frequency of the disturbance coincides with the natural frequencies of the piping system, however, resonant vibration can occur. Resonant response normally results in vibratory amplitudes many times that which would occur if the disturbance did not coincide with the natural frequencies of the piping system. Broad-spectrum or random excitation of the type associated with cavitation, bubble collapse, and extreme pressure reductions can also lead to resonant vibration. This type of vibration is known as *self-excited vibration.* The piping system draws energy from the broad-spectrum excitation and responds by vibrating at its own fundamental or harmonic natural frequencies.

Resonant response, whether due to the effects of fixed frequency or random excitation, can lead to unacceptable piping system damage. Cyclical stress reversals associated with resonant vibration can result in short-term fatigue failures, which may occur after only a few hours or days of operation. Reduction in the cyclical stress levels and attendant failures can be accomplished through a number of approaches.

When the excitation is a constant-frequency disturbance, ''decoupling'' the vibrating piping system from the source of excitation can often be accomplished by changing the frequency of the excitation. If the disturbance comes from a positive-displacement pump, changing the running speed will change the disturbance frequency. If a centrifugal pump is involved, a change in running speed or in the number of vanes on the impeller may have a beneficial effect.

Changing the natural response frequencies of the piping system can also mitigate the effects of fixed-frequency vibration. Again, the objective is to decouple or ''detune'' the piping system relative to the disturbance. This can often be accomplished by adding supplemental bracing to the pipe or by breaking the system into smaller segments by introducing flexible elements.

When the excitation is broad spectrum or random in nature, detuning by changing the piping system natural frequencies is usually not effective in solving the vibration problem. The modified piping system will continue to draw energy from the broad-spectrum excitation and will vibrate at its new natural frequencies. Mitigation of this class of problems usually requires the reduction of the energy level of the excitation or the ''strengthening'' of the piping system.

A large number of broad-spectrum vibration problems are the result of high-differential pressure reduction systems.[19] Excitation (noise) reduction for these types of systems can often be accomplished by the use of low-noise cage-type pressure-reducing valves or multiple orifices arranged for staged pressure reduction. In other cases, where the excitation is the result of turbulence, geometric changes to the piping system to smooth out the flow or reduce average and local velocities can have a beneficial effect.

The objective of the strengthening process is the reduction of piping system stresses to a level where fatigue failures are substantially eliminated. Much can be accomplished by the elimination of stress concentrations through the removal of geometric discontinuities. Examples of these discontinuities include hanger lugs, insulation supports, and small pipe (vent, drain, test, etc.) connections. Additionally, where changes in section are required, they should be effected by gradual, smooth changes in contour and generous fillet radii.

Special attention should be paid to all in-line welding done on pipelines that are subject to fluid-induced vibratory loadings. The use of inert-gas root pass welding with filler metal addition is recommended. This technique reduces the potential for the formation of critical root defects, which can lead to crack initiation and propagation. Radiographic and ultrasonic examinations done in excess of the minimum requirements may prove cost-effective in identifying stress-intensifying volumetric defects. Where such examinations are planned, weld backing rings should not be used since they complicate the job of interpreting the examination results.

Finally, the use of pipe wall thickness in excess of that required for pressure-integrity design alone has been found to be beneficial in mitigating the effects of fluid transient loads.

An experience was encountered which required the replacement of the main turbine bypass piping on a large nuclear unit because of multiple short-term acoustically induced vibration failures. The original system was made up of NPS 30 (DN 750) and NPS 24 (DN 600) × ⅜ in (10-mm) wall pipe. The original design of the piping wall thickness was based upon pressure-integrity considerations alone. Several pressure boundary failures were experienced at pipe support lugs, hanger clamps, and vent and drain connections after only a few hours of operation. The replacement material was NPS 30 (DN 750) × 1-in (25.4-mm) wall and NPS 24 (DN 600) × 1¼-in (31.5-mm) wall. In addition, special attention was paid to the elimination of nonaxisymmetric discontinuities and minor welded attachments. Lugs were replaced by rings, as shown in Fig. B2.2, and unnecessary small pipe connections were removed. The upgraded system has been operated extensively without experiencing any further pressure boundary failures.

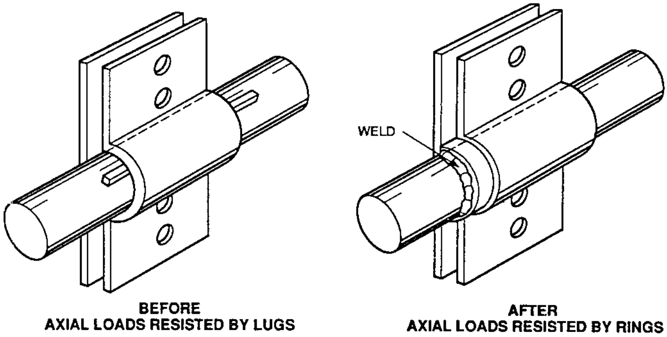

FIGURE B2.2 Use of shear rings instead of lugs to reduce localized pipe wall stress.

Since systems subject to flow-induced vibratory loads usually see those loads over much of their service life, their design should be based upon sustained loading criteria with no increase permitted in allowable stress.

Relative Anchor Movements

Every piping system requires some type of support system to function properly. The piping system can be supported from a building or other structure on traditional pipe hangers or from the ground on piers or bents. It even can be supported from another piping system. As long as all the piping system's support points remain motionless relative to the piping system and relative to one another, the system is unaffected. However, if some of the piping system's supports move relative to the pipe or relative to one another, the piping system will attempt to follow that motion and will experience a change in its state of stress. This condition is called *relative anchor movement.*

Relative movements of a piping system's supports can be caused by a number of phenomena. Some of the more common causes include

- Thermal expansion-related movement of the connection point on a larger piping system, where the subject system is attached
- Earthquake-induced relative movements of the various points on a building's structure where the subject piping system is supported
- Thermal expansion or mechanically induced movements of a piping connection (nozzle) on a machine, pressure vessel, or heat exchanger

The amount of stress, or more properly stated, the change in stress, that a piping system experiences from relative anchor movements is a function of two variables: the magnitude of the anchor movement and the stiffness of the system. As one might expect, larger movements will result in greater changes in stress. Moreover, for a given magnitude of movement, stiffer piping systems will experience greater changes in stress than those that are less stiff. In general, systems that are shorter, have fewer changes in direction, and are made up of larger-diameter pipe are stiffer than those for which the opposite conditions are true.

Certain phenomena result in a loading case in which both the magnitude and direction of the piping system's terminal movements are known, such as movements resulting from the thermal expansion of a pipe. In such a case, the known magnitudes and directions of the anchor movement are input to the piping system stress analysis, and the attendant stress levels are predicted.

There are other cases, however, in which only the magnitude of the anchor movement is known. Examples include earthquake-induced anchor movements or the movements of a building due to wind loading. In this case, the magnitude of the movement is input into analysis as known, but the direction is assumed such that the worst-case change in the state of stress of the piping system under study results. This approach ensures that the piping system stress analysis is conducted in the most conservative manner.

ENVIRONMENTAL FACTORS

The generalized definition of the term *stress,* when used in a structural connotation, is force per unit area. The mathematical equation that relates the stress σ to the load F and the load-resisting area A is

$$\sigma = \frac{F}{A} \tag{B2.8}$$

The loss of a piping system's pressure or structural integrity is invariably the result of its having attained a higher-than-acceptable state of stress. In the preceding section, it was shown that such an increase in the state of stress of a piping system could result from the application of one or more external (or internal) loads. In terms of Eq. (B2.8), it can be said that loading conditions or loads increase the state of stress of the system by increasing the value of the numerator F of the equation. However, there is a second mechanism through which the state of stress of a piping system may increase, perhaps to the point at which a failure occurs. That mechanism is the loss, or deterioration, of the load-resisting area *A*.

In this chapter the various mechanisms that result in the loss or deterioration of the viable load-resisting base material of a piping system are titled *environmental factors.* An attribute that is common to all environmental factors is that they effectively shorten the useful life of the piping system compared to what it would be if the factors were not present. The following discussion is limited to four specific environmental factors: corrosion, erosion, physical damage, and erosion-corrosion.

Corrosion

Within the context of this chapter, *corrosion* is the loss of load-carrying material in the pipe wall due to an electrochemical reaction between the piping material and the process fluid, or the environment.

Corrosion is normally accounted for in design by the provision of additional material in the pipe wall, the use of a suitable coating or lining, or the specification of a corrosion-resistant material. Frequently, the method used to deal with corrosion depends upon the corrosion rate.

For steel corroding in water, the corrosion rate is strongly influenced by the amount of oxygen present and by the temperature. The effect of these variations is shown in Fig. B2.3. Similar data exist in the literature for a wide variety of piping system materials and corrodants. Through the use of these data, the corrosion rate for a given process can often be estimated.

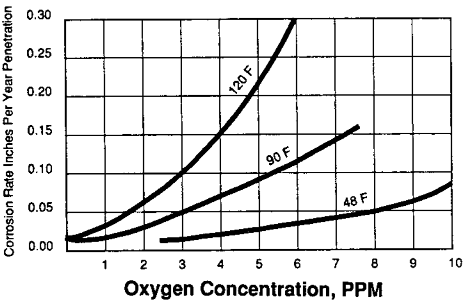

FIGURE B2.3 Effects of oxygen concentration on the corrosion of low-carbon steel in tap water at different temperatures. (*Reprinted by permission from* Corrosion Basics: An Introduction, *National Association of Corrosion Engineers, Houston, 1984, Figure 8.1, p. 149.*)

When corrosion is anticipated to occur at a slow, regular rate and this rate can be reliably predicted, it may be accommodated by the provision of excess material in the pipe wall known as the *corrosion allowance.* This excess material will be consumed over the design life of the piping system and therefore cannot be counted upon to serve any other purpose such as pressure integrity, structural strength, or mechanical strength. The relationship of the corrosion allowance to the other components of the total pipe wall thickness was discussed earlier in the section "Design Pressure."

In cases in which the corrosion rate is prohibitively high or would result in unacceptable contamination of the process fluid, a *pipe lining* or corrosion-resistant piping material may be specified.

Linings tend to be fragile; therefore, their use is limited to applications in which abrasion or other physical injury is not likely to occur. Many linings are temperature-sensitive and cannot be used in extreme-temperature service. Most lined pipe is fabricated from plain-carbon steel, although fiberglass-reinforced plastic pipe with an integral, chemically resistant plastic lining is available. Refer to Chaps. B9–B12 and D2. Joining methods are a significant factor in lined pipe design, and the joints must not allow any corrosion-sensitive material to be exposed to the process stream.

Abrasion or other physical attack may damage a lining and expose the corrosion-sensitive substrate. In such cases, a homogeneous material is frequently warranted. If the original corrosion-resistant surface is physically damaged, the remaining material will continue to resist corrosion. Many corrosion-resistant materials have good high-temperature strength properties and as such are used where linings or plain-carbon steels will not survive. Many near-ambient-temperature, high-corrosion-rate applications can be successfully and economically accommodated by the use of plastic pipe.

Erosion

Erosion is the wearing away of a surface by abrasion. The abrasion may be the result of particles suspended in the fluid stream, or it may be the result of direct action by the fluid itself.

When the erosion rate is small and consistent, and reliable quantitative data concerning that erosion rate are available, an *erosion allowance* may be provided in the design. The erosion allowance is analogous to the corrosion allowance discussed earlier in the sections ‘‘Design Pressure’’ and ‘‘Corrosion.’’ Excess material, over and above that required for pressure integrity and structural and mechanical strength, is provided. This excess material is allowed to waste away over the design life of the piping system.

When the erosion process is not readily quantified, a more qualitative approach to design is normally taken. One approach is to specify special erosion-resistant piping system materials. High-hardness materials are generally effective in resisting erosion. An alternative approach is to modify the piping system geometry to minimize or eliminate turbulent flow, direct pipe wall impingement, and vortex flow, all of which increase piping system erosion.

Physical Damage

Physical damage or abuse also can be a significant factor in the design of piping systems. This is particularly true of low-pressure, thin-walled piping, which has little resistance to external loadings.

Direct buried pipe is subject to damage from soil pressure and loads from overhead traffic. Uniformly distributed soil pressure loads can normally be estimated with reasonable accuracy and the pipe designed for these loads using methods described in the literature.[20] The effects of heavy concentrated overhead loads cannot be accounted for as easily. Consequently, pipelines which run under heavily trafficked roads or railroad tracks are frequently run through oversized sleeves or conduits which prevent the imposed loads from being directly transmitted to the pipe.

Piping systems of all sizes that carry important services, toxic fluids, or high-pressure, high-temperature fluids should be physically protected from impact from passing motor vehicle traffic, including such vehicles as industrial forklift trucks. The preferred method of protection is to route the piping outside the reach of passing traffic. Where this is not possible, substantial barriers should be erected to protect the piping from impact.

Small-diameter piping takeoffs from large headers such as vents, drains, and instrumentation source connections are particularly prone to damage from unspecified external loads. Common design practice is to make the small piping from the header out to the first isolation valve at least one schedule heavier than called for by the pressure design. Similarly, the first isolation or *root valve* is normally made one or two pressure classes heavier than called for by pressure design considerations. These steps may make the small lines durable enough to resist random impact or other undefined external loadings that can occur during shipping, construction, or operation.

Erosion-Corrosion (Flow-Assisted Corrosion)

When iron or steel corrodes in water, a soluble oxide layer called *magnetite* is formed. During steady-state conditions, the magnetite attains a constant protective thickness which promotes a uniform corrosion rate. If the magnetite layer is ‘‘swept’’ by a water film deposited by wet steam or by a locally high-velocity jet in a liquid stream, the dissolution rate of the magnetite increases. This results in an increase in the localized corrosion rate and an attendant loss of metal from the surface. Since the sweeping away of the oxide layer is an essential part of this corrosion process, it has been named *erosion-corrosion* [also known as *flow-assisted corrosion* (*FAC*)].

A number of factors have been found to affect the rate of erosion-corrosion (FAC) in piping systems. In wet-steam systems, percentage of moisture, material composition, pH and water chemistry, temperature, oxygen level, and flow path geometry have all been found to be significant.[21] In water piping systems, piping material, temperature, pH and oxygen level, and flow path geometry all affect the rate of erosion-corrosion.[22] Among the variables cited above, two that can be readily controlled in design are the piping system materials and the flow path geometry.

Carbon steel is known to be highly susceptible to erosion-corrosion (FAC). Both chromium-molybdenum (Cr-Mo) and austenitic stainless steels are significantly less susceptible. The EPRI publication ‘‘Erosion/Corrosion in Nuclear Power Plant Steam Piping: Causes and Inspection Program Guidelines’’[21] cites a study that indicates the rate of erosion-corrosion (FAC) in Cr-Mo wet-steam piping is one-tenth that of carbon steel. Low-alloy Cr-Mo materials can usually be substituted for carbon steel without any other significant design changes. The materials are readily welded to each other, and both have similar physical properties such as tensile and yield strength, density, and thermal expansion coefficient.

The substitution of austenitic stainless steels will normally require some additional engineering. These materials have a thermal expansion rate that averages 50 percent greater than that of plain-carbon steel. Accordingly, increases in terminal reactions and predicted pipe support movements can be expected. These may require that the pipe be rerouted or that different pipe support components be provided.

Piping system geometry plays an important role in mitigating the effects of erosion-corrosion (FAC). High, localized velocities, vortex flow, jet, and direct stream impingement all increase the rate of magnetite dissolution and therefore increase the rate of erosion-corrosion. Gradual transitions in flow section pipe size and geometric changes to smooth out variations in flow velocity and the provision of shallow-angle intersections will all have a beneficial effect. The removal of discontinuities such as weld backing rings and sharp edges at branch connections will also reduce erosion-corrosion (FAC). The areas immediately downstream of valves and flow measurement orifices are frequently prone to erosion-corrosion due to vortex formation. These areas will benefit from the addition of flow liners or the substitution of erosion-corrosion-resistant alloys.

MATERIALS-RELATED CONSIDERATIONS

The variety of piping system materials currently in use is extensive and continually growing. The purpose of this section is to provide a brief overview of the common engineering properties of those materials and to describe how those properties influence the design process. For the most part, discussions of specific material characteristics will be limited to plain-carbon and low-alloy steel piping materials. Many of the concepts discussed, however, are applicable to virtually all piping materials.

Strength

Most piping design codes relate the allowable working stresses for materials to their yield strength or ultimate tensile strength at the working temperature. For example, the *allowable working stresses* for materials used for construction in accordance with ASME B31.1, *Power Piping,* are developed using rules defined in the ASME Boiler and Pressure Vessel Code, Section II, *Materials.* At any temperature below the creep range, those rules require that the allowable working stress be set at a value no greater than the lowest of the following alternatives[23]:

- One-fourth of the specified minimum tensile strength at room temperature
- One-fourth of the tensile strength at operating temperature
- Two-thirds of the specified minimum yield strength at room temperature
- Two-thirds of the yield strength at operating temperature

As the temperature of most common pressure-retaining materials increases from ambient, their tensile and yield strengths decrease. Application of the above rules ensures that the decreasing strength of piping materials, with increasing temperature, is reflected in the allowable stresses used for design.

At temperatures within the creep range, the allowable working stress is set at a value equal to the lowest of the following[23]:

- 100 percent of the average stress for a creep rate of 0.01 percent/1000 h
- 67 percent of the average stress for rupture at the end of 100,000 h
- 80 percent of the minimum stress for rupture at the end of 100,000 h

When carbon steels are exposed to temperatures greater than 775°F (413°C) for long periods, the carbide phase may convert to graphite. *Graphitization* causes steels to experience brittle fracture at stress levels well below their short-term rupture strength. In recognition of this phenomenon, the ASME B31.1, *Power Piping*, Code provides the following warning statement in the allowable-stress tables:

> Upon prolonged exposure to temperatures above 775°F (413°C), the carbide phase of carbon steel may be converted to graphite.[24]

For temperatures in excess of 775°F (413°C), chromium-molybdenum low-alloy steels or high-alloy stainless steels may be used. These steels offer almost complete freedom from graphitization and enhanced creep-rupture resistance. ASME B31.1 allows the use of these materials at temperatures up to 1200°F (649°C).

Toughness

Toughness, or *ductility*, is the ability of a material to resist impact, to withstand repeated reversals of stress, or to absorb energy when stressed beyond the elastic limit. Steel is normally considered to be a ductile material. Contrary to expectation, however, steels sometimes rupture without prior evidence of distress. Under certain conditions, steel may shatter just as glass. In piping, however, this behavior generally occurs only at low temperatures.

The *transition temperature* for any steel is the temperature above which the steel behaves in a predominantly ductile manner and below which it behaves in a predominantly brittle manner. Steel with a high transition temperature is more likely to behave in a brittle manner during fabrication or in service. It follows that a steel with a low transition temperature is more likely to behave in a ductile manner. Therefore, steels with low transition temperatures are generally preferred for service involving severe stress concentrations, impact loading, low operating temperatures, or a combination of all three.

Table B2.6 indicates the low-temperature limitations of various piping materials.

TABLE B2.6 Low-Temperature Operating Limits for Selected Piping Materials

Low-temp. limit, °F (°C)	Material and suitable ASTM designation	Comments
0 (−18)	Mild steel (A53, A135)	No requirements other than suitable pressure rating
−20 (−29)	Mild steel (A53, A135)	Reduce pressure rating 1% for each 1°F below zero, or Charpy impact test, 15 ft · lb at design temperature
−50 (−46)	Killed or limited carbon steel (A333, Gr. 1)	Charpy impact test, 15 ft · lb at design temperature
−150 (−101)	3½% Ni-steel (A333, Gr. 3)	Charpy impact test, 15 ft · lb at design temperature
−325 (−198)	Austenitic stainless steel (types 304, 316, etc.)	Limited carbon content
No limit	Nonferrous copper, brass, aluminum	Aluminum, copper, brass

Low-alloy steels may be used at low temperatures 0°F (−18°C) when they have a Charpy keyhole impact value of at least 15 ft · lb (2.1 kg · m) at the lowest design temperature. Austenitic stainless steels with limited carbon content, copper and copper alloys, and aluminum do not experience transitions in impact strength from ductile to brittle fracture and, therefore, may be used for low temperatures without pressure-rating penalties.

Low-temperature piping is generally covered with insulation which, in addition to limiting heat transfer, helps provide protection from external impact. This, however, is not sufficient insurance against the type of damage that could result if a pipe should fracture.

Additional perspectives on materials strength and toughness are provided in Chap. A3.

Corrosion Resistance

Considered as a material property, *corrosion resistance* is a measure of a piping system material's relative inertness to chemical attack from a specific process fluid at the system's normal operating temperature, or its environment (see earlier section ''Corrosion''). The importance of considering the system's operating temperature cannot be overemphasized. It is well known that many chemical reactions are highly temperature-dependent. A particular piping system material could be virtually immune to chemical attack by a specific corrodant at one temperature, while prone to excessive attack by the same corrodant at a higher temperature.

Within this context, then, it is clear that there is no such thing as a universally corrosion-resistant material. All common piping system materials react with some process fluids (corrodants) at certain temperatures. Therefore, when one is pursuing a ''corrosion-resistant'' material for a specific application, the objective is to identify a material whose corrosion rate in the presence of a specific corrodant is negligible, or at least acceptable, over the design life of the piping system.

It is important also to consider the effect corrosion may have on the process fluid. Under certain conditions, the dissolution of the base metal or the corrosion products into the process stream may require economic or technical considerations that go beyond the piping system's pressure-containing parts. In some cases, the major consideration in choosing a piping system material may be the preservation of the chemical purity of the process fluid. Such is usually the case in choosing piping system materials that handle food products and piping used in many chemical process operations.

THERMAL INSULATION

Whenever the surface temperature of a piping system differs significantly from that of its surrounding environment, the potential need for an insulation system exists. An insulation system serves three principal purposes:

- The significant reduction in the transfer of thermal (heat) energy to or from the surface of the piping system
- The prevention of moisture formation and collection on the surface of the piping system due to condensation

- The prevention of potentially injurious personnel contact with the surface of the piping system

The reduction in heat transfer to or from the surface of a piping system will minimize the gain or loss in temperature of the process fluid, thus maximizing the capability of the fluid to perform its intended function. Minimizing heat exchange between the piping system and the environment also minimizes the unwanted heating or cooling of the environment. This improves the comfort level for the inhabitants, or improves the operating conditions for equipment.

Most insulating systems used aboveground consist of preformed components that are mechanically attached to the pipe. Low-temperature insulation is frequently made of expanded cellular plastic or foam rubber materials. Moderate-temperature insulations are frequently made from glass-fiber products. High-temperature insulation is usually made of preformed cementations or refractory materials or blankets made from ceramic fibers. Insulation used for buried pipe is frequently in loose granular form, so it can be poured loosely into the trench to surround the pipe and isolate it from the ground environment.

If the surface temperature of a piping system is less than the dew point of the surrounding air, water vapor in the air will condense on the surface of the pipe. This condition can be detrimental. The *condensation* can collect and drip onto surfaces below the pipe, thus doing damage. The condensate can also saturate the piping insulation, thus significantly increasing its thermal conductivity and reducing its insulating capability. To prevent condensation on an insulated pipe, the airborne water vapor must be prevented from reaching the pipe surface. This is normally accomplished by providing a *vapor barrier* at the outer surface of the insulation. An adequate vapor barrier may be constructed from a well-fitted metal jacket, an extruded plastic or rubber coating, or a spiral-wrapped impervious tape coating. Whatever the form, the vapor barrier must prevent the airborne water vapor from entering the pores of the insulation and migrating toward the cool pipe surface, where condensation can occur.

Extremely hot or cold piping systems can pose a contact safety hazard to personnel in the vicinity. Surface temperatures above 135°F (57°C) can cause severe burns to unprotected skin, and temperatures below approximately 20°F (−7°C) can cause freeze damage. Thermal insulation can be designed such that the insulation surface temperature is maintained in a safe range.

Frequently piping systems that are otherwise uninsulated will have insulation installed in accessible areas to provide personnel protection.

For a complete treatment of the engineering principles involved in designing a thermal insulation system for piping, see Chap. B7.

SIZING OF A PIPING SYSTEM

The term *sizing of a piping system* refers to the completion of two independent design functions: the fluid flow design and the pressure-integrity design. The purpose of the fluid flow design is to determine the minimum acceptable inside diameter of the various segments of the piping system. The purpose of the pressure-integrity design is to determine the minimum acceptable pipe wall thickness and the pressure ratings of the in-line components.

System Fluid Flow Design

The objective of the fluid flow design is to determine the minimum acceptable inside diameter of each segment of the piping system that will accommodate the design flow rate while maintaining the pressure drop and flow velocity within reasonable limits.

Most piping systems use pumps to develop the pressure or head required to maintain the system design flow rates. Piping system pressure drops must be maintained within reasonable values to limit the installed size of the system pumps and their prime movers. Pump and prime-mover size limitations are necessary to control initial system construction costs and continuing system operating costs. The optimum pipe size is based on an economic tradeoff between the installed capital cost of the piping system and the sum of the capital plus lifetime operating costs of the pumping system.

System flow velocities are limited by design to avoid a number of potential operating problems. These problems have already been discussed in previous sections of this chapter. In the absence of any other formal or more limiting criteria, the flow velocities given for water in Table B2.7 and for steam in Table B2.8 are considered reasonable for normal industrial applications.

TABLE B2.7 Reasonable Design Velocities for Water Flowing through Pipes

Service condition	Reasonable velocity, ft/s (m/s)
Boiler feed	8–15 (2.5–4.6)
Pump suction and drain lines	4– 7 (1.2–2.1)
General service	4–10 (1.2–3.0)
City water	to 7 (to 2.1)

Source: Crane Technical Paper 410, *Flow of Fluids through Valves, Fittings, and Pipe.* The Crane Company, New York, 1985, pp. 3–6.

The detailed fluid flow design of a piping system requires the consideration of a number of fluid parameters including flow rate, viscosity, density, and pipe wall frictional drag. Further discussions of this aspect of the pipe sizing process are provided in Chap. B8.

TABLE B2.8 Reasonable Design Velocities for Steam Flowing through Pipes

Condition of steam	Pressure P [psig (kPa)]	Service	Reasonable velocity V ft/min	Reasonable velocity V m/s
Saturated	0–25 (173)	Heating (short lines)	4,000– 6,000	20– 31
Saturated	25 (173) and up	Powerhouse equipment, process piping, etc.	6,000–10,000	31– 51
Superheated	200 (1380) and up	Boiler and turbine leads, etc.	7,000–20,000	36–100

Source: Crane Technical Paper 410, *Flow of Fluids through Valves, Fittings, and Pipe,* The Crane Company, New York, 1985, pp. 3–16.

Pressure-Integrity Design

The pressure-integrity design of a piping system normally requires the consideration of at least two issues. The first is the determination of the minimum or nominal pipe wall thickness, and the second is the determination of the pressure rating of the in-line components, such as fittings and valves.

Determination of Pipe Wall Thickness

After the fluid design is complete and the minimum inside diameters of the various segments of the piping system are determined, the piping pressure-integrity design may proceed. The major steps in the process are as follows:

1. Using the minimum inside diameter determined from the fluid flow evaluation, select the next-larger standard nominal or outside diameter (OD) size pipe from the listings provided in ASME B36.10M for standard wrought steel pipe or B36.19M for stainless-steel pipe (see earlier section ‘‘The ASME Pressure Classification System’’).
2. Based upon the fluid and service, select a suitable piping material, and if necessary, determine the required corrosion, erosion, joining, or mechanical strength allowances.
3. Using equations provided in the design code, calculate the required minimum wall thickness to provide for pressure integrity and allowances.
4. Refer to ASME B36.10M or B36.19M to select an appropriate nominal wall thickness or schedule. Refer to App. E2 and E2M.
5. Confirm that the standard manufacturing tolerance will not reduce the nominal wall thickness selected in step 4 below the minimum required, as calculated in step 3.
6. Confirm that the inside diameter of the pipe selected, based upon the nominal wall thickness selection of step 4, is compatible with the minimum inside-diameter requirements obtained from the fluid flow evaluation.

The process described above is demonstrated in the following example:

Example B2.3. A carbon-steel pipe having a required minimum inside diameter of 11.2 in (284 mm) is to transport water at 700 psig (4830 kPa gage) and 90°F (32°C). The design code is ASME B31.1, and the design life is 8 years. The water has a nominal oxygen content of 1 ppm. Butt-welded construction is used.

Evaluation. An economical grade of seam-welded carbon-steel pipe (ASTM A53 Grade A) is selected. From ASME B31.1, Appendix A, Table A-1, the allowable working stress at 90°F (32°C) is 10,200 psi (70.4 MPa). From Fig. B2.3, the corrosion rate is estimated at 0.02 in (0.5 mm) per year. The pressure-integrity design will be based upon ASME B31.1, Paragraph 104.1.2, equation (3)[25]:

$$t_m = \frac{PD_o}{2(SE + Py)} + A \qquad \text{(B2.5)}$$

From ASME B36.10M, NPS 12 (DN 300) [12.75-in (324-mm) OD] is tentatively selected.

Using the stated 8-year design life and 0.02 in/yr corrosion rate, the total corrosion allowance of $8 \times 0.02 = 0.16$ in (4 mm) is calculated. Butt-welded construction is specified; therefore, no additional wall thickness allowance for joining (threading, grooving, etc.) is required.

From ASME B31.1, Table 104.1.2(A), $y = 0.4$ is selected for ferritic steels at temperatures at or below 900°F (482°C).

Equation (B2.5) may now be used to calculate the required minimum wall thickness:

$$\begin{aligned} t_m &= \frac{PD_o}{2(SE + Py)} + A \qquad \text{(B2.5)} \\ &= \frac{700 \times 12.75}{2(10{,}200 + 0.4 \times 700)} + 0.16 \\ &= 0.586 \text{ in } (14.9 \text{ mm}) \end{aligned}$$

From ASME B36.10M, under the listings for NPS 12 (DN 300), Schedule 80 pipe with a nominal wall thickness of 0.688 in (17.5 mm) is tentatively selected.

The wall thickness tolerance for ASTM A53 pipe, which is +0, −12½ percent, is checked next:

$$0.688 \times 0.875 = 0.602 \text{ in}$$

$$0.602 \text{ in } (15.3 \text{ mm}) > 0.586 \text{ in } (14.9 \text{ mm})$$

Finally, the nominal inside diameter is checked against the minimum flow diameter:

$$12.75 - 2(0.688) = 11.374 \text{ in}$$

$$11.374 \text{ in } (289 \text{ mm}) > 11.2 \text{ in } (284 \text{ mm})$$

The problem requirements are satisfied; NPS 12 (DN 300) seam welded Schedule 80 pipe meeting ASTM Specification A53 Grade A is acceptable.

The previous example did not consider the effects of bending on the pipe wall. In most instances the pressure design will dominate in the determination of pipe wall thickness. However, if the pipe span between supports is unusually long or if the pipe has a very heavy in-line component, such as a valve, then the longitudinal bending stress may dominate the design. This facet of the design is considered in the piping stress analysis discussion of Chap. B4.

To complete this chapter, five more example problems are presented. They demonstrate the concepts developed and bring them together to show how the design of a simple piping system might proceed.

Determining the Pressure Class for In-Line Components

The first two examples provided here demonstrate the process used to determine the pressure classification for in-line components. The first demonstrates the selection process for a standard flange; the second demonstrates the selection process for a special-class valve.

Example B2.4. An NPS 16 (DN 400) carbon-steel pipeline operates at 840 psig (5800 kPa gage) and 740°F (393°C). Select a standard weld-neck flange for the service.

Evaluation. Table B2.1 lists various materials of construction for standard pipe flanges. Under Material Group 1.1, ASTM Specification A105, *Forgings, Carbon Steel, for Piping Components*, is listed. Next refer to Table B2.3, which lists ASME pressure-temperature ratings for Material Group 1.1 flanges. Noted that a Class 600 flange has a pressure-temperature rating of 1010 psig (6970 kPa gage) at 750°F (399°C). Since this rating exceeds the requirements of 840 psig (5800 kPa gage) at 740°F (393°C), this flange is acceptable.

Example B2.5. An NPS 12 (DN 300) butt-welding end gate valve is required to operate at 2350 psig (16,220 kPa gage) and 1015°F (546°C). The valve material is ASTM A217 Grade WC9. Determine the appropriate ASME pressure classification.

Evaluation. Tables B2.9a and B2.9b list the pressure-temperature ratings for standard and special class valves of ASTM A217 Grade WC9.

There are two correct answers to this problem. The first and simplest answer is to select a standard Class 4500 valve from Table B2.9a. This valve has a pressure-temperature rating of 2625 psig (18,040 kPa gage) at 1050°F (566°C) and obviously meets the stated requirements. However, this valve may prove to be a very expensive alternative since Class 4500 valves are massively constructed, and valve prices vary according to the weight of the material used in their construction.

The second alternative is to consider the Special Class 2500 valves whose ratings are provided in Table B2.9b. *Special-class valves* undergo mandatory nondestructive examinations and, if necessary, defect repairs to allow them to qualify for higher pressure-temperature ratings. For a more detailed discussion of special-class valves, the reader is referred to Section 8 of ASME B16.34.[26] To determine whether a Special Class 2500 valve will meet the requirements of Example B2.3, a linear interpolation of the ratings in Table B2.9b is required. The process is illustrated below:

Temperature, °F	*Pressure, psig*
1000	2715
1015	P
1050	1820

$$\frac{1050 - 1015}{1050 - 1000} = \frac{P - 1870}{2715 - 1870}$$

$$\frac{35}{50} = \frac{P - 1870}{845}$$

$$P = 1870 + \frac{35}{50} \times 845$$

$$= 2462\,\text{psig}\ (16{,}990\,\text{kPa gage})$$

Since the interpolated pressure rating of 2462 psig (16,990 kPa gage) is greater than the specified requirement of 2350 psig (16,220 kPa gage), a Special Class 2500 valve will satisfy the requirements of Example B2.5.

Determining the Design Conditions and Pressure Class of a Piping System

To minimize procurement complications and storage and handling problems during the construction phase, piping systems are frequently designed for the maximum

TABLE B2.9a Pressure-Temperature Ratings for Standard Class Valves Made of ASTM A217 Grade WC9 Body Material*

Temperature (°F)	Working pressure by classes (psig)†							
	150	300	400	600	900	1500	2500	4500
−20 to 100	290	750	1,000	1,500	2,250	3,750	6,250	11,250
200	260	750	1,000	1,500	2,250	3,750	6,250	11,250
300	230	730	970	1,455	2,185	3,640	6,070	10,925
400	200	705	940	1,410	2,115	3,530	5,880	10,585
500	170	665	885	1,330	1,995	3,325	5,540	9,965
600	140	605	805	1,210	1,815	3,025	5,040	9,070
650	125	590	785	1,175	1,765	2,940	4,905	8,825
700	110	570	755	1,135	1,705	2,840	4,730	8,515
750	95	530	710	1,065	1,595	2,660	4,430	7,970
800	80	510	675	1,015	1,525	2,540	4,230	7,610
850	65	485	650	975	1,460	2,435	4,060	7,305
900	50	450	600	900	1,350	2,245	3,745	6,740
950	35	375	505	755	1,130	1,885	3,145	5,665
1000	20	260	345	520	780	1,305	2,170	3,910
1050	20‡	175	235	350	525	875	1,455	2,625
1100	20‡	110	145	220	330	550	915	1,645
1150	20‡	70	90	135	205	345	570	1,030
1200	20‡	40	55	80	125	205	345	615

* For special limitations placed on the materials covered by this table, see ASME B16.34, Table 2-10A.

† To convert working pressures to kPa gage, multiply tabular values by 6.9.

‡ For welding-end valves only. Flanged-end valve ratings terminate at 1000°F.

Source: Adapted from ASME B16.34, *Valves—Flanged, Threaded, and Welding End,* American Society of Mechanical Engineers, New York, 1996, Table 2-10A, p. 45.

conditions permitted for each pressure class. This allows conservatism, which can accommodate changes in design conditions as a result of design development and minimizes the need to specify and buy different piping for each individual application. In addition, this approach provides an added allowance in the event of unexpected deterioration of the pipe wall thickness in service.

The following examples provide an illustration of determining the design pressure and design temperature for a piping system. They also provide insight into the method of establishing the pressure-temperature rating or pressure class of an entire piping system.

Example B2.6

Fluid:	Water
Normal conditions:	350 psig (2415 kPa gage) @ 350°F (177°C)
Maximum conditions:	(1) 375 psig (2588 kPa gage) @ 390°F (199°C)
	(2) 435 psig (3002 kPa gage) @ 375°F (191°C)

TABLE B2.9b Pressure-Temperature Ratings for Special Class Valves Made of ASTM A217 Grade WC9 Body Material*

Temperature (°F)	Working pressure by classes (psig)†							
	150	300	400	600	900	1500	2500	4500
−20 to 100	290	750	1,000	1,500	2,250	3,750	6,250	11,250
200	290	750	1,000	1,500	2,250	3,750	6,250	11,250
300	285	740	990	1,485	2,225	3,705	6,180	11,120
400	280	725	965	1,450	2,175	3,620	6,035	10,865
500	275	720	960	1,440	2,160	3,600	6,000	10,800
600	275	720	960	1,440	2,160	3,600	6,000	10,800
650	275	715	955	1,430	2,145	3,580	5,965	10,735
700	275	710	955	1,425	2,135	3,555	5,930	10,670
750	265	690	920	1,380	2,070	3,450	5,750	10,350
800	260	675	895	1,345	2,020	3,365	5,605	10,095
850	245	645	855	1,285	1,930	3,215	5,355	9,645
900	230	600	800	1,200	1,800	3,000	5,000	9,000
950	180	470	630	945	1,415	2,355	3,930	7,070
1000	125	325	435	650	975	1,630	2,715	4,885
1050	85	220	290	435	645	1,095	1,820	3,280
1100	55	135	185	275	410	685	1,145	2,055
1150	35	85	115	170	255	430	715	1,285
1200	25	50	70	105	155	255	430	770

* For special limitations placed on the materials covered by this table, see ASME B16.34, Table 2-10B.
† To convert working pressures to kPa gage, multiply tabular values by 6.9.
Source: Adapted from ASME B16.34, *Valves—Flanged, Threaded, and Welding End,* American Society of Mechanical Engineers, New York, 1996, Table 2-1.10B, p. 46.

Condition 1 has a maximum duration of 3 h. Condition 2 has a maximum duration of 10 min in any 24-h operating period.

Pipe sizes: NPS 6 (DN 150), NPS 10 (DN 250), NPS 14 (DN 350)

Evaluation. The piping system being considered is designed in accordance with ASME B31.1; however, the approach discussed below can be used to design a piping system in accordance with other codes.

The fluid and the temperature dictate the use of carbon-steel piping. Assume the following materials:

Pipe: ASTM A106 GR B
Valve body: ASTM A216, WCB
Flanges: ASTM A105

Determine the pressure-temperature ratings for all conditions. The ratings are determined from the pressure-temperature tables of ASME B16.5[1] and ASME

B16.34.[26] The flange and valve materials are in material group 1.1; refer to ASME B16.5, Table 2-1.1, and ASME, B16.34, Table 2-1.1.

350 psig (2415 kPa gage) @ 350°F (177°C)—Class 300
375 psig (2588 kPa gage) @ 390°F (199°C)—Class 300
435 psig (3002 kPa gage) @ 375°F (191°C)—Class 300

Since Class 300 is required for each condition, the design conditions should be selected so as not to exceed the pressure-temperature ratings of Class 300. Otherwise, the design conditions will be overly conservative.

Determine design conditions from normal and maximum conditions. The design conditions are selected to ensure that the minimum wall thickness requirements of ASME B31.1 are met. This requires consideration of two factors: pressure and temperature.

Pressure. The greater the pressure, the greater the required wall thickness of the pipe. The design pressure must be selected so that each of the following requirements is satisfied:

- The design pressure shall be not less than the maximum sustained operating pressure (MSOP) within the piping system including the effects of static head (ASME B31.1, Paragraph 101.2.2).
- The design pressure shall be of sufficient magnitude that the stress resulting from a variation in pressure and/or temperature in the piping system does not exceed the allowable stress by more than 15 percent during 10 percent of any 24-h operating period, or by more than 20 percent during 1 percent of any 24-h operating period (see ASME B31.1, Paragraph 102.2.4).

Maximum condition 1 will cause a stress in the pipe wall which is less than 15 percent over the stress caused by the normal condition pressure

$$\frac{375}{350} < 1.15$$

But the duration exceeds 10 percent of a 24-h operating period. Therefore, maximum condition 1 must be considered as a sustained condition, which requires that the design pressure not be less than 375 maximum condition. Condition 2 has a duration of less than 1 percent of a 24-h operating period and will not cause a stress greater than 20 percent over the allowable stress using a design pressure of 375 psig.

$$\frac{435}{375} < 1.2$$

Therefore, maximum condition 2 can be treated as an occasional condition.

The minimum acceptable design conditions are

$$\text{Design pressure} = 375\ \text{psig}\ (2588\ \text{kPa gage})$$

$$\text{Design temperature} = 390^\circ\text{F}\ (199^\circ\text{C})$$

Example B2.7

Fluid:	Steam
Normal conditions:	400 psig (2760 kPa gage) @ 600°F (316°C)
Maximum conditions:	575 psig (3970 kPa gage) @ 600°F (316°C)

This condition occurs in less than 1 percent of any 24-h operating period.

Pipe sizes: NPS 12 (DN 300), NPS 18 (DN 450)

Evaluation. The fluid and the temperatures allow the use of carbon steel. Assume the following materials:

Pipe: ASTM A106, Gr. B
Valve body: ASTM A216 WCB
Flanges: ASTM A105

Determine the pressure-temperature ratings. With the help of ASME B16.5, Table 2-1.1, and ASME B16.34,[26] Table 2-1.1, the suitable classes for the normal and maximum conditions are established as follows:

400 psig (2760 kPa gage) @ 600°F (316°C)—Class 300
575 psig (3970 kPa gage) @ 600°F (316°C)—Class 400

The normal condition requires Class 300 flanges and valves while the maximum condition requires Class 400 flanges and valves. The maximum permissible (sustained) pressure for Class 300 at 600°F (316°C) is 550 psig (3,800 kPa gage). This pressure may be exceeded in the same manner as discussed in Example B2.4 (15 percent for 10 percent of the time; 20 percent for 1 percent of the time). Thus, the peak pressure that the flanges and valves may be exposed to is greater than the system maximum of 575 psig (3,970 kPa gage). Therefore, Class 300 can be used.

Determine the design conditions such that 575 psig exceeds the design pressure by not more than 20 percent.

$$\text{Design pressure} \times 1.2 = 575\,\text{psig}\,(3970\,\text{kPa gage})$$

$$\text{Design pressure} = \frac{575}{1.2} = 479\ \text{psig}\,(3310\,\text{kPa gage})$$

The minimum design conditions are

$$\text{Design pressure} = 479\,\text{psig}\,(3310\,\text{kPa gage})$$

$$\text{Design temperature} = 600^\circ\text{F}\,(316^\circ\text{C})$$

This piping can also be designed for the maximum design condition permitted for Class 300 flanges made from material group 1.1 per ASME B16.5. The maximum design conditions, per B16.5, Table 2-1.1, are

$$\text{Design pressure} = 550\,\text{psig}\,(3800\,\text{kPa gage})$$

$$\text{Design temperature} = 600^\circ\text{F}\,(316^\circ\text{C})$$

The piping may also be designed for the minimum design conditions shown above (479 psig at 600°F). Sometimes this can result in substantial savings in material, fabrication, and installation costs. This is particularly true for high-pressure and high-temperature applications that require the use of low- and high-alloy steels.

Design of Piping for Internal and External Pressure

Example B2.8. An NPS 24 (DN 600) seamless steel pipeline carries purified water from an onshore water treatment plant to an offshore island-sited nuclear power plant. The line runs vertically down in an open shaft to a depth of 120 ft (36.6 m) below grade. It then runs horizontally 100 ft (30.5 m) below the surface of a seawater strait that separates the two facilities. The discharge pressure of the pumping system that transfers the water is 350 psig (2415 kPa gage) at ambient temperature. The material is ASTM A106, Grade B, and the internal corrosion allowance is 0.065 in (1.7 mm). The line is coated to prevent external corrosion. At times, the line is shut down and drained for maintenance. Under these conditions it must withstand the external pressure exerted by the seawater, without collapse.

Determine the required wall thickness to safely contain the water at the internal design pressure, and verify that this thickness is adequate to withstand the external pressure. The design code is ASME B31.1.

Solution. The pipeline design will be developed initially for the internal pressure condition. It will then be checked for the external pressure.

The internal design pressure has two components: the pump discharge pressure and the static head due to the vertical run to 120 ft below grade. The head pressure is

$$\begin{aligned} P_h &= 62.4\,\frac{\text{lb}}{\text{ft}^3} \times \frac{1\ \text{ft}^2}{144\ \text{in}^2} \times 120\ \text{ft}\ (36.6\ \text{m}) \\ &= 52\ \text{psig}\ (360\ \text{kPa gage}) \end{aligned}$$

The internal design pressure is therefore 350 + 52 = 402 psig. The minimum wall thickness based upon this pressure is determined by using Eq. (B2.5):

$$t_m = \frac{PD_o}{2(SE + Py)} + A \tag{B2.5}$$

The values of the variables are

P = design pressure = 402 psig (2780 kPa gage)

D_o = outside diameter of pipe = 24 in (610 mm)

S = allowable stress = 15,000 psi (103.4 MPa)
(ASME B31.1, Table A.1 at −20°F (−29°C) to 650°F (343°C)

E = 1.0 seamless pipe

y = 0.4 ASME B31.1, Table 104.1.2(A)

A = 0.065 in (1.7 mm)

Substituting these values yields

$$\begin{aligned} t_m &= \frac{402 \times 24}{2(15{,}000 \times 1 + 402 \times 0.4)} + 0.065 \\ &= 0.318\ \text{in} + 0.065\ \text{in} \\ &= 0.383\ \text{in} \end{aligned}$$

The commercial wall thickness tolerance on ASTM A106 pipe is +0, −12½ percent; therefore the nominal wall thickness is determined by dividing the minimum wall thickness by 0.875.

$$t_{\text{nom}} = \frac{0.383}{0.875} = 0.438\ \text{in}\ (11.1\ \text{mm})$$

The next-larger standard pipe wall thickness for ASTM A106, per ASME B36.10M, is 0.500 in (12.7 mm). This nominal thickness is accepted preliminarily, and will be investigated for its adequacy to withstand the external pressure condition.

ASME B31.1, Paragraph 104.1.3, invokes the ASME Boiler and Pressure Code, Section VIII, Division 1, *Pressure Vessels*, Subsections UG-28 through UG-30,[27] for the external pressure design of straight pipe. This subsection provides a series of empirical procedures for the external pressure design of shells and tubes. They may be stiffened or unstiffened. The procedures rely on equations presented in UG-28 to UG-30, and a series of external pressure design charts given in ASME Section II, Part D, Subpart 3.[28]

This example problem is a basic case involving an unstiffened straight tube under external pressure, and simplifying assumptions have been made. The reader is encouraged to study Subsections UG-28 through UG-30 in their entirety, prior to attempting the solution of this class of design problems.

The nomenclature is

A = a geometric factor determined from ASME Section II, Part D, Subpart 3, Fig. G. It is used to enter the applicable material chart given in subpart 3. A simplified version of Fig. G, which is applicable to this sample problem, is shown in Fig. B2.4.

B = a factor determined from applicable material chart of ASME Section II, Part D, for maximum design metal temperature, psi. A simplified version of the material chart which is applicable to this sample problem is shown in Fig. B2.5.

D_o = outside diameter of cylindrical shell course or tube, in

L = total length of tube between tube sheets, or design length of vessel between lines of support*

P = external design pressure, psi

P_a = calculated value of maximum allowable external working pressure, for assumed value of t, psi

t = minimum required thickness of a cylindrical shell or tube

t_s = nominal thickness of a cylindrical shell or tube, in

Detailed Procedure. The following procedure applies to cylindrical shells or tubes whose diameter-to-thickness ratio D_o/t is greater than 10.

- For this example the minimum required wall thickness t is taken as the commercial minimum wall thickness, less the corrosion allowance.

$$\begin{aligned} t &= t_s \times (\text{tolerance factor}) - A \\ &= 0.500 \times 0.875 - 0.065 \\ &= 0.3725 \text{ in } (9.5 \text{ mm}) \end{aligned}$$

---

* See ASME Section VIII, UG-28(b).

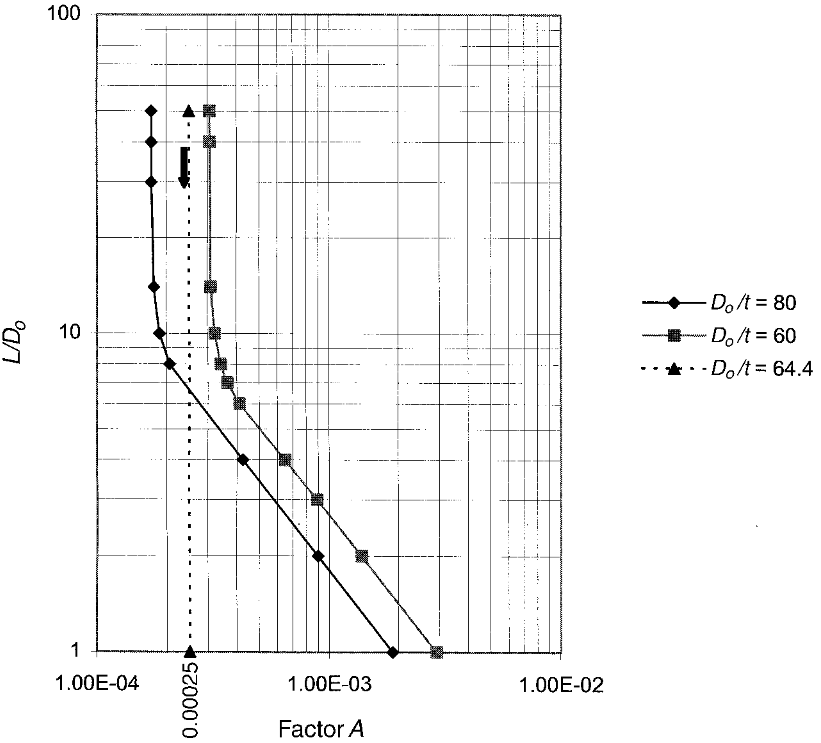

FIGURE B2.4 External pressure design factor A versus L/D_o. (*Adapted from ASME Section VIII, Division I,* Rules for the Construction of Pressure Vessels, *American Society of Mechanical Engineers, New York, 1998.*)

- For the assumed thickness t, determine the ratios L/D_o and D_o/t. If L/D_o is greater than 50, assume $L/D_o = 50$.

$$L/D_o = 50 \qquad L = \infty;\ \text{no tube supports}$$

$$D_o/t = 24.0/0.3725 = 64.4$$

- Using the values for L/D_o and D_o/t, proceed to Fig. B2.4 and determine the value of A. From Fig. B2.4, at $L/D_o = 50$ and $D_o/t = 64.4$, A equals 0.00025.
- Using the value of A found above, proceed to the material chart shown in Fig. B2.5 to determine the value of B. From Fig. B2.5, at the value of $A = 0.00025$; B equals 3600.
- Use the following formula to calculate the maximum allowable external working pressure which may act on the pipe:

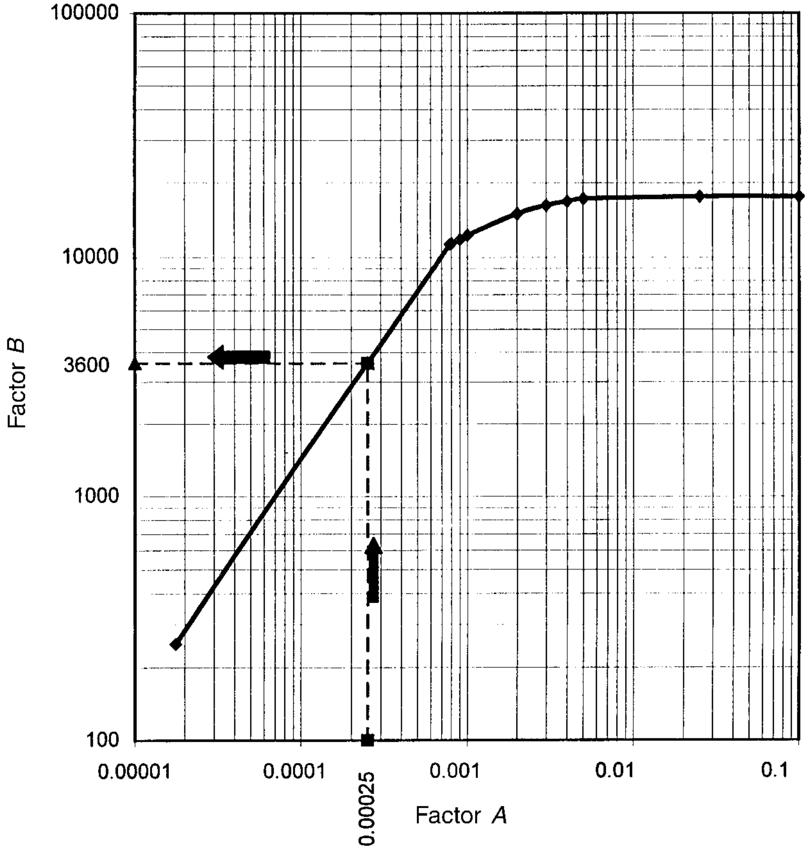

FIGURE B2.5 External pressure design factor A versus factor B. (*Adapted from ASME Section VIII, Division I,* Rules for the Construction of Pressure Vessels, *American Society of Mechanical Engineers, New York, 1998.*)

$$
\begin{aligned}
P_a &= \frac{4B}{3(D_o/t)} \\
&= \frac{4(3600)}{3(64.4)} \\
&= 74.5 \text{ psig } (514 \text{ kPa gage})
\end{aligned}
$$

This maximum allowable external working pressure must be compared with the actual external pressure due to the submergence in seawater, to determine whether the design is adequate.

The submergence depth is given as 100 ft, and the density of seawater is taken as 64.0 lb/ft^3. The seawater pressure P_{sw} acting on the outside of the pipe is

$$\begin{aligned} P_{sw} &= 64\frac{\text{lb}}{\text{ft}^3} \times \frac{1\ \text{ft}^2}{144\ \text{in}^2} \times 100\ \text{ft} \\ &= 44.4\ \text{psig (306 kPa gage)} \end{aligned}$$

Since the maximum allowable external working pressure for the pipe P_a exceeds the seawater pressure acting on the pipe P_{sw}, the design is acceptable.

REFERENCES

1. ASME B16.5–1996, *Pipe Flanges and Flanged Fittings NPS ½ Through NPS 24,* American Society of Mechanical Engineers, New York, 1997.
2. ASME Code for Pressure Piping, B31.1–1998, *Power Piping,* American Society of Mechanical Engineers, New York, 1998, Paragraph 102.2.4, p. 13.
3. Ibid., Paragraph 104.1.2, p. 18.
4. W.R. Burrows, R. Michel, and A.W. Rankin, "A Wall Thickness Formula for High-Pressure High-Temperature Piping," American Society of Mechanical Engineers, New York, 1952, Paper 52-A-151.
5. ASME Code for Pressure Piping, B31.3–1999, *Process Piping,* American Society of Mechanical Engineers, New York, 1999, Paragraph 304.1, eq. (3a), p. 20.
6. Ibid., eq. (3b), p. 20.
7. Ibid., eq. (2), p. 19.
8. ASME Boiler and Pressure Vessel Code, Section I, 1998, *Rules for Construction of Power Boilers,* American Society of Mechanical Engineers, New York, 1998, Subpart PG-22, p. 13.
9. ANSI/ASCE 7–95, *Minimum Design Loads for Buildings and Other Structures,* American Society of Civil Engineers, New York, 1996.
10. David W. Ludlum, *The American Weather Book,* Houghton Mifflin, Boston, 1982, p. 268.
11. Paul Tattelman and Irving I. Gringorten, "Estimated Glaze Ice and Wind Loads at the Earth's Surface for the Contiguous United States," Air Force Cambridge Research Laboratories, Bedford, MA, 1973, AFCRL-TR-73-0646.
12. Code of Federal Regulations, *Title 10—Energy, Part 50—Domestic Licensing of Production and Utilization Facilities,* Office of the Federal Register, Washington, DC, 1987, General Design Criterion No. 2.
13. *Standard Review Plan 3.2.1—Seismic Classification,* Revision 1, U.S. Nuclear Regulatory Commission, Office of Nuclear Reactor Regulation, Washington, DC, 1981.
14. *Regulatory Guide 1.29—Seismic Design Classification,* Revision 3, U.S. Nuclear Regulatory Commission, Washington, DC, 1978.
15. *Evaluation of Seismic Designs—A Review of Seismic Design Requirements for Nuclear Power Plant Piping,* vol. 2, U.S. Nuclear Regulatory Commission Piping Review Committee, Washington, DC, NUREG-1061, 1985.
16. *The Uniform Building Code—1985 Edition,* International Conference of Building Officials, Whittier, CA, 1985.
17. *The BOCA National Building Code/1987,* 10th ed., Building Officials and Code Administrators International, Inc., Country Club Hills, IL, 1986.
18. ASME Code for Pressure Piping, B31.1–1998, *Power Piping,* American Society of Mechanical Engineers, New York, 1998, Appendix II.

19. V.A. Carucci and R.T. Mueller, ‘‘Acoustically Induced Piping Vibration in High Capacity Pressure Reducing Systems,’’ American Society of Mechanical Engineers, New York, 82-WA/PVP-8, 1982.
20. *Steel Pipe—A Guide for Design and Installation* (M11), American Water Works Association, Denver, 1985.
21. G.A. Delp, J.D. Robison, and M.T. Sedlack, ‘‘Erosion/Corrosion in Nuclear Power Plant Steam Piping: Causes and Inspection Program Guidelines,’’ Electric Power Research Institute, Palo Alto, CA, 1985, NP-3944.
22. R. Jones, B. Chexel, M. Behravesh, and K. Stahlkopt, ‘‘Single Phase Erosion-Corrosion of Carbon Steel Piping,’’ Electric Power Research Institute, Palo Alto, CA, 1987.
23. ASME Boiler and Pressure Vessel Code, Section II, *Materials,* Part D—*Properties,* American Society of Mechanical Engineers, New York, 1998, Appendix 1, p. 691.
24. ASME Code for Pressure Piping, B31.1–1998, *Power Piping,* American Society of Mechanical Engineers, New York, 1998, Table A-1, note 2, p. 120.
25. ASME Code for Pressure Piping, B31.1–1998, *Power Piping,* American Society of Mechanical Engineers, New York, 1998, Paragraph 104.1.2, equation (3), p. 18.
26. ASME B16.34–1996, *Valves—Flanged, Threaded, and Welding End,* American Society of Mechanical Engineers, New York, 1997, Section 8.
27. ASME Boiler and Pressure Vessel Code, Section VIII, Division I, *Rules for Construction of Pressure Vessels,* American Society of Mechanical Engineers, New York, 1998, Subsections UG-28 through UG-30.
28. ASME Boiler and Pressure Vessel Code, Section II, *Materials,* Part D—*Properties,* American Society of Mechanical Engineers, New York, 1998, Subpart 3.

CHAPTER B3

PIPING LAYOUT

Lawrence D. Lynch
Bechtel Power Corporation
Frederick, Maryland

Charles A. Bullinger
Retired, Bechtel Power Corporation

A. B. Cleveland, Jr.
Jacobus Technology
Gaithersburg, MD

Piping is a major expenditure in the design and construction of industrial, refinery, petrochemical, or power-generating plants when one considers engineering costs, material costs, and fabrication and field labor costs. Proper planning and execution of the design and routing of pipe can have a major impact on controlling the total installed cost (TIC).

Piping design and equipment arrangement are interrelated subjects that cannot be well taught in the classroom. Most good designers throughout history have learned their profession by a combination of academic and practical work. Field and design office plus a little shop experience is good preparation for designing or teaching. This topic is very broad-based and relies on a sound mechanical engineering background and a lot of common sense. The use of previous designs and drawings is a good way to learn and improve on current designs.

The experienced piping designer needs to have a working knowledge of plant layout, equipment arrangement, and system functionality associated with one or more fields of endeavor, such as commercial, industrial, refinery, petrochemical, or power. In addition, the designer must have an understanding of the practical application of piping materials, valves, pumps, tanks, pressure vessels, heat exchangers, power boilers, vendor-supplied skid assemblies, steam turbine drivers, and other machinery and equipment.

CODES AND STANDARDS

The various codes and standards applicable to the engineering, design, and fabrication of piping systems are discussed and summarized in Chap. A4 of this handbook.

These codes and standards were written to establish minimum requirements for safe design and construction with very little reference to the physical routing of piping. However, the piping designer should be familiar with them as they apply to his or her work. There are a few specific references to physical piping design of safety relief valve arrangements:

- The ASME Boiler and Pressure Code, Section I, *Power Boilers,* specifies that there is to be no intervening pipe, valves, or fittings between the safety relief valves and the vessel or piping to which they are attached. This means that they must be fitting-bound.
- The ASME B31.1, *Power Piping Code,* Appendix II, Non-Mandatory Rules for the Design of Safety Valve Installation, provides guidelines for the physical arrangement of safety valve piping, the most significant being that the distance between the centerline of the valve and the centerline of the discharge elbow must not exceed 4 times the nominal pipe size of the relief valve outlet.

The Pipe Fabrication Institute has a series of engineering standards (ES) covering the fabrication, design, cleaning, and inspection of piping. Three of these standards, listed below, specifically relate to the physical piping design:

ES2, *Method of Dimensioning Welded Assemblies*
ES3, *Linear Tolerances, Bending Radii, Minimum Tangents*
ES7, *Minimum Length and Spacing for Welded Nozzles*

For piping and valve drawing symbols, refer to ANSI/ASME Y32.2.3, *Graphical Symbols for Piping Fittings, Valves and Piping*.

It is essential that designers read and understand applicable codes and standards prior to developing fabrication piping designs.

PIPING LAYOUT CONSIDERATIONS

Project Client and Owner Requirements

Most projects have project-specific requirements imposed by the owner. These usually include additional requirements above the codes and standards which may have direct impact on both pipe layout and equipment location. Most of these requirements derive from operations feedback which the owner contractually invokes on future projects. Owners may not have a thorough understanding of all the levels of detail required to produce a piping design, but they know the finished product. It is very important that all project personnel and designers know and understand these requirements.

Hierarchy of Reference Design Information

To commence the routing and design of any piping system, the designer is referred to Chap. B1, Hierarchy of Design Documents. In the ever-expanding electronic engineering environment, the documents identified can and will be replaced with databases, but the flow of required information to design the piping systems will remain the same.

System Piping and Instrumentation Diagrams (P&ID). These are the schematic single line process diagrams which define the sequence of equipment, valves, in-line components, pipeline sizes, and overall system arrangement required for proper system function. Computer-aided P&IDs that link the schematic diagrams to electronic design data are preferred in order to perform computerized P&ID compliance checks.

P&ID Implementation and Physicalization. Piping and instrumentation diagrams are the piping designer's roadmap for laying out piping systems. The designer should understand the P&ID and the specific system characteristics. With this knowledge the designer is required to develop the P&ID and arrange connections and branches as required to best suit the process to actual physical design.

Project Piping Specifications. These documents or databases define the following essential information: the system design and operating pressures and temperatures; piping materials; pipe wall thickness or schedules; types of fittings to be used, e.g., butt weld, socket weld, or screwed; and the valve and flange pressure rating and insulation requirements. In addition, the piping specification defines the fabrication, examination, testing, inspection, and installation requirements, including the requirements for seismic installations, where applicable.

Equipment Outlines. These documents can be either imported computer-aided design and drafting (CADD) files or prints of the equipment being piped. They include overall dimensions and the pipe size, wall thickness, flange pressure rating, and locating dimensions of all pipe nozzles and other connections.

General Arrangements or Equipment Location Drawings. These drawings will indicate the location of all major pieces of equipment in the plant which the designer will either verify or relocate, as required, to accommodate the physical pipe routing as designed or redesign the piping to accommodate the particular piece of equipment.

Generally equipment location drawings are developed by senior-level piping designers during the proposal preparation and are taken over by the project team upon award of the contract. From this point on they are revised and updated as part of the normal process of design development. Equipment should be arranged with the piping layout in mind. Equipment locations and relational arrangements should be evaluated during the piping layout design process. Adjustments and occasionally major changes to equipment arrangement are required to solve major piping arrangement problems. Piping system design is dependent on the input from numerous reference sources prior to the start of piping design.

Collection of As-Built Information

CADD and electronic surveying capabilities have changed and are continuously changing. Photogrametry (photographs that are input into three-dimensional CADD models) and laser mapping (laser scanning using a time of flight laser connected to a computer that translates the scanned points to a three-dimensional CADD model) are applications that enable the designer to collect existing conditions which can be imported into the designer's CADD files. Total Station Surveying is the computerized surveying system which engineering should request for the collection of survey data points with the electronic transfer of information being able to be translated directly into the CADD environment.

Piping Layout Considerations and Planning Studies for Improved Piping Economics

Proper planning is an important activity performed by the piping designer in the early stages of a project. Space conservation and a symmetric piping arrangement are achieved when all the systems are evaluated in the preliminary stages of design. This study will become the final design. It is important to consider the cost of the piping material at this time for the expensive lines. These lines should be kept as short as possible, while maintaining proper piping flexibility even if this requires changing the equipment arrangement.

Detailed design should not start until the planning studies are complete. Expending engineering work hours on details that are subject to change pending the completion of the planning study is not recommended.

Piping layout then becomes a matter of designing dimensioned routings from one point to another point with the branches, valves, piping specialties, and instrumentation as indicated on the P&ID. This statement, however, is an oversimplification of the process, since many other factors must be considered, such as interference, piping flexibility, material costs, pipe supports, operation and maintenance, and safety and construction requirements.

An example would be moving a pump 3 in (75 mm) to avoid a compound elbow offset in order to connect to the top discharge nozzle. Perhaps the equipment was arranged while planning on a side suction and discharge. Refer to Fig. B3.1.

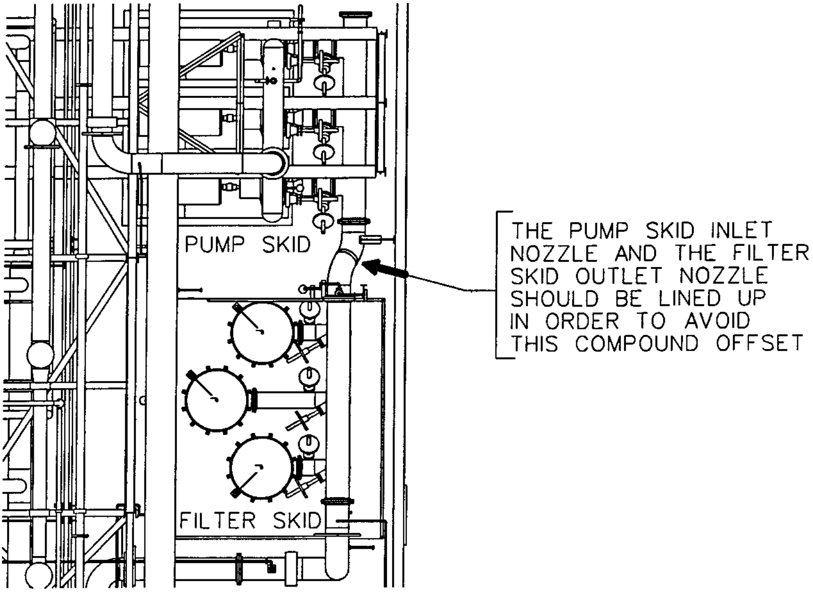

THE PUMP SKID INLET NOZZLE AND THE FILTER SKID OUTLET NOZZLE SHOULD BE LINED UP IN ORDER TO AVOID THIS COMPOUND OFFSET

FIGURE B3.1 Nozzle alignment drawing.

Pipe Bending

Pipe bending has become increasingly widespread due to a desire for a decrease in fabrication costs. If bending is to be used, the designer should consider special requirements imposed by the process (i.e., tail ends and clamp dimensions are required by the bending machine, and increased distances and space are required because bends have a greater center-to-face dimension than conventional fitting dimensions).

Interferences

One of the most important aspects of piping layout is the avoidance of interferences with other facilities in the plant such as other piping systems; structural steel and concrete; heating, ventilating, and air-conditioning (HVAC) ductwork; and electric cable trays and conduit. For engineering firms using 2D CADD (two-dimensional computer-aided design and drafting) or manual drafting and design, the search for interferences is very tedious and time-consuming since the designer must mentally and visually look for interferences between the systems currently being designed and previously designed or the existing system or facilities, not to mention those systems or facilities in design concurrently. This process is extremely complex at best. Traditionally, this has been accomplished by the use of area composite drawings (see Fig. B3.2) and plastic scale models.

The composite drawings and plastic models show all plant facilities designed to date and are used by the designers to select an interference-free route for the system currently under design; however, the designer still must search out those systems or facilities in design concurrently. Once the designer is satisfied that the current system layout is interference-free, it will be added to the area composite drawing and the plastic model.

An alternative to composite piping drawings and plastic models for interference detection is the use of computer-aided design (CAD). Specifically, three-dimensional (3D) computer modeling can provide an efficient, accurate, and cost-effective alternative to the traditional manual methods for interference detection. This and other CAD applications for piping layout are addressed in the section ''Application of Computer-Aided Design to Piping Layout.'' Refer to Fig. B3.3.

Piping Flexibility

The effects of the thermal expansion of pipe and fittings as a result of system operating temperature changes cannot be overlooked during the layout and routing of any piping system. The function of piping flexibility or stress analysis has, for the most part, been delegated to the computer particularly in the case of high-temperature, high-pressure piping systems. The piping stress analyst translates and enters the piping design data into the computer, reviews the output data, and if the system is too rigid, may suggest appropriate corrective redesigns. However, it is the piping designer's responsibility to ensure that the final stress analysis results are incorporated into the final pipe support and pipe routing design.

In the past, a computer stress analysis, including the development of input data and the interpretation of the output, could be expensive and time-consuming if numerous iterations of computer runs were needed to arrive at an acceptable system design. The experienced piping designer, with the knowledge and capability of

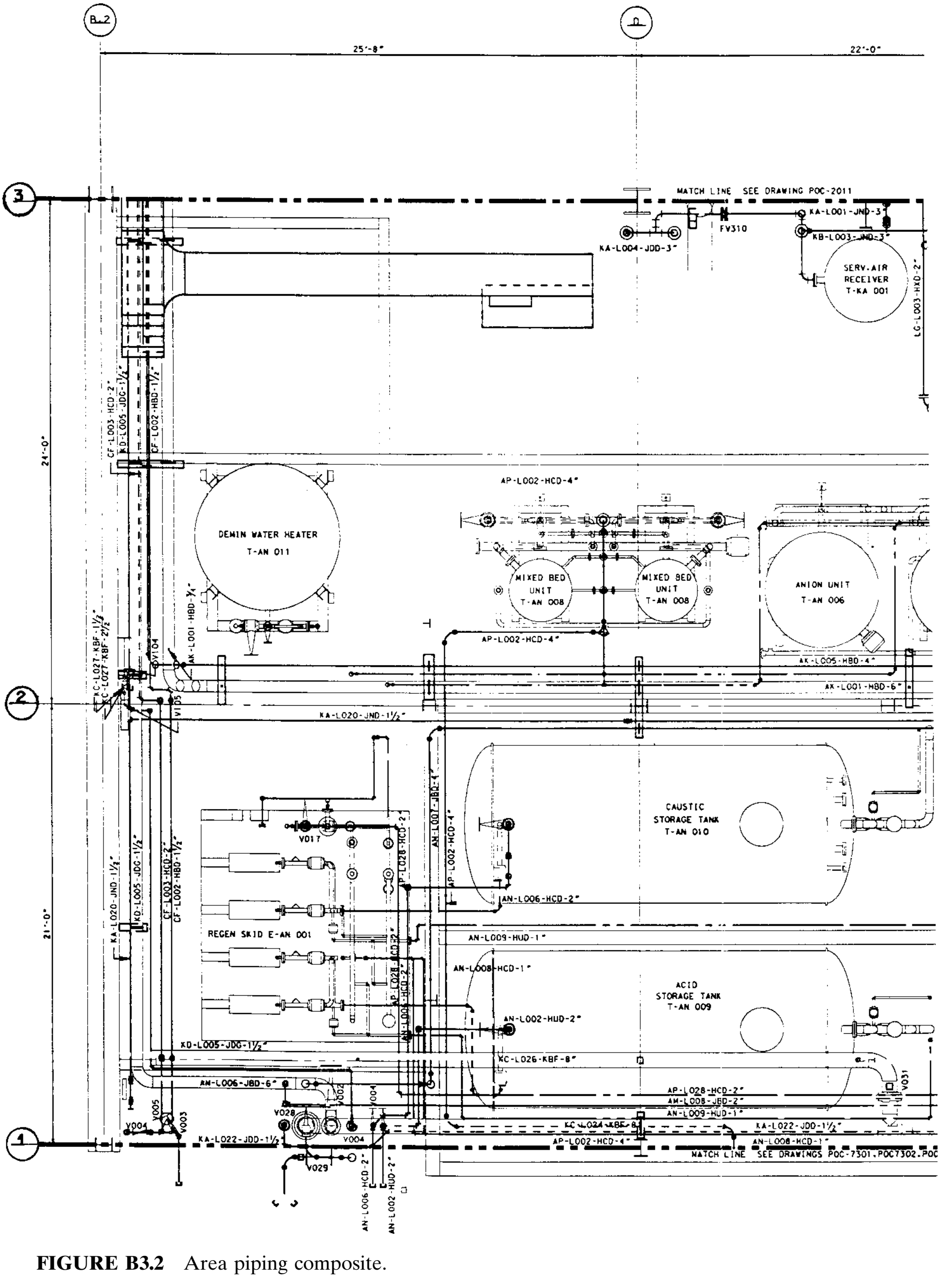
B.2
D
25'-8"
22'-0"
3
2
1
24'-0"
21'-0"
MATCH LINE SEE DRAWING POC-2011
KA-L001-JND-3"
KB-L003-JND-3"
KA-L004-JDD-3"
FV310
SERV. AIR
RECEIVER
T-KA 001
LG-L003-HXD-2"
CF-L003-HCD-2"
KD-L005-JDG-1½"
CF-L002-HBD-1½"
DEMIN WATER HEATER
T-AN 011
AP-L002-HCD-4"
MIXED BED
UNIT
T-AN 008
MIXED BED
UNIT
T-AN 008
ANION UNIT
T-AN 006
AK-L001-HBD-¾"
KC-L027-KBF-1½"
KC-L027-KBF-2½"
V104
V105
AP-L002-HCD-4"
AK-L005-HBD-4"
AK-L001-HBD-6"
KA-L020-JND-1½"
AN-L007-JBD-4"
AP-L002-HCD-4"
CAUSTIC
STORAGE TANK
T-AN 010
V017
AP-L028-HCD-2"
AN-L006-HCD-2"
KA-L020-JND-1½"
KD-L005-JDG-1½"
CF-L003-HCD-2"
CF-L002-HBD-1½"
REGEN SKID E-AN 001
AN-L009-HUD-1"
AN-L008-HCD-1"
ACID
STORAGE TANK
T-AN 009
AP-L028-HCD-2"
AN-L006-HCD-2"
AN-L002-HUD-2"
KD-L005-JDG-1½"
KC-L026-KBF-8"
AN-L006-JBD-6"
V002
V004
V028
V005
V004
V003
V004
V031
AP-L028-HCD-2"
AN-L008-JBD-2"
AN-L009-HUD-1"
KC-L024-KBF-8"
KA-L022-JDD-1½"
KA-L022-JDD-1½"
AP-L002-HCD-4"
AN-L008-HCD-1"
MATCH LINE SEE DRAWINGS POC-7301, POC7302, POC
V029
AN-L006-HCD-2"
AN-L002-HUD-2"

FIGURE B3.2 Area piping composite.

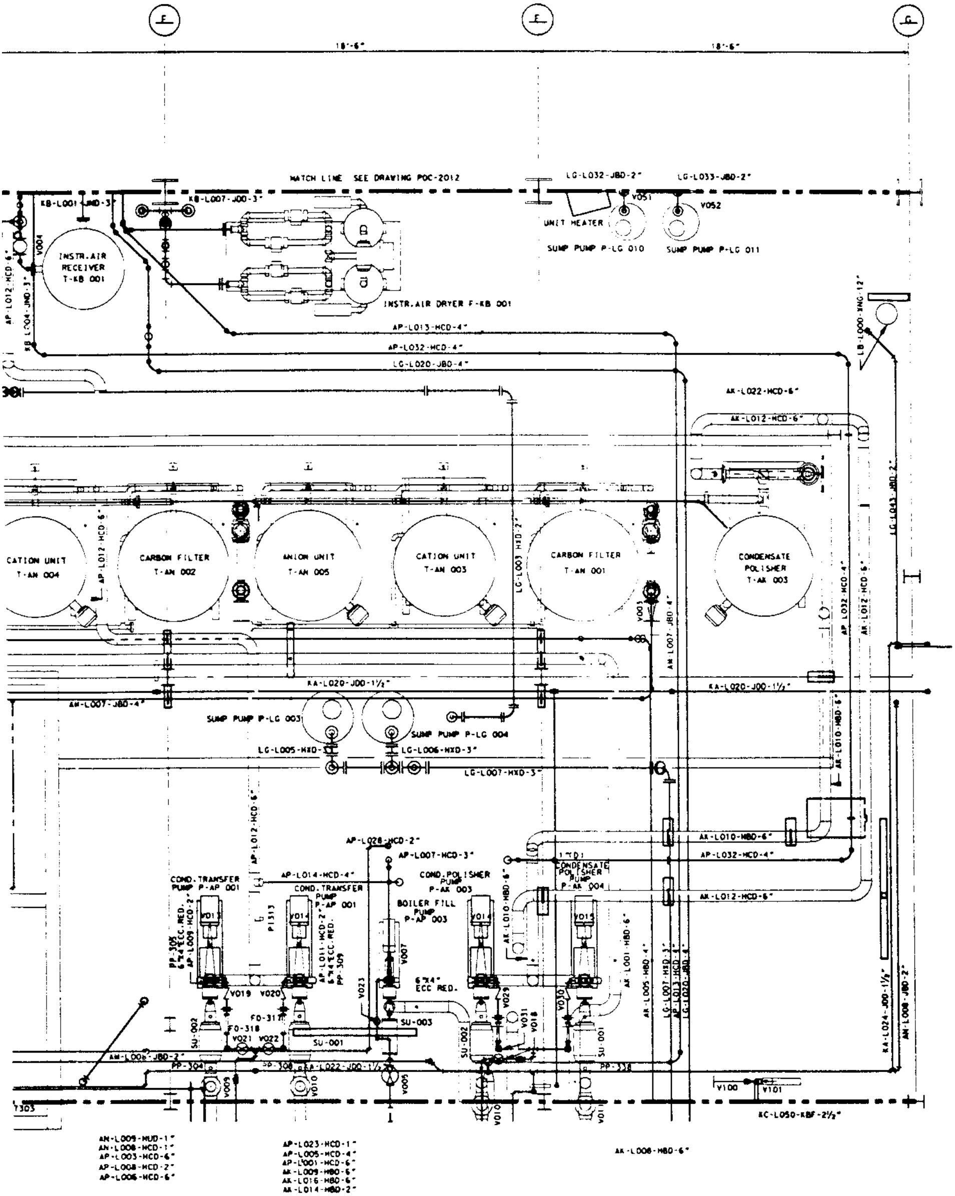
18'-6"
18'-6"
MATCH LINE SEE DRAWING POC-2012
LG-L032-JBD-2"
LG-L033-JBD-2"
KB-L001-JND-3"
KB-L007-JDD-3"
V051
V052
UNIT HEATER
SUMP PUMP P-LG 010
SUMP PUMP P-LG 011
INSTR. AIR RECEIVER T-KB 001
V004
AP-L012-HCD-6"
KB-L004-JND-3"
INSTR. AIR DRYER F-KB 001
AP-L013-HCD-4"
AP-L032-HCD-4"
LG-L020-JBD-4"
LB-L000-XNG-12"
AK-L022-HCD-6"
AK-L012-HCD-6"
LG-L043-JBD-2"
CATION UNIT T-AN 004
CARBON FILTER T-AN 002
ANION UNIT T-AN 005
CATION UNIT T-AN 003
CARBON FILTER T-AN 001
CONDENSATE POLISHER T-AK 003
LG-L003-HXD-2"
V001
AN-L007-JBD-4"
AP-L032-HCD-4"
AK-L012-HCD-6"
KA-L020-JDD-1½"
KA-L020-JDD-1½"
AN-L007-JBD-4"
SUMP PUMP P-LG 003
SUMP PUMP P-LG 004
LG-L005-HXD-3"
LG-L006-HXD-3"
LG-L007-HXD-3"
AK-L010-HBD-6"
AP-L012-HCD-6"
AP-L028-HCD-2"
AP-L007-HCD-3"
AK-L010-HBD-6"
AP-L032-HCD-4"
AK-L012-HCD-6"
AP-L014-HCD-4"
COND. TRANSFER PUMP P-AP 001
COND. TRANSFER PUMP P-AP 001
COND. POLISHER PUMP P-AK 003
BOILER FILL PUMP P-AP 003
CONDENSATE POLISHER PUMP P-AK 004
PI 313
V013
V014
V014
V015
PP-305
6"×4" ECC. RED.
AP-L009-HCD-2"
AP-L011-HCD-2"
6"×4" ECC. RED.
PP-309
V007
6"×4" ECC RED.
AK-L010-HBD-6"
AK-L001-HBD-6"
AK-L005-HBD-4"
LG-L007-HXD-3"
AP-L013-HCD-3"
LG-L020-JBD-4"
KA-L024-JDD-1½"
AN-L008-JBD-2"
V019
V020
V023
V029
V030
V031
V018
FD-317
FD-318
V021
V022
SU-002
SU-001
SU-003
SU-002
SU-001
AN-L006-JBD-2"
PP-304
PP-308
KA-L022-JDD-1½"
PP-338
V009
V010
V005
V010
V011
V100
V101
T303
KC-L050-KBF-2½"
AN-L009-HUD-1"
AN-L008-HCD-1"
AP-L003-HCD-6"
AP-L008-HCD-2"
AP-L006-HCD-6"
AP-L023-HCD-1"
AP-L005-HCD-4"
AP-L001-HCD-6"
AK-L009-HBD-6"
AK-L016-HBD-6"
AK-L014-HBD-2"
AK-L008-HBD-6"

FIGURE B3.2 *(Continued)* Area piping composite.

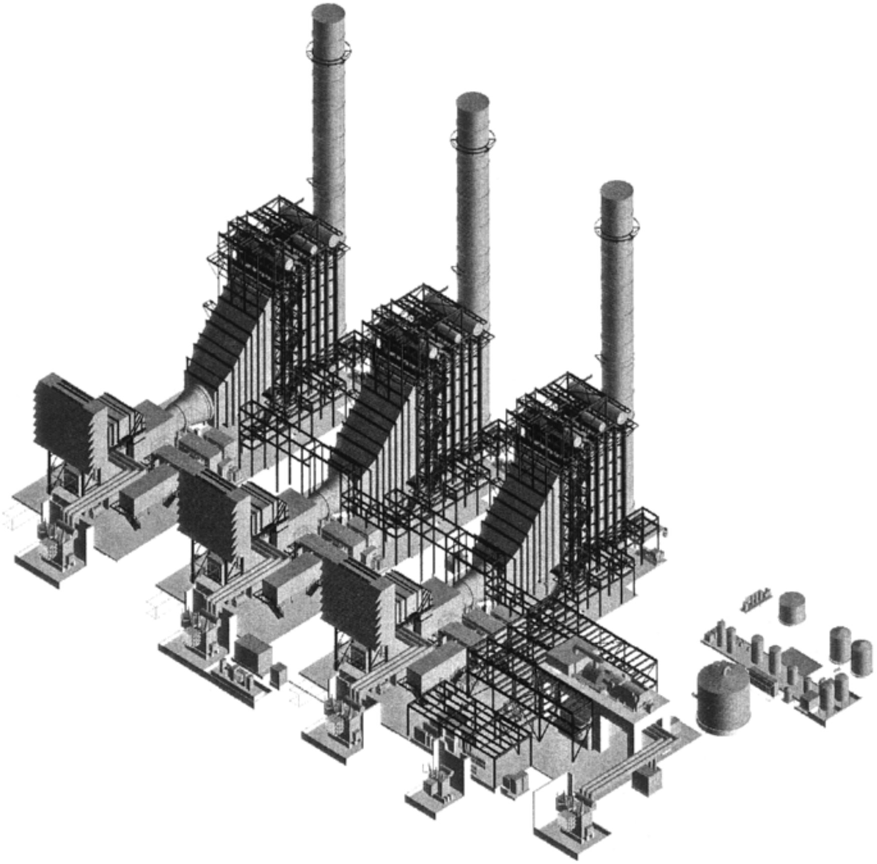

FIGURE B3.3 A 3D CAD model used for interferences, equipment layout, and pipe routing.

designing piping systems that are inherently flexible, was relied on to keep the number of computer iterations to a minimum. Today, this is much less of a problem with the advent of the personal computer and many computer programs for calculating stresses in piping systems due to thermal expansion and other static and dynamic loads. However, the piping designer must integrate piping flexibility considerations into the piping layout.

The piping designer should route piping with flexibility designed into it, using the minimum amount of pipe, fittings, and expansion loops by considering the following:

- Avoid the use of a straight run of pipe between two pieces of equipment or between two anchor points.
- A piping system between two anchor points in a single plane should, as a minimum, be L-shaped, consisting of two runs of pipe and a single elbow. This type of arrangement should be subjected to a ''quick-check'' analysis to determine if a formal computer stress analysis is required. A preferred solution in this case may be a series of two or more L-shaped runs of pipe.

- A piping system between two anchor points with the piping in two planes may consist of two L-shaped runs of pipe, e.g., one L-shaped run in the horizontal plane and another in the vertical plane. This arrangement should also be subjected to a quick-check analysis.
- A three-plane configuration may consist of a series of L-shaped runs and/or U-shaped expansion loops designed into the normal routing of the system.
- When the expected thermal expansion in any given run of pipe is high, consider the use of an anchor at or near the center of the run, thereby distributing the expansion in two directions.
- For systems consisting of a large-diameter main and numerous smaller branch lines, the designer must ascertain that the branches are flexible enough to withstand the expansion in the main header.
- Systems which are to be purged by steam or hot gas must be reviewed to ensure that they will be flexible during the purging operation.
- System or equipment bypass lines may be cold due to lack of flow while the main runs are at operating design temperature, resulting in excessive stresses.
- Temperatures during initial start-up and testing are often greater than those at operating conditions.
- Closed relief valve and hot blowdown systems should be given special attention due to rapid transients in temperature.

In addition, the piping designer may use a variety of single- and multiplane piping arrangements, such as the L-shaped, the U-shaped, and the Z-shaped configurations, in the normal routing of any system, as shown in Figs. B3.4 through B3.9.

Chapter B4, Stress Analysis of Piping Systems, discusses in detail pipe stress analysis including quick-check methods that may be used by the piping designer to determine whether the system is flexible enough and to determine if a more rigorous analysis is required.

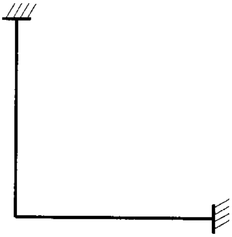

FIGURES B3.4

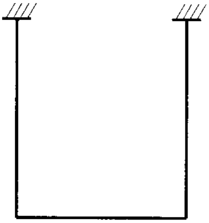

FIGURE B3.5

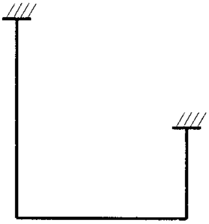

FIGURE B3.6

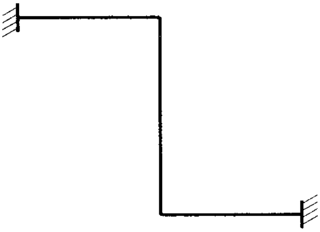

FIGURE B3.7

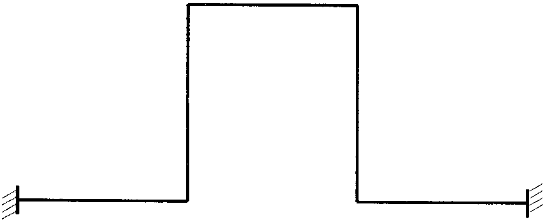

FIGURE B3.8

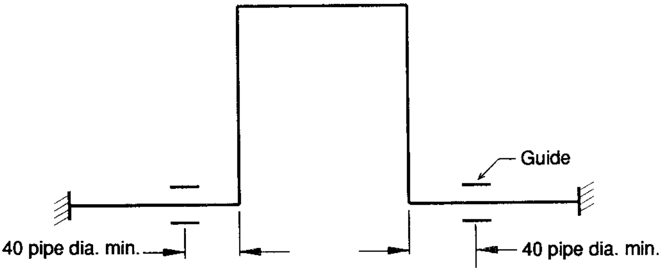

Guide
40 pipe dia. min.
40 pipe dia. min.

FIGURE B3.9

Valves

The piping designer must be familiar with proper application of all types of valves including gate, globe, plug, butterfly, ball, angle, diaphragm, check, pressure relief, and control valves and their methods of operation including manual, chain, gear, air, hydraulic, or motor. The following general guidelines should be applied when locating valves in any piping system:

- Valves should be installed with the stems between the vertically upward and horizontal positions with particular attention given to avoiding head and knee knockers, tripping hazards, and valve stems in the horizontal plane at eye level that may be a safety hazard. Large motor-operated valves should be installed in the vertical upright position where possible to facilitate support and maintenance.
- Valves in acid and caustic services should be located below the plant operator's eye level or in such a manner as to not present a safety hazard.
- The location of valves, with consideration for operating accessibility, should be accomplished in the natural routing of the system from point to point, avoiding the use of vertical loops and pockets.
- Valves in overhead piping with their stems in the horizontal position should be located such that the bottom of the handwheel is not more than 6.5 ft (2 m) above the floor or platform. Only infrequently operated valves should be located above this elevation, and then the designer should consider the use of a chain operator or a platform for access.
- Where chain operators are used, the valves should be located such that the chain does not present a safety hazard to the operating personnel.
- A minimum of 4 in (100 mm) of knuckle clearance should be provided around all valve handwheels.
- Valves should not be installed upside down.
- Space should be provided for the removal of all valve internals.

Improper application and placement of valves in the piping system can be detrimental to system function. This can result in malfunction of the valve and in waterhammer, and this can cause the valves to literally self-destruct. What follows are some specific recommendations and methods of avoiding these problems for some specific types of valves.

Control Valves. All control valve stations should be designed with the valve stem in the vertical upright position and a minimum of three diameters of straight pipe both upstream and downstream of the control valve, in order to reduce the turbulence entering and leaving the valve and to provide space for removal of the flange studs or bolts. Where applicable, this straight pipe will include the usual reduction in pipe size required to match the control valve size. Space must be provided for flange stud bolt removal where control valve bodies are designed for through-bolt installation.

Butterfly Valves. Butterfly valves should be provided with a minimum of five diameters of straight pipe upstream of the valve; and if this requirement has been met, the valve stem and operator may be oriented in the position best suited for operation and maintenance. When a butterfly valve is preceded by an elbow and this straight-pipe requirement cannot be met, the valve stem must be oriented in the same plane as the elbow. That is, if the elbow is in the vertical plane, the valve stem must also be in the vertical plane. This recommendation is based on the fact that the velocity profile of the discharge of an elbow is not symmetric. The result can be fluid dynamic torque that is twice the magnitude of that found for a valve with a straight run of pipe upstream. The resultant eccentric forces applied to valve disk produces excessive vibration and disk flutter which eventually may completely destroy the valve.

Check Valves. The preferred installation of any check valve is in a horizontal, continuously flooded run of pipe with cap up; however, swing check valves will function properly in vertical runs of pipe with the flow up. However, the velocity and the rate of flow must be adequate to move the valve disk away from the seat and to maintain the valve in the open position, as required.

Experience has indicated that check valves are highly susceptible to chattering due to upstream turbulence caused by elbows and branches. Therefore the designer should provide upstream straight pipe in accordance with the valve manufacturer's recommendations. However, where this information is not available, the preliminary design should include a minimum of five diameters of straight pipe upstream of all check valves. In addition, the designer should be aware that this requirement can be as much as 10 diameters of straight pipe depending on the type of valve and the manufacturer.

Safety Relief Valves. The arrangement for installation of safety and relief valves is very critical and involves the actual location of the valve itself, the design of the vent stack, and the design of any associated drain piping. The designer should adhere to the valve manufacturer's recommendations and the following guidelines; however, these guidelines relate to the power industry and may be used elsewhere, as applicable.

Valve Location

- All relief valves must be in the vertical upright position and fitting-bound to the top of a horizontal run of pipe, the pressure source, and must not be located less than one nominal header diameter from any butt weld.
- A safety valve inlet connection in a high-velocity steam line should be located at least 8 to 10 nominal header diameters downstream of any bend in the header, to minimize the possibility of acoustically induced vibrations. In addition, it should be at least 8 to 10 nominal header diameters either upstream or downstream of any diverging or converging T or Y fitting.
- No other header branch penetration, for any purpose, should be made in the same circumferential cross section containing the safety valve inlet nozzle.
- Where more than one safety valve or a service branch is to be installed in the same header run, a minimum distance of 24 in (600 mm) or 3 times the sum of the nozzle inside radii, whichever is greater, shall be provided between the nozzles.
- Where more than two safety valves are located in the same header run, the spacing between valves should be varied such that the distance between two adjacent valves differs by at least an inlet nozzle diameter.

Open Discharge. Open-discharge safety valve installations (see Fig. B3.10) should be in accordance with the following guidelines:

- Open-vent stack diameters shall be the calculated minimum flow diameter required for discharge venting without blowback, except as required to accommo-

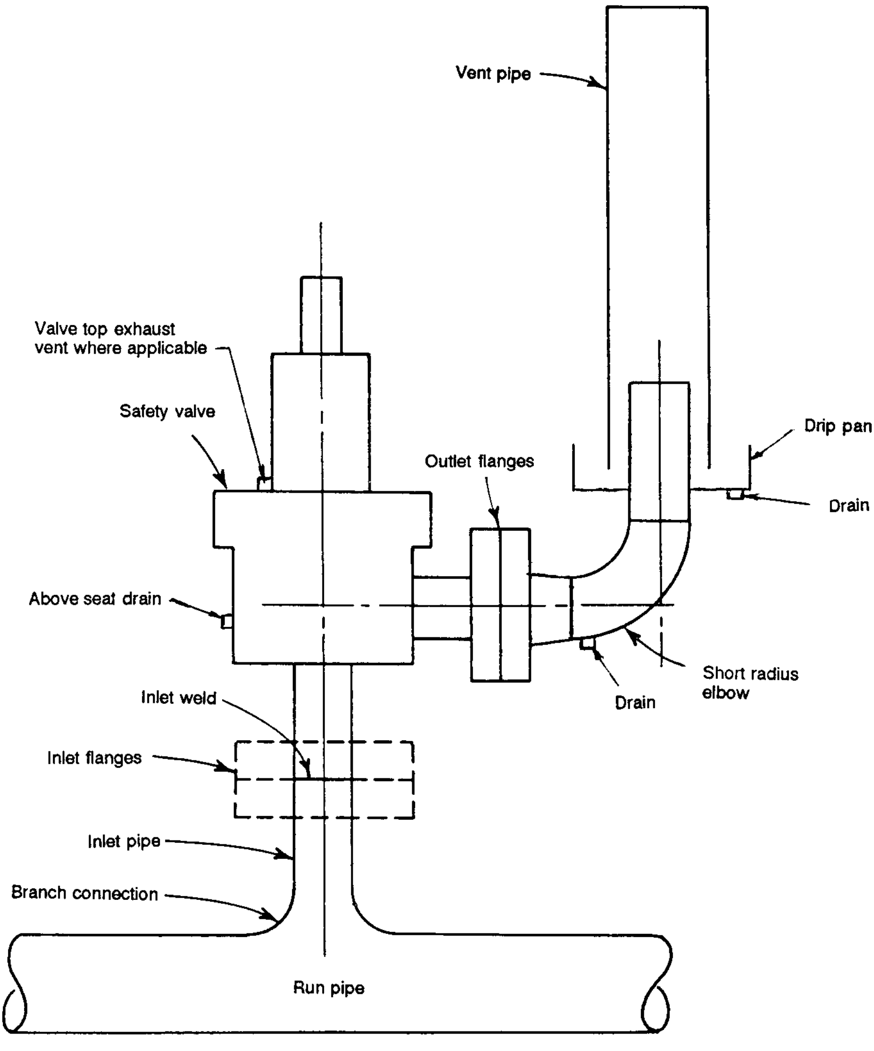
Vent pipe
Valve top exhaust vent where applicable
Safety valve
Outlet flanges
Drip pan
Drain
Above seat drain
Short radius elbow
Drain
Inlet weld
Inlet flanges
Inlet pipe
Branch connection
Run pipe

FIGURE B3.10 Open-discharge safety valve.

date the movement of the relief valve discharge from the cold to hot position such that the outlet pipe will be centered in the vent stack in the hot position. See Fig. B3.10.

- The vent stack entry diameter shall be maintained throughout the length of the vent stack; enlarged entry spools, later reduced in size to the calculated minimum flow diameter, are not acceptable.
- The relief valve outlet shall consist of the mating flange and a fitting-bound short-radius elbow, in order to minimize the moment and forces imposed on the valve body.

- Vent stacks should be routed, where possible, to provide a straight stack of minimum length. Where offsets or changes in direction are unavoidable, it is desirable to limit the change in direction to 30° or less; however, it could be more. The vent stack should terminate a minimum of 7 ft (2.2 m) or higher above the roof level.

Closed Discharge. Closed-discharge piping systems (see Fig. B3.11) are those piped continuously from the valve discharge flange to a closed receiver, such as a

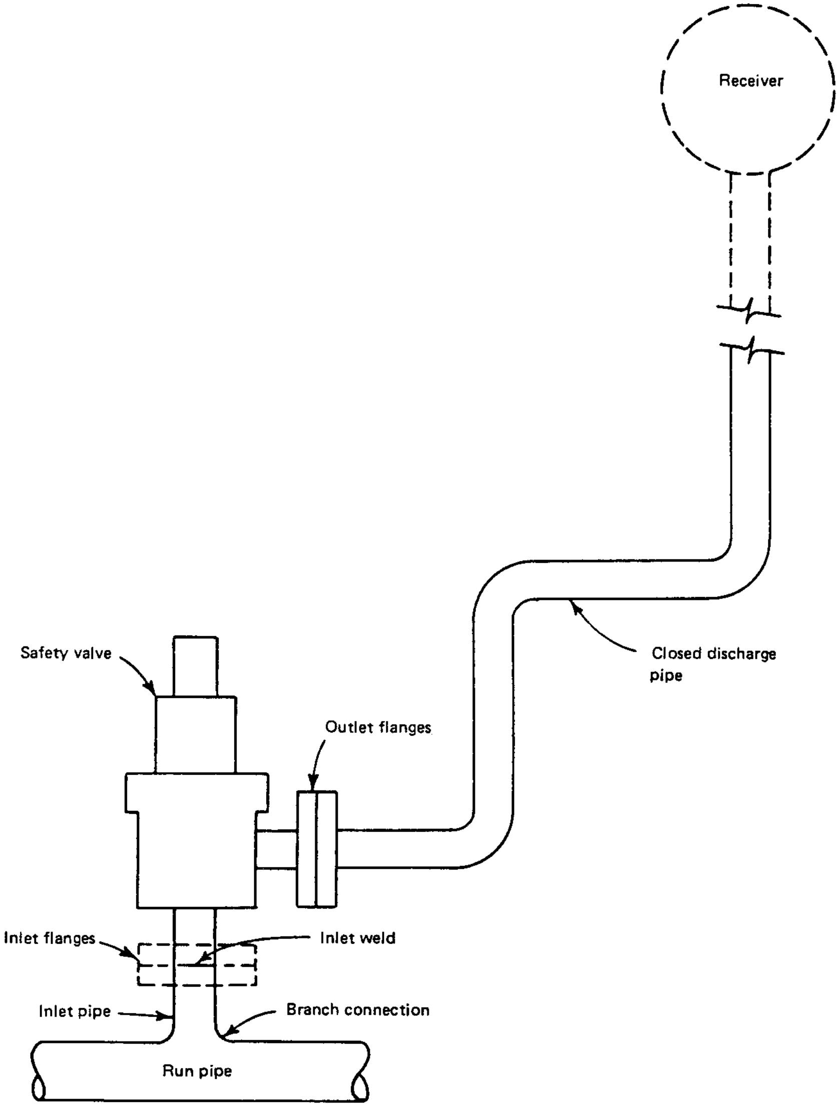
Receiver
Safety valve
Closed discharge pipe
Outlet flanges
Inlet flanges
Inlet weld
Inlet pipe
Branch connection
Run pipe

FIGURE B3.11 Closed-discharge safety valve.

condenser or blow-off tank. This type of system is required for feedwater heater shell side relief valves to provide protection against the effects of tube rupture, and may be used in other applications. Other than the normal considerations for designing pipe, there are no specific guidelines for the design of closed systems.

Drains. Relief valve and open-vent stack drains are important, in varying degrees, as discussed in the following:

- The discharge elbow and above seat body drain points are the most critical for safe valve operation. These drains should be collected into a common, closed drainage system and routed to a point where the drain can safely blow to atmosphere. This system must be sloped continuously downward and stress-analyzed to ensure that no strain is imposed on the valve body.
- Some relief valves now incorporate a relatively large valve top vent connection that is pressurized when the valve blows. This connection may be piped into the combined discharge elbow and valve body drain system and continued, at full-vent pipe size, to the point of the drain discharge.
- The open-discharge vent stack drip pan drain connection is of the least importance and is only intended to carry away any rainfall entering the stack and the residual condensate from the stack following a steam blow.

Piping of Centrifugal Pumps

The piping of centrifugal pumps, particularly the suction piping, can seriously affect the operating efficiency and life expectancy of the pump. Poorly designed suction piping can result in the entrainment of air or vapor into the pump and cause cavitation, which displaces liquid from within the pump casing, results in vibrations, and throws the pump out of balance. The cavitation alone can result in severe erosion of the impeller. The out-of-balance condition may result in a slight eccentric shaft rotation, which will eventually wear out the pump bearings and seals, requiring a pump shutdown for overhaul. When routing piping at pumps, the designer should follow the manufacturer's recommendations, the Hydraulic Institute Standards, and the following guidelines:

- The suction and discharge piping must be supported independently of the pump such that very little load is transmitted to the pump casing. The designer may consider the use of expansion joints on either the suction or discharge, or both, as necessary. However, expansion joints should be used only when it is unavoidable.
- The suction of any centrifugal pump must be continuously flooded, and the suction piping shall contain no vertical loops or air pockets.
- When a reduction in pipe size is required at the pump suction, provide an eccentric reducer flat side up. See Fig. B3.12.
- The suction side elbow in the piping at horizontal double suction pumps may be fitting-bound and in the vertical plane with the flow from either above or below the pump.
- When the suction piping is in the horizontal plane, provide a minimum of three to four diameters of straight pipe between the pump suction connection and the first elbow; the eccentric reducer noted above may be included in this straight section.
- Only long-radius elbows are to be used at or adjacent to any pump suction connection.

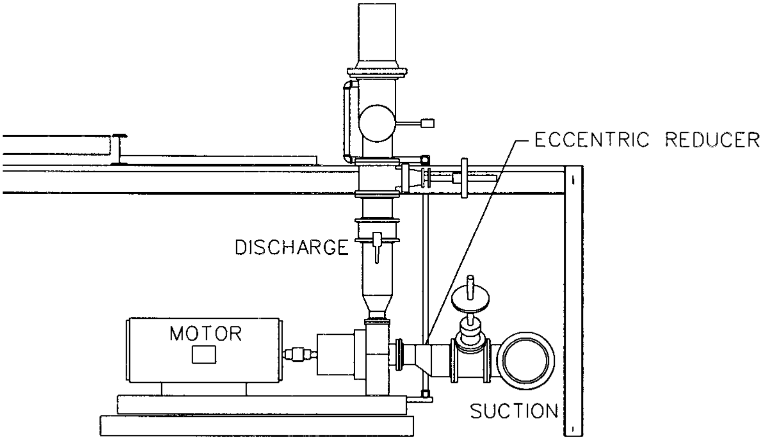

FIGURE B3.12 Pump suction reducer.

- All pump suction lines must be designed to accommodate a conical-type temporary strainer.
- A pipe anchor must be provided between any expansion joint or nonrigid coupling and the pump nozzle that it is designed to protect.
- When pump flanges are cast-iron flat-faced, the mating flanges must also be flat-faced and the joint made up with full-face gaskets and common steel bolts (ASTM A 307, Grade B), not high-strength bolts (ASTM A193, Grade B7).

Refer to the Hydraulic Institute Standards for arrangement of pump piping.

Vents and Drains

During the course of physical routing of any system, the designer should provide high-point vent and low-point drain connections for the following purposes:

- The filling of the piping system with water for hydrostatic testing and operation and the evacuation of entrapped air in the process
- The evacuation of all water used for hydrostatic testing and operation during periods of start-up and maintenance

High-point vents that will be used frequently should be piped down to an area where they can be accessed from the floor. When these vents are left out of reach, they tend not to be used. Systems subject to thermal expansion should be reviewed to ensure that they can be properly drained in both the hot and cold positions.

Buried Piping Systems

The economics of installing piping systems have proved that burying pipe in lieu of installing pipe aboveground provides a significant cost savings in both bulk footage and pipe supports. All system piping should be evaluated for underground installation if possible to decrease the TIC. Low-pressure and low-temperature systems such as for component cooling and demineralized water are good examples of piping that should be buried. Nonmetallic piping materials can be successfully used for buried applications in lieu of metallic piping, carbon steel, or stainless steel which need to be coated and wrapped to protect against galvanic corrosion, resulting in an expensive installation.

Pipe Racks

Pipe racks are structures designed and built specifically to support multiple pipes where adequate structure is not available. Pipe layout on pipe racks should follow the Pipe Planning Study concepts. Avoid designing one pipe at a time in order to avoid unnecessary overcrowding and fittings for pipes to enter and depart from the rack. Where possible, pipes should rest directly on the rack with the use of an insulation, if required. Steam piping should exit the rack with a vertical up-and-over to avoid condensate collection points, while water piping should exit the rack with a vertical down-and-under to avoid a high-point air pocket collection point.

Pipe Supports

Pipe supports require structural support, which means that piping should be located in close proximity to steel or concrete. Do not locate the pipe too close to the structure, so as to allow adequate space for the pipe support hardware to facilitate installation. Additionally the pipe insulation needs to be considered for clearances and insulation saddles. The most preferred location is either resting directly on structural steel for bottom support or using a single rod to the structure directly above the pipe.

The design and engineering of pipe support systems are covered in detail in Chap. B5; however, it is the responsibility of the piping designer to give serious consideration to the means of support during the piping layout, and in doing so, many pipe support problems may be either minimized or avoided altogether. For this reason, the piping designer should be familiar with the commercially available pipe support components and their application. Piping should be routed such that the support designer can make use of the surrounding structure to provide logical points of support, anchors, guides, or restraints, with ample space for the appropriate hardware. Banks of parallel pipelines at different elevations should be staggered horizontally and spaced sufficiently apart to permit independent pipe supports for each line. Piping on pipe racks should be routed using bottom-of-pipe (BOP) elevations. The piping designer should work closely with the structural engineer in the spacing of the pipe rack supports and the method of intermediate support to prevent pipe sagging.

Insulation

The engineering and selection of thermal insulation materials are covered in Chap. B7, and the piping designer should be familiar with these requirements and specifically with the thickness of insulation for any given system. In the location and spacing of piping systems, there must be clearance space between the insulation of one pipe and any adjacent pipe and/or other possible interference such as structural steel. The piping designer should also recognize that in some applications insulation may not be required for the prevention of heat loss but will be needed for personnel protection, and the spacing and clearances should be adjusted accordingly.

Heat Tracing

Heat tracing is required when there is concern that the pipe may be damaged due to freezing or that the line needs to maintain a temperature higher than ambient (i.e., caustic piping). The designer must provide the space and clearances for either electric or steam heat tracing and its outer insulation when routing the primary system pipe. The detail design requirements for these systems are covered in Chap. B6.

Operability, Maintenance, Safety, and Accessibility

Operability, maintenance, safety, and accessibility are interdependent, and certainly if any given piping component is accessible, it is also assumed to be operable and maintainable. However, maintenance may require additional space for dismantling the component, as noted elsewhere in this chapter. It is the responsibility of the piping designer to design a piping arrangement that satisfies all these (and other) requirements with the lowest total cost, i.e., resulting in the shortest pipe runs and the fewest fittings and pipe supports.

Operability, from the standpoint of operating personnel, means being able to perform daily functions in an efficient manner. This is done with consideration for the frequency of operation and the degree of physical effort required to perform it. The designer cannot make every valve and instrument ideally accessible, but will concentrate on those requiring the most frequent operation. Safety-related equipment and valves that are required to be operated during an emergency or to perform critical system functions must be accessible without exception. To ensure success, the designer, system engineer, and operating personnel work out the final arrangement. Sometimes input from construction, start-up, and vendor personnel is needed. Formerly in difficult cases, models or even full-size mock-ups have been used as design aids. Today the trend is toward virtual reality. Under today's conditions the whole process can be accelerated and, when done effectively, accomplished at lower cost than formerly. Additional considerations are discussed in other sections of this chapter. In general, an operable valve or instrument is one that can be readily reached when standing at grade or on an elevated floor or platform provided for that purpose. The position of the valve handwheel should be such that the force necessary to operate it can be applied without strain or undue contortions or interference from valves, lines, or other equipment. It is recognized that plant operating personnel will occasionally have to reach for a drain from a kneeling position or a vent valve from a ladder, but these are infrequent operations and as such can be tolerated.

Ease of maintenance actually begins with the development of the plant arrangement and equipment locations by providing sufficient space around each piece of equipment not only for the maintenance of the machinery alone but also for the pipe and the maintenance of the related components. These space allocations should include the pull spaces, laydown spaces, and rotor and tube removal spaces for the dismantling of all pieces of equipment. The engineering of the system P&IDs will indicate the need for maintenance facilities in the form of bypasses and block valves that would permit certain pieces of equipment or components to be worked on while the system is operating, or at least with a minimum of downtime. However, it is then up to the designer to design these facilities into the system and to provide the accessibility necessary to accomplish that maintenance, including the provision for any lifting gear such as cranes, davits, monorails, and hoists.

There are numerous national, state, and local codes and standards relating to safety, the most notable of which is the Occupational Safety and Health Act of 1970 (OSHA), which became law on April 28, 1971. Several thousand specific safety and health standards are being enforced under OSHA. These standards have been selected from the key safety standards developed by the American National Standards Institute (ANSI); the American Society of Mechanical Engineers (ASME); and the American Society for Testing and Materials (ASTM); and others, such as the American Water Works Association (AWWA), the American Petroleum Institute (API), and the National Fire Protection Association (NFPA).

Stairs, platforms, ladders, aisles, means-of-egress aisleways, and minimum headroom allowances designed in accordance with OSHA will provide a safe place to work. It is the responsibility of the piping designer to place equipment, valves, and other piping components in such positions that they do not create hazards. These hazards could include any piping components that presented themselves as ''head knockers,'' ''knee knockers,'' or trippers. The most common cause of these problems is valve stems, and common sense would say to place a valve in a horizontal run of pipe with the stem vertical, wherever possible. When this cannot be done, the designer should ascertain that the stem does not project into an access area and become a hazard. The designer should make every effort to keep such projections out of heights of 4½ to 6 ft (1.5 to 2 m), or specifically at face level. Steam system valves must not be placed at face level in the horizontal position since a packing gland leak may blow steam into the face of an operator; if this were a superheated steam leak, the vapor would not be visible. This same principle applies to hazardous and toxic fluids. However, this may be too restrictive, and it is not meant to rule out any perfectly safe arrangement of valves at face level if

- They are outside the limit of a platform.
- They are a part of a manifold of valves, all projecting about the same distance and with adequate access space in front of them.
- It is an isolated valve guarded by an adjacent pipe or structural steel.

Accessibility has already been discussed at length in terms of space and the normal platforms and stairways provided in any plant; however, the designer should review the layout and determine if there is a need for any platforms which access a remotely located valve or component.

Interfacing Disciplines and Organizations

Piping design requires coordination and cooperation with all interfacing disciplines including civil, electrical, instrumentation, and construction. Piping arrangements should blend with the layout design of interfacing disciplines. Pipes that require extensive support schemes in lieu of being conveniently located near structural support steel should be avoided. Pipes or electrical trays that twist and turn to avoid one another should be uniformly designed in a coordinated design effort which reduces congestion and reduces TIC. Most piping designs are not completed by a single designer or company, which makes the coordination between designers and different organizations critical. The best way to address this concern is to agree to specific divisions of responsibility in the planning phase of the project.

Electrical Tray and High-Temperature Piping Interfaces

High-temperature piping must not be located near electrical trays, wherever possible. This piping should cross over trays, not under them. The radiant heat could have an adverse effect on the cables. Electrical equipment maintenance space should be identified and accounted for in all piping passing near this equipment.

SPECIFIC SYSTEM CONSIDERATIONS

The power industry, through its many years of experience, has found that piping arrangements and layout can influence the functionality of a piping system. This section will present specific system guidelines and considerations that will enable the piping designer to minimize that influence.

Main Steam and Hot and Cold Reheat

In any power plant, be it a base-loaded electric power generation station or an industrial facility power plant, the main steam system is the backbone of the installation since it ties together the two most important and most costly pieces of equipment, the steam generator and the turbine, and is also usually the first system designed, giving it the preference in space allocation and routing. The recommendations of the following references should be incorporated in the design of the main steam and reheat steam piping systems.

1. ANSI/ASME TDP-1-1985, *Recommended Practices for the Prevention of Water Damage to Steam Turbines Used for Electric Power Generation (Fossil),* American Society of Mechanical Engineers, New York.
2. ANSI/ASME TDP-2-1985, *Recommended Practices for the Prevention of Water Damage to Steam Turbines Used for Electric Power Generation (Nuclear),* American Society of Mechanical Engineers, New York.

Adherence to the following guidelines will ensure that the system performs its intended function:

- All piping in this service should be sloped down a minimum of ⅛ in/ft (10 mm/m), in the direction of flow. Extensive evaluation and design are required for lines that do not slope in the direction of flow to ensure that condensate is collected and drained adequately.
- The final design of the main steam and hot reheat lines should be reviewed, with consideration for thermal growth, to determine the location of any necessary low-point drains and to ensure that the system can be completely drained in both the hot and cold conditions. When these lines are split into more than one branch into the turbine, each branch should be reviewed for low points. Provide a drain

connection in each branch as close as possible to the turbine stop valve. All drain lines and large valve drain ports should have an inside diameter of not less than 1 in (25 mm), to prevent plugging. Main steam piping drains should not be piped together with any other drains from the boiler. In addition, this review should ensure that no condensate can collect in any undrained portion of the system during shutdown.

- Provide a drain pot at the low point of each cold reheat line, which should be fabricated from NPS 6 (DN 150) or larger pipe and be no longer than required to install the level-sensing devices. Each pot should be provided with a minimum NPS 2 (DN 50) drain line and a full-sized, full-ported automatic power-operated drain valve. Each drain pot should be provided with a minimum of two level-sensing devices.
- Steam lines that are fitted with restricting devices such as orifices or flow nozzles should be adequately drained upstream of the device.
- Valves in all steam services should be installed with the valve stem in the vertical upright position to prevent the entrapment of fluid in the bonnet. Where this is not practical, the stem may be positioned between the vertical and horizontal positions, but in no case below horizontal.
- Main steam safety relief valves should be fitting-bound to the main steam headers.
- Sufficient space should be provided around any steam line to allow for insulation, pipe supports and anchors, thermal growth, machine welding, and maintenance repairs and replacements.

Turbine Extraction Steam

Most steam turbines are provided with one or more low- to intermediate-pressure steam extraction points either for boiler feedwater heating or for industrial process service and heating. These systems are extremely critical, particularly from the standpoint of water damage, and must be designed in accordance with the following standards and guidelines:

> ANSI/ASME TDP-1-1985, *Recommended Practices for the Prevention of Water Damage to Steam Turbines Used for Electric Power Generation (Fossil),* American Society of Mechanical Engineers, New York (Ref. 1).
>
> ANSI/ASME TDP-2-1985, *Recommended Practices for the Prevention of Water Damage to Steam Turbines Used for Electric Power Generation (Nuclear),* American Society of Mechanical Engineers, New York (Ref. 2).

- The routing should be as short and as direct as possible with consideration for thermal growth and piping flexibility.
- Extraction steam piping should be sloped down a minimum of ⅛ in/ft (10 mm/m), in the direction of flow. Extensive evaluation and design are required for lines that do not slope in the direction of flow to ensure that condensate is collected and drained adequately.
- Bleeder trip valves must be located as close to the turbine extraction point as possible, while at the same time keeping the total volume of the system within the turbine manufacturer's recommendations.

- When extraction steam piping is routed through the condenser neck, an expansion joint must be provided in each line and located at the turbine nozzle. The bleeder trip valves in these lines must be located just outside the condenser neck.
- A drain should be located at the low point in the extraction pipe between the turbine and block valve and routed separately to the condenser. A power-operated drain valve should be installed in this line that opens automatically upon the closure of the block valve in the extraction pipe.
- There should be no bypasses around the extraction line shutoff or nonreturn valves.
- Unavoidable vertical loops which create low points in the piping downstream of the bleeder trip valves must be provided with continuously drained drip pots.
- Provide a minimum of five diameters of straight pipe downstream of all bleeder trip valves.
- Provide maintenance access to all bleeder trip valves including any miscellaneous platforms, if needed.

Condensate

The condensate collection system from the condenser hotwell presents a unique set of parameters since we are dealing with water at slightly elevated temperatures and at a vacuum pressure. These conditions make the condensate pump suction piping susceptible to flashing and cavitation. The following guidelines apply to the design of condensate pump suction and discharge piping:

- Where two or more condensate pumps are used, the individual runs to each pump must be similar, and if a suction manifold or header is used, the individual pump suction lines from that manifold or header must be similar.
- When the manifold or header is larger than the pump suction size, the manifold or header should be made up of full-sized tees and eccentric reducers, flat side up.
- Each individual pump suction run should be sloped down a minimum of ⅛ in/ft (10 mm/m) toward the pump and be self-venting back to the condenser.
- Provide a minimum of three to four diameters of straight pipe in the pump suction line; in addition, these lines must be fitted with expansion joints and start-up strainers.
- The condensate pump discharge check valve must be located below the hotwell water level and be continuously flooded.
- The discharge header outlet should not be located between the pump discharge connections to the header, to avoid a counterflow condition.
- The condensate pump recirculation control valve should be located at the condenser nozzle.

Feedwater

The boiler feedwater pumps normally take suction from the deaerator storage tank, discharge to the feedwater heaters, and then supply the boiler. Here, too, the designer has to deal with the possibility of flashing fluid and must ensure that the deaerator storage tank is located at an elevation that will provide sufficient net positive suction head (NPSH) at the pump. The following guidelines apply to the design of this piping:

- The pump suction piping from the deaerator storage tank should drop vertically, avoiding any long horizontal runs of pipe. If short horizontal runs are unavoidable, they should be angled vertically down.
- A minimum of 3 diameters of straight pipe is required at the pump suction. The pump suction strainer may be located in this run of pipe.
- If a reducer is required at the pump suction, it must be eccentric and installed with the flat side up.
- The feed pump discharge swing check valves should be located in horizontal runs of pipe only.
- The feed pump recirculation line control valve should preferably be located at the deaerator storage tank. Horizontal runs are to be avoided in this line at the tank. If the control valve is located in a branch from the pump discharge, the line downstream of the valve must be continuously flooded.

Turbine Drains

This system consists of the turbine casing drains from the turbine to the condenser, a drain collection manifold at the condenser, or other drain vessel as indicated on the system P&ID. The designer should comply with the following standards and consider the guidelines listed below for the physical design of these drains:

> ANSI/ASME TDP-1-1985, *Recommended Practices for the Prevention of Water Damage to Steam Turbines Used for Electric Power Generation (Fossil),* American Society of Mechanical Engineers, New York (Ref. 1).
>
> ANSI/ASME TDP-2-1985, *Recommended Practices for the Prevention of Water Damage to Steam Turbines Used for Electric Power Generation (Nuclear),* American Society of Mechanical Engineers, New York (Ref. 2).

- Turbine drain lines and valve ports should be sized for the maximum amount of water to be handled under any operating condition, but in no case may they be less than NPS ¾ (DN 20).
- Drain lines should be designed for both hot and cold conditions and should slope continuously downward in the direction of flow. Flexibility loops, when required, should be in the plane of the slope or in vertical downward runs.
- Continuous drain orifices, when used, should be located and designed so that they may be cleaned frequently and will not be susceptible to plugging by debris.
- Steam traps are not satisfactory as the only means of draining critical lines; however, they may be used in parallel with automatically operated drain valves.
- No part of any drain line may be below its terminal point at the condenser, drain collection header, or other drain vessel.
- Only drain lines from piping systems of similar pressure may be routed to a common manifold.
- All drain and manifold connections to the condenser must be above the maximum hotwell water level.

- Drainage from other vessels, such as feedwater heaters, steam jet ejectors, and gland steam condensers, that drain water continuously must not be routed to turbine cycle drain manifolds.
- Drain lines should be connected at a 45° angle to the manifold axial centerline with the drain line discharge pointing toward the condenser. Drain line connections at the manifold should be arranged in descending order of pressure, with the highest-pressure source farthest from the manifold opening at the condenser.
- Drain connections to flash tanks must be above the maximum water level in the tank.
- Drains from the upstream and downstream sides of shutoff valves must not be interconnected.
- Drain lines in exposed areas should be protected from freezing.
- All turbine drain drawings must be reviewed and approved by the turbine supplier.

Heater Drains

The heater drains system consists of the feedwater heater drains from one heater to another at a lower pressure, to a drain tank, or to the dump line to the condenser. The designer should comply with the following standards and consider the guidelines listed below for the physical design of these drains:

> ANSI/ASME TDP-1-1985, *Recommended Practices for the Prevention of Water Damage to Steam Turbines Used for Electric Power Generation (Fossil),* American Society of Mechanical Engineers, New York (Ref. 1).
>
> ANSI/ASME TDP-2-1985, *Recommended Practices for the Prevention of Water Damage to Steam Turbines Used for Electric Power Generation (Nuclear),* American Society of Mechanical Engineers, New York (Ref. 2).

- Drain piping from feedwater heaters without an internal drains cooler must immediately drop vertically to provide as much static head as possible upstream of the heater level control valve. Thereafter any horizontal runs must be sloped down a minimum of ¼ in/ft (20 mm/m) in the direction of flow.
- Drain piping from feedwater heaters with an internal drain cooler may be routed horizontally without sloping upon leaving the heater.
- Heater level control valves should be located as close as possible to the receiving vessel, with consideration for ease of access and maintenance.
- The heater drain system arrangements must be coordinated with the system engineer for analysis to ensure that single-phase water flow is maintained upstream of the heater level control valves and to determine where downstream velocities may require tees and target plates in lieu of elbows for minimizing erosion.
- Heater drain dump lines should enter the condenser at approximately the horizontal centerline of the tube bundle. This location should be coordinated with the condenser manufacturer, who will provide the necessary baffle plates to prevent impingement on the condenser tubes.
- Only long-radius elbows should be used in heater drain piping.
- The use of reducers should be avoided, except at the control valves, which are generally smaller than the line size.

Compressed Air

The compressed-air systems provide service air and instrument air throughout the plant. The following guidelines apply to the design and layout of these systems:

- Refer to the compressor manufacturer's instruction manual for the recommended relative lengths of intake and discharge piping versus compressor revolutions per minute (rpm).
- The compressed-air system equipment arrangement and piping design should be such that the air receiver is the lowest point in the system and any condensate in the system will drain to the air receiver, particularly during periods of shutdown when large amounts of condensate can form. The point here is to preclude any possibility of condensates draining back to the air compressor, where it could cause extensive damage. The compressor discharge piping should be as short and direct as possible through the aftercooler and into the air receiver. The compressed-air system distribution lines and risers should originate from a separate outlet connection on the air receiver and should be sloped back to the air receiver.
- Compressed-air line header branches should have vertical risers and be drained at their terminations.
- Individual service branches should be taken off the top of the headers.

Floor and Equipment Drains

Floor and equipment drains in process plants are actually a process system and should be considered in the overall equipment layout design process. All equipment should be carefully evaluated for drain requirements, and a drain hub should be provided for pipes that produce continuous flow. The equipment drain system requires a thorough understanding of the equipment and system function because the drains are designed and issued for construction prior to receipt of finalized vendor information. Drain hubs should not be located more than 6 in (150 mm) away from the equipment pads, to prevent them from becoming tripping hazards.

Sump Locations and Pump Discharge

Piping and plant layout should always consider the sump locations as significant due to their impact on overall construction. Civil structural problems can occur when the sump size and location are not evaluated prior to determining a final sump location. Sump discharges should have a nonreturn valve to prevent the draining of the discharge piping. This is required to keep the discharge line solid and to avoid waterhammer.

Fire Protection

The fire protection system usually consists of two or more fire pumps taking suction from the fire water source with the discharge of each pump independently connected to the underground fire main and as widely separated as possible. The underground fire main loop shall completely encircle the plant and may serve multiple sites if cross-connected between units. The National Fire Protection Association codes and the following guidelines may be used to design and lay out the yard fire main loop:

- Locate the yard fire main such that all fire hydrants will be a minimum of 50 ft (15 m) from any building or structure whenever possible.
- The underground fire main shall be sectionalized in accordance with NFPA code using post indicator valves.
- Post indicator valves shall be provided on each side of any fire pump discharge connection into the fire main loop.
- All fire protection system branches from the yard fire main loop shall be provided with a shutoff valve located not less than 40 ft (12 m) from the building or structure being served.
- Two-way fire hydrants with individual curb boxes should be provided at 250- to 300-ft (75- to 90-m) intervals along the yard fire main loop.

Water fire-extinguishing systems within any building may consist of automatic sprinkler systems, spray systems, deluge systems, and hose stations, as determined by the project engineering group. The following guidelines shall apply to the design of these systems:

- Large areas, such as below the turbine operating floor, should be divided into sectors each served by an individual branch from the yard fire main loop.
- Each sector should be controlled by an exterior post indicator valve and an alarm check valve or automatic valve located inside the building.
- The maximum area served by any one alarm check valve or automatic sprinkler valve shall not exceed 25,000 ft^2 (7620 m^2).
- The maximum number of sprinkler heads in any sector shall not exceed 275.
- Provide automatic wet sprinkler systems in the area of the tube oil system below the turbine operating floor and in the ceiling of the clean and dirty tube oil storage tank room.
- Separate water spray systems should be provided in the area of the tube oil system, in addition to the wet sprinkler system noted above, and in the area of the hydrogen seal system.
- Standpipes and hose stations should be provided in accordance with the NFPA code as a complement to the automatic suppression systems noted above.
- The hose stations on any given floor should be fed from above to avoid creating a series of unvented high points.

Cooling Water Systems

There are several types of cooling water systems utilized today in the engineering and design of power generation, petrochemical, and industrial plants. The most common system in use for many years in power generation was the direct use of the water from the nearby river, bay, or ocean. In this system a water intake structure is located along the shoreline and includes as a minimum circulating water pump(s), piping, both fixed and traveling intake screens, and the necessary crane facilities for the removal, replacement, and maintenance of the pumps and their motors. The intake screens are provided to prevent fish, crabs, and other debris from entering and damaging the pumps. In addition to this main cooling water system, there may be one or more service water systems for other equipment throughout the plant. The following guidelines apply in the design and routing of these systems:

- Where butterfly valves are used, follow the guidelines provided for valves. Any given heat exchanger inlet and outlet valves should be located close together for balancing the system.
- Avoid unnecessary vertical loops in any closed cooling water system. This type of system will usually include an expansion tank, which should be located at or above the highest point in the system, and the outlet from this tank should be piped directly to the pump suction.
- For piping at centrifugal pumps, follow the guidelines provided for piping of centrifugal pumps.
- Consult the Hydraulic Institute standards and the pump manufacturer's guidelines for layout and arrangement of deep-well type of pumps.

Since the temperature in these systems is not high and does not vary widely, piping offsets to accommodate thermal expansion and/or contraction are not of paramount importance.

APPLICATION OF COMPUTER-AIDED DESIGN TO PIPING LAYOUT

The piping industry today is very diverse in its use of computer-aided design. This diversity is shown by the various levels of sophistication of the CAD applications in use by different segments of the industry. Even within the same company, the sophistication of CAD use can vary widely from discipline to discipline, department to department. This diversity ranges from a surprisingly large portion of the industry in which there is little use of CAD to a few who claim to be approaching a paperless office. Between these two extremes, most of the industry appears to be using CAD as computer-aided drafting. In this sense, CAD becomes an electronic pencil, not necessarily a design tool.

The meaning of the term *CAD* has evolved as quickly as the technology itself. From its original use as an acronym for computer-aided drafting, it has spawned a whole family of related acronyms: CADD (computer-aided drafting and design), CAE (computer-aided engineering), CAM (computer-aided manufacturing), and so on. Many of these terms have been applied when describing the design and layout of piping systems. In the minds of many people, CAD and its related acronyms are still envisioned as simply automated drafting, where CAD is basically the substitution of drawing boards with CAD terminals. While computer-aided drafting represents a significant portion of the application of CAD to piping layout, this is changing rapidly. In this section, applications beyond simple drafting will be discussed. Therefore the acronym *CAD* will mean *computer-aided design* and will refer to both design and drafting activities related to piping layout.

The entire field of design automation, including CAD, is changing so rapidly that it would be of little value to make recommendations regarding specific hardware and software systems. What may be the best or most cost-effective system today may be out of the picture tomorrow. However, there are some fundamental issues associated with the selection and implementation of a CAD system which should be considered, regardless of the specific supplier of hardware and software.

Computer-Aided Drafting

Currently, as indicated previously, the most significant use of CAD for piping layout is for drafting. Many software systems exist which can function on nearly every type of computer hardware available, including mainframe computers, minicomputers, workstations, and personal computers. Today, the use of CAD for two-dimensional drafting is dominated by CAD software for personal computers. In selecting a system for producing piping drawings, there are several issues which must be considered, regardless of the hardware to be used.

User-Definable Symbols and Menus. Any CAD software, if it is to be of long-term benefit, must provide the capability to define its own drafting symbols and menus (e.g., tablet, on-screen) for selecting these symbols. Since piping drawings make extensive use of symbology, defining symbols is of critical importance for significantly increasing drafting productivity. This capability allows the user organization to create and manage libraries of its own symbols, standard details, and standard notes, which can be easily and automatically included in any drawing.

Use of Standard Hardware. Traditionally, many CAD systems were provided by the vendor as a turnkey system that included both hardware and software. In these cases, the CAD software was designed to operate specifically on the hardware provided by the vendor. Today, however, many vendors have decoupled the hardware and software, which allows the software to run on a number of hardware platforms. In fact, most of the major providers of CAD software for drafting provide only software, with the users acquiring the hardware and operating system independently. This is particularly true for the personal-computer-based CAD systems. By selecting software which can function on a number of types of hardware, the user has the flexibility to more fully take advantage of rapid changes in the hardware market, i.e., decreasing prices with improved performance. If the CAD software can function only on the hardware from one specific vendor, then the user must rely on the hardware vendor to keep pace with the rest of the industry.

Availability of Third-Party Software. Certainly not every user can have the luxury of developing dedicated software, particularly beyond the development of symbol libraries and menus. Therefore, before selecting a CAD system, the user should determine how much application software is available from the vendor or from third parties. For piping layout, the most important applications to look for are those intended for generating orthographic piping drawings and piping isometric drawings. Application software, specific to piping layout, can significantly increase the productivity of the application of CAD. If little or no applications software exists for the CAD system under consideration, then the user will likely have to develop his or her own applications software or fail to realize the full value of the CAD system.

Support of User-Developed Software. In cases where no applications software exists, perhaps due to the uniqueness of the user requirements, the user needs to ensure that application software can be developed for the specific CAD system. As a minimum, the system should support developing simple ‘‘macro’’ commands which execute a series of commands in response to a single command. Many systems have macro languages which offer much of the functionality of general-purpose programming languages. For more sophisticated applications, the system should provide interfaces to software written in other programming languages, such as Fortran or C.

Support for Multiple Users. Piping layout is not done in isolation and must interface design information and drawings from other piping designers as well as other disciplines. Therefore, the CAD system must support this type of activity. The CAD system should provide the capability for a designer to have read-only access to the CAD files of other designers for reference, interference checking, or use as background information for the piping drawings. Systems which have this capability often refer to it as a *reference file* capability. This allows one designer to see the file of another designer, as if it were part of his or her file; however, the data cannot be changed. For personal-computer-based CAD systems, this requires that they be part of some type of local or wide-area network. Without this capability in the CAD software or for personal computers which are not in a network, the data from other designers must be copied and incorporated into the designer's file. This does not allow the designer to see the active data of other designers. In addition, it also greatly increases the storage requirements since many drawings are duplicated, perhaps numerous times. Most importantly, this introduces a more complicated file management problem, making it more difficult to (1) know which file has the most up-to-date information and (2) ensure that everyone references the current data.

Database Capabilities. To utilize the CAD system for more than just drafting requires that the system have the ability to create drawings which, in addition to the drawing graphics, contain (or reference in database) other information which can be extracted from the drawing, such as valve numbers and/or line numbers. With this type of capability, bills of material can be generated automatically from the piping drawings. It is even possible to generate the input to the piping stress analysis program from a piping isometric. However, note that merely having a basic database capability does not mean that it can be effectively used for extracting data from piping drawings. This is the role of applications software developed specifically for piping which automatically generates and manages this information during the creation of the drawing. In the absence of piping applications software, the designer would be required to key in a significant amount of data while generating the drawing. This not only dramatically decreases the productivity of the drawing production process, but also greatly increases the possibility of errors.

Training and Implementation. In the past, much of the cost of implementing the traditional turnkey CAD systems was in the hardware and software. Today, as the cost of hardware and software continues to decline, the majority of the cost is shifting from hardware and software toward training and support. Therefore, the costs associated with the training and implementation of a CAD system, even for two-dimensional drafting, should not be underestimated. In fact, experience has shown that the relative effectiveness of a CAD system is directly related to the amount of training and support the individual users receive.

The precise method of implementing a CAD system is dependent on the company's current organization and method of executing work. Centralized CAD groups working multiple shifts were often the norm with the installation of the large turnkey systems. Now, however, as the cost continues to decrease and the piping design industry in general increases its sophistication in the use of CAD, more effective uses of CAD are being made by placing the workstations right in the piping design groups. Many companies started by training their drafting personnel. But again, experience has shown that even more effective use can be made of the CAD system by training senior-level piping designers. Instead of creating sketches which are then passed on to a drafter, the designer, using the CAD system and piping layout applications software, can create an electronic sketch which is very nearly a finished drawing, leaving very little to do in the way of drafting. This approach can greatly increase the productivity of the whole design and drafting cycle.

Computer-Aided Design

While the use of CAD for two-dimensional drafting in support of piping layout can provide a number of productivity benefits, there are inherent limitations as to overall benefits to the entire design, fabrication, and construction cycle. While providing benefits in producing the piping drawings (e.g., drafting quality, drafting productivity) and possibly in generating bills of materials, it offers little in the way of improving design productivity. Also, the cost and effort required for interference detection are only marginally improved. Thus two-dimensional drafting, while improving drafting quality and productivity, does little for improving design quality and productivity.

The use of three-dimensional (3D) modeling offers a significant step forward in improving piping design productivity and quality. Systems for 3D piping modeling have existed since the 1970s in a variety of forms. The early systems were geared primarily toward interference detection and materials management and really were not used as design tools per se. Today, a number of systems exist which address the entire piping design cycle. In selecting one of these systems, all the issues which applied to computer-aided drafting apply to 3D piping design systems. However, there are a number of other issues which must also be considered.

Interactive Design. To truly improve piping design productivity, the software should provide the capability to interactively lay out the piping systems directly in the 3D computer model. This allows the piping designer to sit at the graphics workstation, viewing the 3D model, and directly add new piping or modify existing piping. Without this capability, the system can provide other benefits, such as in interference detection, but will not necessarily improve the piping design productivity. In fact, without interactive design capabilities, another step is added to the process for entering the data into the 3D model from the 2D design drawings. Many CAD systems provide interactive 3D modeling capabilities, but these are not usually sufficient for 3D piping design. Applications software, specifically aimed at piping design, is required to realize gains in design productivity. Without this type of applications software, 3D modeling is probably only effective for early conceptual design and perhaps detailed modeling of very specific problem areas.

Interference Detection. A major advantage of using 3D computer modeling for piping layout is the ability to automatically check for interferences. This alone can provide a significant improvement in design quality by making it possible to issue a ‘‘provable’’ design, i.e., an interference-free design. Many CAD systems, particularly those originally developed for mechanical design, can detect interferences between two 3D objects; but this is not sufficient for checking plant models for interferences in a production environment. As a minimum, the software should provide the following capabilities:

- The software should be able to check interferences for all or part of the plant in a batch mode. This check should include not only piping but all other disciplines as well. The software should have a method of reporting interferences which is easy to interpret and makes it possible to quickly locate the interferences in a large and complex model. Some systems also offer the capability to check for interferences as the piping is being designed. This is especially useful for designing pipe in very congested areas.

- The software should check for not only "hard" interferences, i.e., metal-to-metal, but also "soft" interferences, such as personnel access areas, equipment removal spaces, insulation, and construction access.
- The software should provide some capability for managing interference resolution over the life of the project. This includes the ability to suppress certain types of interferences and flagging certain specific interferences as acceptable which will not be reported in the future.

Drawing Generation. To fully realize the benefits of 3D modeling, the system should provide the capability to automatically or semiautomatically produce the piping drawings, both orthographic and isometric, directly from the 3D piping model. These drawings should be generated in the form of 2D CAD drawings so that they can be managed along with the 2D drawings not generated from the 3D model. For orthographic drawings, the system should be able to represent the piping in the format required by the user, e.g., single-line; it should be able to automatically remove hidden lines from the model; and it should have some basic capability to automatically place annotation, such as component callouts, into the drawing. For piping isometrics, it is not unreasonable to expect the software to generate the piping isometric automatically.

Bills of Material. As a minimum, the software should have the capability to produce a bill of materials for any of the components included in the model. If a user requires stringent control of piping materials, the system should also provide a piping materials control system or an interface to a third-party materials control system.

Interface to Other Systems. Since many disciplines utilize 3D geometry data, the software should have the ability to interface the 3D geometry data with other computer systems. For piping design, this would include the piping stress analysis systems. This could also include interfaces to fabrication equipment, such as numerically controlled pipe-bending systems.

Design Review. The use of 3D modeling for piping design impacts the design process in a number of ways. First, the design evolves in the 3D model—not on the drawings, as in the case of 2D design. The drawings are not usually produced until the design is completed. This means that the drawings cannot be used as a means of reviewing the design while the design is in progress. Second, since in some companies the use of 3D design has virtually eliminated the plastic model, the plastic model is also no longer available as a design review tool. Thus the 3D software system should provide, either directly or through an interface, the means of reviewing the 3D computer model on a high-performance graphics terminal. These types of systems provide the capability to "walk through" solid shaded models in real time for the purposes of design review.

Training and Implementation. Once again, the issues related to computer-aided drafting apply here as well. The primary difference is one of degree. Systems for

3D computer modeling of piping require more training, more support, and a longer learning curve. Also, these types of systems are more pervasive than simple 2D CAD drafting in that they require a higher level of integration between disciplines and departments and thus a higher level of management attention and support. For these systems to be effective, it is imperative that senior-level design personnel are trained in the use of the system and can use it effectively for piping layout.

Conclusion

Computer-aided drafting and computer-aided design have been used effectively and productively for piping design for a number of years. One of the most important lessons learned from the application of CAD to piping layout, particularly the use of 3D modeling, is that design firms are no longer tied to the same design process and design documentation as when the design was performed manually. The use of 3D piping design provides a number of opportunities for improving the way in which plant design is performed, over and above simply the increase in design productivity. In fact, experience has shown that force-fitting 3D piping design into a project organization and design process geared to manual design actually leads to some inefficiencies.

There appear to be several factors which are important to the continued effective application of this technology. Perhaps most important is the fact that being able to effectively apply this type of software requires training—not only for the individual designers and engineers but also for the supervisors, project engineers, and project managers who control the project work. This type of software opens up new possibilities for improving the way project work is performed, but being able to take advantage of these requires that people at all levels of the project understand the software capabilities as well as its limitations.

REFERENCES

1. ANSI/ASME TDP-1-1985, *Recommended Practices for the Prevention of Water Damage to Steam Turbines Used for Electric Power Generation (Fossil),* American Society of Mechanical Engineers, New York.
2. ANSI/ASME TDP-2-1985, *Recommended Practices for the Prevention of Water Damage to Steam Turbines Used for Electric Power Generation (Nuclear),* American Society of Mechanical Engineers, New York.

FURTHER READING

ASME B31, Code for Pressure Piping, Section B31.1, *Power Piping,* 1998 ed., American Society of Mechanical Engineers, New York.

ASME Y32, Code for Graphic Symbols, Section Y32.2.3-1953, *Graphic Symbols for Pipe Fittings, Valves and Piping,* American Society of Mechanical Engineers, New York.

Hydraulic Institute Standards, 1994 Edition, Hydraulic Institute, Cleveland, OH.

National Fire Protection Codes, vols. 1 to 11, 1998, National Fire Protection Association, Quincy, MA.

OSHA Regulations, Code of Federal Regulations, Title 29, Part 1910.

Pipe Fabrication Institute Standards, Pipe Fabrication Institute, Springdale, PA.

CHAPTER B4

STRESS ANALYSIS OF PIPING SYSTEMS

C. Basavaraju, P.E.
Senior Engineering Specialist
Bechtel Power Corporation
Frederick, Maryland

William Saifung Sun, P.E.
Senior Engineering Specialist
Bechtel Power Corporation
Frederick, Maryland

Piping stress analysis is a discipline which is highly interrelated with piping layout (Chap. B3) and support design (Chap. B5). The layout of the piping system should be performed with the requirements of piping stress and pipe supports in mind (i.e., sufficient flexibility for thermal expansion; proper pipe routing so that simple and economical pipe supports can be constructed; and piping materials and section properties commensurate with the intended service, temperatures, pressures, and anticipated loadings). If necessary, layout solutions should be iterated until a satisfactory balance between stresses and layout efficiency is achieved. Once the piping layout is finalized, the piping support system must be determined. Possible support locations and types must be iterated until all stress requirements are satisfied and other piping allowables (e.g., nozzle loads, valve accelerations, and piping movements) are met. The piping supports are then designed (Chap. B5) based on the selected locations and types and the applied loads.

This chapter discusses several aspects of piping stress analysis. The discussion is heavily weighted to the stress analysis of piping systems in nuclear power plants, since this type of piping has the most stringent requirements. However, the discussion is also applicable to the piping systems in ships, aircraft, commercial buildings, equipment packages, refrigeration systems, fire protection piping, petroleum refineries, and so on. Each of these types of piping must meet the requirements of its applicable code.

FAILURE THEORIES, STRESS CATEGORIES, STRESS LIMITS, AND FATIGUE

Failure Theories

The failure theories most commonly used in describing the strength of piping systems are the *maximum principal stress theory* and the *maximum shear stress theory* (also known as the *Tresca criterion*).

The maximum principal stress theory forms the basis for piping systems governed by ASME B31 and Subsections NC and ND (Classes 2 and 3) of Section III of the ASME Boiler and Pressure Vessel Codes. This theory states that yielding in a piping component occurs when the magnitude of any of the three mutually perpendicular principal stresses exceeds the yield strength of the material.

The maximum shear stress theory is more accurate than the maximum principal stress theory for predicting both yielding and fatigue failure in ductile metals. This maximum shear stress theory forms the basis for piping of Subsection NB (Class 1) of ASME Section III.[1]

The maximum shear stress at a point $\tau_{\max}$ is defined as one-half of the algebraic difference between the largest and the smallest of the three principal stresses σ_1, σ_2, and σ_3. If $\sigma_1 > \sigma_2 > \sigma_3$ (algebraically), then $\tau_{\max} = (\sigma_1 - \sigma_3)/2$. The maximum shear stress theory states that failure of a piping component occurs when the maximum shear stress exceeds the shear stress at the yield point in a tensile test. In the tensile test, at yield, $\sigma_1 = S_y$ (yield stress), $\sigma_2 = \sigma_3 = 0$. So yielding in the component occurs when

$$\tau_{\max} = \frac{\sigma_1 - \sigma_3}{2} = \frac{S_y}{2} \tag{B4.1}$$

Equation (B4.1) has an unnecessary operation of dividing both sides by 2 before comparing them. For the sake of simplicity, a stress defined as $2\tau_{\max}$ and equal to $\sigma_{\max} - \sigma_{\min}$ of the three principal stresses has been used for Class 1 piping. This stress is called the *equivalent intensity of combined stresses,* or *stress intensity.* Thus the stress intensity S is directly comparable to the tabulated yield stress values S_y from tensile tests with some factor of safety.

Stress Categories

There are various failure modes which could affect a piping system. The piping engineer can provide protection against some of these failure modes by performing stress analysis according to the piping codes. Protection against other failure modes is provided by methods other than stress analysis. For example, protection against brittle fracture is provided by material selection. The piping codes address the following failure modes: excessive plastic deformation, plastic instability or incremental collapse, and high-strain–low-cycle fatigue. Each of these modes of failure is caused by a different kind of stress and loading. It is necessary to place these stresses into different categories and set limits to them.

The major stress categories are *primary, secondary,* and *peak.* The limits of these stresses are related to the various failure modes as follows:

1. The primary stress limits are intended to prevent plastic deformation and bursting.
2. The primary plus secondary stress limits are intended to prevent excessive plastic deformation leading to incremental collapse.
3. The peak stress limit is intended to prevent fatigue failure resulting from cyclic loadings.

Primary stresses which are developed by the imposed loading are necessary to satisfy the equilibrium between external and internal forces and moments of the piping system. Primary stresses are not self-limiting. Therefore, if a primary stress exceeds the yield strength of the material through the entire cross section of the piping, then failure can be prevented only by strain hardening in the material. Thermal stresses are never classified as primary stresses. They are placed in both the secondary and peak stress categories.

Secondary stresses are developed by the constraint of displacements of a structure. These displacements can be caused either by thermal expansion or by outwardly imposed restraint and anchor point movements. Under this loading condition, the piping system must satisfy an imposed strain pattern rather than be in equilibrium with imposed forces. Local yielding and minor distortions of the piping system tend to relieve these stresses. Therefore, secondary stresses are self-limiting. Unlike the loading condition of secondary stresses which cause distortion, peak stresses cause no significant distortion. Peak stresses are the highest stresses in the region under consideration and are responsible for causing fatigue failure. Common types of peak stresses are stress concentrations at a discontinuity and thermal gradients through a pipe wall.

Primary stresses may be further divided into general primary membrane stress, local primary membrane stress, and primary bending stress. The reason for this division is that, as will be discussed in the following paragraph, the limit of a primary bending stress can be higher than the limit of a primary membrane stress.

Basic Stress Intensity Limits

The basic stress intensity limits for the stress categories just described are determined by the application of limit design theory together with suitable safety factors.

The piping is assumed to be elastic and perfectly plastic with no strain hardening. When this pipe is in tension, an applied load producing a general primary membrane stress equal to the yield stress of the material S_y results in piping failure. Failure of piping under bending requires that the entire cross section be at this yield stress. This will not occur until the load is increased above the yield moment of the pipe multiplied by a factor known as the *shape factor* of the cross section. The shape factor for a simple rectangular section in bending is 1.5.

When a pipe is under a combination of bending and axial tension, the limit load depends on the ratio between bending and tension. In Fig. B4.1, the limit stress at the outer fiber of a rectangular bar under combined bending and tension is plotted against the average tensile stress across the section. When the average tensile stress P_m is zero, the failure bending stress is 1.5 S_y. When P_m alone is applied (no bending stress P_b), failure stress is yield stress S_y.

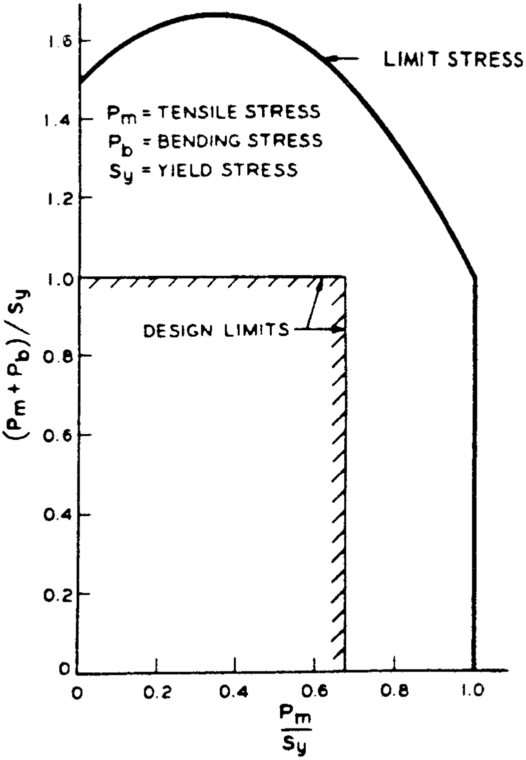

FIGURE B4.1 Limit stress for combined tension and bending (rectangular section). (*ASME, "Criteria."*[1] *Courtesy of ASME.*)

It also can be seen in Fig. B4.1 that a design limit of $\frac{2}{3}S_y$ for general primary membrane stress P_m and a design limit of S_y for primary membrane-plus-bending stress $P_m + P_b$ provide adequate safety to prevent yielding failure.

For secondary stresses, the allowable stresses are given in terms of a calculated elastic stress range. This stress range can be as high as twice the yield stress. The reason for this high allowable stress is that a repetitively applied load which initially stresses the pipe into plastic yielding will, after a few cycles, "shake it down" to elastic action.

This statement can be understood by considering a pipe which is strained in tension to a point ε_1 somewhat beyond its yield strain, as shown in Fig. B4.2. The calculated elastic stress at this point would be equal to the product of the modulus of elasticity E and the strain ε_1, or $S_1 = E\varepsilon_1$. The path $OABC$ is considered as cycling the strain from 0 to ε_1 (loading) and back to 0 (unloading). When the pipe is returned to its original position O, it will retain a residual compressive stress of magnitude $S_1 - S_y$. On each subsequent loading cycle, this residual compression must be overcome before the pipe can go into tension; thus the elastic range has been extended by the value $S_1 - S_y$.

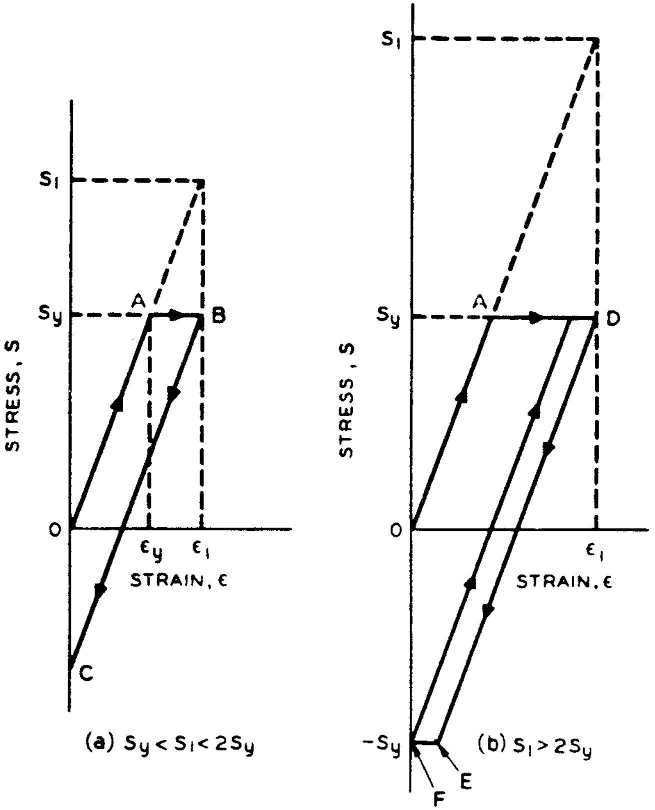

FIGURE B4.2 Strain history beyond yield. (*ASME, "Criteria."*[1] *Courtesy of ASME.*)

Therefore, the allowable secondary stress range can be as high as $2S_y$ when $S_1 = 2S_y$. When $S_1 > 2S_y$, the pipe yields in compression and all subsequent cycles generate plastic strain *EF*. For this reason $2S_y$ is the limiting secondary stress which will shake down to purely elastic action.

Fatigue

As mentioned previously, peak stresses are the highest stresses in a local region and are the source of fatigue failure. The fatigue process may be divided into three stages: *crack initiation* resulting from the continued cycling of high stress concentrations, *crack propagation* to critical size, and *unstable rupture* of the remaining section.

Fatigue has long been a major consideration in the design of rotating machinery, where the number of loading cycles is in the millions and can be considered infinite for all practical purposes. This type of fatigue is called *high-cycle fatigue.* High-

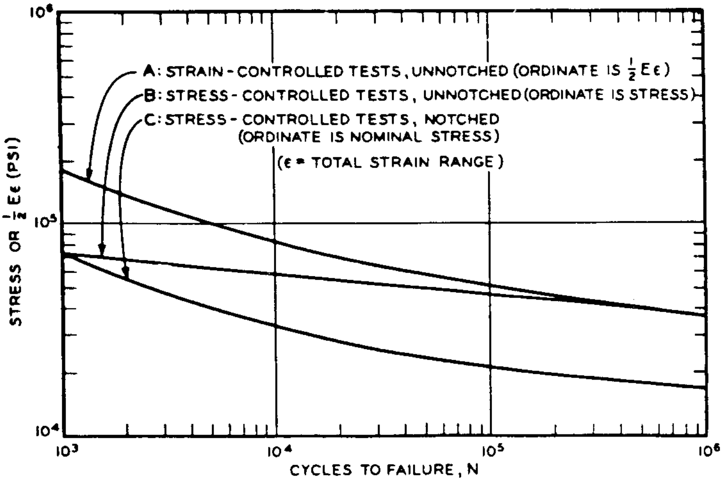

FIGURE B4.3 Typical relationship among stress, strain, and cycles to failure. (*ASME, "Criteria."*[1] *Courtesy of ASME.*)

cycle fatigue involves little or no plastic action. Therefore, it is stress-governed. For every material, a fatigue curve, also called the *S–N curve,* can be generated by experimental test[2] which correlates applied stress with the number of cycles to failure, as shown in Fig. B4.3. For high-cycle fatigue, the analysis is to determine the endurance limit, which is the stress level that can be applied an infinite number of times without failure.

In piping design, the loading cycles applied seldom exceed 10^5 and are frequently only a few thousand. This type of fatigue is called *low-cycle fatigue.* For low-cycle fatigue, data resulting from experimental tests with stress as the controlled variable are considerably scattered. These undesirable test results are attributable to the fact that in the low-cycle region the applied stress exceeds the yield strength of the material, thereby causing plastic instability in the test specimen.

However, when strain is used as the controlled variable, the test results in this low-cycle region are consistently reliable and reproducible.

As a matter of convenience, in preparing fatigue curves, the strains in the tests are multiplied by one-half the elastic modulus to give a pseudostress amplitude. This pseudostress is directly comparable to stresses calculated on the assumption of elastic behavior of piping. In piping stress analysis, a stress called the *alternating stress* S_{alt} is defined as one-half of the calculated peak stress. By ensuring that the number of load cycles N associated with a specific alternating stress is less than the number allowed in the S–N curve, fatigue failure can be prevented. However, practical service conditions often subject a piping system to alternating stresses of different magnitudes. These changes in magnitude make the direct use of the fatigue curves inapplicable since the curves are based on constant-stress amplitude. Therefore, to make fatigue curves applicable for piping, it is necessary to take some other approach.

One method of appraising the fatigue failure in piping is to assume that the cumulative damage from fatigue will occur when the cumulative usage factor U

equals unity, i.e.,

$$U = \Sigma U_i = \Sigma \frac{n_i}{N_i} = 1 \qquad \text{(B4.2)}$$

where U_i = usage factor at stress level i
n_i = number of cycles operating at stress level i
N_i = number of cycles to failure at stress level i per fatigue curve

CLASSIFICATION OF LOADS, SERVICE LIMITS, AND CODE REQUIREMENTS

Classification of Loads

Primary loads can be divided into two categories based on the duration of loading. The first category is *sustained loads.* These loads are expected to be present throughout normal plant operation. Typical sustained loads are pressure and weight loads during normal operating conditions. The second category is *occasional loads.* These loads are present at infrequent intervals during plant operation. Examples of occasional loads are earthquake, wind, and fluid transients such as water hammer and relief valve discharge.

In addition to primary loads, there are *expansion loads.* Expansion loads are those loads due to displacements of piping. Examples are thermal expansion, seismic anchor movements, thermal anchor movements, and building settlement.

Service Limits

Service levels and their limits are defined for nuclear power plant safety-related piping by the ASME Boiler and Pressure Vessel Code, Section III.[3] They are described in the following list:

1. *Level A service limits.* The piping components or supports must satisfy these sets of limits in the performance of their specified service function. Examples of level A loadings are operating pressure and weight loadings.
2. *Level B service limits.* The piping component or support must withstand these loadings without damage requiring repair. Examples of level B loadings are fluid transients such as water hammer and relief valve discharge, and *operating-basis earthquake (OBE),* defined as the maximum likely earthquake postulated to occur during plant design life or one-half of the safe shutdown earthquake (see definition below), whichever is higher.
3. *Level C service limits.* The occurrence of stress up to these limits may necessitate the removal of the piping component from service for inspection or repair of damage. An example of level C loading is the combination of fluid transient loads occurring simultaneously with the operating-basis earthquake.
4. *Level D service limits.* These sets of limits permit gross general deformations with some consequent loss of dimensional stability and damage requiring repair, which may require removal of the piping component from service. An example of level D loading is the loading associated with a loss-of-coolant accident or a

safe-shutdown earthquake (SSE), which is defined as the maximum possible earthquake postulated to occur at the site of the plant at any time.

Code Requirements

There are various ASME and ANSI codes which govern the stress analysis of diferent kinds of pressure piping. These codes contain basic reference data, formulas, and equations necessary for piping design and stress analysis.

Each power plant is committed to a particular edition of a code for different types of piping. For example, the nuclear Class 1, 2, and 3 piping of a power plant may be committed to comply with the ASME Boiler and Pressure Vessel Code, Section III, 1974 edition, while the nonnuclear piping may be committed to ANSI B31.1 *Power Piping Code,* 1973 edition.

The following sections provide summaries of the ASME and ANSI codes.

ASME Boiler and Pressure Vessel Code, Section III, Subsection NB.[3] This subsection provides the code requirements of nuclear piping designated as Class 1. The loadings required to be considered for this subsection are the effects of pressure, weight (live and dead loads), thermal expansion and contraction, impact, earthquake, and vibrations. The stress limits which must be met are as follows:

1. *Primary stress intensity.* The primary stress intensity must meet the following requirement:

$$B_1\left(\frac{PD_o}{2t}\right)+B_2\left(\frac{D_o}{2I}\right)M_i \leq kS_m \tag{B4.3}$$

where B_1, B_2 = primary stress indices for specific piping components under investigation
P = design pressure, psi
D_o = outside diameter of pipe, in
t = nominal wall thickness, in
M_i = resultant moment due to combination of design mechanical loads, in · lb
I = moment of inertia, in^4
kS_m = $1.5S_m$ for service level A; $1.8S_m$ for service level B but not greater than $1.5S_y$; $2.25S_m$ for service level C but not greater than $1.8S_y$; and $3.0S_m$ for service level D but not greater than $2.0S_y$
S_m = allowable design stress intensity, psi
S_y = yield strength value taken at average fluid temperature under consideration, psi

2. *Primary plus secondary stress intensity range.* The following equations are used to evaluate a stress range as the piping system goes from one service load set (pressure, temperature, and moment) to any other service load set which follows in time. For each specified pair of load sets, the stress range S_n is calculated:

$$S_n = C_1\left(\frac{P_0D_o}{2t}\right)+C_2\left(\frac{D_o}{2I}\right)M_i + C_3E_{ab}|\alpha_aT_a-\alpha_bT_b| \tag{B4.4}$$

where C_1, C_2, C_3 = secondary stress indices for specific component under consideration

P_0 = range of service pressure, psi
M_i = resultant range of moment, in · lb
E_{ab} = average modulus of elasticity of two sides of a gross structural discontinuity or material discontinuity at room temperature, psi
α_a, α_b = coefficient of thermal expansion on side *a* or *b* of gross structural discontinuity or material discontinuity at room temperature, in/(in · °F)
T_a, T_b = range of average temperature on side *a* or *b* of gross structural discontinuity or material discontinuity, °F

And S_n has the following limit: $S_n \leq 3S_m$.

If this requirement is not met for all pairs of load sets, then the piping component may still be qualified by using the simplified elastic-plastic discontinuity analysis described below; otherwise, the stress analyst may proceed to the fatigue analysis.

3. *Simplified elastic-plastic discontinuity analysis.* If $S_n > 3S_m$ for some pairs of load sets, a simplified elastic-plastic analysis may be performed if the thermal stress ratchet is not present. This analysis is required only for the specific load sets which exceeded $3S_m$. The following two equations must be satisfied:

$$S_e = C_2\left(\frac{D_o}{2I}\right)M_i^* \leq 3S_m$$

$$C_1\left(\frac{P_0 D_o}{2t}\right) + C_2\left(\frac{D_o}{2I}\right)M_i + C_3 E_{ab}|\alpha_a T_a - \alpha_b T_b| \leq 3S_m \tag{B4.5}$$

where S_e = nominal value of expansion stress, psi
M_i^* = resultant range of moments due to thermal expansion and thermal anchor movements, in · lb
M_i = resultant range of moment excluding moments due to thermal expansion and thermal anchor movements, in · lb
C_3 = stress index for specific component under consideration

For later editions of the code, if $S_n > 3S_m$, the thermal stress ratchet must be evaluated and demonstrated to be satisfactory before a simplified elastic-plastic discontinuity analysis can be done. This ratchet is a function of the $|\Delta T_1|$ (see definition below) range only. The following requirement must be met:

$$|\Delta T_1| \text{ range } \leq \frac{y' S_y C_4}{0.7E\alpha} \tag{B4.6}$$

where

$$y' = \begin{array}{ll} 3.33 & \text{for } x = 0.3 \\ 2.00 & \text{for } x = 0.5 \\ 1.20 & \text{for } x = 0.7 \\ 0.80 & \text{for } x = 0.8 \end{array}$$

$x = PD_o/(2tS_y)$
S_y = yield strength value taken at average fluid temperature under consideration, psi
C_4 = 1.1 for ferritic material and 1.3 for austenitic material
$E\alpha$ = modulus of elasticity E times mean coefficient of thermal expansion α, both at room temperature, psi/°F
P = maximum pressure for set of conditions under consideration, psi

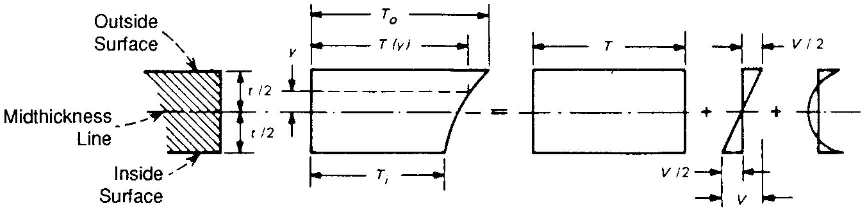

FIGURE B4.4 Decomposition of temperature distribution range. (*Figure NB-3653.2(b)-1, Section III, Division 1, ASME B & PV Code, 1989. Courtesy of ASME.*)

4. *Peak stress intensity range and fatigue analysis.* For each specified loading condition, peak stress is calculated as follows:

$$S_p = K_1C_1\left(\frac{P_0D_o}{2t}\right) + K_2C_2\left(\frac{D_o}{2I}\right)M_i + \frac{K_3E\alpha|\Delta T_1|}{2(1-\nu)} + K_3C_3E_{ab}|\alpha_aT_a - \alpha_bT_b| + \frac{E\alpha|\Delta T_2|}{1-\nu} \tag{B4.7}$$

where K_1, K_2, K_3 = local stress indices for specific component under consideration

ν = Poisson's ratio of material

$|\Delta T_1|$ = absolute value of range of temperature difference between temperature of outside surface and inside surface of pipe wall, assuming moment generating equivalent linear temperature distribution, °F (see Fig. B4.4)

$|\Delta T_2|$ = absolute value of range of that portion of nonlinear thermal gradient through wall thickness not included in ΔT_1, °F (see Fig. B4.4)

For each S_p, an alternating stress intensity S_{alt} is determined by

$$S_{\text{alt}} = \frac{K_eS_p}{2} \tag{B4.8}$$

where

$$K_e = \begin{cases} 1.0 & \text{for } S_n \le 3S_m \\ 1.0 + (1-n)[S_n/(3S_m) - 1]/[n(m-1)] & \text{for } 3S_m < S_n < 3mS_m \\ 1/n & \text{for } S_n \ge 3mS_m \end{cases}$$

m, n = material parameters given in Table B4.1

The alternating stress intensities are used to evaluate the cumulative effect of the stress cycles on the piping system. This evaluation is performed as follows:

a. The number of times each stress cycle of type 1, 2, 3, etc., is repeated during the life of the system shall be called n_1, n_2, n_3, and so on. Cycles shall be superimposed such that the maximum possible peak stress ranges are developed.

TABLE B4.1 Values of m, n, and $T_{\max}$ for Various Classes of Permitted Materials

Materials	m	n	$T_{\max}$,°F
Carbon steel	3.0	0.2	700
Low-alloy steel	2.0	0.2	700
Martensitic stainless steel	2.0	0.2	700
Austenitic stainless steel	1.7	0.3	800
Nickel-chromium-iron	1.7	0.3	800
Nickel-copper	1.7	0.3	800

Source: Table NB-3228.5(b)-1, Section III, Division 1, ASME B & PV Code, 1998. (*Courtesy of ASME.*)
Note: (°F − 32)/1.8 = °C).

b. For each type of stress cycle, determine the alternating stress intensity S_{alt}.

c. For each value of S_{alt}, use the applicable design fatigue curve from the code to determine the maximum number of cycles permitted if this were the only cycle occurring. These numbers shall be designated N_1, N_2, N_3, and so on.

d. For each type of stress cycle, calculate the usage factor:

$$U_1 = \frac{n_1}{N_1} \qquad U_2 = \frac{n_2}{N_2} \qquad U_3 = \frac{n_3}{N_3} \qquad \cdots$$

e. The cumulative usage factor U is the sum of the individual usage factors:

$$U = U_1 + U_2 + U_3 + \cdots$$

ASME Boiler and Pressure Vessel Code, Section III, Subsections NC and ND.[3] These two subsections give the code requirements of nuclear piping designated as Class 2 and Class 3, respectively. The loadings required to be considered for Subsections NC and ND are the effects of pressure, weight, other sustained loads, thermal expansion and contraction, and occasional loads. The stress limits to be met are as follows:

1. *Stresses due to sustained loads.* The calculated stresses due to pressure, weight, and other sustained mechanical loads must meet the allowable $1.5S_h$, that is,

$$\frac{B_1 P D_o}{2t} + \frac{B_2 M_A}{Z} \le 1.5 S_h \tag{B4.9}$$

where P = internal design pressure, psi
D_o = outside diameter of pipe, in
t = nominal wall thickness, in
Z = section modulus of pipe, in^3
M_A = resultant moment loading on cross section due to weight and other sustained loads, in · lb
S_h = basic material allowable stress at design temperature, psi

2. *Stresses due to occasional loads.* The calculated stress due to pressure, weight, other sustained loads, and occasional loads must meet the allowables as follows:

$$\frac{B_1 P_{\max} D_o}{2t} + \frac{B_2(M_A + M_B)}{Z} \leq kS_h \tag{B4.10}$$

where M_B = resultant moment loading on cross section due to occasional loads, such as thrusts from relief and safety valves, loads from pressure and flow transients, and earthquake, if required. For earthquake, use only one-half the range. Effects of anchor displacement due to earthquake may be excluded if they are included under thermal expansion

$P_{\max}$ = peak pressure, psi

kS_h = $1.8S_h$ for service level B (upset condition) but not greater than $1.5S_y$; $2.25S_h$ for service level C (emergency condition) but not greater than $1.8S_y$; and $3.0S_h$ for service level D (faulted condition) but not greater than $2.0S_y$

S_h = material allowable stress at temperature consistent with loading under consideration, psi

S_y = material yield strength at temperature consistent with loading under consideration, psi

3. *Stresses due to thermal expansion*

a. Thermal expansion stress range must meet the allowable S_A, that is,

$$\frac{iM_C}{Z} \leq S_A \tag{B4.11}$$

where S_A = allowable stress range for expansion stresses
= $f(1.25S_c + 0.25S_h)$, psi

f = stress range reduction factor, as in Table B4.2

M_C = range of resultant moment due to thermal expansion, in · lb; also include moment effects of anchor displacements due to earthquake if anchor displacement effects were omitted from occasional loadings

S_c = basic material allowable stress at minimum (cold) temperature, psi

TABLE B4.2 Stress-Range Reduction Factors

Number of equivalent full-temperature cycles N	f
7,000 and less	1.0
7,000 to 14,000	0.9
14,000 to 22,000	0.8
22,000 to 45,000	0.7
45,000 to 100,000	0.6
100,000 and over	0.5

Source: Table NC-3611.2(e)-1, Section III, Division 1, ASME B & PV Code, 1998. (*Courtesy of ASME.*)

S_h = basic material allowable stress at maximum (hot) temperature, psi
i = stress intensification factor

b. If Eq. (B4.11) is not met, the piping may be qualified by meeting the following equation:

$$\frac{PD_o}{4t} + \frac{0.75iM_A}{Z} + \frac{iM_C}{Z} \leq S_h + S_A \qquad \text{(B4.12)}$$

where $0.75i$ shall not be less than 1.0.

4. *Stresses due to nonrepeated anchor movement.* The effect of any single nonrepeated anchor movement (such as building settlement) must meet $3.0S_c$,

$$\frac{iM_D}{Z} \leq 3.0S_c \qquad \text{(B4.13)}$$

where M_D = resultant moment due to any single nonrepeated anchor movement (e.g., predicted building settlement), in · lb.

5. The *stress-intensification factor (SIF)* is defined as the ratio of the maximum stress intensity to the nominal stress, calculated by the ordinary formulas of mechanics. It is used as a safety factor to account for the effect of localized stresses on piping under a repetitive loading. In piping design, this factor is applied to welds, fittings, branch connections, and other piping components where stress concentrations and possible fatigue failure might occur. Usually, experimental methods are used to determine these factors.

It is recognized that some of the SIFs for the same components are different for different codes. In some cases, different editions of the same code provide different SIFs for a given component. The way that the SIFs are applied to moment loadings is also different for different codes. The B31.1 and ASME Section III codes require that the same SIF be applied to all the three-directional moments while the B31.3, B31.4, B31.5, and B31.8 codes require that different SIFs be applied to the in-plane and out-of-plane moments, with no SIF required for torsion (see Fig. B4.5*a* and figure note 10).

Therefore, the stress analyst has to ensure that the appropriate SIFs from the applicable code (i.e., committed code) are used. The formulas for SIFs in the ASME Section III code (1989 edition) are given in Fig. B4.5*c* for reference.

Recommended SIFs for some piping components which are not addressed in the code are listed below:

a. Weldolets or sockolets[4]

(1) If $r/R > 0.5$,

$$i = \frac{0.9}{h^{2/3}} \qquad \text{where} \qquad h = \frac{3.3t}{R} \qquad \text{(B4.14)}$$

where r = mean radius of branch pipe, in
t = wall thickness of run pipe, in
R = mean radius of run pipe, in

Item	Description	Flexibility factor n	Stress int. factor i [Notes (9), (10)]	
			In-plane i	Out-of-plane i_o
1	Welding elbow[1,2,3,5,8] or pipe bend	$\frac{1.65}{h}$	$\frac{0.9}{h^{2/3}}$	$\frac{0.75}{h^{2/3}}$
2	Closely spaced miter bend[1,2,3,8] $s < r(1 + \tan\theta)$	$\frac{1.52}{h^{5/6}}$	$\frac{0.9}{h^{2/3}}$	$\frac{0.75}{h^{2/3}}$
3	Widely spaced miter bend,[1,2,4,8] $s \geqq r(1 + \tan\theta)$	$\frac{1.52}{h^{5/6}}$	$\frac{0.9}{h^{2/3}}$	$\frac{0.75}{h^{2/3}}$
4	Welding tee[1,2] per ANSI B16.9	1	$\frac{3}{4}i_o + \frac{1}{4}$	$\frac{0.9}{h^{2/3}}$
5	Reinforced fabricated tee,[1,2,6] with pad or saddle	1	$\frac{3}{4}i_o + \frac{1}{4}$	$\frac{0.9}{h^{2/3}}$
6	Unreinforced fabricated tee[1,2,6]	1	$\frac{3}{4}i_o + \frac{1}{4}$	$\frac{0.9}{h^{2/3}}$
7	Butt-welded joint, reducer, or welding neck flange	1	1.0	
8	Double-welded slip-on flange	1	1.2	
9	Fillet-welded joint, or socket weld flange	1	1.3	
10	Lap-joint flange (with ANSI B16.9 lap-joint stub)	1	1.6	
11	Threaded pipe joint, or threaded flange	1	2.3	
12	Corrugated straight pipe, or corrugated or creased bend[7]	5	2.5	

FIGURE B4.5*a* Flexibility factor n and stress intensification factors i_i and i_o per ASME B31.3, B31.4, B31.5, and B31.8 codes.

Flexibility characteristic h	Sketch
$\dfrac{tR}{r^2}$	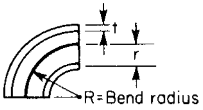
$\dfrac{\cot\theta}{2}\,\dfrac{ts}{r^2}$	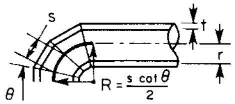
$\dfrac{1+\cot\theta}{2}\,\dfrac{t}{r}$	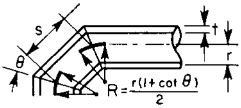
$4.4\,\dfrac{t}{r}$	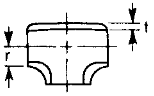
$\dfrac{(t+\frac{1}{2}T)^{5/2}}{t^{3/2}r}$	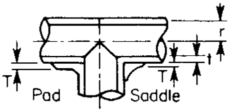
$\dfrac{t}{r}$	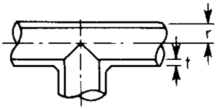

Meaning of symbols:

r = mean radius of matching pipe

t = (for elbows, bends, and miter bends) nominal wall thickness of elbow, bend, or miter bend; see Note 5

t = (for tees and nozzles), the nominal wall thickness of the matching pipe

R = bend radius of pipe bend or elbow

θ = one-half angle between adjacent miter axes

s = miter spacing at center line

T = pad or saddle thickness, in.

NOTES:

1. The flexibility factors n and the stress-intensification factors i in the table apply to bending and in no case shall be taken less than unity. Factors for torsion equal unity. Both factors apply over the effective arc length (shown by heavy center lines in the sketches) for curved and miter elbows and to the intersection point for tees.
2. Those flexibility and stress intensification factors which are proportional to a power of the characteristic h may be read from the graph of Fig. B4-5*b*.
3. Where flanges are attached at one or both ends, the values of n and i in the table shall be corrected by the multiplicative factors C_f given by the formulas:

$$C_f = h^{1/6} \text{ (one end flanged)}$$

$$C_f = h^{1/3} \text{ (both ends flanged)}$$

4. Also includes single-miter joint.
5. Cast butt-welding elbows may have considerably heavier walls than that of the pipe with which they are used. Large errors may be introduced unless the effect of such greater thickness is considered.
6. $h = 4.05t/r$ for $T > 1\frac{1}{2}t$
7. Factors shown apply to bending; flexibility factor for torsion = 0.9.
8. In large-diameter thin-wall elbows and bends internal pressure can significantly decrease both flexibility and stress intensification factors. To correct values obtained from above tabulation so as to account for internal pressure, divide the flexibility factor by the quantity

$$[1 + 6(P/E)(r/t)^{7/3}(R/r)^{1/3}]$$

and divide the stress intensification factor by the quantity

$$[1 + 3.25(P/E)(r/t)^{5/2}(R/r)^{2/3}]$$

where P = internal gage pressure and E = Young's modulus.

9. For items 2 and 3, $i_o = 0.9/h^{2/3}$ per ASME B31.3 and B31.8 codes.
10. For ASME B31.3 and B31.8 piping, a single intensification factor equal to $0.9/h^{2/3}$ may be used for both i_i and i_o if desired.

FIGURE B4.5*a* (*Continued*) Flexibility factor n and stress intensification factors i_i and i_o per ASME B31.3, B31.4, B31.5, and B31.8 codes.

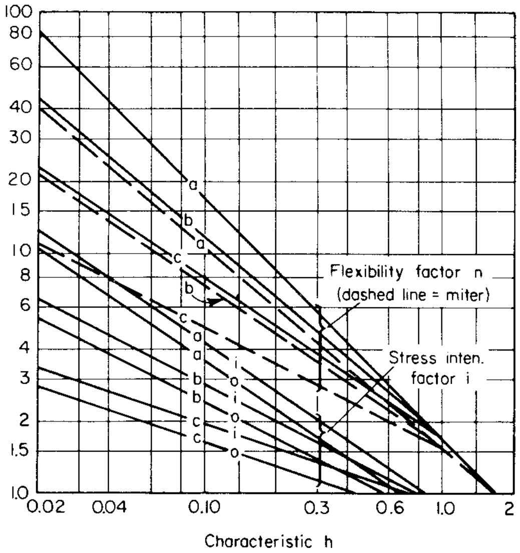

FIGURE B4.5*b* Flexibility and stress intensification factors for those cases where result is a power of the characteristic *h,* defined in Fig. B4.5*a*. Key: *a* = no flanges; *b* = one flange; *c* = two flanges; *i* = in plane; *o* = out of plane.

(2) If $r/R \leq 0.5$,

$$i = 1.5\left(\frac{R}{T}\right)^{2/3}\left(\frac{r}{R}\right)^{1/2}\frac{t}{T}\frac{r}{r_p} \tag{B4.15}$$

or

$$i = \frac{0.9}{(3.3T/R)^{2/3}} \tag{B4.16}$$

whichever is less and

where R = run pipe mean radius, in
T = run pipe wall thickness, in
r = branch pipe mean radius, in
t = branch pipe wall thickness, in
r_p = outer radius of weldolet, in

SIF values for typical weldolet branch connections with $r/R \leq 0.5$ are tabulated in Tables B4.3*a* to B4.3*l*.

b. *Half-Couplings (Welding Boss).* For half-couplings with $r/R \leq 0.5$, use the above branch connection Eq. (B4.15) or the unreinforced fabricated tee equation, whichever is less. For half-coupling with $r/R > 0.5$, use the unreinforced fabricated tee formula. Tables B4.4*a* to B4.4*f* give SIFs for commonly used half-coupling configurations. If the half-coupling rating is not known,

Description	Flexibility Characteristic h	Flexibility Factor k	Stress Intensification Factor i	Sketch
Welding elbow or pipe bend [Notes (1), (2), (3)]	$\frac{t_n R}{r^2}$	$\frac{1.65}{h}$	$\frac{0.9}{h^{2/3}}$	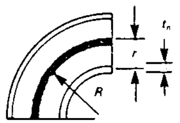
Closely spaced miter bend [Notes (1), (2), (3)] $s < r\,(1 + \tan\theta)$	$\frac{s t_n \cot\theta}{2r^2}$	$\frac{1.52}{h^{5/6}}$	$\frac{0.9}{h^{2/3}}$	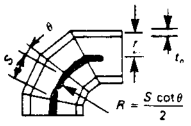 θ S r t_n $R = \frac{S \cot\theta}{2}$
Widely spaced miter bend [Notes (1), (2), (4)] $s \geq r\,(1 + \tan\theta)$	$\frac{t_n (1 + \cot\theta)}{2r}$	$\frac{1.52}{h^{5/6}}$	$\frac{0.9}{h^{2/3}}$	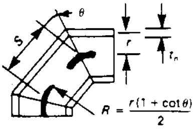 θ S r t_n $R = \frac{r(1 + \cot\theta)}{2}$
Welding tee per ANSI B16.9 [Notes (1), (2)]	$\frac{4.4\, t_n}{r}$	1	$\frac{0.9}{h^{2/3}}$	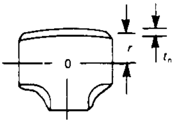
Reinforced fabricated tee [Notes (1), (5), (10)]	$\frac{\left(t_n + \frac{t_e}{2}\right)^{5/2}}{r\,(t_n)^{3/2}}$	1	$\frac{0.9}{h^{2/3}}$	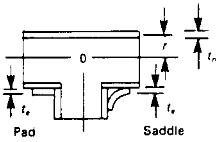 r 0 t_n t_e Pad t_e Saddle
Unreinforced fabricated tee [Notes (1), (10)]	$\frac{t_n}{r}$	1	$\frac{0.9}{h^{2/3}}$	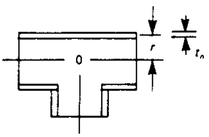

FIGURE B4.5c Flexibility and stress intensification factors ($D_o/t_n \leq 100$). (*Figure NC-3673.2(b)-1, Section III, Division 1, ASME B & PV Code, 1998. Courtesy of ASME.*)

Description	Flexibility Factor k	Stress Intensification Factor i	Sketch
Branch connection [Note (6)]	1	For checking branch end $Z = \pi(r'_m)^2 T'_b$ $i = 1.5\left(\frac{R_m}{T_r}\right)^{2/3}\left(\frac{r'_m}{R_m}\right)^{1/2}\left(\frac{T'_b}{T_r}\right)\left(\frac{r'_m}{r_p}\right)$ For checking run ends $Z = \pi(R_m)^2 T_r$ $i = 0.4\left(\frac{R_m}{T_r}\right)^{2/3}\left(\frac{r'_m}{R_m}\right)$ but not less than 1.5	Fig. NC-3673.2(b)-2
Girth butt weld [Note (1)] $t_n \geq 0.237$ in.	1	1.0	
Girth butt weld [Note (1)] $t_n < 0.237$ in.	1	1.9 max. or $0.9(1 + 3\delta/t_n)$ but not less than 1.0	
Circumferential fillet welded or socket welded joints [Note (11)]	1	$2.1/(C_x/t_n)$ but not less than 1.3	Fig. NC-4427-1 sketches (c-1), (c-2), and (c-3)
Brazed joint	1	2.1	Fig. NC-4511-1
30 deg. tapered transition (ANSI B16.25) [Note (1)]	1	1.9 max. or $1.3 + 0.0036\frac{D_o}{t_n} + 3.6\frac{\delta}{t_n}$	
Concentric and eccentric reducers [Note (7)] (ANSI B16.9)	1	2.0 max. or $0.5 + 0.01\alpha\left(\frac{D_2}{t_2}\right)^{1/2}$	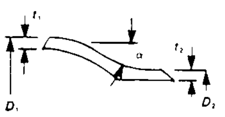
Threaded pipe joint or threaded flange	1	2.3	
Corrugated straight pipe or corrugated or creased bend [Note (8)]	5	2.5	

FIGURE B4.5*c* (*Continued*) Flexibility and stress intensification factors ($D_o/t_n \leq 100$). (*Figure NC-3673.2(b)-1, Section III, Division 1, ASME B & PV Code, 1998. Courtesy of ASME.*)

assume a Class 3000 half-coupling, since this will give the more conservative value.

c. Sweepolets. For branch:

$$i = 0.45\left(\frac{R}{T}\right)^{2/3}\left(\frac{r}{R}\right)^{1/2}\frac{t}{T}F_1F_s \qquad \text{(B4.17)}$$

(1) The following nomenclature applies:
  r = mean radius of pipe, in. (matching pipe for tees and elbows)
  t_n = nominal wall thickness of pipe, in. [matching pipe for tees and elbows, see Note (9)]
  R = bend radius of elbow or pipe bend, in.
  θ = one-half angle between adjacent miter axes, deg.
  s = miter spacing at center line, in.
  t_e = reinforced thickness, in.
  δ = average permissible mismatch at girth butt welds as shown in Fig. NC-4233-1. A value of δ less than $\frac{1}{32}$ in. may be used provided the smaller mismatch is specified for fabrication. For "flush" welds, as defined in Fig. NB-3683.1(c)-1, δ may be taken as zero, i = 1.0, and flush welds need not be ground.
  D_o = outside diameter, in.

(2) The flexibility factors k and stress intensification factors i apply to bending in any plane for fittings and shall in no case be taken less than unity. Both factors apply over the effective arc length (shown by heavy center lines in the sketches) for curved and miter elbows, and to the intersection point for tees. The values of k and i can be read directly by entering with the characteristic h computed from the equations given.

(3) Where flanges are attached to one or both ends, the values of k and i shall be corrected by the factor c given below.
  (a) One end flanged, $c = h^{1/6}$
  (b) Both ends flanged, $c = h^{1/3}$

(4) Also includes single miter joints.

(5) When $t_e > 1.5t_n$, $h = 4.05t_n/r$

(6) The equation applies only if the following conditions are met.
  (a) The reinforcement area requirements of NC-3643 are met.
  (b) The axis of the branch pipe is normal to the surface of run pipe wall.
  (c) For branch connections in a pipe, the arc distance measured between the centers of adjacent branches along the surface of the run pipe is not less than three times the sum of their inside radii in the longitudinal direction or not less than two times the sum of their inside radii along the circumference of the run pipe.
  (d) The inside corner radius r_1 [Fig. NC-3673.2(b)-2] for nominal branch pipe size greater than 4 in. shall be between 10% and 50% T_r. The radius r_1 is not required for nominal branch pipe size smaller than 4 in.
  (e) The outer radius r_2 is not less than the larger of $T_b/2$, $(T_b + Y)/2$ [Fig. NC-3673-2(b)-2 sketch (c)] or $T_r/2$.
  (f) The outer radius r_3 is not less than the larger of
    (1) $0.002\theta\, d_o$
    (2) 2 $(\sin\theta)^3$ times the offset for the configurations shown in Fig. NC-3673.2(b)-2 sketches (a) and (b).
  (g) $R_m/T_r \leq 50$ and $r'_m/R_m \leq 0.5$.
  (h) The outer radius r_2 is not required provided an additional multiplier of 2.0 is included in the equations for branch end and run end stress intensification factors. In this case, the calculated value of i for the branch or run shall not be less than 2.1.

(7) The equation applies only if the following conditions are met.
  (a) Cone angle α does not exceed 60 deg.
  (b) The larger of D_1/t_1 and D_2/t_2 does not exceed 100.
  (c) The wall thickness is not less than t_1 throughout the body of the reducer, except in and immediately adjacent to the cylindrical portion on the small end, where the thickness shall not be less than t_2.
  (d) For eccentric reducers, α is the maximum cone angle.

(8) Factors shown apply to bending; flexibility factor for torsion equals 0.9.

(9) The designer is cautioned that cast butt welding elbows may have considerably heavier walls than that of the pipe with which they are used. Large errors may be introduced unless the effect of these greater thicknesses is considered.

(10) The stress intensification factor i shall in no case be taken as less than 2.1.

(11) In Fig. NC-4427-1(c-1) and (c-2), C_x shall be taken as X_{min} and $C_x \geq 1.25\ t_n$. In Fig. NC-4427-1 (c-3), $C_x \geq 0.75\ t_n$. For unequal leg lengths use the smaller leg length for C_x.

FIGURE B4.5*c* (*Continued*) Flexibility and stress intensification factors ($D_o/t_n \leq 100$). (*Figure NC-3673.2(b)-1, Section III, Division 1, ASME B & PV Code, 1998. Courtesy of ASME.*)

For run:

$$\text{For } \frac{r}{R} > 0.5 \qquad i = 0.40\left(\frac{R}{T}\right)^{2/3}(F_2)(F_s) \tag{B4.18}$$

$$\text{For } \frac{r}{R} \leq 0.5 \qquad i = 0.8\left(\frac{R}{T}\right)^{2/3}\left(\frac{r}{R}\right)F_s \quad \text{but not less than 1.5} \tag{B4.19}$$

where $F_1 = F_2 = 1.0$ for flush or dressed insert welds
  $= 1.6$ for as-welded insert welds
  $F_2 = (0.5 + r/R)$, but not less than 1.0 for as-welded insert welds
  $F_s = 1 + 0.05(r - 3)$, but not less than 1.0
  R = mean radius of run pipe, in

TABLE B4.3*a* SIFs for Typical Weldolet Branch Connections (Run Pipe Size: NPS 1½ or DN 40)

Branch pipe			Run pipe, NPS 1½ (DN 40)			
			Run pipe schedule			
			10*s*	40	80	160
			Run pipe wall thickness			
NPS	Sch.	Thickness	0.109"	0.145"	0.200"	0.281"
½ (DN 15)	10*s*	0.083"	1.665	1.031	1.000	—
	40	0.109"	2.074	1.285	1.000	1.000
	80	0.147"	2.582	1.599	1.000	1.000
	160	0.188"	—	—	1.086	2.000

1 in = 25.4 mm

r = mean radius of branch pipe, in
T = nominal wall thickness of run pipe, in
t = nominal wall thickness of branch pipe, in

If a more detailed analysis is desirable, see Ref. 5 for the equations to be used for moment separation.

d. *Lateral branch connections (45°).*[6,7] For $r_b/r > 0.5$,

$$i = \frac{0.9}{h^{2/3}} \qquad \text{where} \qquad h = \frac{1.97t}{r} \tag{B4.20}$$

TABLE B4.3*b* SIFs for Typical Weldolet Branch Connections (Run Pipe Size: NPS 2 or DN 50)

Branch pipe			Run pipe, NPS 2 (DN 50)			
			Run pipe schedule			
			10*s*	40	80	160
			Run pipe wall thickness			
NPS	Sch.	Thickness	0.109"	0.154"	0.218"	0.344"
½ (DN 15)	10*s*	0.083"	1.731			
	40	0.109"	2.157	1.209	1.000	
	80	0.147"			1.000	1.000
	160	0.188"			1.000	1.000
¾ (DN 20)	10*s*	0.083"	1.964			
	40	0.113"	2.550	1.429	1.000	
	80	0.154"			1.015	1.000
	160	0.219"			1.286	1.000

1 in = 25.4 mm

TABLE B4.3*c* SIFs for Typical Weldolet Branch Connections (Run Pipe Size: NPS 2½ (DN 65) and NPS 3 (DN 80))

Branch pipe			Run pipe, NPS 2½ (DN 65)				Run pipe, NPS 3 (DN 80)			
			Run pipe schedule				Run pipe schedule			
			10*s*	40	80	160	10*s*	40	80	160
			Run pipe wall thickness				Run pipe wall thickness			
NPS	Sch.	Thickness	0.120"	0.203"	0.276"	0.375"	0.120"	0.216"	0.300"	0.438"
½ (DN 15)	10*s*	0.083"	1.524	1.000			1.576	1.000		
	40	0.109"	1.899	1.000	1.000		1.965	1.000	1.000	
	80	0.147"		1.000	1.000	1.000		1.000	1.000	1.000
	160	0.188"			1.000	1.000			1.000	1.000
¾ (DN 20)	10*s*	0.083"	1.728	1.000			1.788	1.000		
	40	0.113"	2.245	1.000	1.000		2.322	1.000	1.000	
	80	0.154"		1.185	1.000	1.000		1.106	1.000	1.000
	160	0.219"			1.000	1.000			1.000	1.000
1 (DN 25)	10*s*	0.109"	2.603	1.078			2.694	1.006		
	40	0.133"	3.082	1.277	1.000		3.189	1.192	1.000	
	80	0.179"		1.619	1.000	1.000		1.511	1.000	1.000
	160	0.250"			1.225	1.000			1.103	1.000

1 in = 25.4 mm

TABLE B4.3*d* SIFs for Typical Weldolet Branch Connections (Run Pipe Size: NPS 4 (DN 100) and 6 or (DN 150))

Branch pipe			Run pipe, NPS 4 (DN 100)					Run pipe, NPS 6 (DN 150)				
			Run pipe schedule					Run pipe schedule				
			10*s*	40	80	120	160	10*s*	40	80	120	160
			Run pipe wall thickness					Run pipe wall thickness				
NPS (DN)	Sch.	Thickness	0.120"	0.237"	0.337"	0.438"	0.531"	0.134"	0.280"	0.432"	0.562"	0.719"
½	10*s*	0.083"	1.646	1.000				1.462	1.000			
(15)	40	0.109"	2.051	1.000	1.000			1.822	1.000	1.000		
	80	0.147"		1.000	1.000	1.000			1.000	1.000	1.000	
	160	0.188"			1.000	1.000	1.000			1.000	1.000	1.000
¾	10*s*	0.083"	1.867	1.000				1.659	1.000			
(20)	40	0.113"	2.425	1.000	1.000			2.154	1.000	1.000		
	80	0.154"		1.109	1.000	1.000			1.000	1.000	1.000	
	160	0.219"			1.000	1.000	1.000			1.000	1.000	1.000
1	10*s*	0.109"	2.813	1.000				2.499	1.000			
(25)	40	0.133"	3.330	1.066	1.000			2.958	1.000	1.000		
	80	0.179"		1.352	1.000	1.000			1.094	1.000	1.000	
	160	0.250"			1.009	1.000	1.000			1.000	1.000	1.000
1½	10*s*	0.109"	3.762	1.205				3.342	1.000			
(40)	40	0.145"	4.855	1.555	1.000			4.313	1.258	1.000		
	80	0.200"		2.044	1.132	1.000			1.654	1.000	1.000	
	160	0.281"			1.548	1.000	1.000			1.092	1.000	1.000
2	10*s*	0.109"						3.907	1.140			
(50)	40	0.154"						5.357	1.563	1.000		
	80	0.218"							2.117	1.023	1.000	
	160	0.344"								1.620	1.041	1.000
2½	10*s*	0.120"						4.968	1.449			
(65)	40	0.203"						8.027	2.342	1.132		
	80	0.276"							3.054	1.477	1.000	
	160	0.375"								2.017	1.296	1.000

1 in = 25.4 mm

TABLE B4.3*e* SIFs for Typical Weldolet Branch Connections (Run Pipe Size: NPS 8 or DN 200)

Branch pipe			Run pipe, NPS 8 (DN 200)				
			Run pipe schedule				
			10*s*	40	80	120	160
NPS (DN)	Sch.	Thickness	Run pipe wall thickness				
			0.148"	0.322"	0.500"	0.719"	0.906"
½	10*s*	0.083"	1.295	1.000			
(15)	40	0.109"	1.614	1.000	1.000		
	80	0.147"		1.000	1.000		
	160	0.188"			1.000	1.000	1.000
¾	10*s*	0.083"	1.470	1.000			
(20)	40	0.113"	1.909	1.000	1.000		
	80	0.154"		1.000	1.000		
	160	0.219"			1.000	1.000	1.000
1	10*s*	0.109"	2.214	1.000			
(25)	40	0.133"	2.621	1.000	1.000		
	80	0.179"		1.000	1.000		
	160	0.250"			1.000	1.000	1.000
1½	10*s*	0.109"	2.961	1.000			
(40)	40	0.145"	3.821	1.042	1.000		
	80	0.200"		1.371	1.000		
	160	0.281"			1.000	1.000	1.000
2	10*s*	0.109"	3.461	1.000			
(50)	40	0.154"	4.746	1.295	1.000		
	80	0.218"		1.754	1.000		
	160	0.344"			1.329	1.000	1.000
2½	10*s*	0.120"	4.401	1.201			
(65)	40	0.203"	7.112	1.940	1.000		
	80	0.276"		2.530	1.211		
	160	0.375"			1.654	1.000	1.000
3	10*s*	0.120"	5.049	1.377			
(80)	40	0.216"	8.704	2.374	1.136		
	80	0.300"		3.172	1.518		
	160				2.102	1.142	1.000

1 in = 25.4 mm

$$\text{For } \frac{r_b}{r} \leq 0.5 \quad i = 0.537\left(\frac{r}{t}\right)^{2/3}\left(\frac{r_b}{r}\right)^{1/2} \tag{B4.21}$$

where t = run pipe wall thickness, in
r = run pipe mean radius, in
r_b = branch pipe mean radius, in

These equations are for integrally reinforced branch connections such as latrolets. By the analogy used in Fig. NC-3673.2(b)-1 in Section III of the ASME Code, the SIF for unreinforced 45° branch connections (stub-ins) can be obtained by multiplying the factors obtained above by $(4.4)^{2/3} = 2.685$.

TABLE B4.3*f* SIFs for Typical Weldolet Branch Connections (Run Pipe Size: NPS 10 (DN 250))

			Run pipe, NPS 10 (DN 250)				
			Run pipe schedule				
Branch pipe			10*s*	40	80	120	160
			Run pipe wall thickness				
NPS (DN)	Sch.	Thickness	0.165"	0.365"	0.594"	0.844"	1.125"
¾	10*s*	0.083"	1.272	1.000			
(20)	40	0.113"	1.652	1.000	1.000		
	80	0.154"		1.000	1.000		
	160	0.219"			1.000	1.000	1.000
1	10*s*	0.109"	1.916	1.000			
(25)	40	0.133"	2.269	1.000	1.000		
	80	0.179"		1.000	1.000		
	160	0.250"			1.000	1.000	1.000
1½	10*s*	0.109"	2.563	1.000			
(40)	40	0.145"	3.308	1.000	1.000		
	80	0.200"		1.154	1.000		
	160	0.281"			1.000	1.000	1.000
2	10*s*	0.109"	2.997	1.000			
(50)	40	0.154"	4.108	1.090	1.000		
	80	0.218"		1.477	1.000		
	160	0.344"			1.035	1.000	1.000
2½	10*s*	0.120"	3.810	1.011			
(65)	40	0.203"	6.157	1.634	1.000		
	80	0.276"		2.131	1.000		
	160	0.375"			1.288	1.000	1.000
3	10*s*	0.120"	4.371	1.160			
(80)	40	0.216"	7.535	2.000	1.000		
	80	0.300"		2.672	1.182		
	160	0.438"			1.637	1.000	1.000
4	10*s*	0.120"	5.172	1.373			
(100)	40	0.237"	9.807	2.603	1.152		
	80	0.337"		3.572	1.581		
	120	0.438"			1.980	1.098	1.000
	160	0.531"			2.318	1.286	1.000

1 in = 25.4 mm

e. *Pipet*

$$i = \frac{0.9}{h^{2/3}} \qquad \text{(B4.22)}$$

For butt-weld pipet $h = \dfrac{3.3t}{r}$

For socket-weld pipet $h = \dfrac{5.9t}{r}$

For threaded pipet $h = \dfrac{4.19t}{r}$

TABLE B4.3*g* SIFs for Typical Weldolet Branch Connections (Run Pipe Size: NPS 12 or DN 300)

Branch pipe			Run pipe, NPS 12 (DN 300)					
			Run pipe schedule					
			10*s*	40*s*	40	80	120	160
			Run pipe wall thickness					
NPS (DN)	Sch.	Thickness	0.180"	0.375"	0.406"	0.688"	1.000"	1.312"
¾ (20)	10*s*	0.083"	1.132	1.000	1.000			
	40	0.113"	1.471	1.000	1.000			
	80	0.154"		1.000	1.000	1.000		
	160	0.219"				1.000	1.000	1.000
1 (25)	10*s*	0.109"	1.706	1.000	1.000			
	40	0.133"	2.020	1.000	1.000			
	80	0.179"		1.000	1.000	1.000	1.000	1.000
	160	0.250"				1.000	1.000	1.000
1½ (40)	10*s*	0.109"	2.282	1.000	1.000			
	40	0.145"	2.944	1.000	1.000			
	80	0.200"		1.136	1.000	1.000	1.000	1.000
	160	0.281"				1.000	1.000	1.000
2 (50)	10*s*	0.109"	2.667		1.000			
	40	0.154"	3.657	1.073	1.000			
	80	0.218"		1.454	1.273	1.000	1.000	1.000
	160	0.344"				1.000	1.000	1.000
2½ (65)	10*s*	0.120"	3.392		1.000			
	40	0.203"	5.480	1.609	1.409			
	80	0.276"		2.098	1.837	1.000	1.000	1.000
	160	0.375"				1.038	1.000	1.000
3 (80)	10*s*	0.120"	3.890		1.000			
	40	0.216"	6.707	1.969	1.724			
	80	0.300"		2.630	2.303	1.000	1.000	1.000
	160	0.438"				1.319	1.000	1.000
4 (100)	10*s*	0.120"	4.603		1.183			
	40	0.237"	8.730	2.562	2.244			
	80	0.337"		3.516	3.079	1.273	1.000	1.000
	120	0.438"				1.595	1.000	1.000
	160	0.531"				1.868	1.000	1.000

1 in = 25.4 mm

f. Branchlet

$$i = \frac{0.9}{h^{2/3}} \qquad \text{where} \qquad h = \frac{3.8t}{r} \tag{B4.23}$$

g. Reducing elbow

$$i = \frac{0.9}{(TB/R^2)^{2/3}} \qquad \text{or} \qquad 2.0\text{—whichever is higher} \tag{B4.24}$$

TABLE B4.3*h* SIFs for Typical Weldolet Branch Connections (Run Pipe Size: NPS 14 or DN 350)

Branch pipe			Run pipe, NPS 14 (DN 350)					
			Run pipe schedule					
			10	30	40	80	120	160
			Run pipe wall thickness					
NPS (DN)	Sch.	Thickness	0.250"	0.375"	0.438"	0.750"	1.094"	1.406"
1 (25)	10*s*	0.109"	1.002	1.000				
	40	0.133"	1.186	1.000	1.000			
	80	0.179"		1.000	1.000	1.000		
	160	0.250"				1.000	1.000	1.000
1½ (40)	10*s*	0.109"	1.340	1.000				
	40	0.145"	1.729	1.000	1.000			
	80	0.200"		1.155	1.000	1.000		
	160	0.281"				1.000	1.000	1.000
2 (50)	10*s*	0.109"	1.566	1.000				
	40	0.154"	2.147	1.091	1.000			
	80	0.218"		1.478	1.140	1.000		
	160	0.344"				1.000	1.000	1.000
2½ (65)	10*s*	0.120"	1.991	1.012				
	40	0.203"	3.218	1.635	1.261			
	80	0.276"		2.132	1.644	1.000		
	160	0.375"				1.000	1.000	1.000
3 (80)	10*s*	0.120"	2.284	1.160				
	40	0.216"	3.938	2.000	1.543			
	80	0.300"		2.673	2.062	1.000		
	160	0.438"				1.160	1.000	1.000
4 (100)	10*s*	0.120"	2.703	1.373				
	40	0.237"	5.126	2.604	2.009			
	80	0.337"		3.573	2.756	1.120		
	120	0.438"				1.403	1.000	1.000
	160	0.531"				1.643	1.000	1.000
6 (150)	10*s*	0.134"	3.681	1.870				
	40	0.280"	7.434	3.776	2.913			
	80	0.432"		5.618	4.334	1.761		
	120	0.562"				2.268	1.203	1.000
	160	0.719"				2.789	1.480	1.000

1 in = 25.4 mm

where T = wall thickness of large end, in
B = actual bend radius, in
R = mean radius of large end, in

ASME B31.1 Power Piping Code.[8] This code concerns nonnuclear piping such as that found in the turbine building of a nuclear plant or in a fossil-fuel power plant. Piping services include steam, water, oil, gas, and air. Design requirements

TABLE B4.3*i* SIFs for Typical Weldolet Branch Connections (Run Pipe Size: NPS 16 or DN 400)

Branch pipe			Run pipe, NPS 16 (DN 400)					
			Run pipe schedule					
			10	30	40	80	120	160
			Run pipe wall thickness					
NPS (DN)	Sch.	Thickness	0.250"	0.375"	0.500"	0.844"	1.219"	1.594"
1	10*s*	0.109"	1.025	1.000				
(25)	40	0.133"	1.213	1.000	1.000			
	80	0.179"		1.000	1.000			
	160	0.250"				1.000	1.000	1.000
1½	10*s*	0.109"	1.370	1.000				
(40)	40	0.145"	1.768	1.000	1.000			
	80	0.200"		1.181	1.000	1.000		
	160	0.281"				1.000	1.000	1.000
2	10*s*	0.109"	1.602	1.000				
(50)	40	0.154"	2.196	1.116	1.000			
	80	0.218"		1.512	1.000	1.000		
	160	0.344"				1.000	1.000	1.000
2½	10*s*	0.120"	2.037	1.035				
(65)	40	0.203"	3.291	1.672	1.034			
	80	0.276"		2.181	1.349	1.000		
	160	0.375"				1.000	1.000	1.000
3	10*s*	0.120"	2.337	1.187				
(80)	40	0.216"	4.028	2.047	1.265			
	80	0.300"		2.734	1.691	1.000		
	160	0.438"				1.000	1.000	1.000
4	10*s*	0.120"	2.765	1.405				
(100)	40	0.237"	5.243	2.664	1.647			
	80	0.337"		3.656	2.260	1.000		
	120	0.438"				1.179	1.000	1.000
	160	0.531"				1.380	1.000	1.000
6	10*s*	0.134"	3.766	1.913				
(150)	40	0.280"	7.605	3.864	2.389			
	80	0.432"		5.748	3.554	1.480		
	120	0.562"				1.905	1.028	1.000
	160	0.719"				2.343	1.264	1.000

1 in = 25.4 mm

of this code cover those for pipe, flanges, bolting, gaskets, valves, relief devices, fittings, and the pressure-containing portions of other piping components. It also includes hangers and supports and other equipment items necessary to prevent overstressing the pressure-containing components.

The loadings required to be considered are pressure; weight (live, dead, and under test loads); impact (e.g., water hammer); wind; earthquake (where applicable); vibration; and those loadings resulting from thermal expansion and contraction.

TABLE B4.3*j* SIFs for Typical Weldolet Branch Connections (Run Pipe Size: NPS 18 or DN 450)

Branch pipe			Run pipe, NPS 18 (DN 450)					
			Run pipe schedule					
			10	STD	XS	40	80	120
			Run pipe wall thickness					
NPS (DN)	Sch.	Thickness	0.250"	0.375"	0.500"	0.562"	1.938"	1.375"
1½	10*s*	0.109"	1.398	1.000				
(65)	40	0.145"	1.804	1.000	1.000			
	80	0.200"		1.205	1.000	1.000	1.000	1.000
	160	0.281"			1.018	1.000	1.000	1.000
2	10*s*	0.109"	1.634	1.000				
(50)	40	0.154"	2.241	1.139	1.000			
	80	0.218"		1.543	1.000	1.000	1.000	1.000
	160	0.344"			1.510	1.242	1.000	1.000
2½	10*s*	0.120"	2.078	1.056				
(65)	40	0.203"	3.358	1.706	1.055			
	80	0.276"		2.225	1.376	1.132	1.000	1.000
	160	0.375"			1.880	1.546	1.000	1.000
3	10*s*	0.120"	2.384	1.211				
(80)	40	0.216"	4.109	2.088	1.291			
	80	0.300"		2.790	1.725	1.419	1.000	1.000
	160	0.438"			2.388	1.965	1.000	1.000
4	10*s*	0.120"	2.821	1.433				
(100)	40	0.237"	5.349	2.718	1.681			
	80	0.337"		3.730	2.306	1.897	1.000	1.000
	120	0.438"			2.889	2.376	1.008	1.000
	160	0.531"			3.383	2.782	1.181	1.000
6	10*s*	0.134"	3.841	1.952				
(150)	40	0.280"	7.758	3.942	2.438			
	80	0.432"		5.865	3.627	2.983	1.266	1.000
	120	0.562"			4.669	3.840	1.629	1.000
	160	0.719"			5.743	4.723	2.004	1.055
8	10*s*	0.148"	4.887	2.483				
(200)	40	0.322"	8.106	5.237	3.239			
	80	0.500"			4.868	4.004	1.699	1.000
	120	0.719"			6.907	5.681	2.410	1.269
	160	0.906"			8.396	6.906	2.930	1.542

1 in = 25.4 mm

The design equations and stress limits are as follows (terms are the same as those for Class 2 and 3 piping except for those defined below):

1. *Stress due to sustained loads.* The effects of pressure, weight, and other sustained mechanical loads must meet the requirements of Eq. (B4.25):

$$S_L = \frac{P D_o}{4t} + \frac{0.75 i M_A}{Z} \le 1.0 S_h \tag{B4.25}$$

TABLE B4.3*k* SIFs for Typical Weldolet Branch Connections (Run Pipe Size: NPS 20 or DN 500)

Branch pipe			Run pipe, NPS 20 (DN 500)					
			Run pipe schedule					
			10*s*	20	XS	40	80	120
			Run pipe wall thickness					
NPS (DN)	Sch.	Thickness	0.218"	0.375"	0.500"	0.594"	1.031"	1.500"
1½	10*s*	0.109"	1.789	1.000				
(40)	40	0.145"	2.308	1.000	1.000			
	80	0.200"		1.227	1.000	1.000	1.000	1.000
	160	0.281"		1.675	1.036	1.000	1.000	1.000
2	10*s*	0.109"	2.091	1.000				
(50)	40	0.154"	2.867	1.159	1.000	1.000		
	80	0.218"		1.570	1.000	1.000	1.000	1.000
	160	0.344"			1.538	1.156	1.000	1.000
2½	10*s*	0.120"	2.659	1.075				
(65)	40	0.203"	4.296	1.737	1.074			
	80	0.276"		2.266	1.401	1.054	1.000	1.000
	160	0.375"			1.914	1.439	1.000	1.000
3	10*s*	0.120"	3.050	1.233				
(80)	40	0.216"	5.257	2.126	1.315			
	80	0.300"		2.840	1.756	1.321	1.000	1.000
	160	0.438"			2.432	1.829	1.000	1.000
4	10*s*	0.120"	3.608	1.459				
(100)	40	0.237"	6.843	2.767	1.711			
	80	0.337"		3.797	2.348	1.766	1.000	1.000
	120	0.438"			2.942	2.212	1.000	1.000
	160	0.531"			3.445	2.590	1.026	1.000
6	10*s*	0.134"	4.915	1.987				
(150)	40	0.280"	9.925	4.013	2.482			
	80	0.432"		5.971	3.693	2.777	1.100	1.000
	120	0.562"			4.754	3.575	1.417	1.000
	160	0.719"				4.397	1.742	1.000
8	10*s*	0.148"	6.252	2.528				
(200)	40	0.322"		5.332	3.297			
	80	0.500"			4.957	3.727	1.477	1.000
	120	0.719"					2.095	1.117
	160	0.906"					2.547	1.358

1 in = 25.4 mm

where S_L = sum of longitudinal stresses due to pressure, weight, and other sustained loads, psi.

2. *Stress due to occasional loads.* The effects of pressure, weight, other sustained loads, and occasional loads including earthquake must meet the requirements of Eq. (B4.26):

$$\frac{PD_o}{4t} + \frac{0.75i(M_A + M_B)}{Z} \leq kS_h \tag{B4.26}$$

TABLE B4.3*l* SIFs for Typical Weldolet Branch Connections (Run Pipe Size: NPS 24 or DN 600)

Branch pipe			Run pipe, NPS 24 (DN 600)					
			Run pipe schedule					
			10*s*	20	XS	40	80	120
NPS (DN)	Sch.	Thickness	Run pipe wall thickness					
			0.218"	0.375"	0.500"	0.594"	1.031"	1.500"
2	10*s*	0.109"	1.716	1.000				
(50)	40	0.154"	2.352	1.196	1.000			
	80	0.218"		1.620	1.002	1.000	1.000	1.000
	160	0.344"			1.586	1.000	1.000	1.000
2½	10*s*	0.120"	2.181	1.109				
(65)	40	0.203"	3.525	1.792	1.108			
	80	0.276"		2.337	1.445	1.000	1.000	1.000
	160	0.375"			1.974	1.161	1.000	1.000
3	10*s*	0.120"	2.502	1.272				
(80)	40	0.216"	4.314	2.193	1.356			
	80	0.300"		2.929	1.812	1.066	1.000	1.000
	160	0.438"			2.509	1.475	1.000	1.000
4	10*s*	0.120"	2.961	1.505				
(100)	40	0.237"	5.615	2.854	1.765			
	80	0.337"		3.916	2.423	1.425	1.000	1.000
	120	0.438"			3.035	1.785	1.006	1.000
	160	0.531"			3.553	2.090	1.178	1.000
6	10*s*	0.134"	4.033	2.050				
(150)	40	0.280"	8.143	4.139	2.560			
	80	0.432"		6.158	3.809	2.240	1.262	1.000
	120	0.562"			4.904	2.884	1.625	1.106
	160	0.719"				3.547	1.999	1.361
8	10*s*	0.148"	5.130	2.608				
(200)	40	0.322"		5.499	3.402			
	80	0.500"			5.113	3.007	1.695	1.153
	120	0.719"				4.266	2.404	1.636
	160	0.906"				5.186	2.923	1.989
10	10*s*	0.165"	7.197	3.659				
(250)	40	0.365"		7.865	4.865			
	80	0.594"			7.645	4.496	2.534	1.724
	120	0.844"				6.375	3.593	2.445
	160	1.125"				8.148	4.591	3.125

1 in = 25.4 mm

where k = 1.15 for occasional loads acting less than 10 percent of operating period; 1.2 for occasional loads acting less than 1 percent of operating period

3. *Thermal expansion stress range.* The effects of thermal expansion must meet the requirements of Eq. (B4.27):

$$\frac{iM_C}{Z} \leq S_A + f(S_h - S_L) \tag{B4.27}$$

TABLE B4.4*a* SIFs for Class 3000 Half-Couplings (Branch Pipe Schedule 40) (Run Pipe Size: NPS 1½ to 8 (DN 40 to 200))

Run pipe			Sch. 40 branch pipe size and thickness					
			Branch pipe size					
			½ (15)	¾ (20)	1 (25)	1¼ (32)	1½ (40)	2 (50)
			Branch pipe wall thickness					
NPS (DN)	Sch.	Thickness	0.109"	0.113"	0.133"	0.140"	0.145"	0.154"
1½ (40)	10*s*	0.109"	2.282	3.665	3.665	3.665	3.665	3.665
	40	0.145"	1.413	2.989	2.989	2.989	2.989	2.989
	80	0.200"	1.000	2.362	2.362	2.362	2.362	2.362
	160	0.281"	1.000	1.822	1.822	1.822	1.822	1.822
2 (50)	10*s*	0.109"	2.373	2.975	4.287	4.287	4.287	4.287
	40	0.154"	1.330	1.667	3.359	3.359	3.359	3.359
	80	0.218"	1.000	1.000	2.613	2.613	2.613	2.613
	160	0.344"	1.000	1.000	1.852	1.852	1.852	1.852
2½ (65)	10*s*	0.120"	2.089	2.619	3.614	4.580	4.580	4.580
	40	0.203"	1.000	1.085	1.497	3.161	3.161	3.161
	80	0.276"	1.000	1.000	1.000	2.528	2.528	2.528
	160	0.375"	1.000	1.000	1.000	2.008	2.008	2.008
3 (80)	10*s*	0.120"	2.161	2.710	3.739	4.624	5.249	5.249
	40	0.216"	1.000	1.012	1.397	1.728	3.480	3.480
	80	0.300"	1.000	1.000	1.000	1.000	2.747	2.747
	160	0.438"	1.000	1.000	1.000	1.000	2.073	2.073
4 (100)	10*s*	0.120"	2.257	2.829	3.904	4.828	5.583	6.239
	40	0.237"	1.000	1.000	1.250	1.546	1.788	3.893
	80	0.337"	1.000	1.000	1.000	1.000	1.000	3.030
	160	0.531"	1.000	1.000	1.000	1.000	1.000	2.168
6 (150)	10*s*	0.134"	2.005	2.513	3.469	4.289	4.960	6.250
	40	0.280"	1.000	1.000	1.012	1.251	1.447	1.823
	80	0.432"	1.000	1.000	1.000	1.000	1.000	1.000
	120	0.562"	1.000	1.000	1.000	1.000	1.000	1.000
8 (200)	10*s*	0.148"	1.776	2.227	3.073	3.800	4.394	5.537
	20	0.250"	1.000	1.000	1.280	1.583	1.830	2.306
	40	0.322"	1.000	1.000	1.000	1.037	1.199	1.510
	80	0.500"	1.000	1.000	1.000	1.000	1.000	1.000

1 in = 25.4 mm

4. *The requirement for the effects of any single nonrepeated anchor movement is not specified.*

ASME B31.3 Process Piping Code.[9] This code governs all piping within the property limits of facilities engaged in the processing or handling of chemical, petroleum, or related products. Examples are a chemical plant, petroleum refinery, loading terminal, natural gas processing plant, bulk plant, compounding plant, and tank farm. Excluded from the B31.3 code are piping carrying nonhazardous fluid with an internal gauge pressure less than 15 psi (103.5 kPa) and a temperature below 366°F (186°C); plumbing; sewers; fire protection systems; boiler external piping per B31.1 as well as pipelines per B31.4 or B31.8.

TABLE B4.4*b* SIFs for Class 3000 Half-Couplings (Branch Pipe Schedule 40) (Run Pipe Size: NPS 10 to 24 (DN 250 to 600))

Run pipe			Sch. 40 branch pipe size and thickness					
			Branch pipe size					
			½ (15)	¾ (20)	1 (25)	1¼ (32)	1½ (40)	2 (50)
			Branch pipe wall thickness					
NPS (DN)	Sch.	Thickness	0.109"	0.113"	0.133"	0.140"	0.145"	0.154"
10 (250)	10*s*	0.165"	1.538	1.928	2.660	3.290	3.804	4.793
	20	0.250"	1.000	1.000	1.329	1.644	1.901	2.395
	40	0.365"	1.000	1.000	1.000	1.000	1.010	1.272
	80	0.594"	1.000	1.000	1.000	1.000	1.000	1.000
12 (300)	10*s*	0.180"	1.369	1.716	2.368	2.928	3.386	4.267
	20	0.250"	1.000	1.000	1.368	1.692	1.957	2.466
	STD	0.375"	1.000	1.000	1.000	1.000	1.000	1.252
	40	0.406"	1.000	1.000	1.000	1.000	1.000	1.097
14 (350)	10	0.250"	1.000	1.007	1.390	1.719	1.988	2.505
	20	0.312"	1.000	1.000	1.000	1.187	1.373	1.730
	STD	0.375"	1.000	1.000	1.000	1.000	1.010	1.273
	40	0.438"	1.000	1.000	1.000	1.000	1.000	1.000
16 (400)	10	0.250"	1.000	1.030	1.422	1.759	2.034	2.562
	20	0.312"	1.000	1.000	1.000	1.215	1.405	1.770
	STD	0.375"	1.000	1.000	1.000	1.000	1.033	1.302
	40	0.500"	1.000	1.000	1.000	1.000	1.000	1.000
18 (450)	10	0.250"	1.000	1.051	1.451	1.794	2.075	2.614
	20	0.312"	1.000	1.000	1.002	1.239	1.433	1.806
	STD	0.375"	1.000	1.000	1.000	1.000	1.054	1.328
	30	0.438"	1.000	1.000	1.000	1.000	1.000	1.025
20 (500)	10	0.250"	1.000	1.070	1.477	1.826	2.112	2.661
	STD	0.375"	1.000	1.000	1.000	1.000	1.073	1.352
	30	0.500"	1.000	1.000	1.000	1.000	1.000	1.000
	40	0.593"	1.000	1.000	1.000	1.000	1.000	1.000
24 (600)	10	0.250"	1.000	1.103	1.523	1.883	2.178	2.744
	STD	0.375"	1.000	1.000	1.000	1.000	1.107	1.395
	XS	0.500"	1.000	1.000	1.000	1.000	1.000	1.000
	30	0.562"	1.000	1.000	1.000	1.000	1.000	1.000

1 in = 25.4 mm

The loadings required to be considered are pressure, weight (live and dead loads), impact, wind, earthquake-induced horizontal forces, vibration, discharge reactions, thermal expansion and contraction, temperature gradients, and anchor movements.

The governing equations are as follows:

1. *Stresses due to sustained loads.* The sum of the longitudinal stresses S_L due to pressure, weight, and other sustained loads must not exceed S_h (basic allowable stress at maximum metal temperature). The thickness of pipe used in calculating S_L shall be the nominal thickness minus mechanical, corrosion, and crosion allowances.

TABLE B4.4*c* SIFs for Class 3000 Half-Couplings (Branch Pipe Schedule 80) (Run Pipe Size: NPS 1½ to 8 (DN 40 to 200))

Run pipe			Sch. 80 branch pipe size and thickness					
			Branch pipe size					
			½ (15)	¾ (20)	1 (25)	1¼ (32)	1½ (40)	2 (50)
			Branch pipe wall thickness					
NPS (DN)	Sch.	Thickness	0.147"	0.154"	0.179"	0.191"	0.200"	0.218"
1½ (40)	10*s*	0.109"	2.841	3.665	3.665	3.665	3.665	3.665
	40	0.145"	1.759	2.989	2.989	2.989	2.989	2.989
	80	0.200"	1.024	2.362	2.362	2.362	2.362	2.362
	160	0.281"	1.000	1.822	1.822	1.822	1.822	1.822
2 (50)	10*s*	0.109"	2.954	3.792	4.287	4.287	4.287	4.287
	40	0.154"	1.655	2.124	3.359	3.359	3.359	3.359
	80	0.218"	1.000	1.184	2.613	2.613	2.613	2.613
	160	0.344"	1.000	1.000	1.852	1.852	1.852	1.852
2½ (65)	10*s*	0.120"	2.600	3.337	4.580	4.580	4.580	4.580
	40	0.203"	1.077	1.382	1.898	3.161	3.161	3.161
	80	0.276"	1.000	1.000	1.132	2.528	2.528	2.528
	160	0.375"	1.000	1.000	1.000	2.008	2.008	2.008
3 (80)	10*s*	0.120"	2.690	3.453	4.742	5.249	5.249	5.249
	40	0.216"	1.005	1.290	1.772	2.239	3.480	3.480
	80	0.300"	1.000	1.000	1.020	1.290	2.747	2.747
	160	0.438"	1.000	1.000	1.000	1.000	2.073	2.073
4 (100)	10*s*	0.120"	2.809	3.605	4.951	6.239	6.239	6.239
	40	0.237"	1.000	1.154	1.585	2.004	2.351	3.893
	80	0.337"	1.000	1.000	1.000	1.110	1.302	3.030
	160	0.531"	1.000	1.000	1.000	1.000	1.000	2.168
6 (150)	10*s*	0.134"	2.496	3.203	4.398	5.560	6.523	7.534
	40	0.280"	1.000	1.000	1.283	1.622	1.903	2.470
	80	0.432"	1.000	1.000	1.000	1.000	1.000	1.194
	120	0.562"	1.000	1.000	1.000	1.000	1.000	1.000
8 (200)	10*s*	0.148"	2.211	2.838	3.897	4.925	5.779	7.502
	20	0.250"	1.000	1.182	1.623	2.052	2.407	3.125
	40	0.322"	1.000	1.000	1.063	1.344	1.576	2.046
	80	0.500"	1.000	1.000	1.000	1.000	1.000	1.000

1 in = 25.4 mm

2. *Stresses due to occasional loads.* The sum of the longitudinal stresses due to pressure, weight, and other sustained loads and of the stresses produced by occasional loads such as earthquake or wind shall not exceed $1.33S_h$. Earthquake and wind loads need not be considered as acting simultaneously.
3. *Stress range due to expansion loads.* The displacement stress range S_E shall not exceed S_A:

$$S_E \leq S_A \tag{B4.28}$$

where $S_E = (S_b^2 + 4S_t^2)^{1/2}$

S_b = resultant bending stress, psi

$= [(i_iM_i)^2 + (i_oM_o)^2]^{1/2}/Z$

TABLE B4.4*d* SIFs for Class 3000 Half-Couplings (Branch Pipe Schedule 80) (Run Pipe Size: NPS 10 to 24 (DN 250 to 600))

Run pipe			Sch. 80 branch pipe size and thickness					
			Branch pipe size					
			½ (15)	¾ (20)	1 (25)	1¼ (32)	1½ (40)	2 (50)
			Branch pipe wall thickness					
NPS (DN)	Sch.	Thickness	0.147"	0.154"	0.179"	0.191"	0.200"	0.218"
10 (250)	10*s*	0.165"	1.914	2.457	3.373	4.264	5.003	6.494
	20	0.250"	1.000	1.227	1.685	2.130	2.499	3.245
	40	0.365"	1.000	1.000	1.000	1.132	1.328	1.724
	80	0.594"	1.000	1.000	1.000	1.000	1.000	1.000
12 (300)	10*s*	0.180"	1.704	2.187	3.003	3.796	4.453	5.781
	STD	0.375"	1.000	1.000	1.000	1.114	1.307	1.697
	40	0.406"	1.000	1.000	1.000	1.000	1.144	1.486
	80*s*	0.500"	1.000	1.000	1.000	1.000	1.000	1.049
14 (350)	10	0.250"	1.000	1.284	1.763	2.228	2.614	3.394
	STD	0.375"	1.000	1.000	1.000	1.132	1.328	1.724
	40	0.438"	1.000	1.000	1.000	1.000	1.024	1.330
	XS	0.500"	1.000	1.000	1.000	1.000	1.000	1.066
16 (400)	10	0.250"	1.023	1.313	1.803	2.279	2.674	3.472
	20	0.312"	1.000	1.000	1.246	1.575	1.847	2.398
	STD	0.375"	1.000	1.000	1.000	1.158	1.359	1.764
	40	0.500"	1.000	1.000	1.000	1.000	1.000	1.091
18 (450)	10	0.250"	1.044	1.340	1.840	2.325	2.728	3.542
	STD	0.375"	1.000	1.000	1.000	1.182	1.386	1.800
	30	0.438"	1.000	1.000	1.000	1.000	1.070	1.388
	40	0.562"	1.000	1.000	1.000	1.000	1.000	1.000
20 (500)	10	0.250"	1.062	1.364	1.873	2.367	2.777	3.605
	STD	0.375"	1.000	1.000	1.000	1.203	1.411	1.832
	30	0.500"	1.000	1.000	1.000	1.000	1.000	1.133
	40	0.593"	1.000	1.000	1.000	1.000	1.000	1.000
24 (600)	10	0.250"	1.096	1.406	1.931	2.441	2.864	3.718
	STD	0.375"	1.000	1.000	1.000	1.241	1.456	1.890
	XS	0.500"	1.000	1.000	1.000	1.000	1.000	1.169
	30	0.562"	1.000	1.000	1.000	1.000	1.000	1.000

1 in = 25.4 mm

M_i = in-plane bending moment, in · lb
M_o = out-of-plane bending moment, in · lb
i_i = in-plane stress intensification factor obtained from Fig. B4.5*a* (see also figure note 10)
i_o = out-of-plane stress intensification factor obtained from Fig. B4.5*a* (see also figure note 10)
S_t = torsional stress, psi
$= M_t/(2Z)$
M_t = torsional moment, in · lb

TABLE B4.4*e* SIFs for Class 6000 Half-Couplings (Branch Pipe Schedule 160) (Run Pipe Size: 1½ to 8 in (DN 40 to 200))

Run pipe			Sch. 160 branch pipe size and thickness					
			Branch pipe size					
			½ (15)	¾ (20)	1 (25)	1¼ (32)	1½ (40)	2 (50)
NPS (DN)	Sch.	Thickness	Branch pipe wall thickness					
			0.188"	0.219"	0.250"	0.250"	0.281"	0.344"
1½ (65)	10*s*	0.109"	2.763	3.664	3.665	3.665	3.665	3.665
	40	0.145"	1.711	2.459	2.989	2.989	2.989	2.989
	80	0.200"	1.000	1.431	2.362	2.362	2.362	2.362
	160	0.281"	1.000	1.822	1.822	1.822	1.822	1.822
2 (50)	10*s*	0.109"	2.873	4.128	4.287	4.287	4.287	4.287
	40	0.154"	1.610	2.313	2.979	3.359	3.359	3.359
	80	0.218"	1.000	1.290	1.661	2.613	2.613	2.613
	160	0.344"	1.000	1.000	1.852	1.852	1.852	1.852
2½ (65)	10*s*	0.120"	2.529	3.633	4.580	4.580	4.580	4.580
	40	0.203"	1.048	1.505	1.939	3.161	3.161	3.161
	80	0.276"	1.000	1.000	1.157	2.528	2.528	2.528
	160	0.375"	1.000	1.000	1.000	2.008	2.008	2.008
3 (80)	10*s*	0.120"	2.617	3.759	4.843	5.249	5.249	5.249
	40	0.216"	1.000	1.405	1.809	2.481	2.859	3.480
	80	0.300"	1.000	1.000	1.042	1.429	2.747	2.747
	160	0.438"	1.000	1.000	1.000	1.000	2.073	2.073
4 (100)	10*s*	0.120"	2.732	3.925	5.056	6.239	6.239	6.239
	40	0.237"	1.000	1.257	1.619	2.220	2.558	3.642
	80	0.337"	1.000	1.000	1.000	1.230	1.417	2.017
	160	0.531"	1.000	1.000	1.000	1.000	1.000	1.168
6 (150)	10*s*	0.134"	2.427	3.487	4.492	6.159	7.098	7.534
	40	0.280"	1.000	1.017	1.310	1.796	2.070	2.947
	80	0.432"	1.000	1.000	1.000	1.000	1.001	1.425
	120	0.562"	1.000	1.000	1.000	1.000	1.000	1.000
8 (200)	10*s*	0.148"	2.150	3.089	3.980	5.456	6.288	8.425
	20	0.250"	1.000	1.287	1.658	2.273	2.619	3.728
	40	0.322"	1.000	1.000	1.086	1.488	1.715	2.442
	80	0.500"	1.000	1.000	1.000	1.000	1.000	1.168

1 in = 25.4 mm

S_A = allowable displacement stress range
$= f(1.25S_c + 0.25S_h)$
$= f[1.25(S_c + S_h) - S_L]$ when $S_h > S_L$
S_c = basic allowable stress at minimum metal temperature, psi
f = stress range reduction factor per Table B4.2

ASME B31.4 Liquid Transportation Systems for Hydrocarbons, Liquid Petroleum Gas, Anhydrous Ammonia, and Alcohols Piping Code.[10] The scope of ASME B31.4, Liquid Transportation Systems for Hydrocarbons, Liquid Petroleum Gas, Anhydrous Ammonia, and Alcohols, governs piping transporting liquids such as

TABLE B4.4*f* SIFs for Class 6000 Half-Couplings (Branch Pipe Schedule 160) (Run Pipe Size: 10 to 24 in (DN 250 to 600))

Run pipe			Sch. 160 branch pipe size and thickness					
			Branch pipe size					
			½ (15)	¾ (20)	1 (25)	1¼ (32)	1½ (40)	2 (50)
			Branch pipe wall thickness					
NPS (DN)	Sch.	Thickness	0.188"	0.219"	0.250"	0.250"	0.281"	0.344"
10 (250)	10*s*	0.165"	1.862	2.674	3.445	4.723	5.444	7.749
	20	0.250"	1.000	1.336	1.721	2.360	2.720	3.872
	40	0.365"	1.000	1.000	1.000	1.254	1.445	2.057
	80	0.594"	1.000	1.000	1.000	1.000	1.000	1.000
12 (300)	10*s*	0.180"	1.657	2.381	3.067	4.205	4.846	6.898
	STD	0.375"	1.000	1.000	1.000	1.234	1.422	2.024
	40	0.406"	1.000	1.000	1.000	1.081	1.245	1.773
	80	0.687"	1.000	1.000	1.000	1.000	1.000	1.000
14 (350)	10	0.250"	1.000	1.398	1.800	2.468	2.845	4.050
	STD	0.375"	1.000	1.000	1.000	1.254	1.445	2.057
	40	0.438"	1.000	1.000	1.000	1.000	1.115	1.587
	60	0.594"	1.000	1.000	1.000	1.000	1.000	1.000
16 (400)	10	0.250"	1.000	1.430	1.842	2.525	2.910	4.142
	STD	0.375"	1.000	1.000	1.000	1.283	1.479	2.105
	40	0.500"	1.000	1.000	1.000	1.000	1.000	1.301
	60	0.656"	1.000	1.000	1.000	1.000	1.000	1.000
18 (450)	10	0.250"	1.015	1.458	1.879	2.576	2.969	4.226
	STD	0.375"	1.000	1.000	1.000	1.309	1.508	2.147
	30	0.438"	1.000	1.000	1.000	1.010	1.164	1.657
	40	0.562"	1.000	1.000	1.000	1.000	1.000	1.092
20 (500)	10	0.250"	1.033	1.485	1.912	2.622	3.022	4.302
	STD	0.375"	1.000	1.000	1.000	1.333	1.536	2.186
	30	0.500"	1.000	1.000	1.000	1.000	1.000	1.352
	40	0.593"	1.000	1.000	1.000	1.000	1.000	1.014
24 (600)	10	0.250"	1.066	1.531	1.972	2.704	3.116	4.436
	STD	0.375"	1.000	1.000	1.002	1.374	1.584	2.255
	30	0.562"	1.000	1.000	1.000	1.000	1.000	1.147
	40	0.687"	1.000	1.000	1.000	1.000	1.000	1.000

1 in = 25.4 mm

crude oil, condensate, natural gasoline, natural gas liquids, liquefied petroleum gas, liquid alcohol, liquid anhydrous ammonia, and liquid petroleum products between producers' lease facilities, tank farms, natural gas processing plants, refineries, stations, ammonia plants, terminals, and delivery and receiving points. Excluded from B31.4 are auxiliary piping such as water, air, steam, lubricating oil, gas, and fuel; piping with an internal gauge pressure at or below 15 psi (103.5 kPa) regardless of temperature; piping with an internal gauge pressure above 15 psi (103.5 kPa) and a temperature below −20°F (−29°C) or above 250°F (121°C); and piping for petroleum refinery, gas transmission and distribution, ammonia refrigeration, and so on, that is covered by other ASME B31 sections.

The limits of calculated stresses are as follows:

1. *Stresses due to sustained loads.* The sum of the longitudinal stresses due to pressure, weight, and other sustained external loads shall not exceed $0.75S_A$, where $S_A = 0.72S_y$ (specified minimum yield strength).
2. *Stresses due to occasional loads.* The sum of the longitudinal stresses produced by pressure, live and dead loads, and those produced by occasional loads, such as wind or earthquake, shall not exceed $0.8S_y$.
3. *Stresses due to expansion loads*
   - ***a.*** *Restrained lines.* The net longitudinal compressive stress due to the combined effects of temperature rise and fluid pressure shall be computed from the equation.

$$S_L = E\alpha(T_2 - T_1) - \nu S_H \qquad \text{(B4.29)}$$

where S_L = longitudinal compressive stress, psi
S_H = hoop stress due to fluid pressure, psi
T_1 = temperature at time of installation, °F
T_2 = maximum or minimum operating temperature, °F
E = modulus of elasticity, psi
α = linear coefficient of thermal expansion, in/(in · °F)
ν = Poisson's ratio = 0.30 for steel

Then the equivalent tensile stress is calculated as

$$S_{\text{eqiv}} = S_H + S_L < 0.9S_y \qquad \text{(B4.30)}$$

where S_{eqiv} = the equivalent tensile stress, psi. Beam bending stresses shall be included in the longitudinal stress for those portions of the restrained line which are supported aboveground.

   - ***b.*** *Unrestrained lines.* Stresses due to expansion for those portions of the piping without substantial axial restraint shall be combined in accordance with the following equation:

$$S_E = \left(S_b^2 + 4S_t^2\right)^{1/2} < S_A \qquad \text{(B4.31)}$$

where S_E = stress due to expansion, psi
$S_b = [(i_iM_i)^2 + (i_oM_o)^2]^{1/2}/Z$
= equivalent bending stress, psi
$S_t = M_t/(2Z)$ = torsional stress, psi
M_i = in-plane bending moment, in · lb
M_o = out-of-plane bending moment, in · lb
M_t = torsional moment, in · lb
i_i = in-plane stress intensification factor obtained from Fig. B4.5*a*
i_o = out-of-plane stress intensification factor obtained from Fig. B4.5*a*
Z = section modulus of pipe, in^3

ASME B31.5 Refrigeration Piping Code.[11] The scope of this code covers refrigerant and secondary coolant piping for temperatures as low as −320°F (196°C). Excluded from this code are piping designed for external or internal gauge pressure not exceeding 15 psi (103.5 kPa) regardless of size; water piping; and any self-contained or unit systems subject to the requirements of Underwriters' Laboratories or other nationally recognized testing laboratory.

The limits of calculated stresses are as follows:

1. *Stresses due to expansion loads.* The expansion stress range S_E shall not exceed the allowable stress range S_A:

$$S_E < S_A = f(1.25S_c + 0.25S_h) \tag{B4.32}$$

where S_E = expansion stress range = $(S_b^2 + 4S_t^2)^{1/2}$, psi
S_b = resultant bending stress
= $[(i_iM_i)^2 + (i_oM_o)^2]^{1/2}/Z$, psi
S_t = torsional stress = $M_t/(2Z)$, psi
M_i = in-plane bending moment, in · lb
M_o = out-of-plane bending moment, in · lb
M_t = torsional moment, in · lb
i_i = in-plane stress intensification factor obtained from Fig. B4.5*a*
i_o = out-of-plane stress intensification factor obtained from Fig. B4.5*a*
Z = section modulus of pipe, in^3
S_c = basic material allowable stress at minimum (cold) normal temperature, psi
S_h = basic material allowable stress at maximum (hot) normal temperature, psi
f = stress range reduction factor obtained from Fig. B4.5*d*

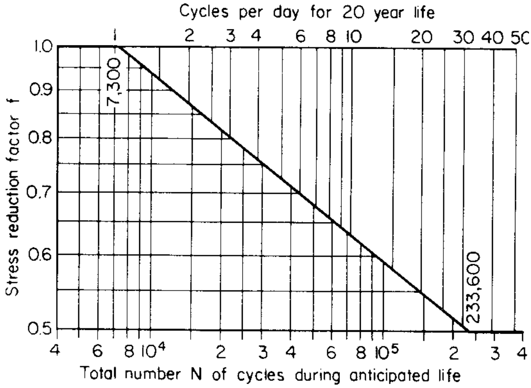

FIGURE B4.5*d* Stress range reduction factors. (*Extracted from Refrigeration Piping Code, ASME B31.5 1992. Courtesy of ASME.*)

2. *Stresses due to sustained loads.* The sum of the longitudinal stresses due to pressure, weight, and other sustained external loading S_L shall not exceed S_h. Where $S_L > S_h$, the difference $S_h - S_L$ may be added to the term in parentheses in Eq. (B4.32).
3. *Stresses due to occasional loads.* The sum of the longitudinal stresses produced by pressure, live and dead loads, and occasional loads, such as wind or earthquake, may not exceed $1.33S_h$. It is not necessary to consider wind and earthquake as occurring concurrently.

TABLE B4.5 Temperature Derating Factor *T* for Steel Pipe

Temperature, °F (°C)	Temperature derating factor *T*
250 or less (121.1 or less)	1.000
300 (148.9)	0.967
350 (176.7)	0.933
400 (204.4)	0.900
450 (233.2)	0.867

Note: For intermediate temperatures, interpolate for derating factor.

Source: ASME B31.8, 1995. *Gas Transmission and Distribution Piping Systems.* (*Courtesy of ASME.*)

ASME B31.8, Gas Transmission and Distribution Piping Code.[12] This code governs most of the pipelines in gas transmission and distribution systems up to the outlet of the customer's meter set assembly. Excluded from this code are piping with metal temperatures above 450°F (232.2°C) or below −20°F (−29°C); piping beyond the outlet of the customer's meter set assembly; piping in oil refineries or natural gas extraction plants, gas treating plants, and so on, which is covered by other ASME B31 codes; waste gas vent pipe operating at atmospheric pressures; and liquid petroleum transportation piping. The governing equations are as follows:

1. *Stresses due to pressure and external loads.* The sum of the longitudinal pressure stress and the longitudinal bending stress due to external loads such as weight, wind, and so on, S_L, shall not exceed $0.75S_y\,FT$:

$$S_L \leq 0.75 S_y F T \tag{B4.33}$$

where S_y = specified minimum yield strength, psi
T = temperature derating factor obtained from Table B4.5
F = construction-type design factor obtained from Table B4.6. The construction types are associated with the population density of the surrounding area as follows:
Type A: Sparsely populated areas such as deserts, mountains, and farmland
Type B: Fringe areas around cities or towns

TABLE B4.6 Values of Design Factor *F*

Construction type	Design factor *F*
A	0.72
B	0.60
C	0.50
D	0.40

Source: ASME B31.8, 1995. (*Courtesy of ASME.*)

Type C: Cities or towns with no buildings over three stories tall
Type D: Areas with taller buildings

2. *Stress range due to expansion loads.* The maximum combined expansion stress range S_E shall not exceed $0.72S_y$:

$$S_E = \left(S_b^2 + 4S_t^2\right)^{1/2} < 0.72S_y \tag{B4.34}$$

where S_b = resultant bending stress = iM_b/Z, psi
S_t = torsional stress = $M_t/(2Z)$, psi
M_b = resultant bending moment, in · lb
M_t = torsional moment, in · lb
i = stress intensification factor obtained from Fig. B4.5*a* (see figure note 10)
Z = section modulus of pipe, in^3

3. *Stresses due to pressure, external loads, and expansion loads.* The sum of the longitudinal pressure stress, the longitudinal bending stress due to external loads, and the combined stress due to expansion shall not exceed S_y.

STRESS INTENSIFICATION FACTORS (SIF) FOR NONSTANDARD FITTINGS

Stress intensification factors for fittings such as Wye (Y) connections and latrolets are not available in the current editions of codes. The following subsections provide data for obtaining appropriate SIFs for various nonstandard fittings.

SIF for 90-Degree Wye Connection

The following SIF (i) which can be used is based on a comparative finite element analysis study[13] of a Wye connection and a Tee connection. See Fig. B4.5*i*.

i for forged Wye connection = 1.0 (i of WTEE)

for all moments except for torsion and out-of-plane bending moment components from branch side

i_{ob} for forged Wye connection = 3.3 (i of WTEE)

for out-of-plane bending moment components from branch side

i_{tb} for forged Wye connection = 1.1 (i of WTEE)

for torsional moment components from branch side

Use UTEE (unreinforced tee) instead of WTEE (welding tee) in the above expressions if the Wye connection is a fabricated Wye.[13]

SIF for Weldolets, Sockolets, and Half-Couplings

$$i_r = 0.8\left(\frac{R}{T}\right)^{2/3} \frac{r}{R} \geq 2.1 \quad \text{(for run side)}$$

$$i_b = 1.5\left(\frac{R}{T}\right)^{2/3} \left(\frac{r}{R}\right)^{1/2} \frac{t}{T}\frac{r}{r_p} \geq 1.5 \quad \text{if } \frac{r}{R} \leq 0.9 \quad \text{(for branch side)}$$

$$i_b = 0.9\left(\frac{R}{T}\right)^{2/3} \frac{t}{T}\frac{r}{r_p} \geq 1.0 \quad \text{if } \frac{r}{R} = 1.0 \quad \text{(for branch side)}$$

For branch-side stresses, branch-side section modulus should be used.

For insert or contour weldolets, the coefficients in the above equations 0.8, 1.5, and 0.9 are replaced by 0.4, 0.75, and 0.45, respectively.

R, T = mean radius and wall thickness of run pipe
r, t = mean radius and wall thickness of branch pipe
r_p = outside radius of the reinforcement on nozzle or branch

The above equations are based on Refs. 14 and 15.

SIF for 45-Degree Latrolets

Forged latrolet: $i = 0.5727\ (R/T)^{2/3}$ based on $h = 1.97\ (T/R)$

Fabricated lateral: $i = 1.5378(R/T)^{2/3}$ obtained by multiplying the SIF of forged latrolet by $(4.4)^{2/3}$

See Ref. 16.

SIF for Reducers

Even though the reducer is a standard fitting and the formula for SIF is available in the codes,[17] the cone angle is not readily available. The following SIF formula from the codes can be used for large-bore concentric and eccentric reducers. Using data from Ref. 18, the following expressions can be used for the cone angle, α:

$$i = 0.5 + 0.01\alpha\left(\frac{d_2}{t_2}\right)^{0.5} \qquad (1.0 < i \leq 2.0)$$

$$\alpha_1 = \left(80.4\,\frac{D}{d}\right) - 62.9 \quad \text{for} \quad 1 < \frac{D}{d} < 1.3$$

$$\alpha_1 = \left(28.3\,\frac{D}{d}\right) + 2.9 \quad \text{for} \quad \frac{D}{d} \geq 1.3$$

$$\alpha = \frac{\alpha_1}{2} \quad \text{for concentric reducers}$$

$$\alpha = \alpha_1 \quad \text{for eccentric reducers}$$

where α = cone angle in degrees
D, d = mean diameter of large and small ends of reducer, respectively
d_2, t_2 = outside diameter and thickness of small end of reducer, respectively

See Refs. 17 and 18.

LOCAL STRESSES

In addition to the general pipe stresses (the pressure stress and the moment stress) as described in the previous sections, there are certain local pipe wall stresses produced by (1) restraint of the pipe radial thermal and internal pressure expansion of pipe-through-structural-steel type of anchors, (2) the transfer of load from the supporting surface to the pipe surface over a contact length along the axis of the pipe, or (3) attachments welded to pipe (e.g., lugs and trunnions).

Local Stresses and Code Requirements

The local stresses S_L, S_L^*, S_L^{**}, and S_L^{***} can be expressed as follows:

$$S_L,\ S_L^*,\ S_L^{**},\ \text{or}\ S_L^{***} = \max\left[|\sigma_1+\sigma_1'|,\ |\sigma_2+\sigma_2'|,\ |\sigma_2+\sigma_2'-(\sigma_1+\sigma_1')|\right] \qquad \text{(B4.35)}$$

where S_L = local stress due to deadweight, psi
S_L^* = local stress due to deadweight, seismic inertia, and other dynamic loads, psi
S_L^{**} = local stress due to thermal expansion and seismic anchor movement, psi
S_L^{***} = local stress due to concurrently acting loads, psi
σ_1 = longitudinal membrane stress, psi
σ_2 = circumferential membrane stress, psi
σ_2' = circumferential bending stress, psi
σ_1' = longitudinal bending stress, psi

Strictly speaking, the present piping codes give no specific limits for local stresses. As an industry practice, the calculated local stress is added to the general pipe stress and then compared with the pipe stress allowables specified by the applicable code. As an example, the total (general plus local) pipe stresses for ASME Class 2 and 3 piping shall satisfy the following equations [see Eqs. (B4.9), (B4.10), (B4.11), (B4.12) for definitions of symbols]:

1. *Design loading*

$$\frac{B_1 P D_o}{2t} + \frac{B_2 M_A}{Z} + \frac{2}{3} S_L \le 1.5 S_h \qquad \text{(B4.36)}$$

2. *Service loadings*

$$\frac{B_1 P_{\max} D_o}{2t} + \frac{B_2(M_A + M_B)}{Z} + \frac{2}{3} S_L^*$$

$$\leq \begin{cases} 1.85 S_h, \text{ but not greater than } 1.5 S_y \text{ for level A and B loadings} \\ 2.25 S_h, \text{ but not greater than } 1.8 S_y \text{ for level C loadings} \\ 3.0 S_h, \text{ but not greater than } 2.0 S_y \text{ for level D loadings} \end{cases} \qquad \text{(B4.37)}$$

3. *Sustained and thermal expansion loading:* Either of the following equations shall be satisfied:

$$\frac{i M_C}{Z} + \frac{1}{2} S_L^{**} \leq S_A \qquad \text{(B4.38)}$$

or

$$\frac{P D_o}{4t} + \frac{0.75 i M_A}{Z} + \frac{i M_C}{Z} + \frac{2}{3} S_L + \frac{1}{2} S_L^{**} \leq S_h + S_A \qquad \text{(B4.39)}$$

4. *Local stress limit loading*

$$S_L^{***} < 2.5 S_y \qquad \text{(B4.40)}$$

Local Stress Due to Restraint of Pipe Radial Expansion

The membrane and flexural stresses can be calculated as follows[19]:

$$\sigma_1 \text{ is negligible}$$

$$\sigma_1' = \frac{\pm 12 D \lambda^2 (\delta_{\widehat{P}} + \delta_T)}{t^2} \qquad \text{(B4.41)}$$

$$\sigma_2 = \frac{-(\delta_P + \delta_T) E}{R} + \nu \sigma_1 \qquad \text{(B4.42)}$$

$$\sigma_2' = \nu \sigma_1' \qquad \text{(B4.43)}$$

$$\delta_P = \frac{P R^2}{E t} \qquad \text{(B4.44)}$$

$$\delta_T = \alpha R \Delta T \qquad \text{(B4.45)}$$

where P = internal pressure of pipe, psi
R = pipe outside radius, in
E = modulus of elasticity of pipe, psi
t = pipe wall thickness, in
α = coefficient of thermal expansion of pipe, in/(in · °F)
ΔT = range of thermal expansion temperatures, °F
ν = Poisson's ratio

$$D = Et^3/[12(1 - v^2)]$$
$$\lambda = [3(1 - v^2)/(Rt)^2]^{1/4}$$

In the case of the local stress produced by restraint to the pipe radial expansion, $S_L = S_L^* = 0$. For fillet weld, $i = 2.1$ should be used. In addition, the stress check on limit loading is required. Here, $S_L^{***} = S_L^{**}$.

Local Stress Due to Contact

The membrane and flexural stresses can be calculated as follows[19]:

1. *For line contact*

$$\sigma_1 = -0.52F(R_m)^{1/4}L^{-1/2}t^{-7/4} \tag{B4.46}$$

($Note$: σ_1' is considered to be included in this equation.)

$$\sigma_2 = -0.496F(R_m)^{3/4}L^{-3/2}t^{-5/4} \tag{B4.47}$$

$$\sigma_2' = \pm 2\sigma_1 \tag{B4.48}$$

where F = support load, lb
R_m = mean radius of pipe, in
L = contact length, in
t = pipe wall thickness, in

2. *For point contact.* σ_1 and σ_1' are negligible compared to $\sigma_2 + \sigma_2'$:

$$\sigma_2 = \frac{0.4F}{t^2} \tag{B4.49}$$

$$\sigma_2' = \frac{2.4F}{t^2} \tag{B4.50}$$

3. In the case of contact stress, the minimum nominal general pipe stress (i.e., the unintensified general pipe stress) may be used in Eqs. (B4.36) to (B4.39) to calculate the total pipe stress. In addition, the stress check on limit loading is not required.

Other Types of Local Stresses

The two types of local stresses previously described are commonly encountered by stress analysts. Detailed descriptions and analysis methods for other types of local stresses such as the local stresses at integral welded attachments to pipe (e.g., lugs and trunnions) can be found in technical publications, *Welding Research Council Bulletins 107 and 198,* and ASME Code Cases.[21–23]

ANALYSIS OF INTEGRAL WELDED ATTACHMENTS (IWA)

Integral Welded Attachments are often used to support piping systems. The local stresses in the piping at IWA locations are commonly evaluated using the Welding

Research Council (WRC) Bulletin #107 approach,[21] which is based on Bijlaard's work. Generally, the various methods for local stress evaluations can be categorized in accordance with the following list. (Friction-induced loads due to weight and thermal expansion, if applicable, should be included.)

1. Stress intensification factor (SIF) approach for certain configurations
2. WRC Bulletin #107 approach with limitation on β (attachment parameter) and γ (shell parameter) parameters
3. ASME Code cases approach
4. Approach based on utilization of any available finite element analysis (FEA) results or published data
5. Rigorous FEA approach

SIF Approach

In this method, the local stresses are not evaluated directly but are indirectly accounted for by applying a SIF to the general piping stresses.

The SIF approach has the following limitations:

- Applicable to some specific IWA configurations only
- Not applicable to lugs, irregular shapes, and so forth

The SIF approach is applicable in the following situations:

- *360° (full) wrapper plates.* This configuration is no longer a local stress problem. A SIF (i) of 2.1 or 1.3 can be applied, depending on the applicable code.
- *180° wrapper plates.* The following SIFs are recommended by Rodabaugh (see Fig. B4.5*e*):

  $i = 4.2$ for the run pipe torsional moment (M_{tr}) component

  $i = 2.1$ for the run pipe out-of-plane bending moment (M_{obr}) component

  $i = 1.3$ for the run pipe in-plane bending moment (M_{ibr}) component
- *Circular trunnion/stanchions on straight pipe.* Consider the configuration as a

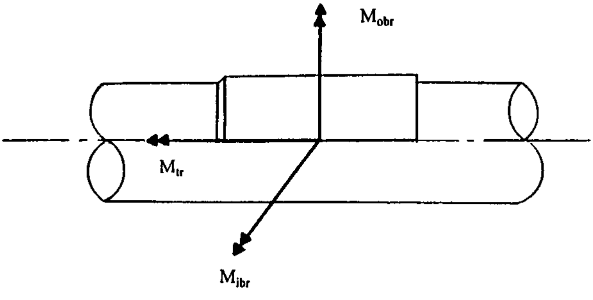

FIGURE B4.5*e* 180° wrapper plate (IWA).

reinforced tee (RTEE) and intensify the general piping stresses using a SIF (*i*) of RTEE per the applicable code requirements. Since there is no hole made in the pipe's pressure boundary, the run pipe thickness can be considered as a reinforcement. If there is a pad, the pad thickness can be considered as an additional reinforcement. Of course, the codes limit the effective thickness of reinforcement $[(t_e)_{\max} = 1.5 \times t]$.

- *Attachments on fittings.* Cross multiplication of SIFs (for example, a round attachment on elbow or on a tee) can be used (elbow SIF × RTEE SIF or TEE SIF × RTEE SIF).

WRC Bulletin #107 Approach

This is based on the analytical work performed by Professor P. P. Bijlaard of Cornell University and subsequently generated experimental data. The results are presented in WRC Bulletin #107 (WRC-107) as nondimensional curves based on β and γ parameters for three different types of loading. The local stresses can be evaluated by hand by filling out the computation sheets for local stresses as given in the WRC-107 bulletin or utilization of commercially available computer program software which has stored the nondimensional curves as digitized data. The WRC-107 method generally yields conservative results. The following additional information relates to this approach:

- *Basis.* Bijlaard's approach is based on shell theory and some simplifications for radial load (P), longitudinal moment (M_L), and circumferential moment (M_C).
- *Strength-of-materials formulas.* Simple strength-of-materials formulas are used to compute shear stresses due to longitudinal shear load (V_L), circumferential shear load (V_C), and torsional moment (M_T) loadings.
- *Shell and attachment parameters and loadings.* The shell, attachment parameters, and loadings are as follows (see Figs. B4.5*f* and B4.5*g*):

  shell parameter $\gamma = D_m/(2T)$ where $D_m = D_o - T$

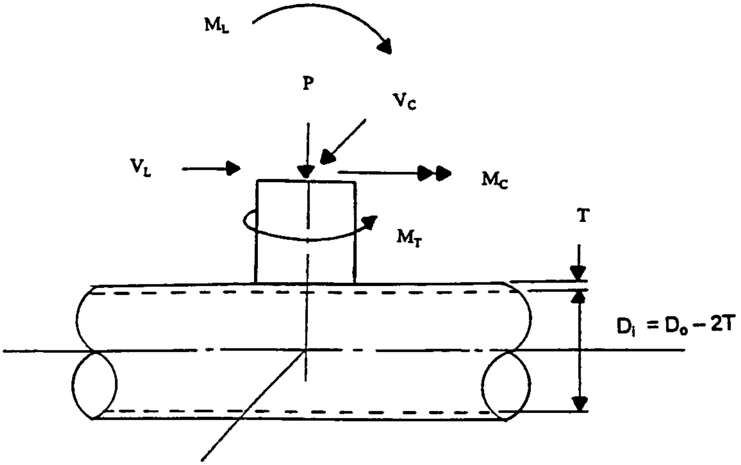

FIGURE B4.5*f* IWA notations.

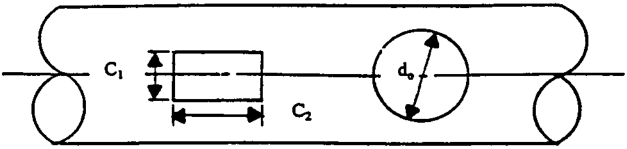

FIGURE B4.5g IWA notations (*continued*).

attachment parameter (β):

For circular attachment $\beta = 0.875\ (d_o/D_m)$

For square or rectangular attachment

$$\beta_1 = C_1/D_m$$

$$\beta_2 = C_2/D_m$$

Caution: WRC-107 uses C_1 and C_2 to represent one-half of the attachment dimensions in circumferential and longitudinal directions, while here C_1 and C_2 are used for the full attachment dimensions.

- *Limitations.* The WRC Bulletin #107 approach has the following limitations:

$0.01 \leq \beta \leq 0.5$

$5 \leq \gamma \leq 300$

$1/4 \leq \beta_1/\beta_2 \leq 4$ for M_c

$1/4 \leq \beta_2/\beta_1 \leq 4$ for M_L

- *Shear stresses.* The formulas for shear stress calculations are as follows:

	Square/rectangular IWA	Circular IWA
V_L	$\tau = V_L/(2C_2T)$	$\tau = 2V_L/(\pi d_o T)$
V_C	$\tau = V_C/(2C_1T)$	$\tau = 2V_C/(\pi d_o T)$
M_T	$\tau = M_T/F^*$ (see Ref. 22)	$\tau = 4M_T/[2\pi(d_o)^2T]$

*

$$F = \text{larger of } \begin{cases} T\{[C_{\max} + C_{\min}](C_{\min}/2)\}; \text{ or} \\ \{[1.57 + 0.093(C_{\max}/C_{\min})](C_{\min})^2(C_{\max})/8\} \end{cases}$$

where $C_{\max}$ = maximum of C_1 and C_2
$C_{\min}$ = minimum of C_1 and C_2

- *Attachments on elbows.* To evaluate local stresses in elbows with attachments, the following approach can be utilized. Attachment loads (P', M_L', M_C') can be resolved at the elbow/attachment interface to components P, V_L, M_C, M_T, M_L.

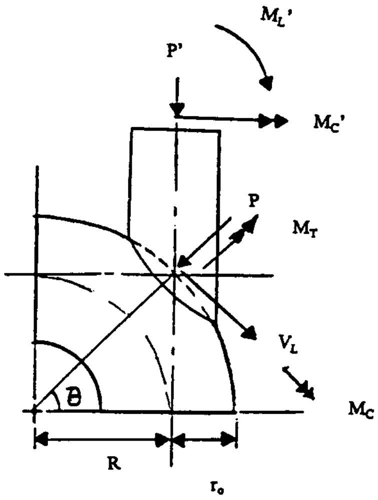

$P = P' \sin\theta$; $V_L = P' \cos\theta$

$M_L = M'_L$

$M_C = M_C' \sin\theta$; $M_T = M_C' \cos\theta$

Where; $\cos\theta = R / (R + r_o)$; R = radius of Elbow;
r_o = Outside radius of Pipe

FIGURE B4.5*h* IWA on elbow.

An equivalent straight pipe with the attachment and resolved loads can be considered in local stress evaluation using WRC-107 (see Fig. B4.5*h*).

Approach Based on ASME Code Cases

The Welding Research Council (WRC) Bulletin #198[22] fitted equations with some inherent conservatism to curves of WRC Bulletin #107. The results are published as ASME Code cases. Interested readers can refer to the ASME Code cases listed in the following table[23] for details and limitations of their applicability. Generally speaking, the local stress results from Code cases are more conservative than WRC Bulletin #107 results.

	ASME Code Class 1	ASME Code Classes 2 and 3
Rectangular attachments	Code Case # N-122 (1745)	Code Case # N-318
Hollow circular attachments	Code Case # N-391	Code Case # N-392

Approach Based on Available FEA Results

For some commonly utilized configurations and sizes, FEA was performed and the results were compared with WRC-107 results. Reduction factors are supplied relative to WRC-107 results. See Ref. 24.

Based on extensive finite element analysis studies of certain sizes, shapes, and configurations of attachments, the factors in the following tables are generated. The P, M_L, M_C loads can be reduced by dividing them with the applicable factors, and then the WRC-107 approach can be used. The γ value should be limited to the following range: $3.5 \le \gamma \le 31.5$.

Factors for Attachments on Straight Pipe

		P		M_L		M_C	
		σ_m	$\sigma_m + \sigma_b$	σ_m	$\sigma_m + \sigma_b$	σ_m	$\sigma_m + \sigma_b$
Small attachments $\beta \le 0.5$	S	1.23	1.28	1.11	1.36	1.00	1.21
	C	1.56	2.25	1.03	1.42	1.00	1.46
	R	1.17	1.46	1.08	1.36	1.00	1.32
	R (Note 1)	1.00	1.46	1.00	1.36	0.42	1.32
Large attachments $0.5 < \beta \le 0.7$ Note 2	R	1.80	1.50	1.25	2.02	1.15	1.89
	C	1.30	1.99	1.00	1.35	0.74	1.47
Large attachments $\beta > 0.7$ Note 2	R	1.81	2.58	1.94	3.53	1.70	2.41
	C	2.29	3.33	1.80	2.57	1.23	2.22
Large attachments $\beta > 0.7$ and extending 180° circumferentially Note 2	R	3.6	4.0	4.61	4.86	7.52	19.04
	C	1.07	2.12	7.77	14.57	3.87	15.14

Notes: 1. Factors for rectangular attachments when $3.5 \le \gamma < 5$ and $\beta \le 0.5$.

2. Apply these factors to the loads when actual $\beta > 0.5$ and evaluate the local stress based on WRC-107 utilizing artificially reduced attachment size to correspond to $\beta = 0.5$.

Notation: S: square attachments

R: rectangular attachments

C: circular attachments

σ_m: membrane stress

σ_b: bending stress

P: radial load

M_L: longitudinal moment

M_C: circumferential moment

See ASME paper listed in Ref. 24.

Factors for Circular Attachments on Long-Radius Elbows

	P		M_L		M_C	
	σ_m	$\sigma_m + \sigma_b$	σ_m	$\sigma_m + \sigma_b$	σ_m	$\sigma_m + \sigma_b$
$0.5 < d_o/D_o \leq 0.8$	2.00	3.60	1.53	2.66	1.61	2.87
$0.8 < d_o/D_o \leq 1$	3.14	4.88	2.42	3.53	2.52	4.37

Notes: Apply these factors to the loads (divide the loads by these factors) and perform WRC-107 evaluation using attachment size reduced to correspond to $\beta = 0.5$.

Notation: d_o: outside diameter of circular attachment

D_o: outside diameter of pipe

See ASME paper listed in Ref. 24.

Rigorous FEA Approach

For this approach, a 3-D finite-element model of the shell and attachment has to be built. A portion of the pipe, attachment, and pipe/attachment interface can be modeled and loadings applied. FEA analysis can be performed and the local stresses can be evaluated.

Although cumbersome and time-consuming, FEA is becoming a viable option due to the availability of commercial FEA software which can run on personal computer platforms. Personal computers have become very powerful tools.

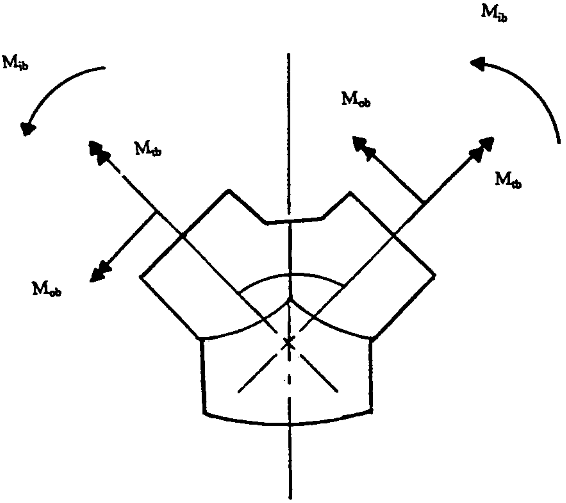

FIGURE B4.5*i* Wye connection.

TYPES OF PIPE LOADING CONDITIONS

1. *Types of loads.* As previously mentioned in the subsection ''Classification of Loads,'' piping loads are classified into three types: *sustained loads, occasional loads,* and *expansion loads.* These three types of loads and the corresponding analysis will be discussed in this section in detail.
2. *Method of analysis.* The piping stress analysis to be performed could be a simplified analysis or a computerized analysis. The choice of the proper analysis depends on the pipe size and the piping code. For small (nominal diameter 2 in and under) pipe except nuclear Class 1 pipe, a cookbook-type, simplified analysis could be performed. For nuclear Class 1 piping, since the requirements are more stringent, a computerized analysis is required. A detailed description of a cookbook-type, simplified analysis and a brief description of a computerized analysis are given in the section that follows, ''Methods of Analysis.'' Generally, before computerized analysis is performed, pipe supports may be located using the cookbook method.

Sustained Load: Pressure

Internal pressure in piping usually induces stresses in the pipe wall rather than loads on the pipe supports. This is because pressure forces are balanced by tension in the pipe wall, resulting in zero pipe support loadings. A discussion of unbalanced forces in the pipe created by pressure waves during fluid transients is given in the subsection ''Dynamic Loads.''

Pressure Stress. The longitudinal stress developed in the pipe due to internal pressure can be calculated as follows:

$$S_{LP} = \frac{PD}{4t}$$

or

$$S_{LP} = \frac{Pd^2}{D^2 - d^2} = P\left(\frac{A_f}{A_m}\right) \tag{B4.51}$$

where S_{LP} = longitudinal stress, psi
P = internal design pressure, psig
D = outside diameter, in
d = inside diameter, in
A_f = flow area, in^2
A_m = metal area, in^2
t = pipe wall thickness, in

The second equation gives pressure stress in terms of the ratio of pipe flow area to metal area. It also provides a more accurate result. Both equations are acceptable to the code.

Expansion Joint. In piping design, elbows, bends, and pipe expansion loops normally provide adequate flexibility for piping thermal expansion and contraction. However, in some cases this flexibility may not be adequate. As a solution, expansion joints may be used to absorb the expansion and contraction of pipe.

In general, expansion joints are used for the following applications:

1. Where thermal movements would induce excessive stress in normal piping arrangements
2. Where space is inadequate
3. Where reactions transmitted by pipe supports or anchors create large loads on supporting structures
4. Where reactions to equipment terminals are in excess of allowables

When expansion joints are used in piping, the pressure forces can no longer be balanced by tension in the pipe wall, and the pressure forces will be resisted by pipe supports and anchors.

There are many types of expansion joints available, ranging from a piece of rubber hose to metal bellows. The metal bellows expansion joint is most commonly used for power or process piping. Figure B4.6 shows the various components of a bellows expansion joint.

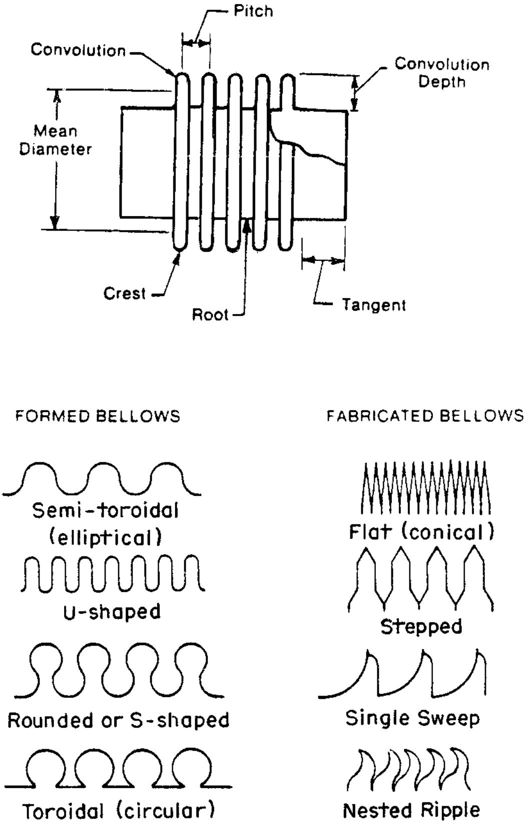
Pitch
Convolution
Convolution Depth
Mean Diameter
Crest
Root
Tangent
FORMED BELLOWS
FABRICATED BELLOWS
Semi-toroidal (elliptical)
Flat (conical)
U-shaped
Stepped
Rounded or S-shaped
Single Sweep
Toroidal (circular)
Nested Ripple

FIGURE B4.6 Bellows expansion joints.

Expansion joints do not have the capability to transmit large pressure forces. Restraints are usually installed on both sides of the expansion joint to prevent the pressure force from pulling the joint apart. The pressure force developed in the expansion joint is equal to the internal pressure times the maximum cross-sectional area over which it is applied. Since an expansion joint increases the flexibility of a piping system, the flexibility (spring rate) of the expansion joint should be incorporated in the piping stress analysis. Typical axial spring rates of bellows can be found in Ref. 25.

Sustained Load: Weight

The total design weight load of pipe supports includes the weight of the pipe, fittings, insulation, fluid in pipe, piping components such as valves, valve operators, flanges, and so on, and the supports themselves. Supports should be located as specified in Chap. B5.

Hydrotest and Other Occasional Loadings. To assure the integrity and leak tightness of a piping system designed to Section III of ASME Boiler and Pressure Vessel Code or ASME B31.1, the codes require that a pressure test be performed prior to placing the system in service. The most commonly used test is the hydrostatic test. When a steam or gas piping system is to be hydrotested, the effects of the weight of the water on the system and its supports must be considered. A hydroweight stress analysis should be performed to assure that the pipe supports, which have been designed for the normal operating condition, are able to withstand the hydrotest loads. If permanent supports cannot withstand these hydrotest loads, temporary supports may be added. Spring supports are available with hydrostatic test stops, which, in effect, transform the units into rigid supports.

Whether or not required by code, other conditions, such as the added weight of a cleaning medium of density greater than that of the process fluid, must be considered in a manner similar to that discussed above. Both dynamic and static loading analyses may be impacted by flushing and blowing-out activities during construction or after major rework.

Thermal Expansion Loads

For weight analysis, the more pipe supports installed, the lower the stress developed in the pipe. However, the opposite is true for the case of piping thermal expansion. When thermal expansion of the piping due to fluid or environmental temperature is restrained at supports, anchors, equipment nozzles, and penetrations, large thermal stresses and loads are caused.

Thermal Modes. Piping systems are generally analyzed for one thermal condition or mode, that is, the maximum operating temperature. However, piping systems that have more than one operating mode with different operating temperatures concurrently in different parts of the piping system should be analyzed for these operating thermal modes.

With the aid of system flow diagrams or *piping and instrumentation drawings (P&ID),* the stress analyst can determine the thermal modes required for a particular piping system. For B31.1 piping and ASME Class 2 and 3 piping, the required thermal modes can be determined by using good engineering judgment in selecting the most severe thermal conditions. For ASME Class 1 piping, the required thermal modes can be determined by examining the load histograms specified in the design specification.

Free Thermal Analysis. During the initial stage of piping analysis, an unrestrained (i.e., no intermediate pipe supports) or free thermal analysis may be performed. This analysis is performed for the worst thermal mode and includes only terminal points such as penetrations, anchors, and equipment nozzles. The result of this free thermal analysis usually gives useful information, which can be utilized by the stress analyst in the later stages of the piping analysis. Generally, a resulting thermal expansion stress < 10 ksi (68,948 kPa) means adequate flexibility exists in the piping system. The piping locations with low resulting thermal displacements would be good locations where rigid supports may be installed without adversely affecting the flexibility of the piping system. The resulting equipment nozzle loads could be used to evaluate the capabilities of the equipment for meeting the equipment manufacturer's nozzle allowables.

Imposed Thermal Movements. Thermal expansion of equipment causes displacements in the attached piping. Thermal stresses may also be caused due to thermal anchor movements at terminal ends and intermediate restraints. Therefore, appropriate thermal analysis for thermal anchor movements relating to the respective thermal modes should also be performed. Sometimes, it is possible for thermal anchor movements to exist when the piping is cold. In such cases, analysis in the cold condition, with only the thermal anchor movements as input, may be required.

LOCA Thermal Analysis. In nuclear power plants, following a *loss-of-coolant accident (LOCA),* the containment (the building structure designed to contain fission products) expands due to the rise in temperature and pressure inside the containment. This containment thermal growth results in large containment penetration anchor movements which affect the connected piping. It is not required to qualify the piping for this faulted condition. Thermal analysis for these LOCA anchor movements is used only for the evaluation of flanges, equipment nozzle loads, and pipe support loads.

Temperature Decay. For piping systems having a portion of the system with stagnant branch lines (dead legs) as shown in Fig. B4.7, it is necessary to consider

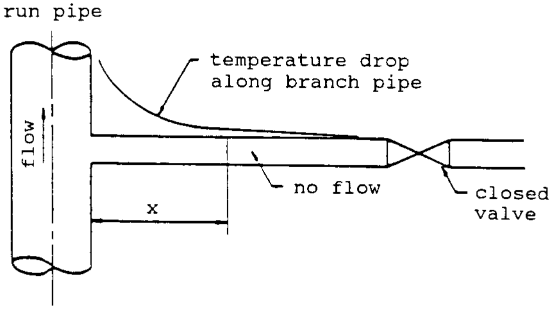

FIGURE B4.7 Temperature decay at dead leg.

the temperature decay in the piping. One simple approach to this temperature attenuation problem is as follows:

1. For a piping system with water, the temperature of the branch pipe is assumed to be the same as the run pipe up to a length equivalent to 10 times the inside pipe diameter. The remaining portion of the branch pipe may be considered at ambient temperature.
2. For a piping system with steam or gas, the temperature of the branch pipe is considered the same as the run pipe up to the closed valve.

For cases such as thermal transient analysis of ASME Class 1 piping, where a more accurate temperature profile along the branch pipe may be required, the approach described in Ref. 26 should be used.

Stress Ranges. The thermal stresses developed in the pipe are in fact ''stress ranges,'' that is, the difference between the unit thermal expansion for the highest operating temperature and for the lowest operating temperature.

For piping systems that do not experience temperatures below ambient temperature, the stress range is the difference between the unit expansion for the maximum thermal mode and that for 70°F (21°C). (See later subsection ''Seismic Anchor Movement and Building Settlement Analysis.'')

For systems with supply from a pool or river which might go below 70°F (21°C) in the winter, negative coefficients of expansion should be considered in evaluating the stress range.

Occasional Loads: Seismic

The code of Federal Regulation 10CFR Part 50 requires that safety-related piping in nuclear power plants be designed to withstand seismic loadings without loss of capability to perform their function.[27] For nonnuclear piping in regions of high seismic activity, this design requirement should also be considered.

OBE and SSE. Nuclear piping systems and components classified as Seismic Category I are designed to withstand two levels of site-dependent hypothetical earthquakes: the *safe-shutdown earthquake* (*SSE*) and the *operational-basis earthquake* (*OBE*).[28]

For conservatism, the OBE must usually be equal to at least one-half of the SSE. Their magnitudes are expressed in terms of the gravitational acceleration g. Their motions are assumed to occur in three orthogonal directions: one vertical and two horizontal.

Seismic Category I systems are defined as those necessary to assure:

1. The integrity of the reactor coolant pressure boundary
2. The capability to shut down the reactor and maintain it in a safe shutdown condition
3. The capability to prevent or mitigate potential off-site radiation exposure

Types of Seismic Analysis. Generally, piping seismic analysis is performed through one of three methods: *time-history analysis, modal response spectrum analysis,* or *static analysis.*

The equation of motion for a piping system subjected to an externally applied loading (seismic excitation) may be expressed as

$$M\ddot{\mathbf{x}} + C\dot{\mathbf{x}} + K\mathbf{x} = \mathbf{f} \tag{B4.52}$$

where M = mass matrix of system
C = damping matrix
K = stiffness matrix
$\ddot{\mathbf{x}}$ = acceleration vector
$\dot{\mathbf{x}}$ = velocity vector
$\mathbf{x}$ = displacement vector
$\mathbf{f}$ = external loading vector, function of time

This equation could be solved by time-history analysis.

Time-History Analysis. Time-history analysis is based on hypothetical earthquake data in the form of ground displacement, velocity, or acceleration versus time. The piping system is represented by lumped masses connected by massless elastic members. The analysis is performed on this mathematical model by the direct numerical integration method.[29,30] At each time step, the piping stresses, displacements, and restraint loads are calculated. Time history simulates the behavior of the piping system during the seismic excitation. The main advantage of time-history analysis is that analytically it is more accurate and less conservative compared to other approaches. The main disadvantages of time-history analysis are the excessive computational time required and the difficulty of obtaining a realistic earthquake input time function.

Modal Response Spectrum Analysis. The seismic response spectrum is a plot of the maximum acceleration response of a number of idealized single-degree-of-freedom oscillators attached to the floor (structure) with certain damping.

These response spectra are based on design response spectra and specified maximum ground accelerations of the plant site. Usually, a series of curves with different damping values for operating and design basis earthquakes for each orthogonal direction are generated, as shown in Fig. B4.8.

In the modal response spectrum analysis, the piping system is idealized as lumped masses connected by massless elastic members. The lumped masses are carefully located to adequately represent the dynamic properties of the piping system.

After the stiffness and mass matrix of the mathematical model are calculated, the natural frequencies of the piping system and corresponding mode shapes for all significant modes of vibration are also determined using the following equation:

$$\left(K - W_n^2 M\right)\phi_n = 0 \tag{B4.53}$$

where K = stiffness matrix
W_n = natural circular frequency for the nth mode
M = mass matrix
ϕ_n = mode shape matrix for the nth mode

The modal spectral acceleration taken from the appropriate response spectrum is then used to find the maximum response of each mode:

$$(Y_n)_{\max} = \frac{\phi_n^t M D S a_n}{W_n^2 M_n} \tag{B4.54}$$

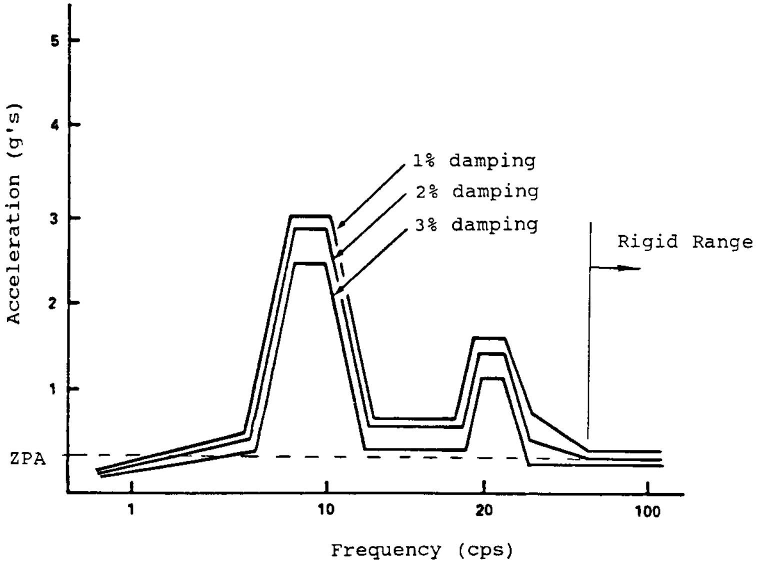

FIGURE B4.8 Response spectrum curves.

where Sa_n = spectral acceleration value for the nth mode
D = earthquake direction coefficient
ϕ_n^t = transpose of the nth mode shape
M_n = generalized mass of the nth mode
Y_n = generalized coordinate for the nth mode

Using the maximum generalized coordinate for each mode, the maximum displacements, the effective inertia forces, the effective acceleration, and the internal forces and moments associated with each mode are calculated as follows:

$$X_n = \phi_n (Y_n)_{\max}$$

$$F_n = K X_n$$

$$a_n = M^{-1} F_n$$

$$L_n = b F_n \tag{B4.55}$$

where X_n = displacement matrix due to nth mode
F_n = effective inertia force matrix due to nth mode
a_n = effective acceleration matrix due to nth mode
M^{-1} = the inverse of mass matrix
L_n = internal force and moment matrix due to nth mode
b = force transformation matrix

These modal components are then combined by the appropriate method (see later subsection "Methods for Combining System Responses") to obtain the total displacements, accelerations, forces, and moments for each point in the piping system.

Two types of response spectrum analyses can be performed depending on the pipe routing and attachments to buildings and structures.

Single-Response Spectrum Analysis. This type of analysis is performed using an enveloped response spectrum curve that covers all buildings and elevations to which the piping system is attached.

Multiple-Response Spectrum Analysis. This type of analysis is used where the piping is attached to various buildings or structures that have a wide variation in the amplitude or frequency of accelerations. In such cases, various response spectra curves may be applied at corresponding support and anchor points in the piping system.[31,32]

Static Analysis. Static analysis may be used to evaluate power piping or some piping systems in nuclear power plants. It is performed by analyzing a piping system for the statically applied uniform load equivalent to the site-dependent earthquake accelerations in each of the three orthogonal directions. All rigid restraints and snubbers supporting the pipe in the direction of the earthquake acceleration are included in the analysis. The total seismic effect is obtained by combining the results of the three directions.

The minimum earthquake force for structures described in ANSI A58.1[33] is also one form of static seismic analysis. The code recommends that a lateral seismic force will be assumed to act nonconcurrently in the direction of each of the main axes of the structure in accordance with the formula:

$$V = ZIKCSW \tag{B4.56}$$

where V = lateral seismic force, lb

Z = numerical coefficient, dependent upon the earthquake zone (see Fig. B4.9), 0.1 for Zone 0, 0.25 for Zone 1, 0.50 for Zone 2, and 1.00 for Zone 3

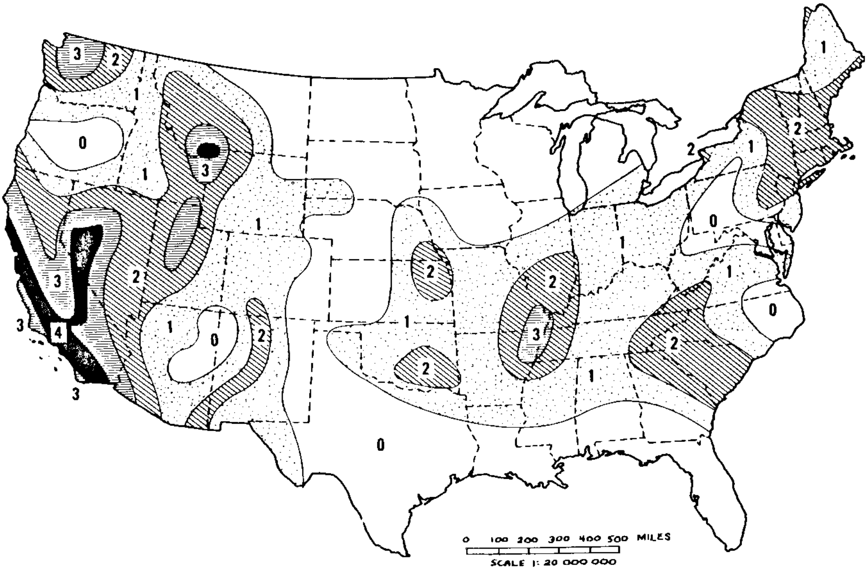

FIGURE B4.9 Map for seismic zones, contiguous 48 states. (*ANSI A58.1, 1982. Courtesy of ANSI.*)

TABLE B4.7 Dampling Values (Percent of Critical Damping)

Structure or component	Operating-basis earthquake or ½ safe-shutdown earthquake	Safe-shutdown earthquake
Equipment and large-diameter piping systems, pipe diameter greater than 12 in	2	3
Small-diameter piping systems, diameter equal to or less than 12 in	1	2
Welded steel structures	2	4
Bolted steel structures	4	7
Prestressed concrete structures	2	5
Reinforced concrete structures	4	7

Source: U.S. Nuclear Regulatory Commission. Regulatory Guide 1.61.

I = occupancy importance factor, usually between 1.0 and 1.5
K = horizontal force factor, dependent upon the arrangement of lateral force-resisting elements, usually between 0.67 and 2.50
$C = 1/(15T^{1/2})$ but not to exceed 0.12
T = fundamental period of structure, s
S = soil factor, dependent upon the soil profile type, usually between 1.0 and 1.5
W = total dead weight of structure, lb

Damping. Damping is the phenomenon of dissipation of energy in a vibrating system. Each damping value expressed as a percentage of the critical damping is represented in the seismic response spectrum by a separate curve. The higher the damping value, the lower would be the effects of the seismic excitation. The damping values to be used for different levels of the earthquake are given by the NRC (U.S. Nuclear Regulatory Commission) Regulatory Guide 1.61,[34] as shown in Table B4.7.

When a system has both categories of pipe sizes mentioned in the table, dual damping values should be considered in the analysis.

Alternative damping values for response spectrum analysis of ASME Classes 1, 2, and 3 piping are given in ASME Code Case N-411-1,[35,36] as shown in Fig. B4.10. These damping values are applicable to both OBE and SSE. They are also independent of pipe size. As can be seen from Fig. B4.10, the damping values of Code Case N-411-1 are generally higher than the damping values given in Regulatory Guide 1.61. The industry has been applying these higher damping values to existing piping systems to reduce the number of snubbers installed in the plants in order to save snubber maintenance cost. The use of Code Case N-411-1 is acceptable to the NRC subject to the conditions described in the NRC Regulatory Guide 1.84.[37]

Mass Point Spacing. In a seismic analysis, the piping is represented by lumped masses connected by massless elastic members. The locations of these lumped masses are referred to as the *mass points.* In order to accurately represent the piping, the mass points on straight runs of pipe should be no farther apart than a length of pipe which would have a fundamental frequency of 33 Hz (see the later subsection “Cookbook-Type Analysis”). Mass points should also be located at all supports, concentrated weights such as valves, valve operators, flanges, and strainers,

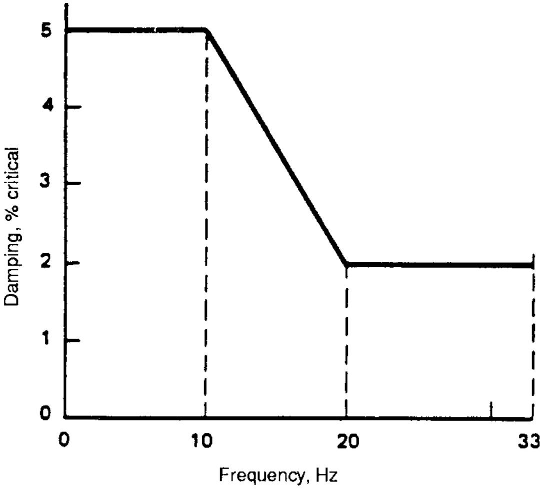

FIGURE B4.10 Code Case N-411 damping values. (*ASME B & PV Code, Case N-411-1, February 1989. Courtesy of ASME.*)

and at the end of cantilevered vents and drains. At least two mass points should be placed between supports in the same direction.[38]

Cutoff Frequency, Rigid Range, Zero Period Acceleration, and Missing-Mass Effect. Generally, the piping response spectrum analysis is terminated at a frequency called the *cutoff frequency.* The cutoff frequency is usually specified as the frequency beyond which the spectral acceleration remains constant, and this constant spectral acceleration is known as the *zero period acceleration (ZPA)* (see Fig. B4.8).

Supposing a piping system is so designed and supported that the first mode is higher than the cutoff frequency; then as far as the computer program is concerned, this piping system does not receive seismic excitation at all. Consequently, the result of this seismic analysis is invalid because of the artificial constraint specified by the stress analyst.

This phenomenon, known as the *missing-mass effect,*[39,40] could also occur in the following cases:

1. On pipe runs with axial restraint (support, anchor, or nozzle) where the longitudinal frequency could be higher than the cutoff frequency
2. Concentrated masses in a piping system supported in such a manner that the frequency of that portion of piping is high

Most of the computer programs normally used for piping stress analysis have the capability to evaluate the missing-mass effect. These programs usually utilize the acceleration from the spectrum at the cutoff frequency (ZPA) to calculate the missing-mass effect.

Methods for Combining System Responses. In general, there are two approaches for the combination of system responses. One approach, the *absolute sum method (ABS),* adds the peak system responses. The second approach, *square root–sum-of-squares method (SRSS),* gives a combined response equal to the square root of the sum of the squares of the peak responses. The SRSS method is preferred over the ABS method because not all the peak responses occur simultaneously.

In a response spectrum modal analysis, if the modes are not closely spaced (two consecutive modes are defined as closely spaced if their frequencies differ from each other by less than 10 percent of the lower frequency), responses could be combined by taking the SRSS method. For closely spaced modes, the NRC suggests that the method of combining the responses by the SRSS method may not be conservative. An acceptable method of grouping the closely spaced modes of vibration and combining the responses is described in the NRC Regulatory Guide 1.92.[41,42]

Seismic Anchor Movement and Building Settlement Analysis

A piping system, supported from two seismically independent structures that move out of phase during a seismic event, will experience stresses due to the differential displacement of the supports.

Buried pipe could be considered as supported by the soil. A differential movement during a seismic event between the soil and the building to which the pipe is routed could also cause stresses in the pipe.

Similarly, the differential settlements between two structures or between a building and the adjacent soil will induce stresses in piping which is routed between them.

Seismic Anchor Movement (SAM) Analysis. A seismic anchor movement analysis is required on a piping system where:

1. The piping is supported from two seismically independent structures, or
2. The piping is attached to large equipment having its own modes of vibration (e.g., steam generator, pressurizer, reactor vessel, or reactor coolant pump).

SAM analysis is performed by applying the corresponding seismic displacements of the building and structures at the pipe support and anchor locations. It is usually analyzed by a static method. However, dynamic supports such as snubbers and rigids (including anchors and nozzles) will be active while spring supports remain passive.

SAM displacements from the same building or structure are generally in phase, while those from different buildings or structures are considered out of phase.

When a terminal end of a piping system being analyzed is at a large pipe, the seismic movements from the large pipe analysis should be applied as a SAM displacement in the analysis.

The code allows the consideration of the stress due to SAM as either primary stress [see Eq. (B4.10)] or secondary stress [see Eq. (B4.11)]. However, it will usually be evaluated as secondary stress. Since the stress due to SAM is a cyclic type of stress, it should be combined with other cyclic-type secondary stresses such as thermal expansion stresses.

The total secondary stress range should include the thermal and SAM stress range. If the SAM stress is less than the thermal stress range, the effective secondary stress range is the sum of the SAM stress and the thermal stress range, as shown

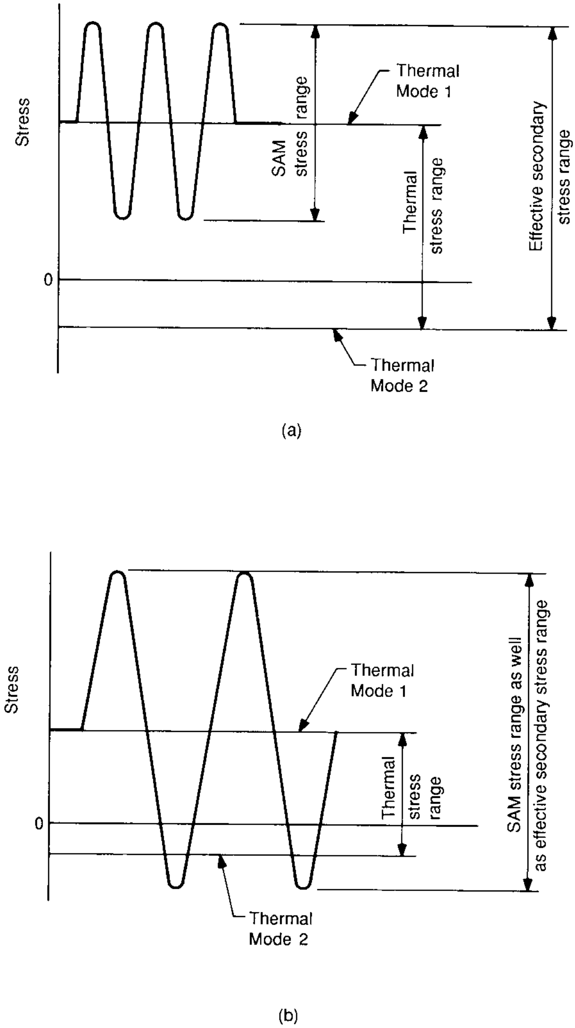
Stress
0
SAM stress range
Thermal Mode 1
Thermal stress range
Effective secondary stress range
Thermal Mode 2
(a)
Stress
0
Thermal Mode 1
Thermal stress range
SAM stress range as well as effective secondary stress range
Thermal Mode 2
(b)

FIGURE B4.11 Effective secondary stress range.

in Fig. B4.11*a*. If the SAM stress is higher than the thermal stress range, the effective secondary stress range then equals twice the SAM stress, as shown in Fig. B4.11*b*.

Building Settlement Analysis. ASME Boiler and Pressure Vessel Code Section III requires that the stresses due to building settlement be evaluated and be considered as secondary stresses. However, the stress due to building settlement is a one-time (single nonrepeated) anchor movement. Therefore, it is not required to combine it with other stresses. From Subsection NC-3653.2(b) of the code, the effects of any single nonrepeated anchor movement shall meet Eq. (B4.13).

Dynamic Loads

The dynamic loads discussed herein are limited to occasional loads (other than seismic loads) frequently encountered in piping stress analysis.

Safety Relief Valve Discharge Analysis. Safety-relief valves are installed for the purpose of protecting the fluid system from accidental overpressure, or venting the fluid generated in excess of requirement.

The general requirements pertaining to the design of the pressure relief discharge piping are provided in Appendix II of ASME B31.1, Subsections NC-3677 and NB-3677 of the ASME Code for different pipe classes.

There are two types of pressure relief valve discharge, namely, *open discharge* and *closed discharge,* as shown in the figures of Chap. B3.

Open Discharge. A typical open discharge is the transient due to discharging of steam from a steam line to the atmosphere through relief valves or safety valves. When the steam line pressure reaches the valve set point, the valve opens and decompression waves will travel both upstream and downstream of the valve. This flow transient sets up pressure imbalances along each pipe segment (a straight run of pipe bounded by elbows). The transient forces can be calculated by a computerized method as described in the later subsection ‘‘Steam Hammer–Water Hammer Analysis,’’ while the reaction force at the valve exit due to steady-state flow is determined relatively easily.

Closed Discharge. In a closed-discharge system, the fluid is transmitted to its terminal receiver through continuous discharge piping. A typical closed discharge is the transient induced by a sudden opening of the relief and safety valves located on top of the pressurizer in a power plant. A water seal, which is maintained upstream of each valve to minimize leakage, driven by this high discharge pressure, generates a transient thrust force at each pipe segment. The water seal is discharged ahead of the steam as the valve disk lifts. For discharge piping with a water seal, only the first cycle of each event has a transient force based on water in the seal. The remaining cycles would be based on steam occupying the seal piping, and the transient forces would be reduced in magnitude.

Static Analysis. The static method of open discharge described in Appendix II of ASME B31.1 can be summarized as follows:

1. The reaction force F due to steady-state flow following the opening of the valve may be computed by

$$F = \frac{WV}{g} + (P - P_a)A \tag{B4.57}$$

where F = reaction force at exit, lbf
W = mass flow rate, lbm/s
V = exit velocity, ft/s
g = gravitational constant
= 32.2 lbm · ft/lbf · s^2
P = static pressure at exit, psia
P_a = atmospheric pressure, psia
A = exit area, in^2

2. The dynamic load factor (DLF) is used to account for the increased load caused by the sudden application of the discharge load. The DLF value will range between 1.1 and 2.0, depending on the time history of the applied load and the natural frequency of the piping.[43] If the run pipe is rigidly supported and the applied load could be assumed to be a single ramp function, the DLF may be determined in the following manner:

a. Calculate the safety valve installation period *T*:

$$T = 0.1846\left(\frac{Wh^3}{EI}\right)^{1/2} \tag{B4.58}$$

where T = safety valve installation period, s
W = weight of safety valve, installation piping, flanges, attachments, etc., lb
h = distance from run pipe to centerline of outlet piping, in
E = Young's modulus of inlet pipe, psi, at design temperature
I = moment of inertia of inlet pipe, in^4

b. Calculate the ratio t_o/T where t_o is the time the safety valve takes to go from fully closed to fully open (seconds).

c. For the ratio t_o/T, determine the DLF from data given in Appendix II of ASME B31.1, as shown in Fig. B4.12.

3. The moment due to valve reaction force is calculated by simply multiplying the force times the distance from the point in the piping system being analyzed, times a suitable DLF. The stress is then calculated accordingly.

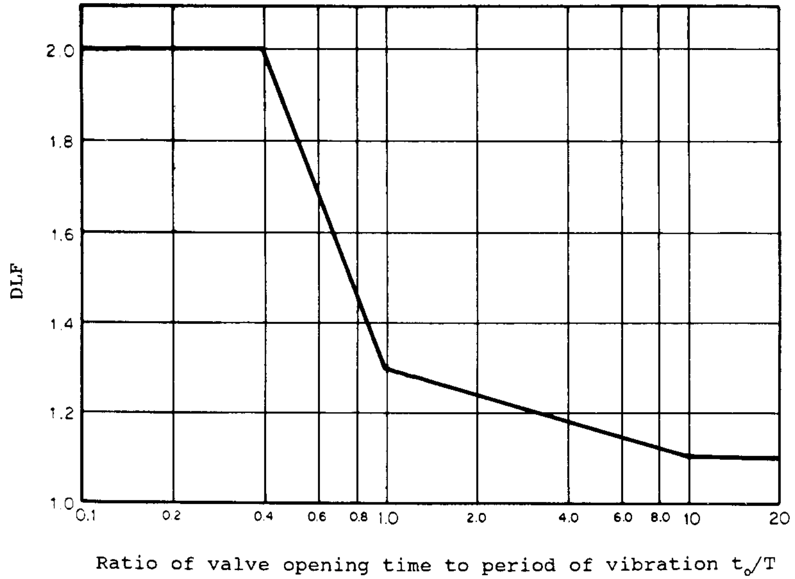

FIGURE B4.12 Hypothetical dynamic load factor (DLF).

Dynamic Analysis. The reaction force effects are dynamic in nature. A time-history dynamic analysis of the discharge piping is considered to be more accurate. Furthermore, closed-discharge systems do not easily lend themselves to simplified analysis techniques. A time-history analysis (such as the one described in the following subsection) is required to achieve realistic results.

Steam Hammer–Water Hammer Analysis. The steam hammer–water hammer event is often initiated by intentional actuation of certain flow control devices (main steam stop valve closure, feedwater pump trip, etc.), but in other cases a transient event could be introduced unintentionally as the result of some unforeseen operating condition, component malfunction, or accident (e.g., feedwater line check valve slam following a pipe break upstream of the check valve).[44,45] While these events may produce very complex transient fluid flow, the pipe stress analyst is interested in just the unbalanced force along the pipe segment tending to induce piping vibration.

Calculation of Unbalanced Forces. These time-history unbalanced forces are usually generated through a two-step computerized calculation. The fluid system is modeled as an assemblage of control volumes (e.g., piping volumes or steam generator) interconnected by junctions (e.g., valves, pump, or break). Piping fluid flow data, such as flow area, friction losses, valve closing-opening time, feed pump characteristics, or break characteristics, together with fluid initial conditions (flow rate, pressure, temperature, and mixture quality) are supplied as input to a thermal hydraulic finite difference computer program.[46]

Using this input information and a built-in steam table (fluid thermodynamic state), the first step solves the three equations of conservation (mass, momentum, and energy) at each time step for fluid properties such as pressure, velocity, internal energy, and mixture quality. A typical stop valve closure time history and its associated dynamic pressure time history are shown in Fig. B4.13. The second step utilizes a postprocessor. This postprocessor then accepts the output information from the first step and computes the unbalanced forces in piping segments by applying the momentum theorem.

Static Analysis. Static analysis is simple and saves computer time. It is used when the unbalanced forces are small and the total transient time is long. In the analysis, the peak values of the time-history fluid forcing functions at pipe segments are applied statically to the piping. The piping stress, deflections, and support-nozzle loads are then calculated by the computer program.

To obtain a conservative result for the static analysis, care must be taken in applying a proper dynamic load factor to the unbalanced forces.

Dynamic Analysis. The dynamic analysis generally utilizes either the direct step-by-step integration method (as described in the subsection ''Pipe Break Analysis'') or the modal-superposition method. In the dynamic analysis, the piping system is idealized as a mathematical model consisting of lumped masses connected by weightless elastic members. These lumped masses are carefully located to adequately represent the dynamic characteristics of the piping system. For computer programs utilizing the modal-superposition method, enough modes (or appropriate cutoff frequency) should be specified in the computer input such that the dynamic response of the piping system can be truly represented. There are no specific guidelines to damping values used in piping fluid transient dynamic analysis in the ASME Code or NRC published material. Therefore, it is recommended to use the OBE damping values prescribed in the NRC Regulatory Guide 1.61. Alternative damping values of Code Case N-411-1 are not applicable to the dynamic analysis.

The time-history unbalanced forces are applied to all pipe segments. Snubbers and rigid supports are effective restraints for transient forces. However, axial sup-

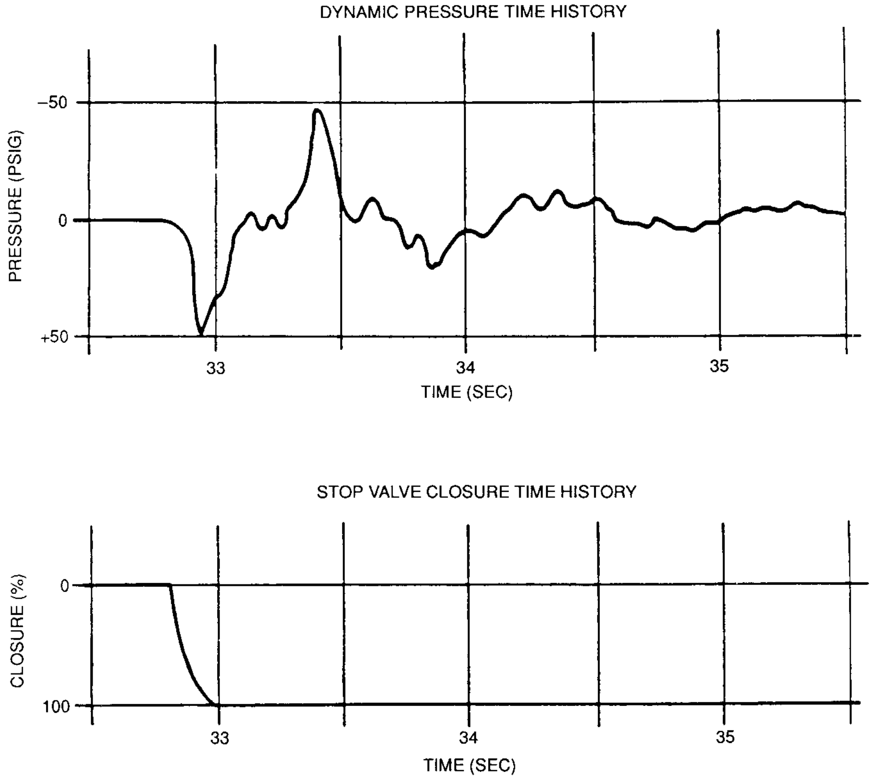

FIGURE B4.13 Steam hammer flow transients.

ports should be avoided in general. An axial support not only requires welded attachments on the pipe but also a pair of supports, which doubles the cost. To support the pipe axially, lateral supports can be used around the elbows. In addition, snubbers should not be located in the immediate vicinity of equipment nozzles. Snubbers located in such areas may not be activated during a fluid transient because of the dead band (built-in manufacturing tolerance) of the snubber hardware.

Stress Allowables. For the steam hammer–water hammer (e.g., feed pump trip) event, the pipe stress from the analysis is combined with stresses due to pressure, deadweight, and OBE in meeting the upset stress allowable. For piping in the turbine building, OBE stress is not included in the stress combination. For some water hammer (e.g., check valve slam) events, the stress from the analysis is combined with stresses due to pressure and deadweight in meeting the faulted stress allowable.

LOCA Analysis. LOCA (loss-of-coolant accident) is a postulated accident that results from the loss of reactor coolant, at a rate in excess of the capability of the reactor coolant makeup system, from breaks in the reactor coolant pressure boundary. Analyses should be performed by the *nuclear steam supply system (NSSS)* vendor to confirm the structural design adequacy of the reactor internals and reactor coolant piping (unbroken loop) to withstand the loadings of the most severe LOCA in combination with SSE per the requirements of 10CFR Part 50, Appendix A,[20] and the NRC Standard Review Plan 3.9.2.[47]

The integrity of the secondary system piping (main steam, feedwater, blowdown lines) off the steam generators also has to be assured by the architect-engineer (AE). Additional analyses to demonstrate the structural adequacy of some of the branch piping attached to the broken loop may be required by the NSSS vendor.[48] The information provided herein is limited to the secondary system piping off the steam generators.

Static Analysis. If a substantial separation between the forcing frequencies of the LOCA loading and the natural frequencies of the piping system can be demonstrated, a static analysis may be performed. In the static analysis, the maxima of each of the LOCA displacement components (three deflections and three rotations) are separately applied to the junctions of the *reactor coolant loop (RCL)* and the secondary system piping. The results should be combined absolutely and multiplied by an appropriate dynamic load factor.

Dynamic Analysis. The dynamic analysis can be performed in one of the following two ways:

Time-History Analysis. The LOCA displacement time history is applied dynamically to the junctions of the RCL and the secondary system piping. The damping value prescribed in the NRC Regulatory Guide 1.61 for SSE is suggested for this dynamic LOCA analysis. The detailed analysis method is similar to that described in the following subsection ''Pipe Break Analysis.''[49]

Response Spectrum Analysis. Compared to the time-history analysis, the response spectrum method is favorable for its low computer cost. However, this method may be unnecessarily conservative since the same loading has to be applied to the entire piping system. Because of the nature of the LOCA break and the impacting of the gapped RCL supports, the LOCA motion has much higher frequency content than the seismic excitation. The ZPA of a typical LOCA motion spectrum for a RCL junction is usually higher than that of a typical SSE response spectrum. Therefore, a higher cutoff frequency should be used in the analysis.[50]

Stress Allowables. The resulting stress from the LOCA analysis for the secondary piping system is combined with the stresses due to pressure, dead weight, and SSE in meeting the faulted stress allowables.

Pipe Break Analysis. Although it is extremely improbable that a pipe break will occur as postulated, public safety and the NRC licensing requirements make it necessary that such events must be considered in the design of high-energy piping systems.

A *high-energy piping system* is a piping system that, during normal plant conditions, is maintained at a temperature $>$ 200°F (93.3°C), or a pressure $>$ 275 psig (1896.1 kPa).

Pipe Break Locations. Pipe breaks are postulated in high-energy piping based on the primary plus secondary stresses and the cumulative usage factor.

1. *ASME Section III, Class 1 Pipe:* Pipe breaks are postulated to occur at terminal ends (the extremities of piping connected to structures, components, or anchors) and at all intermediate locations where:

  a. The primary plus secondary stress intensity range, as calculated by Equation (10) of Subsection NB-3653 [i.e., Eq. (B4.4) of this chapter], exceeds $2.4S_m$ and either Equation (12) or (13) [i.e., Eq. (B4.5) of this chapter] exceeds $2.4S_m$.

  b. Cumulative usage factor exceeds 0.1.

2. *ASME Section III, Class 2 and 3 Pipe:* Pipe breaks are postulated to occur at terminal ends and at all intermediate locations where the primary plus secondary stresses, as calculated by the sum of Equations (9) and (10) of Subsection NC-3653 [i.e., Eqs. (B4.10) and (B4.11) of this chapter], exceed $0.8(1.2S_h + S_A)$.
3. *Nonnuclear piping:* If a rigorous analysis, including seismic loading condition, is done on a high-energy ASME B31.1 piping, the requirements of the Class 2 and 3 piping mentioned above will apply. If no analysis is performed, breaks are postulated at the following locations:
   - ***a.*** Terminal ends
   - ***b.*** At all fittings, welded attachments, and valves

The detailed pipe break design criteria and guidelines are given in the NRC Standard Review Plan No. 3.6.1 and 3.6.2.[51,52]

No-Break Zone. In the design of nuclear power plants, the region of piping in the containment building penetration areas between the isolation valves requires extra protection so that neither the leak-tight integrity of the containment nor the operability of the containment isolation valves is jeopardized. The extra protection consists of the following:

1. Installing special whip restraints, called *isolation restraints,* to mitigate the effects of the postulated pipe breaks located beyond this region
2. Keeping the primary plus secondary stresses and the cumulative usage factor below certain conservative values
3. Holding the piping stress, the isolation valve acceleration, and the stress at the valve-pipe weld below specified limits during a postulated pipe break outside this region
4. Special construction (welding) requirements and in-service inspection procedures

Because of the stringent design requirements, no pipe breaks are assumed to occur in this region. This area of piping is often referred to as the *no-break zone,* the *break exclusion region,* or the *superpipe area.*

No-Break Zone Piping Analysis. An analysis is required to determine the stresses in no-break zone piping and the accelerations of isolation valves due to a postulated break located beyond this region. During the pipe break event, a portion of the piping and the isolation restraints may enter the inelastic region because of the large pipe break loads imposed on the piping system. A static method, or the energy balance method, is acceptable but usually not used because necessary information on the no-break zone such as isolation valve acceleration is impossible to determine. Therefore, a nonlinear dynamic analysis utilizing the direct step-by-step integration method is necessary for the no-break zone analysis.[53] Computer programs based upon the direct integration method with linear elastic and nonlinear inelastic capabilities are often used for this type of analysis.[54,55]

In the analysis, the piping structural model is similar to that described in the subsection ‘‘Steam Hammer–Water Hammer Analysis.’’ The nonlinear effects are accounted for by updating the system stiffness matrix at the end of each time step. The integration time step must be short enough to permit a reliable and stable solution. In addition, suitable system damping values should be used to obtain numerical stability. The time-history pipe break forcing function can be calculated by thermal-hydraulic computer programs as described in the subsection ‘‘Steam Hammer–Water Hammer Analysis,’’ or obtained from the acceptable simplified method specified in Appendix B of ANSI/ANS 58.2.[56]

Wind Loads. The wind possesses kinetic energy by virtue of the velocity and mass of the moving air. If an obstacle is placed in the path of the wind so that the moving air is stopped or is deflected, then all or part of the kinetic energy of the wind is transformed into the potential energy of pressure.

A piping system which is located outdoors is usually designed to withstand the maximum wind velocity expected during the system operating life.

Dynamic Pressure. The intensity of wind pressure depends on the shape of the obstacle, the angle of incidence of the wind, and the velocity and density of the air.

For standard air (density of the air = 0.07651 lb/ft^3, temperature = 59°F), the expression for the wind dynamic pressure could be adapted from Bernoulli's equation for fluid flow as follows[33,57]:

$$p = 0.00256V^2C_D \tag{B4.59}$$

where p = dynamic pressure, lb/ft^2
V = basic wind speed, mi/h
C_D = drag coefficient, dimensionless

For the case of piping under wind loading, Eq. (B4.59) can be rewritten as

$$F = 0.000213V^2C_DD \tag{B4.60}$$

where F = linear dynamic pressure loading on projected pipe length, lb/ft
D = pipe diameter, including insulation, in

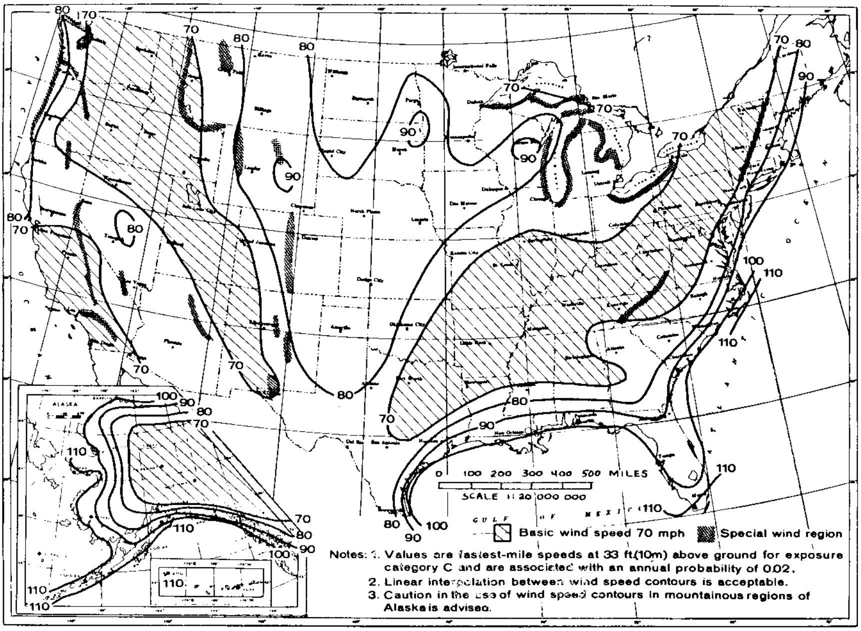

Notes: 1. Values are fastest-mile speeds at 33 ft.(10m) above ground for exposure category C and are associated with an annual probability of 0.02.
2. Linear interpolation between wind speed contours is acceptable.
3. Caution in the use of wind speed contours in mountainous regions of Alaska is advised.

FIGURE B4.14 Basic wind speed (miles per hour). (*ANSI A58.1, 1982. Courtesy of ANSI.*)

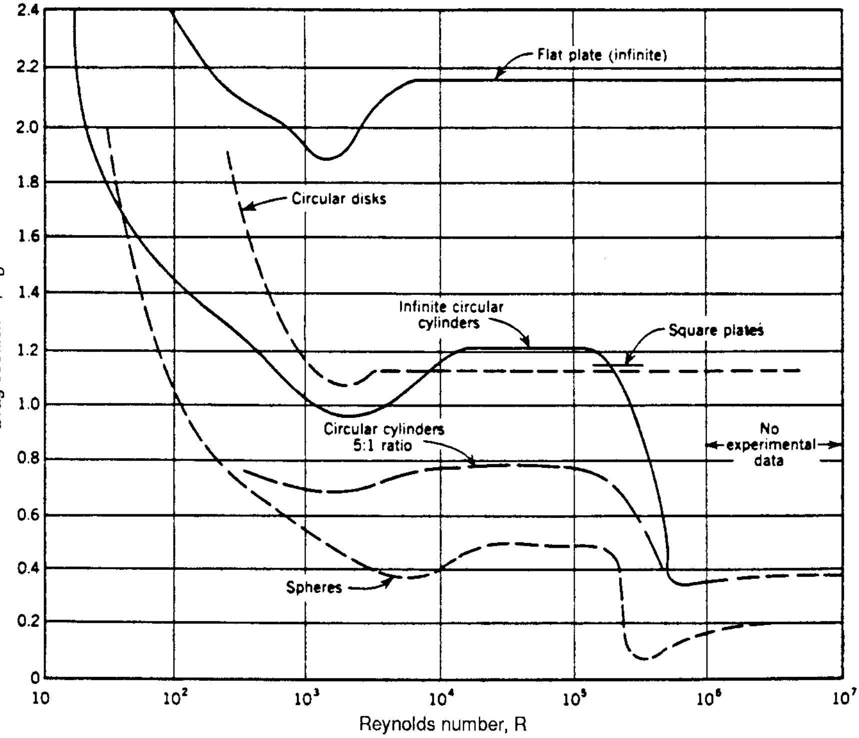

FIGURE B4.15 Drag coefficients for spheres and long cylinders. (*Task Committee on Wind Forces, "Wind Forces."*[30] Courtesy of ASCE.)

Basic Wind Speed. The basic wind speed V is the fastest wind speed at 33 ft above the ground in open terrain with scattered obstructions having heights less than 30 ft, as given in Fig. B4.14 for the United States.[33] The basic wind speed used for design shall be at least 70 mi/h.

Drag Coefficient. The drag coefficient C_D is a function of the shape of the structure and a fluid flow factor called the *Reynolds number.* The Reynolds number R is the ratio of the inertial force to the viscous force which a fluid stream exerts on an object. For standard air, the Reynolds number R could be expressed as

$$R = 780VD \qquad \text{(B4.61)}$$

The drag coefficient C_D for a cylinder (i.e., a pipe) is given versus the Reynolds number in Fig. B4.15.

Wind Loading Analysis. The piping wind loading analysis is usually performed by a static method. In the analysis, the wind loading F is modeled as a uniform load acting over the projected length of the pipe, parallel to the direction of the wind. Two horizontal directions of wind loads (north-south and east-west) are included in the analysis. The design loads are based on the worst case of the two directions. Similar to the case of earthquake, the wind loading is considered reversing. For load combination, the wind and the earthquake are assumed to not

TABLE B4.8 Gust Response Factor *G*

Height above ground level, ft	*G*			
	Exposure A	Exposure B	Exposure C	Exposure D
0–15	2.36	1.65	1.32	1.15
20	2.20	1.59	1.29	1.14
25	2.09	1.54	1.27	1.13
30	2.01	1.51	1.26	1.12
40	1.88	1.46	1.23	1.11
50	1.79	1.42	1.21	1.10
60	1.73	1.39	1.20	1.09
70	1.67	1.36	1.19	1.08
80	1.63	1.34	1.18	1.08
90	1.59	1.32	1.17	1.07
100	1.56	1.31	1.16	1.07
120	1.50	1.28	1.15	1.06
140	1.46	1.26	1.14	1.05
160	1.43	1.24	1.13	1.05
180	1.40	1.23	1.12	1.04
200	1.37	1.21	1.11	1.04
250	1.32	1.19	1.10	1.03
300	1.28	1.16	1.09	1.02
350	1.25	1.15	1.08	1.02
400	1.22	1.13	1.07	1.01
450	1.20	1.12	1.06	1.01
500	1.18	1.11	1.06	1.00

Source: ANSI A58.1, 1982. (*Courtesy of ANSI.*) (1 ft = 0.3048 m)

happen at the same time. A safety factor, the gust response factor *G,* should also be considered in the analysis. This factor is used to account for the fluctuating nature of wind and its interaction with structures. Its value depends on the exposure categories as shown in Table B4.8, where:

1. *Exposure A:* Large city centers with at least 50 percent of the buildings having a height in excess of 70 ft
2. *Exposure B:* Urban and suburban areas, wooded areas, or other terrain with numerous closely spaced obstructions having the size of single-family dwellings or larger
3. *Exposure C:* Open terrain with scattered obstructions having heights generally less than 30 ft
4. *Exposure D:* Flat, unobstructed coastal areas directly exposed to wind flowing over large bodies of water

METHODS OF ANALYSIS

Cookbook-Type Analysis

The following cookbook-type method is mainly for supporting 2-in and smaller Nuclear Class 2, 3, and B31 piping under gravity, thermal expansion, and seismic loadings. This method is based on standard support span tables. It covers a simplified weight analysis, a simplified thermal analysis, as well as a simplified seismic analysis.

A simplified seismic analysis often requires many pipe supports that are designed to large loads. The cost saving in engineering is offset by increased fabrication and installation cost. The current approach is to analyze the nonseismic piping by simplified methods and all seismic piping by computerized analysis. This greatly reduces the number of required seismic supports and gives an overall cost saving.

Simplified Weight Analysis. A simplified weight analysis is performed by locating the gravity supports based on gravity pipe spans. The maximum gravity pipe spans can be calculated from the following formula:

$$L = \left(\frac{SZ}{1.2W} \right)^{1/2} \tag{B4.62}$$

where L = maximum gravity pipe span, ft
Z = section modulus of pipe, in^3
W = distributed weight, lb/ft
S = pipe stress due to gravity, psi

and the corresponding stress S is

$$S = \frac{M}{Z} = \frac{1.2WL^2}{Z} \tag{B4.63}$$

where M = bending moment, in · lb.

Alternatively, the bending stress in empty pipe may be read from Fig. B4.16, and the bending stress in water-filled pipe from Fig. B4.17. The deflection of empty pipe can be read from Fig. B4.18.

The distributed weight of pipe includes the weight of metal, the weight of pipe contents, and the weight of insulation. Pipe material weights are subject to tolerance of applicable manufacturing specifications.

Weights of insulation depend on the composition of insulation material and should be obtained from the insulation manufacturer. Weights of weatherproof protection, if specified, must be added. Insulation thicknesses recommended by insulation manufacturers do not necessarily agree with insulation specifications for a particular job. Insulation specifications should be reviewed prior to development of final weights of piping.

Weights of insulation should be added to weights of flanges, valves, and fittings. Flange, flanged valve, and flanged fitting weights should include weights of bolts and nuts.

Valve weights vary among particular manufacturers' designs and should include weights of electric-motor operators (if any) or other devices which may be specified for particular valves. It is suggested that, wherever possible, valve weights should be obtained from the manufacturer of the particular valves which are to be installed in the piping.

Equation (B4.62) is based on the combination of a simply supported beam model and a fixed-end beam model because the behavior of pipe lies somewhere between these two models.

A table of suggested maximum spans between supports of pipe based on a formula similar to Eq. (B4.62) is given in ASME Codes,[58,59] as shown in Fig. B5.1

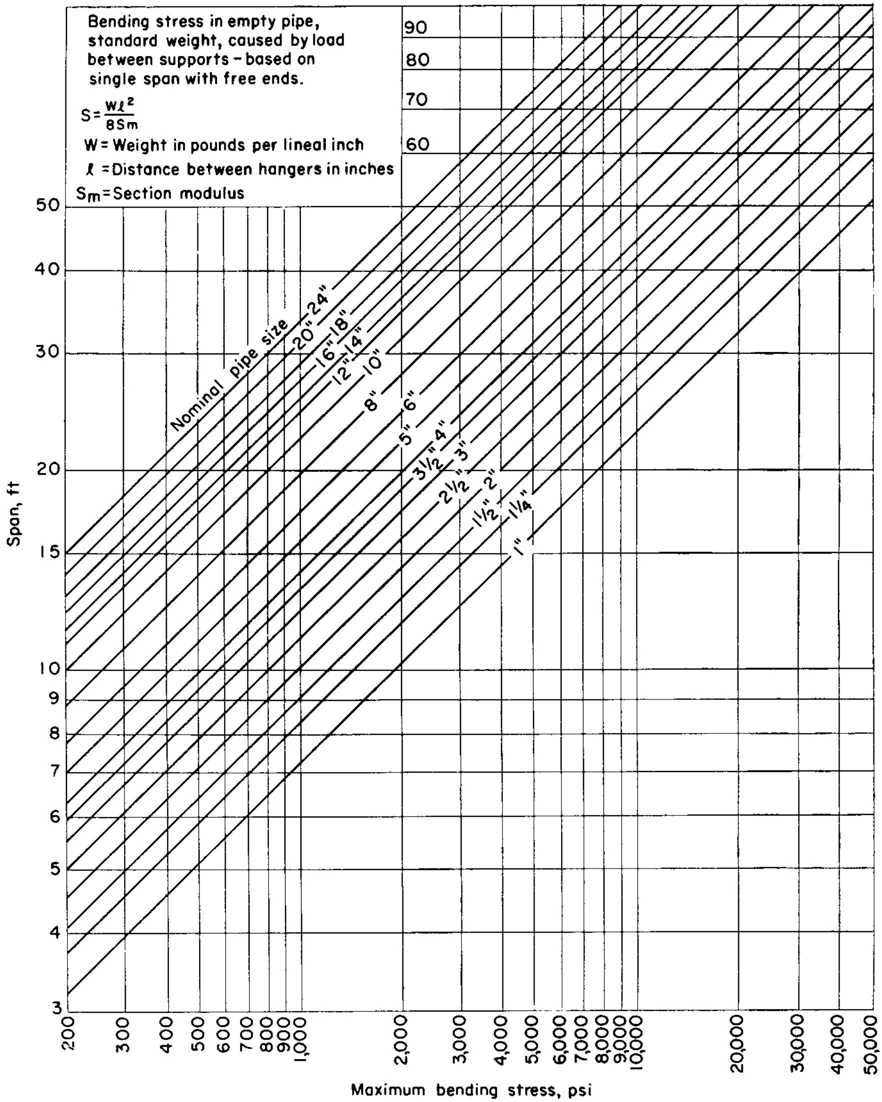

1 in = 25.4 mm
1 ft = 0.3048 m
1 psi = 6.8948 kPa

FIGURE B4.16 Bending stress in empty pipe.

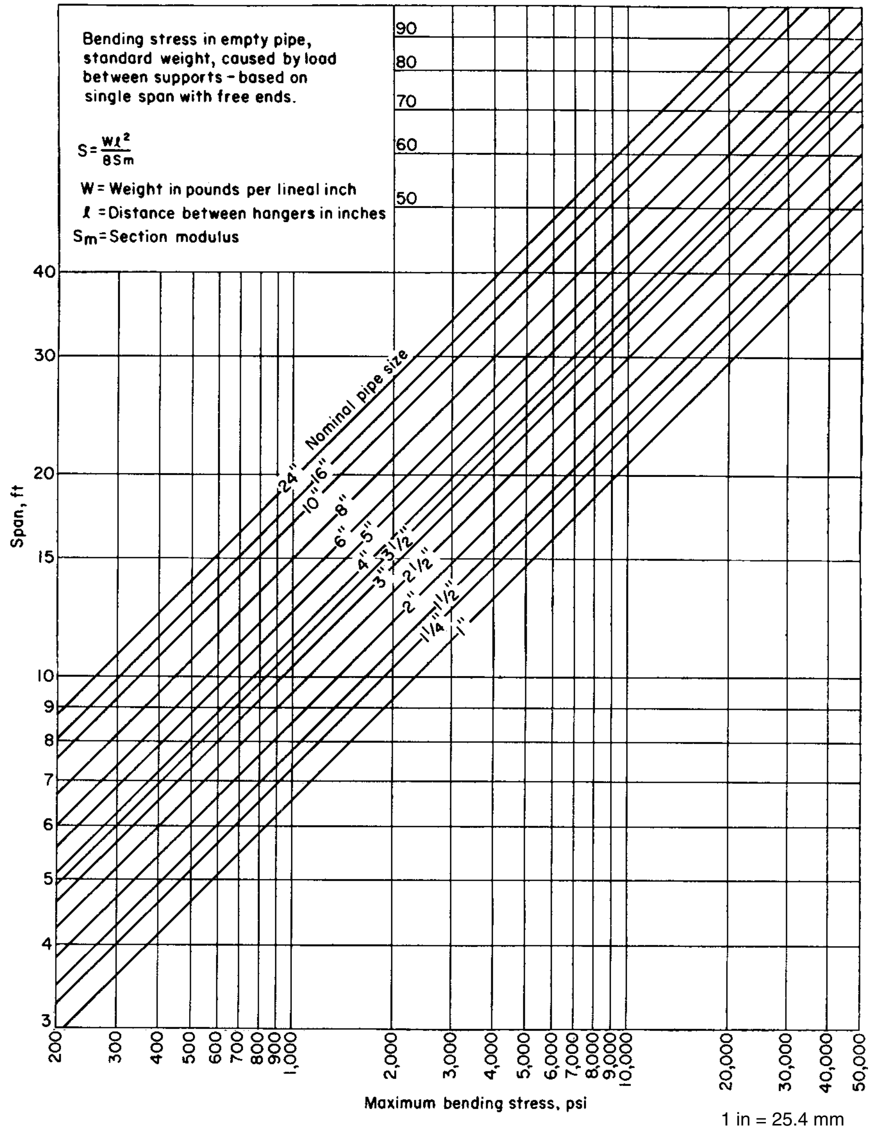

Bending stress in empty pipe, standard weight, caused by load between supports - based on single span with free ends.

$$S = \frac{Wl^2}{8S_m}$$

W = Weight in pounds per lineal inch

l = Distance between hangers in inches

S_m = Section modulus

1 in = 25.4 mm
1 ft = 0.3048 m
1 psi = 6.8948 kPa

FIGURE B4.17 Bending stress in water-filled pipe.

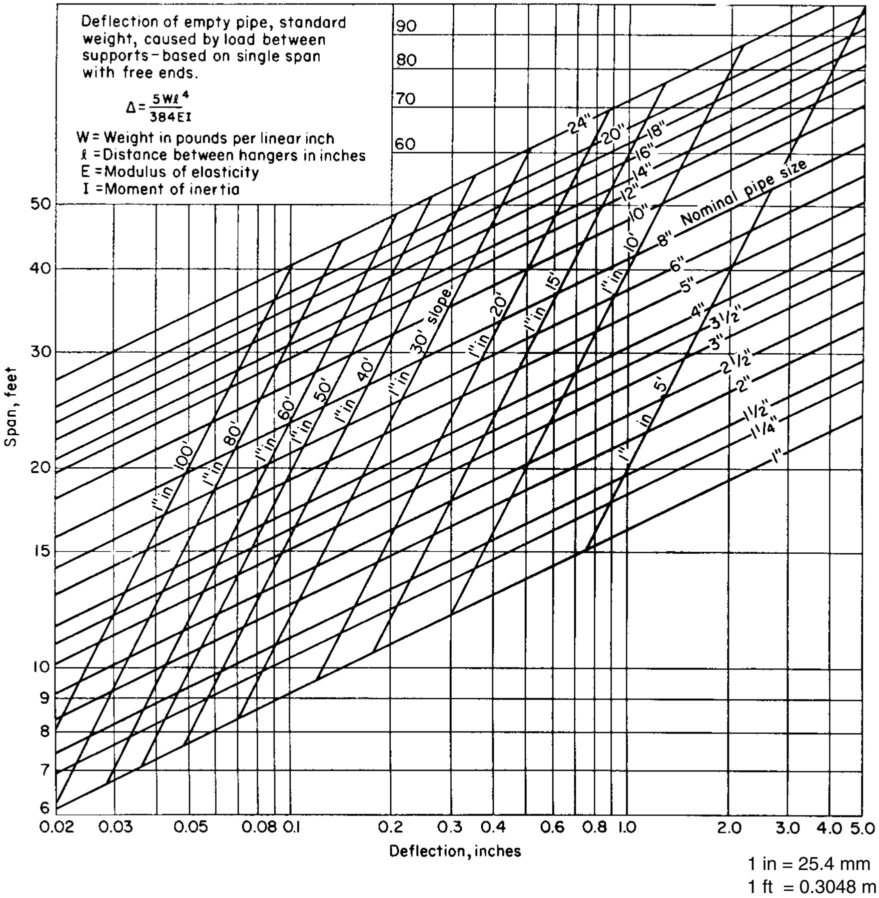

FIGURE B4.18 Deflection of empty pipe.

of Chap. B5. These spans have been calculated by considering insulated, standard wall thickness and heavier pipe, limited to a maximum stress of 1500 psi (10,350 kPa) and maximum pipe sag of 0.1 in (0.25 mm). For small pipe where socket welds are used, Eq. (B4.63) can be rewritten as

$$S = \frac{0.75iM}{Z} = \frac{1.89WL^2}{Z} \tag{B4.64}$$

and

$$L = \left(\frac{SZ}{1.89W}\right)^{1/2} \tag{B4.65}$$

where i = the stress intensification factor (SIF), 2.1 for socket welds per ASME B31.1 and ASME Section III piping codes.

Figures B5.2 and B5.3 of Chap. B5 give the maximum spans for water and steam, air, or gas filled steel pipe, respectively. These tables are based on a pipe stress S of 2000 psi (13.790 MPa) and a socket weld SIF of 2.1. When these suggested weight spans are adhered to, the stress in the piping system due only to gravity load usually need not be explicitly calculated.

Load Calculation by Weight Balance. The following example is used to illustrate a method by which hanger loadings may be determined. The method consists of locating the center of gravity of the specific piping configuration and then, by equating moments, to determine the resultant loads at particular hangers.

A single-plane bend is shown in Fig. B4.19. Hangers are indicated as *H*-1, *H*-2, *H*-3, and *H*-4. The effects of uniform and concentrated loads are indicated at the points at which these loads act; it is noted that the weight of the 90° bend acts at the centroid of a quarter circle which, in this example, is located 1.8 ft distant from the centerline of the pipe run. The straight pipe length between hangers *H*-3 and *H*-4 is not included in this calculation because it can be analyzed by simple straight-beam theory.

For the piping section which lies between equipment flange *F* and hanger *H*-3, moments are taken about the *Y*-*Y* and *Z*-*Z* axes. As an example, let the center of gravity of this configuration be located *Y* ft from the *Y*-*Y* axis. Then, from equilibrium considerations, the following equation may be written:

$$2436(0) + 910(1.8) + 2320(15) + 436(25) = 6102Y$$

A solution to this equation results in $Y = 7.75$ ft.

Similarly, the distance from the *Z*-*Z* axis to the center of gravity is found to be 6.43 ft.

For convenience, the calculations are made frequently in a tabular fashion as shown in Fig. B4.19.

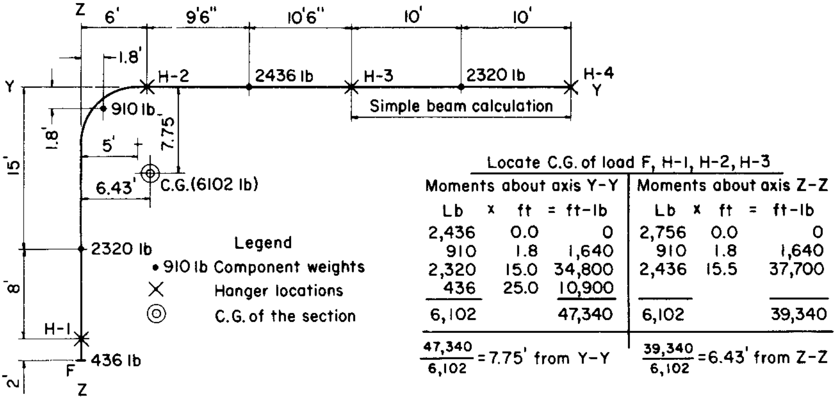

Locate C.G. of load F, H-1, H-2, H-3

Moments about axis Y-Y			Moments about axis Z-Z		
Lb ×	ft =	ft-lb	Lb ×	ft =	ft-lb
2,436	0.0	0	2,756	0.0	0
910	1.8	1,640	910	1.8	1,640
2,320	15.0	34,800	2,436	15.5	37,700
436	25.0	10,900			
6,102		47,340	6,102		39,340

$\frac{47,340}{6,102}$ = 7.75' from Y-Y

$\frac{39,340}{6,102}$ = 6.43' from Z-Z

1 lb = 4.448 N
1 ft = 0.3048 m
1 ft-lb = 1.3561 N-m

FIGURE B4.19 One-line piping diagram for illustration of load calculation by weight balance.

Construct the triangle H-1, H-2, H-3 superimposing location of C.G. and calculate reactions at H-1, H-2 and H-3

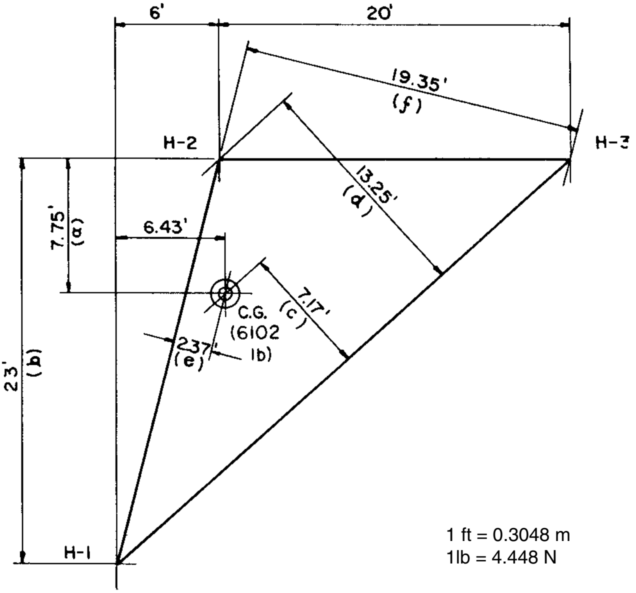

Reaction at $\text{H-1} = \dfrac{a}{b} \times 6102 = \dfrac{7.75}{23} \times 6102 = 2055$ lbs

$\text{H-2} = \dfrac{c}{d} \times 6102 = \dfrac{7.17}{13.25} \times 6102 = 3301$ lbs

$\text{H-3} = \dfrac{e}{f} \times 6102 \quad \dfrac{2.37}{19.35} \times 6102 = 746$ lbs

$F =$ 0 lbs

6102 lbs

Total load on $\text{H-3} = 746 + \dfrac{2320}{2} = 1906$ lbs

FIGURE B4.20 Hanger load calculations for system of Fig. B4.19. Three hangers with zero reaction at flange *F.*

Let it be now required to determine hanger loadings for the piping configuration of Fig. B4.19 with the stipulation that no load due to weight be imposed on the equipment flange *F.* This is accomplished easily by use of simple geometrical relationships, and the solution is as indicated in Fig. B4.20.

If it were desired to support the piping with two, rather than three, hangers, it would be convenient to eliminate *H*-1 and to relocate *H*-2 to a position at which it would be colinear with the center of gravity and hanger *H*-3. The construction for this arrangement and the associated hanger-load calculations are shown in Fig. B4.21.

In each of the two above cases, one-half of the 2320-lb load between *H*-3 and *H*-4 has been included in the calculations for hanger loading on *H*-3. Thus *H*-4 would be required to support 1160 lb plus, of course, any additional piping load to the right of *H*-4 in Fig. B4.19.

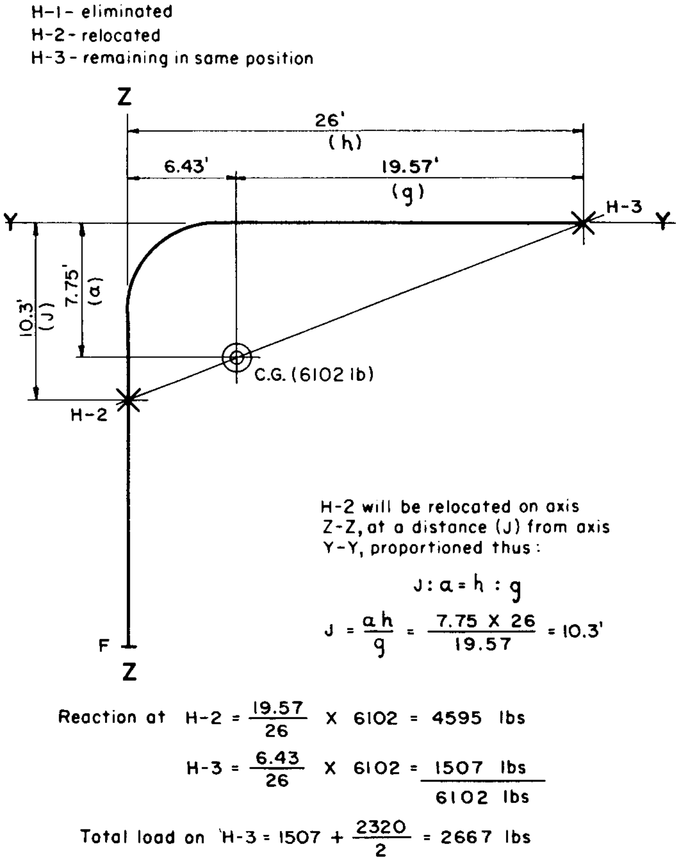
H-1 - eliminated
H-2 - relocated
H-3 - remaining in same position
Z
26'
(h)
6.43'
19.57'
(g)
Y
H-3
Y
10.3'
(J)
7.75'
(a)
C.G. (6102 lb)
H-2
H-2 will be relocated on axis Z-Z, at a distance (J) from axis Y-Y, proportioned thus:
J : a = h : g
J = ah/g = 7.75 X 26 / 19.57 = 10.3'
F
Z
Reaction at H-2 = 19.57/26 X 6102 = 4595 lbs
H-3 = 6.43/26 X 6102 = 1507 lbs
6102 lbs
Total load on H-3 = 1507 + 2320/2 = 2667 lbs

FIGURE B4.21 Hanger load calculations for system of Fig. B4.19 except that one hanger has been eliminated.

Simplified Thermal Expansion Analysis. This simplified analysis is based on the guided cantilever method. The *guided cantilever* is a cantilever beam restrained in such a way that its free end will not rotate when it is deflected in a direction perpendicular to the longitudinal axis of the beam, as shown in Fig. B4.22.

For piping systems under thermal expansion loads, the behavior of the piping approximates that of a guided cantilever. The thermal growth forces the pipe leg

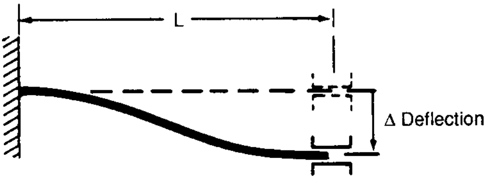
L
Δ Deflection

FIGURE B4.22 Guided cantilever.

to translate while pipe rotations are restricted by piping continuity. Therefore, this method can be used to check the flexibility of a piping system.

For a guided cantilever, the moment induced by an imposed deflection is

$$M = \frac{6EI\Delta}{L^2} \tag{B4.66}$$

where M = induced moment, in · lb
E = modulus of elasticity, psi
I = moment of inertia, in^4
Δ = deflection, in
L = length of pipe leg perpendicular to deflection, in

The corresponding stress is then

$$S = \frac{iM}{Z} = \frac{6EI\Delta i}{ZL^2} = \frac{3ED\Delta i}{L^2} \tag{B4.67}$$

where S = induced stress, psi
D = outside diameter of pipe, in
Z = section modulus of pipe, in^3
i = stress intensification factor

Solving the equation for the beam length L gives

$$L = \left(\frac{3ED\Delta i}{S}\right)^{1/2} \tag{B4.68}$$

By determining the proper allowable stress and taking into account the appropriate stress intensification factor, Eq. (B4.68) gives an estimate of the minimum allowable offset pipe span L required to sustain a piping thermal movement Δ normal to the piping.

Tables B4.9 and B4.10 give the minimum allowable offset span for steel piping ($E = 27.9 \times 10^6$ psi) with socket welds ($i = 2.1$) and without socket welds, respectively. These tables are based on allowable stresses S of 22,500 psi.

Thermal Movement Calculations. The simplified method shown below is one which gives satisfactory approximations of the piping movements. Whenever differences occur between the approximations and actual movements, the approximation of the movement will always be the greater amount.

Step 1. The piping system of Fig. B4.23 is drawn, and on it are shown all known vertical movements of the piping from its cold to hot, or operating, position. These movements will include those supplied by the equipment manufacturers for the terminal point connections. For the illustrated problem, the following vertical movements are known:

Point *A*—2 in up, cold to hot

Point *B*—1⅙ in up, cold to hot

Point *C*—⅛ in down, cold to hot

H-4—0 in cold to hot

TABLE B4.9 Thermal Expansion Minimum Allowable Offset Span (Feet-Inches), Straight Steel Pipe with Socket Welds

Therm. expan., in	Pipe size, NPS (DN)				
	½ (15)	¾ (20)	1 (25)	1½ (40)	2 (50)
0.10	2-1¾	2-4¾	2-8	3-2½	3-7
0.15	2-7½	2-11	3-3¼	3-11¼	4-4¾
0.20	3-0¼	3-4½	3-9¼	4-6½	5-1
0.25	3-4½	3-9¼	4-2¾	5-1	5-8
0.30	3-8½	4-1½	4-7½	5-6¾	6-2½
0.35	4-0	4-5½	5-0	6-0	6-8½
0.40	4-3¼	4-9¼	5-4	6-5	7-2¼
0.45	4-6¼	5-0¾	5-8	6-9¾	7-7¼
0.50	4-9¼	5-4	5-11¾	7-2¼	8-0¼
0.60	5-2¾	5-10¼	6-6½	7-10¼	8-9½
0.70	5-7¾	6-3¾	7-0¾	8-6	9-6
0.80	6-0½	6-9	7-6¾	9-1	10-1¾
0.90	6-4¾	7-2	8-0¼	9-7½	10-9¼
1.00	6-9	7-6½	8-5¼	10-1¾	11-4¼
1.10	7-1	7-11	8-10¼	10-7¾	11-10¾
1.20	7-4¾	8-3¼	9-3	11-1½	12-5¼
1.50	8-3¼	9-3	10-4¼	12-5¼	13-10¾
1.75	8-11¼	9-11¾	11-2	13-5¼	15-0¼
1.90	9-3¾	10-4¾	11-7¾	14-0	15-7¾
2.00	9-6½	10-8	11-11¼	14-4¼	16-0¾
2.50	10-8	11-11¼	13-4¼	16-0¾	17-11¼
3.00	11-8¼	13-0¾	14-7¼	17-7	19-8

1 in = 25.4 mm
1 ft = 0.3048 m

The operating temperature of the system is given as 1050°F (566°C), and the coefficient of expansion for low-chrome steel at 1050°F (566°C) is 0.0946 in/ft.

The movements at points *D* and *E* are calculated by multiplying the coefficient of expansion by the vertical distance of each point from the position of zero movement on the riser *DE:*

$$55 \text{ ft} \times 0.0946 \text{ in/ft} = 5.20 \text{ in } \textit{up} \text{ at } D$$

$$20 \text{ ft} \times 0.0946 \text{ in/ft} = 1.89 \text{ in } \textit{down} \text{ at } E$$

Step 2. A simple drawing is made of the piping between two adjacent points of known movement, extending the piping into a single plane as shown for the portion of the system between *A* and *D*.

The vertical movement at any hanger location will be proportional to its distance from the endpoints:

$$\Delta_1 = {}^4\!/_{31} \times 3.20$$

$$\Delta_1 = 0.41 \text{ in}$$

TABLE B4.10 Thermal Expansion Minimum Allowable Offset Span (Feet-Inches), Straight Steel Pipe, No Socket Weld

Therm. expan., in	Pipe size, NPS (DN)				
	½ (15)	¾ (20)	1 (25)	1½ (40)	2 (50)
0.10	1-5¾	1-8	1-10¼	2-2¾	2-5¾
0.15	1-9¾	2-0¼	2-3¼	2-8¾	3-0½
0.20	2-1¼	2-4	2-7¼	3-1¾	3-6¼
0.25	2-4	2-7¼	2-11¼	3-6¼	3-11
0.30	2-6¾	2-10¼	2-2½	3-10¼	4-3½
0.35	2-9¼	3-1	3-5½	4-1¾	4-7¾
0.40	2-11½	3-3¾	3-8¼	4-5¼	4-11¾
0.45	3-1½	3-6	3-11	4-8½	5-3
0.50	3-3¾	3-8¼	4-1¾	4-11¾	5-6½
0.60	3-7½	4-0½	4-6¼	5-5¼	6-1
0.70	3-10¾	4-4½	4-10½	5-10½	6-6¾
0.80	4-2¼	4-8	5-2¾	6-3¼	7-0¼
0.90	4-5	4-11½	5-6½	6-7¾	7-5¼
1.00	4-8	5-1½	5-10	7-0¾	7-10¼
1.10	4-10¾	5-5¾	6-1¾	7-4¼	8-2¾
1.20	5-1¼	5-8½	6-4¾	7-8¼	8-7
1.50	5-8½	6-4¾	7-1¾	8-7	9-7¼
1.75	6-2¼	6-10¾	7-8½	9-3½	10-4½
1.90	6-5¼	7-2¼	8-0½	9-8	10-9¾
2.00	6-7¼	7-4½	8-3	9-11	11-1
2.50	7-4¾	8-3¼	9-3	11-1½	12-5
3.00	8-1¼	9-0¾	10-1¾	12-2¼	13-7½

1 in = 25.4 mm
1 ft = 0.3048 m

The vertical movement at H-1 = 0.41 in + 2 in:

$$\Delta H\text{-}1 = 2.41 \text{ in up}$$

$$\Delta_2 = {}^{22}\!/_{31} \times 3.20$$

$$\Delta_2 = 2.27 \text{ in}$$

The vertical movement at H-2 = 2.27 in + 2 in:

$$\Delta H\text{-}2 = 4.27 \text{ in up}$$

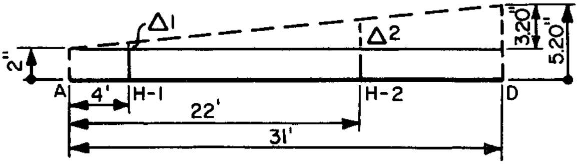

(*a*)

Step 3. To calculate the vertical movement at *H*-3, multiply its distance from *H*-4 by the coefficient of expansion:

$$40 \text{ ft} \times 0.0946 \text{ in/ft} = 3.78 \text{ in}$$

$$\Delta H\text{-}3 = 3.78 \text{ in up}$$

Step 4. The next section of pipe on which there are two points of known movement is the length *E-J.* The movement at *E* was calculated as 1.89 in down:

The movement at *J* is equal to the movement at the terminal point *C* (⅛ in down) plus the amount of expansion of the leg *C-J:*

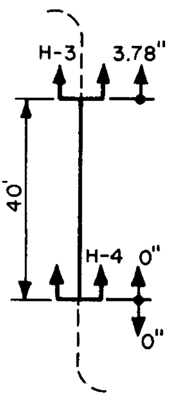

(*b*)

$$\Delta J = 0.125 \text{ in} + 3.5 \text{ ft} \times 0.0946 \text{ in/ft}$$

$$\Delta J = 0.46 \text{ in down}$$

$$\Delta_7 = {}^{3.5}\!/_{42} \times 1.43 = 0.12 \text{ in}$$

$$\Delta H\text{-}7 = 0.12 \text{ in} + 0.46 \text{ in}$$

$$\Delta H\text{-}7 = 0.58 \text{ in down}$$

$$\Delta_6 = {}^{17}\!/_{42} \times 1.43 = 0.58 \text{ in}$$

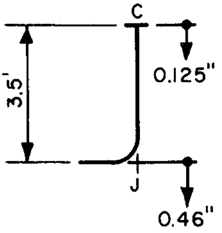

(*a*)

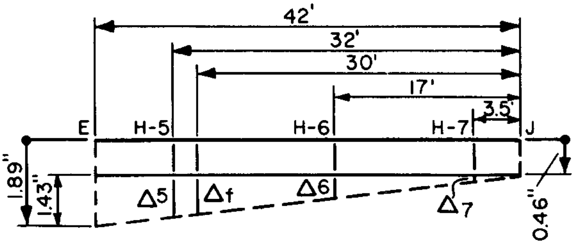

(*b*)

$$\Delta H\text{-}6 = 0.58 + 0.46 \text{ in}$$

$$\Delta H\text{-}6 = 1.04 \text{ in down}$$

$$\Delta_f = {}^{30}\!/_{42} \times 1.43 = 1.02 \text{ in}$$

$$\Delta F = 1.02 + 0.46$$

$$\Delta F = 1.48 \text{ in down}$$

$$\Delta_5 = {}^{32}\!/_{42} \times 1.43 = 1.09 \text{ in}$$

$$\Delta H\text{-}5 = 1.09 + 0.46$$

$$\Delta H\text{-}5 = 1.55 \text{ in down}$$

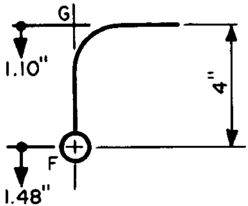

Elevation
(*c*)

Step 5. In the section *G-H,* the movement at *G* is equal to the movement at *F minus* the expansion

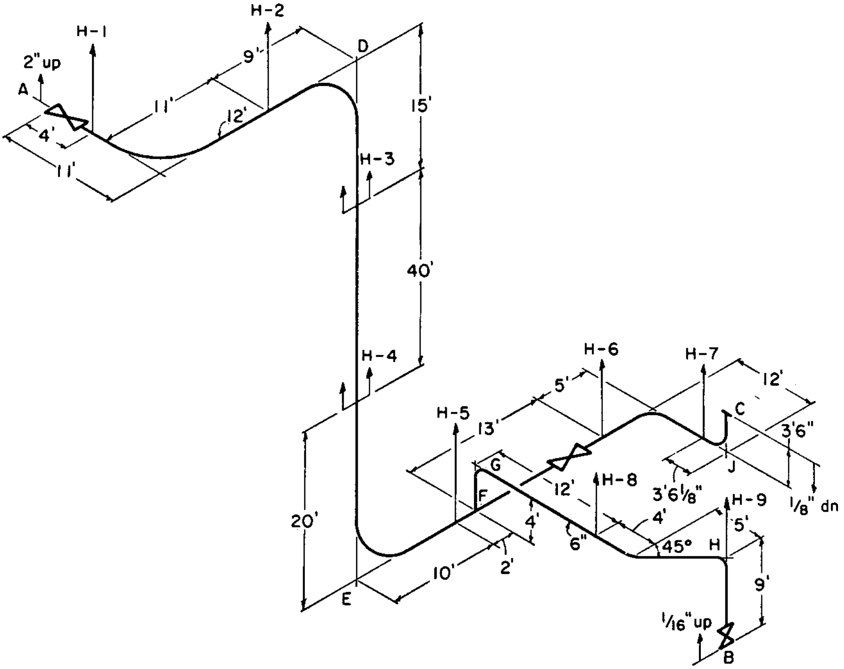
H-1
H-2
2" up
A
4'
11'
11'
9'
12'
D
15'
H-3
40'
H-4
20'
E
10'
2'
4'
F
G
H-5
13'
5'
H-6
H-7
12'
C
3'6"
1/8" dn
J
3'6 1/8"
12'
H-8
6"
4'
45°
H
H-9
5'
9'
1/16" up
B

FIGURE B4.23 One-line piping diagram for calculation of hanger movements. Points *A, B,* and *C* are equipment connections. *H*-1, *H*-2, and so on, represent hanger locations.

of the leg *GF:*

$$\Delta G = 1.48 \text{ in down} - 4 \text{ ft} \times 0.0946 \text{ in/ft}$$

$$\Delta G = 1.10 \text{ in down}$$

The movement at *H* is equal to the movement of the terminal point *B* (1/16 in up) *plus* the expansion of the leg *B-H*:

$$\Delta H = 0.0625 \text{ in up} + 9 \text{ ft} \times 0.0946 \text{ in/ft}$$

$$\Delta H = 0.91 \text{ in up}$$

Since *H*-9 is located at point *H,*

$$\Delta H\text{-}9 = \Delta H = 0.91 \text{ in up}$$

$$\Delta_y = \frac{12 \times 2.01}{23.1} = 1.04 \text{ in}$$

$$\Delta H\text{-}8 = 1.10 - 1.04$$

$$\Delta H\text{-}8 = 0.60 \text{ in down}$$

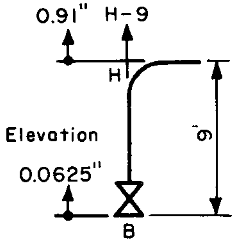

(a)

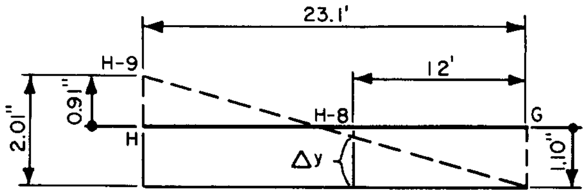

(b)

After calculating the movement at each hanger location it is often helpful, for easy reference when selecting the appropriate type hanger, to make a simple table of hanger movements.

Hanger number	Movement, in
H-1	2.41 up
H-2	4.27 up
H-3	3.78 up
H-4	0
H-5	1.55 down
H-6	1.04 down
H-7	0.58 down
H-8	0.06 down
H-9	0.91 up

1 in = 25.4 mm

Calculation of Hanger Loads. A 6-in medium-temperature steam piping system is shown in Fig. B4.24. Terminal movements at equipment flanges *A* and *B* are indicated; dimensions of system components and physical data are also given. It is required to determine hanger loadings and also to determine movements at each of the hangers *H*-1 through *H*-7.

It is noted that hanger *H*-3 on the vertical leg has been located 20 ft (6.0 m) above the lower horizontal pipe run. Calculations would indicate that the center of gravity of the vertical leg is 16.16 ft (5.0 m) above the lower horizontal run. It would not be desirable to place the hanger at the center of gravity because the hanger would then act as a pivot point and would not resist sway. If the hanger *H*-3 were placed below the center of gravity, an unstable turnover condition would result. The most desirable location is above the center of gravity; hanger *H*-3 has thus been placed arbitrarily a distance of 20 ft (6.0 m) above the lower horizontal piping run.

Starting with equipment flange *A,* the system is broken up into component parts between hangers and hanger reactions are calculated. The procedure is indicated in Figs. B4.25*a* to B4.25*g*, and the results are listed in Table B4.11. Hanger deflections, or movements, are determined as shown in Figs. B4.26*a* and B4.26*b*.

Simplified Seismic Analysis. A simplified seismic analysis utilizing simple beam formulas and response spectrum curves is given here. The maximum support spac-

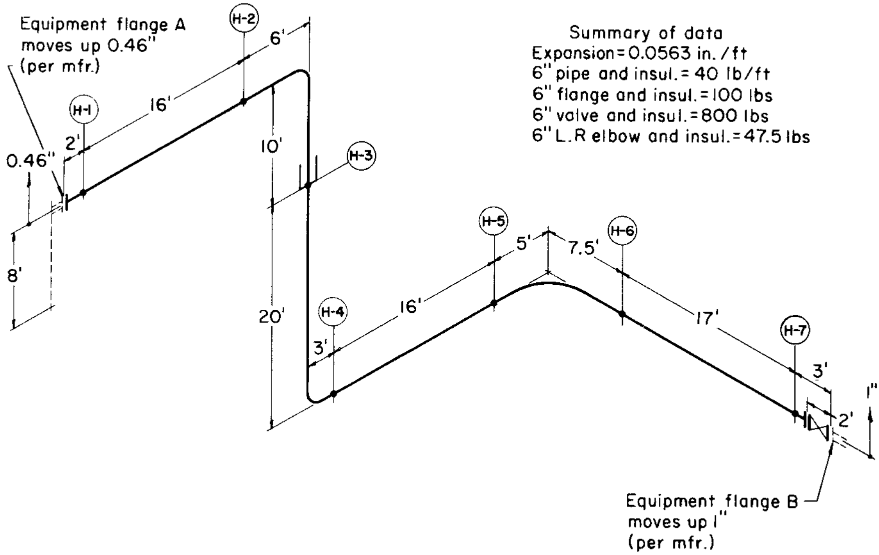
Equipment flange A moves up 0.46" (per mfr.)
H-2
6'
16'
H-1
2'
0.46"
10'
H-3
8'
20'
H-4
3'
16'
H-5
5'
7.5'
H-6
17'
H-7
3'
1"
2'
Equipment flange B moves up 1" (per mfr.)

Summary of data
Expansion = 0.0563 in./ft
6" pipe and insul. = 40 lb/ft
6" flange and insul. = 100 lbs
6" valve and insul. = 800 lbs
6" L.R elbow and insul. = 47.5 lbs

FIGURE B4.24 One-line piping diagram for calculation of hanger loadings and deflections.

ings are selected from Tables B4.12 to B4.14 so that the fundamental frequency of the span is in the rigid range of the response spectrum.

These seismic spans are based on the following formula:

$$L = \left(\frac{1}{12}\right)\left(\frac{\pi}{2f}\right)^{1/2}\left(\frac{12gEI}{W}\right)^{1/4} \tag{B4.69}$$

where L = maximum seismic spacing, ft
f = desired frequency, cycles/s
g = 386 in/s^2
E = modulus of elasticity, psi
I = moment of inertia, in^4
W = distributed weight, lb/ft

For a system with seismic supports designed in the rigid range, the seismic acceleration of the system is low and consequently the design loads for the system decrease.

The corresponding seismic stress is then

$$S = 0.75i(12)\left(\frac{WL^2}{8Z}\right)(1.5G) \tag{B4.70}$$

where Z = section modulus of pipe, in^3
G = seismic acceleration (OBE or SSE) in gs
i = stress intensification factor

The number 1.5 in Eq. (B4.70) is a factor to account for the contribution from the higher modes.[47,60]

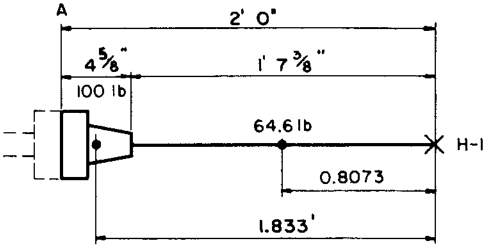

Taking moments about H-1

Ft	X	lb	=	ft-lb
0.8073		64.6	=	52.2
1.833		100.0	=	183.3
		164.6		235.5

Reaction @ flange A $= \frac{235.5}{2.0} = 117.8$ lbs

Reaction @ H-1 $= 164.6 - 117.8 = 46.8$ lbs

(a)

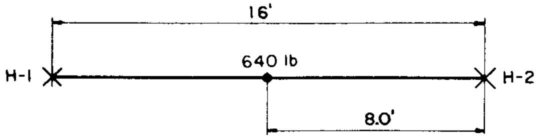

Reactions H-1 and H-2 $= \frac{640}{2} = 320$ lbs

(b)

FIGURE B4.25 (*a*) Distribution of weight between equipment flange *A* and *H*-1. (*b*) Distribution of weight between *H*-1 and *H*-2.

Computerized Method

Types of Computer Programs. The microcomputer has become the daily tool and workstation of the piping stress analyst. Files which contain data for piping stress analysis are created, edited, and saved at this workstation. These files are later transferred to the mini- or mainframe computer for the calculation of piping stresses and support loads.

Most of the computer programs for piping stress analysis such as ADLPIPE, NUPIPE, and SUPERPIPE were developed for use on mainframe computers. With the introduction of many powerful microcomputers in the mid-1980s, microcomputer-based programs for piping stress analysis were also developed such as AUTOPIPE and CAESAR II. Some of these new programs are menu driven and user friendly. Refer to Appendix E9. They help save engineering time and cost. In general, these computer programs may be divided into four classes:

1. Programs that can perform pressure, thermal expansion, deadweight, and external forces (e.g., wind) analyses for ASME Section III, Class 2, 3, ASME B31.1,

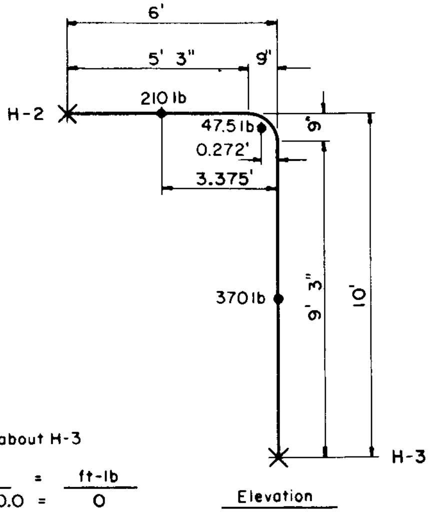
6'
5' 3"
9"
210 lb
H-2
47.5 lb
0.272'
3.375'
9"
370 lb
9' 3"
10'
H-3
Elevation

Taking moments about H-3

Ft.	X	lb	=	ft-lb
0.0		370.0	=	0
0.272		47.5	=	12.9
3.375		210.0	=	708.8
		627.5		721.7

Reaction @ H-2 = $\frac{721.7}{6.0}$ = 120.3 lbs

Reaction @ H-3 = 627.5 − 120.3 = 507.2 lbs

(c)

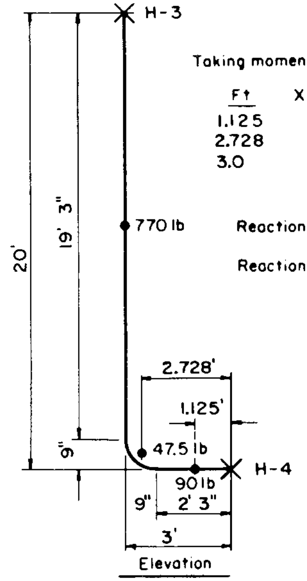
H-3
20'
19' 3"
770 lb
2.728'
1.125'
9"
47.5 lb
H-4
90 lb
9"
2' 3"
3'
Elevation

Taking moments about H-4

Ft	X	lb	=	ft-lb
1.125		90.0	=	101.3
2.728		47.5	=	129.6
3.0		770.0	=	2310.0
		907.5		2540.9

Reaction @ H-3 = $\frac{2540.9}{3.0}$ = 847 lbs

Reaction @ H-4 = 907.5 − 847 = 60.5 lbs

(d)

FIGURE B4.25 (*c*) Distribution of weight between *H*-2 and *H*-3. (*d*) Distribution of weight between *H*-3 and *H*-4.

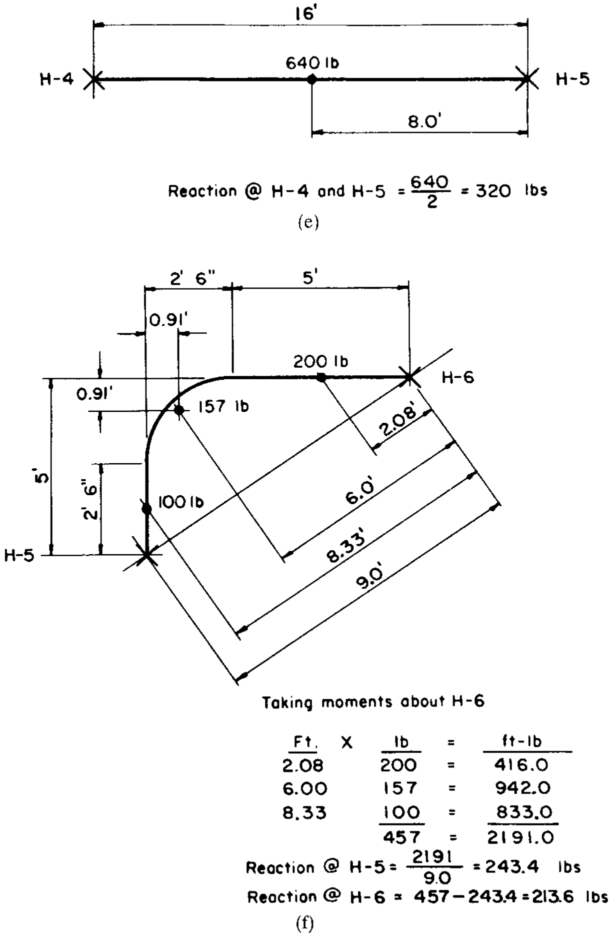

Reaction @ H-4 and H-5 = $\frac{640}{2}$ = 320 lbs

(e)

Taking moments about H-6

Ft. X	lb =	ft-lb
2.08	200 =	416.0
6.00	157 =	942.0
8.33	100 =	833.0
	457 =	2191.0

Reaction @ H-5 = $\frac{2191}{9.0}$ = 243.4 lbs

Reaction @ H-6 = 457 − 243.4 = 213.6 lbs

(f)

FIGURE B4.25 (*e*) Distribution of weight between *H*-4 and *H*-5. (*f*) Distribution of weight between *H*-5 and *H*-6.

B31.3, B31.4, B31.5, B31.8, NEMA, API-610, and API-617 piping. Programs such as TRIFLEX, AUTOPIPE, and CAESAR II are in this class. (AUTOPIPE and CAESAR II have response spectrum and SAM analysis capability. However, there is a limit on the number of analyses which can be performed in the same computer run because of the memory capability of microcomputers.)

2. Programs that can perform seismic, independent support motion, thermal transient, and time-history analyses in addition to those mentioned in item 1 for ASME Section III, Class 1, 2, 3, ASME B31.1, and B31.3 piping. Programs such as ADLPIPE, ME101, NUPIPE, PIPESD, and SUPERPIPE are in this class.
3. General-purpose programs, such as ANSYS. ANSYS is a general-purpose finite element analysis program which can perform static and dynamic analysis; elastic

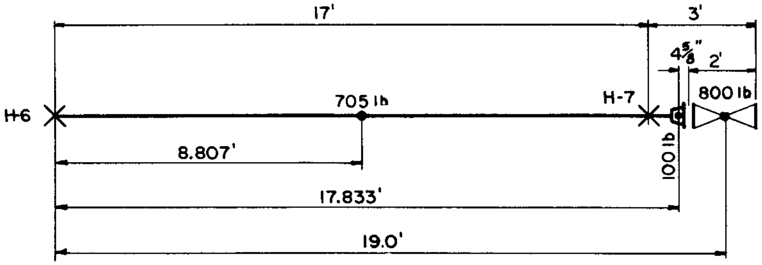

Taking moments about H-6

Ft	X	lb	=	ft-lb
8.807		705	=	6210
17.833		100	=	1783
19.0		800	=	15200
		1605		23193

$$\text{Reaction @ H-7} = \frac{23193}{17.0} = 1364 \text{ lbs}$$

Reaction @ H-6 = 1605 − 1364 = 241 lbs

FIGURE B4.25 (*g*) Distribution of weight between *H*-6 and *H*-7 to maintain zero reaction on flange *B*.

TABLE B4.11 Summary of Hanger Loadings

Hanger mark	Reactions, lb							Hanger load, lb
	A to *H*-1	*H*-1 to *H*-2	*H*-2 to *H*-3	*H*-3 to *H*-4	*H*-4 to *H*-5	*H*-5 to *H*-6	*H*-6 to *H*-7	
Flange *A*	117.8	....	....	....	....	....	....	117.8
H-1	46.8	320.0	....	....	....	....	....	366.8
H-2	....	320.0	120.3	....	....	....	....	440.3
H-3	....	....	507.2	847.0	....	....	....	1,354.2
H-4	....	....	....	60.5	320.0	....	....	380.5
H-5	....	....	....	....	320.0	243.4	....	563.4
H-6	....	....	....	....	....	213.6	241.0	454.6
H-7	....	....	....	....	....	....	1364.0	1,364.0
Flange *B*	....	....	....	....	....	....	0.0	0.0

1 lb = 4.448 N

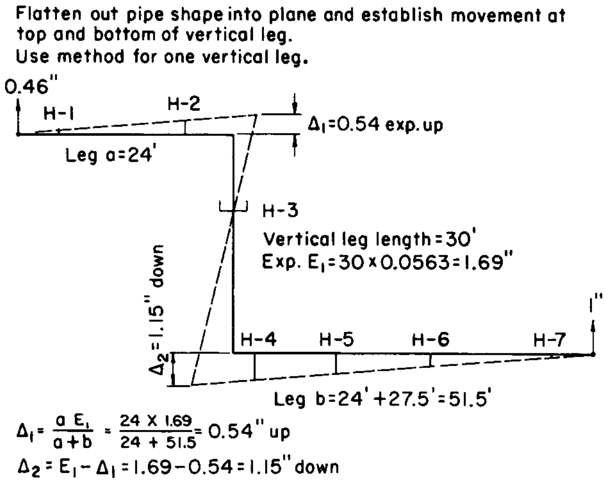
Flatten out pipe shape into plane and establish movement at top and bottom of vertical leg.
Use method for one vertical leg.
0.46"
H-1
H-2
Δ₁=0.54 exp. up
Leg a=24'
H-3
Vertical leg length=30'
Exp. E₁=30×0.0563=1.69"
Δ₂=1.15" down
1"
H-4
H-5
H-6
H-7
Leg b=24'+27.5'=51.5'
Δ₁ = a E₁ / (a+b) = 24 X 1.69 / (24 + 51.5) = 0.54" up
Δ₂ = E₁ − Δ₁ = 1.69−0.54 = 1.15" down

(a)

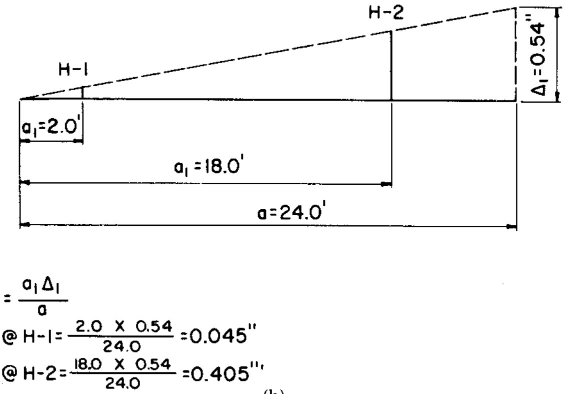
H-2
H-1
Δ₁=0.54"
a₁=2.0'
a₁ =18.0'
a=24.0'
Δx = a₁Δ₁ / a
Δx @ H-1 = 2.0 X 0.54 / 24.0 = 0.045"
Δx @ H-2 = 18.0 X 0.54 / 24.0 = 0.405"

(b)

FIGURE B4.26 (a) Deflections of vertical leg of Fig. B4.24. (b) Determination of deflections at *H*-1 and *H*-2 of Fig. B4.24.

and plastic analysis; steady-state and transient heat transfer; steady-state fluid flow analyses; and nonlinear time-history analyses. There are 40 different finite elements available for static and dynamic analysis. Dynamic analyses can be performed either by modal superposition or direct integration.[54]

4. Specialized programs such as PIPERUP. PIPERUP performs nonlinear elastic-plastic analyses of piping systems subjected to concentrated static or dynamic time-history forcing functions. These forces result from fluid jet thrusts at the location of a postulated break in high-energy piping. PIPERUP is an adaptation of the finite element method to the specific requirements of pipe rupture analysis.[55]

TABLE B4.12 Maximum Support Spacing for Seismic Stress for a Frequency of 20 Hz (Feet-Inches), Steel Pipe

			Antisweat*		Calcium silicate*					Reflective*
NPS (DN)	Pipe sch.	No insul.	½ in	1 in	½ in	1 in	1½ in	2 in	2½ in	4 in
½ (15)	40	5-4	4-11	4-8	4-9	4-5	4-2	3-10	3-8	3-3
	80	5-4	4-11	4-9	4-10	4-6	4-3	4-0	3-9	3-5
	160	5-3	4-11	4-9	4-10	4-6	4-3	4-0	3-10	3-5
¾ (20)	40	6-0	5-7	5-4	5-5	5-1	4-10	4-7	4-4	3-11
	80	6-0	5-7	5-5	5-6	5-3	4-11	4-8	4-5	4-1
	160	5-11	5-7	5-5	5-6	5-3	5-0	4-9	4-7	4-2
1 (25)	40	6-9	6-4	6-2	6-3	5-11	5-8	5-4	5-1	4-8
	80	6-9	6-5	6-3	6-4	6-0	5-9	5-6	5-3	4-10
	160	6-8	6-5	6-3	6-4	6-1	5-10	5-7	5-5	5-0
1½ (40)	40	8-0	7-8	7-6	7-7	7-4	7-1	6-9	6-7	6-1
	80	8-1	7-10	7-8	7-9	7-6	7-3	7-0	6-9	6-4
	160	8-1	7-10	7-9	7-9	7-7	7-4	7-2	6-11	6-7
2 (50)	40	8-11	8-7	8-5	8-6	8-3	8-0	7-9	7-6	7-1
	80	9-1	8-9	8-8	8-8	8-6	8-3	8-0	7-10	7-5
	160	9-1	8-10	8-9	8-9	8-7	8-5	8-3	8-1	7-8

* Insulation type. 1 in = 25.4 mm, 1 ft = 0.3048 m

TABLE B4.13 Maximum Support Spacing for Seismic Stress for a Frequency of 25 Hz (Feet-Inches), Steel Pipe

			Antisweat*		Calcium silicate*					Reflective*
NPS (DN)	Pipe sch.	No insul.	½ in	1 in	½ in	1 in	1½ in	2 in	2½ in	4 in
½ (15)	40	4-10	4-4	4-2	4-3	4-0	3-8	3-6	3-3	2-11
	80	4-9	4-5	4-3	4-4	4-0	3-9	3-7	3-4	3-0
	160	4-8	4-5	4-3	4-4	4-1	3-10	3-7	3-5	3-1
¾ (20)	40	5-4	5-0	4-9	4-11	4-7	4-4	4-1	3-10	3-6
	80	5-4	5-0	4-10	4-11	4-8	4-5	4-2	4-0	3-7
	160	5-3	5-0	4-10	4-11	4-8	4-6	4-3	4-1	3-9
1 (25)	40	6-0	5-8	5-6	5-7	5-4	5-0	4-10	4-7	4-2
	80	6-0	5-9	5-7	5-8	5-5	5-2	4-11	4-9	4-4
	160	5-11	5-8	5-7	5-8	5-5	5-3	5-0	4-10	4-6
1½ (40)	40	7-2	6-10	6-9	6-9	6-6	6-4	6-1	5-10	5-5
	80	7-3	7-0	6-10	6-11	6-8	6-6	6-3	6-1	5-8
	160	7-3	7-0	6-11	6-11	6-9	6-7	6-5	6-2	5-10
2 (50)	40	8-0	7-8	7-7	7-7	7-4	7-2	6-11	6-9	6-4
	80	8-1	7-10	7-9	7-9	7-7	7-5	7-2	7-0	6-7
	160	8-1	7-11	7-10	7-10	7-8	7-6	7-4	7-2	6-10

* Insulation type. 1 inch = 25.4 mm, 1 ft = 0.3048 m

TABLE B4.14 Maximum Support Spacing for Seismic Stress for a Frequency of 33 Hz (Feet-Inches), Steel Pipe

NPS (DN)	Pipe sch.	No insul.	Antisweat*		Calcium silicate*					Reflective*
			½ in	1 in	½ in	1 in	1½ in	2 in	2½ in	4 in
½ (15)	40	4-2	3-9	3-7	3-8	3-5	3-2	3-0	2-9	2-6
	80	4-1	3-10	3-8	3-9	3-5	3-3	3-1	2-10	2-7
	160	4-1	3-10	3-8	3-9	3-6	3-4	3-1	2-11	2-8
¾ (20)	40	4-7	4-4	4-1	4-3	3-11	3-9	3-6	3-4	3-0
	80	4-7	4-4	4-2	4-3	4-0	3-10	3-7	3-5	3-1
	160	4-6	4-4	4-2	4-3	4-0	3-11	3-8	3-6	3-3
1 (25)	40	5-2	4-11	4-9	4-10	4-7	4-4	4-2	3-11	3-7
	80	5-2	5-0	4-10	4-11	4-8	4-5	4-3	4-1	3-9
	160	5-1	4-11	4-10	4-11	4-8	4-6	4-4	4-2	3-11
1½ (40)	40	6-2	5-11	5-10	5-10	5-7	5-6	5-3	5-0	4-8
	80	6-3	6-1	5-11	6-0	5-9	5-7	5-5	5-3	4-11
	160	6-3	6-1	6-0	6-0	5-10	5-8	5-7	5-4	5-0
2 (50)	40	6-11	6-8	6-7	6-7	6-4	6-2	6-0	5-10	5-6
	80	7-0	6-9	6-8	6-8	6-7	6-5	6-2	6-1	5-8
	160	7-0	6-10	6-9	6-9	6-8	6-6	6-4	6-2	5-11

* Insulation type. 1 inch = 25.4 mm, 1 ft = 0.3048 m

Method of Analysis. The piping system is modeled as a series of masses connected by massless springs having the properties of the piping. The mathematical model should include the effects of piping geometry changes, elbow flexibilities, concentrated weights, changes in piping cross sections, and any other parameters affecting the stiffness matrix of the model. Mass point spacing should follow the guidelines specified above. Valves should be modeled as lumped masses at valve body and operator, with appropriate section properties for valve body and valve topworks. Rigid supports, snubbers, springs, and equipment nozzles should be modeled with appropriate spring rates in particular degree of freedom. Stress intensification factors should be input at the appropriate locations (elbows, tees, branch connections, welds, etc.). Piping distributed weight should include pipe weight, insulation weight, and entrained fluid weight.

Once an accurate model is developed, the loading conditions are applied mathematically:

1. Statically applied loads (deadweight, wind loads, pressure thrust, etc.)
2. Thermal expansion
3. Statically applied boundary condition displacements (seismic anchor movement, LOCA containment displacement, etc.)
4. Response spectrum analysis (seismic, etc.)
5. Dynamically applied boundary condition displacements (LOCA motion, etc.)
6. Dynamically applied forcing functions (steam hammer, etc.)

The results of the analyses should be examined in order to determine if all allowables are met (i.e., piping stress, valve acceleration, nozzle loads, etc.). The loads must be combined using the appropriate load combinations and submitted to structural designers for their analysis.

PROCEDURES FOR THE DESIGN OF RESTRAINED UNDERGROUND PIPING

This section is reproduced by the courtesy of ASME B31.1.

Foreword

The B31.1 Code contains rules governing the design, fabrication, materials, erection, and examination of power piping systems. Experience over the years has demonstrated that these rules may be conservatively applied to the design and analysis of buried piping systems. However, the ASME B31.1 rules were written for piping suspended in open space, with the supports located at local points on the pipe. Buried piping, on the other hand, is supported, confined, and restrained continuously by the passive effects of the backfill and the trench bedding. The effects of continuous restraint cannot be easily evaluated by the usual methods applied to exposed piping, since these methods cannot easily accommodate the effects of bearing and friction at the pipe/soil interface. Accordingly, this section has been prepared to illustrate and clarify the application of B31.1 Code rules to restrained buried piping.

All components in the buried piping system must be given consideration, including the building penetrations, branches, bends, elbows, flanges, valves, grade penetrations, and tank attachments. It is assumed that welds are made in accordance with the B31.1. Code and that appropriate corrosion protection procedures are followed for buried piping.

This section provides analytic and nomenclature definition figures to assist the designer, and is not intended to provide actual design layout.

Scope

The scope of this section is confined to the design of buried piping as defined in Pa+ expansion in buried piping affects the forces, the resulting bending moments and stresses throughout the buried portions of the system, particularly at the anchors, building penetrations, buried elbows and bends, and branch connections, and it is the designer's responsibility to consider these forces. This section, however, deals only with the buried portions of the system, and not the complete system.

The design and analysis of buried piping requires that careful attention be paid to:

1. All loads acting on the system
2. The forces and the bending moments in the piping and piping components resulting from the loads
3. The loading and stress criteria
4. General design practices

Definitions

Confining Pressure the pressure imposed by the compacted backfill and overburden on a buried pipe. Confining pressure is assumed to act normal to the pipe circumference.

Flexible Coupling a piping component that permits a small amount of axial or angular movement while maintaining the pressure boundary

Friction the passive resistance of soil to axial movement. Friction at the pipe/soil interface is a function of confining pressure and the coefficient of friction between the pipe and the backfill material. Friction forces exist only where there is actual or impending slippage between the pipe and soil.

Influence Length that portion of a transverse pipe run which is deflected or ''influenced'' by pipe thermal expansion along the axis of the longitudinal run

Modulus of Subgrade Reaction the rate of change of soil bearing stress with respect to compressive deformation of the soil. It is used to calculate the passive spring rate of the soil.

Penetration the point at which a buried pipe enters the soil either at grade or from a wall or discharge structure

Settlement the changes in volume of soil under constant load which result in the downward movement, over a period of time, of a structure or vessel resting on the soil

Virtual Anchor a point or region along the axis of a buried pipe where there is no relative motion at the pipe/soil interface

Nomenclature

a, b, c = quadratic equation functions

A = cross-sectional metal area of pipe, in^2

A_c = surface area of a 1-in long pipe segment, in^2

B_d = trench width at grade, in

C_D = soil bearing parameter from Table B4.15, dimensionless

C_k = horizontal stiffness factor for backfill [61],[2] dimensionless

D = pipe outside diameter, in

dL = length of pipe element, in

E = Young's modulus for pipe, psi

f = unit friction force along pipe, lb/in

$f_{\min}, f_{\max}$ = minimum, maximum unit friction force on pipe, lb/in

F_f = total friction force along effective length, lb

$F_{\max}$ = maximum axial force in pipe, lb

H = pipe depth below grade, in

I = pipe section moment of inertia, in^4

k = soil modulus of subgrade reaction, psi

k_h = soil horizontal modulus of subgrade reaction, psi

$k_{i,j}$ = orthogonal soil springs on pipe, lb/in

k_v = soil vertical modulus of subgrade reaction, psi

L_1 = length of transverse pipe run, in

L_2 = length of longitudinal pipe run, in

L_m = minimum slippage length of pipe, in

L' = effective slippage length for short pipes, in

L'' = effective slippage length for long pipes, in

n = number of modeling elements for pipe springs, dimensionless

N_h = horizontal force factor,[61] dimensionless

P = maximum operating pressure in pipe, psi

P_c = confining pressure of backfill on pipe, psi

S_A = allowable expansion stress range, psi

SE = expansion stress, psi

S_h = basic material allowable stress at T degrees fahrenheit, psi

t = pipe wall thickness, in

T = maximum operating temperature, °F

T_o = ambient temperature of pipe, °F

w = soil density, pcf, pci

W_p = unit weight of pipe and contents, lb/in

α = coefficient of thermal expansion of pipe, in/in/°F

β = pipe/soil system characteristic,[62] in^{-1}

ε = pipe unit thermal expansion, in/in

μ = coefficient of friction, dimensionless

Ω = effective length parameter, in

1 inch = 25.4 mm

1 lb = 4.448 N

1 psi = 6894.8 Pa

deg F = 1.8 deg C + 32

Loads

Thermal Expansion. Thermal displacements at the elbows, branch connections, and flanges in a buried piping system and the forces and moments resulting from the displacements may be determined by analyzing each buried run of pipe by the method described in this section.

Installations with Continuous Runs. For buried piping installations that contain continuous runs without flexible couplings, the passive restraining effects of soil bearing on the transverse legs at the ends of long runs subject to thermal expansion may be significant and result in high axial forces and elbow or branch connection bending moments.

Installations with Flexible Couplings. For buried piping installations that incorporate flexible couplings into the pipe runs subject to thermal expansion, the bending moments and stresses may be substantially reduced. However, the flexible couplings must be chosen carefully to accommodate the thermal expansion in the pipe, and the friction forces or stiffness in the coupling must be considered.

Installations with Penetration Anchors. For buried piping systems in which the building penetration provides complete restraint to the pipe, it is necessary to calculate the penetration reactions to thermal expansion in the initial buried run. If this run incorporates flexible couplings, piping reactions at the penetration resulting from unbalanced forces due to internal pressure must be considered.

Installations with Flexible Penetrations. For buried piping systems in which the building penetrations permit some axial or angular movements, the interaction between the buried run outside the penetration and the point-supported portion of the system inside the building must be considered.

Pressure. Pressure loads in buried piping are important for two primary reasons:

1. In pipe runs which incorporate flexible couplings, there is no structural tie between the coupled ends, with the result that internal pressure loads must be reacted externally. External restraint may be provided by thrust blocks, external anchors, soil resistance to elbows or fittings at each end of the pipe run, or by control rods across the coupling. Where one or both of the ends terminate at a penetration or an anchor, or at connected equipment such as a pump or vessel, the pressure forces can be quite high and must be considered in the anchor or equipment design.

2. For discharge structures, the reaction forces due to upstream pressure and mass flow momentum in the discharge leg may be high and must be considered in the design of the last elbow or bend before the discharge.

Earthquake. An earthquake subjects buried piping to axial loads and bending moments from soil strain due to seismic waves, or from ground faulting across the axis of the pipe. The seismic soil strain can be estimated for a design earthquake in a specific geographical region, from which design values for forces and moments in buried piping can be calculated. However, consideration of the magnitude and effects of seismic ground faulting on buried piping is beyond the scope of this section.

Calculations

The calculations for stresses in restrained underground piping are carried out in four steps, as follows.

Assembling the Data. The pipe material and dimensions, soil characteristics, and operating conditions must be established:

Pipe Data

1. Pipe outside diameter D, in
2. Wall thickness t, in
3. Length of pipe runs L_1 (transverse) and L_2 (longitudinal), in
4. Young's modulus E, psi
5. Pipe depth below grade H, in

Soil Characteristics

1. Soil density w, pcf (from site tests)
2. Type of backfill
3. Pipe trench width at grade B_d, in
4. Range of coefficient of friction μ between pipe and backfill

Operating Conditions

1. Maximum operating pressure P, psi
2. Maximum pipe temperature T, °F
3. Ambient pipe temperature T_o, °F
4. Pipe coefficient of thermal expansion α, in/in/°F

Calculations of Intermediate Parameters. The following parameters must be calculated:

Maximum Relative Strain ε at the Pipe/Soil Interface, in/in. For thermal expansion, this is the unit thermal elongation of the unrestrained pipe,

$$\varepsilon = \alpha(T - T_o) \tag{B4.71}$$

where α = coefficient of thermal expansion
$T - T_o$ = difference between operating and installation temperatures

Modulus of Subgrade Reaction k, psi. This is a factor which defines the resistance of the soil or backfill to pipe movement due to the bearing pressure at the pipe/soil interface. Several methods for calculating k have been developed in recent years by Audibert and Nyman, Trautmann and O'Rourke, and others.[63–67] For example,[61] for pipe movement horizontally, the modulus of subgrade k_h may be found by

$$k_h = C_k N_h w D \text{ psi} \tag{B4.72}$$

where C_k = a dimensionless factor for estimating horizontal stiffness of compacted backfill. C_k may be estimated at 20 for loose soil, 30 for medium soil, and 80 for dense or compacted soil.
w = soil density, lb/in^3
D = pipe outside diameter, in
N_h = a dimensionless horizontal force factor from Fig. 8 of Ref. 61. For a typical value where the soil internal friction angle is 30°, the curve from Ref. 61 may be approximated by a straight line defined by

$$N_h = 0.285H/D + 4.3$$

where H = the depth of pipe below grade at the pipe centerline, in

For pipe movement upward or downward, the procedures recommended in Ref. 63 may be applied. Conservatively, the resistance to upward movement may be considered the same as for horizontal movement with additional consideration for the weight of the soil. Resistance to downward movement may conservatively be considered as rigid for most expansion stress analysis.

Unit Friction Force at the Pipe/Soil Interface f.

$$f = \mu(P_c A_c + W_p) \text{ lb/in} \tag{B4.73}$$

where μ = coefficient of friction between pipe and soil
P_c = confining pressure of soil on pipe, psi
A_c = surface area of a pipe segment, in^2
W_p = unit weight of pipe and contents, lb/in

For piping which is buried within 3 pipe diameters of the surface, confining pressure P_c may be estimated by

$$P_c = wH \text{ lb/in}^2$$

where w = the soil density, lb/in
H = the depth below grade, in

For piping which is buried more than 3 pipe diameters below grade, confining pressure P_c is found by using the modified Marston equation[67]:

$$P_c = wC_D B_D \text{ lb/in}^2$$

where C_D = a dimensionless parameter obtained from Table B4.15
B_D = the trench width, with a maximum value of 24 in plus the pipe diameter

TABLE B4.15 Approximate Safe Working Values of C_D for Use in Modified Marston Formula

Ratio H/B_D	Damp topsoil and dry and wet sand	Saturated topsoil	Damp yellow clay	Saturated yellow clay
0.5	0.46	0.47	0.47	0.48
1.0	0.85	0.86	0.88	0.90
1.5	1.18	1.21	1.25	1.27
2.0	1.47	1.51	1.56	1.62
2.5	1.70	1.77	1.83	1.91
3.0	1.90	1.99	2.08	2.19
3.5	2.08	2.18	2.28	2.43
4.0	2.22	2.35	2.47	2.65
4.5	2.34	2.49	2.53	2.85
5.0	2.45	2.61	2.19	3.02
5.5	2.54	2.72	2.90	3.18
6.0	2.61	2.91	3.01	3.32
6.5	2.68	2.89	3.11	3.44
7.0	2.73	2.95	3.19	3.55
7.5	2.78	3.01	3.27	3.65
8.0	2.82	3.06	3.33	3.74
9.0	2.88	3.14	3.44	3.89
10.0	2.92	3.20	3.52	4.01
11.0	2.95	3.25	3.59	4.11
12.0	2.97	3.28	3.63	4.19
13.0	2.99	3.31	3.67	4.25
14.0	3.00	3.33	3.70	4.30
15.0	3.01	3.34	3.72	4.34
∞	3.03	3.38	3.79	4.50

Pipe/Soil System Characteristic[62]

$$\beta = [k/(4EI)]^{1/4} \text{ in}^{-1} \tag{B4.74}$$

where k = soil modulus of subgrade reaction k_h or k_v, psi
E = Young's modulus for pipe, psi
I = area moment of inertia for pipe, in^4

Minimum Slippage Length L_m[68]

$$L_m = \varepsilon AE/f \text{ in} \tag{B4.75}$$

where A = pipe cross-section area

Maximum Axial Force F_{max} in the Longitudinal Pipe Run. The maximum axial force in a pipe long enough for friction force to develop to the point where a region of the pipe is totally restrained longitudinally by the soil is found by

$$F_{\max} = fL_m = \varepsilon AE \text{ lb} \tag{B4.76}$$

Classification of the Pipe Runs

Purpose. The classification and subclassification of the buried pipe elements is used in choosing the proper equation for effective slippage length L' or L'' which is then used in calculating piping forces and stresses. The pipe segment identified by the dimension L' or L'' always begins at either an elbow, bend, tee, or branch connection and terminates at the point (described below as the *virtual anchor*) at which there is no slippage or relative movement at the pipe/soil interface.

Classification of the Pipe Elements. It is in the bends, elbows, and branch connections that the highest stresses are found in buried piping subject to thermal expansion of the pipe. These stresses are due to the soil forces that bear against the transverse run (the run running perpendicular or at some angle to the direction of the pipe expansion). The stresses are proportional to the amount of soil deformation at the elbow or branch connection.

Piping elements are divided into three major categories depending upon what type of transverse element is being analyzed, as follows:

Category A. Elbow or bend (see Fig. B4.27)

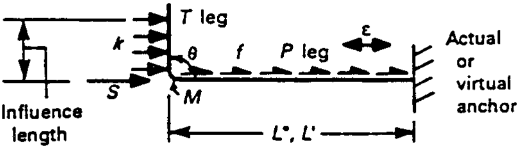
T leg
k
θ
f
P leg
ε
Actual or virtual anchor
S
M
Influence length
L″, L′

FIGURE B4.27 Element category A, elbow or bend.

Category B. Branch pipe joining the longitudinal run (see Fig. B4.28)

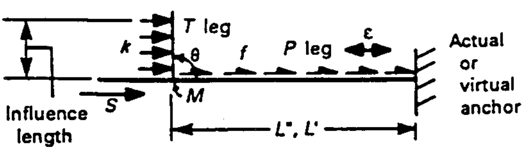
T leg
k
θ
f
P leg
ε
Actual or virtual anchor
S
M
Influence length
L″, L′

FIGURE B4.28 Element category B, branch pipe joining the P leg.

Category C. Longitudinal run ending in a tee (see Fig. B4.29)

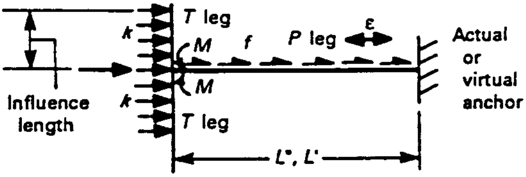
T leg
k
M
f
P leg
ε
Actual or virtual anchor
M
Influence length
k
T leg
L″, L′

FIGURE B4.29 Element category C, tee on end of P leg.

Category D. Straight pipe, no branch or transverse run (see Fig. B4.30)

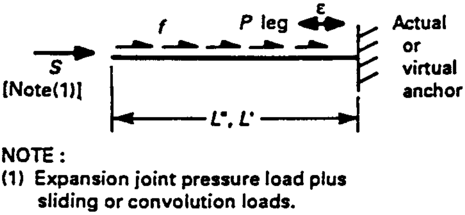
f
P leg
ε
Actual or virtual anchor
S [Note(1)]
L″, L′
NOTE:
(1) Expansion joint pressure load plus sliding or convolution loads.

FIGURE B4.30 Element category D, straight pipe.

Categories A, B, and C are further divided into three subcategories depending on the configuration of the pipe run at the end opposite that being analyzed. The piping elements are classified as follows:

A1, B1, C1. Other end free or terminating in a flexible coupling or joint

A2, B2, C2. Other end contains an elbow or tee

A3, B3, C3. Other end is anchored

Category D elements include straight runs between an anchor (either actual or virtual) and a free end or a pipe section that is connected to an expansion joint.

The elements are further broken down into subtypes depending upon whether the longitudinal run (the pipe or P leg) and the transverse run (called the T leg) are long or short with respect to certain criteria. The transverse or T leg is the run against which the soil bears, producing an in-plane bending moment in elbow, branch, or tee. (Category D elements have no transverse leg.)

The strict criterion for a long or short transverse leg is whether the length of the transverse run L_1 is longer or shorter than $3\pi/4\beta$, the length at which the hyperbolic functions in Hetenyi's equations,[62] approach unity. The critical value for L_1 is often called the *influence* length, or that portion of transverse or T run which is deflected or "influenced" by seismic soil strain or pipe thermal expansion along the axis of the longitudinal or P run. In practice, a critical influence length L_1 of $1/\beta$ to $1.2/\beta$ may often be used, since there is very little deformation or load in that portion of the transverse run which exceeds this length. This implies that the vast majority of the bearing load on the transverse or T leg occurs in the first several feet of the pipe at the bend or branch. In summary, a transverse pipe is "long" if

$$L_1 \geq 3\pi/4\beta \text{ (conservative)}$$

or

$$L_1 \geq 1/\beta \text{ to } 1.2/\beta \text{ (usually acceptable)}$$

The criterion for a short or long P leg is whether its length L_2 is sufficiently long to experience the maximum force that can develop at the friction interface. For full maximum friction force ($F_{\max} = \varepsilon AE$) to occur in a straight pipe axially free at each end, its length L_2 would have to equal or exceed $2L_m$ with L_m calculated by Eq. (B4.75). If one end terminates in an elbow or a tee, with the other end remaining axially unrestrained, the total length L_2 necessary for full friction to develop is $L'' + L_m$; the friction force over L_m is equal to the soil bearing force S plus the friction force acting on the length L' or L'', which is called the *effective slippage length.* The effective slippage length is the maximum length along which slippage occurs at the pipe/soil interface of a pipe with a transverse leg or branch. The effective slippage length L'' for long pipes with long transverse legs is calculated by

$$L'' = \Omega[(1 + 2F_{\max}/f\Omega)^{1/2} - 1] \text{ in} \tag{B4.77}$$

where $\Omega = AE\beta/k$ and $F_{\max}$ is calculated by Eq. (B4.76).

Equation (B4.77) applies to bends, tees, and branches. Although Eq. (B4.77) was developed for the case where $L_2 = L'' + L_m$, it applies also for any case where $L_2 > L'' + L_m$, since the length of the region where there is zero slippage at the friction interface is immaterial.[68] Using L'' as calculated by Eq. (B4.77), it can now be established that a P leg is classified long if it meets these criteria:

1. For Types A1, B1, C1, $L_2 \geq L_m + L''$;
2. For Types A2, B2, C2, $L_2 \geq 2\,L''$;
3. For Types A3, B3, C3, D, $L_2 \geq L''$.

That point which is located a distance L' or L'' from the bend, branch, or tee, is called the virtual anchor, since it acts as if it were a three-axis restraint on the pipe.

Locating the Virtual Anchor. Calculation of the forces and moments in buried piping at the changes in direction requires that the location of the virtual anchor (the effective slippage length L' away from the bend or branch element) in the P run and the deformation δ of the soil at the buried element be established. For elements of all types with long P legs, L'' may be calculated by Eq. (B4.77).

For Types A1, B1, and C1 elements (with one end of the P leg free or unrestrained axially) with "short" P legs, L' must be found by a less direct method as follows[68]:

$$L' = [-b + (b^2 - 4ac)^{1/2}]/2a \text{ in} \tag{B4.78}$$

where $a = 3f/(2AE)$
$b = \varepsilon - fL_2/(AE) + 2f\beta/k$
$c = -f\beta L_2/k$

However, the most highly stressed runs in a buried piping system typically are restrained at both ends, either by a combination of transverse runs or a transverse run and an anchor (either real or virtual).

For Types A2, B2, and C2 elements with short P legs, L' is expressed by

$$L' = L_2/2 \text{ in} \tag{B4.79}$$

For Types A3, B3, C3, and D elements with short P legs, L' is expressed by

$$L' = L_2 \text{ in} \tag{B4.80}$$

Computer Modeling of Buried Piping

Determination of Stresses. With f, k, and L' or L'' established, the stresses in a buried pipe due to thermal expansion can be determined with a general purpose pipe stress computer program. A buried piping system can be modeled with a typical mainframe or microcomputer pipe stress program by breaking the buried portions into elements of convenient length and then imposing a transverse spring at the center of each element to simulate the passive resistance of the soil. The entire pipe can be divided into spring-restrained elements in this manner; however, the only regions of the pipe that really need to be modeled in this manner are the lengths entering and leaving elbows or tees. The analyst should refer to the program users' manual for guidance in modeling soil springs.

All pipe stress computer programs with buried piping analysis options require that the following factors be calculated or estimated:

1. Location of the virtual anchor (dimension L' or L'')
2. Soil spring rate $k_{i,j}$, which is a function of the modulus of subgrade reaction k.
3. Influence length, also a function of k.

Some programs ignore the friction at the pipe/soil interface; this is conservative for calculating bending stresses on the buried elbows and branch connections, but may be unconservative for calculating anchor reactions.

Determination of Element Lengths. The element lengths and transverse soil spring rates for each element are calculated by the following procedure:

1. Establish the element length dL and the number n of elements, as follows:

(A) Set the element length to be equal to between 2 and 3 pipe diameters. For example, dL for a NPS 6 may be set at either 1 ft or 2 ft, whichever is more convenient for the analyst.

(B) Establish the number n of elements by:

$$n = (3\pi/4\beta)/dL \qquad \text{(B4.81)}$$

This gives the number of elements, each being dL inches in length, to which springs are to be applied in the computer model. The number n of elements is always rounded up to an integer.

2. Calculate the lateral spring rate $k_{i,j}$ to be applied at the center of each element.

$$k_{i,j} = kdL \text{ lb/in} \qquad \text{(B4.82)}$$

where k = the modulus of subgrade reaction calculated from Eq. (B4.72).

3. Calculate the equivalent axial load necessary to simulate friction resistance to expansion. The friction resistance at the pipe/soil interface can be simulated in the computer model by imposing a single force F_f in a direction opposite that of the thermal growth.

$$F_f = fL'/2 \text{ or } fL''/2 \text{ lb} \qquad \text{(B4.83)}$$

4. Incorporate the springs and the friction force in the model. The mutually orthogonal springs $k_{i,j}$ are applied to the center of each element, perpendicular to the pipe axis. Shorter elements, with proportionally smaller values for the springs on these elements, may be necessary in order to model the soil restraint at elbows and bends. The friction force F_f for each expanding leg is imposed at or near the elbow tangent node, opposite to the direction of expansion.

Determination of Soil Parameters. Soil parameters are difficult to establish accurately due to variations in backfill materials and degree of compaction. Consequently, values for elemental spring constants on buried pipe runs can only be considered as rational approximations. Stiffer springs can result in higher elbow stresses and lower bending stresses at nearby anchors, while softer springs can have the opposite effects. Backfill is not elastic; testing has shown that soil is stiffest for very small pipe movements, but becomes less stiff as the pipe movements increase. References 61, 63, and 66 discuss soil stiffness and recommend procedures for estimating values for k which are consistent with the type of soil and the amount of pipe movement expected. The analyst should consult the project geotechnical engineer for assistance in resolving any uncertainties in establishing soil parameters, such as the modulus of subgrade reaction k, confining pressure p_c, and coefficient of friction μ.

Pipe with Expansion Joints. An expansion joint must be considered as a relatively free end in calculating stresses on buried elbows and loads on anchors. Since incorporation of expansion joints or flexible couplings introduces a structural discontinuity in the pipe, the effects of the unbalanced pressure load and the axial joint friction or stiffness must be superimposed on the thermal expansion effects in order to determine the maximum pipe stresses and anchor loads.

Pipe Stresses at Building Penetrations. Stresses at building penetrations can be calculated easily after the reactions due to thermal expansion in the buried piping have been determined. If the penetration is an anchor, then the stress due to the axial force $F_{\max}$ and the lateral bending moment M can be found by

$$S_E = F_{\max}/A + M/Z \text{ psi} \tag{B4.84}$$

If the penetration is not an anchor, but is instead a simple support with a flexible water seal, it is necessary to determine the stiffness affects of the water seal material in order to calculate the stress in the pipe at the penetration. Differential movement due to building or trench settlement can generate high theoretical stresses at piping penetrations to buildings. Calculation of such stresses is beyond the scope of this section.

Allowable Stress in Buried Pipe

Buried piping under axial stress can theoretically fail in one of two ways: either by column buckling (pipe pops out of the ground at midspan) or local failure by crippling or tensile failure (much more serious than column buckling). Since buried piping stresses are secondary in nature, and since the piping is continuously supported and restrained (see Fig. B4.31), higher total stresses may be permitted

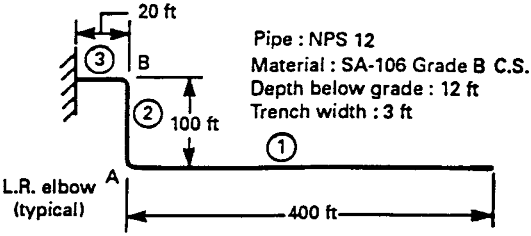

FIGURE B4.31 Plan of example buried pipe.

as follows:

$$S_C \leq S_A + S_h \tag{B4.85}$$

where S_A and S_h are as defined in Para. 102.3.2 of B31.1 Code.

REFERENCES

1. ASME, ''Criteria of the ASME Boiler and Pressure Vessel Code for Design by Analysis in Section III and VIII, Division 2,'' 1969.
2. Markl, A.R.C., ''Fatigue Tests of Piping Components,'' *Trans. ASME*, 1952.
3. ASME Boiler and Pressure Vessel Code, Section III, Division 1, 1998 edition.
4. *Bonney Forge Bulletin No. 789*, ''Weldolet, Stress Intensification Factors.''
5. *Bonney Forge Bulletin No. 775*, ''Sweepolet, Stress Intensification Factors and Stress Indices.''
6. *Bonney Forge Bulletin No. 785*, ''Latrolet, Stress Intensification Factors.'' Weldolet, Sweepolet, and Latrolet are registered trademarks of Bonney Forge Corp., Allentown, PA.
7. Walsh, D.J., and Woods, G.E., ''Determination of Stress Intensification Factors for Integrally Reinforced 45° Latrolet Branch Connections,'' ASME paper 79-PVP-98, 1979.
8. ASME B31.1, Power Piping Code, 1998 edition.
9. ASME B31.3, Process Piping Code, 1996 edition.
10. ASME B31.4, Liquid Transportation Systems for Hydrocarbons, Liquid Petroleum Gas, Anhydrous Ammonia, and Alcohols, 1992 edition.
11. ASME/ANSI B31.5, Refrigeration Piping Code, 1987 edition, including ASME/ANSI B31.5a–1989 addenda.
12. ASME B31.8, Gas Transmission and Distribution Piping Systems, 1995 edition.
13. Basavaraju, C., Lee, R.L., and Kalavar, S.R., ''Stress Intensification Factor for Y-Connections,'' PVP Vol. 235, ASME 1992, pp. 39–43.
14. Addendum No. 1 to Bonney Forge Brochure SI-1, 1988.
15. Accuracy of Stress Intensification Factors for Branch Connections, Welding Research Council Bulletin #329, 1987.
16. Stress Intensification Factors, Bonney Forge Bulletin #SI-1.
17. ASME Code for Pressure Piping, ASME B31.1, 1995.
18. Avent, R.R., Sadd, M.H., and Rodabaugh, E.C. ''Finite Element Analysis of Eccentric Reducers and Comparisons with Concentric Reducers.'' Welding Research Council Bulletin #285, 1983.
19. Roark, R.J., and Young, W.C., *Formulas for Stress and Strain*, 5th ed., McGraw-Hill, New York, Tables 30 (p. 463) and 33 (pp. 516 and 517), 1975.
20. Bijlaard, P.P., ''Stresses from Local Loadings in Cylindrical Pressure Vessels,'' *ASME Transactions*, vol. 77, no. 6, August 1955.
21. Wichman, K.R., Hopper, A.G., and Mershon, J.L., ''Local Stresses in Spherical and Cylindrical Shells Due to External Loadings,'' *Welding Research Council Bulletin 107*, March 1979 revision of August 1965 edition.
22. Rodabaugh, E.C., Dodge, W.G., and Moore, S.E., ''Stress Indices at Lug Supports on Piping Systems,'' and Dodge, W.G., ''Secondary Stress Indices for Integral Structural Attachments to Straight Pipe,'' *Welding Research Council Bulletin 198*, September 1974.
23. ASME Boiler and Pressure Vessel Code, Code Cases, Nuclear Components, Case N-122-1, 1989; Case N-318-4, 1989; Case N-391-1, 1989; and Case N-392-1, 1989.

24. Basavaraju, C., Kalavar, S.R., and Chern, C.Y., ‘‘Local Stresses in Piping at Integral Welded Attachments by Finite Element Method,’’ PVP Vol. 235, ASME, 1992, pp. 27–37.
25. Standard of the Expansion Joint Manufacturers Association, 1980.
26. Kreith, F., *Principles of Heat Transfer*, 2nd ed., International Text Book, Scranton, PA, 1966.
27. 10CFR Part 50, Appendix A, General Design Criterion 2, ‘‘Design Bases for Protection Against Natural Phenomena.’’
28. U.S. Nuclear Regulatory Commission, Regulatory Guide 1.29, ‘‘Seismic Design Classification,’’ rev. 3, September 1978.
29. Newmark, N.M., ‘‘A Method of Computation for Structural Dynamics,’’ *Journal of Engineering Mechanics Division*, vol. 85, no. EM3, ASCE, July 1959.
30. Bathe, K.J., and Wilson, E.L., ‘‘Stability and Accuracy Analysis of Direct Integration Methods,’’ *Earthquake Engineering and Structural Dynamics*, vol. 1, 1973.
31. Wu, R.W., Hussain, F.A., and Liu, L.K., ‘‘Seismic Response Analysis of Structural System Subject to Multiple Support Excitation,’’ *Nuclear Engineering and Design*, vol. 47, 1978.
32. Lin, C.W., and Loceff, F., ‘‘A New Approach to Compute System Response with Multiple Support Response Spectra Input,’’ *Nuclear Engineering and Design*, vol. 60, 1980.
33. ANSI A58.1, ‘‘Minimum Design Loads for Buildings and Other Structures,’’ ASCE 7–88, 1982.
34. U.S. Nuclear Regulatory Commission, Regulatory Guide 1.61, ‘‘Damping Values for Seismic Design of Nuclear Power Plants,’’ October 1973.
35. ASME Boiler and Pressure Vessel Code, Case N-411-I, February 20, 1986, reaffirmed on February 20, 1989.
36. *Welding Research Council, Bulletin 300*, ‘‘Technical Position on Damping Values for Piping—Interim Summary Report,’’ December 1984.
37. U.S. Nuclear Regulatory Commission, Regulatory Guide 1.84, ‘‘Design and Fabrication Acceptability, ASME Section III, Division 1,’’ rev. 26, July 1989.
38. Lin, C.W., ‘‘How to Lump the Masses—A Guide to the Piping Seismic Analysis,’’ ASME paper 74-NE-7, June 1974.
39. U.S. Nuclear Regulatory Commission, ‘‘Report of the U.S. Nuclear Commission Piping Review Committee—Evaluation of Dynamic Loads and Load Combinations,’’ *NUREG-1061,* vol. 4, December 1984.
40. Dong, M.Y., and Lee, H.M., ‘‘Comparative Study of ZPA Effect in Modal Response Spectrum Analysis,’’ ASME Publication PVP, vol. 144, June 1988.
41. U.S. Nuclear Regulatory Commission, Regulatory Guide 1.92, ‘‘Combining Modal Responses and Spatial Components in Seismic Response Analysis,’’ rev. 1, February 1976.
42. Singh, A.K., Chu, S.L., and Singh S., ‘‘Influence of Closely Spaced Modes in Response Spectrum Method of Analysis,’’ in *Proceedings of the Specialty Conference on Structural Design of Nuclear Power Plant Facilities*, vol. 2, ASCE, December 1973.
43. Biggs, J.M., *Introduction to Structural Dynamics*, McGraw-Hill, New York, 1964.
44. Coccio, C.L., ‘‘Steam Hammer in Turbine Piping Systems,’’ ASME 66-WA-FE32, 1966.
45. U.S. Nuclear Regulatory Commission, Report NUREG-0582, ‘‘Water-Hammer in Nuclear Power Plants,’’ July 1979.
46. Moore, K.V., and Rettig, W.H., ‘‘RELAP 4—A Computer Program for Transient Thermal-Hydraulic Analysis,’’ ANCR-1127, rev. 1, March 1975.
47. U.S. Atomic Energy Commission, Regulatory Standard Review Plan 3.9.2, ‘‘Dynamic Testing and Analysis of Systems, Components, and Equipments,’’ November 1974.
48. Patel, M.R., ‘‘Auxiliary Line Evaluation for Loss-of-Coolant Accident Using Time-History Plastic Analysis,’’ ASME Publication PVP-PB-022.

49. Sun, W., Lee, R., and Lee, N., ''Secondary System Piping Analysis including Seismic and a Loss-of-Coolant Accident,'' ASME Publication 83 PVP, vol. 73.
50. Kassawara, R.P., Austin, S.C., and Izor, R.C., ''The Effect of Reactor Coolant System Rupture Motion on Tributory Piping and Attached Equipment,'' ASME 80-C2/PVP-24.
51. U.S. Nuclear Regulatory Commission, Standard Review Plan 3.6.1, ''Plant Design for Protection against Postulated Piping Failure in Fluid Systems Outside Containment,'' rev. 1, July 1981.
52. U.S. Nuclear Regulatory Commission, Standard Review Plan 3.6.2, ''Determination of Rupture Locations and Dynamic Effects Associated with the Postulated Rupture of Piping,'' rev. 2, June 1987.
53. Sun, W., and Lee, R., ''Pipe Break Isolation Restraint Design for Nuclear Power Plant Containment Penetration Areas,'' ASME paper 82-PVP-37.
54. DeSalvo, G.J., and Gorman R.W., *ANSYS, Engineering Analysis System, User's Manual*, Swanson Analysis Systems, 1989.
55. *PIPERUP: A Computer Program for Pipe Whip Analysis, User's Manual*, Nuclear Service Corp., 1977.
56. ANSI/ANS 58.2-88, ''Design Basis for Protection of Light Water Nuclear Power Plants against Effects of Postulated Pipe Rupture,'' 1988.
57. Task Committee on Wind Forces, Committee on Loads and Stresses, Structural Division, ASCE, ''Wind Forces on Structures,'' *Transactions*, paper no. 3269, vol. 126, part II, 1961.
58. Table NF-3611-1, Subsection NF, Section III, Division 1, ASME Boiler and Pressure Vessel Code, 1989 edition.
59. Table 121.5, ASME B31.1—1998 edition. Support spacing is based on bending stress not exceeding 2300 psi.
60. Stevenson, J.D., and LaPay, W.S., ''Amplification Factors to be Used in Simplified Seismic Dynamic Analysis of Piping Systems,'' ASME paper 74-NE-9, Pressure Vessel and Piping Conference, June 1974.
61. Trautmann, C.H., and O'Rourke, T.D., ''Lateral Force-Displacement Response of Buried Pipes,'' *Journal of Geotechnical Engineering, ASCE,* Vol. 111, No. 9, September 1985, pp. 1077–1092.
62. Hetenyi, K.J., *Beams on Elastic Foundation*, The University of Michigan Press, Ann Arbor, Michigan, 1967.
63. Nyman, D.J., et al, *Guidelines for the Seismic Design of Oil and Gas Piping Systems.* Committee on Gas and Liquid Fuel Lifelines of the ASCE Technical Council on Lifeline Earthquake Engineering, 1984.
64. Young, O.C., and Trott, J.J., *Buried Rigid Pipes*, Elsevier Applied Science Publishers, 1984.
65. Moser, A.P., *Buried Pipe Design*, McGraw-Hill, 1990.
66. Audibert, J.M.E., and Nyman, K.J., ''Soil Restraint Against Horizontal Motion of Pipes,'' *Journal of the Geotechnical Engineering Division, ASCE,* Vol. 103, No. GT10, October 1977, pp. 1119–1142.
67. Leonards, G.A., Editor, *Foundation Engineering*, McGraw-Hill, New York, 1962.
68. Goodling, E.C., ''Buried Piping—An Analysis Procedure Update,'' ASME Publication PVP—Vol. 77, pp. 225–237, ASME Pressure Vessels and Piping Conference, Portland, June 1983.

CHAPTER B5
PIPING SUPPORTS

L. Di Giacomo, Jr.
Senior Engineer, Bechtel Power Corporation, Frederick, MD

J. R. Stinson
Supervisor, Engineering, LISEGA Inc., Newport, TN

INTRODUCTION

The correct and economical selection of the supports for any piping system usually presents difficulties of varying degrees, some relatively minor and others of a more critical nature. Proper support selection should be the objective of all phases of design and construction.

Many pipe support problems may be minimized or avoided if proper attention is given to the means of support during the piping layout design phase. The piping designer's familiarity with support problems, accepted practices, and commercially available pipe support components and their applications is extremely important. Good pipe support design begins with good piping design and layout. For example, other considerations being equal, piping should be routed to use the surrounding structure to provide logical and convenient points of support, anchorage, guidance, or restraint, with space available at such points for use of the proper component. Parallel lines, both vertical and horizontal, should be spaced sufficiently apart to allow room for independent pipe attachments for each line.

Pipe support specifications for individual projects must be written in such a way as to ensure proper support under all operating and environmental conditions and to provide for slope, expansion, anchorage, and insulation protection. Familiarity with standard practices, customs of the trade, and types and functions of commercial component standard supports and an understanding of their individual advantages and limitations, together with knowledge of existing standards, can be of great help in achieving the desired results.

Reference Codes and Standards

In the United States the pipe support standards and their publishers are

- MSS SP-58, *Materials and Design of Pipe Supports*
- MSS SP-69, *Selection and Application of Pipe Supports*

- MSS SP-89, *Fabrication and Installation of Pipe Supports*
- PFI ES-26, *Welded Load Bearing Attachments to Pressure Retaining Boundaries*
- WRC Bulletin 198
- National Fire Protection Association (NFPA)
- American Welding Society (AWS)
- American Institute of Steel Construction (AISC)

In Britain the pipe support standards are

- BS 3974, *Specification for Pipe Supports, Parts 1, 2, and 3*
- BS 5135, *Process of Arc Welding of Carbon and Carbon Manganese Steels*

In Germany the pipe support standards are

- VGB-R510L
- DIN EN 288, *Specification and Approval of Procedures for Welding Metallic Materials*

In Japan it is *Meeting Notification 501.*

Piping systems must comply with the code(s) of jurisdiction.

Unless complete design details are provided by the engineer or piping system layout designer, the final responsibility for selection and design of pipe supports capable of completely satisfying the system requirements and job specifications rests with the pipe support engineer and/or designer. Any piping system is inoperable until the pipe hangers and supports have been selected and installed. Experience shows that a high percentage of pipe support problems cannot be recognized during a cursory examination of the piping drawings but await a detailed analysis by those responsible for the design of the support and the preparation of specific material lists and details. In the interest of properly coordinating support installations with the piping erection schedule, priority should be given to the selection, design, and procurement of pipe support components.

The dollar value of the support system is generally outweighed many times by the value of pipe, valves, and fittings which are to be supported. Failure to allow sufficient time for the design, procurement, and fabrication of the supports can lead to costly erection delays and the use of temporary supports.

Pipe supports are generally identified by a specification type number, such as a type 3 double-bolt pipe clamp, as in MSS SP-58, or by a manufacturer's part number, a descriptive name, and size. The latter depends upon the type of component; e.g., pipe attachments, such as clamps, are prescribed by pipe size, upper attachments are identified by rod size, and variable springs are sized by the calculated load to be supported. In addition, pipe support components vary in their load-carrying capacity. The load capacity of each type of pipe support component is given in most manufacturers' catalogs, load capacity data sheets, or design report summaries. Various components and their functions will be discussed in greater detail in subsequent sections.

General Design Considerations

Hangers and supports must be designed to meet all static as well as dynamic operational conditions to which the piping and equipment may be subjected. The support system must provide for and control, subject to the requirements of the piping configuration, the movement due to the thermal expansion and contraction of the piping and connected equipment. Proper design necessitates a thorough knowledge of the complete cyclical behavior of each section of piping to be supported as well as an awareness of the proximity of the pipe with respect to building structure, other piping systems, and equipment in the immediate vicinity.

A substantial reduction in the complexity of support design can be realized when piping support requirements are coordinated properly with the plant and piping design phases. Initial plant design should recognize that the support designer requires access to the piping, sufficient space in which to install the supporting equipment, and adequate structure from which to support the piping. Ideally the support designer should have the opportunity to offer comments on the piping design from the initial layout.

Starting with any given set of piping and structural drawings, it is necessary for the support designer to become familiar with the overall design concept and any special requirements that may be called for in the specifications.

- When one is dealing with a number of piping systems in an area, it is advisable to superimpose the piping (using a single-line representation) on the structural drawings.
- A preliminary study very often reveals that consideration has been given to the supporting phase and provisions have been made in the form of steel work patterns, anchor bolts or inserts in concrete, or runs of piping purposely routed near suitable supporting structure. Naturally, full advantage should be taken of such conditions.
- The piping should also be studied from the standpoint of possibly coordinating supports for one system or pipe run with those of another, thereby providing an orderly supporting arrangement. On the other hand, it may also be necessary, because of loading conditions, to purposely stagger supports in order to distribute the loads on the supporting structures.

All the above should be determined prior to the start of detailed support design for any piping system.

Once a tentative overall pattern of supports for a particular area has been established, it is advisable to begin specific design with the most critical or largest piping systems, thereby reserving the best possible supporting conditions for the most critical lines.

Location of Supports

Of prime consideration in design is the determination of support location. Although supports are located ideally to suit the requirements of the piping configuration, some degree of compromise may be required to take the fullest advantage of the available supporting structure. First the piping system should be investigated as a whole. With the use of the allowable support spacing as dictated by code, practice, or special calculation (see Chap. B4), the support points are tentatively located, taking into consideration division of straight runs, concentrated loads, elimination of excessive overhanging sections or bends, and loads on terminal connections.

Next, the tentative locations are compared with the available supporting structure, modified as required, and recorded on the superimposed piping previously sketched on the structural drawings. The recording of each support location, along with an indication of any supplementary steel required, serves as a valuable aid in checking clearances and coordinating supports during the course of design, especially when a number of designers are working on the same project.

It should be emphasized that the location of pipe supports is an iterative process in which several support configurations are investigated in succession, with the results of the analysis of one configuration being factored into the selection of the next configuration, until a satisfactory solution is reached.

Loading Considerations

Once a satisfactory pattern of support locations has been established, the next step is to determine the loading and movement conditions existing at each support point. Here, coverage will be confined to the general considerations regarding only loads and movements. Recommended methods for obtaining or calculating specific loads and movements are covered later under ‘‘Determination of Loads and Movements.’’

The magnitude and direction of the design load as determined by the methods of Chap. B4 are used to select and design the proper support or restraint at each selected point along the piping system.

Seismic, Dynamic, or Other Loadings

The design of pipe support components and structural steel must include provisions for seismic, dynamic, or other occasional loadings where required. Applicable codes generally permit some increase in allowable stresses for seismic and dynamic loading conditions. Spring supports should be evaluated to determine if additional dynamic movement can be tolerated; if not, additional means such as limit stops or dynamic snubbers may be required.

Overloading from Various Causes

ASME B31.1, *Power Piping Code,* allows an increase in the allowable stress values of 20 percent for short-time overloading during operation. However, it is appropriate to point out that where there is a possibility of two or more causes of short-time overloading (e.g., ice, wind, seismic shock, or vibration) occurring simultaneously, the combined overloading in excess of 20 percent must be added to the design load.

DETERMINATION OF SUPPORT LOCATIONS

Support locations are dependent on many considerations, such as pipe size, piping configuration, the location of heavy valves and fittings, and the structure that is available for support. No firm rules or limits exist which will positively fix the location of each support in a piping system. Instead, the engineer must exercise judgment to determine appropriate support locations.

TABLE B5.1 Suggested Piping Support Spacing

	Suggested maximum span, ft (m)	
NPS (DN)	Water service	Steam, gas, or air service
1 (25)	7 (2.13)	9 (2.74)
2 (50)	10 (3.05)	13 (3.96)
3 (80)	12 (3.66)	15 (4.57)
4 (100)	14 (4.27)	17 (5.18)
6 (150)	17 (5.18)	21 (6.40)
8 (200)	19 (5.79)	24 (7.32)
12 (300)	23 (7.01)	30 (9.14)
16 (400)	27 (8.23)	35 (10.7)
20 (500)	30 (9.14)	39 (11.9)
24 (600)	32 (9.75)	42 (12.8)

Pipe Support Spacing

The suggested maximum spans between supports listed in Table B5.1 reflect the practical considerations involved in determining support spacings on straight runs of standard wall piping. The spans are based on a combined bending and shear stress of 1500 psi (10.35 MPa) when the pipe is filled with water, and 1⁄10- in (2.54-

TABLE B5.2 Gravity Steel Pipe Support Spacing (Contents = Water)

			Pipe span, ft-in (m)			
Nominal pipe size, NPS	(DN)	Pipe sch.	No insul.	1-in (25 mm) insul.	1½-in (40 mm) insul.	2-in (50 mm) insul.
½	(15)	40	6-8 (2.03)	5-4 (1.63)	4-6 (1.37)	3-11 (1.19)
		80	6-7 (2.01)	5-5 (1.65)	4-7 (1.40)	4-0 (1.22)
		160	6-4 (1.93)	5-5 (1.65)	4-9 (1.45)	4-2 (1.27)
¾	(20)	40	7-5 (2.26)	6-3 (1.91)	5-6 (1.68)	4-10 (1.47)
		80	7-5 (2.26)	6-4 (1.93)	5-8 (1.73)	5-1 (1.55)
		160	7-3 (2.21)	6-4 (1.93)	5-9 (1.75)	5-2 (1.57)
1	(25)	40	8-3 (2.51)	7-0 (2.13)	6-4 (1.93)	5-9 (1.75)
		80	8-3 (2.51)	7-3 (2.21)	6-8 (2.03)	6-1 (1.85)
		160	8-1 (2.46)	7-3 (2.21)	6-9 (2.06)	6-2 (1.88)
1¼	(32)	40	8-3 (2.51)	7-0 (2.13)	6-4 (1.93)	5-9 (1.75)
		80	8-3 (2.51)	7-3 (2.21)	6-8 (2.03)	6-1 (1.85)
		160	8-1 (2.46)	7-3 (2.21)	6-9 (2.06)	6-2 (1.88)
1½	(40)	40	9-10 (3.00)	8-9 (2.67)	8-1 (2.46)	7-3 (2.21)
		80	9-10 (3.00)	9-1 (2.77)	8-6 (2.59)	7-7 (2.31)
		160	9-11 (3.02)	9-2 (2.79)	8-8 (2.64)	7-11 (2.41)
2	(50)	40	10-9 (3.28)	9-10 (3.00)	9-3 (2.82)	8-7 (2.62)
		80	11-1 (3.38)	10-2 (3.10)	9-9 (2.97)	9-2 (2.79)
		160	11-1 (3.38)	10-5 (3.18)	10-0 (3.05)	9-6 (2.90)

mm) sag is allowed between supports. Table spans do not apply where concentrated weights such as valves or heavy fittings exist, or where changes in direction of the piping system occur between support points.

Supports should be placed as close as possible to concentrated loads in order to keep piping stresses to a minimum. Where changes in piping direction occur between supports, it is good practice to keep the total length of pipe between the supports equal to or less than 0.75 times the full spans listed in Table B5.1. When practical, a support should be located immediately adjacent to any change in direction of the piping.

For economy in the support of low-pressure, low-temperature systems, support spans may be based on the code-allowable total stresses of the pipe and the amount of allowable deflection between supports.

In steam lines with long spans, the deflection caused by piping weight may be large enough to cause an accumulation of condensate at the low points. During plant start-up, these pockets of condensate can cause flashing and can result in undesirable dynamic loads on the system. Natural drainage can be provided by erecting the line with a slope in such a manner that succeeding supports are lower than the points of maximum deflection in preceding spans.

For fluids other than water, the bending stress can be found by using the formulas in Chap. B4. Spans for typical small-diameter piping based on the equations in Chap. B4 are found in Tables B5.2 and B5.3.

TABLE B5.3 Gravity Steel Pipe Support Spacing (Pipe Empty, Air, Steam)

			Pipe span, ft-in (m)			
NPS	(DN)	Pipe sch.	No insul.	1-in (25 mm) insul.	1½-in (40 mm) insul.	2-in (50 mm) insul.
½	(15)	40	7-1 (2.16)	5-6 (1.68)	4-7 (1.40)	4-1 (1.24)
		80	6-10 (2.08)	5-6 (1.68)	4-9 (1.45)	4-2 (1.27)
		160	6-7 (2.01)	5-6 (1.68)	4-9 (1.45)	4-3 (1.30)
¾	(20)	40	8-1 (2.46)	6-8 (2.03)	5-9 (1.75)	5-0 (1.52)
		80	7-10 (2.39)	6-8 (2.03)	5-10 (1.78)	5-2 (1.57)
		160	7-5 (2.26)	6-7 (2.01)	5-10 (1.78)	5-4 (1.63)
1	(25)	40	9-2 (2.79)	7-6 (2.29)	6-9 (2.06)	6-0 (1.83)
		80	8-10 (2.69)	7-7 (2.31)	6-11 (2.11)	6-3 (1.91)
		160	8-6 (2.59)	7-5 (2.26)	6-11 (2.11)	6-4 (1.93)
1¼	(32)	40	9-2 (2.79)	7-6 (2.29)	6-9 (2.06)	6-0 (1.83)
		80	8-10 (2.69)	7-7 (2.31)	6-11 (2.11)	6-3 (1.91)
		160	8-6 (2.59)	7-5 (2.26)	6-11 (2.11)	6-4 (1.93)
1½	(40)	40	11-3 (3.43)	9-9 (2.97)	8-11 (2.72)	7-8 (2.34)
		80	11-0 (3.35)	9-10 (3.00)	9-2 (2.79)	8-1 (2.46)
		160	10-6 (3.20)	9-7 (2.92)	9-2 (2.79)	8-3 (2.51)
2	(50)	40	12-8 (3.86)	11-2 (3.40)	10-4 (3.15)	9-6 (2.90)
		80	12-5 (3.78)	11-3 (3.43)	10-7 (3.23)	9-11 (3.02)
		160	11-10 (3.61)	11-0 (3.35)	10-6 (3.20)	10-0 (3.05)

DETERMINATION OF LOADS AND MOVEMENTS

The anticipated movement at each support point dictates the basic type of support required. Each type of support selected must be capable of accommodating movements obtained by one of the methods outlined later in this section. It is a good practice to select first the most simple or basic rigid support type and to add to the complexity only as conditions warrant. No advantage will be realized in upgrading a support when a simpler, more economical type can be shown to satisfy all the design requirements. Both vertical and horizontal movement must be evaluated.

When piping vertical movement is small, the use of simple rod hangers should be adequate. With small vertical movement and significant horizontal movement, the simple rod hanger will still suffice, provided the overall length is sufficient to keep the angular swing of the rod within reasonable limits—normally accepted as being 4° from the vertical. When one is calculating the total movement experienced by the support, both horizontal displacements and the vertical displacement must be combined and normalized to the axis of the support. Consideration should be given to relocating the upper connection some percentage (usually two-thirds) of the total movement as a means for reducing the angularity in the hot position. For piping supported from below, some form of slide must be incorporated to provide for the horizontal movement; or, in the case of ensured longitudinal movement, a pipe roll may be used. Rollers are usually only used on long runs of piping supported on racks such as found in refinery piping. Suspended hangers with considerable horizontal movement and low headroom will require either single- or double-direction trolleys or rollers. Where both longitudinal and lateral movements are large, consideration may be given to the use of a single-direction trolley oriented on the resultant movement vector.

Use of Variable Spring and Constant Spring Supports

Piping which is subject to significant vertical movement requires the incorporation of variable springs or constant support springs. Variable supports will normally suffice for spring hangers except for certain systems in power plants, refineries, and some specialized lines in process and chemical plants which may have large vertical movements where the change in load between installed and operating is unacceptable. (In these cases, the use of constant supports is required.) As the name *variable support* implies, the supporting effect varies in relation to the vertical movement of the suspended piping and the resultant compression or extension of the spring coil. The change in supporting force is in proportion to the spring rate and to the amount of movement. When variable supports are used, the loss or gain in supporting force should be considered with respect to added stress on the piping system. For normal installations, various industries have established conventions concerning the use of variable spring supports and constant spring supports which may be regarded as standard practice. For example, the following would be conventional guidelines for power plant piping:

At support locations subject to vertical movement, springs of suitable design to prevent excessive variation in supporting effect should be used to provide for the movement. The amount of variation that can be tolerated should be based on such considerations as pipe-bending effect, control of piping elevation, and allowable terminal connection loadings. In general, the deviation in supporting effect should be limited to ±6 percent for systems such as main steam, hot and cold reheat, extraction lines over 750°F (400°C), discharge in the vicinity of the pumps, and boiler terminal connection. On other systems, the variations in supporting effect should be limited to 25 percent.

For all systems, a greater allowance in percentage variation is permissible at points of support where the variation in supporting effect is transferred directly to a rigid support or terminal connection specifically designed for the resulting loading condition.

When the load and movement at each selected support location are determined, detailed design of the individual supports can be undertaken. The movement determines the basic type of support (such as spring or rigid, slide or roller); the piping, its temperature, and ambient temperature determine the pipe attachment and remaining support material, respectively; the proximity to supporting structure and available clearance determines the support configuration such as single- or double-rod hanger, stanchion, or bracket-type support; and the load determines the required size for each component of the support.

The design should take full advantage of commercially available load-rated and tested support components to the greatest extent possible. An effort should be made to maintain uniformity and simplicity in design. The support should be functional, provide means for piping elevation adjustment, and be easily installed using normal field labor and equipment.

For economic reasons, the use of commercial catalog items available from piping support manufacturers eliminates the need for detail design of the numerous types and varying sizes of components required to complete a typical piping support installation.

MSS SP-58 Hanger and Support Types

Refer to Fig. B5.1.

Type 1	*Adjustable steel clevis hanger* A pipe attachment for suspension of horizontal stationary lines and providing a means for vertical adjustment.
Type 2	*Yoke-type pipe clamp* A pipe attachment for suspension of horizontal stationary insulated lines. This type of clamp is also made to accommodate pipe of nonstandard size when designed with a filler plate.
Type 3	*Carbon- or alloy-steel three-bolt pipe clamp* A pipe attachment for suspension of horizontal stationary lines.
Type 4	*Steel pipe clamp* A pipe attachment for suspension of horizontal stationary insulated lines.
Type 5	*Pipe hanger* A pipe attachment for suspension of horizontal stationary lines either using a hanger rod or bolting to wall from the T slot provided in the side of the strap.
Type 6	*Adjustable swivel pipe, split ring type or solid ring type* A pipe attachment for suspension of horizontal stationary lines.
Type 7	*Adjustable steel band hanger* A pipe attachment for suspension of horizontal stationary lines and providing a means for vertical adjustment.

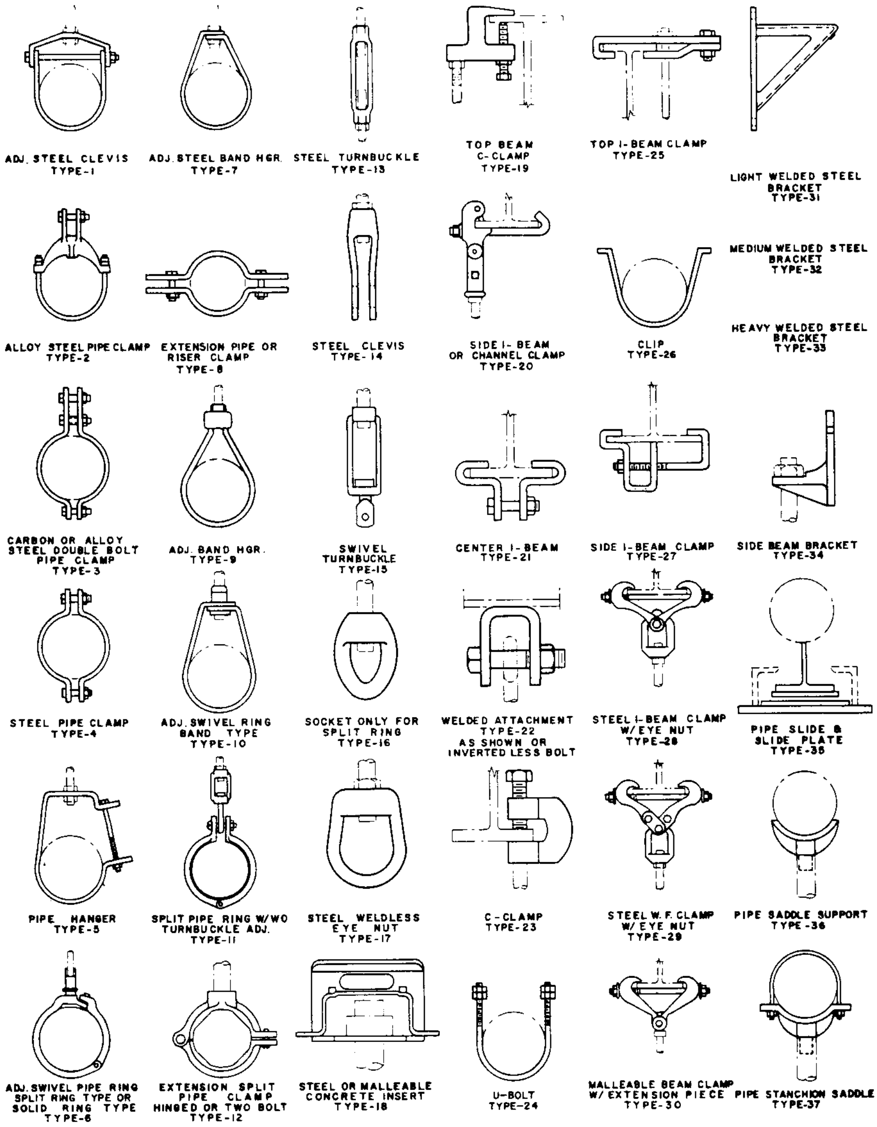
ADJ. STEEL CLEVIS TYPE-1
ADJ. STEEL BAND HGR. TYPE-7
STEEL TURNBUCKLE TYPE-13
TOP BEAM C-CLAMP TYPE-19
TOP I-BEAM CLAMP TYPE-25
LIGHT WELDED STEEL BRACKET TYPE-31
MEDIUM WELDED STEEL BRACKET TYPE-32
HEAVY WELDED STEEL BRACKET TYPE-33
ALLOY STEEL PIPE CLAMP TYPE-2
EXTENSION PIPE OR RISER CLAMP TYPE-8
STEEL CLEVIS TYPE-14
SIDE I-BEAM OR CHANNEL CLAMP TYPE-20
CLIP TYPE-26
CARBON OR ALLOY STEEL DOUBLE BOLT PIPE CLAMP TYPE-3
ADJ. BAND HGR. TYPE-9
SWIVEL TURNBUCKLE TYPE-15
CENTER I-BEAM TYPE-21
SIDE I-BEAM CLAMP TYPE-27
SIDE BEAM BRACKET TYPE-34
STEEL PIPE CLAMP TYPE-4
ADJ. SWIVEL RING BAND TYPE TYPE-10
SOCKET ONLY FOR SPLIT RING TYPE-16
WELDED ATTACHMENT TYPE-22 AS SHOWN OR INVERTED LESS BOLT
STEEL I-BEAM CLAMP W/EYE NUT TYPE-28
PIPE SLIDE & SLIDE PLATE TYPE-35
PIPE HANGER TYPE-5
SPLIT PIPE RING W/WO TURNBUCKLE ADJ. TYPE-11
STEEL WELDLESS EYE NUT TYPE-17
C-CLAMP TYPE-23
STEEL W.F. CLAMP W/EYE NUT TYPE-29
PIPE SADDLE SUPPORT TYPE-36
ADJ. SWIVEL PIPE RING SPLIT RING TYPE OR SOLID RING TYPE TYPE-6
EXTENSION SPLIT PIPE CLAMP HINGED OR TWO BOLT TYPE-12
STEEL OR MALLEABLE CONCRETE INSERT TYPE-18
U-BOLT TYPE-24
MALLEABLE BEAM CLAMP W/ EXTENSION PIECE TYPE-30
PIPE STANCHION SADDLE TYPE-37

FIGURE B5.1 Type chart.

Types of pipe supports (MSS SP-58).

Type 8 *Extension pipe or riser clamp*
A pipe attachment for suspension of vertcal stationary lines without the use of hanger rods. The transfer of piping load is accomplished by resting the ears of the clamp on a bearing surface.

Type 9 *Adjustable band hanger*
A pipe attachment for suspension of horizontal stationary lines.

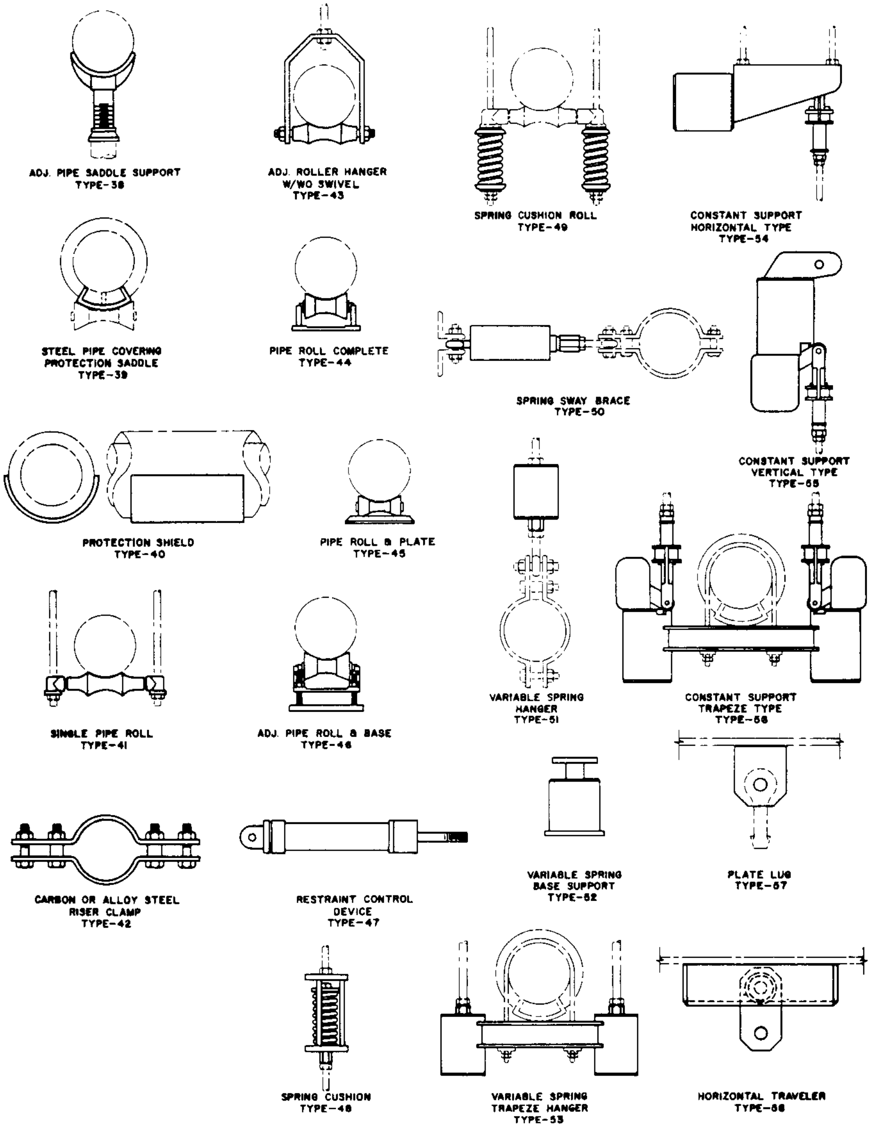
ADJ. PIPE SADDLE SUPPORT TYPE-38
ADJ. ROLLER HANGER W/WO SWIVEL TYPE-43
SPRING CUSHION ROLL TYPE-49
CONSTANT SUPPORT HORIZONTAL TYPE TYPE-54
STEEL PIPE COVERING PROTECTION SADDLE TYPE-39
PIPE ROLL COMPLETE TYPE-44
SPRING SWAY BRACE TYPE-50
CONSTANT SUPPORT VERTICAL TYPE TYPE-55
PROTECTION SHIELD TYPE-40
PIPE ROLL & PLATE TYPE-45
VARIABLE SPRING HANGER TYPE-51
CONSTANT SUPPORT TRAPEZE TYPE TYPE-56
SINGLE PIPE ROLL TYPE-41
ADJ. PIPE ROLL & BASE TYPE-46
VARIABLE SPRING BASE SUPPORT TYPE-52
PLATE LUG TYPE-57
CARBON OR ALLOY STEEL RISER CLAMP TYPE-42
RESTRAINT CONTROL DEVICE TYPE-47
SPRING CUSHION TYPE-48
VARIABLE SPRING TRAPEZE HANGER TYPE-53
HORIZONTAL TRAVELER TYPE-58

FIGURE B5.1 (*Continued*) Type chart.

Type 10	*Adjustable swivel ring, band type* A pipe attachment for suspension of horizontal stationary lines and providing a means for vertical adjustment.
Type 11	*Split pipe ring with or without turnbuckle adjustment* A pipe attachment for suspension of horizontal stationary lines permitting installation before or after pipe is in place.

Type 12	*Extension split pipe clamp, hinged or two-bolt* A pipe attachment for suspension of horizontal stationary lines used in conjunction with a pipe nipple.
Type 13	*Steel turnbuckle* A device with one left-hand internal threaded end and one right-hand internal threaded end, used to join two threaded rods and providing for vertical adjustment.
Type 14	*Steel clevis* A device which provides for the attachment of a threaded rod to a bolted or pinned connection.
Type 15	*Swivel turnbuckle* A device which provides flexibility at the pipe connection and a means of vertical adjustment.
Type 16	*Malleable iron socket* A device for attaching threaded rods to various types of building attachments.
Type 17	*Steel weldless eye nut* A forged-steel device which provides for the attachment of a threaded rod to a bolt or pin connection.
Type 18	*Steel or malleable concrete insert* A cast-in-place device which provides for a rod attachment capable of nominal lateral adjustment.
Type 19	*Top beam C-clamp* A device requiring no welding which attaches to the top flange of a structural shape where the vertical rod is required to be offset from the edge of the flange.
Type 20	*Side beam or channel clamp* A device requiring no welding which attaches to the bottom flange of a structural shape where the vertical rod is required to be at the edge of the flange.
Type 21	*Center beam* A device requiring no welding which attaches to the bottom flange of a structural shape where the vertical rod is required to be centered on the structural shape.
Type 22	*Welded beam attachment (as shown or inverted less bolt)* A structural attachment welded to the bottom of steel beams and used as a means for connecting hanger rods to the beams.
Type 23	*C-clamp* A device requiring no welding which attaches to a flange of a structural shape and provides for attaching a threaded rod.
Type 24	*U-bolt* A U-shaped rod with threaded ends used as a support or guide.
Type 25	*Top beam clamp* A device requiring no welding which attaches to the top flange of a structural shape where the vertical rod is required to be at the edge of the flange.
Type 26	*Pipe clip* A pipe attachment for suspension of horizontal stationary lines by

	bolting the clip directly to a structure. Also referred to as a pipe strap or strap.
Type 27	*Side beam clamp* A device requiring no welding which attaches to the bottom flange of a structural shape where the vertical rod is required to be offset from the center of the shape.
Type 28	*Steel beam clamp with eye nut* A device requiring no welding which attaches to the bottom flange of a structural shape where the vertical rod is required to be centered on the structural shape.
Type 29	*Linked steel clamp with eye nut* A device requiring no welding which attaches to the bottom flange of a structural shape where the vertical rod is required to be centered on the structural shape.
Type 30	*Malleable beam clamp with extension piece* A device requiring no welding which attaches to the bottom flange of a structural shape where the vertical rod is required to be centered on the structural shape.
Type 31	*Light welded steel bracket* A braced cantilever device intended for supporting a gravity load from rod-type hangers. This device is typically bolted to a wall and may be installed with the brace either above or below the horizontal member.
Type 32	*Medium welded steel bracket* A braced cantilever device intended for supporting maximum gravity loads and/or horizontal loads up to 1500 lb (6670 newton, N). Loads may be applied anywhere along the main member. This device is typically bolted to a wall and may be installed with the brace above, below, or on either side of the main member.
Type 33	*Heavy welded steel bracket* A braced cantilever device intended for supporting maximum gravity loads and/or horizontal loads up to 3000 lb (13,340 newton, N). Loads may be applied anywhere along the main member. This device is typically bolted to a wall and may be installed with the brace above, below, or on either side of the main member.
Type 34	*Side beam bracket* A device requiring no welding which attaches to the sides of steel or wooden members and provides a means for vertical adjustment.
Type 35	*Pipe slide and slide plate* A device for supporting piping having horizontal movements and where a low coefficient of friction is necessary.
Type 36	*Pipe saddle support* A device having a curved base for cradling horizontal pipe and which slips into a nominal diameter pipe stanchion.
Type 37	*Pipe stanchion saddle* A device having a curved base for cradling horizontal pipe and which slips into a nominal diameter pipe stanchion. The U-bolt yoke provides stability.

Type 38	*Adjustable pipe saddle support* A device having a curved base for cradling horizontal pipe and which threads into a nominal diameter pipe stanchion. This device provides vertical adjustment.
Type 39	*Steel pipe-covering protection saddle* A device used on insulated piping which is designed to minimize heat losses and prevent damage to insulation.
Type 40	*Protection saddle* A metal device intended to prevent crushing of insulation and/or breaching of the vapor barrier. It is typically used at support points.
Type 41	*Single pipe roll* A device used for supporting horizontal piping from two rods, allowing for vertical adjustment and consisting of a roller that allows for axial movement with virtually no frictional resistance.
Type 42	*Carbon- or alloy-steel riser clamp* A pipe attachment for supporting vertical piping through the use of shear lugs welded to the pipe. Load bolts are provided to transfer the pipe load to the rod hanger assembly.
Type 43	*Adjustable roller hanger with or without swivel* A device used for supporting horizontal piping from a single rod, allowing for vertical adjustment and consisting of a roller that allows for axial movement with virtually no frictional resistance.
Type 44	*Pipe roll complete* A device used for supporting horizontal piping where vertical adjustment is unnecessary and consisting of a roller that allows for axial movement with virtually no frictional resistance.
Type 45	*Pipe roll and plate* A device used to support horizontal piping, having minimal axial movement, from beneath and where no vertical adjustment is necessary.
Type 46	*Adjustable pipe roll and base* A device used to support horizontal piping, having axial movement, from beneath and where vertical adjustment is necessary.
Type 47	*Restraint control device* A rigid, mechanical, spring, or hydraulic device used for absorbing shock loading and/or controlling sway in piping systems.
Type 48	*Spring cushion* A noncalibrated, rod-type, single-coil spring support used where a cushioning effect is desired.
Type 49	*Spring cushion roll* A noncalibrated, rod-type, double-coil rod spring support used where a cushioning effect is desired along with a pipe roll.
Type 50	*Spring sway brace* A spring device used for absorbing shock loading and/or controlling sway in piping systems.
Type 51	*Variable spring hanger* A device having a single-spring coil which supports the gravity loads of piping systems that are subjected to vertical thermal movements. This device produces a varying load when the piping moves from the

	cold position to the hot position. This type of spring hanger supports the pipe from above.
Type 52	*Variable spring base support* A device having a single-spring coil which supports the gravity loads of piping systems that are subjected to vertical thermal movements. This device produces a varying load when the piping moves from the cold to the hot position. This type of spring hanger supports the pipe from below.
Type 53	*Variable spring trapeze hanger* A device having double-spring coils which support the gravity loads of piping systems that are subjected to vertical thermal movements. This device produces a varying load when the piping moves from the cold position to its hot position. This type of spring hanger supports the pipe from above with two rods.
Type 54	*Constant support hanger, horizontal type* A device having a single-spring coil working in conjunction with counterbalancing mechanisms to support the gravity loads of piping systems that are subjected to vertical thermal movements. This device produces a constant load when the piping moves from the cold position to the hot position. This type of constant hanger has the spring coil in the horizontal position and supports the pipe from above.
Type 55	*Constant support hanger, vertical type* A device having a single-spring coil working in conjunction with counterbalancing mechanisms to support the gravity loads of piping systems that are subjected to vertical thermal movements. This device produces a constant load when the piping moves from the cold position to the hot position. This type of constant hanger has the spring coil in the vertical position and supports the pipe from above.
Type 56	*Constant support hanger, trapeze type* A device having double-spring coils working in conjunction with counterbalancing mechanisms to support the gravity loads of piping systems that are subjected to vertical thermal movements. This device produces a constant load when the piping moves from the cold position to the hot position. This type of constant hanger has the spring coil in the vertical position and supports the pipe from below with two rods.
Type 57	*Plate lug* A structural attachment which provides a means of connecting rod-type hangers to structural steel members via a pin or bolt through the hole of the lug.
Type 58	*Horizontal traveler* A device which permits the structural attachment end of rod-type hangers to accommodate horizontal piping movements in conditions where offsetting of conventional structural attachments is not practical due to limited space.

SELECTION OF PIPE-SUPPORTING DEVICES

Piping Systems: Temperature Classification. Piping systems, for the purposes of this chapter, are divided into the following temperature categories, in order to provide a basis for the selection of supports, anchors, or restraints and guides.

1. *Hot systems*
   Hot systems operate above 120°F (49°C) and are grouped as follows:
   - ***a.*** The temperature range is from 120 to 450°F (49 to 232°C). Typical examples are low-pressure steam, hot water, and certain process piping.

   For Type 1a systems, MSS-SP-58 support Types 1 and 3 through 12 are used for suspending from above. Rollers, used for supporting from below, should be MSS-SP-58 Types 41, and 43 through 46 with appropriate saddles of MSS-SP-58 Type 39; and sliding supports should be of MSS-SP-58 Types 35 through 38.
   - ***b.*** The temperature range is from 450 to 650°F (232 to 343°C). Typical examples are boiler plant and industrial steam and hot-water piping systems.

   For Type 1b systems, MSS-SP-58 support Types 1, 3, 4, and 42 are used. Rollers should be of MSS-SP-58 Types 41 and 43 through 46, with appropriate saddles of MSS-SP-58 Type 39.
   - ***c.*** The temperature ranges from 750°F (400°C) upward. A typical example is a high-pressure steam power plant piping system.

   For Type 1c systems, alloy supports are used as required by the line temperature. Supports should be of MSS-SP-58 Type 2, 3, or 42 with saddles of MSS-SP-58 Type 39, and rollers of MSS-SP-58 Types 41 through 47. [In the temperature range 650°F (343°C) and higher, there is the possibility of metallurgical change if unalloyed carbon-steel components are used. It is suggested that those portions of hangers, anchors, and supports in direct contact with piping which operates at or above 650°F (343°C) be made of materials suitable for these extreme service temperatures.]
2. *Ambient systems*
   Ambient systems are systems in which the contents of the line are not heated or cooled by mechanical means. Temperatures range up to 120°F (49°C). Plant air and service water are typical systems.

   For Type 2 systems, hangers can be of MSS-SP-58 Types 1 and 3 through 12, with supports of MSS-SP-58 Types 24, 26, and 35 through 38.
3. *Cold systems*
   Cold systems typically operate below 70°F (21°C).
   - ***a.*** The temperatures range from 32 to 70°F (0 to 21°C). A typical example is chilled water piping. Refer to Chap. C9.
   - ***b.*** The temperature ranges from 32 to −20°F (0 to −29°C), as in brine systems. Refer to Chap. C9.
   - ***c.*** Temperatures below −20°F (−29°C), as in cryogenic systems. Refer to Chap. C8.

   For Type 3 systems, the hanger or support must be outside the insulation, and the vapor barrier must be left undisturbed. An MSS-SP-58 Type 40 insulation protection shield (or similar device) must be used to distribute the loading on the insulation. Supports sized for the outside diameter of the insulation can be of MSS-SP-58 Type 1, 4, 6, 7, 9, 10, or 11. For Type 3c systems, the welded attachment must be of an alloy material which is compatible with the material of the piping system itself.

Pipe Attachments. Supports for the various systems described above may be selected from Fig. B5.1.

Pipe-Covering Protection Saddles. Where insulation is used on the piping system, it is frequently necessary to make some modification at the point of attachment of the support. Since different methods and practices exist for hot lines as contrasted to low-temperature lines (chilled water and brine), they should be treated separately.

Caution must be exercised in the support of insulated piping to ensure that a firm attachment is provided. Particularly, with respect to high-temperate lines, provision in the form of pipe protection saddles is made to ensure that the pipe supports do not become overheated. Protection saddles, Type 39 for use with high-temperature insulation, should be 12 in (305 mm) long and have approximately 60° of arc. Metal is normally ⅛ in (3 mm) thick for pipe sizes up to 5 in (125 mm) and 3⁄16 in (5 mm) thick for larger pipe sizes. These saddles and matching rollers are available commercially for most sizes and insulation thicknesses. Refer to Chap. B7 for insulation thicknesses.

For support from above, either a conventional type of pipe clamp may be used directly on the pipe and the arms of the clamp (MSS-SP-58 Type 3) extended outside the insulation, or a larger clamp (MSS-SP-58 Type 1 or 4) may be used and lined with saddles or noncrushable insulation material.

Lugs may be welded to the pipe and extended outside the insulation to a steel clevis (MSS-SP-58 Type 14) or, if supported from below, to a sliding shoe or guided roller. The important point is to have the actual attachment or supporting member outside the insulation so that movement of the line will not result in insulation damage.

For low-temperature service, in addition to heat loss or gain, the problem of atmospheric condensation must be considered, and such lines are usually insulated with a material that has an outer covering or seal called a *vapor barrier*. This barrier prevents the insulation from absorbing moisture. For this reason it is not permissible to penetrate the insulation with load-carrying members such as the legs of a conventional high-temperature saddle or a pipe clamp. Since most low-temperature insulations have low compressive strength, it is necessary to provide shields to line the piping insulation and to spread out the bearing area sufficiently to prevent crushing of the insulation. Such shields should fit the outer diameter of the insulation and cover 180° of arc. Shield lengths and thicknesses are given in Table B5.4, taken from MSS-SP-69.

TABLE B5.4 Minimum Dimensions: Shields for Insulation Protection

NPS (DN)	Skill length, in (mm)	Thickness, in (mm)
½ to 3½ (15 to 90)	12 (300)	0.048 (1)
4 (100)	12 (300)	0.060 (2)
5 (125)	18 (450)	0.060 (2)
6 (150)	18 (450)	0.060 (2)
8 (200)	24 (600)	0.075 (2)

Attachments to Buildings or Other Structures. When piping is to be hung from steel, Types 20 through 23, 25, and Types 27 through 30 beam clamps and Type 57 plate lug should be used.

When piping is hung from concrete, malleable iron or steel inserts of Type 18 or a continuous strip insert may be used. Embedded anchor bolts may also be used under specific conditions. For wall supports on either concrete or steel brackets, Types 31 through 33 may be used.

In many cases, it is necessary to provide additional structure as a means of upper attachment. Such structure must be designed for the particular load and can be of structural angle, beam, or channel.

Structural steel for pipe supports must meet the allowable stress requirements of the AISC specification.

Multiple-Pipe Runs

Where the bottoms of the various lines are approximately at the same elevation, common supports are advantageous. The supports take the form of trapeze hangers fabricated from structural-steel shapes. Multiple-pipe runs are also supported on fabricated bents or frames. This is quite common for oil refinery or tunnel work where multiple runs of pipe are relatively near grade. Steel or concrete sleepers are used.

On all multiple-pipe runs, provisions should be made to keep the lines in their relative positions by the use of either clamps or clips. Lines subject to thermal expansion must be free to slide or roll.

Spring Supports

When there is an appreciable temperature difference between the operating and nonoperating conditions of a piping system, there is a resultant expansion or contraction of the pipe caused by the thermal change. When the system consists entirely of horizontal piping, the differential expansion can be taken care of entirely by means of rollers or by swinging rods of sufficient length. For vertical portions of the piping system, the thermal change in length causes elevation changes. Movement of terminal points or of the structure to which the supports are attached will also result in elevation changes. These elevation changes must be accommodated by some sort of variable spring or constant support.

Helical-coil springs are commonly used for such supports. The degree of variation to be provided by the spring support depends on the conditions of the piping system. For systems which operate at temperatures below 750°F (400°C), a good rule is that the variation in supporting force be limited to 25 percent of the load. It is important to select a spring coil which has been age-processed to eliminate residual stresses resulting from the coiling operation. A conventional helical coil which has not been age-processed will lose more than 10 percent of its supporting effect over its life.

It is not economical to design custom springs. A more prudent approach is to select spring devices which are available commercially. Commercial spring supports are made in three general types. *Spring cushion hangers,* MSS-SP-58 Types 48 and 49, are made for light to medium loads and for ¼-in (6-mm) maximum vertical movement. Generally, this type is used in systems in which the temperature does not exceed 450°F (232°C).

Variable spring supports, MSS-SP-58 Types 51, 52, and 53, are available for a wide range of loads, from about 50 to 30,000 lb (222 to 133,446 N). This type of hanger is used on piping systems in which the resulting variation in supporting force can be tolerated. The commercial varieties available provide a selection of variability.

Constant load supports, MSS-SP-58 Types 54, 55, and 56, are spring devices in which the varying force of the spring is compensated so that the support variability is within the range of ±6 percent. This type of support is used on systems in which there are large thermal movements or critical stress conditions or a combination of both. Such conditions exist on high-pressure, high-temperature steam lines in electric generating stations. These supports are made for loads of approximately 50 to 50,000 lb (222 to 222,410 N) and for vertical movements up to 16 in (406 mm). The variability of these supports is not dependent on vertical movement, and the support is adjusted at the factory for specified load and travel. Therefore, extreme care should be taken in determining loads and travel for the selection of hanger size.

Vibration arising from pump pulse and similar conditions can be a problem in piping systems. Where such vibrations are in resonance with a spring-supported system, the results can be serious. Such conditions can usually be avoided by judicious use of commercially available spring hangers. Systems that respond to exciting vibrations can be controlled satisfactorily by the use of dampening devices. There are two general types to consider: the coiled spring and the hydraulic vibration dampener.

There are two types of coiled-spring vibration dampeners: the opposed-spring type and the double-acting spring type, MSS-SP-58 Type 50. These devices should be arranged so that the springs are in the neutral position during normal operating conditions of the system.

The hydraulic vibration control is a unit which operates by means of a controlled flow of fluid through an orifice. Resistance to movement increases with the speed of displacement. One distinct advantage of the hydraulic device is that there is a minimum of resistance to thermal movement of the piping.

Both spring and hydraulic cylinder devices may be used to control sway and absorb shocks. These same devices may be used to resist reactions from safety valve discharges and similar applications. Both the spring and hydraulic types are available commercially in several sizes. Manufacturers' literature gives comprehensive data for selection and performance characteristics.

Hanger Rod

Rods used for pipe support purposes are usually hot-rolled steel with standard 60° cut threads conforming to ASME B1.1, *Unified Inch Screw Threads,* coarse thread series (UNC). Rolled threads to the same standard may be used. It must be pointed out that the length of a rolled thread cannot be increased by running a die over it, since the basic diameter of the rod is less than the size of the threaded portion (smaller than the thread major diameter).

Safe load capacities of threaded rods are based on the area at the root of the thread. A generally accepted standard for such capacities is given in Table B5.5, taken from MSS-SP-58.

For convenience in ordering and assembling various items, most cataloged pipe support products have a definite relationship between rod size and pipe size, as shown in Table B5.6.

Table B5.6 conforms to Underwriters' Laboratories and Factory Mutual requirements in pipe sizes up to NPS 12 (DN 300). In general, rod sizes less than ⅜ in (10 mm) should never be used to support piping, regardless of its diameter. However, this does not hold true for supports designed for a thoroughly analyzed piping system (i.e., computer-modeled and analyzed). Where exact loads are calculated, the rods and springs are selected on the basis of the load and movement, not pipe size.

TABLE B5.5 Load Rating of Threaded Hot-Rolled Steel Conforming to ASTM A36 or A575 Grade 1020

Nominal rod diameter, in (mm)	Root area of thread		Maximum safe load at rod temp of 650°F (343°C)	
	in^2	(mm^2)	lb	(Newton)
¼ (6)	0.027	(17)	240	(1,068)
5⁄16 (8)	0.046	(30)	410	(1,824)
⅜ (10)	0.068	(44)	610	(2,713)
½ (15)	0.126	(81)	1,130	(5,026)
⅝ (16)	0.202	(130)	1,810	(8,051)
¾ (20)	0.302	(195)	2,710	(12,055)
⅞ (22)	0.419	(270)	3,770	(16,770)
1 (25)	0.552	(356)	4,960	(22,063)
1¼ (32)	0.889	(574)	8,000	(35,586)
1½ (40)	1.293	(834)	11,630	(51,733)
1¾ (44)	1.744	(1,125)	15,690	(69,792)
2 (50)	2.292	(1,479)	20,690	(92,033)
2¼ (57)	3.021	(1,949)	27,200	(120,991)
2½ (65)	3.716	(2,397)	33,500	(149,015)
2¾ (70)	4.619	(2,980)	41,600	(185,045)
3 (80)	5.621	(3,626)	50,600	(225,079)
3¼ (83)	6.720	(4,335)	60,500	(269,116)
3½ (90)	7.918	(5,108)	71,260	(316,979)

Snubbers

A snubber, or shock arrestor, MSS-SP-58 Type 47, is a mechanical or hydraulic type of support that is used to restrain dynamic loads. Such loads can result from a seismic event, water hammer, steam hammer, or relief valve thrust.

The primary advantage of the snubber is that it can be installed at locations where thermal displacement precludes the use of a ''rigid'' support. Under the slow and gradual displacement of the pipe due to thermal action, a snubber is designed to slowly telescope (in or out) to accommodate the movement of the pipe. When, however, a sudden impact load acts upon the snubber, internal braking devices

TABLE B5.6 Relation between Pipe and Rod Sizes

NPS	(DN)	Rod size, in (mm)
2 and smaller	(50 and smaller)	⅜ (10)
2½ to 3½	(65 to 90)	½ (15)
4 and 5	(100 and 125)	⅝ (16)
6	(150)	¾ (20)
8 to 12	(200 to 300)	⅞ (22)
14 and 16	(350 and 400)	1 (25)
18 and 20	(450 and 500)	1¼ (29)
24	(600)	1½ (40)

engage, thus controlling the movement of the pipe. The snubber is said to ''lock up.'' In this condition, the snubber acts as though it were a rigid restraint.

Snubbers are not capable of supporting gravity loads. Under certain circumstances, the weight of the snubber bearing on the pipe should be included in the piping stress analysis.

Riser Supports

A riser or vertical section of a piping system often creates special support problems. The support of service water lines and fire protection systems is governed in the first case by the local building codes and in the latter case by National Fire Protection Association (NFPA) codes. These codes dictate the type and frequency of riser supports used on those systems; however, piping systems that are subject to thermal movement present more complicated support problems, and each case must be considered separately.

Risers are equivalent to concentrated loads in a piping system; however, in the support of this load, several important points must be considered:

1. Is the support to take the entire riser weight, or is the riser weight to be distributed among several supports?
2. Are hydrostatic test conditions more severe than service conditions? That is, will the cold-water-filled condition impose stresses on the support higher than allowable (in cold condition), compared with the hot operating condition and the imposed stresses? When this decision is made, the system erection sequence should be considered and a determination made of whether other supports are effective or ineffective during hydrostatic testing.
3. Is the support to be located at a point of zero vertical movement and hence to be considered a rigid support? If this is the case, then the horizontal and vertical movements of riser end points must be analyzed. Pure horizontal movement can be provided for by long support rods that are allowed to swing. However, if vertical movement exists, it may cause tipping, and then it must be assumed that the entire load can transfer to one support rod. In this case, the riser support should be designed for twice the calculated load.

The support arms of the pipe attachment or the riser clamp, MSS-SP-58 Type 42, must extend out from the pipe far enough to clear any insulation. If springs are part of the support assembly, then the arms must be long enough to provide clearance between the pipe insulation and the springs used.

The final consideration in the design of a riser support is its attachment to the pipe. Since a thermal change occurs between the operating and nonoperating conditions of the pipe, the frictional grip of the clamp on the pipe cannot be relied upon, and there must be some positive means of engagement between the pipe and the clamp. Sometimes a complete ring is welded to the pipe. The more usual procedure is to use four lugs welded to the pipe, positioned at points which bear on the clamp. These lugs are normally made of material compatible to the pipe material and are to be welded on three sides. Suggestions for the selection of welded lugs can be found in PFI ES-26.

SUPPORT REQUIREMENTS FOR SPECIFIC PIPING MATERIALS

Ductile-Iron Pressure Pipe

Hanger sizes depend upon the outer diameter of pipe which is to be supported. The diameter of cast-iron pressure pipe exceeds that of nominal-size steel pipe and varies with its class or intended service. Therefore, selection of supports must take into consideration the actual outside diameter of the piping being installed.

Ductile-Iron Soil Pipe

Support sizes correspond to sizes for steel pipe. MSS-SP-58 Types 1, 7, 8, and 11 are normally used.

Asbestos-Cement Pressure Pipe

Support sizes depend upon the class of pipe to be supported. The outer diameter of this pipe exceeds that of steel pipe and varies with its class or service.

For all three categories (i.e., ductile-iron pressure pipe, ductile-iron soil pipe, and asbestos-cement pressure pipe) support spacing should provide at least one support for each length of pipe (piping lengths are a maximum of 20 ft, or 6.1 m, with the support preferably located adjacent to the joint). Also, each change of direction or branch connection should be supported.

For ductile-iron pipe with bell and spigot ends, using either a push-on type of joint or a mechanical joint, the pipe support engineer must consider the following:

- Both joint types use a rubber gasket to seal the joint, and they allow a certain amount of deflection and longitudinal displacement while maintaining the seal.
- To prevent leaks caused by misalignment of the pipe section at a joint, pipe supports are positioned immediately behind the pipe bell.
- Supports are normally not placed under spigots adjacent to bells, owing to possible undesirable effects on the joint.
- Pipe supports should cradle the pipe in a saddle.
- The saddle must follow the contour of the pipe in order to minimize stress concentrations.
- A saddle angle between 90° and 120° is desirable, with a minimum saddle width (i.e., the length along the longitudinal axis of the pipe) of

  $$(2Dt_e)^{0.5}$$

  where D = actual outside diameter of pipe, in (mm); t_e = nominal pipe wall thickness, in (mm).

Pipe supports should prevent any lateral and vertical movement of the pipe in order to prevent possible failure of the pipeline. Thermal expansion of ductile-iron pipe is not usually a concern because of the nature of the push-on or mechanical joint.

Buried lines are usually supported by tamped backfill, except that lines buried under building slabs are sometimes supported from the slab with hairpin straps or rods suitable to the soil characteristics.

Special consideration is required in cases where movement occurs either at the terminal points or in the structure to which supports are attached. Spring hangers may be required to allow for deflection.

Copper Tubing

Since supports made for copper tubing are designed to fit the tubing diameter, it is not recommended that supports which have been formed for piping be improvised as tubing supports. Most supports for copper tubing are electroplated with copper for easy identification. MSS-SP-58 Types 1, 8, 9, 10, 11, and 12 are available in tubing sizes.

Where there are indications that electrolysis may occur because the support and tubing are made of dissimilar metals, the support should be lined to prevent such action.

Fire Protection Systems

Sprinkler supports will usually be subject to the consideration and approval of the same insurance agencies that have jurisdiction over the sprinkler-system piping and layout. The supports will be required to conform closely to the standards specified in the National Fire Codes published by the National Fire Protection Association.

Some of the important fire protection codes and standards of concern to the pipe support engineer follow:

- NFPA 11, *Foam Extinguishing Systems*
- NFPA 12, *Carbon Dioxide Extinguishing Systems*
- NFPA 12 A/B, *Halon Fire Extinguishing Systems*
- NFPA 13, *Sprinkler Systems*
- NFPA 14, *Standpipe and Hose Systems*
- NFPA 15, *Water Spray Fixed Systems*
- NFPA 16, *Foam-Water Sprinkler and Spray Systems*
- NFPA 17, *Dry Chemical Extinguishing Systems*

If the system is other than a standard building water-sprinkler system, the particular standard should also be consulted; e.g., in the design or selection of supports for a foam fire extinguishing system, NFPA 11 should be consulted.

The rules are explicit with respect to support spacing, fasteners, and method of fastening. NFPA also regulates the material used in the construction of supports. Underwriters' Laboratories, Inc., Factory Mutual Engineering Division, and Underwriters' Laboratories, Inc., of Canada have tested and listed or approved all types of supports necessary to meet the various conditions of construction.

The placing of supports along the pipe is an important consideration to ensure adequate support for the piping. In addition to the consideration of pipe support, consideration must be given to sway bracing especially in deluge systems, riser supports, soundness of the attachment, vibration, and pipe slope for drainage. The stability of the support during a fire, corrosion, and aging are also of prime importance. A sprinkler system may be installed for many years before it is operated, and it must always operate in the manner for which it was designed.

Plastic Pipe

There are many types of plastic pipe, both rigid and semirigid. Under normal conditions, rigid plastic pipe can be supported using conventional supports with the spacing half that used with steel pipe or as recommended by pipe manufacturers. The support of plastic pipe or tubing should be continuous if, owing to the nature of the plastic, it will become flexible from elevated temperatures or from line contents. The continuous support can be in the form of a light angle or channel into which the plastic pipe is laid.

In some cases, wear shoes or pads should be added to plastic pipe where it may rub against steel supports. The use of wear pads will prevent the abrasive action caused by thermal movement, thus preventing damage to the pressure boundary.

It is suggested that recommendations of the manufacturer of the specific plastic pipe also be followed. Refer to Part D of this handbook.

Glass Pipe

Glass pipe is used for laboratory service, food processing, and many industrial applications which require the durability or chemical resistance of glass pipe. Because of the nature of glass, special consideration of supports and attachments is necessary.

Standard pipe support components can be used; however, in all cases the support, even if it is painted or electroplated, must have a padding or cushion to avoid scratching the pipe. The support should fit loosely around the pipe, yet contact the pipe in a manner to distribute the load over the largest possible area. Point loading must be avoided. The system of supports must be designed with the fewest rigid anchor points possible.

Glass pipe will generally require two supports per 10-ft (3.05-m) section. One extra support will be required if there are three or more couplings in a 10-ft (3.05-m) section. For maximum protection and accessibility, supports should be placed about 1 ft (0.3 m) from each joint or coupling.

Glass pipe supports and layouts should be designed in accordance with general fundamentals applicable to other piping materials. However, extreme care must be taken to minimize strain and scratching of the glass. The pipe manufacturer and reputable support manufacturers should be consulted in the design of support systems for glass pipe.

DESIGN DETAIL CONSIDERATIONS

ASME Code for Pressure Piping

Specific design requirements for piping support are included in the sections of ASME B31, *Code for Pressure Piping*, listed below:

- B31.1, *Power Piping*
- B31.2, *Fuel Gas Piping*

- B31.3, *Process Piping*
- B31.4, *Liquid Transportation Systems for Hydrocarbons, Liquid Petroleum Gas, Anhydrous Ammonia, and Alcohols*
- B31.5, *Refrigeration Piping*
- B31.8, *Gas Transmission and Distribution Piping Systems*
- B31.9, *Building Services Piping*
- B31.11, *Slurry Transportation Piping Systems*

In addition, ASME Boiler and Pressure Vessel Code, Section III, defines rules for piping supports used in nuclear power plants.

These requirements must be adhered to on piping installations when piping must conform to these codes. In most cases, supports conforming to MSS-SP-58 are acceptable for these installations.

Government Specifications

The Federal Specification WWH-171, of the latest issue and entitled "Hangers and Supports, Pipe," is the governing specification for all federal agencies. This specification illustrates types of pipe hangers and supports and lists the requirements of certain applications.

Design Temperature

Design temperatures for parts of hangers and supports in direct contact with pipe shall be the temperature of the fluid contained in the pipe. Parts of hangers and supports not in direct contact with pipe may be designed to a temperature reduced by 100°F per 1 in (55°C per 25 mm) away from the pipe wall. Allowable stresses for materials commonly used in the design of pipe hangers and supports are listed in applicable codes and standards.

Welded Fabrication

Welded fabrication shall be accomplished with good engineering practice as prescribed by the appropriate welding code. In the United States, the American Welding Society (AWS) and the American Society of Mechanical Engineers, Section IX, are the governing codes. In Germany, DIN EN 288 controls welding, and in Britain it is BS 5135. Attachments welded directly to the pipe must be of appropriate (compatible) chemical composition, and the process of attachment must conform to the requirements for fabrication of the pipe regarding preheating, welding, and stress relieving.

Cold Spring

The cold-springing procedure for piping systems involves, basically, the cutting short of each segment of piping in an amount equal to some specific percentage of the normal thermal growth of the segment, with proper allowance to compensate for possible terminal connection movements. The cumulative effect results in an offset gap between the piping ends at the point of final field closure. The drawing together and alignment of the piping ends by the application of required forces and moments are called *cold pull* and result in a slight relocation of all points along the entire piping system. This relocation is the only effect that cold springing has on supports. The piping is then considered to be in the cold-sprung position, which is equivalent to the cold operating position. The movement at all support points from the erected to the cold-sprung position must be calculated, and provision made for this movement in the form of hanger rod adjustment.

Adjustment

It is necessary to provide vertical adjustment to attain the desired elevation of the piping system. On piping supported from above, it may suffice to adjust an MSS-SP-58 Type 1, 5, 6, 9, or 10 support through the yoke portion by raising or lowering the nut on the rod. For larger ranges of adjustments, it is necessary to provide a turnbuckle, MSS-SP-58 Type 13 or 15, in the hanger rod. It is also practical to select a top attachment whereby adjustment can be made at the top of the hanger rod.

On piping which is supported from below, provision for adjustment can be made with screw thread stanchions, MSS-SP-58 Type 38, or by shims or grout.

Protective Coatings

Protective coatings are normally applied to pipe supports for corrosion resistance. Metallic coatings may be applied by either the electroplating or the hot-dip process. Nonmetallic coatings, if selected for specific purposes, should be applied as recommended by the manufacturer. Consideration must be given to coatings used on threaded parts that are to be assembled after coating.

OTHER PIPE SUPPORT CONSIDERATIONS

Transportation and Storage

Transportation and storage should be carried out with care to avoid damage to the hanger components, especially load calibration bolts and connection threads. If stored in the open, all components should be protected from dirt and water.

Assembly

All items should be assembled as completely as possible on the ground. Hanger rod threads should be greased prior to assembly to allow easy adjustability under load.

Installation

Locate, position, and connect the structural attachment to the steel or concrete. Be careful to orient the structural attachment pin or bolt in the right direction.

Next, move the hanger assembly into position and secure, using the connection parts. When installing an item which contains a nameplate, load scale, adjustment bolts, travel stops, or other device which requires accessibility, be sure to install the item so that these features are visible and accessible. Locate the position for the pipe attachment and assemble it to the pipe. Complete the connection between the hanger and the pipe attachment.

Adjustment

Adjust the hanger rods or adjustment parts to take up the pipe load by the hanger components. Be sure to achieve minimum thread engagement before taking up full load. When installing springs, continue to take up on the load until the spring setting balances with the supporting load. When all adjustments and evaluations are complete, lock all required items using locknuts, retainers, clips, or other locking item supplied. After all pipeline testing is complete and prior to operation, adjust the springs until the travel stops can be removed by hand. Remove the travel stops prior to operation to allow the spring to move freely.

Inspection

The following items should be verified prior to operation:

1. The support is installed in the correct location.
2. The travel and load positions are correct for springs.
3. The travel stops are removed, and the spring is ready for operation.
4. The minimum thread engagement is met on all threaded items.
5. All locknuts or other locking devices are in place.
6. All connection pins and connection bolts are properly loaded and secured.

CHAPTER B6

HEAT-TRACING OF PIPING SYSTEMS

Chet Sandberg, P.E.
Raychem Corporation
Menlo Park, CA

Joseph T. Lonsdale
SensArray
Santa Clara, CA

J. Erickson, P.E.
Retired, E.I. DuPont De Nemours & Company
Newark, DE

The term *heat-tracing* refers to the continuous or intermittent application of heat to a pipeline or vessel in order to replace heat loss to ambient.[1] The major uses of heat-tracing include freeze protection, thawing, maintenance of fluids at process temperature (or at pumping viscosities), prevention of fluid component separation, and prevention of gas condensation.

The following examples are typical of the diversity of heat-tracing applications: freeze protection of piped water; transfer of molten process chemicals such as phosphoric acid, sulfur, and *p*-xylene; low-viscosity maintenance of pumped fluids including petroleum products, vegetable oils and syrups, polymeric and resinous materials, and aqueous concentrates and slurries; avoidance of condensation and subsequent improper burning of fuel gas in refineries; preventing moisture from condensing out of piped natural gas; preventing freezing of control valves and compressor damage; elimination of pipeline corrosion due to wet hydrogen sulfide resulting from condensed moisture.[2]

Heat-tracing may be avoided in situations where heat loss to the environment can be effectively minimized. In cold climates or areas with severe winters, water pipes are often buried below the frost line. Alternatively, they may be kept from freezing by running them through heated buildings.[3]

In cases where flow is intermittent, tracing might be avoided by designing a self-draining system such as those used for steam condensate returns. Pipes may also be cleared after use by means of compressed air, steam, or solvent flushing or "pigging." The self-draining method is suitable only for infrequently used pipes due to the high labor costs involved in cleaning and the potential cost and scope of repair, should a pipe not empty properly.[4]

A third approach in the avoidance of tracing is to design for 100 percent flow. This practice is not recommended since equipment breakdown or process interruption may result in an irreversible drop in the temperature of the piped fluid.

TYPES OF HEAT-TRACING SYSTEMS

Heat-tracing systems can be divided into two broad classes, electric and fluid. Fluid heat-tracing systems utilize heating media at elevated temperatures to transfer heat to a pipeline. The fluid is usually contained in a tube or a small pipe attached to the pipe being traced. If steam is the tracing fluid, the condensate is either returned to the boiler or dumped. If an organic heat-transfer fluid is employed, it is returned to a heat exchanger for reheating and recirculation. In general, heating of tracing fluids can be provided by waste heat from a process stream, burning of fossil fuels, steam, or electricity.

Electric heat-tracing systems convert electric power to heat and transfer it to the pipe and its contained fluid. The majority of commercial electric heat-tracing systems in use today are of the resistive type and take the form of cables placed on the pipe. When current flows through the resistive elements, heat is produced in proportion to the square of the current and the resistance of the elements to current flow. Other specialized electric tracing systems make use of impedance, induction, and skin conduction effects to generate and transfer heat.

Table B6.1 lists the operating and exposure temperatures and the principal characteristics of the different types of heat tracing.

FLUID HEAT-TRACING

Steam

A number of desirable features made steam the original heat-tracing system of choice to maintain process temperature and provide freeze protection. Steam's high latent heat from vaporization is ideal for heat-transfer applications. Only a small quantity is required for a large heating load; and it can heat a line quickly, condense at constant temperature, and flow to the point of use without pumping. Steam is universally available and nontoxic.[5]

Today, energy efficiency and minimization of expensive labor are priority considerations in selecting an economical heat-tracing system. With the advent of highly reliable electric heat-tracing, the popularity of steam heat-tracing is declining.

Steam is more expensive to install and maintain than electric resistance heaters. Periodic leaks and failed steam traps in a steam-traced system waste energy and demand additional labor costs for repair and replacement. In addition, a single steam tracer provides 2 to 10 times more heat than most applications require. By contrast, electric tracing systems provide better temperature control and much more efficient utilization of energy. This means that even though the cost per unit energy is lower for steam, total energy costs for electric tracing are usually significantly lower.[6]

In most heat-tracing applications, saturated steam is supplied at pressures of 30 to 150 psig (210 to 1035 kPa) (298°F/147°C and 367°F/186°C). The ability to

TABLE B6.1 Comparison of Heat-Tracing Methods

Heat-tracing method	Max. operational temp.	Max. exposure temp.	Advantages	Disadvantages
		Heat transfer fluids		
Steam	400°F (204°C)	None	Takes advantage of waste steam, explosion environment safe, high heat-transfer rates	Nonuniform heat distribution; expensive to install and maintain; imprecise temperature control; wastes energy
Organics	500–750°F (260–400°C)	None	Moderate temperature control, wide temperature range, low freezing temperatures	Relatively expensive; needs a circulating system; leaks can be hazardous
Glycols	250°F (121°C)	325°F (160°C)	Moderate temperature control; depresses freezing point, providing protection against freezing when not in use; lower operating cost than steam	Relatively expensive (glycols are cheaper than heat process fluids); high installed costs; needs a circulating system; leaks can be hazardous
		Electric		
Self-regulating	150–300°F (65–149°C)	185–420°F (85–215°C)	Will not burn out—most reliable electric heating cable; energy efficient	Limited temperature range
MI cable	1190°F (590°C)	1500°F (800°C)	Rugged; capable of high temperature and high power	Difficult to field cut; a break in the cable causes an open circuit; should not be crossed over itself; can be damaged by moisture penetration
Zone	150–400°F (65–204°C)	250–1000°F (121–538°C)	Can be field cut; if a heating element fails, circuit is maintained	Relatively fragile; can self-destruct from its own heat; can burn out if crossed over itself
Skin effect	400°F (204°C)	450°F (232°C)	Simple components; rugged; needs relatively few energy inputs; can be part of a prefabricated insulated pipe bundle	Impractical for applications less than 5000 ft long; design is complex
Impedance	Up to failure of supply cable and connections	None	High heat-transfer rates and close temp. control; high temp. capability, heating structure; element cannot burn out	Expensive custom design; entire pipeline must be electrically isolated from the support
Inductance	Up to Curie point	None	High-temperature capability; high heat-transfer rates	Very expensive; difficult custom design, not commercially exploited

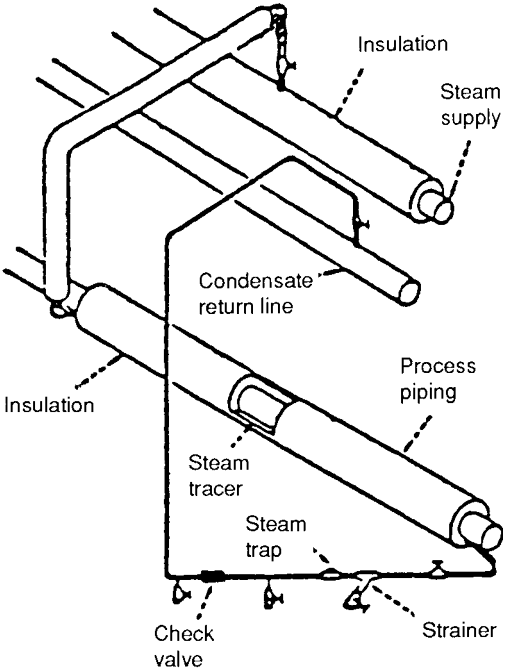

FIGURE B6.1 Typical components of a steam-tracing system. (*I. P. Kohli, "Steam Tracing of Pipelines,"* Chem. Eng., *March 26, 1979, p. 158, Fig. 1.*)

continuously remove condensate via a steam trap assembly allows the steam tracer to provide a constant-temperature source of heat.

The overwhelming majority of steam-traced piping systems employ external tracing. Straight runs of the steam pipe or tubes are attached to the pipe, and the entire assembly is covered with preformed sectional insulation (see Fig. B6.1). Valves, fittings, and instruments are *heat sinks* (system components of large surface area and exposed metal surfaces to which system heat will flow and be lost to the environment); and to deliver the requisite amount of heat, several loops of the tracing tube are coiled around them before being covered with insulation. This configuration helps reduce *tailing*, i.e., the tendency of steam to lose heat and condense along the line with loss of pressure (see Fig. B6.2).

In the majority of applications such as freeze prevention and viscosity maintenance in smaller-diameter pipes, a single tracer provides more than the required heat. However, for processes requiring greater heat input, the heat-transfer characteristics of steam tracers can be significantly improved by placing heat-transfer cement between the trace and the pipeline, greatly increasing the amount of surface for conductive heat transfer.[7] Temperatures of steam-tracing systems can vary by as much as +10°F (6°C) between underground pipelines and +20°F (11°C) for pipelines running aboveground. The inability to achieve precise temperature control is attributed to three factors operating in tandem.[8]

1. Saturated steam is delivered at the desired pressure by means of a pressure-

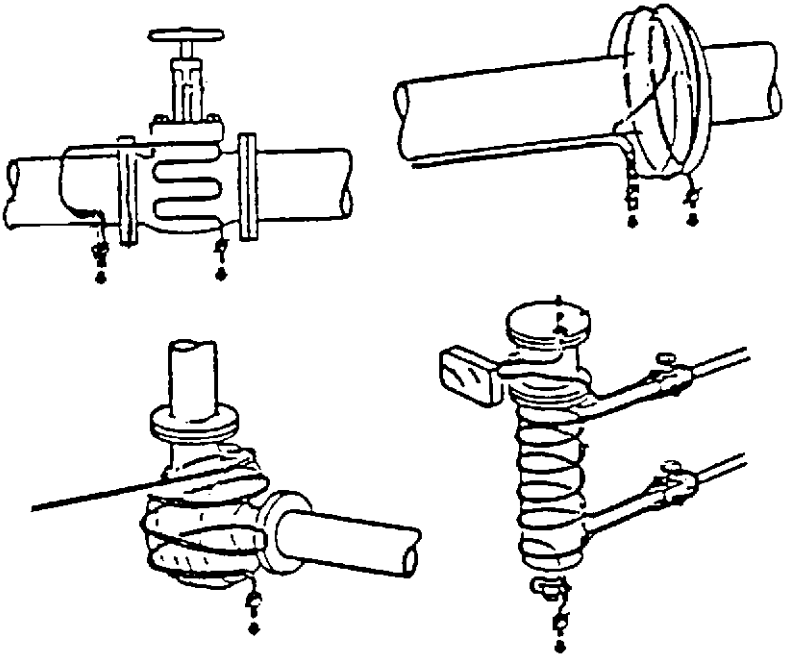

FIGURE B6.2 "Coiling" arrangement for tracing valves, flanges, casings, and instruments. Coils act as expansion joints for steam tracing systems. (*I. P. Kohli, "Steam Tracing of Pipelines,"* Chem. Eng., *March 26, 1979, p. 159, Fig. 3.*)

reducing valve. As the pressure is reduced, the saturated steam becomes superheated. The excess heat is rapidly dissipated in the system.

2. Uneven contact between the steam tracer and process pipe produces an uneven distribution of temperature. This effect becomes more significant as the temperature difference between pipe and tracer increases. When the steam becomes superheated, the temperature difference reaches a maximum.
3. Tailing also affects the temperature of the surrounding steam.

A more precise control of steam tracer temperature can be achieved by the use of steam jacketing (see Fig. B6.3) or temperature-sensitive steam valves. However, these methods are rarely used as they provide a level of temperature control inferior to that of electric heat-tracing, and at a significantly greater cost.

Circulating Media

Circulating media are the most expensive heat-tracing systems and are specified for special-process or ambient conditions (see Table B6.1 and Ref. 9). The virtue of circulating fluids is the ability to provide protection and reasonable control at temperatures above and below those achievable with steam-tracing. Circulating media systems can be separated into two classes; oils and organic heat-transfer

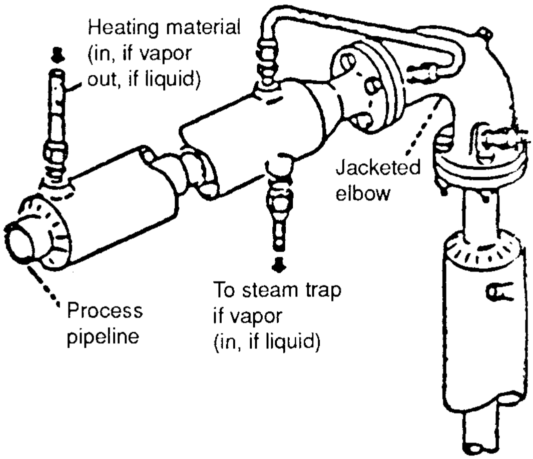

FIGURE B6.3 Steam jacketing is expensive and employed only in special high-heat-demand situations. (*I. P. Kohli, "Steam Tracing of Pipelines,"* Chem. Eng., *March 26, 1979, p. 159, Fig. 2.*)

fluids suitable for high-temperature applications, and glycols with antifreeze properties that make them especially useful in cold climates, where they will not freeze even when used intermittently.

ELECTRIC RESISTANCE HEAT-TRACING

Introduction

Significant commercial use of electric heat-tracing began to take hold in the 1950s. Electric heat-tracing served as a visible alternative in situations where steam could not be used or was impractical. Typical early applications included the electric tracing of transfer lines for oil, asphalt, and waxes. Electric tracing proved especially useful for long runs of pipe. [Steam tracers are generally limited to runs of 100 to 200 ft (30 to 60 m). Tracing long or multiple pipe runs with steam can significantly increase both tracing complexity and cost.]

At the outset, hardware had to be adapted from other resistance heating applications. Lead-sheathed soil-heating cable was used extensively for waterline freeze protection while longer runs of pipe were traced with mineral-insulated copper-sheathed cable. For higher-temperature service, tubular heaters (normally used for immersion and clamp-on applications) were converted for pipe tracing, and controllers were adapted from furnaces and consumer appliances in order to control temperature.

Self-Regulating Heaters

Since their introduction in 1971, self-regulating heaters have become the most popular form of electric heat-tracing and are currently offered by most major vendors of industrial heat-tracing. Self-regulating heat-tracing has an advantage with respect to other heat-tracing products because this technology eliminates the possibility of heater burnout due to the inability to dissipate internally generated heat—the most common cause of heater failure (Fig. B6.4).

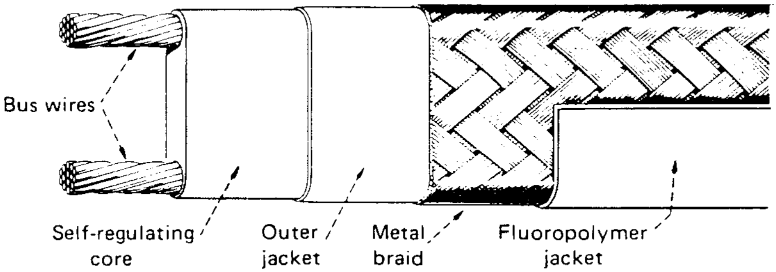

FIGURE B6.4 Components of a self-regulating parallel resistance heat-tracer. (*Chet Sandberg,* Electrical Heat Tracing Systems for Use in Pulp and Paper Plants; Considerations for the 1990's. *ISA Pulp and Paper Industries Division Symposium (in conjunction with TAPPE), Nashville, TN, March 1993.*)

Self-regulating tracers are usually provided in the form of a heater strip consisting of two parallel 20 to 10 American wire gauge (AWG) bus wires embedded in a conductive polymer core, which serves as the heating element and over which a polymeric insulator is extruded. The entire assembly is then covered with a metal braid to provide grounding and additional mechanical protection. Another polymer jacket can be added (see Fig. B6.4). The heater core consists of carbon particles embedded in a polymer matrix. Heat is generated by resistance to current flowing through the conductive polymer heating element. As the temperature of the conductive core increases, so does the electric resistance. The result is a diminishing output of heat for each successive increment of temperature elevation. Since power output is a function of temperature at any location in the element, the conductive core behaves as a temperature-sensitive rheostat guarding against low- as well as high-temperature failure (see Figs. B6.5 and B6.6).

Self-regulating tracers can be cut to any desired length and field-installed within the limitations of the voltage drop on the bus wires. They have good impact resistance and are routinely handled in the field. The self-regulating feature pro-

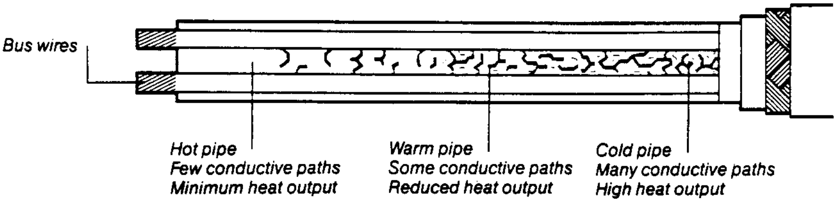

FIGURE B6.5 Relationship of resistive properties to changes in polymer structure with temperature in the conductive core of a self-regulating parallel resistance heat-tracing tape. (*Karen Henry,* Introduction to Heat Tracing, *Cold Regions Research and Engineering Lab, Report No. CRREL-TD-86-1, June 1986, p. 13.*)

vides a tremendous boost to operational reliability while cutting installation, maintenance, and energy costs. It also adds a dimension of safety unavailable with any other form of electric resistance tracing product because the heater cannot be destroyed by its own heat output.

The only serious drawback of self-regulating tracers is the upper limit on operating temperatures, 366°F (186°C) for constant exposure and 420°F (215°C) for intermittent exposure.[13] Self-regulating tracers can fail as a result of exposure to excess heat from the piped fluid or from steam cleaning. For this reason, the tracer must be selected to conform to actual process conditions.

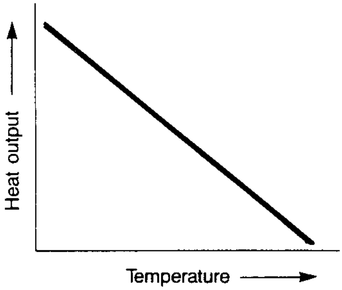

FIGURE B6.6 Graph of resistance versus temperature for a self-regulating parallel resistance heat-tracer. (*G. R. Dixon*, Steam versus Electric Process Heat Tracing. *Mississippi Department of Energy and Transportation Annual Conference, April 22–24, 1987, p. 5, Fig. 4.*)

Zone Heaters

First introduced in 1971, zone heaters were initially the most popular form of parallel resistance heaters; and by the mid-1970s, they were being used in a large percentage of electric heat-tracing applications. Since that time, they have been increasingly replaced by self-regulating heaters.

A typical zone heater consists of two insulated bus wires wrapped with a small-gauge (38 to 41 AWG) nichrome heating wire, covered with polymer insulation and sheathed in a metallic braid covered with an optional polymer jacket. The heating wire is connected to alternate bus wires at nodes every 1 to 4 ft (0.3 to 1.2 m), and the distance between connections constitutes a (heating) zone.[14,15,16] Heat is generated by current flowing between the bus wires through the heating wire (see Fig. B6.7).

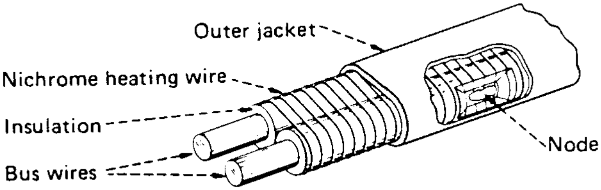

FIGURE B6.7 Components of a zone-type parallel resistance heat-tracer. (*G. B. Dixon*, Steam versus Electric Process Heat Tracing, *Mississippi Department of Energy and Transportation Annual Conference, April 22–24, 1987, p. 5, Fig. 5.*)

The parallel circuit configuration of zone heaters means that output is independent of cable length and that systems can be designed and adapted by purchasing cables of a specific wattage which are cut to length in the field. (It is important to remember that the length of cable between the cut and the nearest node will not receive power and should not be depended upon for heater service.) As a result,

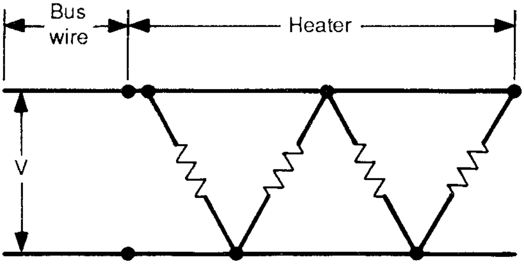

FIGURE B6.8 Simplified circuit diagram for a zone-type parallel resistance heater. (*Karen Henry*, Introduction to Heat Tracing. *Cold Regions Research and Engineering Lab, Report No. CRREL-TD-86-1, June 1986, p. 8, Fig. 3c.*)

design and installation costs are significantly reduced.[17] Zone heaters use standard voltages, and their parallel circuitry preserves system function in the event of individual heater element failure (see Fig. B6.8)—an important advantage over series circuits (see Fig. B6.9).[18]

Zone heaters use thinner resistive wires than series heaters and are more susceptible to damage from impact.[19,20,21] Fiberglass-insulated cables are available with an exposure temperature up to 1000°F (538°C), but they are susceptible to moisture.

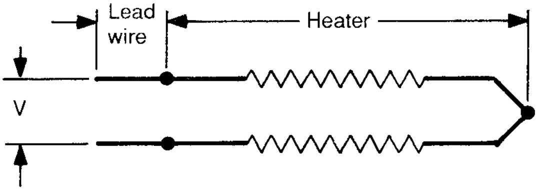

FIGURE B6.9 Simplified circuit diagram for a series-type resistance heater. (*Karen Henry*, Introduction to Heat Tracing. *Cold Regions Research and Engineering Lab, Report No. CRREL-TD-86-1, June 1986, p. 8, Fig. 3a.*)

The addition of a fluoropolymer jacket for moisture protection reduces the exposure temperature rating to 545°F (285°C). Perhaps the biggest drawback of zone heaters is their susceptibility to burnout. With their combination of constant wattage and polymer insulation, zone heaters are vulnerable to destruction from self-generated overheating.[22] As with all constant-wattage heaters, zone heaters to be used in hazardous (classified) areas require factory calculations to determine if the system conforms to the prescribed T rating (see the later section ‘‘Area Classification’’).

Mineral-Insulated Cable (Constant-Wattage Series) Heater

Mineral-insulated (*MI*) *cable* was introduced in the early 1950s as an electric powered alternative to steam and liquid heat-tracing.[23] MI cable is a constant-wattage, series resistance heater in which the entire circuit acts as a continuous heating element.

Heat is generated by current flowing through a nichrome, copper, or other metal

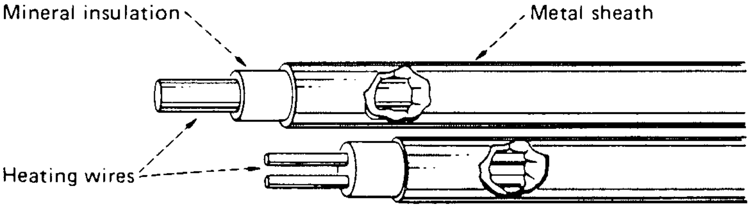

FIGURE B6.10 Components of mineral-insulated heat-tracing cable. (*G. B. Dixon*, Steam versus Electric Process Heat Tracing, *Mississippi Department of Energy and Transportation Annual Conference, April 22–24, 1987, p. 4, Fig. 2.*)

conductor, insulated with magnesium oxide and encapsulated in an outer metallic sheath of copper, stainless steel, Inconel, or other suitable metals (see Fig. B6.10).[24]

MI cable is capable of carrying high heating loads. Given the proper conductor and sheath alloys, it can be used in applications up to 1500°F (800°C).[25]

Its high impact resistance and general ruggedness allow it to stand up to the rough handling in the field. Circuits usually are factory-fabricated to length prior to installation, which can be a source of problems when piping changes are made since cables are difficult to modify in the field. Field fabrication of circuits is sufficiently complex that the training of installation personnel should be supervised by a trained factory technician.[26,27] MI cable system circuits must be individually designed, or variable-voltage controls must be provided to set circuit parameters. Voltage control may also be required for short lengths due to the low resistance.[28]

As with all series circuits, a single break in the cable causes the entire system to fail (breaks in the outer sheathing can cause failure due to absorption of moisture and subsequent loss of insulating properties).[29,30] Another disadvantage of MI cable is the risk of overheating from excessive currents or poor thermal dissipation. Hazardous-area installations must be factory-calculated to ensure conformance with the proper *T* rating (see later section ‘‘Area Classification’’).

Series Resistance Polymer-Insulated Cable

Polymer-insulated series resistance cables can be used with various conductor materials. Nichrome is suitable for short circuits, but the length must be either predetermined to suit the available voltage or field-cut and provided with a variable-voltage supply. Conductors such as copper offer a measure of self-limiting heater properties, since their resistance increases with temperature. This allows greater latitude of use, and copper conductors with their 600-V limitation and relatively low cost (even with the mandatory metallic braid and optional overjacket) are especially favored for long-line applications with this type of heater.

The circuits must be designed and controlled to minimize high temperature, because a failure at one spot disables the complete circuit. The possibility of catastrophic failure (series circuit) due to overheating and melting of the polymer insulation puts this type of tracing in unfavorable competition with parallel resistance heat-tracing systems, which dominate in the low- to moderate-temperature application ranges.

SKIN EFFECT TRACING

Skin effect systems are primarily applicable to the tracing of long pipelines. The *skin effect* is based on the tendency of an alternating current to flow in the layers near the surface (skin) of a current-carrying ferromagnetic conductor (see Fig. B6.11). In a typical skin effect tracer, the heating element is a carbon-steel pipe of small diameter welded to the fluid-carrying pipeline to be traced. Running through the heat tube is an insulated, low-resistance copper wire. The alternating magnetic field created by this alternating-current-carrying conductor causes the return current in the small heat tube to be concentrated toward the inner wall of the tube. This phenomenon is called the *proximity effect*. Because almost no current flows on the outer surface of the heat tube, there is no measurable potential there and the entire piping system can be grounded at any number of points.[31,32]

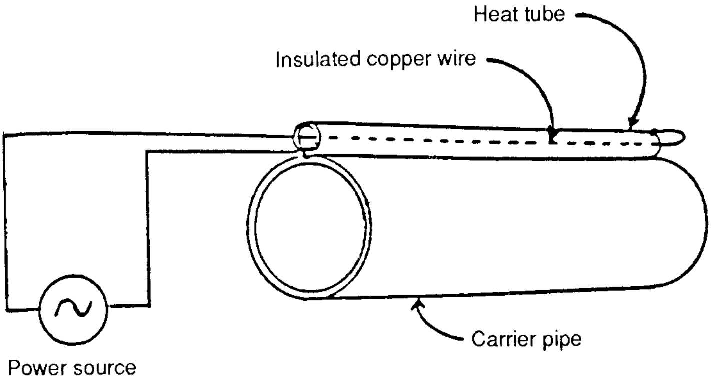

FIGURE B6.11 Components and electrical flow in skin effect heat-tracing (*N. B. Carson*, A New Method for Heat Tracing Long Pipelines, *ASME, Petroleum Mechanical Engineering Conference, Dallas, Texas, September 1974, p. 1, Fig. 3.*)

The requirement for custom system design makes skin effect systems costly, notwithstanding the ability to make use of ordinary low-cost materials, including prefabricated components and standard construction techniques. The method maintains a low-temperature difference between fluid and tube circuit wall (18°F/10°C),[33] is considered reliable, and is easy to repair. Single-circuit envelopes of up to 25,000 ft (7500 m) are feasible with supply voltages of 3000 V. Higher supply voltages make even longer circuits possible.[34] One reference reports a single power station capable of supplying service up to 30 mi (48 km) of pipeline.[35] On the other hand, Carson qualifies this with a practical limitation of 10 mi (16 km), since above the 5-kV supply required for a line of this length, cable and switchgear costs become an increasing consideration.[36] This seems to be confirmed by Ando and Takki,[37] who report the construction of a 68-mi (108-km) skin effect heat-tracing system powered by 12 substations with a transformer voltage of 13,800 V.[37]

Skin effect heat-tracing is generally not cost-effective for pipelines shorter than 5000 ft (1500 m),[38] its upper temperature limit of approximately 400°F (204°C) is set by the maximum exposure temperature of the conducting wire insulation,[39] and the method is not adaptable for complex piping. Installations cannot be modified, and the complete system fails with a single line break.

IMPEDANCE HEAT-TRACING

In impedance heating, the pipe itself becomes the heating element. The generation of heat is produced by resistance to current flow (see Fig. B6.12).[40] Impedance heat-tracing has the ability to reach very high operating temperatures, limited only by the design and contents of the piping system. Since the pipe is the heating element, it is the supply cable and connections which can be vulnerable to burnout.[41] This technique has high heat-transfer rates and uniform heat distribution and provides excellent temperature control at the control point, using any one of several automatic control methods.[42,43]

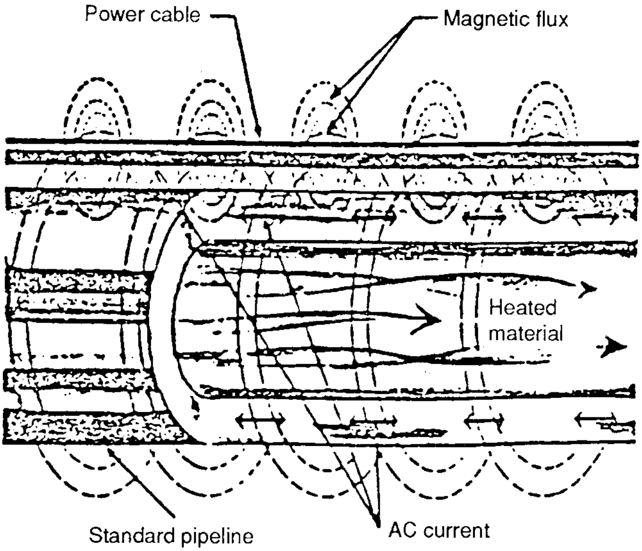

FIGURE B6.12 Components and electrical and magnetic interaction in impedance heat-tracing. (*George Koester, II, "Pipe Heat Tracing with Electric Impedance Heating,"* Plant Engineering, *vol. 32, no. 24, November 23, 1978, p. 113, Fig. 1.*)

Impedance tracing is costly and has limited application. Systems are almost exclusively vendor-designed, and the engineering can become complicated, especially in attempting to achieve an electrical balance in piping systems with multiple branches. Because significant current flows through the pipe, the entire pipeline must be electrically isolated from the support structure and shielded from personnel contact. As a precaution, impedance-traced pipelines are normally operated at 30 V or less.[44] Voltages at 80 V are allowed if ground fault protection is supplied.

INDUCTION HEATING

Induction heat-tracing uses a metallic pipeline as a heating element by placing it in the magnetic field of an alternating-current source. Low-resistance wire is wound around a conductive pipeline or vessel, and the alternating current flowing through the coils generates a rapidly changing magnetic field that induces eddy currents and hysteresis losses in the pipeline wall.[45] Induction heating has been most frequently employed for melting metals[46] and most likely would be considered for high-temperature, high-power heat-tracing applications. The absence of thermal resistance between heat source and pipeline allows very rapid heating. Present systems would involve considerable expense and custom design and would require power inputs at short intervals along the pipeline. Induction methods do not easily lend themselves to the production of uniform heating, and IEEE rates the method as providing only moderate system efficiency.[47]

SELECTION CRITERIA FOR TRACING SYSTEMS

Assuming that methods for avoiding the need for tracing have been considered and rejected, the first step in matching the heat-tracing to the piping system requires an analysis of fundamentals. These include the type of application, suitability and relative cost of different types of heat-tracing, availability of steam and/or electricity, amount of heat loss which must be made up, requirements for temperature control, and classification of the traced area as a hazardous or ordinary environment due to the presence of flammable substances.

AREA CLASSIFICATION

Areas are classified according to their potential fire hazard as defined by Articles 500 to 505 of the National Electrical Code (NEC).[48] [In industrial applications, verification that electric components meet NEC hazardous-area requirements is issued by a nationally recognized testing laboratory (NRTL).] Under this system, there are classified and unclassified (ordinary) areas. Hazardous areas have two different classification systems, the old class/division method and the new zone system. The zone system has been used in Europe for many years and is now being included in the International Electrotechnical Committee (IEC) specifications.

The old Class/Division system rates locations by class, division, and group. The area class determines the category of combustible atmosphere: flammable gases, vapors, or liquids (Class I); combustible dust (Class II); and combustible fibers (Class III). The division indicates the likelihood of a hazard to be present under different conditions. Hazardous atmospheres with similar combustion properties are listed in the same group.

To ensure that the heat-tracing system selected will operate safely in a hazardous environment, it must also be classified according to its NEC temperature identification number, or T rating.[49] The NEC specifies that the temperature of the exposed surface of the (electric) equipment not be in excess of 80 percent of the ignition temperature of the combustible atmosphere.

The Zone System offers more methods of protection of areas from both equipment failure and excessive temperatures. The T rating system is used, although there are not as many T ratings in the IEC system. The available ones, however, match those of the NEC exactly. The zone system has the possibility of being less expensive to install in some instances, and that is its attraction, especially on a worldwide design basis.

By comparing the *T* rating to the area classification, an assessment can be made as to heater eligibility for a particular piping system. See the later section ''Design Considerations'' for a further discussion of *T* ratings and sheath temperature calculations. For a more detailed explanation of classes and zones, see Ref. 59.

ENVIRONMENTAL CONSIDERATIONS

Environmental factors include whether the area is dry or wet, moderately or severely corrosive or noncorrosive, and whether the tracing will experience rough handling or mechanical abuse during installation, operation, or maintenance. These considerations are primarily related to the performance of electric heat tracers. Electric heaters exposed to any of the environmental stresses listed above must be protected accordingly: A metal sheath of a material is able to withstand the corrosive agent for MI cable; a braided sheath covered by a polymer jacket formulated for protection from particular classes of corrosives is required for polymer-insulated types of heating cables (jacket of modified polyolefin for resistance to moisture and inorganic chemical agents; fluoropolymer for resistance to organic chemicals). The heater must be rated to withstand anticipated maximum exposure temperatures.

HEATER RELIABILITY AND CONSEQUENCE OF FAILURE

In addition to selection of a system with the appropriate *T* rating, environmental protection, and proper installation, a heat-tracing system must be evaluated in terms of the risk and consequence of failure. Savings in front-end costs may not be justified if the failure of a tracing system incurs the far larger expense of disrupting a process which depends on maintaining an acceptable temperature in the traced piping or requires removal and replacement of the thermal insulation and tracing system.

Steam tracing systems have high maintenance costs, but system failure is generally not a concern. The major cause of electric tracing system failure is compromised insulation. Zone heaters and self-regulating heaters have parallel circuits. Failure of a single heating element does not bring down the entire system, and repairs can be made in the field. The series circuitry of MI and polymer-insulated cable allows no such flexibility. A single failure brings the entire system down. MI and polymer-insulated cable is difficult to field-repair, requiring the services of a trained technician. See the section ''Types of Heat-Tracing Systems'' for detailed characteristics of different heat-tracing systems.

TRACING OPTIONS FOR DIFFERENT TEMPERATURE RANGES

Table B6.1 classifies heat-tracing technologies according to operating temperature ranges and maximum exposure temperature.

TABLE B6.2 Selected Examples of Time versus Temperature Loss in an Insulated Pipe

Pipe fluid	Light fuel oil	Water
Analysis ambient temperature	Static aboveground 0°F (−18°C)	Static aboveground −20°F (−29°C)
Wind speed	20 mi/h (32.2 km/h)	20 mi/h (32.2 km/h)
Pipe	Carbon steel	Carbon steel
Nominal diameter	4 in (10 cm)	2 in (5 cm) and 0.5 in (1.25 cm)
Insulation type and thickness	Fiberglass 2 in (5 cm)	Fiberglass 1 in (2.5 cm)
Initial temperature	140°F (60°C)	50°F (10°C)
Final temperature	90°F (32°C)	32°F (0°C) frozen solid
Time to final temperature	7 h	21 h for 2 in, 4 h for 0.5 in

Note: In practice, an occasional short interruption of power will not be a serious concern in the selection of electric heat-tracing. Heat loss from a fluid-filled pipe is sufficiently slow that intermittent power outages are unlikely to cause a serious lowering of temperature.

Source: *Heat-Up/Cool Down Analysis Program*, Raychem Corp., Menlo Park, CA.

AVAILABILITY OF STEAM AND ELECTRICITY

In process plants, steam is almost universally available. And except in regions with substantially developed hydroelectric power, electricity is invariably generated from steam.

When one is considering the use of electric heat-tracing, especially in some developing countries, the reliability of the power for uninterrupted delivery, available voltages, and the consequences of outages must be evaluated. In practice, heat loss from a fluid-filled, insulated pipe is a rather slow process. It will take many times longer than the duration of an intermittent power outage to suffer a serious lowering of temperature.

For example, an aboveground NPS 2 (DN 50) in carbon-steel pipe with 1 in (25 mm) of fiberglass insulation containing static water at an initial temperature of 50°F (10°C) will take 21 h to freeze when the ambient temperature is −20°F (−29°C) (see Table B6.2). Unless power disruption is expected to be of long duration (an exceedingly rare occurrence), reliability of the power supply is not a determining consideration. One exception to this is the tracing of instrument lines. Because of their small size, instrument lines will freeze much more quickly. In the above example a 0.5-in instrument line would freeze solid in 4 h (see Table B6.2). While this is much quicker than a pipe, it is still generally less than the duration of the typical short-term power failure.

The most significant factor in a decision between steam and electric tracing is the cost of installing and operating the system, and these costs depend on factors such as the geometry of the piping system, cost of labor and energy, and local tracing practice.[50]

INSTALLED AND OPERATING COSTS

In general, installation of steam tracing is more labor-intensive (½-in copper tubing is more difficult to install than the more flexible electric cable). In high-labor-cost areas, such as Europe and North America, the expense of labor can easily offset the higher material cost of electric tracing. In areas where labor costs are considerably lower, steam may have an economic advantage. This is especially true in South America, where steam tracing predominates and the practice is well established.[52]

Since most electricity is produced from steam with about a 40 percent conversion efficiency, raw energy cost will always favor steam by a factor of 2 to 3. However, steam tracers have inherent disadvantages that usually make electric tracing more cost-effective in overall energy utilization. Maintenance costs also tend to favor electric tracing. As with installation, the maintenance cost differential between electric and steam tracing will tend to be greatest in high-priced labor markets.[53]

The above tradeoffs generally apply to both pipe tracing and the tracing of instrument lines. Because they are smaller, instrument lines require less energy, but this causes only a slight decrease in costs for both steam tracing and electric tracing. One major disadvantage steam tracing has in tracing instrument lines is that care must be taken to ensure that the steam tracer does not overheat the line. It is possible for a steam tracer to actually boil a small instrument line. This is generally not a concern with electric tracing as self-regulating heaters can be used.

TABLE B6.3 Comparison of Electric and Steam Tracing Freeze Protection Costs

Steam tracing		
Installed costs, $/ft of tracing		
Supply piping		$ 6.37
Steam tracer		9.32
Steam trap assemblies		20.33
Condensate return		5.33
Thermal insulation line	$18.65	
Thermal insulation, other	12.85	
Thermal insulation, total		31.50
Total steam tracing installation costs		$72.75
Operating costs, $/ft of tracing/yr		
Energy tracer		$1.85
Energy traps		3.33
Energy supply and return		0.76
Energy, total		5.94
Maintenance, total		1.46
Total steam tracing operating costs		$7.40
Electric tracing		
Installed costs, $/ft of tracing		
Heaters		$13.29
Motor control center		0.26
Panels		4.10
Control and distribution		13.53
Thermal insulation, total		19.58
Total cost of electric tracing		$50.76
Operating costs, $/ft of tracing/yr		
Energy, total		$0.11
Maintenance, total		1.32
Total operating cost of electric tracing		$1.43

Metric conversion: Multiply per-foot cost by 3.28 to obtain per-meter cost per year.

COMPUTER SELECTION PROGRAMS[54]

Computer programs now exist which can greatly simplify the work of determining the economics of steam versus electric heat-tracing. Many heat-tracing vendors provide user-friendly heat-tracing selection programs for use with their lines of products. Input involves supplying answers to a series of fill-in-the-blank questions covering size, diameter, and geometry of the piping to be traced; ambient and maintenance temperatures; control requirements; labor costs; and exchange rates. The program then calculates worst-case heat loss, determines the components needed to build a steam or electric tracing system to maintain the pipe at the required temperature, and calculates the associated material, installation, and operational costs for both cases.

TABLE B6.4 Comparison of Electric and Steam Tracing Process Maintenance Temperature Costs

Steam tracing		
Installed costs, $/ft of tracing		
Supply piping		$ 27.62
Steam tracer		9.30
Steam trap assemblies		79.38
Condensate return		24.98
Thermal insulation line	$17.72	
Thermal insulation, other	55.02	
Thermal insulation, total		72.74
Total steam tracing installation costs		$214.02
Operating costs, $/ft of tracing/yr		
Energy tracer		$ 3.64
Energy traps		11.02
Energy supply and return		2.12
Energy, total		$16.76
Maintenance, total		6.18
Total steam tracing operating costs		$22.96
Electric tracing		
Installed costs, $/ft of tracing		
Heaters		$30.75
Motor control center		0.44
Panels		6.65
Control and distribution		21.35
Thermal insulation, total		19.02
Total cost of electrical tracing		$78.21
Operating costs, $/ft of tracing/yr		
Energy total		$0.05
Maintenance total		1.73
Total operating cost of electrical tracing		$1.78

Metric conversion: Multiply per-foot cost by 3.28 to obtain per-meter cost per year.

Cost Comparison of Steam and Electric Tracing

In a study presented at a September 1990 meeting of the IEEE,[55] a major chemical company compared the installed and operating costs of both steam tracing and electric tracing for a freeze protection system and for a process temperature maintenance system.

An existing electric tracing system was used for the freeze protection analysis. The actual costs of installing and operating this system were compared with detailed engineering estimates of the costs of installing and operating a steam tracing system to do the same task. For the process temperature maintenance study, the costs of an existing steam tracing system were compared to detailed engineering estimates of the costs of a similar self-regulating electric tracing system.

The results of this study are summarized in Tables B6.3 and B6.4, and they demonstrate that the electric tracing system is less costly to install and operate. It is interesting to note that even if the higher energy costs for steam are disregarded, the steam systems still have higher operating costs due to the expensive maintenance required. This suggests that the availability of excess low-pressure steam is not necessarily an adequate justification to select a steam tracing system instead of an electric tracing system.

STEAM OR ELECTRIC TRACING: DESIGN CONSIDERATIONS

Figure B6.13 provides a flow diagram designed to assist in choosing between steam and electric tracing. In addition to the distinctions made in the first two sections

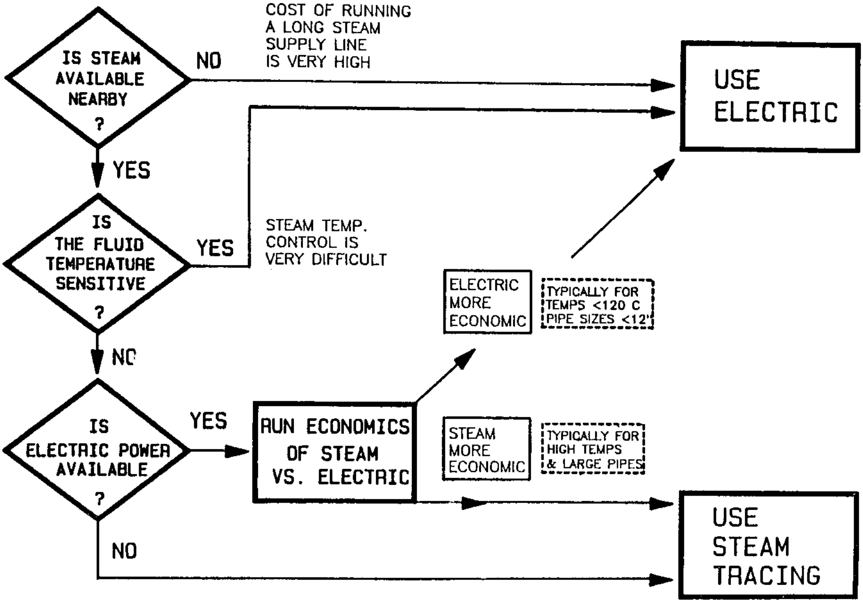
IS STEAM AVAILABLE NEARBY ?
NO
COST OF RUNNING A LONG STEAM SUPPLY LINE IS VERY HIGH
USE ELECTRIC
YES
IS THE FLUID TEMPERATURE SENSITIVE ?
YES
STEAM TEMP. CONTROL IS VERY DIFFICULT
ELECTRIC MORE ECONOMIC
TYPICALLY FOR TEMPS <120 C PIPE SIZES <12"
NO
IS ELECTRIC POWER AVAILABLE ?
YES
RUN ECONOMICS OF STEAM VS. ELECTRIC
STEAM MORE ECONOMIC
TYPICALLY FOR HIGH TEMPS & LARGE PIPES
NO
USE STEAM TRACING

FIGURE B6.13 Steam-electric selection flow diagram. (*Raychem Corp., Menlo Park, CA.*)

of this chapter, several factors must be considered in determining the type of tracing selected:

- If steam is not available in the vicinity of the pipe being traced, the prohibitive cost of running a long steam supply line to the site usually eliminates the use of steam tracing from further consideration. By the same token, electric power must be available at the site to use electric tracing. When neither steam nor electricity is available, it is usually much cheaper to run electricity than to bring a supply of steam to a remote location.[56]
- Economics usually favor electric tracing for lines smaller than NPS 12 (DN 300) that maintain temperatures below 248°F (120°C).

ELECTRIC SYSTEM DESIGN

Electric heat-tracing is usually marketed through manufacturers' representatives. Major manufacturers of heat-tracing have representatives throughout North America and in many other parts of the world, and most are capable of designing heat-tracing systems and training plant engineers to design their own systems. Many heat-tracing manufacturers are staffed by professionals who are extremely knowledgeable in heat-tracing practice. Purchasers of heat-tracing products and systems can and often do take advantage of the design expertise and related experience that these companies make available to their customers.

Computer programs which assist in the development of heat-tracing designs are available from several manufacturers of heat-tracing products. Computer design programs allow for the rapid and comprehensive evaluation of the changes in heat loss resulting from the alteration of system variables. The ease of performing multiple computer evaluations allows more extensive exploration in design optimization, and often leads to improvements which might not be accessible if these computations had to be carried out in a less automated fashion. See Tables B6.5 and B6.6.

The following example demonstrates how a program is used in developing a heat-tracing design. In addition to calculating heat loss, these programs provide a checklist of the information required.

Data Collection

Once the information has been entered, the program will use the data to automatically select the optimum system components. While not all the requested information is always required, the use of a comprehensive inquiry form or a computer program helps ensure that all relevant data are collected.

1. Thermal Data. Temperature at which the pipe is to be maintained:

$$T_m = 40^\circ\text{F} \quad (5^\circ\text{C})$$

Minimum expected ambient temperature:

$$T_a = 0^\circ\text{F} \quad (-18^\circ\text{C})$$

TABLE B6.5a Input Menu Screen Display for the Computer Program (Metric Unit Support Available in Other Unit of Measure Menu)

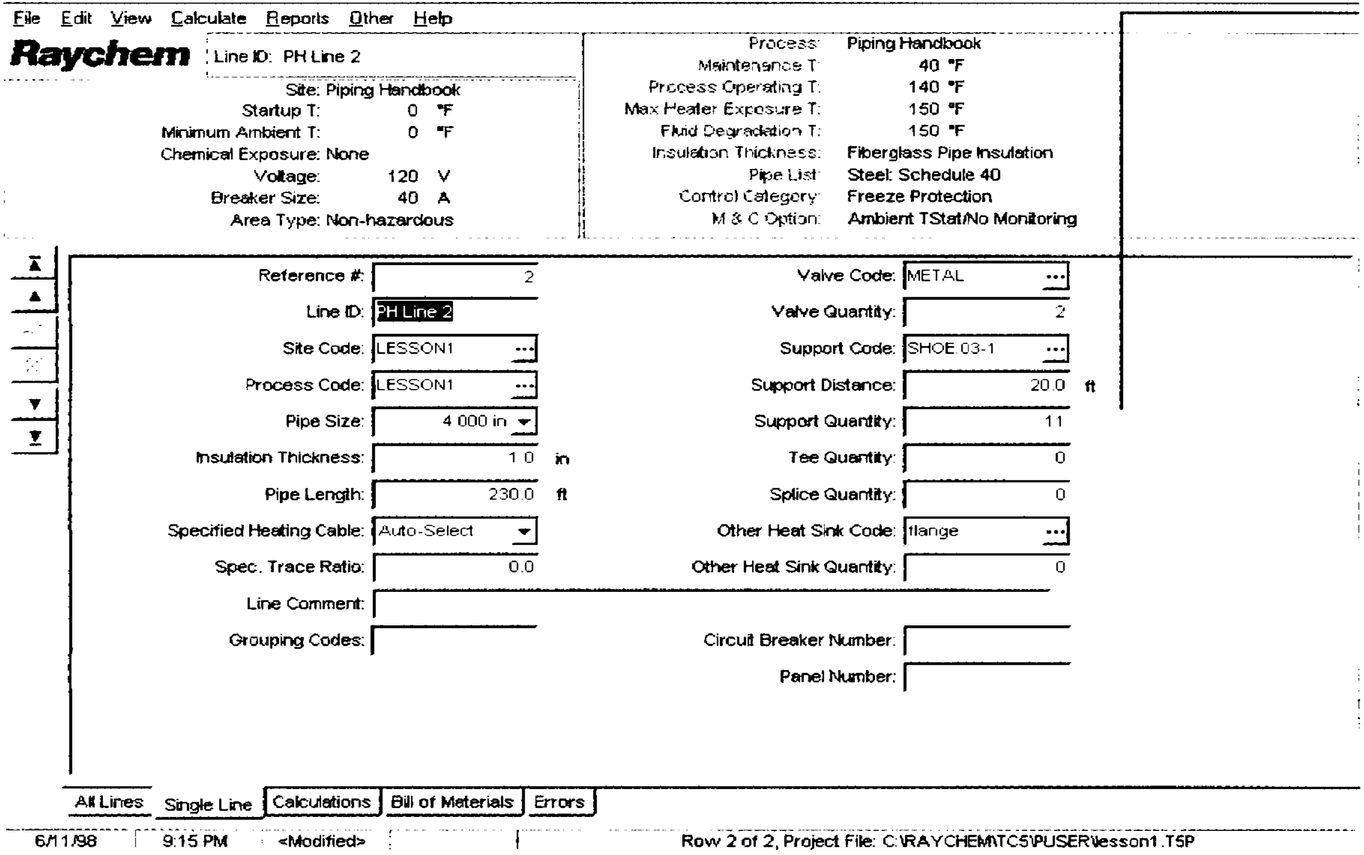

Line ID: PH Line 2

Site: Piping Handbook
Startup T: 0 °F
Minimum Ambient T: 0 °F
Chemical Exposure: None
Voltage: 120 V
Breaker Size: 40 A
Area Type: Non-hazardous

Process: Piping Handbook
Maintenance T: 40 °F
Process Operating T: 140 °F
Max Heater Exposure T: 150 °F
Fluid Degradation T: 150 °F
Insulation Thickness: Fiberglass Pipe Insulation
Pipe List: Steel: Schedule 40
Control Category: Freeze Protection
M & C Option: Ambient TStat/No Monitoring

Reference #: 2
Line ID: PH Line 2
Site Code: LESSON1
Process Code: LESSON1
Pipe Size: 4.000 in
Insulation Thickness: 1.0 in
Pipe Length: 230.0 ft
Specified Heating Cable: Auto-Select
Spec. Trace Ratio: 0.0
Line Comment:
Grouping Codes:

Valve Code: METAL
Valve Quantity: 2
Support Code: SHOE.03-1
Support Distance: 20.0 ft
Support Quantity: 11
Tee Quantity: 0
Splice Quantity: 0
Other Heat Sink Code: flange
Other Heat Sink Quantity: 0
Circuit Breaker Number:
Panel Number:

6/11/98 9:15 PM <Modified> Row 2 of 2, Project File: C:\RAYCHEM\TC5\PUSER\lesson1.T5P

Source: *TraceCalc 5 Plus, Raychem Corporation, Menlo Park, CA, ©1998.*

TABLE B6.5b Input Menu Screen for Data Organization under SITE and PROCESS Program (Metric Unit Support Available in Other Unit of Measure Menu)

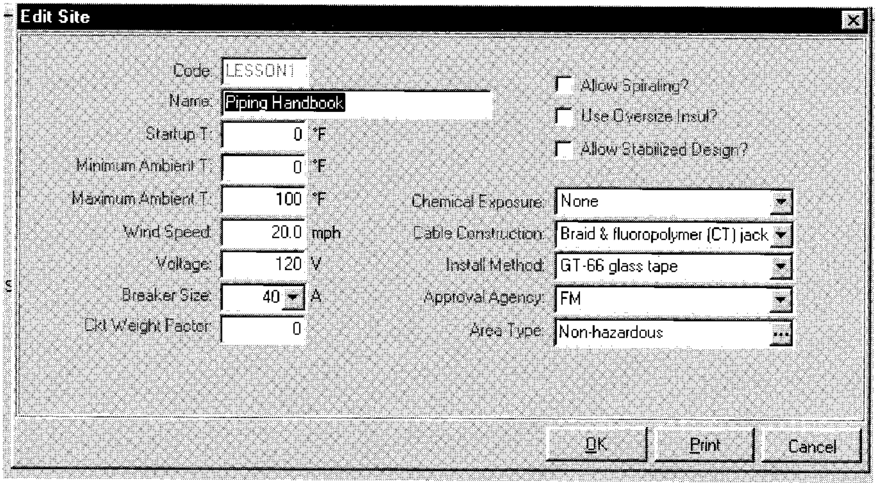

Code: LESSON1
Name: Piping Handbook
Startup T: 0 °F
Minimum Ambient T: 0 °F
Maximum Ambient T: 100 °F
Wind Speed: 20.0 mph
Voltage: 120 V
Breaker Size: 40 A
Ckt Weight Factor: 0

☐ Allow Spiraling?
☐ Use Oversize Insul?
☐ Allow Stabilized Design?

Chemical Exposure: None
Cable Construction: Braid & fluoropolymer (CT) jack
Install Method: GT-66 glass tape
Approval Agency: FM
Area Type: Non-hazardous

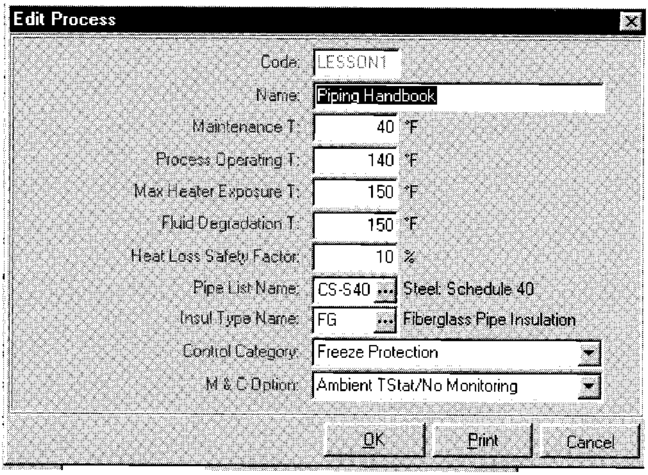

Code: LESSON1
Name: Piping Handbook
Maintenance T: 40 °F
Process Operating T: 140 °F
Max Heater Exposure T: 150 °F
Fluid Degradation T: 150 °F
Heat Loss Safety Factor: 10 %
Pipe List Name: CS-S40 Steel: Schedule 40
Insul Type Name: FG Fiberglass Pipe Insulation
Control Category: Freeze Protection
M & C Option: Ambient TStat/No Monitoring

Source: *TraceCalc 5 Plus, Raychem Corporation, Menlo Park, CA, ©1998.*

Comment. Both T_m and T_a are needed to calculate the heat loss.

Maximum temperature that the heater will be exposed to due to process upsets or steam cleaning:

$$T_e = 140°\text{F} \quad (60°\text{C})$$

TABLE B6.6 Calculated Results for Data Input (Metric Unit Support Available in Other Unit of Measure Menu)

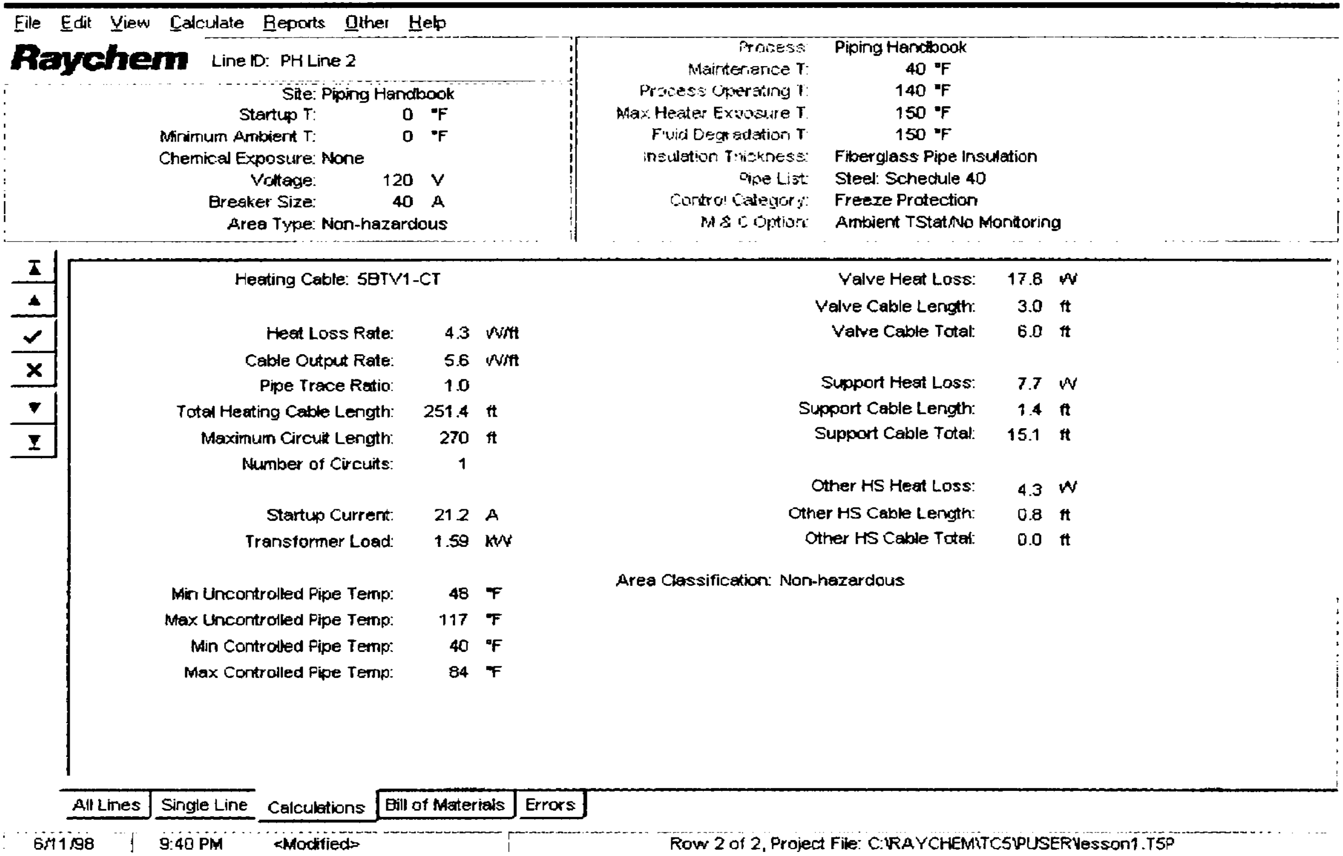

Line ID: PH Line 2

Site: Piping Handbook
Startup T: 0 °F
Minimum Ambient T: 0 °F
Chemical Exposure: None
Voltage: 120 V
Breaker Size: 40 A
Area Type: Non-hazardous

Process: Piping Handbook
Maintenance T: 40 °F
Process Operating T: 140 °F
Max Heater Exposure T: 150 °F
Fluid Degradation T: 150 °F
Insulation Thickness: Fiberglass Pipe Insulation
Pipe List: Steel: Schedule 40
Control Category: Freeze Protection
M & C Option: Ambient TStat/No Monitoring

Heating Cable: 5BTV1-CT

Heat Loss Rate: 4.3 W/ft
Cable Output Rate: 5.6 W/ft
Pipe Trace Ratio: 1.0
Total Heating Cable Length: 251.4 ft
Maximum Circuit Length: 270 ft
Number of Circuits: 1

Startup Current: 21.2 A
Transformer Load: 1.59 kW

Min Uncontrolled Pipe Temp: 48 °F
Max Uncontrolled Pipe Temp: 117 °F
Min Controlled Pipe Temp: 40 °F
Max Controlled Pipe Temp: 84 °F

Valve Heat Loss: 17.8 W
Valve Cable Length: 3.0 ft
Valve Cable Total: 6.0 ft

Support Heat Loss: 7.7 W
Support Cable Length: 1.4 ft
Support Cable Total: 15.1 ft

Other HS Heat Loss: 4.3 W
Other HS Cable Length: 0.8 ft
Other HS Cable Total: 0.0 ft

Area Classification: Non-hazardous

6/11/98 9:40 PM <Modified> Row 2 of 2, Project File: C:\RAYCHEM\TC5\PUSER\lesson1.T5P

Source: *TraceCalc 5 Plus, Raychem Corporation, Menlo Park, CA, ©1998.*

TABLE B6.6 Bill of Materials for Example Input (Metric Unit Support Available in Other Unit of Measure Menu) (*Continued*)

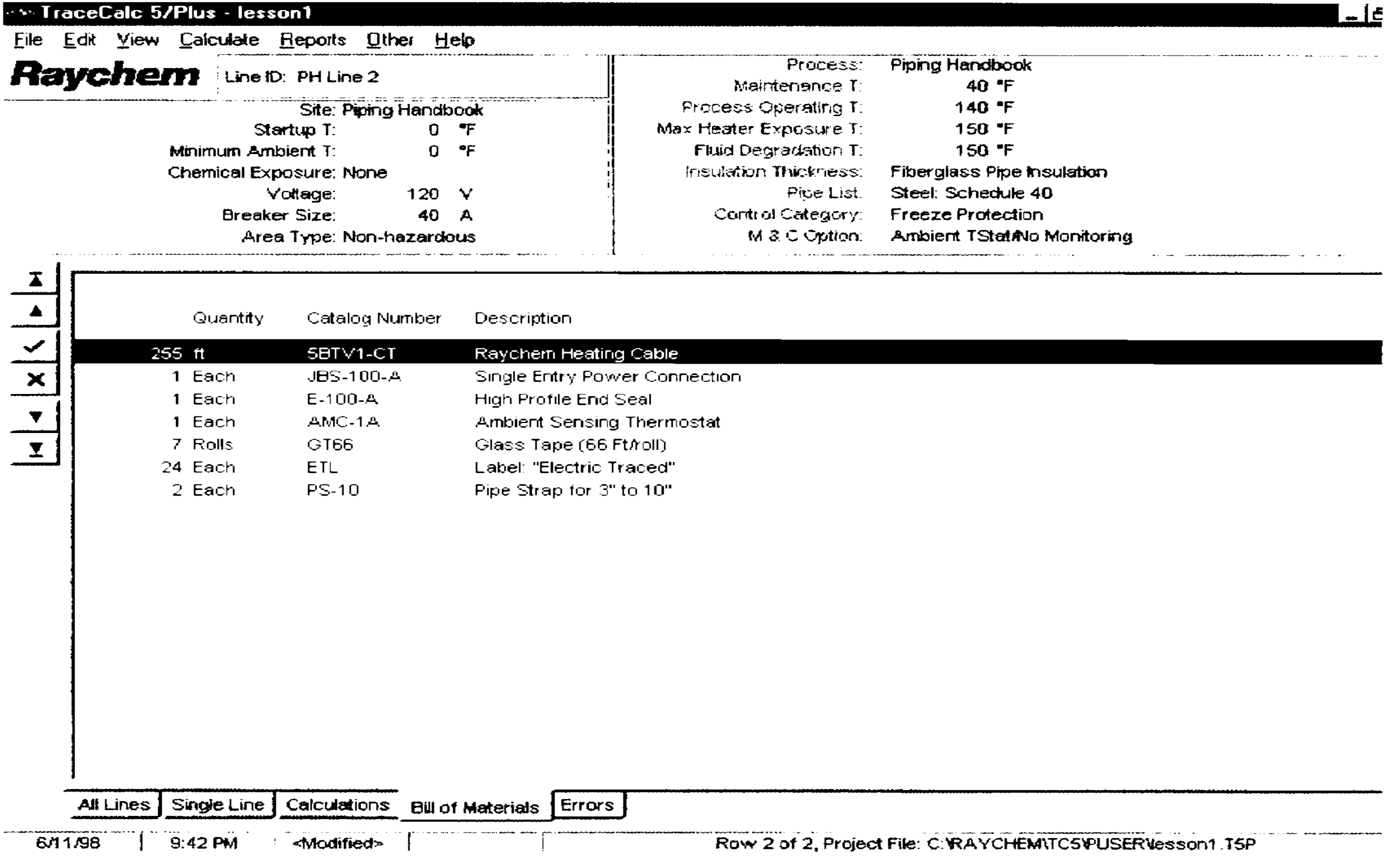
TraceCalc 5/Plus - lesson1
File
Edit
View
Calculate
Reports
Other
Help
Raychem
All Lines
Single Line
Calculations
Bill of Materials
Errors

Line ID: PH Line 2
Site: Piping Handbook
Startup T: 0 °F
Minimum Ambient T: 0 °F
Chemical Exposure: None
Voltage: 120 V
Breaker Size: 40 A
Area Type: Non-hazardous

Process: Piping Handbook
Maintenance T: 40 °F
Process Operating T: 140 °F
Max Heater Exposure T: 150 °F
Fluid Degradation T: 150 °F
Insulation Thickness: Fiberglass Pipe Insulation
Pipe List: Steel: Schedule 40
Control Category: Freeze Protection
M & C Option: Ambient TStat/No Monitoring

Quantity		Catalog Number	Description
255	ft	SBTV1-CT	Raychem Heating Cable
1	Each	JBS-100-A	Single Entry Power Connection
1	Each	E-100-A	High Profile End Seal
1	Each	AMC-1A	Ambient Sensing Thermostat
7	Rolls	GT66	Glass Tape (66 Ft/roll)
24	Each	ETL	Label: "Electric Traced"
2	Each	PS-10	Pipe Strap for 3" to 10"

6/11/98 | 9:42 PM | <Modified> | Row 2 of 2, Project File: C:\RAYCHEM\TC5\PUSER\lesson1.TSP

Source: *TraceCalc 5 Plus, Raychem Corporation, Menlo Park, CA, ©1998.*

Comment. The design calculation compares T_e with the maximum intermittent exposure temperature of the heater to ensure that adequate safeguards are built in to protect the heater from damage and subsequent failure. This is a serious concern in the case of heat-sensitive polymer-insulated heaters.

Process normal operating temperature:

$$T_p = 50^\circ\text{F} \quad (10^\circ\text{C})$$

Comment. This temperature is required to ensure that the heater selected can continuously withstand the operating temperature.

System limit temperature (imposed by process fluid, insulation, pipe material, or safety considerations):

$$T_l = 500^\circ\text{F} \quad (260^\circ\text{C})$$

Comment. This temperature is required to protect the rest of the system from high temperatures created by the heater. Such temperatures may be a concern where plastic pipes or temperature-sensitive fluids are to be traced. (Most heat-traced fluids are not temperature-sensitive and are transferred in steel pipe, so this variable is often of no concern in design considerations.)

2. Pipe Data and Insulation Data

Outside pipe diameter:

$$D_1 = 4 \text{ in}$$

Comment. Tables and programs are based on nominal pipe size; actual diameter is required for use in the heat-loss equation.

Outside diameter of insulated pipe:

$$D_2 = 6 \text{ in}$$

Comment. Tables and programs are based on insulation thickness equal to $(D_2 - D_1)/2$ and thermal conductivity k of the insulation material or type.

$$\text{FG} = \text{fiberglass}$$

The following values are needed to calculate the pipe heat loss: D_1, D_2, and k [$= 0.25 \text{ Btu}/(\text{h} \cdot {}^\circ\text{F} \cdot \text{ft}^2/\text{in})$].

The values of k are taken at the mean temperature between the inner and outer surfaces of the insulation. Note that the thermal conductivity of the insulation material varies with the mean temperature.

Comment. Computer programs calculate the heat loss based on the insulation type. The thermal conductivity is estimated for a mean insulation temperature; k is temperature-dependent, although the variation is small for low and moderate temperatures. Changes in k should be considered for medium- and high-temperature applications.

Pipe length:

$$L_p = 230 \text{ ft } (70 \text{ m})$$

Comment. This value is needed to estimate the length of tracing cable required.

Valves and other heat sinks: Include type and number of flanges, valves, hangers, fittings shoes, and anything that could require additional heat-tracing.

3. Service Environment Data and Classification.[57] Areas are classified on the basis of the severity of the fire and/or explosion hazard, which may be present. It is essential that the heater selected be used only in areas with classifications for which it has been approved.

Standard Area Classification

- *Ordinary area (nonhazardous)*: Areas not having explosive vapors, dust, or fibers.
- *Class I, II, III, Division 2*: Areas where explosive concentrations of vapors, dust, or fibers may be present in unusual circumstances. Special heat-tracing strip, usually equipped with a metal braid and an outer jacket, is used in these areas.
- *Class I, II, III, Division 1*: Areas where explosive concentrations of vapors, dust, or fibers may be present in usual circumstances. Measures considerably more stringent than those taken for Division 2 are required in Division 1.
- The computation example is for a Class 1, Division 2 area, a classification that is typical for the vast majority of hazardous-area designations.

Chemical Exposure

- Dry location (indoors)
- Wet location or limited exposure to aqueous inorganic chemicals
- Exposure to organic chemicals, greases, oils, or solvents

(Some types of heat-tracing can withstand corrosive inorganic chemicals, but not organics.)

Most heaters are designed for use in wet environments. Some heaters will need additional outer jackets if they are to be exposed to organic compounds.[58] The computation example is for an outdoor environment with potential exposure to organic chemicals.

4. Available Voltage. Heaters generally operate on 120 or 240 V. Most 240-V heaters are designed to operate at voltages from 208 to 277 V with some variations in power output. Generally 240-V heaters are preferred in industrial installations because they can support circuit lengths approximately twice as long as 120-V heaters can. This allows most jobs to be done with fewer circuits, considerably lowering the overall cost. Both 120- and 240-V systems are available in the computation example.

Heat Loss

The next step in the design of electric heat-tracing is the calculation of the maximum heat loss from the pipe. This is the heat loss from the pipe when the pipe is at its design temperature (maintain temperature), the ambient temperature is at its lowest, and the wind is blowing (comparable to the coldest day of the year with a maximum wind chill). Under these worst-case conditions, the heater must be capable of replacing the heat loss in order to maintain the desired temperature.

In the majority of cases, heat loss in electric tracing applications is usually estimated from tables provided by tracing manufacturers or by means of computer programs. Table B6.7 is a typical heat-loss table from a heat-tracing manufacturer. Several things should be noted about this table:

- It is based on fiberglass insulation. Correction factors for other types of insulation are given in the lower left-hand corner.
- A 10 percent safety factor has been included. This is fairly standard practice in the industry.
- The table is based on a 20-mi/h (36-km/h) wind. In the absence of wind (indoors), the heat loss will be reduced by about 10 percent. Wind speeds above 20 mi/h (36 km/h) will have very little additional effect on the total heat loss, generally less than 1 percent when one is dealing with an insulated pipe. Although the resistance of the air film can change, the total resistance—insulation plus air film—will not be altered significantly since most of that resistance is provided by the insulation.
- The amount of additional heat-tracing needed for valves is indicated in the Valve Heat-Loss Factors table in the lower right-hand corner of Table B6.7. Several additional feet of tracing will be needed for each controller in an insulated enclosure.

The heat loss per foot of pipe is calculated from Table B6.7 by following the procedure indicated in the thermal design guide chart (Fig. B6.14) as follows:

- First, move across the top to locate the 4-in-pipe column.
- Next, moving down the column, stop at the row corresponding to 1 in of insulation (left vertical axis).
- Following the calculation instruction method, a temperature differential $T_m - T_a$ of 50°F yields a heat loss of 5.4 W/ft.
- Since the actual temperature differential is 40°F or 5°C (40°F or 5°C maintain, 0°F or −18°C minimum ambient), interpolation is required, and the final result is 5.4 W/ft × 40/50 = 4.3 W/ft.

This, then, is the heat loss; including a 10 percent safety factor, of the pipe with the ambient temperature at 0°F, the pipe at 40°F (5°C), and the wind blowing 20 mi/h (32 km/h). The heater selected must be able to provide at least this much heat at a pipe temperature of 40°F (5°C).

The equation used to calculate heat loss from IEEE Standard 515–1983 is[59]:

$$q = \frac{T_m - T_a}{R_0 + R_1 + R_i + R_{co}} \tag{B6.1}$$

where q = heat loss per unit length of pipe at minimum ambient temperature, Btu/(h · ft)
T_m = pipe maintenance temperature, 40°F (5°C)
T_a = minimum ambient temperature, 0°F (−18°C)
R_0 = resistance to heat flow due to air film around outside insulation surface
R_1 = resistance of insulation to heat flow
R_i = resistance of inside air film between pipe and insulation
R_{co} = resistance to heat flow from fluid film on inner wall of pipe

Heater Cable Selection

After the data are collected, the procedure for selecting heating cables is as follows:

1. Select the heater family to be used based on the ''maintain'' and exposure temperatures. Table B6.8 shows the temperature ratings for a series of commercial heaters. Based on a maintenance temperature T_m of 40°F (5°C) and an exposure temperature T_e of 140°F (60°C), the economical choice is the heater family with lowest output capable of sustaining the required maintain temperature requirement and capable of withstanding the maximum intermittent exposure temperature.

Choice: Heater family with T_m = 150°F (66°C), T_e = 185°F (85°C) (B family).

2. Select the power output of the heater based on the heat loss and the desired maintain temperature. In the example computation, a power output of at least 4.3 W/ft at 40°F (5°C) is required. [Both the power output and the maintain temperature must be specified in order to select the correct heater. A power output of 4.3 W/ft, for example, at 140°F (60°C) instead of 40°F (5°C), would lead to the selection of an entirely different heater finally.] Figure B6.15 gives the power outputs for various families of heaters. Once again, the most economical selection is the heater with the minimum power output needed to make up the heat loss at a specified T_m of 40°F (5°C):

Choice: Heater with power output of 5.7 W/ft at 40°F (5°C). [Output specification is based on 1 ft (0.3 m) of heater per 1 ft (0.3 m) of pipe.]

In view of the heat replacement requirement, an alternate design solution could have employed a lower-cost heater with an output of only 3.5 W/ft in a spiral configuration of 1.23 ft (0.4 m) of heater per 1 ft (0.3 m) of pipe. The accepted practice of most experienced users in North America is to avoid spiraling.

Spiraling increases installation costs and time, and in many cases it also increases material costs. For example, analysis of the selection options above demonstrates that although the cost per foot of the 4.3 W/ft heater is about 10 percent greater than that of the 3.5 W/ft heater, the spiraling requirement increases the overall material cost of the latter by 23 percent. This comparison does not include the additional cost of labor required for a spiral installation. In areas with very low labor costs, the economics of spiraling can be more attractive. Spiraling is most often employed in high-heat-loss configurations where the alternative is the use of multiple strips to generate adequate heat.

In the event that a selection outcome indicates the need for more than one heater, it may be appropriate to review the heater family chosen. For example, while a heater output of 4.3 W/ft at 140°F (60°C) would require three strips of the heater selection E in Fig. B6.15, that same heat replacement could be more economically supplied by a single heater strip from selection D.

3. Select the voltage classification. The 240-V heaters have circuit lengths approximately twice as long as those of the 120-V heaters. Minimizing the number of circuits is one of the most effective ways to reduce the costs of an electric heat-tracing system.

Choice: 240-V heater.

Most 240-V heaters can be used at voltages ranging from 208 to 277 V, with some power adjustment factors (see Table B6.9).

For self-regulating heaters, it is important to obtain the power adjustment factor

TABLE B6.7 Pipe Heat-Loss Table

		Nominal pipe size (NPS)							
		¼	½	¾	1	1¼	1½	2	2½
			Tubing size (in)						
Insulation thickness (in)	ΔT (°F)		¾	1	1¼	1½	2		
0.5	50	1.9	2.5	2.9	3.5	4.1	4.6	5.5	6.5
	100	3.9	5.2	6.1	7.2	8.6	9.6	11.5	13.5
	150	6.1	8.1	9.5	11.2	13.4	14.9	17.9	21.1
	200	8.5	11.3	13.2	15.6	18.6	20.7	24.9	29.2
1.0	50	1.3	1.6	1.9	2.2	2.5	2.8	3.2	3.8
	100	2.7	3.4	3.9	4.5	5.2	5.8	6.8	7.8
	150	4.2	5.3	6.1	7.0	8.2	9.0	10.6	12.2
	200	5.8	7.4	8.4	9.7	11.3	12.4	14.6	16.9
	250	7.6	9.7	11.0	12.7	14.8	16.3	19.1	22.1
1.5	50	1.1	1.3	1.5	1.7	1.9	2.1	2.4	2.8
	100	2.2	2.8	3.1	3.5	4.0	4.4	5.1	5.8
	150	3.5	4.3	4.8	5.5	6.3	6.9	8.0	9.1
	200	4.8	5.9	6.7	7.6	8.7	9.5	11.0	12.6
	250	6.3	7.8	8.7	9.9	11.4	12.4	14.4	16.5
	300	7.9	9.7	11.0	12.4	14.3	15.6	18.1	20.6
	350	9.6	11.9	13.3	15.1	17.4	19.0	22.0	25.1
2.0	50	0.9	1.1	1.3	1.4	1.6	1.8	2.0	2.3
	100	2.0	2.4	2.7	3.0	3.4	3.7	4.2	4.8
	150	3.1	3.7	4.2	4.7	5.3	5.8	6.6	7.5
	200	4.3	5.2	5.8	6.5	7.4	8.0	9.2	10.4
	250	5.6	6.8	7.5	8.5	9.6	10.4	12.0	13.5
	300	7.0	8.5	9.4	10.6	12.1	13.1	15.0	17.0
	350	8.5	10.3	11.5	12.9	14.7	15.9	18.2	20.6
2.5	50	0.9	1.0	1.2	1.3	1.4	1.6	1.8	2.0
	100	1.8	2.2	2.4	2.7	3.0	3.3	3.7	4.2
	150	2.8	3.4	3.7	4.2	4.7	5.1	5.8	6.5
	200	3.9	4.7	5.2	5.8	6.5	7.0	8.0	9.0
	250	5.1	6.1	6.8	7.6	8.5	9.2	10.5	11.7
	300	6.4	7.7	8.5	9.5	10.7	11.5	13.1	14.7
	350	7.8	9.3	10.3	11.5	13.0	14.0	15.9	17.9
3.0	50	0.8	1.0	1.1	1.2	1.3	1.4	1.6	1.8
	100	1.7	2.0	2.2	2.4	2.7	2.9	3.3	3.7
	150	2.6	3.1	3.4	3.8	4.3	4.6	5.2	5.8
	200	3.6	4.3	4.8	5.3	5.9	6.4	7.2	8.0
	250	4.8	5.7	6.2	6.9	7.8	8.3	9.4	10.5
	300	6.0	7.1	7.8	8.7	9.7	10.4	11.8	13.2
	350	7.3	8.6	9.5	10.5	11.8	12.7	14.3	16.0
4.0	50	0.7	0.9	0.9	1.0	1.1	1.2	1.4	1.5
	100	1.5	1.8	2.0	2.1	2.4	2.5	2.9	3.2
	150	2.4	2.8	3.0	3.4	3.7	4.0	4.4	4.9
	200	3.3	3.9	4.2	4.6	5.2	5.5	6.2	6.8
	250	4.3	5.1	5.5	6.1	6.7	7.2	8.1	8.9
	300	5.4	6.3	6.9	7.6	8.5	9.0	10.1	11.2
	350	6.6	7.7	8.4	9.3	10.3	11.0	12.3	13.6

Insulation factors		
Preformed pipe insulation	Insulation factor (f)	Based on K factor @ 50°F mean temp (Btu/h · °F · ft²/in)
Glass fiber (ASTM C547)	1.00	.25
Calcium silicate (ASTM C533)	1.50	.375
Cellular glass (ASTM C552)	1.60	.40
Rigid cellular urethane (ASTM C591)	0.66	.165
Foamed elastomer (ASTM C534)	1.16	.29
Mineral fiber blanket (ASTM C553)	1.20	.30
Expanded perlite (ASTM C610)	1.50	.375

TABLE B6.7 Pipe Heat-Loss Table (*Continued*)

Nominal pipe size (NPS)											
3	3½	4	6	8	10	12	14	16	18	20	24
7.7	8.6	9.6	13.6	17.4	21.4	25.2	27.5	31.3	35.0	38.8	46.2
16.0	18.0	20.0	28.4	36.3	44.6	52.5	57.4	65.2	73.0	80.8	96.3
25.0	28.1	31.2	44.3	56.6	69.6	81.9	89.5	101.7	113.8	126.0	150.2
34.6	39.0	43.3	61.5	78.6	96.6	113.6	124.2	141.1	158.0	174.8	208.5
4.4	4.9	5.4	7.5	9.4	11.5	13.5	14.7	16.6	18.6	20.5	24.4
9.1	10.2	11.2	15.6	19.7	24.0	28.1	30.6	34.7	38.7	42.8	50.9
14.2	15.9	17.5	24.3	30.7	37.4	43.8	47.8	54.1	60.4	66.7	79.4
19.7	22.0	24.2	33.7	42.5	51.9	60.7	66.2	75.0	83.8	92.5	110.0
25.8	28.7	31.7	44.0	55.6	67.9	79.4	86.6	98.1	109.6	121.0	143.9
3.2	3.6	3.9	5.3	6.7	8.1	9.4	10.2	11.5	12.9	14.2	16.8
6.7	7.4	8.1	11.1	13.9	16.8	19.6	21.3	24.0	26.8	29.5	35.0
10.5	11.6	12.7	17.3	21.6	26.2	30.5	33.2	37.5	41.8	46.1	54.6
14.5	16.1	17.6	24.0	30.0	36.3	42.3	46.0	52.0	57.9	63.8	75.7
19.0	21.0	23.0	31.4	39.2	47.5	55.3	60.2	68.0	75.7	83.5	99.0
23.8	26.3	28.8	39.3	49.2	59.6	69.3	75.4	85.1	94.9	104.6	124.0
28.9	32.0	35.0	47.8	59.8	72.4	84.3	91.7	103.5	115.4	127.2	150.8
2.6	2.9	3.1	4.2	5.2	6.3	7.3	7.9	8.9	9.9	10.9	12.9
5.5	6.0	6.6	8.8	10.9	13.1	15.2	16.5	18.6	20.7	22.8	26.9
8.5	9.4	10.2	13.8	17.0	20.5	23.8	25.8	29.0	32.3	35.5	42.0
11.8	13.0	14.2	19.1	23.6	28.4	32.9	35.7	40.2	44.7	49.2	58.2
15.5	17.0	18.5	24.9	30.9	37.2	43.1	46.7	52.6	58.5	64.3	76.1
19.4	21.3	23.2	31.2	38.7	46.6	54.0	58.6	65.9	73.3	80.6	95.3
23.6	25.9	28.3	38.0	47.1	56.6	65.6	71.2	80.2	89.1	98.1	115.9
2.3	2.5	2.7	3.6	4.4	5.2	6.1	6.6	7.4	8.2	9.0	10.6
4.7	5.2	5.6	7.4	9.1	10.9	12.6	13.7	15.3	17.0	18.7	22.0
7.4	8.1	8.7	11.6	14.2	17.0	19.7	21.3	23.9	26.5	29.1	34.3
10.2	11.2	12.1	16.1	19.7	23.6	27.2	29.5	33.1	36.7	40.3	47.5
13.3	14.6	15.8	21.0	25.8	30.9	35.6	38.6	43.3	48.0	52.8	62.2
16.7	18.3	19.8	26.3	32.3	38.7	44.6	48.4	54.3	60.2	66.1	77.9
20.3	22.2	24.1	32.0	39.3	47.1	54.3	58.8	66.0	73.2	80.4	94.7
2.0	2.2	2.4	3.1	3.8	4.5	5.2	5.6	6.3	7.0	7.6	9.0
4.2	4.6	4.9	6.5	7.9	9.4	10.8	11.7	13.1	14.5	15.9	18.7
6.6	7.1	7.7	10.1	12.4	14.7	16.9	18.3	20.5	22.6	24.8	29.2
9.1	9.9	10.7	14.0	17.1	20.4	23.4	25.3	28.3	31.4	34.4	40.4
11.9	12.9	14.0	18.3	22.4	26.6	30.6	33.1	37.1	41.0	45.0	52.8
14.9	16.2	17.5	23.0	28.1	33.4	38.4	41.5	46.5	51.4	56.3	66.2
18.1	19.7	21.3	28.0	34.1	40.6	46.7	50.5	56.5	62.5	68.5	80.5
1.7	1.8	2.0	2.5	3.1	3.6	4.1	4.4	5.0	5.5	6.0	7.0
3.5	3.8	4.1	5.3	6.4	7.5	8.6	9.3	10.3	11.4	12.4	14.5
5.5	6.0	6.4	8.3	10.0	11.8	13.4	14.5	16.1	17.8	19.4	22.7
7.6	8.3	8.9	11.4	13.8	16.3	18.6	20.0	22.3	24.6	26.9	31.4
10.0	10.8	11.6	15.0	18.1	21.3	24.3	26.2	29.2	32.2	35.2	41.1
12.5	13.5	14.6	18.8	22.6	26.7	30.5	32.8	36.6	40.3	44.1	51.5
15.2	16.5	17.7	22.8	27.5	32.4	37.1	39.9	44.5	49.0	53.6	62.6

Valve heat-loss factors

Valve type	Heat-loss factor
Gate	4.3
Butterfly	2.3
Ball	2.6
Globe	3.9

Example:
Heat loss for a 2-in gate valve is 4.3 times the heat loss for 1 ft of pipe of the same size and insulation.

Pipe heat loss (Q_B) is shown in watts per foot. Heat-loss calculations are based on IEEE Std. 515—1983, Equation 1, with the following provisions: pipes insulated with glass fiber in accordance with ASTM C547; pipes located outdoors in a 20-mph wind; no insulating air-space assumed between pipe and insulation; no insulating air-space assumed between the insulation and outer cladding. A 10% safety factor has been included.

Source: Chemelex Auto-Trace Design Guide, *Raychem Corp., Chemelex Division, Menlo Park, CA., 1988, pp. 8–9.*

To calculate the heat loss that must be replaced by the heating cable, you need to know:

- ▶ T_M Desired maintenance temperature (°F)
- ▶ T_A Minimum expected ambient temperature (°F)
- ▶ T_E Maximum intermittent exposure temperature (°F)
- ▶ Pipe or tubing size
- ▶ Thermal insulation type and thickness

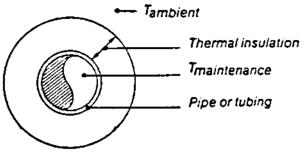

Example:
T_M: 50°F
T_A: −20°F
T_E: 366°F (150 psig steam cleaning)
Pipe size: 6″ steel
Insulation: 2″ calcium silicate

STEP 1

Calculate temperature differential.
$\Delta T = T_M - T_A$

Calculate $\Delta T = T_M - T_A$
$= 50°F - (-20°F)$
$\Delta T = 70°F.$

STEP 2

Determine pipe heat loss.
From Table B6.7 (next page), match the pipe size and insulation thickness with the temperature differential (ΔT) to find the base heat loss of the pipe (Q_B).

Note:
Heat-loss calculations are based on IEEE Std. 515-1983, Equation 1.

From Table B6.7, 6″ pipe, 2″ insulation and ΔT=70°F, Q_B must be calculated through interpolation:

$Q_B = 4.2$ w/ft $+ 20/50 \times (8.8 - 4.2)$
$= 4.2 + 1.8$

$Q_B = 6.0$ w/ft. @ $T_M = 50$°F

STEP 3

Compensate for insulation type.
Multiply the base heat loss of the pipe (Q_B) from Step 2 by the insulation compensation factor (f) from Table B6.7 to get the actual heat loss (Q_T).

$Q_T = Q_B \times f$

From Table B6.7, f = 1.50 for calcium silicate:

$Q_T = Q_B \times f$
$= 6.0$ w/ft. $\times 1.50$

$Q_T = 9.0$ w/ft. @ 50°F

FIGURE B6.14 Thermal design chart. (Chemelex Auto-Trace Design Guide, *Raychem Corp., Chemelex Division, Menlo Park, CA., 1988, p. 7.*)

TABLE B6.8 Heater Cable Temperature Ratings

Family	Maximum maintenance temperature T_m	Maximum intermittent exposure T_e
B	150°F (65°C)	185°F (85°C)
Q	225°F (110°C)	225°F (110°C)
X	250°F (121°C)	420°F (215°C)

Select the heating-cable family. Considering the maximum intermittent exposure temperature T_e and the desired maintenance temperature T_m, select the appropriate heating cable family.

Source: Raychem Design Guide for Insulated Pipes and Tubing, *H5149, Raychem Corp., Menlo Park, CA.*

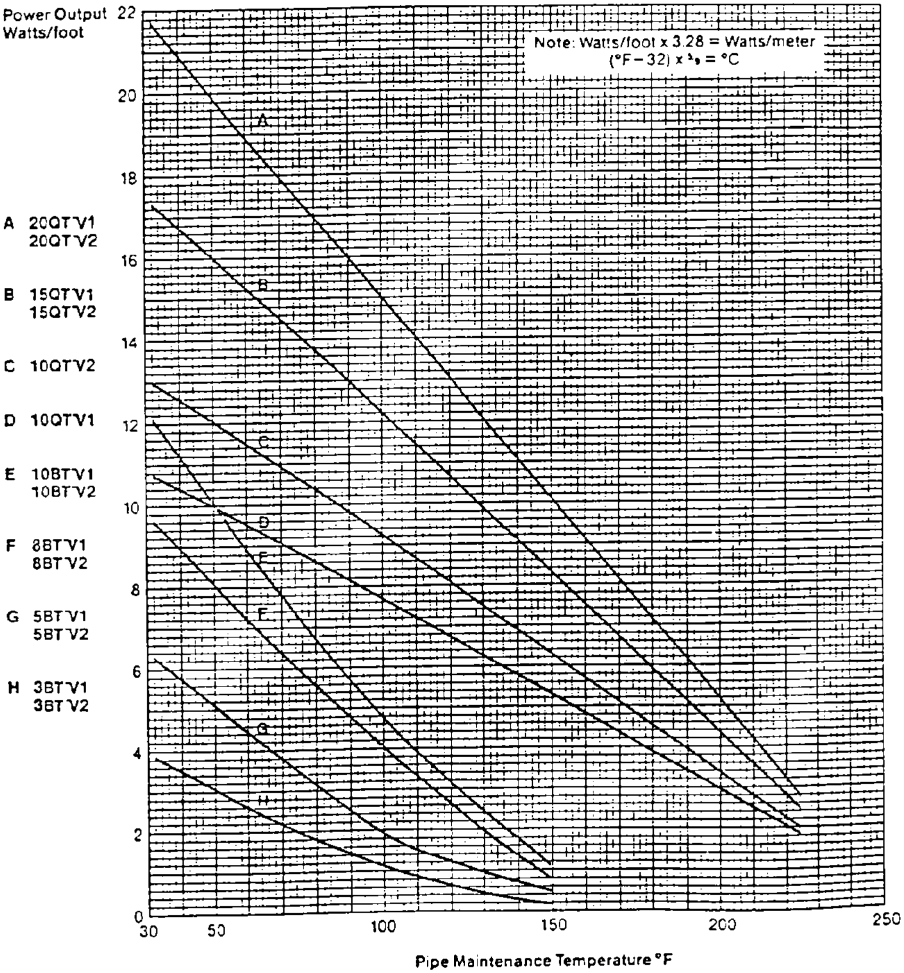

FIGURE B6.15 Thermal output of selected heaters. (Auto-Trace Design Guide, *Raychem Corp., Menlo Park, CA, 1991, p. 12.*)

from the manufacturer instead of calculating the factor by using the square of the voltage. Ohm's law ($P = V^2/R$) still applies; however, for self-regulating heaters, the electric resistance R does not remain constant. The result is an adjustment factor smaller than the change calculated from the square of the voltage.

4. Select the heater cable construction. The choice in cable construction is between a base heater with one insulating jacket and no braid or ground path, and a heater equipped with a braid and extra outer jacket. (A braid is required in all areas, both hazardous, i.e., classified area, and ordinary.)

Choice: Heater with a tinned braided, tinned copper (braid supplies the required ground path), and a fluoropolymer outer jacket for chemical resistance.

TABLE B6.9 Voltage Adjustment Chart

	240-V Autotrace heating cables powered at alternate voltages					
	208 V			277 V		
Heating cable	Power output, %	Circuit length adjustment factor	Maximum circuit length	Power output, %	Circuit length adjustment factor	Maximum circuit length
3BTV2-CT	82	0.99	630 ft (192 m)	113	1.03	710 ft (216 m)
5BTV2-CT	85	0.99	500 ft (152 m)	112	1.07	585 ft (178 m)
8BTV2-CT	89	0.93	385 ft (117 m)	108	1.08	465 ft (142 m)
10BTV2-CT	89	0.93	330 ft (100 m)	108	1.05	395 ft (120 m)
10QTV2-CT	85	0.98	365 ft (111 m)	118	1.03	410 ft (125 m)
15QTV2-CT	91	0.94	360 ft (110 m)	109	1.06	370 ft (113 m)
20QTV2-CT	90	0.92	350 ft (107 m)	107	1.06	430 ft (131 m)
5XTV2-CT	84	0.94	720 ft (220 m)	119	0.97	750 ft (229 m)
10XTV2-CT	83	0.95	510 ft (155 m)	119	0.97	575 ft (175 m)
15XTV2-CT	85	0.92	415 ft (126 m)	119	0.97	475 ft (145 m)
20XTV2-CT	88	0.92	350 ft (107 m)	119	0.97	440 ft (134 m)

Source: Auto-Trace Design Guide, *Raychem Corp., Menlo Park, CA.*

The heater cable selection is now complete. Tables B6.10, B6.11, and B6.12 are the outputs of the computer selection program run with the data used in the calculated example. As expected, the program arrived at the same heater selection as the manual technique employed in the above discussion. The program output also provides important information that augments the design selection function.

The design summary given in Table B6.10 provides the start-up load in amperes per foot as well as the operating load. The Min *T* maintained and Max *T* maintained are the maximum and minimum temperatures, respectively, the pipe can reach in this application in the absence of thermostatic control.

The Min *T* maintained 48°F (9°C) will be the pipe temperature on the coldest day [0°F (−18°C)] with the wind blowing and minimum heater output. The Max *T* maintained will be the pipe temperature on the warmest day [95°F (35°C)] with no wind and maximum heater output. These temperature values are useful in determining whether thermostats are needed. (See the later section "Control and Monitoring.")

The computer heat-tracing program can be used to implement a design change. The actual application for the computation example is a waterline in a process area where many of the process lines are regularly cleaned by purging with 150 psig (1035 kPa) steam at 366°F (186°C). It was concluded by the design team that a reasonable possibility existed that the traced line might be inadvertently steam-cleaned. What would the consequences be?

The new variable requires that the maximum heater exposure temperature be changed from 140°F (60°C) to 390°F (199°C), and the resulting output is given in Tables B6.13, B6.14, and B6.15. The most significant outcome of the requirement for a higher maximum temperature of exposure is the program's substitution of a heater designed to withstand the temperatures encountered during steam cleaning. The results of the new calculation show that the Min *T* maintained is relatively

TABLE B6.10 Design Input Summary for Computational Example Input. (Metric Unit Support Available in Other Unit of Measure Menu)

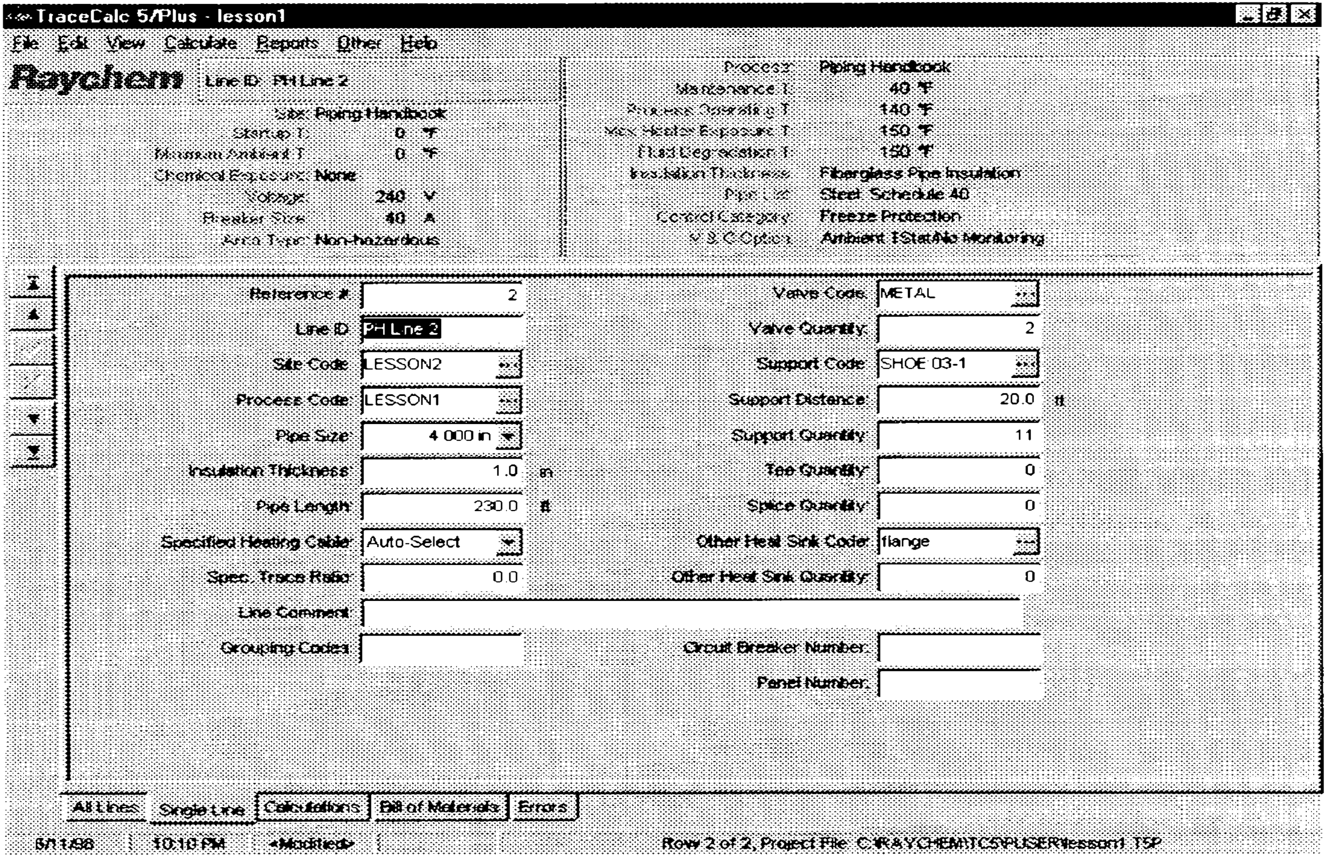
TraceCalc 5/Plus - lesson1
File Edit View Calculate Reports Other Help
Raychem
All Lines
Single Line
Calculations
Bill of Materials
Errors

Line ID: PH Line 2

Site: Piping Handbook
Startup T: 0 °F
Minimum Ambient T: 0 °F
Chemical Exposure: None
Voltage: 240 V
Breaker Size: 40 A
Area Type: Non-hazardous

Process: Piping Handbook
Maintenance T: 40 °F
Process Operating T: 140 °F
Max Heater Exposure T: 150 °F
Heat Degradation T: 150 °F
Insulation Thickness: Fiberglass Pipe Insulation
Pipe Type: Steel Schedule 40
Control Category: Freeze Protection
M & C Option: Ambient TStat/No Monitoring

Reference #:	2		Valve Code:	METAL	
Line ID:	PH Line 2		Valve Quantity:	2	
Site Code:	LESSON2		Support Code:	SHOE 03-1	
Process Code:	LESSON1		Support Distance:	20.0	ft
Pipe Size:	4.000 in		Support Quantity:	11	
Insulation Thickness:	1.0	in	Tee Quantity:	0	
Pipe Length:	230.0	ft	Splice Quantity:	0	
Specified Heating Cable:	Auto-Select		Other Heat Sink Code:	flange	
Spec. Trace Ratio:	0.0		Other Heat Sink Quantity:	0	
Line Comment:					
Grouping Codes:			Circuit Breaker Number:		
			Panel Number:		

6/11/98 10:10 PM <Modified> Row 2 of 2, Project File: C:\RAYCHEM\TC5PLUSER\lesson1.T5P

Source: *TraceCalc 5 Plus, Raychem Corp., Menlo Park, CA, ©1998.*

TABLE B6.11 Calculated Output from Computational Example. (Metric Unit Support Available in Other Unit of Measure Menu)

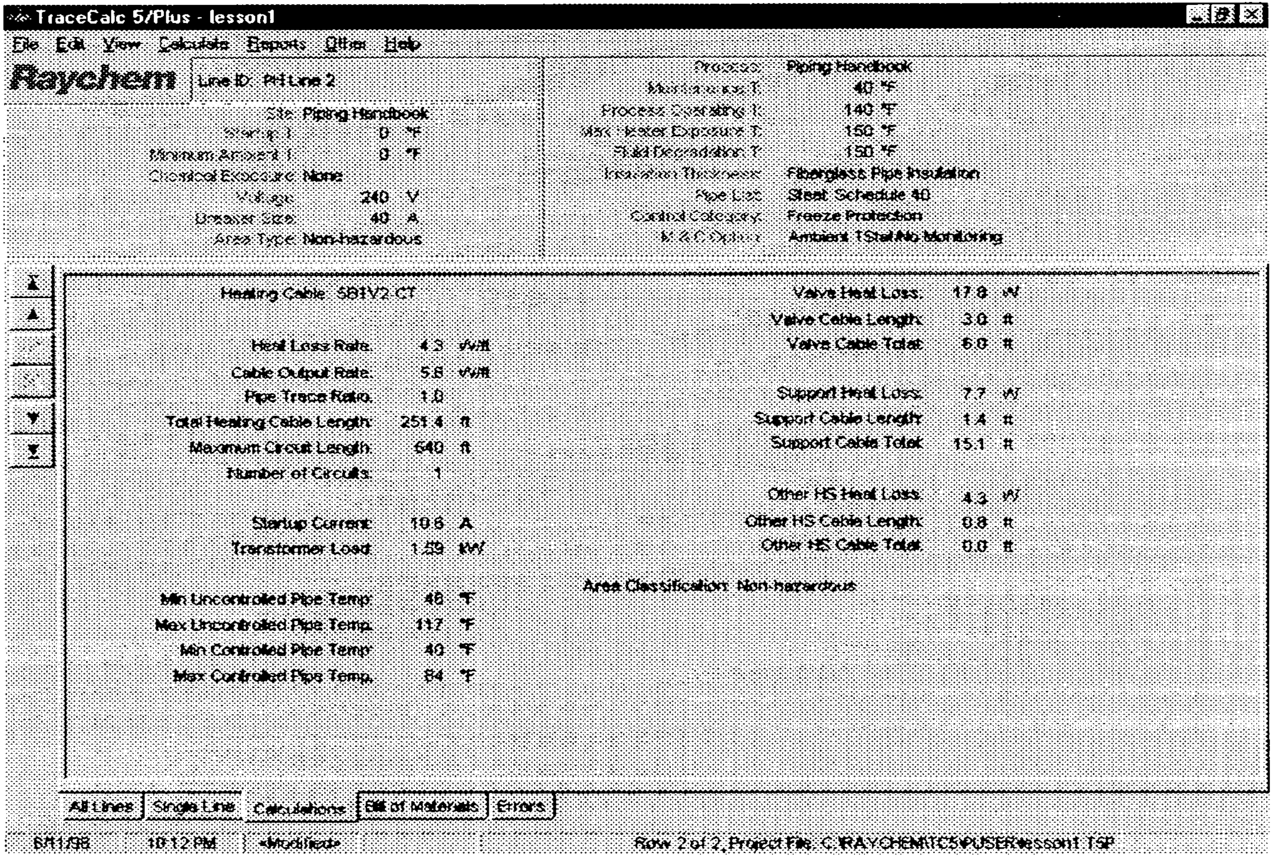
TraceCalc 5/Plus - lesson1
File Edit View Calculate Reports Other Help
Raychem
All Lines
Single Line
Calculations
Bill of Materials
Errors

Line ID: PH Line 2

Site: Piping Handbook
Starting T: 0 °F
Minimum Ambient T: 0 °F
Chemical Exposure: None
Voltage: 240 V
Breaker Size: 40 A
Area Type: Non-hazardous

Process: Piping Handbook
Maintenance T: 40 °F
Process Operating T: 140 °F
Max Heater Exposure T: 150 °F
Fluid Degradation T: 150 °F
Insulation Thickness: Fiberglass Pipe Insulation
Pipe Size: Steel Schedule 40
Control Category: Freeze Protection
M & C Option: Ambient TStat/No Monitoring

Heating Cable: 5BTV2-CT

Heat Loss Rate: 4.3 W/ft
Cable Output Rate: 5.8 W/ft
Pipe Trace Ratio: 1.0
Total Heating Cable Length: 251.4 ft
Maximum Circuit Length: 640 ft
Number of Circuits: 1

Startup Current: 10.6 A
Transformer Load: 1.59 kW

Min Uncontrolled Pipe Temp: 48 °F
Max Uncontrolled Pipe Temp: 117 °F
Min Controlled Pipe Temp: 40 °F
Max Controlled Pipe Temp: 84 °F

Valve Heat Loss: 17.8 W
Valve Cable Length: 3.0 ft
Valve Cable Total: 6.0 ft

Support Heat Loss: 7.7 W
Support Cable Length: 1.4 ft
Support Cable Total: 15.1 ft

Other HS Heat Loss: 4.3 W
Other HS Cable Length: 0.8 ft
Other HS Cable Total: 0.0 ft

Area Classification: Non-hazardous

6/11/98 10:12 PM <Modified> Row 2 of 2, Project File: C:\RAYCHEM\TC5P\USER\lesson1.TSP

Source: *TraceCalc 5 Plus, Raychem Corp., Menlo Park, CA, ©1998.*

TABLE B6.12 Bill of Materials for Computational Example. (Metric Unit Support Available in Other Unit of Measure Menu)

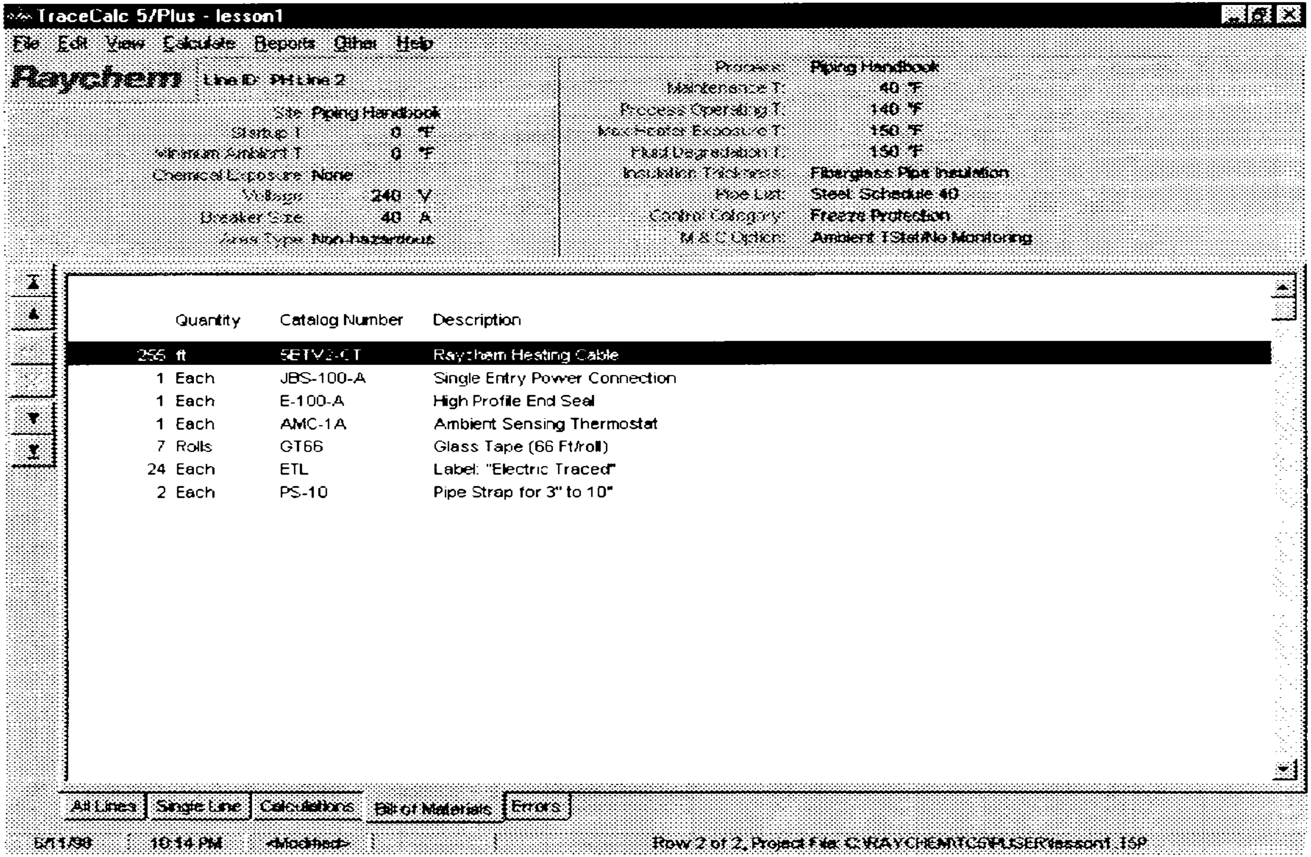
TraceCalc 5/Plus - lesson1
File Edit View Calculate Reports Other Help
Raychem
All Lines
Single Line
Calculations
Bill of Materials
Errors

Line ID: PH Line 2

Site: Piping Handbook
Startup T: 0 °F
Minimum Ambient T: 0 °F
Chemical Exposure: None
Voltage: 240 V
Breaker Size: 40 A
Area Type: Non-hazardous

Process: Piping Handbook
Maintenance T: 40 °F
Process Operating T: 140 °F
Max Heater Exposure T: 150 °F
Fluid Degradation T: 150 °F
Insulation Thickness: Fiberglass Pipe Insulation
Pipe List: Steel Schedule 40
Control Category: Freeze Protection
M & C Option: Ambient TStat/No Monitoring

Quantity		Catalog Number	Description
256	ft	5BTV2-CT	Raychem Heating Cable
1	Each	JBS-100-A	Single Entry Power Connection
1	Each	E-100-A	High Profile End Seal
1	Each	AMC-1A	Ambient Sensing Thermostat
7	Rolls	GT66	Glass Tape (66 Ft/roll)
24	Each	ETL	Label: "Electric Traced"
2	Each	PS-10	Pipe Strap for 3" to 10"

5/11/98 : 10:14 PM <Modified> Row 2 of 2, Project File: C:\RAYCHEM\TC5PLUS\ER\lesson1.T5P

Source: *TraceCalc 5 Plus, Raychem Corp., Menlo Park, CA, ©1998.*

TABLE B6.13 Design Input Summary for Steam-Cleaned Computational Example. (Metric Unit Support Available in Other Unit of Measure Menu)

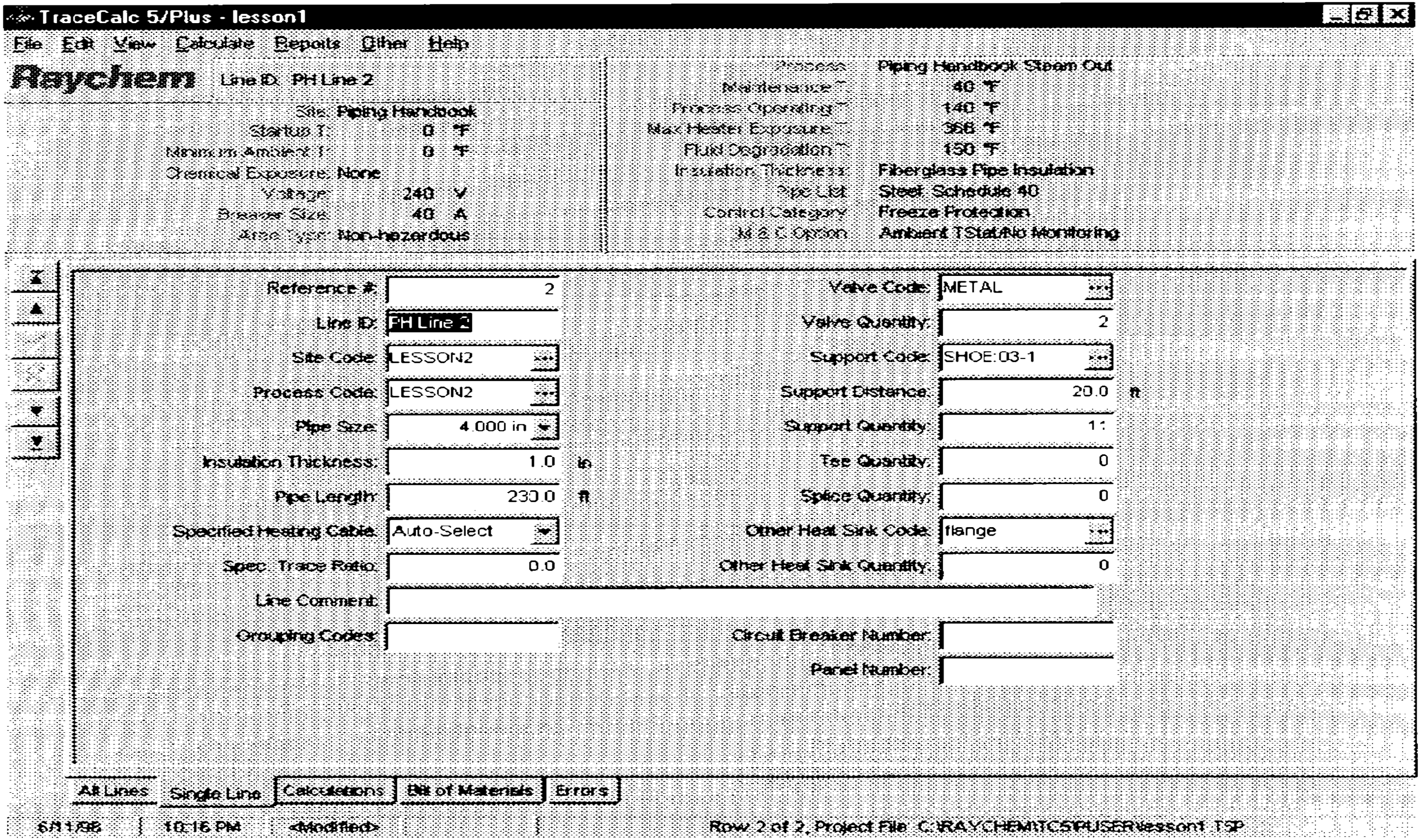
TraceCalc 5/Plus - lesson1
File Edit View Calculate Reports Other Help
Raychem
All Lines
Single Line
Calculations
Bill of Materials
Errors

Line ID: PH Line 2

Site: Piping Handbook
Startup T: 0 °F
Minimum Ambient T: 0 °F
Chemical Exposure: None
Voltage: 240 V
Breaker Size: 40 A
Area Type: Non-hazardous

Process: Piping Handbook Steam Out
Maintenance T: 40 °F
Process Operating T: 140 °F
Max Heater Exposure T: 368 °F
Fluid Degradation T: 150 °F
Insulation Thickness: Fiberglass Pipe Insulation
Pipe Mtl: Steel, Schedule 40
Control Category: Freeze Protection
M & C Option: Ambient TStat/No Monitoring

Reference #:	2	Valve Code:	METAL
Line ID:	PH Line 2	Valve Quantity:	2
Site Code:	LESSON2	Support Code:	SHOE:03-1
Process Code:	LESSON2	Support Distance:	20.0 ft
Pipe Size:	4.000 in	Support Quantity:	11
Insulation Thickness:	1.0 in	Tee Quantity:	0
Pipe Length:	230.0 ft	Splice Quantity:	0
Specified Heating Cable:	Auto-Select	Other Heat Sink Code:	flange
Spec. Trace Ratio:	0.0	Other Heat Sink Quantity:	0
Line Comment:			
Grouping Codes:		Circuit Breaker Number:	
		Panel Number:	

6/11/98 | 10:16 PM | <Modified> | Row 2 of 2, Project File: C:\RAYCHEM\TC5P\USER\lesson1.TSP

Source: *TraceCalc 5 Plus, Raychem Corp., Menlo Park, CA, ©1998.*

TABLE B6.14 Calculated Output from Steam-Cleaned Computational Example. (Metric Unit Support Available in Other Unit of Measure Menu)

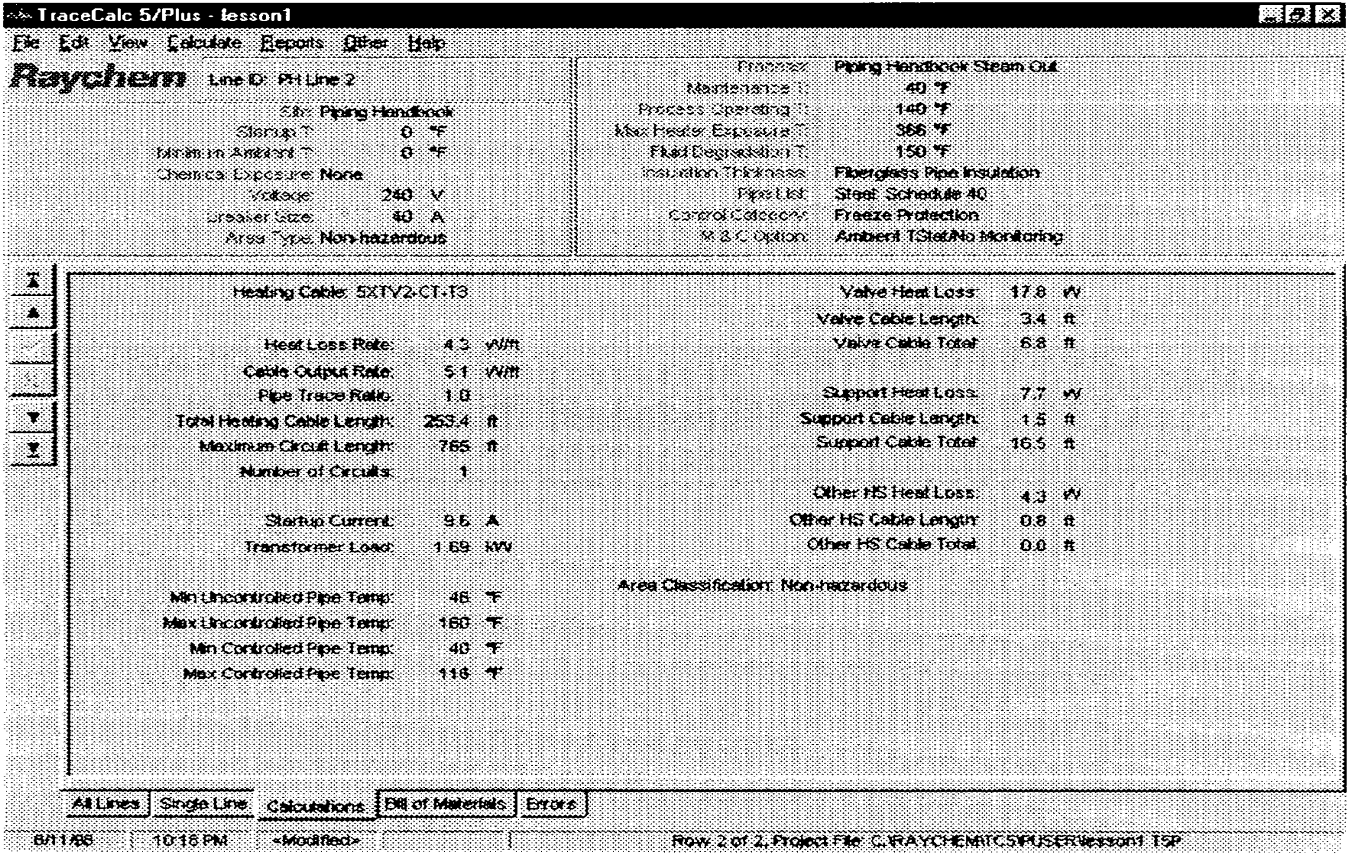
TraceCalc 5/Plus - lesson1
File Edit View Calculate Reports Other Help
Raychem
All Lines
Single Line
Calculations
Bill of Materials
Errors

Line ID: PH Line 2

Site: Piping Handbook
Startup T: 0 °F
Minimum Ambient T: 0 °F
Chemical Exposure: None
Voltage: 240 V
Breaker Size: 40 A
Area Type: Non-hazardous

Process: Piping Handbook Steam Out
Maintenance T: 40 °F
Process Operating T: 140 °F
Max Heater Exposure T: 366 °F
Fluid Degradation T: 150 °F
Insulation Thickness: Fiberglass Pipe Insulation
Pipe List: Steel Schedule 40
Control Category: Freeze Protection
M & C Option: Ambient TStat/No Monitoring

Heating Cable: 5XTV2-CT-T3

Heat Loss Rate: 4.3 W/ft
Cable Output Rate: 5.1 W/ft
Pipe Trace Ratio: 1.0
Total Heating Cable Length: 253.4 ft
Maximum Circuit Length: 765 ft
Number of Circuits: 1

Startup Current: 9.6 A
Transformer Load: 1.69 kW

Min Uncontrolled Pipe Temp: 46 °F
Max Uncontrolled Pipe Temp: 160 °F
Min Controlled Pipe Temp: 40 °F
Max Controlled Pipe Temp: 116 °F

Valve Heat Loss: 17.8 W
Valve Cable Length: 3.4 ft
Valve Cable Total: 6.8 ft

Support Heat Loss: 7.7 W
Support Cable Length: 1.5 ft
Support Cable Total: 16.5 ft

Other HS Heat Loss: 4.3 W
Other HS Cable Length: 0.8 ft
Other HS Cable Total: 0.0 ft

Area Classification: Non-hazardous

8/11/98 10:16 PM <Modified> Row 2 of 2, Project File: C:\RAYCHEM\TC5\PUSER\lesson1.TSP

Source: *TraceCalc 5 Plus, Raychem Corp., Menlo Park, CA, ©1998.*

TABLE B6.15 Bill of Materials for Steam-Cleaned Computational Example. (Metric Unit Support Available in Other Unit of Measure Menu)

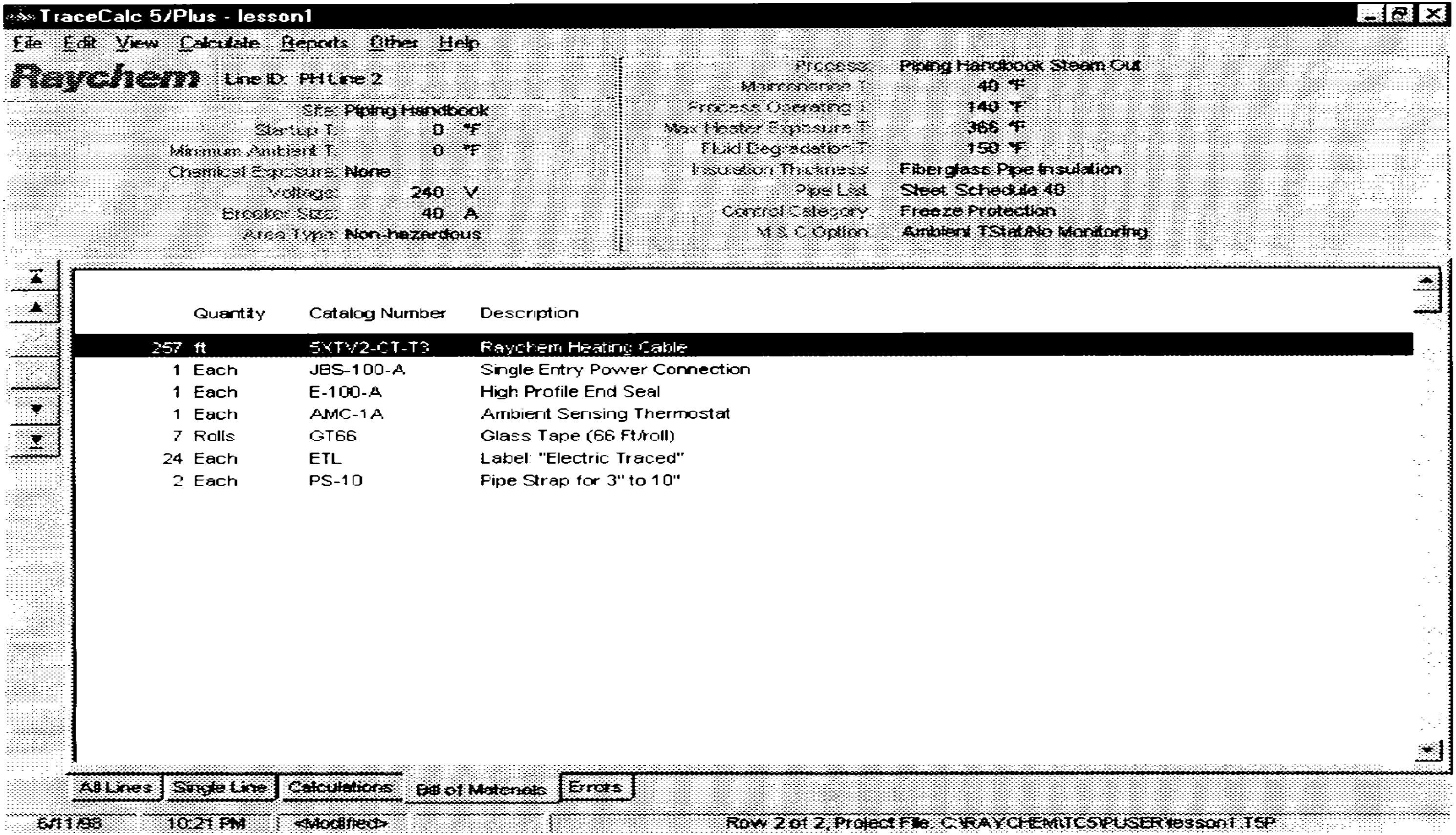
TraceCalc 5/Plus - lesson1
File
Edit
View
Calculate
Reports
Other
Help
Raychem
All Lines
Single Line
Calculations
Bill of Materials
Errors

Line ID: PH Line 2

Site: Piping Handbook
Startup T: 0 °F
Minimum Ambient T: 0 °F
Chemical Exposure: None
Voltage: 240 V
Breaker Size: 40 A
Area Type: Non-hazardous

Process: Piping Handbook Steam Out
Maintenance T: 40 °F
Process Operating T: 140 °F
Max Heater Exposure T: 366 °F
Fluid Degradation T: 150 °F
Insulation Thickness: Fiberglass Pipe Insulation
Pipe Matl: Steel Schedule 40
Control Category: Freeze Protection
M.S.C Option: Ambient TStat/No Monitoring

Quantity		Catalog Number	Description
257	ft	5XTV2-CT-T3	Raychem Heating Cable
1	Each	JBS-100-A	Single Entry Power Connection
1	Each	E-100-A	High Profile End Seal
1	Each	AMC-1A	Ambient Sensing Thermostat
7	Rolls	GT66	Glass Tape (66 Ft/roll)
24	Each	ETL	Label: "Electric Traced"
2	Each	PS-10	Pipe Strap for 3" to 10"

6/11/98 10:21 PM <Modified> Row 2 of 2, Project File: C:\RAYCHEM\TCS\PUSER\lesson1.TSP

Source: *TraceCalc 5 Plus, Raychem Corp., Menlo Park, CA, ©1998.*

unchanged at 47°F (8°C), but the Max T maintained has increased to 146°F (63°C). This increase in the maximum temperature is a function of the original heater's power temperature curve, which is considerably steeper when compared with the type selected for the new set of conditions. If a constant-wattage heater had been selected, the maximum temperature would be well above 146°F (63°C). The design change calculation illustrates two important rules to follow when using self-regulating heaters:

Rule 1. Never risk exposing the heater to temperatures in excess of those for which the heater is rated. If the heater originally specified (T_e = 185°F, or 85°C) had been installed and the pipe were subsequently steam-cleaned, the heater would have suffered an irreversible resistance increase; i.e., it would no longer be functional. The cost of repair/removal of the lagging, removal and possible replacement of the insulation, replacement of the heater, followed by reinstallation of the entire system, would be more than the original price of the system. And this sum is in addition to process-related costs which might result from heater failure, such as the replacement of frozen and/or broken pipe, or in lengthy production downtime when a failed tracer shuts down a process.

Because of the potential costs resulting from tracer failure caused by inadvertent exposure to steam, experienced heat-tracing professionals generally use heaters capable of withstanding steam cleaning in any area where steam cleaning is practiced.

Rule 2. Select the heater with the lowest temperature rating capable of withstanding the anticipated maximum exposure temperature.

1. The higher-temperature heaters are generally more expensive because they are made from more costly heat-resistant polymers.
2. The higher temperature generated by high-temperature heaters can cause safety problems. Unnecessary heating also increases the rate of corrosion and wastes energy. Higher-temperature heaters often require a more expensive heater control system.

While the potential savings in purchasing a low-temperature heater are not worth the risk of heater failure from steam cleaning, these additional costs are not justified in applications where there is no risk of steam exposure. Water pipe in a pollution control area where no steam is available is an example.

Component and Accessory Selection

The components necessary to provide power and to terminate, splice, and tee the heat-tracing are provided by the manufacturer. With self-regulating and zone, it is important to acquire components designed for the heat-tracing system selected, to ensure that the approvals are valid. Each supplier's system of components is unique and generally not interchangeable with that of other manufacturers. In some cases the components from one supplier may work in another's heat-tracing system, but they must be verified to be acceptable for such use. The components available in this example are shown in Fig. B6.16.

Each manufacturer provides or recommends a complete system of components and accessories to install the heater as part of a total tracing system. Table B6.12 (the design exhibit from the computer solution) shows a complete bill of material for the design example. In addition to the power connection and the end termination, a splice and/or a tee may be required. The other materials on the list are

- ETL (electric traced label). The National Electric Code requires that electric

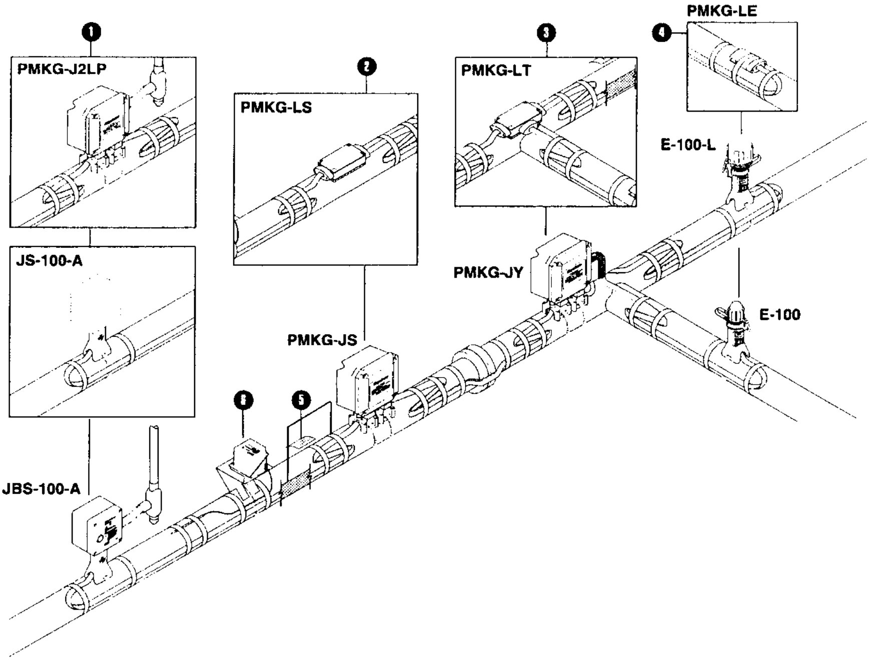

FIGURE B6.16 Component selection guide. (Raychem Design Guide, *Raychem Corp., Menlo Park, CA, © 1998.*)

traced pipes have signs on the outside of the lagging on alternating sides every 10 ft.

- GT66 glass tape for taping the heater to the pipe.
- PS-10 pipe straps to attach the power connection assembly to the pipe.

Control and Monitoring

Control and monitoring must be considered as part of the system design since these elements can have a significant effect on the circuit layout.

1. Control. Control is the ability to interrupt and restore power to the heat tracer in order to maintain the temperature within a preset range and/or to save energy. Monitoring is any method that provides an ongoing indication of the heating system's operational status. The major control options are as follows:

No Control, or Self-Regulating Control. The heater is constantly supplied with full power, and the self-regulating characteristics of the heater control the pipe temperature. In a limited number of tracing situations, a no-control configuration can also be used with constant-wattage heaters. If a circuit without controller is used in a hazardous area, the *T* rating must be calculated at 120 percent of the rated voltage. (See the earlier section "Area Classification.")

Self-regulating control offers the lowest installed cost and the highest reliability.

This system uses more energy because the heater is always on. Approximately 8 to 12 percent of the freeze protection systems and 10 to 15 percent of the process temperature systems use self-regulating control.

Ambient-Sensing Control. A thermostat measures the ambient temperature. The heating system is energized when the ambient temperature drops below a preset level. Ambient sensing offers a degree of control for very little incremental cost (one thermostat and the required switching device). Of the freeze protection systems, particularly those that use self-regulating heaters, 70 to 80 percent use ambient-sensing control.

Line-Sensing Control. A sensor measures the temperature of the pipe. Each heater circuit is individually controlled to maintain the design temperature by either varying or turning the circuit voltage on and off (see Fig. B6.17). Line sensing is often used for process control systems. It offers the highest degree of temperature control and the lowest energy use, but it also has the highest installed costs.[60]

Dead Leg Control. A thermostat measures a section of traced pipe that cannot have fluid flow (a "dead leg"). The entire system is turned on when the temperature drops below the design temperature to be maintained. Dead leg sensing requires

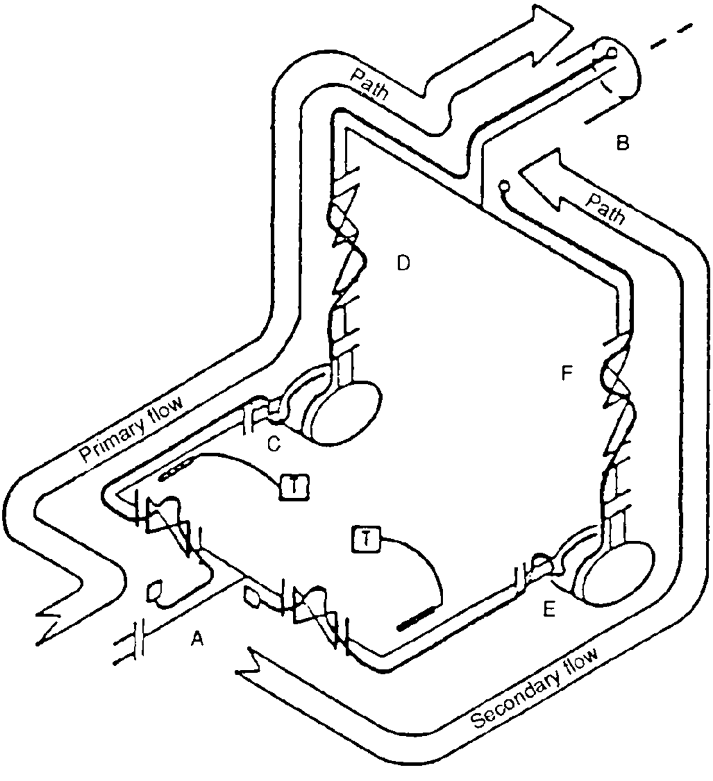

FIGURE B6.17 Line-sensing circuit design for multiple flow paths. (*M. Sarfatti, editor.* Raychem Engineering Manual for Electric Heat Tracing Systems, *vol. 1, U.S. edition, pp. 2–27, Fig. 3-11.*)

only one thermostat and eliminates the need for the additional circuits required with line-sensing control. The downside of dead leg sensing is the inability of the system to reduce heat output even when flow conditions within the pipe would dictate such an adjustment. (By definition, the dead leg on which the sensor is placed is in a permanent no-flow condition.[61]) Presently, about 5 to 10 percent of the systems installed use dead leg control.

Proportional Ambient-Sensing Control (PASC). A new addition to available control methods is proportional ambient-sensing control. This control will measure ambient, determine the heat-up and cool-down rates of the smallest pipe, and cycle the power to the heater circuit depending on these variables. This will impose a duty cycle on the heating system that decreases the variability of the temperature range. One can think of it as global control. If they are self-regulating heaters, they will provide a local override for much tighter temperature control. At minimum ambient temperature, the power is on 100 percent of the time. As the ambient temperature approaches the maintain temperature, the duty cycle decreases proportionally. If the maintain temperature is above the maximum ambient temperature, the controller never shuts off completely, and there will always be some proportion of the duty cycle maintained. With self-regulating heaters, this system also adjusts heat input for valves and supports, depending on their actual thermal characteristics instead of the design characteristics. If a valve is a little hot, the self-regulating heater supplies a little less heat; if the valve is a little cold, the heater supplies a little more heat.

This global system reduces circuit costs since now flow paths are not a critical part of the design. This method has been used with freeze protection systems with ambient control, and now this improved PASC version is available for process temperature maintenance systems. Significant cost savings and a tighter temperature control band are available. Figure B6.18 shows the relationship between control type and temperature variation for various electric heat-tracing control categories for a typical freeze protection application. The minimum ambient temperature is 0°F (−18°C) and the maintain temperature is 40°F (5°C). A new expert system design program (Ref. 54) is able to calculate various expected results when the design parameters are specified in the program. These programs will predict the

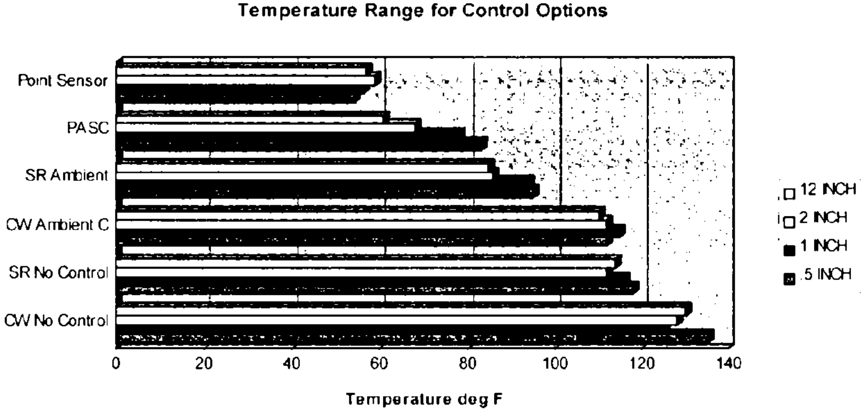

FIGURE B6.18 Temperature range for control options.

steady-state temperatures for various piping systems including the valves and supports.

Stabilized design temperatures for Zone 1 and Zone 2 are also calculated. The combination of PASC with self-regulating heaters gives the electric heat-trace designer an optimum system to develop cost-effective and reliable systems that provide significantly less temperature variation across the different thermal features of a typical piping system.

2. Monitoring. *Monitoring* is the term used to describe any mechanism that provides information about the functional state of the heat-tracing system.[62] Most heat-tracing systems employ one of the following monitoring methods:

No Monitoring. The vast majority of heat-tracing systems are not provided with monitoring. Users have found that properly installed heat-tracing systems are very reliable, and under these circumstances, the high cost of monitoring is not generally warranted.

Ground-Fault Monitoring. Leakage current from the heater strip can be monitored with a ground-fault circuit breaker. An annunciator is included to indicate when the breaker has tripped, or alternatively, a relay is switched in response to a loss of voltage. This method is also a good way to monitor the heater strip for mechanical abuse since significant mechanical damage to a braided heater will result in leakage current to the braid. Use of ground-fault breakers with annunciators or relays provides the highest value of added protection per monitoring dollar invested.

Voltage Monitoring. Voltage at the beginning of the circuit can be sensed by actuating a relay-driven alarm whenever there is no voltage from the circuit breaker. A signal light is the simplest technique for monitoring voltage at the end of the circuit. This system is often used for freeze protection applications with ambient-sensing control and either self-regulating heaters or zone heaters but not with MI cable, as MI cable usually requires line-sensing thermostats.

Although a light indicator is a low-cost system, it requires a visual inspection to detect voltage loss. Thus, there is a good chance that a cut line will lead to a failure before it is detected. The technique does not work well with line-sensing thermostats or dead leg control since there is no way to distinguish if the light is off because of a cut line or because of a cycling thermostat.

Voltage Sensing with Microprocessor-Based Monitoring and Control System. The best of these systems uses resistance temperature detectors (RTDs). (See Fig. B6.19.) Since the bus wires of the heaters are used to carry the detector signal, any cut in the line trips the alarm due to signal loss. Microprocessor-based monitoring and control systems are capable of providing very accurate information

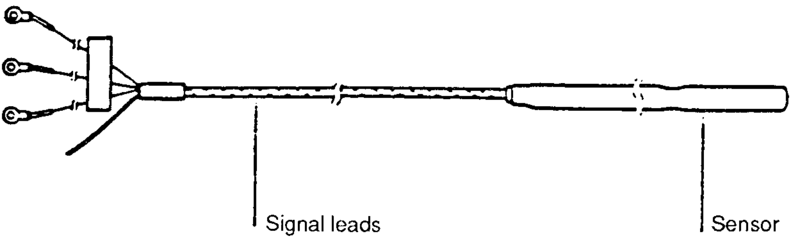

FIGURE B6.19 Resistance temperature device. (Chemelex Auto-Trace Installation and Operation Manual, *Raychem Corp., Process Division, Menlo Park, CA, p. 1.5.3.*)

about the condition of the heat-tracing system and the pipe temperature, but they often cost as much as the heat-tracing system itself. For this reason, they are generally used only for temperature-critical applications.

Temperature Sensing. Thermostats can be used to alarm when the temperature at any monitored point drops below the alarm temperature. This is a good technique when there is only one or two points (such as critical control valves) where the proper temperature must be maintained.

The current draw of the heat tracer can also be monitored with microprocessor-based systems using a simple ammeter to indicate the current draw of each circuit. Current monitoring works well with all types of heaters when line-sensing control is used, but is a poor choice in applications employing ambient-sensing control and self-regulating heaters.

Power Line Carrier

A distributed data acquisition system that uses the ac power lines as the data transmission medium is a new addition to the monitoring and control area. The system uses frequency shift keying to encode digital data onto the power line network. Digital 0s and 1s are transmitted by changing the frequency of the carrier (e.g., from 50 to 47.5 kHz). The digital data are transmitted in a message package that includes an error check to guarantee data integrity.

The system uses power from a parallel-circuit heat-tracing cable, measures the temperature at the end of the pipe, and transmits these data to a monitoring panel. If a signal is received, the user knows there is voltage to the end of the circuit. In addition, the temperature of the pipe is known. Alarm limits and automatic enunciation to a central location can be set. Significant savings are realized when both field power and instrument wiring are eliminated.

REFERENCES

1. K. Henry, *Introduction to Heat Tracing,* Cold Regions Research and Engineering Lab, Report no. CRREL-TD-86-1, June 1986, p. 1.
2. I.P. Kohli, ‘‘Steam Tracing of Pipelines,’’ *Chem. Eng.,* March 26, 1979, p. 156.
3. E. Fisch, ‘‘Winterizing Process Plants,’’ *Chem. Eng.,* August 20, 1984, p. 130.
4. Reference 2.
5. Reference 1, p. 2.
6. J.T. Lonsdale, and J.E. Mundy, ‘‘Estimating Pipe Heat-Tracing Costs,’’ *Chem. Eng.,* November 29, 1982, pp. 89–93.
7. Reference 2, p. 159.
8. Reference 1, p. 4.
9. Chet Sandberg, *Electrical Heat Tracing Systems for Use in Pulp and Paper Plants; Considerations for the 1990's,* ISA Pulp and Paper Industries Division Symposium (in conjunction with TAPPE), Nashville, TN, March 1993.
10. Reference 1, pp. 5–6.
11. J.E. Bilbro, and J.E. Levines, ‘‘Electric Heat Tracing—State of the Art,’’ *IEEE Transactions on Industry and General Applications,* vol. IGA-5, no. 4, July/August 1969, p. 476.
12. J.T. Lonsdale, and L. Mayer, *Heat-Tracing Technologies, Energy Use and Temperature Control,* Raychem Corp. Draft Report, 1988, p. 5.

13. *Chemelex Auto-Trace Design Guide,* Raychem Corp., Chemelex Division, Menlo Park, CA, 1991, p. 7.
14. Reference 6, p. 89.
15. Reference 9, p. 5.
16. Reference 12, pp. 4–5.
17. Reference 1, p. 9.
18. Reference 12, pp. 4–5.
19. Reference 1, p. 9.
20. Reference 6, pp. 89–90.
21. Reference 12, pp. 4–5.
22. Reference 12, pp. 4–5.
23. Reference 12, p. 2.
24. Reference 6, p. 89.
25. Reference 6, p. 89.
26. Reference 12, p. 3.
27. R.N. Ohlson, ‘‘A User's Experience with Current Self-Limiting Heat Tracing Cable,’’ IEEE Paper no. PCI-80-25, p. 180.
28. Reference 27, p. 180.
29. Reference 1, pp. 8–9.
30. Reference 12, p. 3.
31. IEEE Recommended Practice for Electrical Impedance, Induction, and Skin Effect Heating of Pipelines and Vessels, ANSI/IEEE Std. 844–1992, pp. 29–30; C.J. Erickson, Chairman, the Electrical Impedance, Induction and Skin Effect Heating Working Group, Standards Subcommittee of the Petroleum and Chemical Industry Committee.
32. N.B. Carson, *A New Method for Heat Tracing Long Pipelines,* ASME, Petroleum Mechanical Engineering Conference, Dallas, TX, September 15–18, 1974, pp. 2–4.
33. Reference 32, p. 4.
34. Reference 31, p. 30.
35. Reference 1, p. 15.
36. Reference 32, p. 4.
37. M. Ando, and H. Takki, *Application of the SECT Electric Heating System to Long Distance Pipelines;* Comité Français Electrothermie, 9th International Congress, October 20–24, 1980, p. 1.
38. Reference 31, p. 30.
39. Reference 1, p. 15.
40. Reference 31, pp. 18–19.
41. Reference 1, pp 15–16.
42. George Koester, II, ‘‘Pipe Heat Tracing with Electric Impedance Heating,’’ *Plant Engineering,* vol. 32, no. 24, pp. 113–116, November 23, 1978.
43. Reference 1, p. 16.
44. Reference 1, p. 16.
45. Reference 31, p. 23.
46. Reference 1, p. 17.
47. Reference 31, p. 16.
48. P.J. Schram, ed., *National Electrical Code 1996 Handbook,* 4th ed., National Fire Protection Association, Quincy, MA.

49. Reference 50, Article 500, pp. 659–677.
50. Reference 6, pp. 89–93.
51. *Heat Up/Cool Down Analysis Program,* Raychem Corp., Process Division, Menlo Park, CA.
52. Reference 12, p. 11.
53. Reference 9, p. 10.
54. *AutoTrace Steam Analysis Program,* Raychem Corp., Menlo Park, CA.
55. C.J. Erickson, IEEE Paper no. PCI-90-2, September 1990, p. 9.
56. Reference 12, p. 11.
57. Reference 51.
58. M. Sarfatti, ed., *Raychem Engineering Manual for Electrical Heat-Tracing Systems,* vol. 1, U.S. edition, pp. 3–33.
59. IEEE Std. 515–1983, Section 6.3.5, p. 14, IEEE Recommended Practice for the Testing, Design, Installation, and Maintenance of Electrical Resistance Heat-Tracing for Industrial Applications, R. Hulett and Dusty Brown, Chairman, Working Group Standards Subcommittee of the Petroleum and Chemical Industry Committee.
60. Reference 12, p. 9.
61. Reference 58, pp. 3–19, 3–25.
62. Reference 58, pp. 4–19 through 4–27.

CHAPTER B7

THERMAL INSULATION OF PIPING

Kenneth R. Collier
Systems Engineer
Pittsburgh Corning Corporation
Pittsburgh, PA

Kathleen M. Posteraro
Systems Engineer
Pittsburgh Corning Corporation
Pittsburgh, PA

Thermal insulation serves many useful purposes in both industrial and commercial piping applications. In simplest terms, thermal insulation reduces heat flow from one surface to another. For hot, or above ambient, piping applications, thermal insulation reduces heat loss. On cold, or below ambient, piping applications, the insulation generally serves the purpose of minimizing heat gain.

In some cases the design purpose of the application may seem unrelated to heat loss or heat gain; however, the net result is that heat transfer is retarded. Two illustrations are insulation for personnel protection and insulation for condensation control.

For personnel protection there must be enough insulation to keep the surface temperature below a given design value—usually 140°F (60°C). For condensation control, there must be enough insulation to keep the surface temperature above the dew point. In both cases the insulation is used to control the surface temperature for a desired effect other than thermal conservation. The effect, however, is that in both cases insulation retards heat transfer enough to control the surface temperature at the given design criteria.

There is much more to correctly designing and specifying an insulation system than just selecting a particular insulation material to be used. This chapter will discuss some of the practical information necessary to initiate an effective insulation system design. The National Insulation Association (NIA) in its ‘‘Wheels of Learning’’ training program defines insulation as ‘‘those materials or combination of materials which retard the flow of heat.’’ As noted in the NIA definition of insulation, a combination of materials may be used. The emphasis on the word *system* when referring to the purpose of this chapter signifies the importance of considering *all* the materials, conditions, and parameters involved in insulation specification and design.

An insulation system is any combination of insulation materials used in conjunction with mastic, adhesives, sealants, coatings, membranes, barriers, and/or other accessory products to provide an efficient assembly for the reduction of heat flow. The engineering of insulation systems can frequently either determine or direct the ultimate performance of the process. Improperly engineered insulation systems are subject to damage and degradation. This degradation will compromise the performance characteristics of the insulation material and in many cases the entire process for which the insulation system was specified.

There are many different types of insulation materials available for commerical and industrial piping applications. Each material has its own set of properties and performance characteristics. And for each insulation material available, a correct application procedure and corresponding accessory materials, or ''system,'' are available.

Before we get into the essence of this chapter, which addresses some of the design parameters, materials, and systems that are commonly incorporated into insulation system design, it is necessary to review some fundamentals of heat transfer.

FUNDAMENTALS OF HEAT TRANSFER

The following definitions, taken from ASTM C168-88a, *Standard Definitions of Terms Relating to Thermal Insulating Materials,* and the NIA ''Wheels of Learning'' training program, will be useful in reviewing the fundamentals of heat transfer.

Btu (*British thermal unit*): the amount of energy required to raise 1 lb of water 1°F (The equivalent metric designation is a *joule,* which is defined as the work done when the point of application of a force of 1 N is displaced a distance of 1 m in the direction of the force. 1 cal = 4.1868 J: furthermore, 1 Btu = 1055.06 J.)

Conduction: the transfer of energy (heat) within a body (material) or between two bodies in physical contact.

Convection: the transfer of heat by movement of parts of a liquid or gas within the liquid or gas because of differences in the density, temperature, etc., of the parts.

Radiation: the transfer of energy (heat) from a higher-temperature body, through space, to another lower temperature body without warming the space between.

Thermal conductivity k: the time rate of steady state heat flow through a unit area of a homogeneous material induced by a unit temperature gradient in a direction perpendicular to that unit area. Units are commonly Btu · in $(h \cdot ft^2\ °F)$ $[W/(m \cdot K)]$.

Emittance E: the ratio of the radiant flux emitted by a specimen to that emitted by a black body at the same temperature and under the same conditions.

Radiance: the rate of radiant emission per unit solid angle and per unit projected area of a source in a stated angular direction from the surface (usually the normal).

Reflectance: the fraction of the incident radiation upon a surface that is reflected from the surface.

Heat flow or heat flow rate Q: the quantity of heat transferred to or from a system in unit time. Usually measured in Btu/h.

Thermal insulation: a material or assembly of materials used to provide resistance to heat flow.

Thermal insulation system: applied or installed thermal insulation complete with any accessories, vapor retarder, and facing required.

Heat is transferred by any one of, or combination of, conduction, convection, and/or radiation.

Conduction only occurs when there is physical contact. Heat is transferred through most metals very efficiently because metal is a good conductor. A good insulation material is a poor conductor. Convection, with respect to insulation systems, is the movement of air on or about the surface of an insulated body. And radiation is best described by referring to the warmth you feel when you stand in the sun or by a fire.

Heat transferred through insulation is primarily a function of the resistance of the insulation with respect to its thickness, the operating temperature of the surface being insulated, the surface characteristics of the outer membrane (see emittance above), and the ambient conditions involved.

Thermal conductivity, as defined above, is the rate of heat transfer in one direction (perpendicular to an area) per unit area, per unit temperature differential per unit thickness, per unit time. In the English system of units, typical dimensions are

$$|k| = \mathrm{Btu/(h \cdot {}^\circ F \cdot ft^2/ft) = Btu/(h \cdot ft \cdot {}^\circ F)} \qquad [\mathrm{W/cm \cdot {}^\circ C}]$$

or $$|k| = \mathrm{Btu/(h \cdot {}^\circ F \cdot ft^2/in)} \qquad [\mathrm{W/(m^2 \cdot K)}]$$

or $$|k| = \mathrm{Btu \cdot in(h \cdot ft^2 \cdot {}^\circ F)} \qquad [\mathrm{W/(m^2 \cdot K)}]$$

The units of measurement used have absolutely no effect on the fundamental equation of heat transfer. Heat transferred through flat surface geometry is most commonly represented by Eq. (B7.1):

$$Q = \frac{A(T_i - T_2)}{X/K + 1/f} \tag{B7.1}$$

where Q = total heat loss, Btu (h · ft^2) (W/m^2)
A = area of heat flow, ft^2 (m^2)
T_i = inside operating temperature, °F (°C or K)
T_2 = outside ambient temperature, °F (°C or K)
X = insulation thickness, in (m)
k = thermal conductivity, Btu · in (h · ft^2 · °F) [W/(m · K)]
$1/f$ = surface resistance factor

Heat transferred through cylindrical, or pipe insulation, geometry is most commonly represented by Eq. (B7.2) and Fig. B7.1.

$$Q = \frac{2\pi KL(T_i - T_s)}{R_o \ln (R_o/R_i)} \tag{B7.2}$$

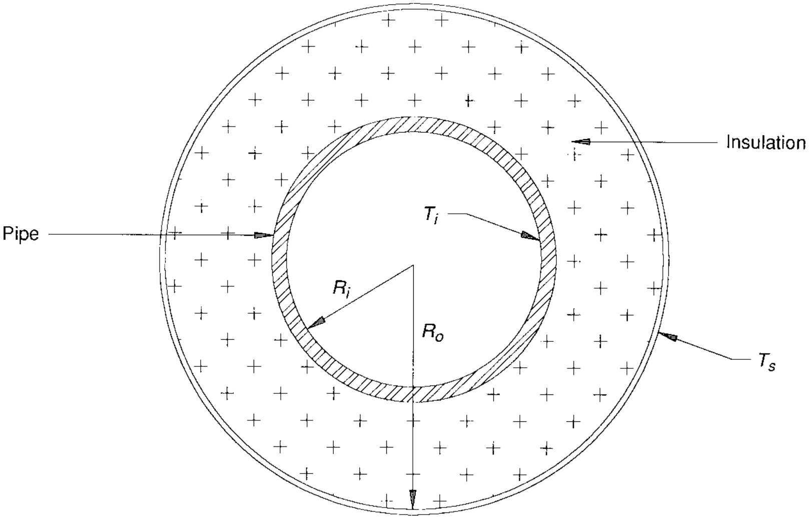

FIGURE B7.1 Cross-section of an insulated pipe.

where Q = total heat loss Btu/(h · ft^2)
k = thermal conductivity, Btu · in/(h · ft^2 °F) [W/(m · K)]
L = lineal ft (m)
T_i = inside operating temperature, °F (°C)
T_s = outside ambient temperature, °F (°C)
R_i = bare pipe radius, in (m)
R_o = radius to insulated surface, in (m)
ln = natural logarithm

Heat transferred through cylindrical, or pipe insulation, geometry with multiple layers of insulation is most commonly represented by Eq. (B7.3) and Fig. B7.2.

$$Q = \frac{T_i - T_s}{\left[R_s \ln (R_1/R_i)\right]/K_1 + \left[R_s \ln (R_2/R_1)\right]/K_2 + \left[R_s \ln (R_s/R_2)\right]/K_3 + 1/f} \tag{B7.3}$$

where Q = total heat loss, Btu/(h · ft^2) (W/m^2)
k = thermal conductivity, Btu · in/(h · ft^2 · °F) [W/(m · K)]
T_i = inside operating temperature, °F (°C)
T_s = outside ambient temperature, °F (°C)
R_i = bare pipe radius, in (m)
R_1 = radius of outer surface of first layer in (m)
R_2 = radius of outer surface of second layer, in (m)
R_s = outside radius of outermost layer, in (m)
ln = natural logarithm
$1/f$ = surface resistance factor

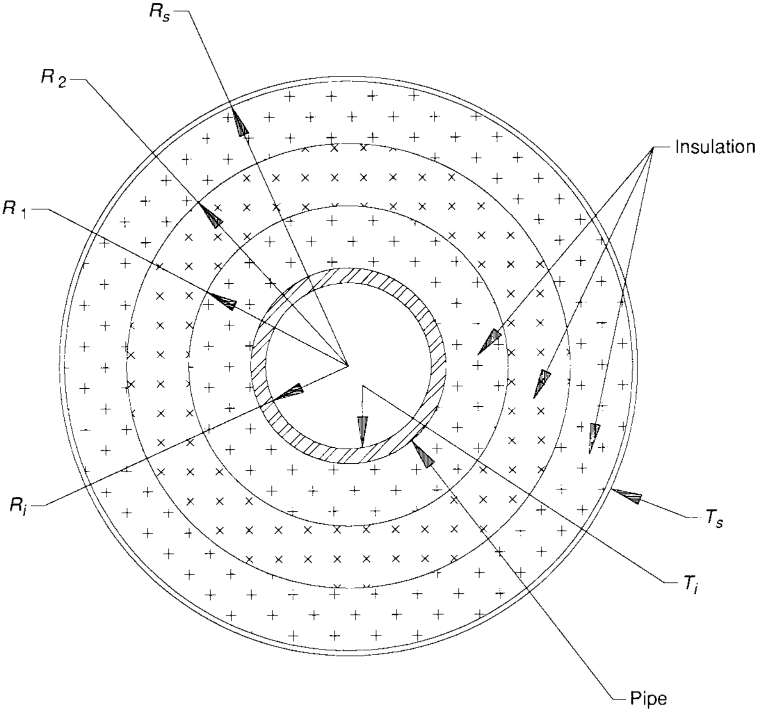

FIGURE B7.2 Cross-section of an insulated pipe with multiple layers.

Surface resistance is represented by the inverse of the air film (1/*f*) factor, as seen in Eqs. (B7.1) and (B7.3). When heat flows through a solid material and then out into another atmosphere (usually air), a resistance to heat flow created by the phase change at the interface between the two atmospheres is encountered at the surface separating the solid from the other atmosphere. Less heat will flow from the surface, therefore, than if no resistance were offered at this point.

In the case of good conductors of heat, surface resistance is the greater part of the total resistance of heat flow. In connection with efficient insulating materials, however, surface resistance is small compared with the resistance of the materials themselves.

Numerically, surface resistance is the reciprocal of the rate of heat transmission from surface to air. That is, if the rate of heat transmission from surface to air is 2.0 Btu/($\mathrm{ft}^2 \cdot {}^\circ\mathrm{F} \cdot \mathrm{h}$) ($\mathrm{W/m}^2$), the surface resistance is 0.5 ($\mathrm{h} \cdot \mathrm{ft}^2$)/Btu ($\mathrm{m}^2/\mathrm{W}$). A higher rate of heat transmission from the surface indicates a lower surface resistance, and vice versa.

Air velocity has a significant impact on surface resistance. Figure B7.3 shows values of surface resistance sufficiently accurate for use in insulation calculations, where the surface resistance is usually less than 25 percent and frequently less than 10 percent of the total resistance.

Thermal conductivity is a specific property of a homogeneous material. Its value is, like that of density, not dependent on the area, thickness, or shape of the material.

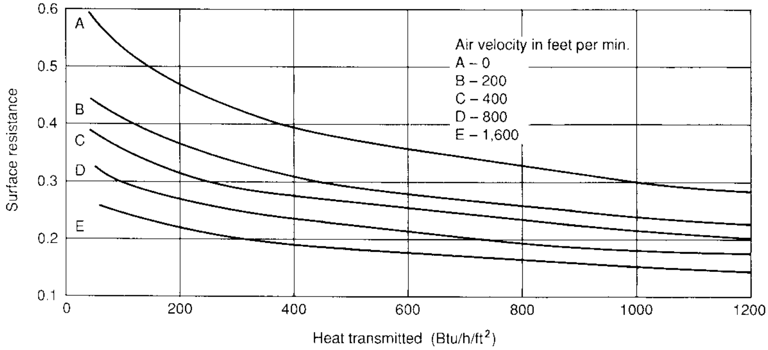

FIGURE B7.3 Surface resistance 1/*f* at various velocities.

It is a rate and is therefore unaffected by geometry. Heat transmission, however, is dependent upon the geometry of the body to be insulated and is predominantly governed by the length of the path (thickness).

Thermal conductivity is dependent upon temperature, but this is also true of other specific properties of a material, e.g., density. Standard test methods for determining thermal transmission properties of insulation materials are covered in

- ASTM Standard Test Method C177, *Steady-State Thermal Transmission (Properties by Means of the Guarded Hot Plate)*
- ASTM Standard Test Method C518, *Steady-State Thermal Transmission Properties by Means of the Heat Flow Meter*

In Table B7.1, conservative thermal conductivity values are shown for several commonly used industrial and commercial insulation materials. The thermal conduc-

TABLE B7.1 Properties and Limitations of Insulation Materials

Insulation material	Compressive strength (psi)	Maximum temperature (°F)	Minimum temperature (°F)	Permeability (perm · in)	Conductivity [Btu · in/(h · ft² · °F)] at 50°F, 200°F	Spread/smoke density index
Calcium silicate	100	1000	250	NA	NA, 0.43	0/0
Cellular glass*	87	900	−450	0.005	0.28, 0.37	5/0
Elastomeric foam	NA	200	−40	0.03	0.29, NA	25/50
Fiberglass	2.5 at 10%†	850	42	75	0.29, 0.39	25/50
Mineral wool	10 at 10%†	1200	42	150		
Expanded perlite	70	1000	250	18	NA, 0.52	25/50
Phenolic foam	22 at 10%†	300	75	6–7	0.15, 0.25	25/50
Polystyrene foam	25	165	−65	1–5	0.23, NA	NA
Polyurethane and polyisocyanurate	30	250	−200	2–4	0.17, NA	25/50

* For flat surfaces capped per ASTM C240 (hot asphalt, 15# felt).

† While compressive strength technically measures the stress at which a material fails under load, deformation monitors a material's structural distortion *with or without* actual failure. So, with compressible insulations, failure is recorded as the point at which an insulation's deformation reaches a percentage of its thickness—usually between 5 and 25 percent—for various densities.

tivity values are shown as a function of the mean temperature between the inner and outer surfaces of the insulation. This method of expressing thermal conductivities permits their use in the calculation of heat transfer through materials whether used singly or in combination with other materials.

DESIGN PARAMETERS

By providing a medium for retarding heat transfer, thermal insulation serves many useful functions in industrial and commercial piping applications. In specifying an insulation system, it is important to consider the parameters of your process and application needs. These are the whys of insulation system design. Why, or for what purpose, is the pipe going to be insulated? The following are some common design criteria used in insulation system design for piping applications:

- Controlling heat loss on hot piping
- Providing personnel protection
- Providing personnel comfort in commercial buildings
- Reducing heat gain on cold piping
- Limiting or retarding surface condensation
- Providing process control
- Economic optimization or energy conservation
- Providing fire protection
- Providing freeze protection
- Providing noise control

In many applications these criteria will overlap, and designing for one condition will benefit by the attainment of another. One example of such overlapping criteria occurs with the control of heat loss. In designing for a maximum heat loss of a given value, an added benefit may be that the surface temperature is sufficient to provide personnel protection. Another example of overlapping criteria is condensation control. In humid environments, when insulation is sized according to condensation control parameters, the added benefit will often be an economically optimum design for the reduction of heat gain on the cold pipe.

Environmental, physical, and mechanical conditions play an important role in insulation system design. Indoor applications, for example, generally do not require the complexity of design that outdoor applications require.

Similarly, below ambient designs are often more complicated than above ambient designs. The physical abuse and mechanical conditions that an insulation system is subject to are also important to consider in the design process.

The following paragraphs offer a brief explanation of the purpose of considering each of the above items.

Controlling Heat Loss on Hot Piping

The objective behind controlling heat loss on hot piping can be very narrow or, very broad in scope with multifaceted purposes. As mentioned in the introduction to this chapter, insulation in any application serves one primary function: to reduce the heat flow from one surface to another.

Some of the areas that are listed above fall into the category of controlling heat loss on hot piping, i.e.,

- Providing personnel protection
- Providing personnel comfort in commercial buildings
- Providing process control
- Economic optimization or energy conservation
- Providing freeze protection

One of the most important things to understand about this particular subheading, ‘‘Controlling Heat Loss on Hot Piping,’’ is the word *control.* Insulation, by itself, does not have the ability to *maintain* or *hold* temperature within a system. Insulation can only provide a means for control. Insulation can *limit, retard, reduce, minimize,* or *slow down* the rate at which heat flows through or out of the system, but it cannot stop the process. Insulation is merely a resistor to heat flow; it is not a barrier to heat flow.

Insulation *systems,* however, can be designed to maintain a body or a mass at a given temperature. These systems require the use of additional energy input from any of a number of possible sources. Some of the more obvious sources of additional energy input are heat-tracing, pressure, and flow rate. Heat tracing, pressurized systems, and flow dependent systems will be discussed later in this chapter.

Personnel Protection. When providing for personnel protection, only enough insulation is applied to protect individuals from being burned by the heat of the pipe surface. Traditionally the upper temperature limit of the surface of the insulation, used as a guide-line for personnel protection, was 140°F (60°C). In recent years, however, a more conservative design temperature for personnel protection is 125°F (52°C).

The ASTM Standard Guide C1055, *Standard Guide for Heated System Surface Conditions That Produce Contact Burn Injuries,*[2] indicates that the normal metabolism threshold pain level occurs at approximately 111°F (44°C). At this point and up to 140°F (60°C), potential injury is still considered to be reversible. The maximum level of pain occurs at approximately 140°F (60°C), at which point injury from skin contact may have irreversible effects.

To date, there are no mandates or statutes that govern any upper temperature limit for personnel protection. However, many industries have accepted or adopted 125°F (52°C) as a common practice.

In some design applications where there is clearly no justification for insulation and insulation could actually be a detriment to the process, the fabricated guards are employed to provide personnel protection.

In other cases, where guards are impractical and insulation is more appropriate, the insulation is applied only to the piping that is within 7 ft (2.1 m) of the ground or platform in high risk areas. In a situation such as this where the insulation does not continue beyond the protected area, it is very important that the insulation system be properly flashed and sealed to prevent water ingress, as shown in Fig. B7.4.

In designing an insulation system for personnel protection, the outer surface conditions become very important. In general, on hot piping, less insulation is required with a painted metal or mastic finish than if a shiny metal finish is used.

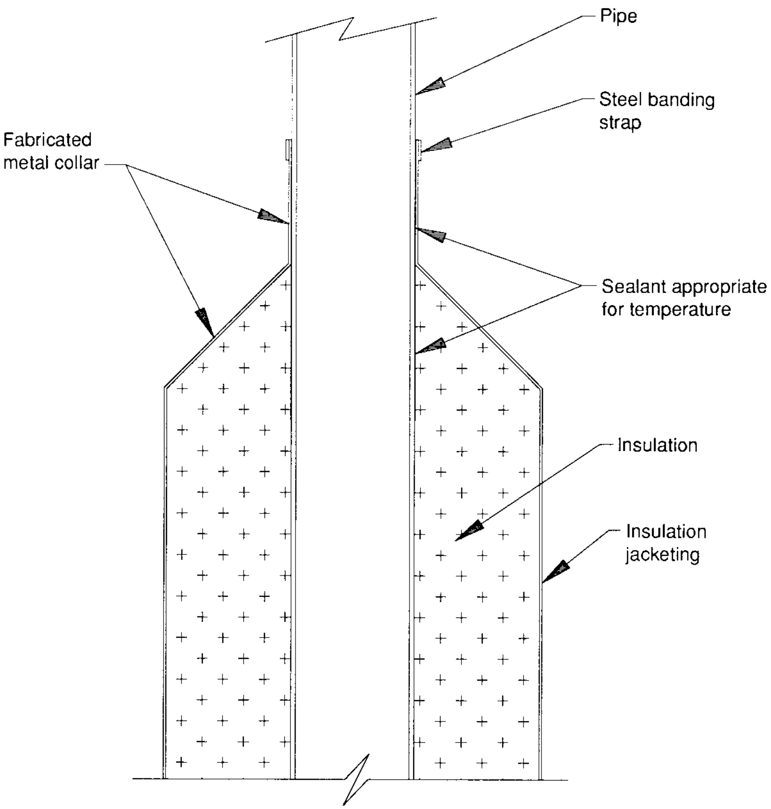

FIGURE B7.4 Flashing and sealing.

This is a direct function of the emissivity of the surface material. The emissivity of the surface material is a function of the material's reflectivity and absorptivity. The emittance of a surface material is determined on a scale where a reflective material, not emitting any infrared energy, is rated 0 and a nonreflective material, emitting all its infrared energy, is rated 1. Both limits are impractical to attain. Figure B7.5 simplifies the expression of emittance performance as it relates to personnel protection.[3]

In situations where solar loads are high, highly reflective metal jacketing materials reflect much of the radiant heat, thus causing surfaces which are too hot to touch. Dull, textured finishes such as fabric reinforced mastic will tend to absorb more of the radiant heat and thus have a higher emittance value, creating a surface condition which is cooler to the touch.

Wind conditions also make up an important design criterion in designing for personnel protection. In open areas in coastal regions, for example, there is usually a prevailing wind that can be considered in the insulation system design. In this situation, less insulation would be required than if the piping system were in an enclosed space sheltered from the wind.

This provides an additional source of heat loss—convection—which occurs at

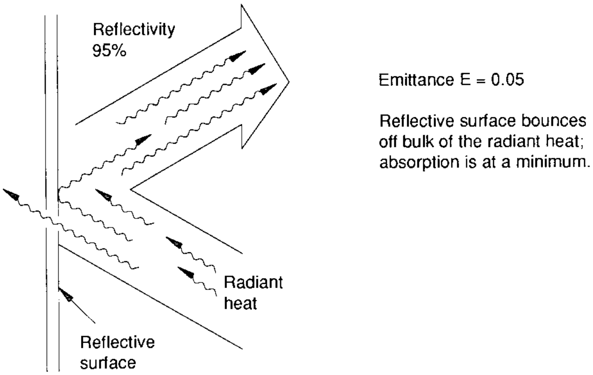
Reflectivity
95%
Emittance E = 0.05
Reflective surface bounces off bulk of the radiant heat; absorption is at a minimum.
Radiant heat
Reflective surface

FIGURE B7.5 Emissivity illustration.

the surface in this case. This heat loss cools the surface of the insulation; however, it also decreases the effectiveness of the overall insulation system.

When designing for personnel protection on hot piping, these factors must be considered:

1. What are the worst case ambient temperature and wind conditions the system will be subjected to? Consider the ambient conditions which will create the hottest surface temperature for each application, such as summer weather with no wind and a metal jacketing material. Note that when designing for worst case weather conditions, in *most* applications it is best to use the average worst case conditions (i.e., average summer weather, average summer wind). If the absolute worst case condition is used as the design criterion, the system will usually have an uneconomical and even impractical insulation thickness.

2. What is the risk factor with respect to location of the piping to human contact? Consider the potential of human contact. If there is no opportunity for human contact, then insulation for personnel protection may not be necessary. Limited human presence may only require a sign or a fabricated guard. Frequent human presence will require insulation for personnel protection. And frequent human contact will require a thorough investigation into the most efficient insulation system for personnel protection.

Providing Personnel Comfort in Commercial Buildings. In addition to personnel protection and in a similar capacity, insulation has traditionally been used to provide personnel comfort in enclosed spaces. Heat loss from hot piping in commercial and institutional buildings is primarily an economic consideration. Of course, heat loss into the environment in enclosed spaces can significantly impact the comfort of the personnel occupying the space; however, this heat is usually offset by the climate control systems.

For example, in hot summer conditions when air conditioning is required, heat loss into enclosed spaces will significantly impact the loads on air compressors and associated climate control equipment. The personnel occupying the space may never actually feel the heat loss from the piping, but it will be evidenced in higher equipment maintenance costs and utility bills.

When designing for personnel comfort in commercial buildings, these factors must be considered:

1. What are the worst case ambient weather conditions that the building will be subjected to? Generally when designing mechanical HVAC systems for commercial buildings, the worst case ambient temperature is taken as an average for the seasons. The worst case in Saskatoon, Saskatchewan, will be an average of the temperatures from December through March. The worst case in Miami, Florida, will be an average of the temperatures from June through September.
2. What will be the effect on the HVAC systems that will have to offset the heat loss? The additional energy requirement placed on evaporators, compressors, and water chillers can be substantial. Properly designing and insulating the hot water and chilled water lines in commercial buildings will help minimize this problem.

Process Control. Process control is a very critical design parameter in many industrial environments. Providing a stable temperature flow throughout a process system is in many cases more important than any other design criterion. For example, in the transport of liquid sulfur through a piping system, it is imperative that the temperature of the sulfur never drop below its freezing point. In this scenario, the time and energy required to get the frozen sulfur into a molten and flowing state again are more expensive than the cost to replace the transport piping altogether. In another example, providing a uniform temperature heat transfer medium (i.e., steam, synthetic heat transfer fluids, etc.) to a chemical reaction vessel is essential to a proper chemical reaction. Not enough heat or too much heat can completely change or even nullify the chemical reaction. In both these examples, the cost of improper consideration of process control requirements is significant.

In a paper entitled ‘‘Thermal Insulation Design Concepts,’’[4] Charles W. Sisler, of Monsanto, Inc., states the following relating to process control:

> Thermal insulation has a primary function of keeping the process of its equipment and piping hot enough or cold enough to meet operating requirements. This function takes precedence over all others when the following conditions must be controlled:
>
> 1. Process in elevated temperature service:
>   - ***a.*** Excessive reflux condensation in distillation equipment.
>   - ***b.*** Crystallization of solids on equipment or piping walls.
>   - ***c.*** Yield loss or product deterioration from excessive heat input or pressure build-up to compensate for heat loss.

Process control is important in any piping system; however, it is not always the controlling design parameter. For example, a loss of process control in a hot water heating system in a commercial building will probably not cause the building to shut down until the process is stabilized. It may require that the climate control system operate longer and that the energy input be greater than it would normally be; however, it could conceivably operate under these conditions indefinitely.

As a controlling design parameter, the loss of process control would cause system shutdown, significant product loss, process or product failure, or a significant health and safety hazard.

When designing for process control with respect to heat loss on hot piping, these factors must be considered:

1. What is the worst case ambient temperature that the system will be subjected

to? For process control purposes, the worst case ambient temperature is the one which will most adversely affect the process. On hot piping applications, this will be the average winter weather conditions for the geographic location of the facility.

2. What are the temperature limitations of the process being controlled? Evaluate the insulation system based on the amount of temperature change that the process can tolerate. This will play an important role in how much insulation is required to control the process.

3. What are the consequences in terms of cost and safety of lost process control? If the system is allowed to extend outside the temperature limitations of the process, what will happen? A good example is steam. When allowed to cool, steam will begin to condense inside the pipe. If this is allowed to get out of control, it can cause serious process problems. Liquids do not convey as well as gases, the presence of liquids can cause corrosion problems, and it requires more energy to keep the liquid hot than it does to keep the gas hot.

Economic Optimization or Energy Conservation. One of the most common reasons people think of for placing insulation on hot piping is *economic optimization.* Actually, however, it is much less common today than in the mid-1970s to see insulation used for this purpose.

Prior to the ''energy crisis'' of the early 1970s, thermal insulation used on hot piping applications served two primary purposes: personnel protection and process control. These two design parameters are discussed above.

When the cost of energy began to increase in the early 1970s, large energy and oil consumers began to look for a means to control costs. One of the most cost effective ways to control energy costs is to provide an efficient insulation system. An efficient insulation system is a theoretically static system surrounding a body such that the energy requirement to control the heat loss from that body is reduced by a given or predetermined design value.

To better understand this concept, it is useful to first examine heat losses from

TABLE B7.2 Heat Losses from Bare Surfaces

Hot surface temp (°F)	Temperature diff (°F)	Loss [Btu/(ft^2 · h)]	Hot surface temp (°C)	Temperature diff (°C)	Loss (W/m^2)
100	30	50	38	17	157
200	130	295	93	72	930
300	230	654	149	128	2,061
400	330	1,145	204	183	3,609
500	430	1,806	260	239	5,693
600	530	2,666	316	295	8,404
700	630	3,765	371	350	11,869
800	730	5,126	427	406	16,160
900	830	6,799	482	461	21,434
1,000	930	8,885	538	517	28.010
1,100	1,030	11,400	593	572	35,939
1,200	1,130	14,394	649	628	45,378
1,300	1,230	17,896	704	683	56,418
1,400	1,330	21,758	760	739	68,594
1,500	1,430	25,983	816	795	81,913

Still-air conditions, air temperature 70°F (21.1°C), surface emittance = 0.95.

bare surfaces. The rates of heat loss from bare surfaces at temperature differences up to 1000°F (538°C) are shown in Table B7.2. These are average values for still-air conditions, and although there is some variation for different pipe sizes and for different absolute temperatures of surroundings, these variations are small as compared with those caused by comparatively low air velocities. Therefore, these average values are sufficiently accurate for engineering purposes.

Heat losses expressed only in British thermal units (Btu) are not usually so significant as when expressed in actual costs in dollars. In Fig. B7.6, the equivalent losses in dollars per square foot per year (8760 h) have been shown for various temperatures per 1,000,000 Btu (292,000 W · h). [And 1,000,000 Btu (292,000 W · h) is approximately equivalent to 1000 lb of steam at 350°F and 150 psig.]

The value of energy per 1,000,000 Btu either is known or may be computed readily for a given fuel of known cost and a given efficiency. Thus, this procedure renders Fig. B7.6 applicable to a wide range of fuels and conditions.

To approximate the most economically optimal insulation thickness, first the operating conditions and the environmental conditions must be defined. The op-

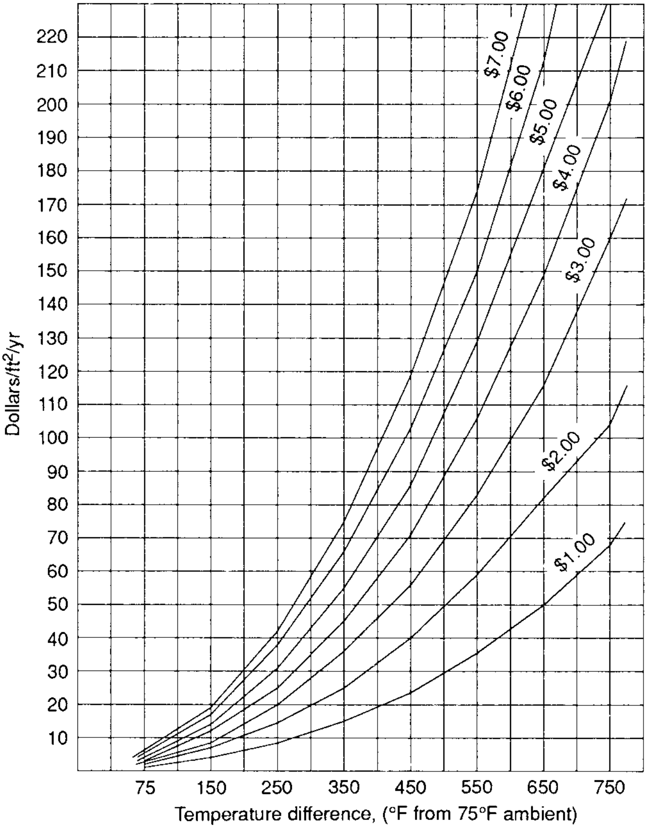

FIGURE B7.6 Equivalent loss in dollars per square foot at various fuel costs per 1,000,000 Btu.

erating conditions are the factors that make up the actual process (i.e., pipe size, contents, flow rate, operating temperature). The environmental conditions make up the atmosphere within which the insulated pipe will be operating (i.e., ambient temperatures, wind conditions, annual rainfall, humidity).

Example B7.1. Take as an example a 1-ft^2 surface area operating 7200 h/yr at 300°F (149°C) above the temperature of the surrounding air. Then the loss per year, at an energy value of $3.50 per 1,000,000 Btu, is $25.07 $\times$ 7200/8760= $20.60. Suitable insulation savings upward of 90 percent of this loss may be applied at a cost considerably less than 1 year's savings, when compared to the cost of the energy consumption required with no insulation at all. This illustrates the desirability of insulating such surfaces as boiler drum heads, manways, flanges, and fittings which are frequently left uninsulated, even though adjacent piping is provided with effective insulation.

The magnitude of losses from bare heated surfaces as compared with the relatively small losses from such surfaces when properly insulated is illustrated in Fig. B7.7. In this illustration, heat losses per degree of temperature difference from bare surfaces are shown by the upper curve, and heat losses from insulated surfaces are shown by the lower curve. The area between the two curves represents the savings due to insulation.

When designing for economic optimization with respect to heat loss on hot piping, these factors must be considered:

1. What are the average ambient temperature conditions that the system will be subjected to? In the case of economic optimization, processes are usually evaluated on an annual basis, or on a life cycle basis if operated only during portions of the year. Taking an average ambient condition over the course of time during which the process will be in operation will enable the designer to determine the economically efficient insulation thickness.

2. What are the operating temperatures of the process? Each range of temperatures that will be involved in the process should be evaluated on its own criteria. If the process swings through a range of temperatures (cyclical systems), the thickness should be based on the worst case condition on a time weighted basis.

3. What is the life expectancy of the system being designed? Life expectancy is a very important variable in the evaluation of economic insulation thickness. A longer life expectancy will justify a more sophisticated insulation system than a quick turnaround project.

4. Will insulation thicknesses specified for economic optimization be a detriment or an asset to efficient process control? In some cases, the insulation thickness required for economic optimization may not be ideally suited to process control. For example, in some very humid regions, the economic insulation thickness for a chilled water line may not be sufficient to provide adequate condensation control. Another example is hot piping in a quick turnaround project. The economic insulation thickness required to insulate a heat transfer pipe at 650°F (343°C) for a 2-yr life expectancy will be less than what is required to keep the heat transfer fluid at a uniform and stable condition. In both examples, the process control condition would prevail over the economic thickness.

Providing Freeze Protection. The final subject, as defined above, with respect to controlling heat loss is insulation system design for the prevention of freezing. Freeze

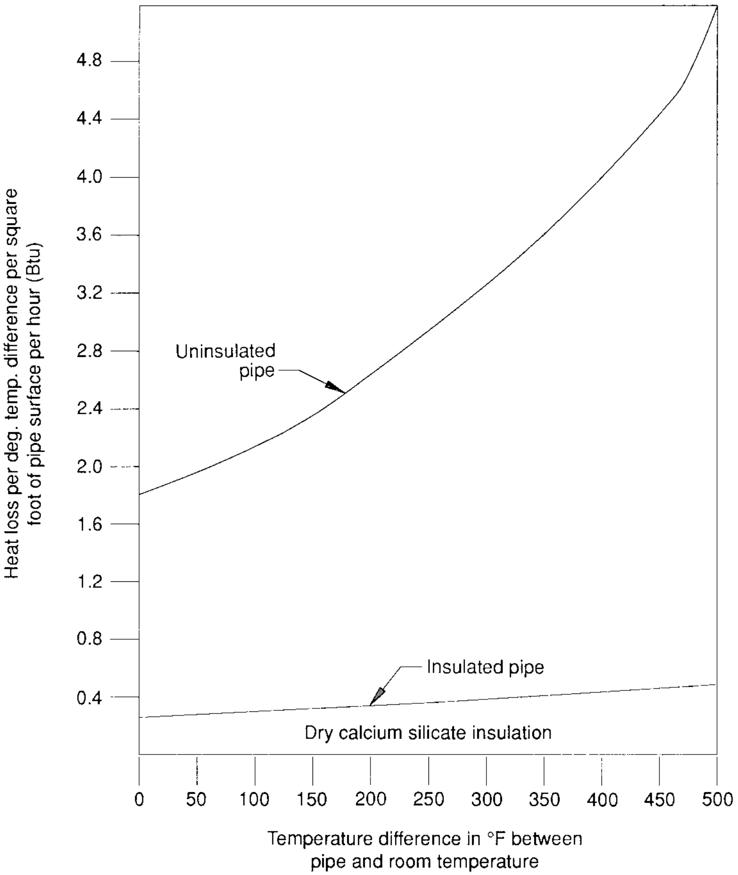

FIGURE B7.7 Heat-loss comparison.

protection can be provided by any of the following, but is usually a combination of three means:

1. Insulation thickness
2. Flow rate
3. Additional heat input

As mentioned earlier in this chapter, insulation alone cannot maintain a temperature. Regardless of the insulation thickness, if a fluid body is stagnant, there is no additional heat input, and the ambient temperature outside the pipe is below the freezing point of the fluid, then the fluid will eventually freeze. The thickness of the insulation can slow down the freezing process, but cannot stop it.

Fluid in motion takes much longer to freeze than stagnant fluid. Therefore, in the design of any freeze protection system, the flow rate must be factored in. If there is no flow during significant time intervals, consideration must be given to additional heat input.

Additional heat input is provided by means of various types of heat tracing. Typically there is steam, electric resistance tapes, and heat transfer fluids. Of these three, the most common application for piping purposes is electric resistance tapes. Additional heat input requirements are usually provided as a complimentary service of heat tracing manufacturers and by some, but not all, insulation manufacturers. Refer to Chap. B6 for heat tracing of piping.

When designing to provide for freeze protection, some of the factors that must be considered are as follows:

1. What is the worst case ambient temperature condition that the system will be subjected to? For freeze protection, the coldest temperature for the longest amount of time must be considered. For example, an underground water pipe that has to traverse a river on the underside of a bridge would have two ambient conditions: the ground temperature at the pipe depth and the winter weather conditions in the geographic location of the bridge.

If the bridge is in Houston, Texas, the worst case condition might be 30°F (−1°C) for 1 day with a 15 mph (24 kmph) wind. If the bridge is in Bemidji, Minnesota, the worst case condition might be −10°F (−23°C) with a 10 mph (16 kmph) wind for 20 days.

2. What is the lowest allowable operating temperature of the process? All liquids have different freezing temperatures. For example, water freezes at 32°F (0°C), but molten sulfur freezes at 120°F (49°C). Both would require freeze protection in Bemidji, but the water line may not require it in Houston.

3. What is the normal operating temperatue of the fluid? It is possible in many processes that the normal operating temperature of the fluid is higher than the freezing temperature. In a freeze protection evaluation, the time to reach a freezing temperature must be considered in addition to the time to freeze. In the case of the water line in Houston, the normal operating temperature of the water may be 55°F (13°C), and due to a possible drop in temperature, depending on the size of the pipe, it may not even reach 32°F (0°C) much less freeze before the temperature gets back up above 32°F (0°C).

4. What are the physical properties (i.e., density, specific heat) of the fluid? It is useful to know the physical properties of the fluid being protected if a detailed analysis is to be performed. For example, a high density fluid will take longer to reach its freezing point than a low density fluid.

5. What is the flow rate of the fluid? Fluid in motion (with enough pressure behind it) will not freeze. Therefore, in many applications if the liquid can be kept flowing, the use of insulation for the sole purpose of freeze protection can be eliminated. In most instances, however, it is when the flow is interrupted that the freeze protection is required.

6. What is the maximum downtime that the fluid might remain in a stagnant state? If the maximum downtime that the fluid is stagnant is less than the time required to freeze under the given design conditions, then insulation requirements can be reduced or eliminated.

Reducing Heat Gain on Cold Piping

In cold piping applications, the main objective of providing insulation is the reduction of heat gain. This process is most often evidenced in terms of providing process control and limiting or retarding surface condensation. The most important controlling factor in the effort to minimize heat gain on cold piping is the prevention of moisture migration into the insulation system, or water intake. This type of moisture migration will have a dramatic effect on system performance.

Process Control. As mentioned earlier in this chapter, in the explanation of process control as it relates to hot piping, process control is often the most important guiding criterion relating to insulation system design. In cold piping applications, this statement is even more paramount than in hot piping applications.

In most cold processes (with the exception of chilled water piping in climate control systems), the maximum allowable heat transfer for process control purposes is 30 to 40 $\mathrm{Btu/(h \cdot ft^2)}$ (95 to 126 $\mathrm{W/m^2}$). The consequences of exceeding this limit are so costly that a safety factor of 4 is frequently employed, resulting in a design limitation of 8 to 10 $\mathrm{Btu/(h \cdot ft^2)}$ (25 to 31.5 $\mathrm{W/m^2}$). By comparison, chilled water piping systems are usually designed around 40 to 50 $\mathrm{Btu/(h \cdot ft^2)}$ (126 to 158 $\mathrm{W/m^2}$), and hot water and steam systems are often designed around 100 $\mathrm{Btu/(hr \cdot ft^2)}$ (316 $\mathrm{W/m^2}$) or more.

In another example, liquefied gases must be kept below their boiling points. This is usually accomplished with a combination of pressure and insulation. If the temperature of the liquid gas is allowed to exceed the process control design parameters, the consequence is either a costly loss of gas through vaporization or a potentially hazardous buildup of pressure.

Cold piping systems are subject to degradation from the environment, more so than hot piping systems. This stems primarily from the direction of the vapor driving force in these applications. On hot systems, the water vapor driving force is away from the pipe, and although the ingress of water into the insulation can adversely affect the insulation performance, it is generally considered to be temporary. Conversely, on cold systems, the water vapor driving force is inward toward the pipe. The ingress of water, therefore, into the insulation system will gradually increase with time; it will slowly deteriorate and eventually destroy the system.

For these reasons, it is extremely important that the total insulation system design be very thoroughly thought out, to counteract the potential effects of the environment. The use of vapor barrier mastics and low permeability joint sealants is essential to adequate system performance. From a process control standpoint, these materials are just as important as the insulation itself to the performance of the process.

Limiting or Retarding Surface Condensation. Insulation systems can be designed to limit or retard surface condensation, but in most cases they cannot be designed to *prevent* condensation. In some very dry climates, insulation systems can be designed to prevent condensation most of the time; however, even in the driest desert, dew settles on the ground in the early morning hours. When dew settles on the surface of an insulation system, it is considered condensation.

In humid regions, it is not feasible to consider designing an insulation system to prevent condensation. In these areas the insulation thicknesses required of even the most efficient insulations available would be unrealistic from both a financial and a practical perspective.

Surface condensation can sometimes be a problem, primarily from a maintenance control perspective, but in the long term from an insulation efficiency standpoint as well. This is particularly a problem where absorptive insulation materials are present. Surface condensation can cause mold and mildew formation, which presents health and safety hazards. When metal jacketing is present, surface condensation can cause pitting and corrosion of the membrane. And when condensation is allowed to remain present for extended periods of time, it can cause membrane degradation, leading to moisture ingress into the insulation.

As with personnel protection, the outer membrane selected for limiting condensation plays an important part in providing good condensation control. The surface temperature of the insulation system is the controlling factor in how often condensation will form and how long it will be present.

When designing to limit or retard surface condensation, some of these factors should be considered:

1. What are the average summer ambient temperature and wind conditions (not worst case) that the system will be subjected to? For retarding surface condensation it is very important that the average summer conditions are used, not the worst case. This is because the worst case ambient weather conditions in the summer months, particularly in the coastal regions, are such that it is unrealistic to try to achieve condensation control. The insulation thicknesses required of even the most efficient insulations systems available are economically infeasible and impractical for worst case summer conditions.

2. What is the operating temperature of the process? The operating temperature of the process will have a significant effect on whether condensation control needs to be considered. For example, on a cryogenic pipeline the insulation required to provide process control will usually exceed the insulation thickness required to provide condensation control.

3. How important is condensation control in the overall performance of the process? In many outdoor conditions, condensation control is not a particularly important design criterion. Condensation does not present as much of a process problem as it does an aesthetic problem. In indoor or rooftop applications, condensation can be a problem as it represents building or structural degradation potential.

Providing Fire Protection

As a general rule, insulation materials are better suited for use as thermal insulation than as fire protection. However, the National Fire Protection Association (NFPA) and the American Petroleum Institute (API) acknowledge conditions under which some insulation materials may provide ‘‘credit’’ in the design and sizing of pressure relief valves. Accordingly, there are several test methods, some private and others public, which are used to determine the suitability of insulation materials for fire protection applications.

The Flammable and Combustible Liquids Code, NFPA 30,[5] states in section 2-2.5.7(a) that

> Insulation systems for which credit is taken shall meet the following performance criteria:
>
> **1.** Remain in place under fire exposure conditions.
> **2.** Withstand dislodgment when subjected to hose stream impingement during fire exposure. This requirement may be waived where use of solid hose streams is not contemplated or would not be practical.
> **3.** Maintain a maximum conductance value of 4.0 Btu/(h · ft^2 · °F) (W/m^2) when the outer insulation jacket or cover is at a temperature of 1660°F (904.4°C) and when the mean temperature of the insulation is 1000°F (537.8°C).

API Recommended Practice 521 requires the same basic performance criteria; however, it includes the following time limitation:

> Section 3.12.2.1 . . . This period of exposure may range from 20 minutes to one hour, depending on the adequacy of fire-fighting provisions, the accessibility of equipment, and the degree of skill and training of the fire-fighting group. . . .

In item 1 above, the requirement is that the insulation remain in place under the fire exposure conditions. This is usually accomplished by using a stainless steel jacketing material, of sufficient thickness (generally 0.015 in or greater) to withstand the flame intensity, with stainless steel banding and matching stainless steel clips.

Item 2 above is the hose stream dislodgment criterion. This criterion is not well defined in any text on this subject; however, API Recommended Practice 521,[6] section 3.12.2.2, states the following:

> The finished installation should ensure that the insulation will not be dislodged when subjected to the fire-water streams used for fire fighting, such as streams from hand lines or monitor nozzles, if installed.

Most insulations used in fire protection applications can withstand this criterion if jacketed and banded in place as described in the explanation of item 1 above.

Item 3 above requires a maximum conductance of 4.0 $\mathrm{Btu/(h \cdot ft^2 \cdot {}^\circ F)}$ ($\mathrm{W/m^2}$). Any insulation material suitable for use as fire protective insulation can meet this criterion.

Prior to specifying any insulation or accessory product material in a fire protection application, it is important to consult with the technical service department of the manufacturer and be advised of any special precautions that may be necessary.

Noise Control

Environmental acoustics is something that can be addressed in thermal insulation system design; however, serious noise problems should be treated as a separate and independent study. For the purpose of preliminary investigation, it is useful to know some basic concepts.

Sound absorption is both a process and a property of materials. Sound absorption is the process of dissipating sound energy as well as the property possessed by materials, objects, and structures, such as rooms, of absorbing sound energy. Sound attenuation is the reduction of the intensity of sound as it travels from the source to a receiving location.[2]

In thermal insulation design, sound attenuation is a natural by-product of the insulation application. Some insulation materials and accessory products provide greater sound attenuation due to their sound absorption characteristics than others. One of the best thermal insulation materials for sound attenuation is mineral wool. It is available in loose fill, rolls, blankets, boards, and preformed shapes. Therefore it can be applied in numerous different applications where sound absorption is a desired property of the insulation being applied.

The jacketing material used to cover the insulation can play an important role in sound attenuation. For example, a fabric reinforced mastic finish over insulation has better sound absorption properties than does a metal jacket. The environment in which the materials are being used will limit their ability to be considered for sound attenuation characteristics in some cases; however, with composite system design in the planning stage of the process, a combination of materials can often be arranged to provide both thermal and acoustical benefits.

DESIGN CONDITIONS

In addition to defining the purpose of the insulation system, it is important to define the conditions under which the insulation system will be used. Some of the conditions to be considered are

- Indoors or outdoors
- Conditioned space or nonconditioned
- Geographic location (coastal regions, northern climes, southern climes, rainy, dry, etc.)
- Long, straight runs or frequent bends
- Personnel traffic area or unaccessible
- Aboveground or below ground

Numerous conditions or combinations of conditions require consideration in insulation system design. The above list represents just a few of the more obvious ones. Most of these are self-explanatory; however, some require some attention to detail. Following is a brief explanation of each item.

Indoors or Outdoors

Indoor applications, in general, are much simpler to specify than outdoor applications. The main reason for this difference is that indoor applications are not subjected to rain, snow, and solar loads. Indoor applications are subjected to vapor pressure differential problems, as are outdoor; however, this problem is not complicated by the other environmental difficulties, as the outdoor applications are. The reason that rain, snow, and solar loads are such a problem with insulation systems is moisture migration. The single most detrimental element in any insulation system is the migration of moisture into the insulation system. Water in insulation destroys the insulating value. Approximately 4 percent moisture by volume in an insulation material will increase the thermal conductivity by as much as 70 percent.[7]

Thermal insulations must be dry to function according to design. Water in the insulation causes part of or all the air spaces and gas spaces in the insulation to be filled with water. Its conductivity then approaches that of water instead of that of air or gas. The thermal conductivity of water at 70°F (21°C) is 4.1 $\text{Btu} \cdot \text{in}/(\text{h} \cdot \text{ft}^2 \cdot {}^\circ\text{F})$ (0.59 W/mK, compared to 0.17 $\text{Btu} \cdot \text{in}/(\text{h} \cdot \text{ft}^2 \cdot {}^\circ\text{F})$ (0.0245 W/mK) for air. The heat transmission, therefore, is about 24 times greater for water saturated insulation than for dry insulation.[1]

In addition to this significant drop in thermal performance of the insulation, water in insulation when in contact with metal piping can significantly increase the chance of, and even contribute to, severe corrosion problems. Water and snow, therefore, should be avoided; every precaution should be taken to prevent moisture entry into the system. This is another reason why solar loads present problems in outdoor insulation systems.

As mentioned in the section addressing personnel protection, solar loads on the surface of the insulation can significantly increase its surface temperature, therefore increasing the risk of injury to personnel.

In addition to increasing surface temperature, solar loads on the surface of the insulation cause expansion and contraction of metal jacketing and premature aging of mastic finishes. The expansion and contraction of metal can cause joints to open up or ''fish-mouth,'' creating paths for water to enter. They can also cause a gradual loosening up of the bands, leading to a movement of the jacket or loss in high-wind conditions. Premature aging of mastic finishes can lead to cracks or pits in the finish, which also creates a path for water migration into the insulation system.

When designing for indoor or outdoor applications, consideration must be given to the environmental conditions that the system will be subjected to.

Conditioned Space or Nonconditioned Space

This application differs slightly from that of indoor and outdoor in that either space would be considered indoor; however, nonconditioned space is not climate controlled. This has the advantage of not having to worry about liquid water or solar loads; however, the vapor pressure driving force is still present. This driving force can have a significant detrimental effect on chilled water and other low-temperature piping insulation systems. Water vapor tends to migrate in the direction of the coldest surface. Therefore, any below ambient piping application will have a positive water vapor pressure in the direction from the outside of the insulation to the surface of the pipe. Example B7.1 illustrates how this might occur on a chilled water pipe in the unconditioned space of a commercial building in a relatively temperate climate.

Example B7.1. *Chilled Water Pipe Insulation Water Intake.* In this illustration, a calculation is done to show how a typical chilled water pipe insulated with 2 in (51 mm) of polyurethane insulation might become saturated with water simply due to the water vapor driving force generated by the ambient conditions around the pipe and the operating conditions of the pipe.

Calculation for Amount of Condensation per Linear Foot of Piping per Year:

	Nominal	Actual
Outside diameter (OD) of pipe:	NPS 2 (DN 50)	2.375 in (60 mm)
Service temperature:	41°F (5°C)	
Ambient air temperature:	70°F (21.1°C)	
Ambient air relative humidity:	70%	
Insulation thickness:	2-in (51-mm) nominal polyurethane	
OD of polyurethane insulation:	6.63 in (168.4 mm)	
Outside finish:	All service vapor retarding (ASJ; formerly vapor barrier jacket): permeance = 0.6 perm	
Permeability of polyurethane:	4.321 perm · in (10.96 perm · cm)	

Water vapor flow:

$$G = \frac{\Delta P}{R_{\text{vapor}}} \tag{B7.4}$$

where

G = water vapor flow

ΔP = water vapor pressure difference, inches of mercury (inHg) (mmHg)

R_{vapor} = resistance to vapor diffusion for any given material, 1 inch/perm (1 cm/perm) or μ

$$= \frac{\text{thickness}}{\text{permeability}} = \frac{\text{in} \cdot \text{ft}^2 \cdot \text{h} \cdot \text{inHg}}{\text{gr} \cdot \text{in}} = \frac{\text{mm} \cdot \text{cm}^2 \cdot \text{h} \cdot \text{mmHg}}{\text{gr} \cdot \text{mm}}$$

$$= \frac{1}{\text{permeance}} = \frac{\text{ft}^2 \cdot \text{h} \cdot \text{inHg}}{\text{gr}} = \frac{\text{cm}^2 \cdot \text{h} \cdot \text{mmHg}}{\text{gr}}$$

Calculation for Pressure Drop across Insulation System:

P_r in ambient air = real partial pressure of water vapor in air

$$= R_H \times P_s \tag{B7.5}$$

P_s = partial pressure of water vapor in saturated air

R_H = relative humidity = 0.07

At 70°F (21° C)

$$P_s = 0.73964 \text{ inHg}^{\dagger} \quad (18.79 \text{ mmHg})$$

$$P_r = 0.7 \text{ (relative humidity of 70\%)} \times 0.73964 \text{ inHg} \quad (18.79 \text{ mmHg})$$

$$= 0.517748 \text{ inHg} \quad (13.15 \text{ mmHg})$$

So with a real pressure at 70 percent relative humidity of 0.517748 inHg (13.15 mmHg), the dew point temperature t_s is found to be

$$t_s = 59.8^\circ\text{F} \quad (15.3^\circ\text{C})$$

At 41°F (5°C),

$$P_s = 0.25765 \text{ inHg} \quad (6.544 \text{ mmHg})$$

Therefore,

$$\Delta P = P_r - P_s = 0.517748 \text{ inHg} - 0.25765 \text{ inHg}$$

$$= 0.26010 \text{ inHg} \quad (6.61 \text{ mmHg}) \tag{B7.6}$$

---

†See Ref. 8.

From here, the actual thickness of insulation on the insulated pipe must be converted to an equivalent thickness of insulation in flat-plane geometry, in order to be used further in the calculation.

Equivalent Thickness of Insulation:

$$\begin{aligned}\text{Equiv. thickness} &= \frac{\text{OD}}{2}\ln\frac{\text{OD insulation}}{\text{OD pipe}}\\ &= \frac{6.63\text{ in}}{2}\ln\frac{6.63\text{ in}}{2.375\text{ in}} = \frac{168.4\text{ mm}}{2}\ln\frac{168.4\text{ mm}}{60.33\text{ mm}} \qquad \text{(B7.7)}\\ &= 3.403\text{ in} = 86.4\text{ mm}\end{aligned}$$

Total Resistance against Water Vapor Diffusion. Determining the total resistance against water vapor diffusion is simply a matter of adding the total resistances from materials in the path of the vapor flow. This is calculated as follows for the vapor retarder:

$$R_{\text{vapor}} = \frac{1}{0.6\text{ perm}} = 1.667\frac{1}{\text{perm}} \qquad \text{(either units)}$$

and for thermal insulation:

$$R_{\text{vapor}} = \frac{3.403}{4.321} = 0.788\text{ in/(perm}\cdot\text{in)} = 0.788\text{ cm/(perm}\cdot\text{cm)}$$

Therefore, the total resistance

$$\begin{aligned}R_{\text{vapor}} &= R_{\text{vapor}}\text{ (vapor retarder)} + R_{\text{vapor}}\text{ (thermal insulation)}\\ &= 1.667\frac{1}{\text{perm}} + 0.788\frac{1}{\text{perm}} \qquad \text{(B7.8)}\\ &= 2.455\frac{1}{\text{perm}}\end{aligned}$$

Now, given ΔP and R_{vapor}, we solve for G (water vapor flow) as follows, using Eqs. (B7.4), (B7.6), and (B7.8):

$$G = \frac{0.26010\text{ inHg}}{2.455\text{ perm}} = 0.1059\text{ inHg}\cdot\text{perm} = 2.7\text{ mmHg}\cdot\text{perm}$$

And

$$\begin{aligned}1\text{ perm} &= 1\frac{\text{gr}}{\text{ft}^2\cdot\text{h}\cdot\text{inHg}} = \frac{\text{ngr}}{\text{Pa}\cdot\text{s}\cdot\text{m}^2}\\ &= 0.1059\frac{\text{gr}}{\text{ft}^2\cdot\text{h}} = 2.7\frac{\text{ngr}}{\text{m}^2\cdot\text{s}}\end{aligned}$$

At this point the total vapor flow has been calculated and determined to be

$$0.1059\frac{\text{gr}}{\text{ft}^2\cdot\text{h}} = 2.7\frac{\text{ngr}}{\text{m}^2\cdot\text{s}}$$

The next step is to calculate the outside surface area in order to express the results in terms of square feet per lineal foot of insulation.

Calculation for the Outside Surface of Insulation Expressed in Square Feet per Lineal Foot:

$$6.63 \text{ in} \times \pi \times 12 \text{ in/ft} = 249.945 \text{ in}^2/\text{lin ft}$$

$$168.4 \text{ mm} \times \pi \times 1000 \text{ mm/m} = 592{,}044 \text{ mm}^2/\text{m}$$

or

$$\frac{249.945}{144} = 1.735 \text{ ft}^2/\text{lin ft} = \frac{592{,}044 \text{ mm}^2}{1{,}000{,}000} = 0.6 \text{ m}^2/\text{m}$$

And finally the calculation for the migration of water vapor that condenses in the system per year and per lineal foot of piping reveals the following:

$$\begin{aligned}\text{Total water migration} &= \text{water vapor flow } G \times \text{surface area per lineal foot} \times \\ &\quad \text{hours/day} \times \text{days/year} \\ &= 0.1059 \text{ gr/(ft}^2 \cdot \text{h)} \times 1.736 \text{ ft}^2/\text{ft} \times 24 \text{ h/d} \times 365 \text{ d/yr} \\ &\quad [2.7 \text{ ngr/(m}^2 \cdot \text{s)} \times 0.6 \text{ m}^2/\text{m} \times 86{,}400 \text{ s/d} \times 365 \text{ d/yr}] \\ &= 1610.46 \frac{\text{ngr}}{\text{yr} \cdot \text{lin ft}} \quad \left(5.1 \times 10^7 \frac{\text{ngr}}{\text{yr} \cdot \text{lin m}}\right) \qquad \text{(B7.9)}\end{aligned}$$

since

$$1 \text{ gr} = 1 \text{ lb}/7000 \qquad (64.8 \text{ mg})$$

and

$$1 \text{ lb} = 16 \text{ oz}$$

Therefore,

$$\frac{1610.46 \times 16}{7000} = 3.681 \frac{\text{gr} \cdot \text{lb} \cdot \text{oz}}{\text{yr} \cdot \text{lin ft} \cdot \text{gr} \cdot \text{lb}}$$

Or the total amount of water that can pass through the existing water vapor retarder and the thermal insulation system in this illustration equals:

$$3.681 \frac{\text{oz}}{\text{yr} \cdot \text{lin ft}} \qquad \left(104{,}354 \frac{\text{mg}}{\text{yr} \cdot \text{lin m}}\right)$$

As represented above in this example, a large amount of moisture can be accumulated in an insulation medium over a relatively short time if the insulation system is not designed to prevent the ingress of water vapor. Even with the best application procedures, incorrect materials selection for the environment or service requirements can have very dramatic results in terms of performance losses and maintenance costs.

Geographic Location

The geographic location of the system being insulated is very important to factor into the design process. The National Weather Service has information available for climates all over the world. Seasonal averages, worst case conditions, annual rainfall, average and worst case humidities, and any other climatic data needed should be fully evaluated during the specification process.

Long, Straight Runs or Frequent Bends

The layout of the piping with respect to bends and straight runs needs to be considered for the purpose of expansion and contraction control. Depending on the temperature range of the process piping being insulated, expansion and contraction joints in the insulation system may need to be employed.

The differential expansion between the metal substrate of the pipe and the insulation can have critical significance depending on the length of the pipe run. Table B7.3 lists different metals and their expansion and contraction in inches per 100 ft through various temperature ranges. It is clear that on long runs of piping, provision must be made for differential expansion between the insulation and the pipe. This is accomplished through the use of control joints or expansion joints. Many different types of control joints are used in insulation specifications. One system for controlling contraction on cold piping is illustrated in Fig. B7.8. It is advisable to consult the insulation manufacturer for more specific recommendations which are application-dependent.

TABLE B7.3 Thermal Expansion and Contraction Properties

Operating temperature (°F)	in/100 ft						
	Steel	Stainless steel	Copper	Cellular glass	Polyurethane insulation	Calcium silicate	Mineral wool
−200	−1.62	−2.51	−2.44	−1.0	−16.20	*	†
−100	−1.12	−1.76	−1.70	−0.75	−10.20	*	†
0	−0.50	−0.77	−0.73	−0.35	−4.20	*	†
200	0.99	1.46	1.51	0.68	7.80	*	NIA
400	2.70	3.80	3.89	1.82	*	NIA	NIA
600	4.60	6.24	6.40	3.07	*	Shrinks‡	Shrinks§
800	6.70	8.80	*	4.42	*	Shrinks	Shrinks
1000	8.89	11.48	*	†	*	Shrinks	Shrinks

* Material not recommended for use in this temperature range.

† Material requires special precautions for use in this temperature range. Consult manufacturer for recommendations.

‡ Calcium silicate experiences a maximum of 2 percent shrinkage at 1200°F and less than that at lower temperatures. Calcium silicate manufacturers recommend that their materials be double-layered for operating temperatures greater than 500°F due to shrinkage cracks that form.

§ ASTM C547, *Standard Specification for Mineral Fiber Preformed Pipe Insulation,* indicates linear shrinkage as below 2 percent in accordance with the recommended temperature limits. Vitrification and compaction of binder materials may occur at elevated temperatures.

NIA: no information available.

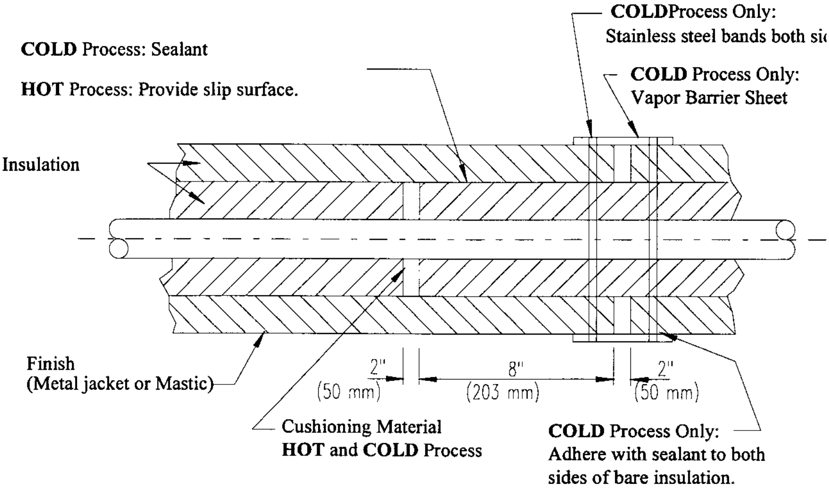
COLDProcess Only:
Stainless steel bands both si
COLD Process: Sealant
HOT Process: Provide slip surface.
COLD Process Only:
Vapor Barrier Sheet
Insulation
Finish
(Metal jacket or Mastic)
2" (50 mm)
8" (203 mm)
2" (50 mm)
Cushioning Material
HOT and COLD Process
COLD Process Only:
Adhere with sealant to both sides of bare insulation.

FIGURE B7.8 Cross-section of a contraction control joint.

Personnel Traffic Area

High traffic areas require insulation that can take abuse. Although it is standard practice to install "Do Not Walk on Pipe" signs anywhere this might occur, the real-world situation is that people walk on insulated pipes. It is important, therefore, to consider the use of high compressive strength insulations and/or heavy duty jacketing or membrane covering in these areas.

Aboveground or Below Ground

Aboveground insulation applications can be complicated and require thorough design evaluation and analysis for proper specification. Below ground applications are very complicated, and mistakes can be extremely costly. It is absolutely essential that every possible condition be considered and a thorough analysis of all variables be done.

The two most common means for accommodating underground piping applications that require thermal insulation are precast trenches and direct burial.

Precast Trenches. Precast trench systems provide a tunnel underground for the piping to be channeled through. In this type of application, the insulation system is generally designed exactly as it would be for an aboveground application. No special precautions are taken for expansion and contraction of the pipe because it is allowed to move freely within the trench, as any aboveground piping system would. The most important factor to keep in mind when designing an underground precast trench system is the groundwater.

Groundwater infiltration into the trench, depending on its magnitude can cause the piping system to become completely surrounded by water for extended periods. This can cause irreparable damage to protective membranes, it can cause the insulation to become saturated and literally fall off the pipe, and it can lead to serious corrosion problems. Consideration should be given to the use of impermeable-type insulation materials with sealants, adhesives, and covering materials appropriate for the service temperature of the piping being insulated.

Direct Burial. In direct-burial thermal insulation applications, most commonly, four types of systems are employed.

1. Preinsulated. Preinsulated piping systems for underground direct-burial applications generally consist of either plastic or steel piping which is covered with a foamed-in-place polyurethane insulation and then a high-impact-resistant formed plastic covering.

This type of application would look in cross section very much like the cross section shown in Fig. B7.1. These types of systems are most commonly employed in hot water and chilled water piping services. They are not recommended for use on steam lines owing to the temperature limitations of the insulation. They can be used on condensate return lines; however, caution must be exercised to avoid overheating. Some condensate return lines are used to evacuate steam which might be released from the primary steam supply line if there is a pressure relief requirement. If this occurs one time on a preinsulated piping system, it can permanently affect the performance of the insulation and its protective coverings.

2. Preinsulated Conduit with Annulus Airspace. Preinsulated conduit with annulus airspace (conduit systems) has for many years been the primary system used for steam lines by the U.S. government. Thorough analysis of underground direct-buried piping systems during the late 1950s and the 1960s revealed that almost no insulation system performed well. The reason was that groundwater infiltration into the insulation materials was able to get close enough to the piping to vaporize, and the underground steaming caused everything to deteriorate. This led to the development of a system that provided an airspace which theoretically allowed any moisture that might enter the system to vent out of the system, enabling the insulation to dry out after saturation. Figure B7.9 shows a cross section of a conduit system.

In actual application, it has been found that the annulus airspace is relatively ineffective in providing good moisture venting. However, these systems are still employed in many areas where high-temperature piping must be run underground and groundwater penetration is a concern.

3. Field-Installed. Field-installed insulation systems are one of the most cost-effective ways to insulate high-temperature lines which must be run underground. The most common material used for field installation is cellular glass, which can be used for operating temperatures up to 900°F (482°C). Cellular glass has a closed cell glass structure which resists penetration from any groundwater present. It is usually covered with an asphaltic membrane and sealed with sealants appropriate for the temperature range of the service piping.

With any of the above three direct-burial piping systems, it is very important to consider the location of all pipe anchors, in-line guides, and expansion loops. A thorough pipe stress analysis must be performed to avoid uncontrolled pipe movement, which will destroy any underground thermal insulation system. It is also extremely important to provide good drainage for the piping to try to minimize the potential of groundwater infiltration. Figure B7.10 illustrates this type of drainage recommendation. It is best to consult individual manufacturers for their recommendations with respect to application and design.

4. Pour-in Loose Fill. The most common type of pour-in loose-fill insulation for underground applications is calcium carbonate powder. This type of loose-fill insulation is poured directly into the trench after the pipe is in position. The pipe is propped up off the ground with wooden blocks to allow the calcium carbonate

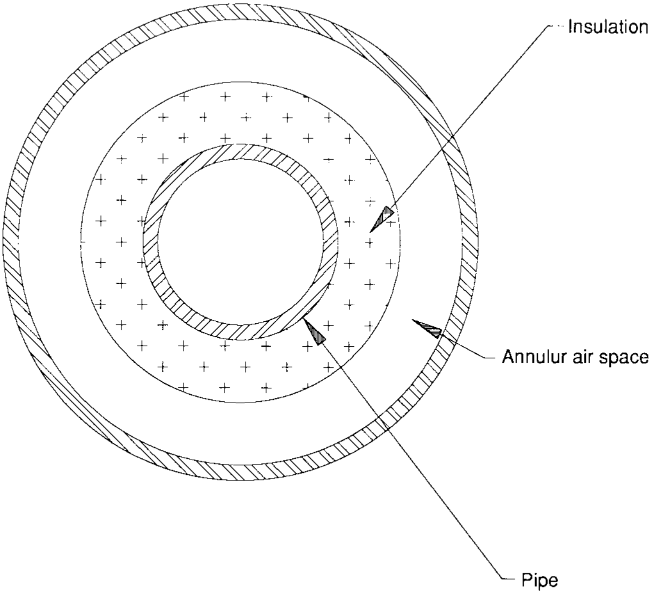
Insulation
Annulur air space
Pipe

FIGURE B7.9 Cross-section of a conduit system.

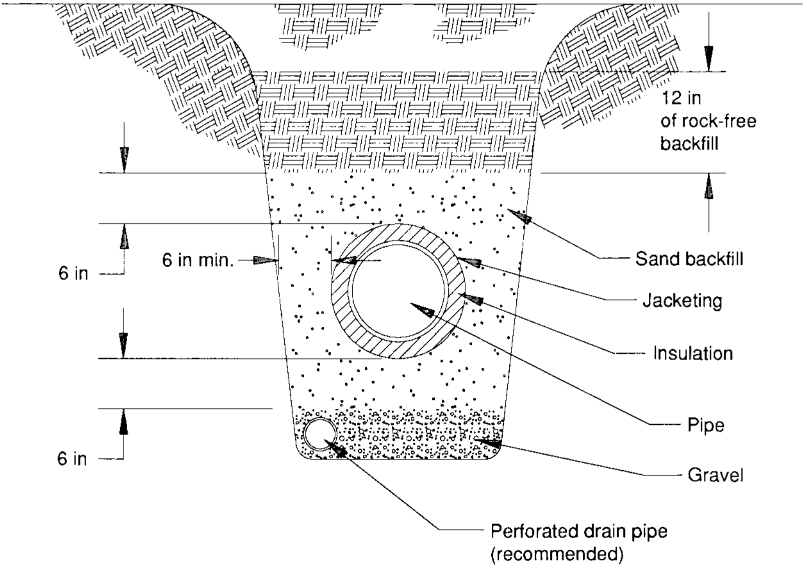
12 in
of rock-free
backfill
6 in
6 in min.
Sand backfill
Jacketing
Insulation
Pipe
6 in
Gravel
Perforated drain pipe
(recommended)

FIGURE B7.10 Backfill detail.

powder to fill in underneath. The powder is then tamped into place with a mechanical tamper. The plastic bags that the powder comes in are placed on top of the calcium carbonate prior to backfilling, to help prevent the migration of water into the insulation.

Having the above design parameter information available will allow the specifying engineer to make an educated decision about the thickness for the insulation system used. There are a number of useful sources for information on calculating insulation thickness requirements for various applications. A few of the more common sources for this type of information are:

- *ASHRAE Fundamentals Handbook*[8]
- *Annual Book of ASTM Standards,* volume 4.06, *Thermal Insulation; Environmental Acoustics*[2]
- *Thermal Insulation Handbook*[9]

Some examples of heat flow calculations are as follows: Example. B7.2 shows how heat gain would be calculated on a typical chilled water pipe in an enclosed space (representing commercial or institutional type of construction).

Example B7.2 Typical Chilled Water Pipe Calculation

Pipe size: NPS 2 (DN 50)
2.375 = in (60 mm) actual OD
Operating temperature: 42°F (5.5°C)
Ambient temperature: 95°F (35°C)
Insulation thickness: 2 in (51 mm) nominal
2.11 in (54 mm) actual
Insulation type: Cellular glass
Length of pipe: 120 lineal ft (36.5 m)

From Eq. (B7.2),

$$Q = \frac{2\pi K L (T_i - T_s)}{R_o \ln (R_o/R_i)}$$

where $K = 0.277$ Btu · in (h · ft^2 · °F) = 0.0225 Btu/(h · ft · °F) (at 50°F mean temp.)
[0.039 W/(m^2 · K) = 0.0038 W/(m · K)]
T_i = 42°F (5.5°C)
T_s = 95°F (35°C)
R_i = 2.375 in/2 (60 mm/2)
R_o = (6.62 in/2) (168 mm/2)

$$Q = \frac{2\pi [0.0255\ \mathrm{Btu/(h \cdot ft \cdot {}^\circ F)}](120\ \mathrm{ft})(42^\circ\mathrm{F} - 95^\circ\mathrm{F})}{6.62 \ln [(6.62/2)\ \mathrm{in}/(2.375/2)\ \mathrm{in}]}$$

$$= \frac{6.2832(0.0255\ \mathrm{Btu/h})(120)(-53)}{6.62 \ln (3.31/1.1875)}$$

$$= \frac{-1019.0\ \mathrm{Btu/h}}{6.786} = -150.2\ \mathrm{Btu/h}$$

Next, to determine the relative heat transfer with respect to area, the following calculation is used:

$$\text{Circumference} = \pi d = 3.14159(6.62\ \text{in}) = 20.80\ \text{in}$$

$$\text{Area} = \text{circumference} \times \text{length} = (20.80\ \text{in})(120\ \text{ft} \times 12\ \text{in/ft})$$
$$= 29{,}952\ \text{in}^2 = 208\ \text{ft}^2$$

So

$$-150.2\ \text{Btu/h}/208\ \text{ft}^2 = -0.72\ \text{Btu}/(\text{h} \cdot \text{ft}^2)$$

In this calculation, the minus sign in the final result indicates that the heat flow is in the direction of the pipe rather than away from the pipe. Therefore, there is a 0.72 Btu/(h · ft^2) heat gain in this illustration. And 0.72 Btu/(h · ft^2) is much greater than what would typically be employed for an application of this type, because chilled water piping cannot usually create a serious process upset condition. The thickness selected, therefore, is greater than is necessary, and further exploration of thickness requirements is needed.

The minimum thickness for cellular glass on a 2-in nominal pipe size pipe is 1 in (specified by cellular glass insulation manufacturers as a limiting factor for handling and durability). The calculation performed again using 1 in of cellular glass instead of 2 in reveals the following:

$$R_i = 2.375\ \text{in}/2 \qquad R_o = 4.50\ \text{in}/2$$

$$Q = \frac{2\pi[0.0255\ \text{Btu}/(\text{h} \cdot \text{ft} \cdot {}^\circ\text{F})](120\ \text{ft})(42^\circ\text{F} - 95^\circ\text{F})}{4.5 \ln[(4.50\ \text{in}/2)/(2.375\ \text{in}/2)]}$$
$$= \frac{6.2832(0.0255\ \text{Btu/h})(120)(-53)}{4.5 \ln(2.25/1.1875)}$$
$$= \frac{-1019.0\ \text{Btu/h}}{2.875} = -354.4\ \text{Btu/h}$$

Next, to determine the relative heat transfer with respect to area, the following calculation is used:

$$\text{Circumference} = \pi d = 3.14159(4.50\ \text{in}) = 14.14\ \text{in}$$

$$\text{Area} = \text{circumference} \times \text{length} = (14.14\ \text{in})(120\ \text{ft} \times 12\ \text{in/ft})$$
$$= 20{,}362\ \text{in}^2 = 141.4\ \text{ft}^2$$

So

$$\frac{-354.4\ \text{Btu/h}}{141.4\ \text{ft}^2} = -2.51\ \text{Btu}/(\text{h} \cdot \text{ft}^2)$$

A heat gain on chilled water piping of 2.51 Btu/(h · ft^2) is still conservative with respect to process control [it is typically 8 to 10 Btu/(h · ft^2) (25 to 31.5 W/m^2)]. The minimum thickness for this application therefore equals 1 in of cellular glass insulation.

Example B7.3 is a calculation of heat loss on a typical steam piping application.

Example B7.3 Typical Steam Pipe Calculation

Pipe size:	NPS 6 (DN 150) 6.625 in (168 mm) actual OD
Operating temperature:	400°F (204°C)
Ambient temperature:	75°F (24°C)
Insulation thickness:	2 in (51 mm) nominal 2.11 in (54 mm) actual
Insulation type:	Calcium silicate
Length of pipe:	75 lineal ft (22.8 m)

Using Eq. (B7.2) gives

$$Q = \frac{2\pi KL(T_i - T_s)}{R_o \ln(R_o/R_i)}$$

where $K = 0.501\ \text{Btu}\cdot\text{in}\ (\text{h}\cdot/\text{ft}^2\cdot{}^\circ\text{F})\ [0.072\ \text{W}/(\text{m}\cdot\text{K})]$ (at 165°F mean temp.)

$T_i = 400°\text{F}\ (204°\text{C})$

$T_s = 75°\text{F}\ (24°\text{C})$

$R_i = 6.625\ \text{in}/2\ (168\ \text{mm}/2)$

$R_o = 10.75\ \text{in}/2\ (273\ \text{mm}/2)$

$$Q = \frac{2\pi[0.501\ \text{Btu}/(\text{h}\cdot\text{ft}\cdot{}^\circ\text{F})](75\ \text{ft})\ (400°\text{F} - 75°\text{F})}{10.75 \ln[(10.75/2)/(6.625/2)]}$$

$$= \frac{76{,}729.5\ \text{Btu}/(\text{h}\cdot\text{ft})}{5.2\ \text{ft}} = 14{,}755.6\ \text{Btu/h}$$

Therefore,

$$\frac{14{,}755.6\ \text{Btu/h}}{75\ \text{ft}} = 196.7\ \text{Btu}/(\text{h}\cdot\text{ft})$$

$$\text{Circumference} = \pi d = 3.14159(10.75\ \text{in}) = 33.77\ \text{in}$$

Therefore, the total surface area per lineal foot of insulation equals

$$\text{Circumference} \times 12\ \text{in/ft} = 405.27\ \text{in}^2/\text{lin ft}$$

and

$$\frac{405.27\ \text{in}^2}{144\ \text{in}^2/\text{ft}} = 33.72\ \text{ft}^2/\text{ft}$$

$$\text{Heat loss} = \frac{196.7\ \text{Btu}/(\text{h}\cdot\text{ft})}{2.81\ \text{ft}^2/\text{ft}}$$

$$= 70\ \text{Btu}/(\text{h}\cdot\text{ft}^2)$$

For most hot processes, both from a process control perspective and accounting for personnel protection, a desirable heat-loss range is between 100 and 150 Btu/ $(\text{h}\cdot\text{ft}^2)$. Since 70 Btu/ $(\text{h}\cdot\text{ft}^2)$ is well below this rough guideline, it becomes necessary to perform the calculation again. Solving for the same parameters with 1.5 of calcium silicate instead of 2 in reveals the following:

$$Q = \frac{2\pi[0.501\ \text{Btu}/(\text{h}\cdot\text{ft}\cdot{}^\circ\text{F})](75\ \text{ft})(400^\circ\text{F} - 75^\circ\text{F})}{9.62\ln[(9.62/2)/(6.625/2)]}$$

$$= \frac{76{,}729\ \text{Btu}/(\text{h}\cdot\text{ft})}{3.58\ \text{ft}} = 21{,}432.7\ \text{Btu/h}$$

Therefore,

$$\frac{21{,}432.7\ \text{Btu/h}}{75\ \text{ft}} = 285.7\ \text{Btu}/(\text{h}\cdot\text{ft})$$

We solve for the surface area per lineal foot of insulation:

$$\text{Circumference} = \pi d = 3.14159(9.62\ \text{in}) = 30.22\ \text{in}$$

$$\frac{\text{Area}}{\text{Linear ft}} = \text{circumference} \times 12\ \text{in/ft} = 362.66\ \text{in}^2/\text{lin ft} = 2.51\ \text{ft}^2/\text{ft}$$

Therefore, the heat loss per square foot of surface area with the minimum amount of calcium silicate insulation is $[285.7\ \text{Btu}/(\text{h}\cdot\text{ft})]\ /\ (2.51\ \text{ft}^2/\text{ft}) = 113.8\ \text{Btu}/(\text{h}\cdot\text{ft}^2)$.

SERVICE CONSIDERATIONS

One other area that needs to be considered when properly designing an insulation system is the service that the piping is providing. Service is very important in designing insulation systems because of the different physical properties of the contents of the pipe. The following are some, but not all, generalized service types that are common to industrial and commercial construction:

- Hot water and chilled water
- Steam and condensate return
- Heat-transfer fluids
- Hot oils
- Liquefied gas (cryogenic service)
- Sanitary and sewerage water

Hot Water and Chilled Water. Hot water and chilled water lines are generally employed in commercial and institutional facilities as a means of providing climate control. The heated or cooled water is transported through a pipe loop system from the mechanical facilities room of the building or buildings and is used as a heat-transfer medium to provide either heating or cooling.

Geographic location is a very important consideration for this type of service. Insulation systems for chilled water piping in the state of Florida are very susceptible to problems with moisture infiltration. Insulation system design in this environment is of critical importance. The correct application of closed-cell impermeable insulation materials and highly flexible joint sealants with a vapor retarding membrane is necessary to the success of the entire mechanical system operation. Incorrect application and specification in an environment like this can cost thousands of dollars in mechanical system maintenance and repair, water damage from soggy, dripping insulation, and high utility costs from overworking the mechanical systems. In very dry, or arid, regions of the world, critical attention to the materials is not as paramount. Water vapor is not as great a threat.

Steam and Condensate Return. Steam and condensate return lines will operate without insulation. Therefore, the chance of a process failure or process upset condition due to a poorly insulated steam line is rather small. However, the savings that can be achieved by properly insulating steam lines are substantial. This is graphically illustrated in Fig. B7.8 in a heat loss comparison of an uninsulated surface and an insulated surface.

Before the energy crisis of the mid-1970s, most steam lines that were insulated were done so without consideration of energy costs. The main purpose was to protect personnel from the extreme temperatures of the surface of a bare steam line. These personnel protection insulation thicknesses, many of which are still in use today, are not adequate for providing optimum energy conservation. One technique used somewhat commonly today to increase energy conservation is often referred to as *retrofitting* the existing insulation system. A retrofit procedure involves the use of composite insulation systems and/or materials. To retrofit in this sense of the word is to take the existing insulation system that may have been underdesigned at the time and add an extra layer of insulation.

There are several benefits that can be obtained by retrofitting insulation in this fashion. First, the additional insulation will reduce energy consumption; therefore, operating costs will go down. Second, the increased insulation thickness will provide better personnel protection due to a significantly lowered surface temperature. And third, but most importantly, by creating a retrofit system, there is an opportunity to take advantage of the optimum performance benefits of more than one material. An illustration of this ability to optimize efficiencies is given below.

Figure B7.11 shows the crossover point between thermal conductivity and mean operating temperature of two common industrial thermal insulation materials: cellu-

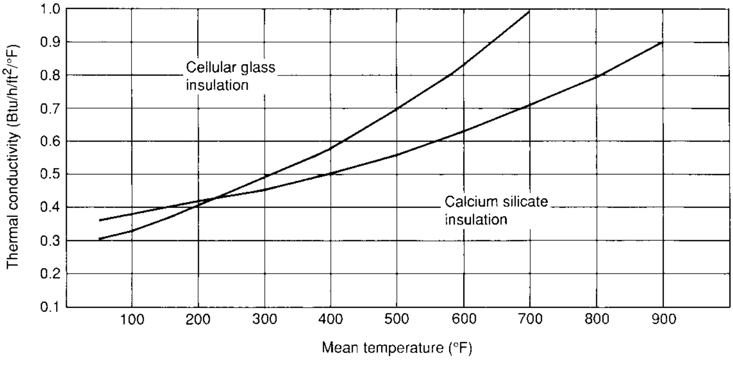

FIGURE B7.11 *K*-value crossover.

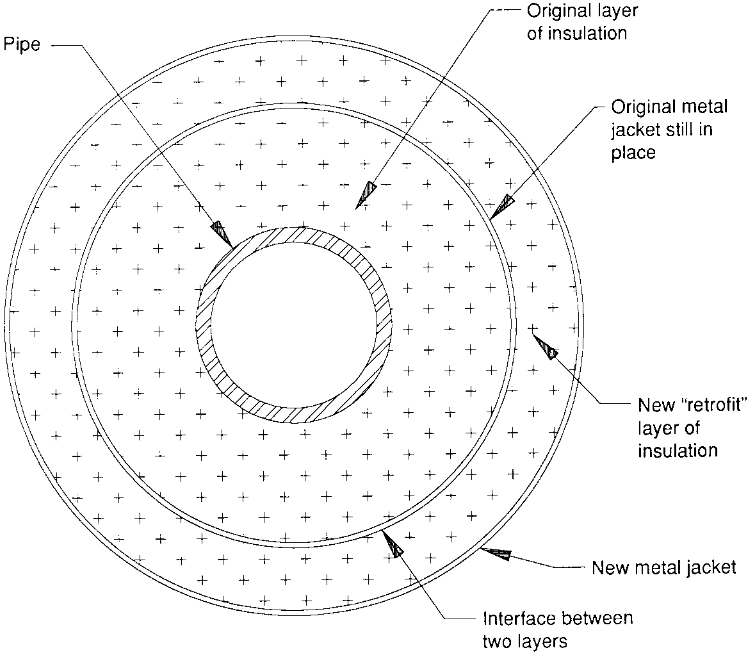
Pipe
Original layer of insulation
Original metal jacket still in place
New "retrofit" layer of insulation
New metal jacket
Interface between two layers

FIGURE B7.12 Cross-section of a retrofit system.

lar glass and calcium silicate. Figure B7.12 shows a cross-sectional view of what a typical retrofitted insulation system might look like and where the interface temperature will occur.

In this illustration, the crossover point of the two curves shows the ideal temperature at which each material's thermal performance characteristics can be maximized. The two curves cross over at a mean temperature of about 225°F (107°C). This shows that the cellular glass insulation has better thermal performance for mean operating temperatures at or below 225°F (107°C) and that the calcium silicate has better thermal performance for mean operating temperatures above 225°F (107°C). To maximize the performance of both materials, they can be used together in a composite retrofit system.

To use these two materials together and maximize their performance, the optimum interface temperature must be determined. The interface temperature is the point at which the two layers of insulation meet. Given that the crossover point between the two materials is at 225°F (107°C), the interface temperature can be determined by the calculation shown in Example B7.4.

Example B7.4 Desired Interface Temperature Calculation

Mean temperature = average temperature across insulation layer

In this example,

$$\text{Mean temperature} = \frac{\text{interface temperature} + \text{ambient temperature}}{2}$$

where mean temperature = 225°F (107°C)
ambient temperature = 70°F (21°C)

Therefore,

$$225^\circ\text{F} = \frac{\text{interface temperature} + 70^\circ\text{F}}{2}$$

$$2(225^\circ\text{F}) = \text{interface temperature} + 70^\circ\text{F}$$

$$2(225^\circ\text{F}) - 70^\circ\text{F} = \text{interface temperature}$$

$$\text{Desired interface temperature} = 380^\circ\text{F} \quad (193^\circ\text{C})$$

Determining the appropriate thickness for the new retrofitted layer of insulation, in this case cellular glass, is an iterative process. Knowing that the interface temperature should be approximately 380°F (193°C) provides a target point to work toward. The following example shows the calculation process by which the correct thickness can be determined.

Example B7.5 Retrofit Layer Thickness Calculation. In this example the following theoretical conditions will be employed:

Pipe size:	NPS 8 (DN 200), 8.625 in (219 mm) actual OD
Operating temperature:	600°F (315.5°C)
Ambient temperature:	70°F (21°C)
Calcium silicate thickness:	2 in (51 mm) nominal, 2.02 in (51.3 mm) actual

Equation (B7.5) will be used to find the actual interface temperature with the initial assumed insulation thickness of 2 in for the first iteration.

$$t_1 = t_i - Q\frac{R_s \ln (R_1/R_i)}{k_1} \tag{B7.10}$$

where Q = heat loss, Btu/(h · ft^2)
t_i = temperature of inner surface = 600°F (315.5°C)
t_1 = temperature of interface between layers, °F (°C)
t_s = temperature of ambient air = 70°F (21°C)
R_i = inner radius of first layer = 4.3125 in
R_1 = outer radius of first layer and inner radius of second layer = 6.375 in
R_s = outer radius of second layer = 8.50 in
k_1 = thermal conductivity of first layer
= 0.52 Btu · in (h · ft^2 · °F) [0.075 W/(m · K)]
ln = natural logarithm
$1/f$ = surface resistance factor = 0.53 (approximated from Fig. B7.3)

In solving for interface temperature t_2, the heat loss Q of the total retrofitted system must first be calculated. Using Eq. (B7.3), the heat loss for the first trial, assuming the initial iteration for the second layer with a nominal insulation thickness of 2 in, is as follows:

$$Q = \frac{t_i - t_s}{\dfrac{R_s \ln (R_1/R_i)}{k_1} + \dfrac{R_s \ln (R_s/R_1)}{k_2} + \dfrac{1}{f}} \tag{B7.11}$$

where k_2 = thermal conductivity of second layer
= 0.42 Btu · in/(h · ft^2 · °F) [0.061 W/(m · K)]

Thus

$$Q = \frac{600°\text{F} - 70°\text{F}}{\dfrac{8.50 \ln (6.375 \text{ in}/4.3125 \text{ in})}{0.52 \text{ Btu} \cdot \text{in}/(\text{h} \cdot \text{ft}^2 \cdot °\text{F})} + \dfrac{8.50 \ln (8.50 \text{ in}/6.375 \text{ in})}{0.42 \text{ Btu} \cdot \text{in}/(\text{h} \cdot \text{ft}^2 \cdot °\text{F})} + 0.53}$$

$$= \frac{530°\text{F}}{12.74 \text{ Btu}/(\text{h} \cdot \text{ft}^2 \cdot °\text{F})} = 41.60 \text{ Btu}/(\text{h} \cdot \text{ft}^2)$$

Therefore,

$$t_2 = 600°\text{F} - 41.60 \frac{(8.50 \text{ in}) \ln (6.375 \text{ in}/4.3125 \text{ in})}{0.52 \text{ Btu} \cdot \text{in}/(\text{h} \cdot \text{ft}^2 \cdot °\text{F})}$$

$$= 334.20°\text{F} \quad (168°\text{C})$$

Since this is lower than the desired interface temperature of 380°F (193°C), the iteration process can end at this step. To truly maximize the efficiency of the cellular glass and the calcium silicate, the next step would be to perform a second or third calculation with increasing thicknesses until an interface temperature at, or around, 380°F (193°C) is obtained. For this trial, however, the thickness of cellular glass used, 2 in, was sufficient to obtain a heat loss of 41.60 Btu/(h · ft^2) (131 W/m^2) which is well below what would normally be considered acceptable by today's standards for heat loss. If the interface temperature had come out greater than what was tried on the first iteration, the next step would have been to try again with a smaller thickness.

With an interface temperature of 334.2°F (168°C), the mean temperature can be recalculated to determine how close to the thermal conductivity crossover point the 2-in thickness provided. As shown above,

$$\text{Mean temperature} = \frac{\text{interface temperature} + \text{ambient temperature}}{2}$$

where interface temperature = 334.2°F (167.8°C) and ambient temperature = 70°F (21.1°C).

Therefore,

$$\text{Mean temperature} = \frac{334.2°\text{F} + 70°\text{F}}{2}$$

$$= 202.1°\text{F} \quad (94.5°\text{C})$$

This shows that the mean temperature across the outer layer of insulation is 202.1°F (94.5°C) which is only slightly below the crossover point.

Many old steam lines are insulated with a minimal amount of calcium silicate insulation. As mentioned earlier in this chapter, this was done during times when there was not a heightened sense of insulation awareness. For these types of applications, this retrofitting option is a very efficient way to revitalize old insulation systems.

Heat-Transfer Fluids. Heat-transfer fluids are liquids that are used as a means of providing process control. These liquids are generally thermally stable fluids. They can be heated or cooled to a given design temperature and transported to its desired process control point while maintaining temperature stability. Insulation system design for heat-transfer fluids must take into account the temperature range that the fluid will be operating at and whether it is a constant temperature or a cyclical temperature.

Many catalyst reaction reactor vessels operate at temperatures that swing from as low as −60°F (−51°C) to as high as 450°F (232°C). This type of cyclical service presents a complicated insulation system design dilemma. Generally, insulation systems are designed to withstand the rigid environmental and process temperature conditions at either hot or cold operating conditions. When the operating conditions are both hot and cold, a thorough study of all possible combinations of ambient conditions and operating variabilities must be conducted.

In cold process applications, the insulation materials specified are usually either plastic foam insulation or cellular glass insulation. In hot process applications, the insulation materials specified are usually mineral fiber insulation, calcium silicate insulation, or cellular glass insulation.

In applications where process temperatures swing from below ambient to hot process over the course of an operating cycle, the insulation system needs to be designed to account for both ends of the cycle. These applications are typically insulated with double or multiple layers of insulation material. It is important to insulate with the proper thickness. The critical aspect of this calculation is that the thickness must be calculated to achieve a thermal gradient in the hot condition that will not cause damage to the joint sealant in the outer layer that is necessary for the cold end of the process. Careful consideration of the appropriate sealants, adhesives, and accessory materials for the process must be given. It is advisable to consult with insulation manufacturer's technical support groups for recommendations for these types of processes.

Another important consideration in specifying insulation systems for heat-transfer fluids is fire safety. Many of the common heat-transfer fluids, whether organic or inorganic, can present a very serious fire hazard if they are absorbed into a permeable insulation material. It has been shown that some of these fluids, although thermally very stable at their peak operating temperatures, become much less so when absorbed into insulation materials. Spontaneous heating is the problem. Another term for the condition is auto-ignition. Monsanto Industrial Chemicals Company manufactures a product called Therminol which is a very useful and highly effective heat-transfer fluid. In the Therminol technical data sheet a description of the problem is offered:[10]

> Organic heat transfer fluids such as Therminol exhibit a slow oxidation reaction with air in the presence of insulating materials when system temperatures are above 500°F (260°C). Porous insulation material such as calcium silicate offers a large reaction surface in the face of poor heat dissipation conditions, and this, along with possible catalysis from the insulation material can cause a temperature build-up. This temperature build-up can result in ignition of the fluid when the saturated insulation is exposed to air (i.e., should the insulation be opened for repair, etc.).

> This phenomenon is not fully understood, but appears not to occur with cellular glass, possibly because of its closed cell structure. Cellular glass should be used in all areas where leakage is a possibility and the system temperature is greater than 400°F (240°C).

There are numerous other reference which relate similar, if not identical, information about this problem and the precautions that need to be taken in the design and application process. The Bibliography for this chapter contains a number of references on this subject. As in the case of cyclical service, it is important to contact the manufacturer before writing the insulation system specification for high-temperature heat-transfer fluid applications. The manufacturers of the heat-transfer fluid should also be consulted for their own precautions and recommendations.

Hot Oils. Hot oil piping and equipment applications require the same attention to detail as do heat-transfer fluids with respect to insulation system design. For hot oils, even though they frequently do not operate at the temperature extremes of heat-transfer fluids, the auto-ignition can be just as serious. Fires have occurred in oils at temperatures as low as 176 to 302°F (80 to 150°C), in coal tar distillates at temperatures as low as 212 to 482°F (100 to 250°C), and in mineral oils at temperatures as low as 392 to 572°F (200 to 300°C).[11]

Liquefied Gas (Cryogenic Service). Cryogenic temperatures range from −40°F (−40°C) down to absolute zero (−459°F, or −273°C). In this temperature range, the primary concern is the prevention of water vapor migration toward the pipe surface. Water vapor that is allowed to enter the insulation system will rapidly destroy the thermal performance of the insulation.

Cryogenic piping is usually insulated in multiple layers. The best vapor barrier joint sealants available remain flexible only down to a temperature of about −80°F (−62°C); therefore the inner layer of insulation is usually left unsealed. The outer layer or layers are completely sealed with vapor barrier joint sealants, and the final layer of insulation is usually covered with a vapor barrier mastic or membrane.

Plastic foam insulation must be covered with a complete vapor barrier envelope. Cellular glass insulation is sometimes just vapor-sealed over the joints and then covered with a weather barrier.

At extreme cryogenic temperatures, there is also the possibility of condensation of oxygen. This can occur anywhere below −290°F (−179°C). The National Fire Protection Association states[12]

> Liquid oxygen is the most concentrated common source of oxygen. Contamination of liquid oxygen with most organic substances often renders the mixture subject to violent explosion.
>
> An inadvertent oxygen enriched atmosphere can be created within insulation on piping and equipment containing materials at temperatures below the condensation temperature of oxygen (e.g., liquid hydrogen or nitrogen), if the oxygen in the atmospheric air is condensed within the insulation.

Therefore, there is a risk of liquid oxygen explosion with organic insulation materials and accessory products. Organic foam insulations, if used in the potential presence of condensing oxygen, require that the foam must be protected by a gas-impermeable membrane.[13]

Sanitary and Sewerage Water. Water lines and sewerage lines are generally insulated only as a means to prevent freezing. All the considerations appropriate for freeze protection requirements discussed earlier in this chapter should prevail.

MATERIALS

There are many different types of insulation materials available for both commercial and industrial piping applications. There are in fact too many to discuss in detail here. For the purposes of this chapter, a few of the more common commercial and industrial piping insulation types, or classifications, will be described. The following list, sorted alphabetically, comprises the material classifications most common to the industrial and commercial piping industry:

- Calcium silicate insulation
- Cellular glass insulation
- Elastomeric foam insulation
- Fiberglass and mineral wool insulations
- Perlite insulation
- Phenolic foam insulation
- Polystyrene foam insulation
- Polyurethane and polyisocyanurate foam insulations

Table B7.1 illustrates some of the properties of insulation materials that are commonly referred to in the insulation material selection process. Table B7.4 through Table B7.16 provide thickness guidelines for the materials referenced in

TABLE B7.4 Calcium Silicate Insulation Thickness Table
Recommended thickness table
Surface emittance = 0.4 Average wind velocity = 5.0 mph
Hot pipe worst-case ambient temperature of 90.0°F for a surface temperature of 140.0°F or less

Temperature (°F)	Nominal pipe size (NPS)													
	0.5	1.0	1.5	2.0	3.0	4.0	6.0	8.0	10.0	12.0	16.0	18.0	24.0	Flat
	Calcium silicate thickness (in)													
200.0	1.0	1.0	1.0	1.0	1.0	1.0	1.0	1.5	1.5	1.5	1.5	1.5	1.5	1.5
300.0	1.0	1.0	1.0	1.0	1.0	1.0	1.0	1.5	1.5	1.5	1.5	1.5	1.5	1.5
400.0	1.0	1.0	1.0	1.0	1.0	1.0	1.0	1.5	1.5	1.5	1.5	1.5	1.5	1.5
500.0	1.0	1.0	1.0	1.5	1.5	1.5	1.5	1.5	1.5	1.5	2.0	2.0	2.0	2.0
600.0	1.5	1.5	1.5	1.5	1.5	2.0	2.0	2.0	2.0	2.0	2.5	2.5	2.5	2.5
700.0	1.5	1.5	2.0	2.0	2.0	2.0	2.0	2.5	2.5	2.5	3.0	3.0	3.0	3.5
800.0	1.5	2.0	2.0	2.0	2.5	2.5	3.0	3.0	3.0	3.0	3.5	3.5	3.5	4.0
900.0	2.0	2.0	2.0	2.5	3.0	3.0	3.5	3.5	3.5	4.0	4.0	4.0	4.5	5.0
1000.0	2.0	2.5	2.5	3.0	3.0	3.5	3.5	4.0	4.0	4.5	4.5	5.0	5.0	6.0

Maximum heat flow = 115.1 Btu/(h · ft^2) (highest heat flow of any in the table).

TABLE B7.4M Calcium Silicate Insulation Thickness Table
Recommended thickness table
Surface emittance = 0.4 Average wind velocity = 8 km/h
Hot pipe worst-case ambient temperature of 32°C for a surface temperature of 60.0°C or less

Temperature (°C)	Diameter nominal (DN)													
	(15)	(25)	(40)	(50)	(80)	(100)	(150)	(200)	(250)	(300)	(400)	(450)	(600)	Flat
	Calcium silicate thickness (mm)													
75	25	25	25	25	25	25	25	38	38	38	38	38	38	38
100	25	25	25	25	25	25	25	38	38	38	38	38	38	38
150	25	25	25	25	25	25	25	38	38	38	38	38	38	38
200	25	25	25	38	38	38	38	38	38	38	38	38	38	38
250	25	25	25	25	38	38	38	38	38	38	51	51	51	51
300	25	38	38	38	38	38	51	51	51	51	64	64	64	64
350	38	38	38	38	51	51	51	64	64	64	64	76	76	76
400	38	38	51	51	64	64	64	64	76	76	76	89	89	102
450	51	51	51	64	64	76	76	76	89	89	102	102	102	114
500	51	51	51	64	76	76	89	89	102	102	114	114	114	127
550	64	64	64	76	89	89	102	102	114	114	127	127	127	152

Maximum heat flow = 378.1 W/m^2 (highest heat flow of any in the table).

Table B7.1. Tables B7.17 through Table B7.22 provide thermal conductivity data for each of these materials. It is important to remember that the properties of the material alone should not control the specification process. It is the combined properties of the insulation material and the corresponding accessory products that make up the total system that should control.

TABLE B7.5 Calcium Silicate Insulation Thickness Table
Recommended thickness table
Surface emittance = 0.4 Average wind velocity = 5.0 mph
Hot pipe worst-case ambient temperature of 80.0°F for a surface temperature of 140.0°F or less

Temperature (°F)	Nominal pipe size (NPS)													
	0.5	1.0	1.5	2.0	3.0	4.0	6.0	8.0	10.0	12.0	16.0	18.0	24.0	Flat
	Calcium silicate thickness (in)													
200.0	1.0	1.0	1.0	1.0	1.0	1.0	1.0	1.5	1.5	1.5	1.5	1.5	1.5	1.5
300.0	1.0	1.0	1.0	1.0	1.0	1.0	1.0	1.5	1.5	1.5	1.5	1.5	1.5	1.5
400.0	1.0	1.0	1.0	1.0	1.0	1.0	1.0	1.5	1.5	1.5	1.5	1.5	1.5	1.5
500.0	1.0	1.0	1.0	1.0	1.0	1.0	1.5	1.5	1.5	1.5	1.5	1.5	1.5	2.0
600.0	1.0	1.0	1.5	1.5	1.5	1.5	1.5	1.5	2.0	2.0	2.0	2.0	2.0	2.5
700.0	1.5	1.5	1.5	1.5	1.5	2.0	2.0	2.0	2.0	2.0	2.5	2.5	2.5	3.0
800.0	1.5	1.5	2.0	2.0	2.0	2.0	2.5	2.5	2.5	2.5	3.0	3.0	3.0	3.5
900.0	1.5	2.0	2.0	2.0	2.5	2.5	3.0	3.0	3.0	3.0	3.5	3.5	3.5	4.0
1000.0	2.0	2.0	2.0	2.5	2.5	3.0	3.0	3.5	3.5	3.5	4.0	4.0	4.0	5.0

Maximum heat flow = 138 Btu/(h · ft^2) (highest heat flow of any in the table).

TABLE B7.5M Calcium Silicate Insulation Thickness Table
Recommended thickness table
Surface emittance = 0.4 Average wind velocity = 8 km/h
Hot pipe worst-case ambient temperature of 27°C for a surface temperature of 60.0°C or less

Temperature (°C)	Diameter nominal (DN)													
	(15)	(25)	(40)	(50)	(80)	(100)	(150)	(200)	(250)	(300)	(400)	(450)	(600)	Flat
	Calcium silicate thickness (mm)													
75	25	25	25	25	25	25	25	38	38	38	38	38	38	38
100	25	25	25	25	25	25	25	38	38	38	38	38	38	38
150	25	25	25	25	25	25	25	38	38	38	38	38	38	38
200	25	25	25	25	25	25	25	38	38	38	38	38	38	38
250	25	25	25	25	25	25	38	38	38	38	38	38	38	38
300	25	25	25	38	38	38	38	38	38	38	51	51	51	51
350	25	38	38	38	38	38	51	51	51	51	64	64	64	64
400	38	38	38	38	51	51	51	64	64	64	64	76	76	76
450	38	38	51	51	51	64	64	64	76	76	76	76	89	89
500	38	51	51	51	64	64	76	76	76	89	89	89	102	114
550	51	51	51	64	76	76	89	89	89	102	102	102	114	127

Maximum heat flow = 474 W/m^2 (highest heat flow of any in the table).

Calcium Silicate Insulation. Calcium silicate is a very rigid, high-density material used exclusively for applications above 250°F (121°C). This insulation material has been a standard for high temperature applications for many years. Compressive strengths are very good, and it is noncombustible. It is suitable for temperatures from 250°F (121°C) up to 1000°F (538°C). Calcium silicate is manufactured from a

TABLE B7.6 Cellular Glass Insulation Thickness Table (Hot)
Recommended thickness table
Surface emittance = 0.4 Average wind velocity = 5.0 mph
Hot pipe worst-case ambient temperature of 90°F for a surface temperature of 140.0°F or less

Temperature (°F)	Nominal pipe size (NPS)													
	0.5	1.0	1.5	2.0	3.0	4.0	6.0	8.0	10.0	12.0	16.0	18.0	24.0	Flat
	Super_k™ FOAMGLAS® insulation,* inches													
200.0	1.0	1.0	1.0	1.0	1.0	1.0	1.0	1.5	1.5	1.5	1.5	1.5	1.5	1.5
300.0	1.0	1.0	1.0	1.0	1.0	1.0	1.0	1.5	1.5	1.5	1.5	1.5	1.5	1.5
400.0	1.0	1.0	1.0	1.0	1.0	1.0	1.0	1.5	1.5	1.5	1.5	1.5	1.5	1.5
500.0	1.0	1.0	1.0	1.5	1.5	1.5	1.5	1.5	1.5	1.5	2.0	2.0	2.0	2.0
600.0	1.5	1.5	1.5	1.5	2.0	2.0	2.0	2.0	2.5	2.5	2.5	2.5	2.5	3.0
700.0	1.5	2.0	2.0	2.0	2.5	2.5	2.5	2.5	3.0	3.0	3.5	3.5	3.5	4.0
800.0	2.0	2.0	2.5	2.5	3.0	3.0	3.5	3.5	3.5	4.0	4.0	4.0	4.5	5.0
900.0	2.5	2.5	3.0	3.0	3.5	3.5	4.0	4.5	4.5	5.0	5.0	5.0	5.5	6.5

Maximum heat flow = 116.7 Btu/(h·ft^2) (highest heat flow of any in the table).
*Super_k™ FOAMGLAS® insulation is a registered trademark of Pittsburgh Corning Corporation.

TABLE B7.6M Cellular Glass Insulation Thickness Table (Hot)
Recommended thickness table
Surface emittance = 0.4 Average wind velocity = 8 km/h
Hot pipe worst-case ambient temperature of 32°C for a surface temperature of 60.0°C or less

Temperature (°C)	Diameter nominal (DN)													
	(15)	(25)	(40)	(50)	(80)	(100)	(150)	(200)	(250)	(300)	(400)	(450)	(600)	Flat
	Super_k™ FOAMGLAS® insulation,* mm													
75	25	25	25	25	25	25	25	38	38	38	38	38	38	38
100	25	25	25	25	25	25	25	38	38	38	38	38	38	38
150	25	25	25	25	25	25	25	38	38	38	38	38	38	38
200	25	25	25	25	25	25	25	38	38	38	38	38	38	38
250	25	25	25	25	38	38	38	38	38	38	51	51	51	51
300	38	38	38	38	38	51	51	51	51	51	64	64	64	64
350	38	38	51	51	51	51	64	64	64	64	76	76	76	89
400	51	51	64	64	64	64	76	76	89	89	89	102	102	114
450	51	64	76	76	76	76	89	102	102	102	114	114	127	140
500	76	76	89	89	89	102	102	114	127	127	140	140	140	178

Maximum heat flow = 356 W/m^2 (highest heat flow of any in the table).
*Super_k™ FOAMGLAS® insulation is a registered trademark of Pittsburgh Corning Corporation.

slurry that is poured into molds to make various pipe-covering shapes. It is generally available in half sections, quad-sections, and flat blocks. Calcium silicate is applied to the piping with metal bands and generally covered with a metal jacket.

Cellular Glass Insulation. Cellular glass insulation is a high-strength, versatile insulation used in temperature services that range from −450°F (−268°C) up to

TABLE B7.7 Cellular Glass Insulation Thickness Table (Hot)
Recommended thickness table
Surface emittance = 0.4 Average wind velocity = 5.0 mph
Hot pipe worst-case ambient temperature of 80°F for a surface temperature of 140.0°F or less

Temperature (°F)	Nominal pipe size (NPS)													
	0.5	1.0	1.5	2.0	3.0	4.0	6.0	8.0	10.0	12.0	16.0	18.0	24.0	Flat
	Super_k™ FOAMGLAS® insulation,* inches													
200.0	1.0	1.0	1.0	1.0	1.0	1.0	1.0	1.5	1.5	1.5	1.5	1.5	1.5	1.5
300.0	1.0	1.0	1.0	1.0	1.0	1.0	1.0	1.5	1.5	1.5	1.5	1.5	1.5	1.5
400.0	1.0	1.0	1.0	1.0	1.0	1.0	1.0	1.5	1.5	1.5	1.5	1.5	1.5	1.5
500.0	1.0	1.0	1.0	1.0	1.0	1.0	1.5	1.5	1.5	1.5	1.5	1.5	1.5	2.0
600.0	1.0	1.0	1.5	1.5	1.5	1.5	2.0	2.0	2.0	2.0	2.0	2.5	2.5	2.5
700.0	1.5	1.5	1.5	1.5	2.0	2.0	2.0	2.5	2.5	2.5	3.0	3.0	3.0	3.0
800.0	1.5	2.0	2.0	2.0	2.5	2.5	3.0	3.0	3.0	3.0	3.5	3.5	3.5	4.0
900.0	2.0	2.0	2.5	2.5	3.0	3.0	3.5	3.5	4.0	4.0	4.5	4.5	4.5	5.0

Maximum heat flow = 143.4 Btu/(h·ft^2) (highest heat flow of any in the table).
*Super_k™ FOAMGLAS® insulation is a registered trademark of Pittsburgh Corning Corporation.

TABLE B7.7M Cellular Glass Insulation Thickness Table (Hot)

Recommended thickness table

Surface emittance = 0.4 Average wind velocity = 8 km/h

Hot pipe worst-case ambient temperature of 27°C for a surface temperature of 60.0°C or less

Temperature (°C)	Diameter nominal (DN)													
	(15)	(25)	(40)	(50)	(80)	(100)	(150)	(200)	(250)	(300)	(400)	(450)	(600)	Flat
	Super_k™ FOAMGLAS® insulation,* mm													
75	25	25	25	25	25	25	25	38	38	38	38	38	38	38
100	25	25	25	25	25	25	25	38	38	38	38	38	38	38
150	25	25	25	25	25	25	25	38	38	38	38	38	38	38
200	25	25	25	25	25	25	25	38	38	38	38	38	38	38
250	25	25	25	25	25	25	38	38	38	38	38	38	38	38
300	25	25	38	38	38	38	38	38	38	51	51	51	51	51
350	38	38	38	38	51	51	51	51	51	64	64	64	64	76
400	38	38	51	51	51	64	64	64	64	76	76	76	89	89
450	51	51	64	64	64	76	76	76	89	89	102	102	102	114
500	51	64	76	76	76	89	89	102	102	102	114	114	127	140

Maximum heat flow = 436 W/m^2 (highest heat flow of any in the table).

*Super_k™ FOAMGLAS® insulation is a registered trademark of Pittsburgh Corning Corporation.

900°F (538°C). Cellular glass insulation is all closed-cell glass with no organic binders or fillers. The closed-cell glass structure renders it impervious to liquid water and the driving force of water vapor pressure. It is manufactured in flat blocks which are then fabricated into any shape specified. Fabrication techniques are governed by ASTM Standard Recommended Practice for Inner and Outer Diameters of Rigid Thermal Insulation for Nominal Sizes of Pipe and Tubing. Cellular glass is

TABLE B7.8 Fiberglass Insulation Thickness Table (Hot)

Recommended thickness table

Surface emittance = 0.4 Average wind velocity = 5.0 mph

Hot pipe worst-case ambient temperature of 90°F for a surface temperature of 140.0°F or less

Temperature (°F)	Nominal pipe size (NPS)													
	0.5	1.0	1.5	2.0	3.0	4.0	6.0	8.0	10.0	12.0	16.0	18.0	24.0	Flat
	Fiberglass thickness (in)													
200.0	1.0	1.0	1.0	1.0	1.0	1.0	1.0	1.5	1.5	1.5	1.5	1.5	1.5	1.5
300.0	1.0	1.0	1.0	1.0	1.0	1.0	1.0	1.5	1.5	1.5	1.5	1.5	1.5	1.5
400.0	1.0	1.0	1.0	1.0	1.0	1.0	1.0	1.5	1.5	1.5	1.5	1.5	1.5	1.5
500.0	1.0	1.0	1.0	1.0	1.0	1.0	1.0	1.5	1.5	1.5	1.5	1.5	1.5	1.5
600.0	1.0	1.0	1.0	1.0	1.5	1.5	1.5	1.5	1.5	1.5	2.0	2.0	2.0	2.0
700.0	1.0	1.0	1.5	1.5	1.5	1.5	2.0	2.0	2.0	2.0	2.0	2.5	2.5	2.5
800.0	1.5	1.5	1.5	1.5	2.0	2.0	2.0	2.5	2.5	2.5	2.5	3.0	3.0	3.0
850.0	1.5	1.5	2.0	2.0	2.0	2.0	2.5	2.5	2.5	2.5	3.0	3.0	3.0	3.5

Maximum heat flow = 121.9 Btu/(h · ft^2) (highest heat flow of any in the table).

TABLE B7.8M Fiberglass Insulation Thickness Table (Hot)
Recommended thickness table
Surface emittance = 0.4 Average wind velocity = 8 km/h
Hot pipe worst-case ambient temperature of 32°C for a surface temperature of 60.0°C or less

Temperature (°C)	Diameter nominal (DN)													
	(15)	(25)	(40)	(50)	(80)	(100)	(150)	(200)	(250)	(300)	(400)	(450)	(600)	Flat
	Fiberglass thickness (mm)													
75	25	25	25	25	25	25	25	38	38	38	38	38	38	38
100	25	25	25	25	25	25	25	38	38	38	38	38	38	38
150	25	25	25	25	25	25	25	38	38	38	38	38	38	38
200	25	25	25	25	25	25	25	38	38	38	38	38	38	38
250	25	25	25	25	25	25	38	38	38	38	38	38	38	38
300	25	25	25	38	38	38	38	38	38	38	51	51	51	51
350	38	38	38	38	38	51	51	51	51	51	64	64	64	64
400	38	38	51	51	51	51	64	64	64	64	76	76	76	90
450	38	51	64	64	64	64	76	76	76	89	89	89	89	102

Maximum heat flow = 348.2 W/m^2 (highest heat flow of any in the table).

applied to cold piping in single or double layers and usually is used with a joint sealant and then covered with either a fabric-reinforced mastic or a metal jacket. On hot piping applications, cellular glass is applied to the pipe in single or double layers with metal bands. No sealants are used on hot applications. It is then covered with metal jacket.

TABLE B7.9 Fiberglass Insulation Thickness Table (Hot)
Recommended thickness table
Surface emittance = 0.4 Average wind velocity = 5.0 mph
Hot pipe worst-case ambient temperature of 80°F for a surface temperature of 140.0°F or less

Temperature (°F)	Nominal pipe size (NPS)													
	0.5	1.0	1.5	2.0	3.0	4.0	6.0	8.0	10.0	12.0	16.0	18.0	24.0	Flat
	Fiberglass thickness (in)													
200.0	1.0	1.0	1.0	1.0	1.0	1.0	1.0	1.5	1.5	1.5	1.5	1.5	1.5	1.5
300.0	1.0	1.0	1.0	1.0	1.0	1.0	1.0	1.5	1.5	1.5	1.5	1.5	1.5	1.5
400.0	1.0	1.0	1.0	1.0	1.0	1.0	1.0	1.5	1.5	1.5	1.5	1.5	1.5	1.5
500.0	1.0	1.0	1.0	1.0	1.0	1.0	1.0	1.5	1.5	1.5	1.5	1.5	1.5	1.5
600.0	1.0	1.0	1.0	1.0	1.5	1.5	1.5	1.5	1.5	1.5	1.5	1.5	2.0	2.0
700.0	1.0	1.0	1.5	1.5	1.5	1.5	2.0	2.0	2.0	2.0	2.0	2.0	2.5	2.5
800.0	1.5	1.5	1.5	1.5	2.0	2.0	2.0	2.5	2.5	2.5	2.5	3.0	3.0	3.0
850.0	1.5	1.5	2.0	2.0	2.0	2.0	2.5	2.5	2.5	3.0	3.0	3.0	3.0	3.5

Maximum heat flow = 146 Btu/(h · ft^2) (highest heat flow of any in the table).

TABLE B7.9M Fiberglass Insulation Thickness Table (Hot)
Recommended thickness table
Surface emittance = 0.4 Average wind velocity = 8 km/h
Hot pipe worst-case ambient temperature of 27°C for a surface temperature of 60.0°C or less

Temperature (°C)	Diameter nominal (DN)													
	(15)	(25)	(40)	(50)	(80)	(100)	(150)	(200)	(250)	(300)	(400)	(450)	(600)	Flat
	Fiberglass thickness (mm)													
75	25	25	25	25	25	25	25	38	38	38	38	38	38	38
100	25	25	25	25	25	25	25	38	38	38	38	38	38	38
150	25	25	25	25	25	25	25	38	38	38	38	38	38	38
200	25	25	25	25	25	25	25	38	38	38	38	38	38	38
250	25	25	25	25	25	25	25	38	38	38	38	38	38	38
300	25	25	25	25	25	25	38	38	38	38	38	38	38	38
350	25	25	38	38	38	38	38	38	38	51	51	51	51	51
400	38	38	38	38	38	51	51	51	51	51	64	64	64	76
450	38	38	51	51	51	51	64	64	64	64	76	76	76	89

Maximum heat flow = 428.5 W/m^2 (highest heat flow of any in the table).

Elastomeric Foam Insulation. Elastomeric foams are used almost exclusively in commercial, institutional, and residential facilities. It is used primarily on hot water and chilled water lines, or for water and sewer lines for freeze protection. Elastomerics are extruded into pipe dimensions and generally available in ½-in (13-mm), ¾-in (19-mm), and 1-in (25-mm) thicknesses. It is available in sheet form for equipment. These foams are usually taped, wired, or glued in place.

TABLE B7.10 Perlite Insulation Thickness Table (Hot)
Recommended thickness table
Surface emittance = 0.4 Average wind velocity = 5.0 mph
Hot pipe worst-case ambient temperature of 90°F for a surface temperature of 140.0°F or less

Temperature (°F)	Nominal pipe size (NPS)													
	0.5	1.0	1.5	2.0	3.0	4.0	6.0	8.0	10.0	12.0	16.0	18.0	24.0	Flat
	Perlite thickness (in)													
200.0	1.0	1.0	1.0	1.0	1.0	1.0	1.0	1.5	1.5	1.5	1.5	1.5	1.5	1.5
300.0	1.0	1.0	1.0	1.0	1.0	1.0	1.0	1.5	1.5	1.5	1.5	1.5	1.5	1.5
400.0	1.0	1.0	1.0	1.0	1.0	1.5	1.5	1.5	1.5	1.5	1.5	1.5	1.5	2.0
500.0	1.0	1.0	1.5	1.5	1.5	1.5	2.0	2.0	2.0	2.0	2.0	2.5	2.5	2.5
600.0	1.5	1.5	2.0	2.0	2.0	2.0	2.5	2.5	2.5	2.5	3.0	3.0	3.0	3.5
700.0	1.5	2.0	2.0	2.0	2.5	2.5	3.0	3.0	3.0	3.0	3.5	3.5	3.5	4.0
800.0	2.0	2.0	2.0	2.5	3.0	3.0	3.5	3.5	3.5	4.0	4.5	4.5	4.5	5.0
900.0	2.5	2.5	2.5	3.0	3.5	3.5	4.0	4.0	4.5	4.5	5.0	5.0	5.0	6.0
1000.0	2.5	3.0	3.0	3.5	4.0	4.0	4.5	4.5	5.0	5.5	5.5	5.5	6.0	7.0

Maximum heat flow = 122.3 Btu/(h · ft^2) (highest heat flow of any in the table).

TABLE B7.10M Perlite Insulation Thickness Table (Hot)

Recommended thickness table
Surface emittance = 0.4 Average wind velocity = 8 km/h
Hot pipe worst-case ambient temperature of 32°C for a surface temperature of 60.0°C or less

Temperature (°C)	Diameter nominal (DN)													
	(15)	(25)	(40)	(50)	(80)	(100)	(150)	(200)	(250)	(300)	(400)	(450)	(600)	Flat
	Perlite thickness (mm)													
75	25	25	25	25	25	25	25	38	38	38	38	38	38	38
100	25	25	25	25	25	25	25	38	38	38	38	38	38	38
150	25	25	25	25	25	25	25	38	38	38	38	38	38	38
200	25	25	25	25	25	25	38	38	38	38	38	38	38	51
250	25	25	38	38	38	38	51	51	51	51	51	51	51	64
300	38	38	38	38	51	51	51	64	64	64	64	64	76	76
350	38	51	51	51	64	64	64	64	76	76	89	89	89	102
400	51	51	51	64	64	76	76	76	89	89	102	102	102	114
450	51	64	64	64	76	76	89	89	102	102	114	114	114	140
500	64	64	64	76	89	89	102	114	114	127	127	127	140	165
550	64	76	76	89	102	102	114	127	127	140	152	152	165	191

Maximum heat flow = 366 W/m^2 (highest heat flow of any in the table).

Fiberglass and Mineral Wool Insulations. Fiberglass and mineral wool are actually two separate and distinct types of insulation; however, many of their applications and physical properties are similar. These products are generally used in hot applications, but with some restrictions they can be used in cold applications as well. Fiberglass is often used from chilled water piping temperatures up to a maximum

TABLE B7.11 Perlite Insulation Thickness Table (Hot)

Recommended thickness table
Surface emittance = 0.4 Average wind velocity = 5.0 mph
Hot pipe worst-case ambient temperature of 80°F for a surface temperature of 140.0°F or less

Temperature (°F)	Nominal pipe size (NPS)													
	0.5	1.0	1.5	2.0	3.0	4.0	6.0	8.0	10.0	12.0	16.0	18.0	24.0	Flat
	Perlite thickness (in)													
200.0	1.0	1.0	1.0	1.0	1.0	1.0	1.0	1.5	1.5	1.5	1.5	1.5	1.5	1.5
300.0	1.0	1.0	1.0	1.0	1.0	1.0	1.0	1.5	1.5	1.5	1.5	1.5	1.5	1.5
400.0	1.0	1.0	1.0	1.0	1.0	1.0	1.0	1.5	1.5	1.5	1.5	1.5	1.5	2.0
500.0	1.0	1.0	1.0	1.0	1.5	1.5	1.5	1.5	1.5	1.5	2.0	2.0	2.0	2.0
600.0	1.5	1.5	1.5	1.5	1.5	2.0	2.0	2.0	2.0	2.0	2.5	2.5	2.5	2.5
700.0	1.5	1.5	2.0	2.0	2.0	2.0	2.5	2.5	2.5	2.5	3.0	3.0	3.0	3.5
800.0	1.5	2.0	2.0	2.0	2.5	2.5	3.0	3.0	3.0	3.0	3.5	3.5	3.5	4.0
900.0	2.0	2.0	2.0	2.5	3.0	3.0	3.5	3.5	3.5	4.0	4.0	4.0	4.5	5.0
1000.0	2.0	2.5	2.5	3.0	3.0	3.5	3.5	4.0	4.0	4.5	4.5	5.0	5.0	6.0

Maximum heat flow = 146 Btu/(h · ft^2) (highest heat flow of any in the table).

TABLE B7.11M Perlite Insulation Thickness Table (Hot)

Recommended thickness table
Surface emittance = 0.4 Average wind velocity = 8 km/h
Hot pipe worst-case ambient temperature of 27°C for a surface temperature of 60.0°C or less

Temperature (°C)	Diameter nominal (DN)													
	(15)	(25)	(40)	(50)	(80)	(100)	(150)	(200)	(250)	(300)	(400)	(450)	(600)	Flat
	Perlite thickness (mm)													
75	25	25	25	25	25	25	25	38	38	38	38	38	38	38
100	25	25	25	25	25	25	25	38	38	38	38	38	38	38
150	25	25	25	25	25	25	25	38	38	38	38	38	38	38
200	25	25	25	25	25	25	25	38	38	38	38	38	38	38
250	25	25	25	25	38	38	38	38	38	38	51	51	51	51
300	25	25	38	38	38	38	51	51	51	51	64	64	64	64
350	38	38	38	38	51	51	51	64	64	64	64	76	76	76
400	38	38	51	51	51	64	64	64	76	76	76	89	89	102
450	51	51	51	64	64	76	76	76	89	89	102	102	102	114
500	51	51	51	64	76	76	89	89	102	102	114	114	114	127
550	64	64	64	76	89	89	102	102	114	114	127	127	127	152

Maximum heat flow = 479 W/m^2 (highest heat flow of any in the table).

TABLE B7.12 Mineral Wool Insulation Thickness Table (Hot)

Recommended thickness table
Surface emittance = 0.4 Average wind velocity = 5.0 mph
Hot pipe worst-case ambient temperature of 90°F for a surface temperature of 140.0°F or less

Temperature (°F)	Nominal pipe size (NPS)													
	0.5	1.0	1.5	2.0	3.0	4.0	6.0	8.0	10.0	12.0	16.0	18.0	24.0	Flat
	Mineral wool thickness (in)													
200.0	1.0	1.0	1.0	1.0	1.0	1.0	1.0	1.5	1.5	1.5	1.5	1.5	1.5	1.5
300.0	1.0	1.0	1.0	1.0	1.0	1.0	1.0	1.5	1.5	1.5	1.5	1.5	1.5	1.5
400.0	1.0	1.0	1.0	1.0	1.0	1.0	1.0	1.5	1.5	1.5	1.5	1.5	1.5	1.5
500.0	1.0	1.0	1.0	1.0	1.5	1.5	1.5	1.5	1.5	1.5	1.5	1.5	2.0	2.0
600.0	1.0	1.5	1.5	1.5	1.5	1.5	2.0	2.0	2.0	2.0	2.0	2.5	2.5	2.5
700.0	1.5	1.5	2.0	2.0	2.0	2.0	2.5	2.5	2.5	2.5	3.0	3.0	3.0	3.5
800.0	1.5	2.0	2.0	2.0	2.5	2.5	3.0	3.0	3.0	3.5	3.5	3.5	4.0	4.5
900.0	2.0	2.5	2.5	2.5	3.0	3.0	3.5	3.5	4.0	4.0	4.5	4.5	4.5	5.5
1000.0	2.5	2.5	3.0	3.0	3.5	4.0	4.0	4.5	4.5	5.0	5.0	5.5	5.5	6.5
1100.0	2.5	3.0	3.5	4.0	4.0	4.5	4.5	5.0	5.0	6.0	6.0	6.5	6.5	8.0
1200.0	3.0	3.5	4.0	4.5	4.5	5.0	5.0	5.5	6.0	7.0	7.0	7.5	7.5	9.5

Maximum heat flow = 119.5 Btu/(h · ft^2) (highest heat flow of any in the table).

TABLE B7.12M Mineral Wool Insulation Thickness Table (Hot)

Recommended thickness table

Surface emittance = 0.4 Average wind velocity = 8 km/h

Hot pipe worst-case ambient temperature of 32°C for a surface temperature of 60.0°C or less

Temperature (°C)	Diameter nominal (DN)													
	(15)	(25)	(40)	(50)	(80)	(100)	(150)	(200)	(250)	(300)	(400)	(450)	(600)	Flat
	Mineral wool thickness (mm)													
75	25	25	25	25	25	25	25	38	38	38	38	38	38	38
100	25	25	25	25	25	25	25	38	38	38	38	38	38	38
150	25	25	25	25	25	25	25	38	38	38	38	38	38	38
200	25	25	25	25	25	25	25	38	38	38	38	38	38	38
250	25	25	25	25	25	25	38	38	38	38	38	38	38	51
300	25	25	38	38	38	38	51	51	51	51	51	51	51	64
350	38	38	38	38	51	51	51	64	64	64	64	64	76	76
400	38	38	51	51	64	64	64	64	76	76	89	89	89	102
450	51	51	51	64	64	76	76	89	89	89	102	102	102	114
500	51	64	64	76	76	89	89	102	102	114	114	114	127	140
550	64	76	76	89	89	102	114	114	127	127	140	140	140	178
600	64	76	89	102	102	114	127	140	140	152	165	165	165	203
650	76	89	102	114	127	127	140	152	165	178	178	191	191	241

Maximum heat flow = 371.3 W/m^2 (highest heat flow of any in the table).

TABLE B7.13 Mineral Wool Insulation Thickness Table (Hot)

Recommended thickness table

Surface emittance = 0.4 Average wind velocity = 5.0 mph

Hot pipe worst-case ambient temperature of 80.0°F for a surface temperature of 140.0°F or less

Temperature (°F)	Nominal pipe size (NPS)													
	0.5	1.0	1.5	2.0	3.0	4.0	6.0	8.0	10.0	12.0	16.0	18.0	24.0	Flat
	Mineral wool thickness (in)													
200.0	1.0	1.0	1.0	1.0	1.0	1.0	1.0	1.5	1.5	1.5	1.5	1.5	1.5	1.5
300.0	1.0	1.0	1.0	1.0	1.0	1.0	1.0	1.5	1.5	1.5	1.5	1.5	1.5	1.5
400.0	1.0	1.0	1.0	1.0	1.0	1.0	1.0	1.5	1.5	1.5	1.5	1.5	1.5	1.5
500.0	1.0	1.0	1.0	1.0	1.0	1.0	1.0	1.5	1.5	1.5	1.5	1.5	2.0	2.0
600.0	1.0	1.0	1.0	1.5	1.5	1.5	1.5	1.5	1.5	1.5	2.0	2.0	2.0	2.0
700.0	1.5	1.5	1.5	1.5	1.5	2.0	2.0	2.0	2.0	2.0	2.5	2.5	2.5	3.0
800.0	1.5	1.5	2.0	2.0	2.0	2.0	2.5	2.5	2.5	3.0	3.0	3.0	3.0	3.5
900.0	2.0	2.0	2.0	2.0	2.5	2.5	3.0	3.0	3.5	3.5	3.5	4.0	4.0	4.5
1000.0	2.0	2.5	2.5	2.5	3.0	3.0	3.5	3.5	4.0	4.0	4.5	4.5	4.5	5.5
1100.0	2.5	2.5	2.5	3.0	3.5	3.5	4.0	4.5	4.5	5.0	5.0	5.5	5.5	6.5
1200.0	2.5	3.0	3.0	3.5	4.0	4.5	5.0	5.0	5.5	5.5	6.0	6.0	6.5	8.0

Maximum heat flow = 142 Btu/(h · ft^2) (highest heat flow of any in the table).

TABLE B7.13M Mineral Wool Insulation Thickness Table (Hot)
Recommended thickness table
Surface emittance = 0.4 Average wind velocity = 8 km/h
Hot pipe worst-case ambient temperature of 27°C for a surface temperature of 60.0°C or less

Temperature (°C)	Diameter nominal (DN)													
	(15)	(25)	(40)	(50)	(80)	(100)	(150)	(200)	(250)	(300)	(400)	(450)	(600)	Flat
	Mineral wool thickness (mm)													
75	25	25	25	25	25	25	25	38	38	38	38	38	38	38
100	25	25	25	25	25	25	25	38	38	38	38	38	38	38
150	25	25	25	25	25	25	25	38	38	38	38	38	38	38
200	25	25	25	25	25	25	25	38	38	38	38	38	38	38
250	25	25	25	25	25	25	25	38	38	38	38	38	38	38
300	25	25	25	25	38	38	38	38	38	38	51	51	51	51
350	25	25	38	38	38	38	51	51	51	51	51	64	64	64
400	38	38	38	38	51	51	51	64	64	64	64	76	76	76
450	38	51	51	51	64	64	64	64	76	76	89	89	89	102
500	51	51	51	64	64	76	76	76	89	89	102	102	102	114
550	51	64	64	76	76	89	89	102	102	102	114	114	127	140
600	64	64	76	76	89	102	102	114	127	127	140	140	140	165
650	64	76	76	89	102	114	127	127	140	140	152	152	165	203

Maximum heat flow = 469 W/m^2 (highest heat flow of any in the table).

of 850°F (454°C). Mineral wool has a peak temperature limit of 1200°F (649°C). Fiberglass is made from glass fibers bonded together with resin binders. Mineral wool is made from rock slag fibers and bonded together with resin or clay binders. These materials are generally applied with metal bands or wire or tape and are covered with a metal or nonmetallic flexible jacket. On indoor applications they are frequently covered with an all-service jacket.

Perlite Insulation. Perlite insulation is generally used in the same types of applications as calcium silicate. It is somewhat lighter in density and lower in compressive strength than calcium silicate; however, it usually is treated with a water inhibitor

TABLE B7.14 Polyurethane and Polyisocyanurate Insulation Thickness Table (Hot)
Recommended thickness table
Surface emittance = 0.4 Average wind velocity = 5.0 mph
Hot pipe worst-case ambient temperature of 90.0°F for a surface temperature of 140.0°F or less

Temperature (°F)	Nominal pipe size (NPS)													
	0.5	1.0	1.5	2.0	3.0	4.0	6.0	8.0	10.0	12.0	16.0	18.0	24.0	Flat
	Polyurethane and polyisocyanurate thickness (in)													
200.0	1.0	1.0	1.0	1.0	1.0	1.0	1.0	1.5	1.5	1.5	1.5	1.5	1.5	1.5
250.0	1.0	1.0	1.0	1.0	1.0	1.0	1.0	1.5	1.5	1.5	1.5	1.5	1.5	1.5
300.0	1.0	1.0	1.0	1.0	1.0	1.0	1.0	1.5	1.5	1.5	1.5	1.5	1.5	1.5

Maximum heat flow = 42.9 Btu/(h · ft^2) (highest heat flow of any in the table).

TABLE B7.14M Polyurethane and Polyisocyanurate Insulation Thickness Table (Hot)

Recommended thickness table
Surface emittance = 0.4 Average wind velocity = 8 km/h
Hot pipe worst-case ambient temperature of 32°C for a surface temperature of 60.0°C or less

Temperature (°C)	Diameter nominal (DN)													
	(15)	(25)	(40)	(50)	(80)	(100)	(150)	(200)	(250)	(300)	(400)	(450)	(600)	Flat
	Polyurethane and polyisocyanurate thickness (mm)													
75	25	25	25	25	25	25	25	38	38	38	38	38	38	38
100	25	25	25	25	25	25	25	38	38	38	38	38	38	38
150	25	25	25	25	25	25	25	38	38	38	38	38	38	38

Maximum heat flow = 136 W/m^2 (highest heat flow of any in the table).

TABLE B7.15 Cellular Glass Insulation Thickness Table (Cold)

Recommended lower pipe temperature limits for given insulation thickness (°F)
Insulation material: Super_k™ FOAMGLAS® insulation
Ambient temperature = 90.0°F Heat flow limit = -10.0 ± 0.1 Btu/(h · ft^2)
Wind velocity = 5.0 mph Emittance = 0.9

NPS	Insulation thickness (in) Super_k™ FOAMGLAS® insulation*																
	1.0	1.5	2.0	2.5	3.0	3.5	4.0	4.5	5.0	5.5	6.0	6.5	7.0	7.5	8.0	8.5	9.0
0.05	23	−32	−95	−139	−245	−396											
0.75	35	−13	−68	−105	−191												
1.00	25	−17	−73	−145	−234	−363											
1.50	33	−2	−26	−79	−141	−221	−331										
2.00	35	0	−44	−95	−157	−237	−364										
2.50	37	20	−17	−59	−110	−173	−265	−381									
3.00	40	9	−26	−67	−117	−187	−268	−378									
4.00	41	13	−19	−57	−107	−162	−230	−346									
5.00	43	17	−12	−51	−92	−141	−217	−296	−403								
6.00	46	21	−10	−43	−81	−138	−194	−263	−353								
8.00		20	−6	−45	−80	−122	−170	−229	−302	−398							
10.00		19	−6	−35	−68	−105	−149	−199	−261	−339	−439						
12.00		20	−4	−32	−63	−98	−139	−186	−242	−311	−399						
14.00		26	2	−23	−53	−86	−124	−167	−218	−280	−357						
16.00		27	3	−21	−50	−82	−118	−159	−207	−264	−335	−424					
18.00		27	4	−20	−48	−79	−113	−153	−198	−252	−318	−400					
20.00		28	5	−19	−46	−76	−109	−147	−191	−242	−304	−381					
24.00		28	6	−17	−43	−72	−104	−140	−180	−228	−284	−353	−437				
28.00		29	7	−15	−41	−69	−100	−134	−173	−217	−270	−333	−411				
30.00		29	8	−15	−40	−68	−98	−132	−170	−213	−264	−325	−400				
36.00		29	8	−13	−38	−65	−94	−126	−163	−204	−251	−307	−375				
42.00		30	9	−12	−37	−63	−91	−122	−157	−197	−242	−295	−358	−434			
48.00		30	9	−12	−35	−61	−89	−120	−153	−191	−235	−285	−345	−417			
60.00		30	10	−11	−34	−59	−86	−115	−148	−184	−225	−272	−327	−393			
72.00		31	10	−10	−33	−57	−84	−113	−144	−179	−218	−263	−316	−378			
96.00		31	11	−9	−32	−56	−81	−109	−139	−173	−210	−253	−301	−358	−425		
120.00		31	11	−9	−31	−54	−80	−107	−137	−169	−205	−246	−293	−347	−410		
168.00		31	12	−8	−30	−53	−78	−105	−133	−165	−200	−239	−283	−334	−393		
Flat		32	13	−7	−28	−50	−73	−99	−125	−154	−186	−221	−260	−303	−353	−410	

* Super_k™ FOAMGLAS® insulation is a registered trademark of Pittsburgh Corning Corporation.

TABLE B7.15M Cellular Glass Insulation Thickness Table (Cold)

Recommended lower pipe temperature limits for given insulation thickness (°C)
Insulation material: Super_k™ FOAMGLAS® insulation
Ambient temperature = 32°C Heat flow limit = −31.5 W/m^2
Wind velocity = 8 km/h Emittance = 0.9

	Insulation thickness (in) Super_k™ FOAMGLAS® insulation*																
NPS	1.0	1.5	2.0	2.5	3.0	3.5	4.0	4.5	5.0	5.5	6.0	6.5	7.0	7.5	8.0	8.5	9.0
0.05	−4	−35	−70	−95	−154	−238											
0.75	1	−25	−55	−76	−124												
1.00	−3	−27	−58	−98	−148	−219											
1.50	0	−19	−32	−62	−96	−140	−202										
2.00	1	−18	−42	−70	−105	−149	−220										
2.50	2	−6	−27	−50	−79	−114	−165	−229									
3.00	4	−12	−32	−55	−83	−121	−166	−227									
4.00	5	−10	−28	−49	−77	−108	−145	−210									
5.00	6	−7	−24	−46	−69	−96	−138	−182	−241								
6.00	7	−5	−23	−42	−63	−94	−125	−164	−214								
8.00		−6	−21	−42	−62	−85	−112	−145	−186	−239							
10.00		−7	−21	−37	−55	−76	−100	−128	−163	−206	−262						
12.00		−6	−20	−35	−53	−72	−95	−121	−152	−190	−239						
14.00		−2	−16	−30	−47	−65	−86	−110	−139	−173	−216						
16.00		−2	−15	−29	−45	−63	−83	−106	−132	−164	−204	−253					
18.00		−2	−15	−28	−44	−61	−80	−102	−128	−158	−194	−240					
20.00		−2	−14	−27	−43	−60	−78	−99	−124	−152	−187	−229					
24.00		−1	−13	−26	−41	−57	−75	−95	−118	−144	−175	−214	−260				
28.00		−1	−13	−25	−40	−56	−73	−92	−114	−138	−168	−203	−246				
30.00		−1	−13	−24	−40	−55	−72	−91	−112	−136	−164	−198	−240				
36.00		0	−12	−24	−39	−54	−70	−88	−108	−131	−157	−188	−226				
42.00		0	−12	−23	−38	−52	−68	−86	−105	−127	−152	−181	−217	−259			
48.00		0	−12	−23	−37	−51	−67	−84	−103	−124	−148	−176	−209	−249			
60.00		0	−11	−23	−36	−50	−65	−82	−100	−120	−143	−169	−199	−236			
72.00		0	−11	−22	−36	−49	−64	−80	−98	−117	−139	−164	−193	−227			
96.00		0	−11	−22	−35	−48	−63	−78	−95	−114	−134	−158	−185	−217	−254		
120.00		0	−11	−22	−35	−48	−62	−77	−93	−112	−132	−154	−180	−210	−245		
168.00		0	−11	−22	−34	−47	−61	−76	−92	−109	−129	−150	−175	−203	−236		
Flat		0	−10	−21	−33	−45	−58	−72	−87	−103	−121	−140	−162	−186	−214	−246	

* Super_k™ FOAMGLAS® insulation is a registered trademark of Pittsburgh Corning Corporation.

which tends to keep it drier than calcium silicate. Perlite insulation is also made in molds to fit the range of pipe-covering shapes required by industry. It is usually applied with metal bands and covered with a metal jacket.

Phenolic Foam Insulation. Phenolic foam is a very low thermal conductivity organic foam insulation used primarily for plastic piping in freeze protection applications. Phenolic foam insulation is made in a catalyst reaction bun and is cut in a fabrication process to the sizes needed for the applications. It is generally applied with tape or wire and covered with all-service jacket or metal jacket depending on the ambient conditions and the geography.

Polystyrene Insulation. Polystyrene is a very inexpensive, efficient thermal insulation used almost exclusively in residential and food processing applications. It comes in expanded boards and extruded buns. The extruded buns are sometimes used to fabricate pipe covering for chilled water lines or water and sewer lines. In residential applications it is used in the wall panels. In food processing it is used in the walls

TABLE B7.16 Polyurethane or Polyisocyanurate Insulation Thickness Table (Cold)
Recommended lower pipe temperature limits for given insulation thickness (°F)
Insulation material: urethane
Ambient temperature = 90.0°F Heat flow limit = −10.0 ± 0.1 Btu/(h·ft²)
Wind velocity = 5.0 mph Emittance = 0.9

	Insulation thickness (in)																
NPS	1.0	1.5	2.0	2.5	3.0	3.5	4.0	4.5	5.0	5.5	6.0	6.5	7.0	7.5	8.0	8.5	9.0
0.05	−18	−94	−171	−359													
0.75	0	−69	−138	−289	−425												
1.00	−15	−74	−144	−230	−345												
1.50	−2	−55	−152	−226	−328	−443											
2.00	0	−52	−109	−170	−245	−349											
2.50	3	−74	−128	−189	−265	−384											
3.00	8	−38	−85	−137	−197	−283	−386										
4.00	9	−32	−76	−124	−185	−251	−339										
5.00	13	−25	−67	−118	−167	−225	−322	−416									
6.00	17	−20	−65	−108	−154	−222	−291	−381									
8.00		−21	−59	−109	−153	−202	−261	−338	−421								
10.00		−23	−60	−98	−138	−183	−234	−299	−379	−448							
12.00		−21	−57	−93	−132	−174	−222	−281	−354	−428							
14.00		−12	−46	−82	−119	−159	−204	−257	−323	−399							
16.00		−11	−45	−79	−116	−154	−197	−247	−308	−382	−445						
18.00		−10	−44	−78	−113	−150	−192	−239	−297	−367	−433						
20.00		−10	−42	−76	−111	−147	−187	−233	−288	−355	−422						
24.00		−9	−41	−73	−107	−142	−180	−223	−274	−336	−404						
28.00		−8	−40	−72	−104	−139	−176	−217	−264	−323	−389	−444					
30.00		−8	−39	−71	−103	−137	−174	−214	−260	−317	−382	−439					
36.00		−7	−38	−69	−101	−134	−169	−207	−251	−304	−366	−425					
42.00		−7	−37	−68	−99	−131	−166	−203	−245	−295	−354	−414					
48.00		−6	−36	−67	−98	−129	−163	−199	−240	−288	−345	−405					
60.00		−6	−36	−65	−96	−127	−159	−194	−233	−279	−332	391	−440				
72.00		−5	−35	−65	−94	−125	−157	−191	−229	−272	324	−381	−432				
96.00		−5	−34	−63	−93	−123	−154	−187	−223	−264	−313	−368	−420				
120.00		−5	−34	−63	−92	−121	−152	−184	−220	−260	−306	−360	−412				
168.00		−4	−33	−62	−91	−120	−150	−181	−216	−254	−299	−350	−402	−444			
Flat		−4	−32	−60	−88	−116	−144	−174	−206	−241	−281	−327	−377	−421			

and on the roofs. It has a low permeability rating and is easy to work with. It is applied with bands, tape, wire, or glue depending on the application.

Polyurethane and Polyisocyanurate Foam Insulations. Polyurethane and polyisocyanurate foams are two chemically different insulation materials; however, their cell structure and physical properties are so similar that they are usually lumped into a common category. This is probably not fair to polyisocyanurate foam insulation because it generally tends to be of higher quality. Both insulations have very good thermal properties. They are used from about −200°F (−129°C) up to 300°F (149°C) both indoors and outdoors. On cold applications they require multiple layers due to the contraction characteristics. These insulations are manufactured in batch bun processing and then sold to fabricators who cut them into various shapes and sizes depending on the applications. These insulation materials are usually applied with tape or wire and covered with either a fabric-reinforced mastic or a metal jacket.

TABLE B7.16M Polyurethane or Polyisocyanurate Insulation Thickness Table (Cold)

Recommended lower pipe temperature limits for given insulation thickness (°C)
Insulation material: urethane insulation
Ambient temperature = 32°C Heat flow limit = 2.93 W/m^2
Wind velocity = 8 km/h Emittance = 0.9

	Insulation thickness (in)																
NPS	1.0	1.5	2.0	2.5	3.0	3.5	4.0	4.5	5.0	5.5	6.0	6.5	7.0	7.5	8.0	8.5	9.0
0.05	−28	−70	−113	−217													
0.75	−17	−56	−94	−178	−254												
1.00	−26	−59	−98	−145	−209												
1.50	−19	−48	−102	−143	−200	−264											
2.00	−17	−46	−78	−112	−154	−211											
2.50	−15	−59	−88	−122	−165	−231											
3.00	−12	−39	−65	−94	−127	−175	−232										
4.00	−12	−35	−60	−87	−120	−157	−206										
5.00	−10	−32	−55	−83	−110	−143	−196	−248									
6.00	−8	−29	−54	−77	−103	−141	−179	−229									
8.00		−29	−50	−78	−102	−130	−163	−205	−251								
10.00		−30	−51	−72	−94	−119	−148	−184	−228	−266							
12.00		−29	−49	−69	−91	−114	−141	−173	−214	−255							
14.00		−24	−43	−63	−84	−106	−131	−160	−197	−239							
16.00		−24	−42	−62	−82	−103	−127	−155	−189	−230	−265						
18.00		−23	−42	−61	−80	−101	−124	−150	−182	−222	−258						
20.00		−23	−41	−60	−79	−99	−122	−147	−177	−215	−252						
24.00		−22	−40	−58	−77	−97	−118	−142	−170	−204	−242						
28.00		−22	−40	−57	−76	−95	−115	−138	−164	−197	−233	−264					
30.00		−22	−39	−57	−75	−94	−114	−136	−162	−194	−230	−261					
36.00		−21	−39	−56	−74	−92	−111	−133	−157	−186	−221	−254					
42.00		−21	−38	−55	−73	−90	−110	−130	−154	−181	−214	−247					
48.00		−21	−38	−55	−72	−89	−108	−128	−151	−178	−209	−242					
60.00		−21	−37	−54	−71	−88	−106	−126	−147	−172	−202	−235	−262				
72.00		−21	−37	−53	−70	−87	−105	−124	−145	−169	−197	−229	−257				
120.00		−20	−36	−52	−68	−85	−102	−120	−140	−162	−188	−218	−246				
168.00		−20	−36	−52	−68	−84	−101	−118	−137	−159	−184	−212	−241	−264			
Flat		−20	−35	−51	−66	−82	−98	−114	−132	−152	−174	−199	−227	−252			

TABLE B7.17 Calcium Silicate Insulation *k* Value Table
Thermal conductivity as a function of temperature for calcium silicate (calsil)

English units		Non-SI metric units		SI units	
At uniform temperature (°F)	Thermal conductivity [Btu · in/(h · ft^2 · °F)]	At uniform temperature (°C)	Thermal conductivity [kcal/(h · m^2 · °C)]	At uniform temperature (K)	Thermal conductivity [W/(m · K)]
0.0	0.373	−17.8	0.0462	255.4	0.0537
50.0	0.388	10.0	0.0481	283.1	0.0559
100.0	0.403	37.8	0.0499	310.9	0.0580
150.0	0.418	65.6	0.0518	338.7	0.0602
200.0	0.433	93.3	0.0537	366.5	0.0624
250.0	0.449	121.1	0.0557	394.3	0.0647
300.0	0.466	148.9	0.0577	422.0	0.0671
350.0	0.483	176.7	0.0599	449.8	0.0696
400.0	0.501	204.4	0.0622	477.6	0.0722
450.0	0.521	232.2	0.0646	505.4	0.0750
500.0	0.541	260.0	0.0671	533.2	0.0780
550.0	0.563	287.8	0.0698	560.9	0.0812
600.0	0.587	315.6	0.0728	588.7	0.0846
650.0	0.612	343.3	0.0759	616.5	0.0882
700.0	0.639	371.1	0.0793	644.3	0.0921
750.0	0.668	398.9	0.0829	672.0	0.0963
800.0	0.700	426.7	0.0868	699.8	0.1008
850.0	0.733	454.4	0.0909	727.6	0.1057
900.0	0.769	482.2	0.0954	755.4	0.1109
950.0	0.808	510.0	0.1002	783.2	0.1165
1000.0	0.849	537.8	0.1053	810.9	0.1224

The values of the thermal conductivity of the insulation shown above were determined by evaluating a polynomial at the insulation temperature. This polynomial, giving the thermal conductivity in Btu · in/(h · ft^2 · °F) as a function of temperature in °F, is $K(T) = 0.3728 + 2.98\text{E-}4(T) - 2.3\text{E-}8(T^2) + 2.02\text{E-}10(T^3)$.

This curve is based on an insulation density of 16.0 lb/ft^3 and may be subject to decreasing reliability outside the temperature range from 250.0 to 1000.0°F.

TABLE B7.18 Super_k™ FOAMGLAS® Insulation *K* Value Table
Thermal conductivity as a function of temperature for Super_k™ FOAMGLAS® insulation*

English units		Non-SI metric units		SI units	
At uniform temperature (°F)	Thermal conductivity [Btu · in/(h · ft^2 · °F)]	At uniform temperature (°C)	Thermal conductivity [kcal/(h · m^2 · °C)]	At uniform temperature (K)	Thermal conductivity [W/(m · K)]
−300.0	0.109	−184.4	0.0135	88.7	0.0156
−250.0	0.126	−156.7	0.0156	116.5	0.0181
−200.0	0.146	−128.9	0.0181	144.3	0.0210
−150.0	0.168	−101.1	0.0208	172.0	0.0242
−100.0	0.193	−73.3	0.0239	199.8	0.0278
−50.0	0.219	−45.6	0.0272	227.6	0.0316
0.0	0.247	−17.8	0.0307	255.4	0.0356
50.0	0.277	10.0	0.0344	283.1	0.0399
100.0	0.309	37.8	0.0383	310.9	0.0455
150.0	0.342	65.6	0.0425	338.7	0.0494
200.0	0.378	93.3	0.0469	366.5	0.0545
250.0	0.416	121.1	0.0516	394.3	0.0600
300.0	0.457	148.9	0.0566	422.0	0.0658
350.0	0.500	176.7	0.0621	449.8	0.0721
400.0	0.548	204.4	0.0679	477.6	0.0789
450.0	0.599	232.2	0.0742	505.4	0.0863
500.0	0.654	260.0	0.0811	533.2	0.0943
550.0	0.715	287.8	0.0887	560.9	0.1031
600.0	0.782	315.6	0.0969	588.7	0.1127
650.0	0.855	343.3	0.1060	616.5	0.1232
700.0	0.935	371.1	0.1159	644.3	0.1347
750.0	1.023	398.9	0.1268	672.0	0.1474
800.0	1.119	426.7	0.1388	699.8	0.1613
850.0	1.225	454.4	0.1520	727.6	0.1766
900.0	1.342	482.2	0.1664	755.4	0.1934

* Super_k™ FOAMGLAS® insulation is a registered trademark of Pittsburgh Corning Corporation.

The values of the thermal conductivity of the insulation shown above were determined by evaluating a polynomial at the insulation temperature. This polynomial, giving the thermal conductivity in Btu · in/(h · ft^2 · °F) as a function of temperature in °F, is $K(T) = 0.2472 + 5.811\text{E-}4(T) + 3.4561\text{E-}7(T^2) + 3.2\text{E-}13(T^3) + 5.3092\text{E-}13(T^4) - 9.64\text{E-}17(T^5)$.

This curve is based on an insulation density of 7.5 lb/ft^3 and may be subject to decreasing reliability outside the temperature range from −250.0 to 800.0°F.

TABLE B7.19 Fiberglas Insulation *K* Value Table
Thermal conductivity as a function of temperature for fiberglass

English units		Non-SI metric units		SI units	
At uniform temperature (°F)	Thermal conductivity [Btu · in/(h · ft² · °F)]	At uniform temperature (°C)	Thermal conductivity [kcal/(h · m² · °C)]	At uniform temperature (K)	Thermal conductivity [W/(m · K)]
0.0	0.195	−17.8	0.0241	255.4	0.0280
50.0	0.216	10.0	0.0268	283.1	0.0311
100.0	0.237	37.8	0.0294	310.9	0.0342
150.0	0.258	65.6	0.0320	338.7	0.0372
200.0	0.280	93.3	0.0347	366.5	0.0403
250.0	0.301	121.1	0.0373	394.3	0.0433
300.0	0.322	148.9	0.0399	422.0	0.0464
350.0	0.343	176.7	0.0426	449.8	0.0495
400.0	0.364	204.4	0.0452	477.6	0.0525
450.0	0.386	232.2	0.0478	505.4	0.0556
500.0	0.407	260.0	0.0505	533.2	0.0587
550.0	0.428	287.8	0.0531	560.9	0.0617
600.0	0.449	315.6	0.0557	588.7	0.0648
650.0	0.471	343.3	0.0584	616.5	0.0678
700.0	0.492	371.1	0.0610	644.3	0.0709
750.0	0.513	398.9	0.0636	672.0	0.0740
800.0	0.534	426.7	0.0663	699.8	0.0770
850.0	0.556	454.4	0.0689	727.6	0.0801

The values of the thermal conductivity of the insulation shown above were determined by evaluating a polynomial at the insulation temperature. This polynomial, giving the thermal conductivity in Btu · in/(h · ft² · °F) as a function of temperature in °F, is $K(T) = 0.195 + 4.25\text{E-}4(T) + 0.0000(T^2)$.

This curve is based on an insulation density of 5.63 lb/ft³ and may be subject to decreasing reliability outside the temperature range from 42.0 to 800.0°F.

TABLE B7.20 Mineral Wool Insulation *K* Value Table
Thermal conductivity as a function of temperature for mineral wool

English units		Non-SI metric units		SI units	
At uniform temperature (°F)	Thermal conductivity [Btu · in/(h · ft^2 · °F)]	At uniform temperature (°C)	Thermal conductivity [kcal/(h · m^2 · °C)]	At uniform temperature (K)	Thermal conductivity [W/(m · K)]
0.0	0.228	−17.8	0.0283	255.4	0.0329
50.0	0.248	10.0	0.0307	283.1	0.0357
100.0	0.271	37.8	0.0336	310.9	0.0391
150.0	0.297	65.6	0.0368	338.7	0.0428
200.0	0.326	93.3	0.0405	366.5	0.0470
250.0	0.358	121.1	0.0444	394.3	0.0516
300.0	0.393	148.9	0.0488	422.0	0.0567
350.0	0.432	176.7	0.0535	449.8	0.0622
400.0	0.473	204.4	0.0586	477.6	0.0681
450.0	0.517	232.2	0.0641	505.4	0.0745
500.0	0.564	260.0	0.0699	533.2	0.0813
550.0	0.614	287.8	0.0761	560.9	0.0885
600.0	0.667	315.6	0.0827	588.7	0.0961
650.0	0.723	343.3	0.0897	616.5	0.1042
700.0	0.782	371.1	0.0970	644.3	0.1127
750.0	0.844	398.9	0.1047	672.0	0.1217
800.0	0.909	426.7	0.1128	699.8	0.1311
850.0	0.978	454.4	0.1212	727.6	0.1409
900.0	1.049	482.2	0.1300	755.4	0.1511
950.0	1.123	510.0	0.1392	783.2	0.1618
1000.0	1.200	537.8	0.1488	810.9	0.1729
1050.0	1.280	565.6	0.1587	838.7	0.1845
1100.0	1.363	593.3	0.1690	866.5	0.1965
1150.0	1.499	621.1	0.1797	894.3	0.2089
1200.0	1.538	648.9	0.1908	922.2	0.2217

The values of the thermal conductivity of the insulation shown above were determined by evaluating a polynomial at the insulation temperature. This polynomial, giving the thermal conductivity in Btu · in/(h · ft^2 · °F) as a function of temperature in °F, is $K(T) = 0.228 + 3.72\text{E-}4(T) + 6.0\text{E-}7(T^2)$.

This curve is based on an insulation density of 11.7 lb/ft^3 and may be subject to decreasing reliability outside the temperature range from 42.0 to 1100.0°F.

TABLE B7.21 Perlite Insulation *K* Value Table
Thermal conductivity as a function of temperature for perlite

English units		Non-SI metric units		SI units	
At uniform temperature (°F)	Thermal conductivity [Btu · in/(h · ft^2 · °F)]	At uniform temperature (°C)	Thermal conductivity [kcal/(h · m^2 · °C)]	At uniform temperature (K)	Thermal conductivity [W/(m · K)]
0.0	0.403	−17.8	0.0500	255.4	0.0581
50.0	0.434	10.0	0.0538	283.1	0.0626
100.0	0.464	37.8	0.0575	310.9	0.0668
150.0	0.492	65.6	0.0610	338.7	0.0709
200.0	0.519	93.3	0.0644	366.5	0.0748
250.0	0.546	121.1	0.0677	394.3	0.0787
300.0	0.572	148.9	0.0709	422.0	0.0824
350.0	0.598	176.7	0.0741	449.8	0.0862
400.0	0.624	204.4	0.0774	477.6	0.0899
450.0	0.650	232.2	0.0806	505.4	0.0937
500.0	0.677	260.0	0.0840	533.2	0.0976
550.0	0.705	287.8	0.8740	560.9	0.1016
600.0	0.734	315.6	0.0910	588.7	0.1058
650.0	0.764	343.3	0.0948	616.5	0.1101
700.0	0.796	371.1	0.0987	644.3	0.1148
750.0	0.830	398.9	0.1029	672.0	0.1196
800.0	0.866	426.7	0.1074	699.8	0.1248
850.0	0.905	454.4	0.1122	727.6	0.1304
900.0	0.946	482.2	0.1173	755.4	0.1363
950.0	0.990	510.0	0.1228	783.2	0.1427
1000.0	1.038	537.8	0.1287	810.9	0.1496

The values of the thermal conductivity of the insulation shown above were determined by evaluating a polynomial at the insulation temperature. This polynomial, giving the thermal conductivity in Btu · in/(h · ft^2 · °F) as a function of temperature in °F, is $K(T) = 0.4030 + 6.38\text{E-}4(T) - 3.56\text{E-}7(T^2) + 3.53\text{E-}10(T^3)$.

This curve is based on an insulation density of 12.0 lb/ft^3 and may be subject to decreasing reliability outside the temperature range from 250.0 to 1000.0°F.

TABLE B7.22 Polyurethane or Polyisocyanurate Foam Insulation *K* Value Table
Thermal conductivity as a function of temperature for urethane

English units		Non-SI metric units		SI units	
At uniform temperature (°F)	Thermal conductivity [Btu · in/(h · ft^2 · °F)]	At uniform temperature (°C)	Thermal conductivity [kcal/(h · m^2 · °C)]	At uniform temperature (K)	Thermal conductivity [W/(m · K)]
−100.0	0.179	−73.3	0.0222	199.8	0.0258
−50.0	0.179	−45.6	0.0223	227.6	0.0259
0.0	0.174	−17.8	0.0215	255.4	0.0250
50.0	0.166	10.0	0.0206	283.1	0.0239
100.0	0.165	37.8	0.0204	310.9	0.0238
150.0	0.180	65.6	0.0223	338.7	0.0260
200.0	0.225	93.3	0.0279	366.5	0.0324
250.0	0.316	121.1	0.0391	394.3	0.0455
300.0	0.470	148.9	0.0583	422.0	0.0677
350.0	0.710	176.7	0.0880	449.8	0.1023

The values of the thermal conductivity of the insulation shown above were determined by evaluating a polynomial at the insulation temperature. This polynomial, giving the thermal conductivity in Btu · in/(h · ft^2 · °F) as a function of temperature in °F, is $K(T) = 0.1735 - 1.549\text{E-}4(T) - 3.389\text{E-}7(T^2) + 8.377\text{E-}9(T^3) + 1.819\text{E-}11(T^4)$.

This curve is based on an insulation density of 2.0 lb/ft^3 and may be subject to decreasing reliability outside the temperature range from −50.0 to 250.0°F.

ACCESSORY MATERIALS

The accessory materials referenced in the above paragraphs and throughout the chapter are a necessary part of the insulation system. There are many manufacturers and suppliers of these materials, and the quality can vary dramatically from one to another. The following are a few of the more common accessory materials used in industrial and commercial insulation system specifications. See also Table B7.23.

Acrylic Latex Mastic

Acrylic latex mastic is a heavy-bodied weather barrier coating used primarily to cover rigid insulations such as cellular glass and polyurethane. It is generally applied in two coats with a reinforcing mesh fabric for impact and tear resistance. This material does not provide vapor protection.

Aluminum Banding

Aluminum bands are used as securement for many types of insulation materials. The most common sizes specified are 0.5 in × 0.020 in (13 mm × 0.5 mm) aluminum bands with matching seals for piping vessels, or equipment with ODs of 48 in (1219 mm) or less. For larger ODs, use 0.75 in × 0.020 in) (19 mm × 0.5 mm) aluminum bands. These bands are secured in place with metal band clips or seals of common dimensions. Aluminum bands should not be used in applications where the insulation is being installed for fire protection applications.

TABLE B7.23 ASTM Specification Reference

Material	ASTM Specification
Calcium silicate	C533-95
Cellular glass	C552-91
Elastomeric foam	C534-94
Fiberglass and mineral wool	C553-92, C547-95, C612-93
Expanded perlite	C610-95
Phenolic foam	C1126-96
Polystyrene foam	C578-95
Polyurethane modified polyisocyanurate foam	C591-94
Aluminum jacketing and banding	C921-96
Stainless steel jacketing and banding	C921-96
FRP	C921-96
ASJ	C921-96
Asphalt cutback mastic	C647-95
Acrylic latex mastic	C647-95
Hypalon mastic	C647-95
6 × 6 mesh fabric	NA
10 × 10 glass scrim	D1668-86

Aluminum Jacketing

Aluminum jacketing comes in many different sizes and finishes. In piping applications, either smooth or slightly embossed jacketing of 0.016 in (0.4-mm) thickness is most common. When specifying aluminum jacketing for use with permeable and hygroscopic insulation materials, it is important to specify the jacketing with a factory-applied moisture barrier liner.

ASJ

ASJ jacketing stands for all-service jacket. This material is a Kraft paper/foil/scrim laminate material used exclusively on indoor commercial applications. ASJ jacketing is usually factory-applied and serves the primary function of providing protection to the outer insulation surface. These are classified as vapor retarders.

Asphalt Cutback Mastic

Asphalt cutback mastics are heavy-bodied asphalts that are cut with mineral spirits so they can be applied by spraying or with a trowel. When applied, the mineral spirits dissipate, and leave behind a hard asphaltic vapor barrier finish. It is generally applied in multiple coats used in conjunction with reinforcing fabric. Metal jackets are used to cover this finish on aboveground, outdoor applications for ultraviolet protection to the mastic.

FRP Jacketing

FRP stands for *fiber resin plastic* or *fiber-reinforced plastic.* Either definition is acceptable. The material is a hard plastic membrane reinforced with glass fibers. FRP jacketing can be used in many of the same applications where aluminum is used. FRP jacketing is often the material of choice in chemical resistance areas. The jacketing comes in sheet or rolled form, and the laps are sealed with a resin sealant recommended by the manufacturer.

Hypalon Mastics

Hypalon is a trade name for a highly flexible and durable vapor barrier mastic material. There are numerous products on the market that use this material in their compositions to form what are referred to as *elastomeric membranes.* These elastomeric membranes are referred to as *hypalons.* Hypalons are usually reinforced with a 10 × 10 or a 10 × 20 fiberglass fabric to provide stability and tear resistance. Hypalon mastics should not be used in conjunction with cellular glass.

Stainless Steel Banding

Stainless steel bands are used to support or secure insulation materials to piping, tanks, or vessels. Typical sizes specified are 0.5 in × 0.015 in (13 mm × 0.38 mm) stainless steel bands with matching clips or seals for caustic service or where the insulation is being used for fire protection applications.

Stainless Steel Jacketing

Stainless steel jacketing is used to cover insulation materials of all types for various applications. Due to the cost, stainless steel is generally used where it is required for its chemical or fire resistance. Stainless steel usually has a smooth finish and is 0.010 in (0.25 mm) thick. On some large diameter applications 0.015 in (0.38 mm) thick may be specified.

Stainless Steel Tie Wire

Wire may be used to secure fittings or insulation sections. Check with the insulation manufacturer for recommendations on its usage. Soft annealed wire is best suited for field conditions, so as not to work-harden in the field. Wire is typically utilized in 18 and 16 gage thicknesses.

Fiberglass-Reinforced Tape

Tape is typically 1-in (25 mm) wide, high-tensile-strength, fiber-reinforced, strapping tape. Tape is appropriate for providing temporary insulation securement for piping with insulation ODs 18 in (457 mm) or smaller as long as it is covered with metal jacket afterward. Tape is not acceptable as a primary means of securement if the insulation system is being designed to provide fire protection.

Mesh Fabric

A 6 × 6 mesh refers to the number of strands of primary fiber in 1 in^2 of fabric (2.4 meshes/cm^2). A 6 × 6 mesh will have six primary strands going in one direction and six primary strands perpendicular. In a polyester mesh fabric, the primary strands are woven together by a method designed to create a fabric that does not fray or pucker. This fabric is typically specified to accompany applications of heavy-bodied mastics such as acrylic latex and asphalt cutback.

Glass Scrim

Glass scrims come in many different configurations. The most common scrims used in industrial and commercial piping applications are the 10 × 10 (3.9 meshes/cm^2) or the 10 × 20. As with the mesh fabric, the numerical designation refers to the number of primary strands in 1 in^2 of fabric. Glass scrims are best suited to light-bodied mastics, paints, and elastomeric membranes.

REFERENCES

1. National Insulation Contractors Association, Insulation Craft Training Program, *''Theory of Heat Transfer and Moisture Effects on Insulation.''*
2. American Society for Testing and Materials, *Annual Book of Standards,* Vol. 4.06, *Thermal Insulation; Environmental Accoustics.*
3. Charles M. Pelanne, *''Heat Flow Principles,''* Johns Manville Refractory Products Research and Development Division, August 1976.
4. Charles W. Sisler, *''Thermal Insulation Design Concepts,''* Monsanto, Inc.
5. NFPA 30, *The Flammable and Combustible Liquids Code,* 1990 ed. National Fire Protection Association, Quincy, MA,
6. API Recommended Practice 521-82, *Guide for Pressure Relieving and Depressurizing Systems.*
7. Ludwig Adams, *''Thermal Conductivity of Wet Insulations,'' ASHRAE Journal,* October 1974.
8. *ASHRAE Fundamentals Handbook,* Table 2, ''Thermodynamic Properties of Water in Saturation,'' American Society of Heating, Refrigerating, and Air Conditioning Engineers, 1997.
9. William C. Turner and John F. Malloy, *Thermal Insulation Handbook,* Robert E. Krieger/McGraw-Hill, New York, 1981.
10. *Therminol Heat Transfer Fluid,* Data Sheet Monsanto MIC-4-081, Industrial Chemicals Co., pp. 1–24.
11. P.C. Bowes, ''Fires in Oil Soaked Lagging,'' Building Research Establishment Current Paper, CP 35/74, February 1974, pp. 1–11.
12. Fire Hazards in Oxygen Enriched Atmosphere, NFPA 53M, National Fire Protection Association, Quincy, MA, 1990.
13. ''Precautions for the Proper Usage of Polyurethanes, Polyisocyanurates and Related Materials,'' *Technical Bulletin,* The Upjohn Chemical Division, Vol. 107, May 1980, p. 44.

BIBLIOGRAPHY

"Accident Prevention in High Temperature Heat Transfer Fluid Systems," A.R. Albrecht and W.F. Seifert, Reference paper presented at Loss Prevention Symposium, 76th Annual Meeting, American Institute of Chemical Engineers, Atlanta, GA, February, 15–18, 1970 (Dow Chemical Company, revised and updated May 1987), pp. 11–33.

American Society for Testing and Materials, *Annual Book of Standards,* vol. 4.06, *Thermal Insulation; Environmental Acoustics.*

ASHRAE Fundamentals Handbook, American Society of Heating and Refrigerating Engineering, 1989.

"Criteria for Installing Insulation Systems in Petrochemical Plants," W.C. Turner, *Chemical Engineering Progress,* vol. 70, no. 8, August 1974, pp. 3–7.

Fire Hazards in Oxygen Enriched Atmosphere, National Fire Protection Association, Quincy, MA, ANSI/NFPA 53M, December 7, 1985 pp. 10, 17.

"Fires in Oil Soaked Lagging," P.C. Bowes, Building Research Establishment Current Paper, CP 35/74, February 1974, pp. 1–11.

"Heat Flow Principles," Charles M. Pelanne, Johns Manville Refractory Products Research and Development Division, August 1976.

"Heating with Mobiltherm Heat-Transfer Oils" Mobil Oil Corporation, *Mobil Technical Bulletin,* TBL6887101, September 3, 1988, pp. 1–15.

"Method for Fire Hazard Assessment of Fluid-Soaked Thermal Insulation," Robert R. Buch and Daniel H. Filsinger, *Plant/Operations Progress*, vol. 4, July 1985, pp. 176–180.

National Insulation Contractors Association, Insulation Craft Training Program, "Theory of Heat Transfer and Moisture Effects on Insulation."

"Precautions for the Proper Usage of Polyurethanes, Polyisocyanurates and Related Materials," *Technical Bulletin,* Upjohn Chemical Division, vol. 107, May 1980, p. 44.

"Thermal Conductivity of Wet Insulations," *Ludwig Ada Journal*, October 1974.

"Thermal Insulation Design Concepts," Charles W. Sisl Inc.

Thermal Insulation Handbook, William C. Turner and John F. Malloy, Robert E. Krieger Publishing Company, 1981, McGraw-Hill Book Company.

Therminol Heat Transfer Fluid, Data Sheet MIC-4-081, Monsanto Industrial Chemicals Company, pp. 1–24.

CHAPTER B8
FLOW OF FLUIDS

Tadeusz J. Swierzawski
Consultant, Energy Systems
Burlington, Massachusetts

INTRODUCTION

The primary objective of this chapter is to show the user the most important logical milestones and the general background of equations and formulas recommended for specific practical applications of fluid flow in pipes, nozzles, and orifices. For details, Refs. 1 through 4 or other equivalent textbooks should be consulted.

Nomenclature

A nomenclature section is provided to minimize repeating of variable definitions. Unless otherwise stated, all symbols used in this chapter are defined as described in the following lists. Units presented here are mostly those of practical range of applications. The SI units of each physical quantity under consideration appear in parentheses; however, in all equations presented in this chapter only the base U.S. customary units (English units) must be used. For details see "Survey of Dimensions and Units."

Variables

a	Acceleration, ft/s^2 (m/s^2) (m = meter, s = second)
A	Cross-sectional area of pipe, flow duct, or orifice, ft^2 (cm^2)
A_f	Flow area occupied by liquid phase, ft^2 (cm^2)
A_g	Flow area occupied by gaseous phase, ft^2 (cm^2)
c	Velocity of sound, ft/s (m/s)
C	Flow coefficient defined by Eq. (B8.45), dimensionless
C_A	Allen flow constant defined by Eq. (B8.88)
C_c	Coefficient of contraction, dimensionless
C_d	Discharge coefficient, dimensionless

c_p	Specific heat at constant pressure, Btu/($\text{lb}_\text{m}\cdot{}^\circ\text{F}$) (kJ/(kg · K)) (kJ = kilojoule, kg = kilogram, K = kelvin)
c_v	Specific heat at constant volume, Btu/($\text{lb}_\text{m}\cdot{}^\circ\text{F}$) (kJ/(kg · K))
C_v	Velocity coefficient, dimensionless
d	Nozzle or orifice diameter, in (mm) (mm = millimeter)
d_g	Flow height for gaseous phase, in (mm)
D	Pipe inside diameter, ft, in (mm)
E	Energy, Btu, kWh (kJ, kWh)
$\dot{E}$	Energy flow rate, Btu/s, kW (kJ/s, kW)
f	D'Arcy-Weisbach friction factor, dimensionless
f_T	Friction factor in zone of complete turbulence (dimensionless)
F	Force, lb_f, (N) (N = newton)
F_a	Area factor for thermal expansion of primary elements (see Fig. B8.22)
Fr	Froude number, dimensionless
F_{wa}	Approach velocity factor defined by Eq. (B8.42), dimensionless
g	Acceleration due to gravity (local), ft/s^2 (m/s^2)
g_c	32.174 ($\text{lb}_\text{m}\cdot$ft)/($\text{lb}_\text{f}\cdot\text{s}^2$), dimensional conversion factor (does not exist in SI units)
g_s	32.174 ft/s^2 (9.80665 m/s^2)—standard (normal) acceleration due to gravity (standard acceleration of free fall)
$\dot{G} = \dot{m}/A$	Mass flux, lb_m/($\text{ft}^2\cdot$s) (kg/($\text{m}^2\cdot$s))
$\dot{G}_c$	Maximum (critical) mass flux, lb_m/($\text{ft}^2\cdot$s) (kg/($\text{m}^2\cdot$s))
$\dot{G}_{fs}$	Superficial mass flux of liquid phase, lb_m/($\text{ft}^2\cdot$s) (kg/($\text{m}^2\cdot$s))
$\dot{G}_{gs}$	Superficial mass flux of gaseous phase, lb_m/($\text{ft}^2\cdot$s) (kg/($\text{m}^2\cdot$s))
h	Specific enthalpy (static), Btu/lb_m (kJ/kg)
h_f	Specific enthalpy of liquid phase, Btu/lb_m (kJ/kg)
h_g	Specific enthalpy of gaseous phase, Btu/lb_m (kJ/kg)
h_{fg}	Latent heat of vaporization ($h_g - h_f$), Btu/lb_m (kJ/kg)
h_0	Stagnation enthalpy, Btu/lb_m (kJ/kg)
H	Enthalpy, Btu (kJ)
H_f	Loss of static pressure head, ft (m)
$j_f = \dot{G}_{fs}\, v_f$	Superficial velocity (volumetric flux) of liquid phase, ft/s (m/s)
$j_g = \dot{G}_{gs}\, v_g$	Superficial velocity (volumetric flux) of gaseous phase, ft/s (m/s)
J	778.169 ft · lb_f/Btu; mechanical equivalent of heat, dimensional conversion factor (does not exist in SI units)
k	C_p/C_v—isentropic exponent, dimensionless
K	Flow resistance coefficient (K-factor), dimensionless
L	Length, ft (m)
m	Mass, lb_m (kg)
$\dot{m}$	Mass flow rate, lb_m/s (kg/s)

Ma	w/c—Mach number, dimensionless
p	Absolute pressure, $\mathrm{lb_f/ft^2}$, $\mathrm{lb_f/in^2}$ = psia ($\mathrm{N/m^2}$ = Pa, kPa, bar; Pa − pascal, 1 bar = 10^5 Pa = 100 kPa)
p_g	$p - p_{\mathrm{amb}}$, gauge pressure (p_{amb} is the ambient pressure expressed in the same units as p)
p_o	Stagnation pressure, $\mathrm{lb_f/ft^2}$, $\mathrm{lb}_f/\mathrm{in}^2$ ($\mathrm{N/m^2}$, kPa, bar)
P	Power, kW (kW)
q	Heat per unit mass, $\mathrm{Btu/lb_m}$ (kJ/kg)
Q	Heat, Btu (kJ)
$\dot{Q}$	Heat flow rate, Btu/s (kJ/s)
r_h	Hydraulic radius, ft (mm)
R	Gas constant, $(\mathrm{ft \cdot lb_f})/(\mathrm{lb_m \cdot {}^\circ R})$ $((\mathrm{N \cdot m})/(\mathrm{kg \cdot K}))$ where $1\ \mathrm{N \cdot m} = 1\ \mathrm{J}$)
Re	Reynolds number, dimensionless
s	Specific entropy, $\mathrm{Btu/(lb_m \cdot {}^\circ R)}$ $(\mathrm{kJ/(kg \cdot K)})$
s_f	Specific entropy of liquid phase, $\mathrm{Btu/(lb_m \cdot {}^\circ R)}$ $(\mathrm{kJ/(kg \cdot K)})$
s_g	Specific entropy of gaseous phase, $\mathrm{Btu/(lb_m \cdot {}^\circ R)}$ $(\mathrm{kJ/(kg \cdot K)})$
s_{fg}	$s_g - s_f$, $\mathrm{Btu/(lb_m \cdot {}^\circ R)}$ $(\mathrm{kJ/(kg \cdot K)})$
s_0	Stagnation entropy, $\mathrm{Btu/(lb_m \cdot {}^\circ R)}$ $(\mathrm{kJ/(kg \cdot K)})$
S	Entropy, Btu/°R (kJ/K)
S^*	Slip ratio, dimensionless
t	Time, s, h (s, h)
t_F	°F (t_C = Celsius temperature, °C)
T	Thermodynamic temperature, °R (K)
T_o	Stagnation temperature, °R (K)
u	Specific internal energy, $\mathrm{Btu/lb_m}$ (kJ/kg)
U	Internal energy, Btu (kJ)
v	Specific volume, $\mathrm{ft^3/lb_m}$; $(\mathrm{m^3/kg})$
v_f	Specific volume of saturated liquid, $\mathrm{ft^3/lb_m}$ $(\mathrm{m^3/kg})$
v_g	Specific volume of saturated steam, $\mathrm{ft^3/lb_m}$ $(\mathrm{m^3/kg})$
v_{fg}	$v_g - v_f$, $\mathrm{ft^3/lb_m}$ $(\mathrm{m^3/kg})$
V	Volume, $\mathrm{ft^3}$ ($\mathrm{m^3}$, 1 = liter)
$\dot{V}$	Volumetric flow rate, $\mathrm{ft^3/h}$ ($\mathrm{m^3/h}$, l/s)
w	Velocity, ft/s (m/s)
W	Work, $\mathrm{ft \cdot lb_f}$ (kJ)
$\dot{W}_t$	Technical work rate (power), $\mathrm{ft \cdot lb_f/s}$, kW (kW)
x	Mass quality of steam, dimensionless
y	Distance to fixed surface, ft (m)
z	Elevation, ft (m)

Greek Symbols

α	Void fraction, dimensionless
α_s	Quantity defined by Eq. (B8.61)
β	d/D, dimensionless diameter ratio
β_s	Critical pressure ratio, dimensionless
γ	Specific weight, $\mathrm{lb_f/ft^3}$; $(\mathrm{N/m^3})$
ε	Absolute roughness, ft (the same unit as the pipe diameter D); (mm)
μ	Dynamic (absolute) viscosity, $(\mathrm{lb_f \cdot s})/\mathrm{ft^2}$ $((\mathrm{N \cdot s})/\mathrm{m^2})$
μ_f	Dynamic viscosity of liquid phase, $(\mathrm{lb_f \cdot s})/\mathrm{ft^2}$ $((\mathrm{N \cdot s})/\mathrm{m^2})$
μ_g	Dynamic viscosity of gaseous phase, $(\mathrm{lb_f \cdot s})/\mathrm{ft^2}$ $((\mathrm{N \cdot s})/\mathrm{m^2})$
ν	Kinematic viscosity, $\mathrm{ft^2/s}$ $(\mathrm{m^2/s})$
ν_f	Kinematic viscosity of liquid phase, $\mathrm{ft^2/s}$ $(\mathrm{m^2/s})$
ν_g	Kinematic viscosity of gaseous phase, $\mathrm{ft^2/s}$ $(\mathrm{m^2/s})$
π	Pi, approximately 3.14159, dimensionless
ρ	Density, $\mathrm{lb_m/ft^3}$; $(\mathrm{kg/m^3})$
ρ_f	Density of gaseous phase, $\mathrm{lb_m/ft^3}$ $(\mathrm{kg/m^3})$
ρ_g	Density of liquid phase, $\mathrm{lb_m/ft^3}$ $(\mathrm{kg/m^3})$
τ	Shearing stress, $\mathrm{lb_f/ft^2}$ $(\mathrm{N/m^2})$
T	Thrust, lb_f (N)
Ψ^2_LO	Two-phase pressure drop multiplier, dimensionless
Ψ_s	Quantity defined by Eq. (B8.52)

Subscripts

f, l	Liquid or water phase, saturated liquid
g	Steam phase, saturated steam

Basic Fluid Properties

A *fluid* is a substance which can flow and which deforms continuously under the action of shearing forces. Fluids offer no resistance to distortion of form; they yield continuously to tangential forces, no matter how small. Ordinarily, fluids are classified as being liquids or gases. Some classifications also include the vapor form within the group of fluids.

Liquids change volume and density very slightly with considerable variation in pressure, and when the pressure is removed, they do not dilate significantly. They are practically incompressible.

A *gas* is a fluid which tends to expand to fill completely any vessel in which it is contained. It is easily compressed, and a change in pressure is accompanied by a considerable change in its volume and density.

A *perfect (or ideal) gas* satisfies two conditions: (1) it obeys the Clapeyron equation $pV = mRT$ at all pressures, and (2) its specific heats are constant regardless of pressures and temperatures. In (1) above, p, V, and T are pressure, volume, and absolute temperature, respectively, and m and R represent the mass of gas and the gas constant, all in proper units. From (2) it follows also that the specific-heat ratio, $k = c_p/c_v$, is also constant.

The behavior of real gases is more complex. Real gases at low pressure tend to obey perfect gas law. As the pressure increases, however, the discrepancy increases and becomes serious near the critical point. If higher degrees of accuracy are required, textbooks in thermodynamics list corrections (as, for example, van der Waals' equation) which take into account deviations from ideal conformance. For practical purposes, gas and steam properties are published in the form of tables, charts, and appropriate computer programs. For example, the ASME (American Society of Mechanical Engineers) steam tables[5] are accompanied by computer diskettes that contain a steam properties calculation program. This FORTRAN source code may be copied, compiled, and utilized in compiled code of other programs.

Survey of Dimensions and Units

Dimensions, although discussed in other sections of this handbook, are briefly reviewed here to recall some fundamentals. The proper use of units and dimensions will save time and avoid errors. It is a good practice to include the units of all physical quantities, as well as their magnitudes, in performed calculations.

A *dimension* is a general expression for a particular kind of physical quantity (e.g., length, mass, time). A *unit* is a reference standard used to measure a physical quantity (e.g., one meter, one inch, and one foot are alternative units of the dimension length).

Four fundamental dimensions are required for analyses of thermodynamic or/ and fluid flow systems. Length, mass, time, and temperature are usually chosen.

U.S. Customary Units. The U.S. Customary Units (English system of dimensions and units) belong to the group of engineering systems where force instead of mass is a base dimension and the mass unit is derived from Newton's relationship that force equals mass times acceleration:

$$F = ma \tag{B8.1}$$

Then, the derived unit of mass in this system is $(\mathrm{lb_f} \cdot \mathrm{s}^2)/\mathrm{ft} = 1$ slug. A *slug* is the mass that can be accelerated at the rate of 1 $\mathrm{ft/s^2}$ by a force of 1 standard pound-force. By definition, 1 standard pound-force will also accelerate 1 pound-mass at the rate of 32.174 $\mathrm{ft/s^2}$. It follows that the slug is the mass of size 32.174 times that of the pound-mass (Fig. B8.1), and $g_c = 32.174\ \mathrm{lb_m/slug} = 32.174\ (\mathrm{lb}_m \cdot \mathrm{ft})/(\mathrm{lb_f} \cdot \mathrm{s}^2)$ is the dimensional conversion factor between the two systems of dimensions (based on mass versus that based on force). The density ρ is the mass per unit volume of the fluid and is not to be confused with specific weight γ, the weight per unit volume. The interrelation of density and specific weight is $\gamma = \rho g/g_c$. In thermodynamic calculations, this system is still using the unit of mass $\mathrm{lb_m}$ (for example, $Q = mc\,\Delta T$).

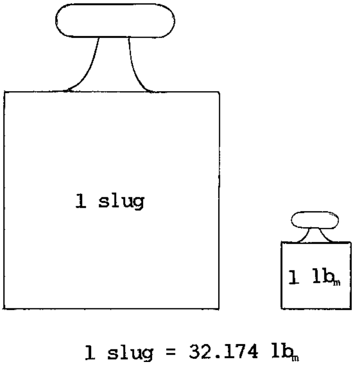

FIGURE B8.1 Slug versus pound mass.

Click for view of double page spread

TABLE B8.1 Conversion Factors for Pressure

To obtain → Multiply, by ↓	atm	bar	$\frac{\text{lbf}}{\text{in.}^2}$	in. Hg (0°C)
atm	1	1.013 25	$\frac{1\,013\,250 \times 2.54^2}{980.665 \times 453.592\,37}$ = 14.695 948 8	$\frac{1\,013\,250/980.665}{13.595\,088\,9 \times 2.54}$ = 29.921 280 0
bar	$\frac{1.0}{1.013\,25}$ = 0.986 923 267	1	$\frac{2.54^2 \times 10^6}{980.665 \times 453.592\,37}$ = 14.503 773 8	$\frac{10^6/980.665}{13.595\,088\,9 \times 2.54}$ = 29.530 007 4
$\frac{\text{lbf}}{\text{in.}^2}$	$\frac{980.665 \times 453.592\,37}{1\,013\,250 \times 2.54^2}$ = 0.068 045 963 9	$\frac{980.665 \times 453.592\,37}{2.54^2 \times 10^6}$ = 0.068 947 572 9	1	$\frac{453.592\,37/2.54^3}{13.595\,088\,9}$ = 2.036 022 34
in. Hg (0 C)	$\frac{13.595\,088\,9 \times 2.54}{1\,013\,250/980.665}$ = 0.033 421 030 1	$\frac{13.595\,088\,9 \times 2.54}{10^6/980.665}$ = 0.033 863 858 8	$\frac{13.595\,088\,9 \times 2.54^3}{453.592\,37}$ = 0.491 153 746	1
ft H_2O (20 C)	$\frac{0.998\,278\,282 \times 30.48}{1\,013\,250/980.665}$ = 0.029 449 006 6	$\frac{0.998\,278\,282 \times 30.48}{10^6/980.665}$ = 0.029 839 205 9	$\frac{0.998\,278\,282 \times 12}{453.592\,37/2.54^3}$ = 0.432 781 092	$\frac{0.998\,278\,282 \times 12}{13.595\,088\,9}$ = 0.881 151 971
mm Hg (0 C)	$\frac{13.595\,088\,9}{10\,132\,500/980.665}$ = 0.001 315 788 59	$\frac{13.595\,088\,9}{10^7/980.665}$ = 0.001 333 222 79	$\frac{13.595\,088\,9 \times 2.54^2}{453.592\,37 \times 10}$ = 0.019 336 761 7	$\frac{1.0}{25.4}$ = 0.039 370 078 7
$\frac{\text{kp}}{\text{cm}^2}$	$\frac{980.665}{1\,013.25}$ = 0.967 841 105	0.980 665	$\frac{2.54^2 \times 10^3}{453.592\,37}$ = 14.223 343 3	$\frac{10^3}{13.595\,088\,9 \times 2.54}$ = 28.959 044 7
kPa	$\frac{1.0}{101.325}$ = 0.009 869 232 67	0.01	$\frac{2.54^2 \times 10^4}{980.665 \times 453.592\,37}$ = 0.145 037 738	$\frac{10^4/980.665}{13.595\,0889 \times 2.54}$ = 0.295 300 074

Source: Ref. 5.

	ft H_2O (20°C)	mm Hg (0°C)	$\frac{\text{kp}}{\text{cm}^2}$	kPa
	$\frac{1\,013\,250/980.665}{0.998\,278\,282 \times 30.48}$ $=33.957\,002\,9$	$\frac{10\,132\,500/980.665}{13.595\,088\,9}$ $= 760.000\,512$	$\frac{1.013\,25}{0.980\,665}$ $= 1.033\,227\,45$	101.325
	$\frac{10^6/980.665}{0.998\,278\,282 \times 30.48}$ $= 33.512\,956\,2$	$\frac{10^7/980.665}{13.595\,088\,9}$ $= 750.062\,188$	$\frac{10^3}{980.665}$ $= 1.019\,716\,21$	100
	$\frac{453.592\,37/2.54^3}{0.998\,278\,282 \times 12}$ $= 2.310\,636\,99$	$\frac{453.592\,37 \times 10}{13.595\,088\,9 \times 2.54^2}$ $= 51.714\,967\,4$	$\frac{453.592\,37}{2.54^2 \times 10^3}$ $= 0.070\,306\,958\,0$	$\frac{980.665 \times 453.592\,37}{2.54^2 \times 10^4}$ $= 6.894\,757\,29$
	$\frac{13.595\,088\,9}{0.998\,278\,282 \times 12}$ $= 1.134\,878\,01$	25.4	$\frac{13.595\,088\,9 \times 2.54}{10^3}$ $= 0.034\,531\,525\,8$	$\frac{13.595\,088\,9 \times 2.54}{10^4/980.665}$ $= 3.386\,385\,88$
	1	$\frac{9.982\,782\,82 \times 30.48}{13.595\,088\,9}$ $= 22.381\,260\,1$	$\frac{0.998\,278\,282 \times 30.48}{10^3}$ $= 0.030\,427\,522\,0$	$\frac{0.998\,278\,282 \times 30.48}{10^4/980.665}$ $= 2.983\,920\,59$
	$\frac{13.595\,088\,9}{9.982\,782\,82 \times 30.48}$ $= 0.044\,680\,236\,8$	1	$13.595\,088\,9 \times 10^{-4}$ $= 0.001\,359\,508\,89$	$\frac{13.595\,088\,9}{10^5/980.665}$ $= 0.133\,322\,279$
	$\frac{10^3}{0.998\,278\,282 \times 30.48}$ $= 32.864\,983\,2$	$\frac{10^4}{13.595\,088\,9}$ $= 735.559\,736$	1	$\frac{9.806\,65}{10^{-1}}$ $= 98.066\,5$
	$\frac{10^4/980.665}{0.998\,278\,282 \times 30.48}$ $= 0.335\,129\,562$	$\frac{10^5/980.665}{13.595\,088\,9}$ $= 7.500\,621\,88$	$\frac{10^{-1}}{9.806\,65}$ $= 0.010\,197\,162$	1

TABLE B8.2 Conversion Factors for Specific Volume

To obtain → Multiply, by ↓	$\frac{\text{ft}^3}{\text{lbm}}$	$\frac{\text{in}^3}{\text{lbm}}$	$\frac{\text{US gal}}{\text{lbm}}$	$\frac{\text{liter}}{\text{kg}}$	$\frac{\text{m}^3}{\text{kg}}$
$\frac{\text{ft}^3}{\text{lbm}}$	1	1 728	$\frac{1\,728}{231}$ $= 7.480\,519\,48$	$\frac{30.48^3}{453.592\,37}$ $= 62.427\,960\,6$	$\frac{30.48^3 \times 10^{-6}}{0.453\,592\,37}$ $= 0.062\,427\,960\,6$
$\frac{\text{in}^3}{\text{lbm}}$	$\frac{1.0}{1\,728}$ $= 0.000\,578\,703\,704$	1	$\frac{1.0}{231}$ $= 0.004\,329\,004\,33$	$\frac{2.54^3}{453.592\,37}$ $= 0.036\,127\,292\,0$	$\frac{2.54^3 \times 10^{-6}}{0.453\,592\,37}$ $= 0.000\,036\,127\,292$
$\frac{\text{US gal}}{\text{lbm}}$	$\frac{231}{1\,728}$ $= 0.133\,680\,556$	231	1	$\frac{231 \times 2.54^3}{453.592\,37}$ $= 8.345\,404\,45$	$\frac{231 \times 2.54^3 \times 10^{-6}}{0.453\,592\,37}$ $= 0.008\,345\,404\,45$
$\frac{\text{liter}}{\text{kg}}$	$\frac{453.592\,37}{30.48^3}$ $= 0.016\,018\,463\,4$	$\frac{453.592\,37}{2.54^3}$ $= 27.679\,904\,7$	$\frac{453.592\,37}{231 \times 2.54^3}$ $= 0.119\,826\,427$	1	0.001
$\frac{\text{m}^3}{\text{kg}}$	$\frac{0.453\,592\,37}{30.48^3 \times 10^{-6}}$ $= 16.018\,463\,4$	$\frac{0.453\,592\,37}{2.54^3 \times 10^{-6}}$ $= 27\,679.904\,7$	$\frac{0.453\,592\,37}{231 \times 2.54^3 \times 10^{-6}}$ $= 119.826\,427$	1000	1

Source: Ref. 5.

Also, the interconversion between heat expressed by British thermal units, and work, expressed by ft · lb$_f$, is required in this dimensional system (J = 778.169 ft · lb$_f$/Btu).

International System. The International System "SI" (Systeme international d'unites) of units is founded on four base units: meter (m) of length, kilogram (kg) of mass, second of time, and kelvin (K) of thermodynamic temperature.[6] It must be explained that the Celsius temperature scale is the commonly used scale for temperature measurements in metric systems. The Celsius scale is not in itself part of the SI, but a difference of one degree on that scale equals one kelvin. Zero on the thermodynamic scale is fixed by convention to be 273.15 kelvin (K) below zero degrees Celsius.

When two or more units expressed in *base* SI units are multiplied or divided as required to obtain derived quantities, the result is a *unit value.* No numerical constant (dimensional conversion factor) is introduced. Such units are called *coherent.* SI is a coherent system of units. For some derived SI units, special names and symbols exist; for example, force expressed by 1 kg · m/s^2 has a derived name *newton* (N), pressure expressed by 1 N/m^2 has a derived name *pascal* (Pa), energy expressed by 1 N · m has a derived name *joule* (J), power expressed by 1 J/s has a derived name *watt* (W), and so forth. There are certain units outside the SI which are recognized as having to be retained because of their practical importance. As is general practice in the power industry worldwide, 1 bar = 10^5 Pa = 100 kPa (pressure expressed in bars is close to that expressed in *atmospheres*) has been used as the unit for absolute pressure. The symbol p_g is recommended for gauge pressure, defined as $p_g = p - p_{amb}$, where p_{amb} is the ambient pressure. Other recognized units outside the SI are: 1 minute (min) = 60 s, 1 hour (h) = 60 min, 1 day (d) = 24 h, 1 litre (l) = 1 dm^3, 1 tonne (t) = 10^3 kg.

In order to avoid large or small numerical values, decimal multiples of the SI units are added to the coherent system within the framework of the SI. They are formed by means of the following SI prefixes. Some of them are: G (giga) = 10^9, M (mega) = 10^6, k (kilo) = 10^3, h (hecto) = 10^2, d (deci) = 10^{-1}, c (centi) = 10^{-2}, m (milli) = 10^{-3}, μ (micro) = 10^{-6}. Therefore, for example, the compound prefix for 1 mm^2/s = (10^{-3} m)^2/s is equal to 10^{-6} m^2/s. The choice of the appropriate multiple of an SI unit is governed by convenience. The multiple chosen for a particular application is the one which will lead to numerical values within a practical range. For certain quantities in particular applications, the same multiple is customarily used; for example, the millimeter is used for dimensions in most mechanical engineering drawings.

Because of the increasing international commitment of U.S. engineering, industry, and commerce, the need for an accelerated growth in acceptance of the capability of SI units by the engineering profession is recognized. However, for this edition of the *Piping Handbook,* the English units of the engineering system of dimensions and units have been recommended. As a result of this recommendation, all equations in this chapter are written in such a way that the dimensional conversion factors (g_c, J) must be used. In parentheses, after all, the corresponding SI units and calculated values are presented. For those who must deliver calculation results in other units, useful conversion factors are given in Tables B8.1 through B8.6.

Click for view of double page spread

TABLE B8.3 Conversion Factors for Specific Enthalpy and Specific Entropy

To obtain → Multiply, by ↓	$\frac{\text{Btu}}{\text{lbm}}$	$\frac{\text{ft} \times \text{lbf}}{\text{lbm}}$	$\frac{\text{hp} \times \text{hr}}{\text{lbm}}$
$\frac{\text{Btu}}{\text{lbm}}$	1	$\frac{2.326 \times 10^7}{980.665 \times 30.48}$ = 778.169 262	$\frac{2.326}{980.665 \times 30.48 \times 0.198}$ $= 3.930\,147\,79 \times 10^{-4}$
$\frac{\text{ft} \times \text{lbf}}{\text{lbm}}$	$\frac{980.665 \times 30.48}{2.326 \times 10^7}$ = 0.001 285 067 46	1	$\frac{1.0}{1\,980\,000}$ $= 5.050\,505\,05 \times 10^{-7}$
$\frac{\text{hp} \times \text{hr}}{\text{lbm}}$	$\frac{980.665 \times 30.48 \times 0.198}{2.326}$ = 2 544.433 58	1 980 000	1
$\frac{\text{lbf/in.}^2}{\text{lbm/ft}^3}$	$\frac{980.665 \times 30.48 \times 144}{2.326 \times 10^7}$ = 0.185 049 715	144	$\frac{144}{1\,980\,000}$ $= 7.272\,727\,27 \times 10^{-5}$
$\frac{\text{kp} \times \text{m}}{\text{g}}$	$\frac{9.806\,65}{2.326}$ = 4.216 100 60	$\frac{10^5}{30.48}$ = 3 280.839 90	$\frac{1.0}{30.48 \times 19.8}$ = 0.001 656 989 85
$\frac{\text{kcal}}{\text{g}}$	$\frac{4\,186.8}{2.326}$ = 1800	$\frac{4\,186.8 \times 10^7}{980.665 \times 30.48}$ = 1 400 704.67	$\frac{4\,186.8 \times 10^3}{980.665 \times 30.48 \times 198}$ = 0.707 426 602
$\frac{\text{kJ}}{\text{kg}}$	$\frac{1.0}{2.326}$ = 0.429 922 614	$\frac{10^7}{980.665 \times 30.48}$ = 334.552 563	$\frac{10^3}{980.665 \times 30.48 \times 198}$ $= 1.689\,659\,41 \times 10^{-4}$

Source: Ref. 5.

$\frac{\text{lbf/in.}^2}{\text{lbm/ft}^3}$	$\frac{\text{kp} \times \text{m}}{\text{g}}$	$\frac{\text{kcal}}{\text{g}}$	$\frac{\text{kJ}}{\text{kg}}$
$\frac{2.326 \times 10^7}{980.665 \times 30.48 \times 144}$ $=5.403\ 953\ 21$	$\frac{2.326}{9.806\,65}$ $= 0.237\ 185\ 991$	$\frac{2.326}{4\,186.8}$ $= 5.555\ 555\ 6 \times 10^{-4}$	2.326
$\frac{1.0}{144}$ $= 0.069\ 444\ 444\ 4$	30.48×10^{-5} $= 0.000\ 304\ 8$	$\frac{980.665 \times 30.48}{4\,186.8 \times 10^7}$ $= 7.139\ 263\ 69 \times 10^{-7}$	$980.665 \times 30.48 \times 10^{-7}$ $= 0.002\ 989\ 066\ 920$
$\frac{1\,980\,000}{144}$ $= 13\ 750$	30.48×19.8 $= 603.504$	$\frac{980.665 \times 30.48}{4\,186.8/0.198}$ $= 1.413\ 574\ 21$	$\frac{980.665 \times 30.48 \times 198}{1000}$ $= 5\ 918.352\ 50$
1	$30.48 \times 144 \times 10^{-5}$ $= 0.043\ 891\ 2$	$\frac{980.665 \times 30.48 \times 144}{4\,186.8 \times 10^7}$ $= 1.028\ 053\ 97 \times 10^{-4}$	$\frac{980.665 \times 30.48 \times 144}{10^7}$ $= 0.430\ 425\ 636$
$\frac{10^5}{30.48 \times 144}$ $= 22.783\ 610\ 4$	1	$\frac{9.806\,65}{4\,186.8}$ $= 0.002\ 342\ 278\ 11$	9.806 65
$\frac{4\,186.8 \times 10^7}{980.665 \times 30.48 \times 144}$ $= 9\ 727.115\ 78$	$\frac{4\,186.8}{9.806\,65}$ $= 426.934\ 784$	1	4 186.8
$\frac{10^7}{980.665 \times 30.48 \times 144}$ $= 2.323\ 281\ 69$	$\frac{1.0}{9.806\,65}$ $= 0.101\ 971\ 621$	$\frac{1.0}{4\,186.8}$ $= 2.388\ 458\ 97 \times 10^{-4}$	1

Click for view of double page spread

TABLE B8.4 Conversion Factors for Specific Entropy, Specific Heat, and Gas Constant

To obtain → Multiply, by ↓	$\frac{\text{Btu}}{\text{lbm} \times \text{R}}$	$\frac{\text{ft} \times \text{lbf}}{\text{lbm} \times \text{R}}$	$\frac{\text{kw} \times \text{hr}}{\text{lbm} \times \text{R}}$
$\frac{\text{Btu}}{\text{lbm} \times \text{R}}$	1	$\frac{2.326 \times 10^7}{980.665 \times 30.48}$ = 778.169 262	$\frac{2.326 \times 453.592\,37}{3\,600\,000}$ = 0.000 293 071 070
$\frac{\text{ft} \times \text{lbf}}{\text{lbm} \times \text{R}}$	$\frac{980.665 \times 30.48}{2.326 \times 10^7}$ = 0.001 285 067 46	1	$\frac{453.592\,37 \times 30.48}{3.6 \times 10^{13}/980.665}$ = $3.766\,160\,97 \times 10^{-7}$
$\frac{\text{kw} \times \text{hr}}{\text{lbm} \times \text{R}}$	$\frac{3\,600\,000}{2.326 \times 453.592\,37}$ = 3 412.141 63	$\frac{3.6 \times 10^{13}/980.665}{453.592\,37 \times 30.48}$ = 2 655 223.73	1
$\frac{\text{bar} \times \text{cm}^3}{\text{g} \times \text{K}}$	$\frac{1.0}{41.868}$ = 0.023 884 589 7	$\frac{10^6}{30.48 \times 980.665 \times 9/5}$ = 18.586 253 5	$\frac{453.592\,37}{3.6 \times 10^7 \times 9/5}$ = $6.999\,882\,25 \times 10^{-6}$
$\frac{\text{kcal}}{\text{g} \times \text{K}}$	1000	$\frac{2\,326 \times 10^7}{980.665 \times 30.48}$ = 778 169.262	$\frac{2\,326 \times 453.592\,37}{3\,600\,000}$ = 0.293 071 070
$\frac{\text{kp} \times \text{m}}{\text{g} \times \text{K}}$	$\frac{9.806\,65}{4.186\,8}$ = 2.342 278 11	$\frac{10^5}{30.48 \times 9/5}$ = 1 822.688 83	$\frac{980.665 \times 453.592\,37}{3.6 \times 10^8 \times 9/5}$ = 0.000 686 453 953
$\frac{\text{kJ}}{\text{kg} \times \text{K}}$	$\frac{1.0}{4.186\,8}$ = 0.238 845 897	$\frac{10^7 \times 5/9}{980.665 \times 30.48}$ = 185.862 535	$\frac{453.592\,37}{3.6 \times 10^6 \times 9/5}$ = $6.999\,882\,25 \times 10^{-5}$

Source: Ref. 5.

$\frac{\text{bar} \times \text{cm}^3}{\text{g} \times \text{K}}$	$\frac{\text{kcal}}{\text{g} \times \text{K}}$	$\frac{\text{kp} \times \text{m}}{\text{g} \times \text{K}}$	$\frac{\text{kJ}}{\text{kg} \times \text{K}}$
41.868	0.001	$\frac{4.186\,8}{9.806\,65}$ = 0.426 934 784	4.186 8
$\frac{30.48 \times 980.665 \times 9/5}{10^6}$ = 0.053 803 204 6	$\frac{980.665 \times 30.48}{2\,326 \times 10^7}$ $= 1.285\,067\,46 \times 10^{-6}$	$30.48 \times 10^{-5} \times 9/5$ = 0.000 548 64	$\frac{980.665 \times 30.48 \times 10^{-7}}{5/9}$ = 0.005 380 320 46
$\frac{3.6 \times 10^7 \times 9/5}{453.592\,37}$ = 142 859.546	$\frac{3\,600\,000}{2\,326 \times 453.592\,37}$ = 3.412 141 63	$\frac{3.6 \times 10^8 \times 9/5}{980.665 \times 453.592\,37}$ = 1.456 761 95	$\frac{3.6 \times 10^6 \times 9/5}{453.592\,37}$ = 14 285.954 6
1	$\frac{1.0}{41\,868}$ $= 2.388\,458\,97 \times 10^{-5}$	$\frac{1.0}{98.066\,5}$ = 0.010 197 1621	0.1
41 868	1	$\frac{4\,186.8}{9.806\,65}$ = 426.934 784	4 186.8
98.066 5	$\frac{9.806\,65}{4\,186.8}$ = 0.002 342 278 11	1	9.806 65
10	$\frac{1.0}{4\,186.8}$ = 0.000 238 845 897	$\frac{1.0}{9.806\,65}$ = 0.101 971 621	1

TABLE B8.5 Conversion Factors for (Dynamic) Viscosity

To obtain → Multiply, by ↓	Pa × s *	$\frac{\text{lbf} \times \text{sec}}{\text{ft}^2}$	$\frac{\text{lbm}}{\text{ft} \times \text{sec}}$	$\frac{\text{lbm}}{\text{hr} \times \text{ft}}$	$\frac{\text{g}}{\text{cm} \times \text{sec}}$ (poise)	$\frac{\text{kg}}{\text{m} \times \text{sec}}$
Pa × s *	1	$\frac{(0.3048)^2}{9.80665 \times 0.453\,59237}$ $= 0.020\,885\,4342$	$\frac{0.3048}{0.453\,592\,37}$ $= 0.671\,968\,975$	$\frac{0.3048 \times 3600}{0.453\,592\,37}$ $= 2419.088\,31$	10	1
$\frac{\text{lbf sec}}{\text{ft}^2}$	$\frac{9.806\,65 \times 0.453\,592\,37}{(0.3048)^2}$ $= 47.880\,259\,0$	1	$\frac{980.665}{30.48}$ $= 32.174\,048\,6$	$\frac{980.665 \times 3\,600}{30.48}$ $= 115\,826.575$	$\frac{980.665 \times 453.592\,37}{30.48^2}$ $= 478.802\,590$	$\frac{980.665 \times 453.592\,37}{10 \times 30.48^2}$ $= 47.880\,259\,0$
$\frac{\text{lbm}}{\text{ft} \times \text{sec}}$	$\frac{0.453\,592\,37}{0.3048}$ $= 1.488\,163\,94$	$\frac{30.48}{980.665}$ $= 0.031\,080\,950\,2$	1	3 600	$\frac{453.592\,37}{30.48}$ $= 14.881\,639\,4$	$\frac{453.592\,37}{304.8}$ $= 1.488\,163\,94$
$\frac{\text{lbm}}{\text{hr} \times \text{ft}}$	$\frac{0.453\,592\,37}{0.3048 \times 3600}$ $= 0.413\,378\,873 \times 10^{-3}$	$\frac{30.48}{980.665 \times 3\,600}$ $= 8.633\,597\,27 \times 10^{-6}$	$\frac{1.0}{3\,600}$ $= 0.000\,277\,777\,778$	1	$\frac{453.592\,37}{30.48 \times 3\,600}$ $= 0.004\,133\,788\,73$	$\frac{453.592\,37}{304.8 \times 3\,600}$ $= 0.000\,413\,378\,873$
$\frac{\text{g}}{\text{cm} \times \text{sec}}$ (poise)	0.1	$\frac{30.48^2}{980.665 \times 453.592\,37}$ $= 0.002\,088\,543\,42$	$\frac{30.48}{453.592\,37}$ $= 0.067\,196\,897\,5$	$\frac{3\,600 \times 30.48}{453.592\,37}$ $= 241.908\,831$	1	0.1
$\frac{\text{kg}}{\text{m} \times \text{sec}}$	1	$\frac{10 \times 30.48^2}{980.665 \times 453.592\,37}$ $= 0.020\,885\,434\,2$	$\frac{304.8}{453.592\,37}$ $= 0.671\,968\,975$	$\frac{10 \times 3\,600 \times 30.48}{453.592\,37}$ $= 2\,419.088\,31$	10	1

* SI Units for ASME use.
Source: Ref. 5.

TABLE B8.6 Conversion Factors for Kinematic Viscosity

To obtain → Multiply, by ↓	$\frac{m^2}{s}$ *	$\frac{ft^2}{sec}$	$\frac{cm^2}{sec}$ (stoke)	$\frac{cm^2}{hr}$	$\frac{m^2}{hr}$
$\frac{m^2}{s}$ *	1	$\frac{1.0}{(0.3048)^2}$ $= 10.763\ 9104$	$(100)^2$ $= 10\ 000$	$(100)^2 \times 3600$ $= 36 \times 10^6$	3600
$\frac{ft^2}{sec}$	$(0.3048)^2$ $= 0.092\ 903\ 04$	1	$(30.48)^2$ $= 929.030\ 4$	$(30.48)^2 \times 3\ 600$ $= 3\ 344\ 509.440\ 000$	$(0.304\ 8)^2 \times 3\ 600$ $= 334.450\ 944\ 000$
$\frac{cm^2}{sec}$ (Stoke)	$\frac{1.0}{(100)^2}$ $= 10^{-4}$	$\frac{1.0}{(30.48)^2}$ $= 0.001\ 076\ 391\ 04$	1	3 600	$\frac{3\ 600}{(100)^2}$ $= 0.36$
$\frac{cm^2}{hr}$	$\frac{1.0}{(100)^2 \times 3600}$ $= 27.777\ 777\ 8 \times 10^{-9}$	$\frac{1.0}{(30.48)^2 \times 3600}$ $= 0.2\ 989\ 975\ 12 \times 10^{-6}$	$\frac{1.0}{3\ 600}$ $= 0.000\ 277\ 777\ 778$	1	$\frac{1.0}{(100)^2}$ $= 0.000\ 1$
$\frac{m^2}{hr}$	$\frac{1.0}{3600}$ $= 277.777\ 778 \times 10^{-6}$	$\frac{1.0}{(0.3048)^2 \times 3\ 600}$ $= 2.989\ 975\ 12 \times 10^{-3}$	$\frac{(100)^2}{3\ 600}$ $= 2.777\ 777\ 78$	$(100)^2$ $= 10\ 000$	1

* SI Units for ASME use.

Source: Ref. 5.

THEORETICAL BACKGROUND

Some basic fluid properties used in this chapter are discussed in the following paragraphs; for more detailed information see Refs. 1 and 2 listed at the end of this chapter.

Viscosity

It is an experimental fact that a fluid in immediate contact with a solid boundary has the same velocity as the boundary itself. For the case of Fig. B8.2, in which a fluid separates closely spaced parallel plates, the force F applied to the upper, moving plate, is directly proportional to the surface area A of the upper plate and its velocity w, and is inversely proportional to the distance y between the plates. The last statement is expressed in the form of Newton's law of viscosity:

$$F = \mu \frac{Aw}{y} \tag{B8.2}$$

in which μ is the proportionality factor and is called the *dynamic* (*or absolute*) *viscosity* of the fluid. *Poise* (P) and *stokes* (St) are special names for CGS units. They and their multiples should not be used together with SI units. Conversion factors for dynamic viscosity, from other units, are presented in Table B8.5.

Water at 68°F (20°C) has a dynamic viscosity of 1.002 centipoise (0.001 $\mathrm{N \cdot s/m^2}$ or $\mathrm{Pa \cdot s}$). The viscosity of liquids decreases with increasing temperature, but the viscosity of a gas increases with increasing temperature.

Because the shear stress is $\tau = F/A$, Equation (B8.2) could be written as $\tau = \mu\, w/y$ or in differential form as $\tau = \mu\, dw/dy$. The ratio dw/dy is called the *rate of angular deformation* of the fluid for one-dimensional flow. *Viscosity* is that property

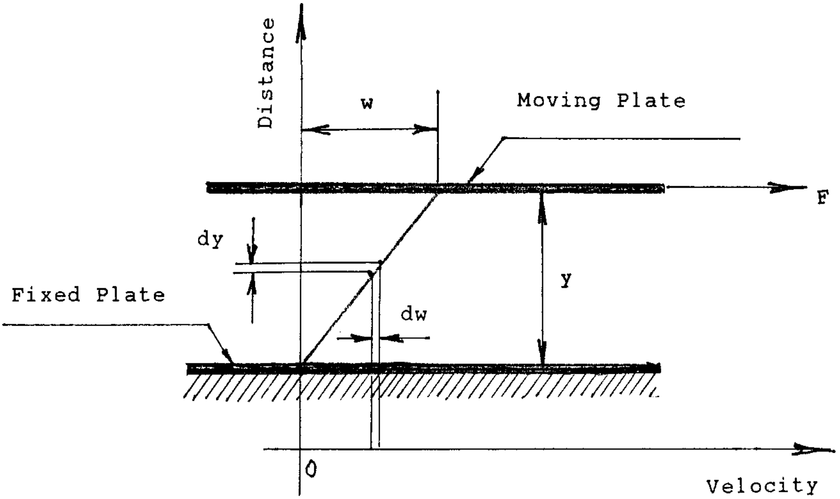

FIGURE B8.2 Established steady state velocity profile in the fluid.

of a fluid by virtue of which it offers resistance to shear. In Newtonian fluids, there is a linear relation between the applied shear stress and the resulting rate of deformation [μ = constant in Eq. (B8.2)]. In non-Newtonian fluids, this relationship is not linear. Gases and thin liquids tend to be Newtonian fluids, while thick hydrocarbons may be non-Newtonian.

The kinematic viscosity ν, which is the ratio of dynamic viscosity to mass density ρ, is:

$$\nu = \frac{\mu}{\rho} g_c \tag{B8.3}$$

Conversion factors for kinematic viscosity are presented in Table B8.6.

Pressure Variation in a Static Fluid

The static pressure existing at a point within a fluid body is known also as the *hydrostatic pressure.* In the case of gaseous fluids, the density of the fluid column is relatively small unless great vertical heights are involved. In such cases the average density of fluid should be used for the static pressure calculation. With denser fluids such as liquids, the increase in pressure due to depth within the liquid can be of great significance. When applied to the two-fluid mixture in a container filled with a gas at the pressure p_1, as shown in Fig. B8.3, the expression for static pressure at a horizontal plane located at distance z below the free surface is:

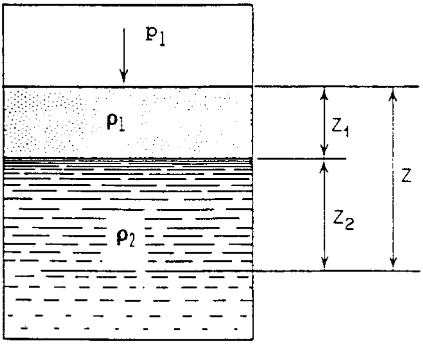

FIGURE B8.3 Hydrostatic pressure in two-fluid system.

$$p = p_1 + \frac{g}{g_c}(\rho_1 z_1 + \rho_2 z_2) \tag{B8.4}$$

Standard atmospheric pressure is defined as that pressure produced by a column of mercury of 760 mm length at a mercury density of 13.5950889 g/cm^3 at 32°F (0°C) and at an acceleration due to gravity of g_n = 32.174 ft/s^2 (9.80665 m/s^2). On this basis, then:

1 standard atmosphere = 14.6959488 psia (1.01325 bar)

For many engineering calculations, it is sufficiently accurate to use 14.7 psia as being equivalent to 1 standard atmosphere.

Continuity

Applying the law of conservation of mass to a flow process yields a mass balance, or continuity equation. The mass balance in physical processes is that the mass of

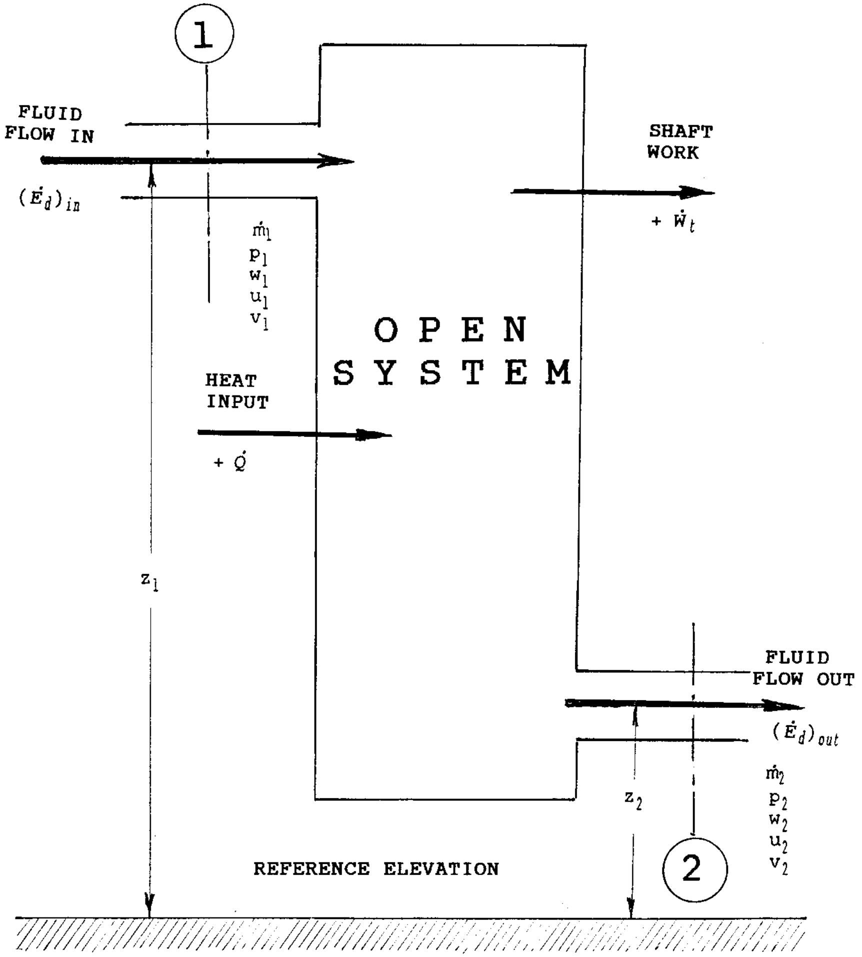
1
FLUID FLOW IN
$(\dot{E}_d)_{in}$
$\dot{m}_1$
p_1
w_1
u_1
v_1
SHAFT WORK
$+\dot{W}_t$
OPEN SYSTEM
HEAT INPUT
$+\dot{Q}$
z_1
FLUID FLOW OUT
$(\dot{E}_d)_{out}$
$\dot{m}_2$
p_2
w_2
u_2
v_2
z_2
2
REFERENCE ELEVATION

FIGURE B8.4 Energy balance in an open system.

substance added to the system is equal to the mass subtracted from the system, plus accumulation of any mass in the system.

Conservation of Energy

The first law of thermodynamics can be formulated as the principle of conservation of energy[2]:

$$E_{\text{in}} = \Delta E_s + E_{\text{out}} \tag{B8.5}$$

where E_{in} represents all types of energy added to the system within a defined control boundary during a specified time interval, ΔE_s is the change in the total energy of the system, and E_{out} represents all kinds of energy substracted from the system in the same time interval. In the steady-flow system $\Delta E_s = 0$, and

$$\dot{E}_{\text{in}} = \dot{E}_{\text{out}} \tag{B8.6}$$

With fluid flow through the system, as shown in Fig. B8.4, the energy entering (or leaving) this system by a duct (or a pipeline) will consist of potential (external), kinetic, and internal energy of the fluid, and also the external pumping work, the energy transmitted by a pump to force the fluid to flow continuously across the boundary of the system. Then the total rate of steady-flow energy transported in a duct (or a pipe) is:

$$\dot{E}_d = \dot{m}\left[\frac{1}{J}\left(pv + \frac{w^2}{2g_c} + \frac{g}{g_c}z\right) + u\right] \tag{B8.7}$$

where $J = 778.169$ (ft · lb$_f$)/Btu (dimensional conversion factor).

The sum of the specific internal energy u and the external pumping work $(p\,v)/J$

$$h = u + \frac{pv}{J} \tag{B8.8}$$

is called the *specific enthalpy*. Since, u, p, and v are all properties, then also h must be a state function or a property. The sum defined by h_o:

$$h_0 = h + \frac{w^2}{2g_c J} \tag{B8.9}$$

is called the *stagnation enthalpy*.

Then, for a steady state flow system presented in Fig. B8.4, with a mass flow rate of $\dot{m} = \dot{m}_1 = \dot{m}_2$, by using Eqs. (B8.6), (B8.7), and (B8.8) the following is found:

$$\dot{Q} - \frac{\dot{W}_t}{J} = \dot{m}\left[(h_2 - h_1) + \frac{(w_2^2 - w_1^2)}{2Jg_c} + \frac{g}{Jg_c}(z_2 - z_1)\right] \tag{B8.10}$$

In a differential form, per unit mass, this equation may be modified by introducing an internal friction term (viscous friction and other irreversible phenomena distinguishing a real fluid from an ideal one) to yield the following equation, which is known from literature as the *mechanical energy balance:*

$$d\left(\frac{w^2}{2g_c}\right) + \frac{g}{g_c}dz + v\,dp = -d'w_t - d'w_f \tag{B8.11}$$

where $d'w_t$ = specific "technical work" transmitted across the boundary of the system,

$d'w_f$ = specific work done against fluid friction.

STEADY SINGLE-PHASE INCOMPRESSIBLE FLOW IN PIPING

Characteristics of Incompressible Flow

Although there is no such thing in reality as an incompressible fluid, this term is applied to liquids. Yet sound waves, which are really pressure waves, travel through liquids. This is an evidence of the elasticity of liquids. In problems involving water hammer, it is necessary to consider the compressibility of the liquid. The compressibility of a liquid is expressed by its bulk modulus of elasticity which influences the wave speed in the liquid.

It should be explained here that when density changes of compressible fluids (gases or steam) are gradual and do not change by more than about 10 percent, the flow may be treated as incompressible with the use of an average density.

Bernoulli's equation is a special case of Eq. (B8.11) applied to nonviscous, incompressible fluids (ideal fluid) which do not exchange shaft work with surroundings:

$$v = \frac{1}{\rho} = \text{const}, \qquad d'w_f = 0, \qquad \text{and} \qquad d'w_t = 0$$

In real flow systems, however, the Bernoulli equation must be suplemented by a frictional head loss H_f (expressed in feet of a column of the fluid) and by a pump-head term H_p (total dynamic head, TDH, expressed in feet of a column of fluid). Then, for real systems the following is found:

$$\frac{w_1^2}{2g} + \frac{p_1}{\gamma} + z_1 + H_p = \frac{w_2^2}{2g} + \frac{p_2}{\gamma} + z_2 + H_f \tag{B8.12}$$

The frictional head loss is given by the following D'Arcy-Weisbach equation:

$$H_f = \frac{\Delta p}{\gamma} = f\frac{w^2}{2g}\frac{L}{D} \tag{B8.13}$$

and the corresponding pressure drop (expressed in lb_f/ft^2) is:

$$\Delta p = f\rho\frac{w^2}{2g_c}\frac{L}{D} \tag{B8.14}$$

where f is the D'Arcy-Weisbach friction factor, which is four times the Fanning friction factor used in some publications.

For laminar flow:

$$f = \frac{64}{\text{Re}} \tag{B8.15}$$

which plots as a straight line with a slope (-1) on the Moody diagram (Fig. B8.5). It applies to all roughnesses, as the head loss in laminar flow is independent of wall roughness. The Reynolds number is:

$$\text{Re} = \frac{Dw}{\nu} \tag{B8.16}$$

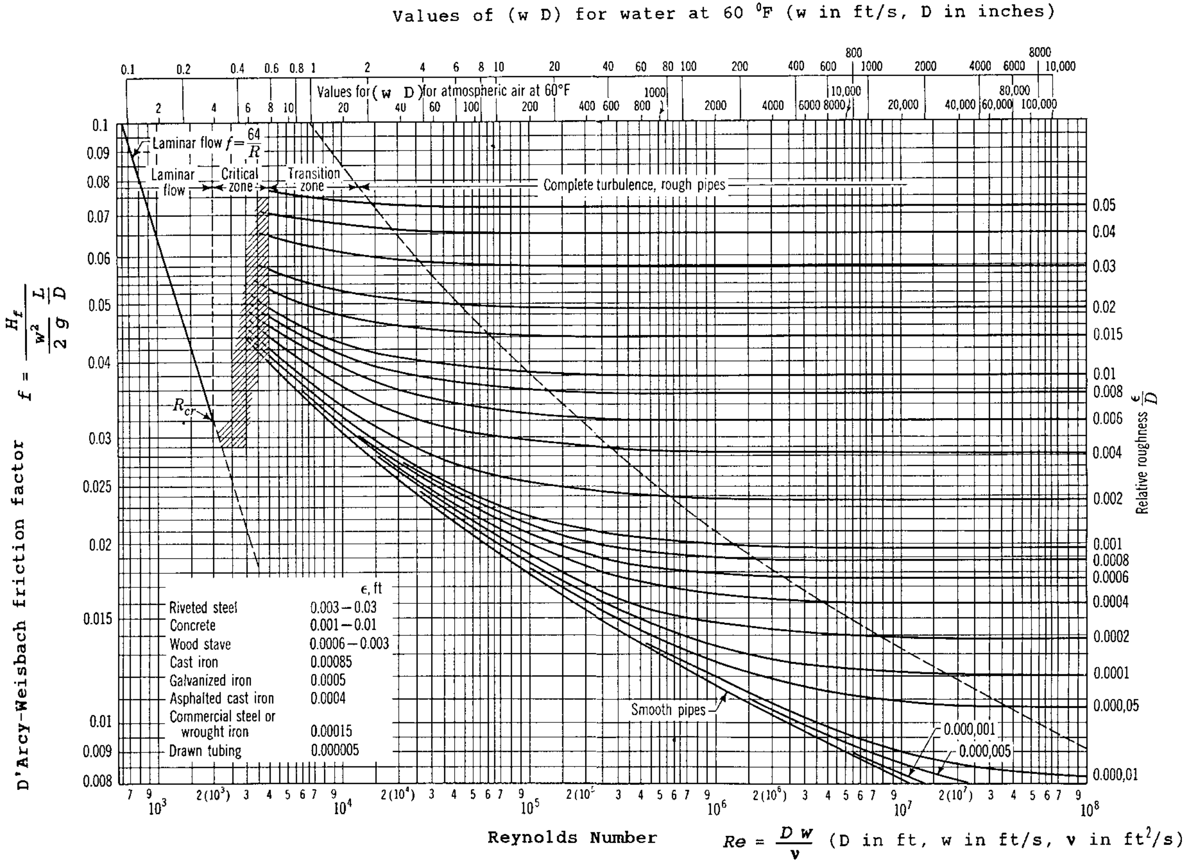

	ϵ, ft
Riveted steel	0.003 – 0.03
Concrete	0.001 – 0.01
Wood stave	0.0006 – 0.003
Cast iron	0.00085
Galvanized iron	0.0005
Asphalted cast iron	0.0004
Commercial steel or wrought iron	0.00015
Drawn tubing	0.000005

FIGURE B8.5 Moody diagram. (*From Ref. 1.*)

Expressions for calculating the loss of pressure in turbulent flow are based upon experimental data. An empirical transition function for commercial pipes for the region between smooth pipes and the complete turbulence zone (see the Moody diagram) has been developed by Colebrook:

$$\frac{1}{\sqrt{f}} = -0.86 \ln \left(\frac{\varepsilon/D}{3.7} + \frac{2.51}{\mathrm{Re}\sqrt{f}} \right) \tag{B8.17}$$

where the absolute roughness ε, expressed in feet (millimeters), is used as a measure of pipe wall irregularities of commercial pipes. Formula (B8.17) is the basis for the Moody diagram in the "transition zone" flow. The Moody diagram is widely accepted for hand calculations. For computerized calculations of the pressure drop, however, the Colebrook equation is built into the software.

Pressure losses which occur in piping systems due to bends, elbows, joints, valves, and so forth are called *form losses.* Recommended values of local flow resistance coefficients (K-factors) may be found in Refs. 7 and 8. Form losses may also be expressed in terms of the equivalent length L_e of pipe that has the same pressure-head loss for the same flow rate; thus

$$f \frac{L_e}{D} \frac{w^2}{2g} = K \frac{w^2}{2g} \tag{B8.18}$$

After solving for L_e:

$$L_e = \frac{KD}{f} \tag{B8.19}$$

Applications: Water Systems

General Design Considerations. Water system design requirements and design parameters are developed in the system descriptions which include piping and instrumentation diagrams (P&IDs), descriptions of the system individual components (pumps, valves, heat exchangers, etc.), design flow rates, valve alignments, control valve operation, and pipe sizes. Pipe sizes are determined by evaluation of water velocities in the system. Selection of velocities must consider many factors including:

- Pipe material
- Water quality
- System flow balance requirements
- Economic evaluation of pipe cost versus pumping costs
- Available pump head
- Water hammer prevention

Typical water flow velocities in ft/s (m/s) for various applications based on general industry practices are shown in Table B8.7.

A steady-state analysis of a water system is generally performed twice. The first calculation is needed to obtain data required for the purchase of the system components. This initial analysis is performed after the system description and

TABLE B8.7 Typical Water Flow Velocities

Condenser pump suction	3 ft/s (1 m/s)
Condenser pump discharge	10 ft/s (3 m/s)
Booster pump discharge	10 ft/s (3 m/s)
Feed pump suction (no deaerator)	10 ft/s (3 m/s)
(For systems with deaerators, the downcomer sizes should be optimized with a pump NPSH decay in mind—see section "Transient Flow Analysis")	
Feed pump discharge	20–25 ft/s (6–7.5 m/s)
Circulating water system	≤9 ft/s (3 m/s)
General service	5–10 ft/s (1.5–3 m/s)

Source: Stone & Webster

general arrangement drawings have been issued. The initial analysis proceeds as follows:

1. Issue the system description and general arrangement drawings.
2. Develop a preliminary piping layout based on P&IDs and general arrangement drawings.
3. Determine the system operating mode or modes (valve lineup, number of pumps, etc.) which are critical for equipment purchase.
4. Calculate the pressure drop in the piping for design flow rates.
5. Develop a system resistance curve.
6. Calculate the flow balance in branching systems.
7. Revise the system description (if required) to achieve desired system flow balance.
8. Develop a revised system resistance curve (if required).
9. Calculate values of parameters required for the purchase of system components (pump head, system pressures, control valve pressure drop, etc.).

The final steady-state hydraulic analysis of a system is usually performed after major equipment has been purchased and piping drawings have been prepared. This analysis is to confirm acceptable operation for all operating modes by reconciling the as-built piping and installed equipment with the initial analysis.

The final analysis proceeds as follows:

1. Determine the pressure drop in the system based on piping drawings and equipment suppliers data for design flow rates (if required).
2. Develop system resistance curves (if required).
3. Plot pump curves on the system resistance curve to determine the system flow rates.
4. Compare design flow rates with calculated flow rates for all operating modes.

Due to problems which occur during construction, the as-built drawings often differ from the piping drawings. In most instances, these changes are minor and do not affect the results of the analysis. Should any major changes occur during construction, the effect on the analysis results would need to be evaluated.

Piping Configurations. Piping systems may be arranged in series, in parallel, or as branching pipes. For pipes in series, the total pressure head loss is the sum of head losses in the pipe sections, and the flow rate is the same at all sections. For pipes in parallel, the pressure head loss is the same for each flow path, and the total flow rate is the sum of flows in parallel sections. For branching pipes, the analyst must combine the above two principles. The total energy at a junction must be the same for all branches of the pipe.

Analysis of a piping system begins with a determination of the pressure drop (pressure head loss) due to friction losses, form losses (in various types of piping components) and pressure losses in equipment for the design flow rate. For ease in evaluating the total system performance, the head loss should be calculated for each pipe branch separately. The manual head loss calculations often are done on pressure drop sheets. Calculations of head loss should include a schematic sketch of the piping layout. The calculation should be a clear record of the design basis for head loss calculations in order that as the design evolves, the significance of pipe changes is apparent. A second head loss calculation may be required if the pipeline is expected to operate at flow rates considerably different from the design flow rate.

Having calculated the head loss in each branch of the system for the design flow rate, the performance of the entire system can be calculated. System resistance curves, flow balances, pump design points, and system pressures are some of the products of the system analysis.

The complexity of the system analysis depends on the number of pipes in series, pipes in parallel, and pipe branches. Obviously the greater the number of pipes, the more complex the analysis becomes. The analysis is done either by manual calculation or by computer analysis. Computerized calculations are preferable.

Manual calculations are suited for relatively simple piping systems. Manual analysis with the use of graphs provides an easy method for analyzing systems with a number of pipes in parallel, pipes in series, and branching pipes. This technique is based on the assumption that head loss varies with the square of velocity. Table B8.8 presents flow data for water through various sizes of Schedule 40 steel pipe.

The hydraulic grade line (HGL) and energy grade line (EGL) are two useful engineering tools in the hydraulic design of any system in which a liquid is in a dynamic state.[1] The graphical representation with respect to any selected datum, of the static head for each point along the pipe under consideration as ordinate, plotted against distance along the pipe as the abscissa is called the *hydraulic grade line.* Similar graphical representation of the total pressure (or Bernoulli head: static + dynamic), as described by Eq. (B8.12), is called the *energy grade line.* Figure B8.6 illustrates the HGL and EGL for a sample system.

Economic Optimization of Line Sizes. The objective of this subject is balancing the savings in cost obtained by reduction in the size of the piping diameter against the increased cost of pumping equipment and power necessary to provide for increased pressure drop.

For given flows, as the pipe diameter decreases, the flow velocity increases, which decreases the cost of erected piping, including fittings, hangers, supports, and labor as represented by cost *a* in Fig. B8.7. However, the piping pressure drop ratio increases to the 5th power with reduction in the pipe internal diameter ratio, as shown in the accompanying table. The same is true with the pumping power, which is proportional to the pressure drop in the line, as represented by cost *b*

$d2/d1$	$(d1/d2)^5$
0.99	1.050
0.98	1.106
0.97	1.165
0.96	1.230
0.95	1.292
0.90	1.694
0.80	3.052
0.70	5.950

in Fig. B8.7. In addition, there is the cost of the pump and the pump drive, which increases as greater pumping power is required, as represented by cost *c*.

The total cost, which is the sum of these three costs ($T_{\mathrm{COST}} = a + b + c$) in \$/year, is shown on Fig. B8.7 as reaching a minimum value at the optimum flow velocity. The analysis for each piping system should consider the optimization of flow velocity (optimum internal diameter) of the pipe under consideration. It is important to note that cost *b* depends strongly on the plant operating mode or the load factor, and on other economic indicators for a particular project. Industry data containing updated prices of equipment, piping, and labor are needed to implement this optimization procedure.

Sample Problem B8.1. What is the pressure drop $p_A - p_B$ (see Fig. B8.8), when water at 200°F (93.3°C) flows in a piping system at the rate of $\dot{m} = 450{,}200$ $\mathrm{lb_m/h}$ (204,207 kg/h), $p_A = 500$ psia (34.47 bar)?

Pipe Data. For 6-in nominal size, schedule 40 pipe, the internal diameter $d = 6.065$ in, $D = 0.5054$ ft, $A = 0.200$ ft^2.

Properties of Fluid. From the ASME Steam Tables software (Ref. 5) for $T = 200°\mathrm{F}$ and $p = 500$ psia, the dynamic viscosity of water (see attached computer printout, Table B8.9) is

$$\mu = 63.43 * 10^{-7}\ (\mathrm{lb_f}\cdot \mathrm{s})/\mathrm{ft}^2$$

From the same computer printout, the specific volume of water at $T = 200°\mathrm{F}$ and $p = 500$ psia is

$$v = 0.01661\ \ \mathrm{ft^3/lb_m}$$

Then, the kinematic viscosity of water is [see Eq. (B8.3)]:

$$\nu = \frac{\mu}{\rho} g_c = (63.43 * 10^{-7})\,(0.01661)\,(32.174)$$

$$= 3.39 * 10^{-6}\ \ \mathrm{ft^2/s}$$

The flow velocity is calculated from the continuity equation

$$w = \frac{\dot{m}}{\rho A}$$

$$\text{where } \dot{m} = \frac{450{,}200}{3600} = 125.06\ \ \mathrm{lb_m/s}$$

TABLE B8.8 Flow of Water Through Schedule 40 Steel Pipe

Discharge		Pressure drop per 100 ft and velocity in Schedule 40 pipe for water at 60°F															
gal/min	ft^3/s	Velocity, ft/s	Press. drop, lb/in^2	Velocity, ft/s	Press. drop, lb/in^2	Velocity, ft/s	Press. drop, lb/in^2	Velocity, ft/s	Press. drop, lb/in^2	Velocity, ft/s	Press. drop, lb/in^2	Velocity, ft/s	Press. drop, lb/in^2	Velocity, ft/s	Press. drop, lb/in^2	Velocity, ft/s	Press. drop, lb/in^2
		⅛ in		¼ in		⅜ in		½ in									
0.2	0.000446	1.13	1.86	0.616	0.359												
0.3	0.000668	1.69	4.22	0.924	0.903	0.504	0.159	0.317	0.061	¾ in							
0.4	0.000891	2.26	6.98	1.23	1.61	0.672	0.345	0.422	0.086								
0.5	0.00111	2.82	10.5	1.54	2.39	0.840	0.539	0.528	0.167	0.301	0.033						
0.6	0.00134	3.39	14.7	1.85	3.29	1.01	0.751	0.633	0.240	0.361	0.041						
0.8	0.00178	4.52	25.0	2.46	5.44	1.34	1.25	0.844	0.408	0.481	0.102	1 in		1¼ in			
1	0.00223	5.65	37.2	3.08	8.28	1.68	1.85	1.06	0.600	0.602	0.155	0.371	0.048			1½ in	
2	0.00446	11.29	134.4	6.16	30.1	3.36	6.58	2.11	2.10	1.20	0.526	0.743	0.164	0.429	0.044		
3	0.00668			9.25	64.1	5.04	13.9	3.17	4.33	1.81	1.09	1.114	0.336	0.644	0.090	0.473	0.043
4	0.00891			12.33	111.2	6.72	23.9	4.22	7.42	2.41	1.83	1.49	0.565	0.858	0.150	0.630	0.071
5	0.01114	2 in				8.40	36.7	5.28	11.2	3.01	2.75	1.86	0.835	1.073	0.223	0.788	0.104
6	0.01337	0.574	0.044	2½ in		10.08	51.9	6.33	15.8	3.61	3.84	2.23	1.17	1.29	0.309	0.946	0.145
8	0.01782	0.765	0.073			13.44	91.1	8.45	27.7	4.81	6.60	2.97	1.99	1.72	0.518	1.26	0.241
10	0.02228	0.956	0.108	0.670	0.046			10.56	42.4	6.02	9.99	3.71	2.99	2.15	0.774	1.58	0.361
15	0.03342	1.43	0.224	1.01	0.094	3 in				9.03	21.6	5.57	6.36	3.22	1.63	2.37	0.755
20	0.04456	1.91	0.375	1.34	0.158	0.868	0.056	3½ in		12.03	37.8	7.43	10.9	4.29	2.78	3.16	1.28
25	0.05570	2.39	0.561	1.68	0.234	1.09	0.083	0.812	0.041	4 in		9.28	16.7	5.37	4.22	3.94	1.93
30	0.06684	2.87	0.786	2.01	0.327	1.30	0.114	0.974	0.056			11.14	23.8	6.44	5.92	4.73	2.72
35	0.07798	3.35	1.05	2.35	0.436	1.52	0.151	1.14	0.704	0.882	0.041	12.99	32.2	7.51	7.90	5.52	3.64
40	0.08912	3.83	1.35	2.68	0.556	1.74	0.192	1.30	0.095	1.01	0.052	14.85	41.5	8.59	10.24	6.30	4.65
45	0.1003	4.30	1.67	3.02	0.668	1.95	0.239	1.46	0.117	1.13	0.064			9.67	12.80	7.09	5.85
50	0.1114	4.78	2.03	3.35	0.839	2.17	0.288	1.62	0.142	1.26	0.076	5 in		10.74	15.66	7.88	7.15
60	0.1337	5.74	2.87	4.02	1.18	2.60	0.406	1.95	0.204	1.51	0.107			12.89	22.2	9.47	10.21
70	0.1560	6.70	3.84	4.69	1.59	3.04	0.540	2.27	0.261	1.76	0.143	1.12	0.047			11.05	13.71
80	0.1782	7.65	4.97	5.36	2.03	3.47	0.687	2.60	0.334	2.02	0.180	1.28	0.060			12.62	17.59
90	0.2005	8.60	6.20	6.03	2.53	3.91	0.861	2.92	0.416	2.27	0.224	1.44	0.074	6 in		14.20	22.0
100	0.2228	9.56	7.59	6.70	3.09	4.34	1.05	3.25	0.509	2.52	0.272	1.60	0.090	1.11	0.036	15.78	26.9
125	0.2785	11.97	11.76	8.38	4.71	5.43	1.61	4.06	0.769	3.15	0.415	2.01	0.135	1.39	0.055	19.72	41.4
150	0.3342	14.36	16.70	10.05	6.69	6.51	2.24	4.87	1.08	3.78	0.580	2.41	0.190	1.67	0.077		
175	0.3899	16.75	22.3	11.73	8.97	7.60	3.00	5.68	1.44	4.41	0.774	2.81	0.253	1.94	0.102		
200	0.4456	19.14	28.8	13.42	11.68	8.68	3.87	6.49	1.85	5.04	0.985	3.21	0.323	2.22	0.130	8 in	
225	0.5013	. . .	. . .	15.09	14.63	9.77	4.83	7.30	2.32	5.67	1.23	3.61	0.401	2.50	0.162	1.44	0.043
250	0.557	. . .	. . .	. . .	. . .	10.85	5.93	8.12	2.84	6.30	1.46	4.01	0.495	2.78	0.195	1.60	0.051
275	0.6127	. . .	. . .	. . .	. . .	11.94	7.14	8.93	3.40	6.93	1.79	4.41	0.583	3.05	0.234	1.76	0.061
300	0.6684	. . .	. . .	. . .	. . .	13.00	8.36	9.74	4.02	7.56	2.11	4.81	0.683	3.33	0.275	1.92	0.072
325	0.7241	. . .	. . .	. . .	. . .	14.12	9.89	10.53	4.09	8.19	2.47	5.21	0.797	3.61	0.320	2.08	0.083
350	0.7798			. . .	. . .	. . .	. . .	11.36	5.41	8.82	2.84	5.62	0.919	3.89	0.367	2.24	0.095
375	0.8355			. . .	. . .	. . .	. . .	12.17	6.18	9.45	3.25	6.02	1.05	4.16	0.416	2.40	0.108
400	0.8912			. . .	. . .	. . .	. . .	12.98	7.03	10.08	3.68	6.42	1.19	4.44	0.471	2.56	0.121

TABLE B8.8 Flow of Water Through Schedule 40 Steel Pipe (*Continued*)

Discharge		Pressure drop per 100 ft and velocity in Schedule 40 pipe for water at 60°F															
gal/min	ft^3/s	Velocity, ft/s	Press. drop, lb/in^2	Velocity, ft/s	Press. drop, lb/in^2	Velocity, ft/s	Press. drop, lb/in^2	Velocity, ft/s	Press. drop, lb/in^2	Velocity, ft/s	Press. drop, lb/in^2	Velocity, ft/s	Press. drop, lb/in^2	Velocity, ft/s	Press. drop, lb/in^2	Velocity, ft/s	Press. drop, lb/in^2
425	0.9469			...	...	...	...	13.80	7.89	10.71	4.12	6.82	1.33	4.72	0.529	2.73	0.136
450	1.003	10 in		...	...	...	...	14.61	8.80	11.34	4.60	7.22	1.48	5.00	0.590	2.89	0.151
475	1.059	1.93	0.054			...	...	...	...	11.97	5.12	7.62	1.64	5.27	0.653	3.04	0.166
500	1.114	2.03	0.059			...	...	...	...	12.60	5.65	8.02	1.81	5.55	0.720	3.21	0.182
550	1.225	2.24	0.071			...	...	...	...	13.85	6.79	8.82	2.17	6.11	0.861	3.53	0.219
600	1.337	2.44	0.083			...	...	...	...	15.12	8.04	9.63	2.55	6.66	1.02	3.85	0.258
650	1.448	2.64	0.097	12 in		...	...	...	...	...	...	10.43	2.98	7.22	1.18	4.17	0.301
700	1.560	2.85	0.112	2.01	0.047			...	...	...	...	11.23	3.43	7.78	1.35	4.49	0.343
750	1.671	3.05	0.127	2.15	0.054	14 in		...	...	...	...	12.03	3.92	8.33	1.55	4.81	0.392
800	1.782	3.25	0.143	2.29	0.061			...	...	...	...	12.83	4.43	8.88	1.75	5.13	0.443
850	1.894	3.46	0.160	2.44	0.068	2.02	0.042	...	...	...	...	13.64	5.00	9.44	1.96	5.45	0.497
900	2.005	3.66	0.179	2.58	0.075	2.13	0.047	...	...	...	...	14.44	5.58	9.99	2.18	5.77	0.554
950	2.117	3.86	0.198	2.72	0.083	2.25	0.052			...	...	15.24	6.21	10.55	2.42	6.09	0.613
1000	2.228	4.07	0.218	2.87	0.091	2.37	0.057	16 in		...	...	16.04	6.84	11.10	2.68	6.41	0.675
1100	2.451	4.48	0.260	3.15	0.110	2.61	0.068			...	...	17.65	8.23	12.22	3.22	7.05	0.807
1200	2.674	4.88	0.306	3.44	0.128	2.85	0.080	2.18	0.042	...	...	...	...	13.33	3.81	7.70	0.948
1300	2.896	5.29	0.355	3.73	0.150	3.08	0.093	2.36	0.048	...	...	...	...	14.43	4.45	8.33	1.11
1400	3.119	5.70	0.409	4.01	0.171	3.32	0.107	2.54	0.055					15.55	5.13	8.98	1.28
1500	3.342	6.10	0.466	4.30	0.195	3.56	0.122	2.72	0.063	18 in				16.66	5.85	9.62	1.46
1600	3.565	6.51	0.527	4.59	0.219	3.79	0.138	2.90	0.071					17.77	6.61	10.26	1.65
1800	4.010	7.32	0.663	5.16	0.276	4.27	0.172	3.27	0.088	2.58	0.050			19.99	8.37	11.54	2.08
2000	4.456	8.14	0.808	5.73	0.339	4.74	0.209	3.63	0.107	2.87	0.060	20 in		22.21	10.3	12.82	2.55
2500	5.570	10.17	1.24	7.17	0.515	5.93	0.321	4.54	0.163	3.59	0.091					16.03	3.94
3000	6.684	12.20	1.76	8.60	0.731	7.11	0.451	5.45	0.232	4.30	0.129	3.46	0.075	24 in		19.24	5.59
3500	7.798	14.24	2.38	10.03	0.982	8.30	0.607	6.35	0.312	5.02	0.173	4.04	0.101			22.44	7.56
4000	8.912	16.27	3.08	11.47	1.27	9.48	0.787	7.26	0.401	5.74	0.222	4.62	0.129	3.19	0.052	25.65	9.80
4500	10.03	18.31	3.87	12.90	1.60	10.67	0.990	8.17	0.503	6.46	0.280	5.20	0.162	3.59	0.065	28.87	12.2
5000	11.14	20.35	4.71	14.33	1.95	11.85	1.21	9.08	0.617	7.17	0.340	5.77	0.199	3.99	0.079	...	
6000	13.37	24.41	6.74	17.20	2.77	14.23	1.71	10.89	0.877	8.61	0.483	6.93	0.280	4.79	0.111	...	
7000	15.60	28.49	9.11	20.07	3.74	16.60	2.31	12.71	1.18	10.04	0.652	8.08	0.376	5.59	0.150	...	
8000	17.82	...	...	22.93	4.84	18.96	2.99	14.52	1.51	11.47	0.839	9.23	0.488	6.38	0.192	...	
9000	20.05	...	...	25.79	6.09	21.34	3.76	16.34	1.90	12.91	1.05	10.39	0.608	7.18	0.242	...	
10000	22.28	...	...	28.66	7.46	23.71	4.61	18.15	2.34	14.34	1.28	11.54	0.739	7.98	0.294	...	
12000	26.74	...	...	34.40	10.7	28.45	6.59	21.79	3.33	17.21	1.83	13.85	1.06	9.58	0.416	...	
14000	31.19	...	...	...	...	33.19	8.89	25.42	4.49	20.08	2.45	16.16	1.43	11.17	0.562	...	
16000	35.65	...	...	...	...	...	...	29.05	5.83	22.95	3.18	18.47	1.85	12.77	0.723	...	
18000	40.10	...	...	...	...	...	...	32.68	7.31	25.82	4.03	20.77	2.32	14.16	0.907	...	
20000	44.56	...	...	...	...	...	...	36.31	9.03	28.69	4.93	23.08	2.86	15.96	1.12	...	

Useful conversion of units:

1 inch = 25.4 mm; 1 ft = 0.3048 m; 1 ft^3 = 0.02832 m^3; $t_C = \frac{5}{9}(t_F - 32)$; for pressure conversions to other units see Table B8.1.

Note: For calculations for pipes other than Schedule 40, see explanation in Table B8.14.

Note: For pipe lengths other than 100 ft, the pressure drop is proportional to the length. Thus, for 50 ft of pipe, the pressure drop is approximately one-half the value given in the table . . . for 300 ft, three times the given value, etc. Velocity is a function of the cross-sectional flow area; thus, it is constant for a given flow rate and is independent of pipe length.

Source: Ref. 7.

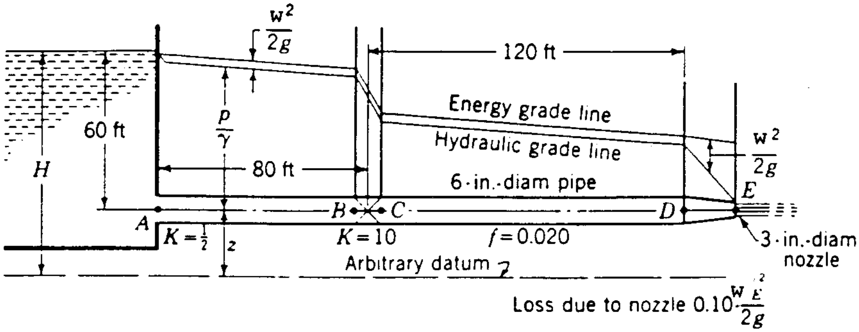
$\frac{w^2}{2g}$
120 ft
Energy grade line
Hydraulic grade line
6-in.-diam pipe
60 ft
H
$\frac{p}{\gamma}$
80 ft
A
B
C
D
E
$\frac{w^2}{2g}$
$K=\frac{1}{2}$
z
K=10
f=0.020
Arbitrary datum
3-in.-diam nozzle
Loss due to nozzle $0.10\frac{w_E^2}{2g}$

FIGURE B8.6 Hydraulic and energy grade lines. (*From Ref. 1.*)

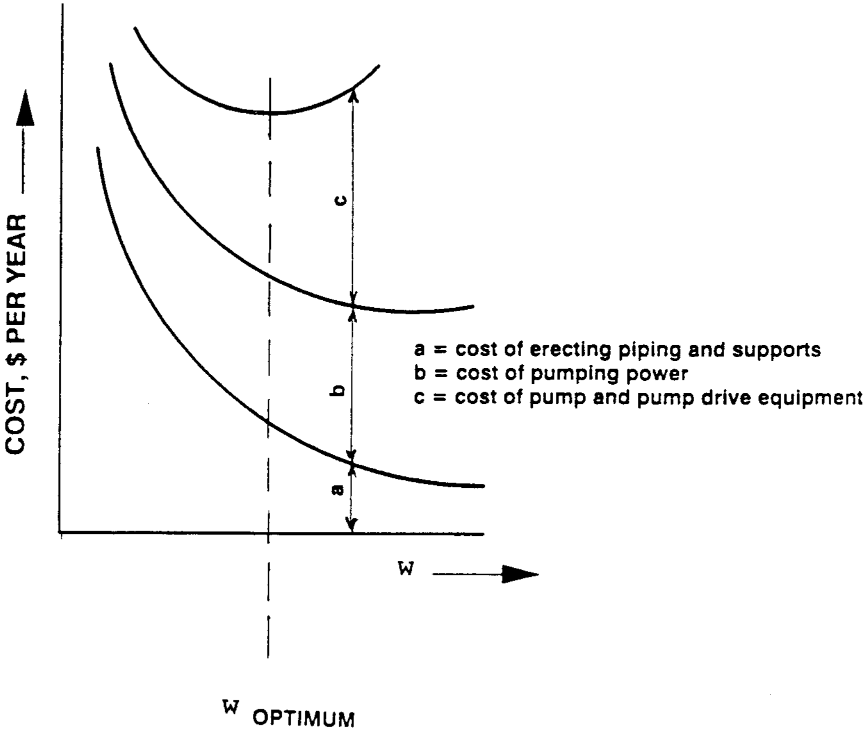

FIGURE B8.7 Flow velocity optimization plot.

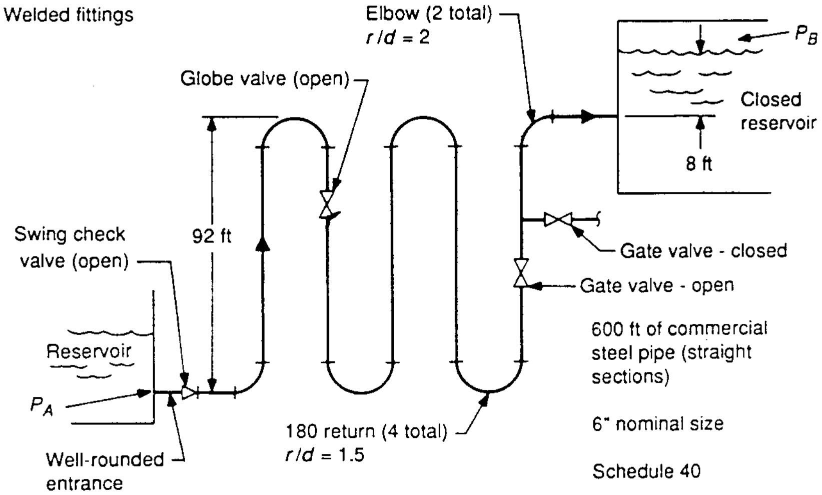
Welded fittings
Elbow (2 total)
$r/d = 2$
P_B
Globe valve (open)
Closed reservoir
8 ft
92 ft
Swing check valve (open)
Gate valve - closed
Gate valve - open
600 ft of commercial steel pipe (straight sections)
Reservoir
P_A
6" nominal size
180 return (4 total)
$r/d = 1.5$
Well-rounded entrance
Schedule 40

FIGURE B8.8 Reference for sample problem B8.1.

TABLE B8.9 Computer Printout of Steam/Water Properties

```
                    STEAM PROPERTIES                INPUT       *     RESULTS
                    ======================        ==========        ===========
                    ABS. PRESSURE,    bar              .0000            34.4738
                                     psia           500.0000           500.0000
                    --------------------        -----------   *   -----------
                    TEMPERATURE,        C              .0000            93.3333
                                        F           200.0000           200.0000
                    --------------------        -----------   *   -----------
                    ENTHALPY,       kJ/kg              .0000           393.5460
                                  Btu/lbm              .0000           169.1943
                    --------------------        -----------   *   -----------
                    ENTROPY,    kJ/(kg.K)            .000000           1.228453
                              Btu/(lbm.R)            .000000            .293411
                    --------------------        -----------   *   -----------
                    SPEC.VOLUME     m3/kg            .000000            .001037
                                  ft3/lbm            .000000            .016609
                    --------------------        -----------   *   -----------
                    QUALITY,      decimal            .000000          -1.000000
                    --------------------        -----------   *   -----------
                    DYNAM. VISC    N.s/m2        .000000000        .000303681
                                 lbf.s/ft2       .000000000        .000006343
                    --------------------        -----------   *   -----------
UNITS FOR INPUT: UNT = 1-SI, 2-BRITISH         *  1995/TJS
UNT   PRESSURE  TEMPERAT  ENTHALPY    ENTROPY      QUALITY
```

Then:

$$w = \frac{125.06}{0.200} 0.01661 = 10.39 \text{ ft/s}$$

Using Eq. (B8.16), the Reynolds number is

$$\mathrm{Re} = \frac{Dw}{\nu} = \frac{(0.5054)\,(10.39)}{3.39 * 10^{-6}} = 1.549 * 10^{6}$$

D'Arcy-Weisbach Friction Factor. For commercial steel pipe from Ref. 7, the relative roughness is

$$\frac{\varepsilon}{D} = 0.00015/0.5054 = 0.0003$$

and the friction factor in zone of complete turbulence is

$$f_T = 0.015$$

From Eq. (B8.17), using, for example, the Newton-Raphson method for solving equations [or using the Moody diagram, Fig. (B8.5)], for calculated values of Re and ε/D, the D'Arcy-Weisbach friction factor, f, is found:

$$f = 0.0154$$

Flow Resistance Coefficients[7]:

Local disturbance	$K(f_T = 0.015)$
Entrance	$K = 0.04$
4 180° turns	$(4)(22.18\ \mathrm{f}_T) = 1.33$
1 globe valve (open)	$340\ f_T = 5.10$
1 tee flow through run	$20\ f_T = 0.33$
1 swing check valve (open)	$100\ f_T = 1.50$
2 long radius elbows	$(2)(14 f_T) = 0.42$
1 gate valve (open)	$8\ f_T = 0.12$
Exit	$K = 1.00$
	$\sum K = 9.77$

Total Resistance

$$\begin{aligned} K_{\mathrm{tot}} &= \sum K + f\,\frac{L}{D} \\ &= 9.77 + 0.0154\,\frac{600}{0.5054} \\ &= 28.05 \end{aligned}$$

"Friction" Pressure Drop in Pipe. From Eqs. (B8.14) and (B8.18):

$$\begin{aligned}\Delta p &= K_{\text{tot}}\,\rho\,\frac{w^2}{2g_c}\\ &= 28.05\,\frac{(10.39)^2}{(0.01661)(2)(32.174)}\\ &= 2833.08\,\frac{\text{lb}_\text{f}}{\text{ft}^2}\\ &= \frac{2833.08}{144} = 19.67\text{ psi}\end{aligned}$$

Pressure Difference $p_A - p_B$. From Bernoulli's equation (Eq. B8.12 with $H_f = 0$ and $H_p = 0$):

$$\begin{aligned}&\frac{\rho_A w_A^2}{2g_c} + p_A + \frac{g}{g_c} z_A \rho_A\\ &= \frac{\rho_B w_B^2}{2g_c} + p_B + \frac{g}{g_c} z_B \rho_B + \Delta p\end{aligned}$$

$$\text{Assuming } \rho_A = \rho_B = \rho \quad \text{and} \quad g = 32.174\,\frac{\text{ft}}{\text{s}^2}$$

$$\begin{aligned}p_A - p_B &= \frac{g}{g_c}(z_B - z_A)\,\frac{\rho}{144} + \Delta p\\ &= \frac{100}{(144)(0.01661)} + 19.67 = 61.48\text{ psi (4.24 bar)}\end{aligned}$$

Applications: Oil and Other Liquid Systems

The calculation of oil flow through pipes is a much more complicated process than a similar calculation for water flow. Water properties are well-defined and many, including viscosity, are nearly constant within liquid temperature ranges, whereas oil is quite different. No two oils have the same physical properties, and any given oil is subject to important physical changes at expected variable temperatures. When considering oil flow in pipes, the most important variable physical property is viscosity.

Ordinary crude oil is not a homogeneous liquid; it is a very complex fluid composed of compounds of carbon and hydrogen which exist in petroleum in a wide variety of combinations. Physical properties change accordingly, and they also change as a result of temperature variations. Therefore, this handbook assumes that the user will research the fluid of interest in other sourcebooks (such as the *Petroleum Processing Handbook*[9]) to determine important properties including density and viscosity.

The "Viscosity" subsection in this handbook refers to Tables B8.5 and B8.6 for conversion among several common units of viscosity. The special names and symbols for derived CGS units (such as dyne, erg, poise, and stokes) should not be used

TABLE B8.10 Kinematic Viscosity Conversion Table (Centistokes to Engler, Saybolt, and Redwood units)

Centistokes	Engler degrees	Saybolt seconds at 130°F	Redwood seconds at 140°F	Centistokes	Engler degrees	Saybolt seconds at 130°F	Redwood seconds at 140°F	Centistokes	Engler degrees	Saybolt seconds at 130°F	Redwood seconds at 140°F
2.0	1.140	32.66	30.95	18.0	2.644	89.37	78.45	41.0	5.465	190.6	168.3
2.5	1.182	34.46	32.20	19.0	2.755	93.48	82.10	42.0	5.590	195.1	172.3
3.0	1.224	36.07	33.45	20.0	2.870	97.69	85.75	43.0	5.720	199.6	176.4
3.5	1.266	37.67	34.70	21.0	2.984	101.9	89.50	44.0	5.845	204.2	180.4
4.0	1.308	39.17	35.95	22.0	3.100	106.2	93.25	45.0	5.975	208.8	184.5
4.5	1.350	40.78	37.20	23.0	3.215	110.5	97.05	46.0	6.105	213.4	188.5
5.0	1.400	42.38	38.45	24.0	3.335	114.8	100.9	47.0	6.235	218.0	192.6
5.5	1.441	43.98	39.80	25.0	3.455	119.1	104.7	48.0	6.365	222.6	196.6
6.0	1.481	45.59	41.05	26.0	3.575	123.5	108.6	49.0	6.495	227.2	200.7
6.5	1.521	47.19	42.40	27.0	3.695	127.9	112.5	50.0	6.630	231.8	204.7
7.0	1.563	48.79	43.70	28.0	3.820	132.4	116.5	52.0	6.890	241.1	212.8
7.5	1.605	50.44	45.00	29.0	3.945	136.8	120.4	54.0	7.106	250.3	221.0
8.0	1.653	52.10	46.35	30.0	4.070	141.2	124.4	56.0	7.370	259.5	229.1
8.5	1.700	53.80	47.75	31.0	4.195	145.6	128.3	58.0	7.633	268.7	237.2
9.0	1.746	55.51	49.10	32.0	4.320	150.0	132.3	60.0	7.896	277.9	245.3
9.5	1.791	57.21	50.55	33.0	4.445	154.5	136.3	62.0	8.159	287.2	253.5
10.0	1.837	58.91	52.00	34.0	4.570	159.0	140.2	64.0	8.422	296.4	261.6
11.0	1.928	62.42	55.00	35.0	4.695	163.5	144.2	66.0	8.686	305.6	269.8
12.0	2.020	66.03	58.10	36.0	4.825	168.0	148.2	68.0	8.949	314.8	277.9
13.0	2.120	69.73	61.30	37.0	4.955	172.5	152.2	70.0	9.212	324.0	286.0
14.0	2.219	73.54	64.55	38.0	5.080	177.0	156.2	72.0	9.475	333.3	294.1
15.0	2.323	77.35	67.95	39.0	5.205	181.5	160.3	74.0	9.738	342.5	302.2
16.0	2.434	81.25	71.40	40.0	5.335	186.0	164.3	75.0	9.870	347.2	306.3
17.0	2.540	85.26	74.85								

Supplementary Kinematic Viscosity Conversion Table

Centistokes........................	2	6	10	20	30	40	50	60	70
Saybolt at 100°F...............	32.60	45.50	58.80	97.50	40.9	185.7	231.4	277.4	323.4
Saybolt at 210°F...............	32.83	45.82	59.21	98.18	141.9	187.0	233.0	279.3	325.7
Redwood at 70°F.............	30.20	40.50	51.70	85.40	123.7	163.2	203.3	243.5	283.9
Redwood at 200°F...........	31.20	41.50	52.55	86.90	126.0	166.7	208.3	250.0	291.7

Temperature conversion: $t_C = \frac{5}{9}\,(t_F - 32)$

70°F = 21.1°C; 140°F = 60.0°C
100°F = 37.8°C; 200°F = 93.3°C
130°F = 54.5°C; 210°F = 98.9°C

TABLE B8.11 Flow of Oils Through Commercial Pipes

Size of pipe and average inside diameter, inches	Capacity, gallons per minute*	Pressure drop in pounds per square inch per 100 ft of pipe based on oils of 20° Bé gravity					
		Viscosity in Saybolt Universal seconds					
		100	200	300	400	500	600
½ 0.622	2	6.59	14.3	21.7	29.1	36.9	43.6
	5	21.1	34.8	53.4	71.5	89.5	107.0
	7	37.7	49.2	74.6	101.0	129.0	152.0
	10	69.8	85.8	107.0	144.0	177.0	217.0
	15	143.0	174.0	194.0	217.0	267.0	325.0
¾ 0.824	2	2.16	4.74	7.04	9.48	11.6	14.2
	5	5.6	11.5	17.1	23.1	28.9	35.2
	7	9.96	16.1	24.5	32.8	40.5	48.9
	10	18.4	22.3	34.9	46.0	58.5	70.9
	15	37.9	45.7	51.5	70.4	88.3	106.0
1 1.05	5	2.06	4.32	6.68	8.85	11.0	13.4
	10	5.9	8.74	13.4	17.9	22.0	26.6
	15	11.9	14.5	19.7	26.6	33.2	40.3
	20	19.7	23.8	26.8	35.4	44.1	53.5
	25	29.0	35.1	39.3	44.2	54.5	66.8
1½ 1.61	10	0.783	1.57	2.40	3.22	3.98	4.86
	20	2.61	3.17	4.85	6.52	8.02	9.70
	30	5.30	6.43	7.15	9.68	12.1	14.7
	40	8.72	10.6	11.9	12.8	16.0	19.4
	50	12.7	15.7	17.4	18.8	19.8	24.2
2 2.067	10	0.266	0.578	0.875	1.17	1.47	1.79
	20	0.79	1.15	1.75	2.34	2.92	3.52
	30	1.60	1.93	2.62	3.50	4.40	5.30
	40	2.63	3.18	3.56	4.66	5.85	7.10
	50	3.86	4.68	5.28	5.88	7.26	8.85
4 4.026	50	0.174	0.198	0.307	0.412	0.494	0.612
	100	0.550	0.668	0.744	0.810	1.01	1.22
	150	1.09	1.36	1.50	1.62	1.74	1.84
	200	1.81	2.22	2.49	2.68	2.85	2.98
	250	2.67	3.26	3.67	3.97	4.20	4.41
6 6.065	100	0.0788	0.0956	0.115	0.158	0.194	0.236
	200	0.259	0.315	0.359	0.388	0.408	0.480
	500	1.27	1.55	1.74	1.88	2.01	2.20
	700	2.29	2.80	3.15	3.36	3.60	3.78
	1000	4.24	5.21	5.82	6.32	6.68	7.05
8 8.03	200	0.0696	0.0834	0.0947	0.102	0.128	0.155
	500	0.340	0.418	0.459	0.500	0.530	0.556
	1000	1.13	1.37	1.55	1.67	1.78	1.87
	1500	2.27	2.74	3.07	3.30	3.59	3.75
	2000	3.88	4.55	5.15	5.56	5.92	6.22
12 12.05	1000	0.165	0.203	0.228	0.242	0.258	0.272
	2000	0.552	0.670	0.750	0.810	0.866	0.905
	3000	1.15	1.34	1.50	1.63	1.73	1.83
	4000	1.91	2.22	2.50	2.69	2.84	3.00
	5000	2.90	3.34	3.63	3.97	4.22	4.41

* To change capacities from gallons per minute to barrels (42 gal) per hour, multiply pressure drops by 1.43. To change from pressure drops per square inch per 100 ft to pressure drops per square inch per mile, multiply by 52.8.

Other important conversion relations:

1 US gallon = 0.00378541 m^3, 1 ft = 0.3048 m,
1 inch = 25.4 mm, 1 mile = 1609.344 m.
For pressure conversions refer to TABLE B8.1.

with the SI. Apart from these, other units which do not belong to any coherent system should be defined in the oil-related problems. For readers who must use information from various existing sources, Table B8.10 is included. Together with Tables B8.5 and B8.6, this may lead to organized, easy-to-follow SI solutions to the encountered problems, especially in determining the pressure drop or flow rate of oil through pipes.

Typical pressure drops for oil flowing through pipes ranging from ½ to 12 inches in diameter appear in Table B8.11 for fluids with a density of approximately 7.78 $\mathrm{lb_m}$/U.S. gal (0.932 kg/$\mathrm{dm^3}$).

Figures B8.9 through B8.15 provide pressure drops versus flow rates for fluids ranging from gasoline to those with 10,000 Seconds Saybolt Universal (SSU) viscosity through 2- to 12-in Schedule 40 pipe. To use these figures with SI units, the following conversion factors should be applied: 1 U.S. gallon = 3.78541 $\mathrm{dm^3}$, 1 U.S. mile = 1.609344 km (exactly), 1000 ft = 304.8 m (exactly). For pressure conversions see Table B8.1. The *specific gravity* of a substance is the ratio of its weight to the weight of an equal volume of water at chosen standard conditions.

Usually the engineer of an oil-burning plant will know only two things regarding the fuel oil supplied to him; namely, the specific gravity and the viscosity. The specific density or specific gravity can be used to convert volume measurements of fuel oil into mass, or vice versa. Using the API gravity system devised jointly by the American Petroleum Institute and the National Bureau of Standards (NBS), the API gravity of a mixture can be readily calculated proportionately (in degrees

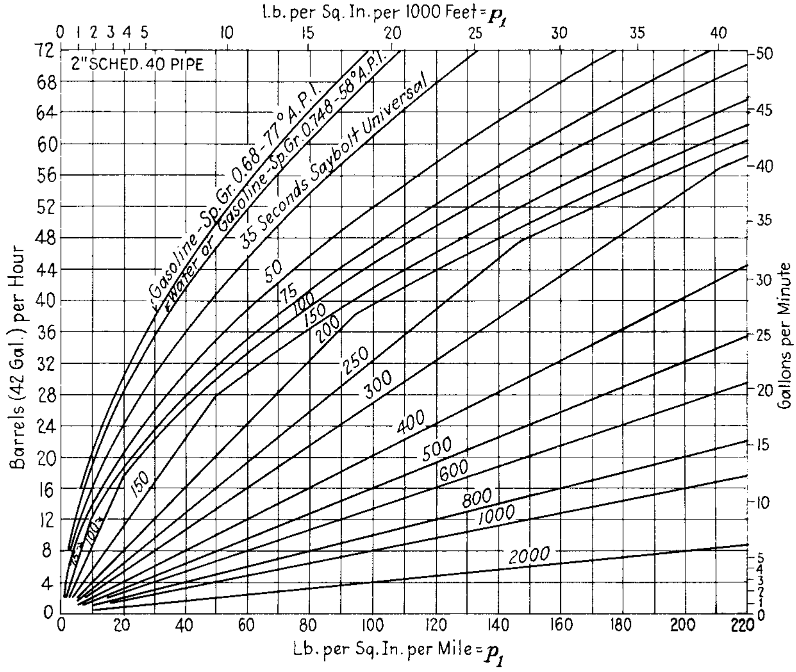

FIGURE B8.9 Pipe friction based on average Saybolt Universal viscosity and specific gravity of fluid in pipeline. Pressure drop $\Delta p = p_1 \times$ sp. gr.

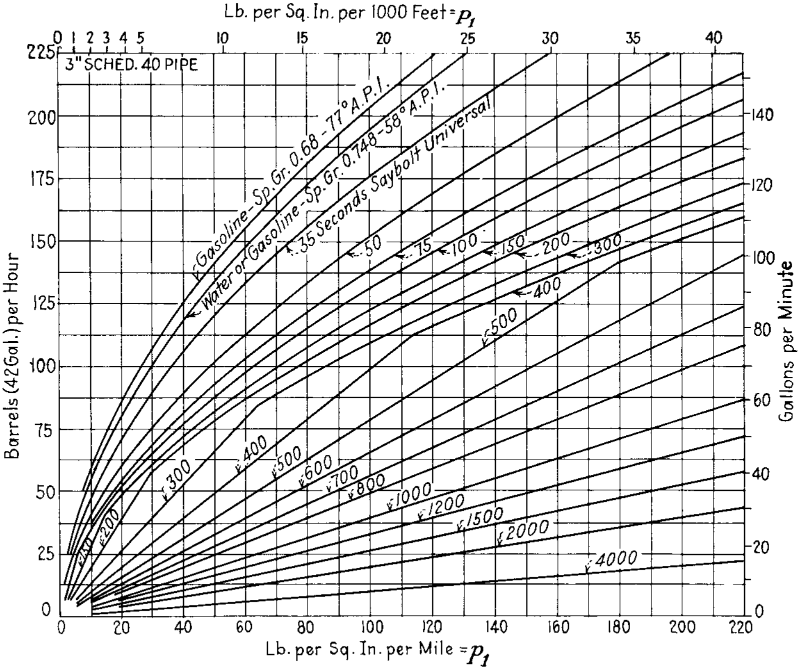

FIGURE B8.10 Pipe friction based on average Saybolt Universal viscosity and specific gravity of fluid in pipeline. Pressure drop $\Delta p = p_1 \times$ sp. gr.

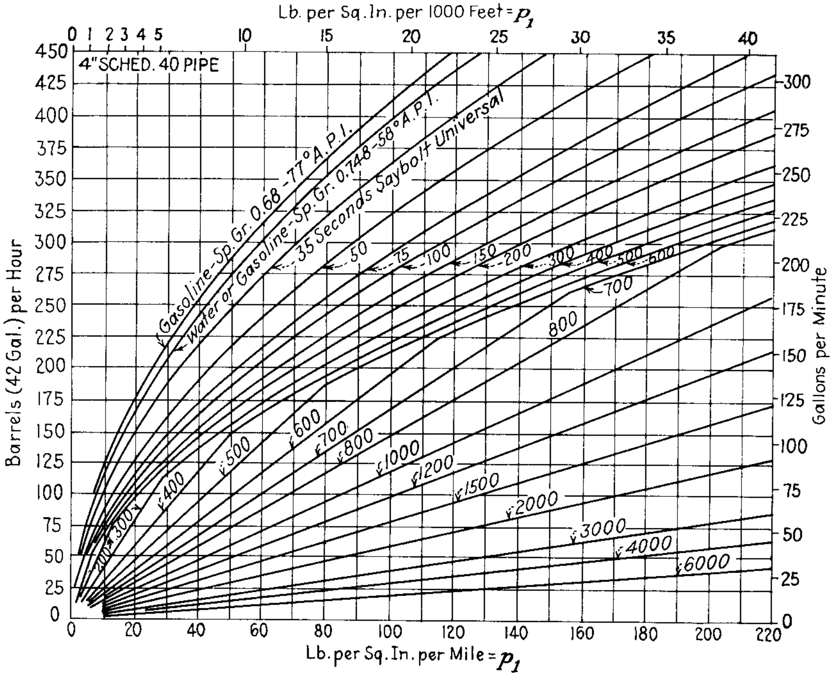

FIGURE B8.11 Pipe friction based on average Saybolt Universal viscosity and specific gravity of fluid in pipeline. Pressure drop $\Delta p = p_1 \times$ sp. gr.

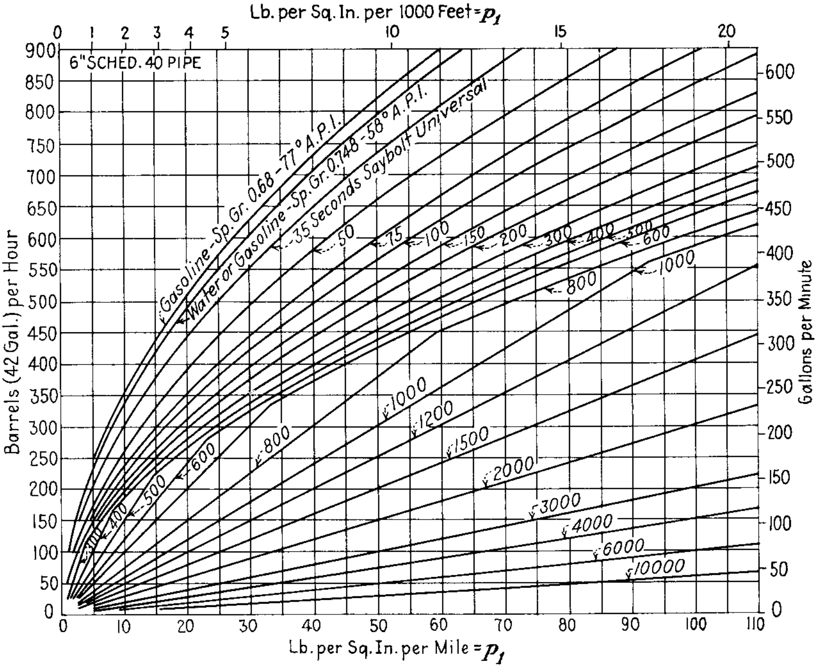

FIGURE B8.12 Pipe friction based on average Saybolt Universal viscosity and specific gravity of fluid in pipeline. Pressure drop $\Delta p = p_1 \times$ sp. gr.

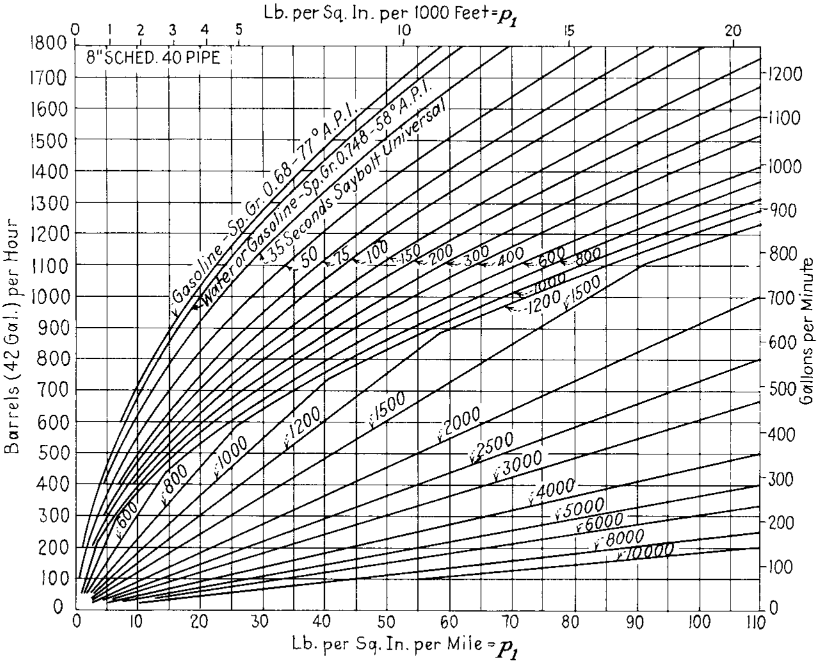

FIGURE B8.13 Pipe friction based on average Saybolt Universal viscosity and specific gravity of fluid in pipeline. Pressure drop $\Delta p = p_1 \times$ sp. gr.

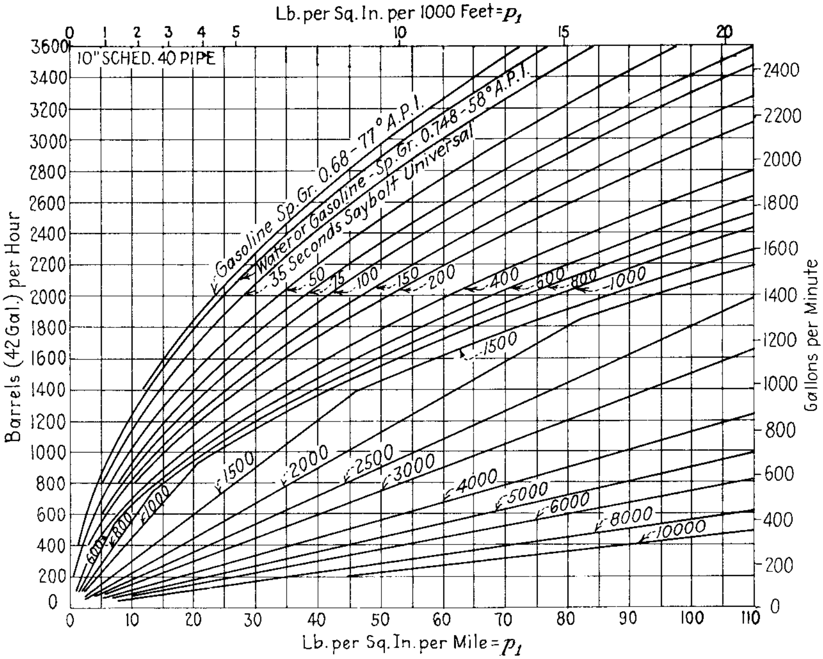

FIGURE B8.14 Pipe friction based on average Saybolt Universal viscosity and specific gravity of fluid in pipeline. Pressure drop $\Delta p = p_1 \times$ sp. gr.

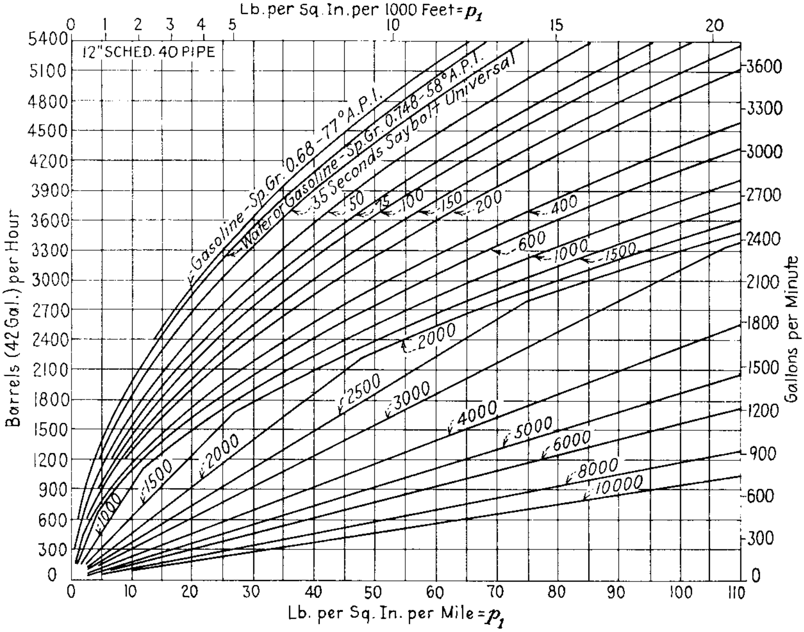

FIGURE B8.15 Pipe friction based on average Saybolt Universal viscosity and specific gravity of fluid in pipeline. Pressure drop $\Delta p = p_1 \times$ sp. gr.

API) from the respective gravities of the components. *Example:* What is the API gravity of a 40 percent mixture of a 10° API fuel and 60 percent of a 15° API fuel? Answer: $0.40 \times 10° + 0.60 \times 15° = 13°$ API.

A knowledge of viscosity and how it varies with temperature is essential for the easy handling and efficient utilization of fuel oil. Heavier fuel oils must be heated to the proper temperature in order to obtain a viscosity of 150 Saybolt Universal at the burners for the most efficient atomization. It is also important to determine to what temperature the oil should be heated in the bunkers so it can be readily pumped through the fuel oil system. Generally the maximum temperature that oil in the bunkers be heated to is 130°F (about 55°C) in an effort to reduce the viscosity for easier pumping.

When two or more oils are blended, it is necessary to determine the properties of the mixture. Several methods are available to achieve the important properties such as viscosity and most use some type of viscosity blending chart. The *Petroleum Processing Hanbook*[9] is one source of such a blending chart which is a semilogarithmic plot of kinematic viscosity versus either volume percent lower or higher viscosity liquid. A linear interpolation is used on this type of plot.

STEADY SINGLE-PHASE COMPRESSIBLE FLOW IN PIPING

Characteristics of Compressible Flow in Pipes

The term *compressible flow* implies variations in density of a fluid. These variations are the result of pressure and temperature changes from one point to another. The rate of change of density with respect to pressure is, therefore, an important parameter in the analysis of compressible flow, and it is closely connected with the velocity of sound.

Adiabatic, Constant-Area Flow with Friction. Adiabatic flow with friction is of interest in sizing safety valve discharge lines (vent lines) and other pipes where heat transfer may be neglected and where the flow may be restricted by sonic condition at the pipe exit (choked flow). Supersonic velocities will not be discussed here.

In this section, the flow of compressible gases and steam (small fluid densities) in ducts of constant cross-sectional area will be discussed. For adiabatic conditions (heat exchanged with surroundings $dQ = 0$), the energy equation for steady flow between two points, 1 and x, in a pipe may be written as follows:

$$h_x + \frac{w_x^2}{2g_c J} = h_1 + \frac{w_1^2}{2g_c J} = h_0 \tag{B8.20}$$

where h_0 is the stagnation enthalpy [see Eq. (B8.9)]. Utilizing the continuity equation:

$$\dot{G} = \frac{\dot{m}}{A} = \frac{w_x}{v_x} = \frac{w_1}{v_1} \tag{B8.21}$$

for constant values of flow rate $\dot{m}$, and area A, the following is found:

$$h_x + \left(\frac{\dot{m}}{A}\right)^2 \frac{v_x^2}{2g_c J} = h_1 + \frac{w_1^2}{2g_c J} = h_0 \tag{B8.22}$$

Equation (B8.22) represents the *Fanno line*[10] which is the locus of the conditions in a cylindrical pipe of constant diameter. Having fixed w_1 and h_1 at the starting point, the stagnation enthalpy h_0 is calculated. This enthalpy stays constant along the length L of the pipe. Choosing an arbitrary specific volume v_x, the corresponding value of h_x can be calculated from Eq. (B8.22). The intersection of v_x and h_x on the $h - s$ diagram represents a point on the Fanno line. The sonic (choked) condition at the pipe exit shown in Fig. B8.16 is defined by

$$\frac{ds}{dh} = 0 \tag{B8.23}$$

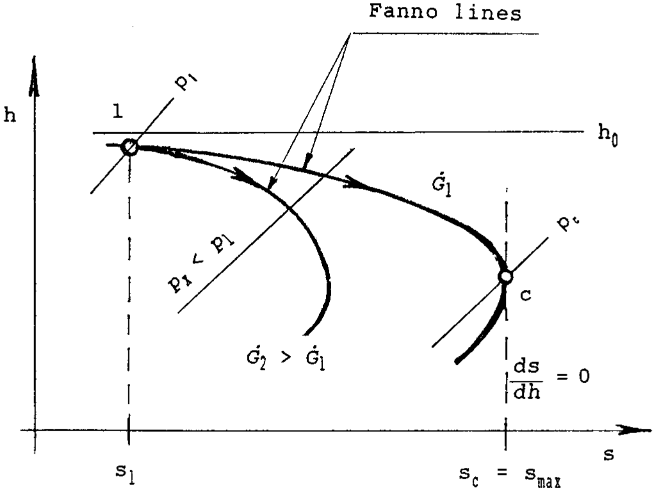

FIGURE B8.16 Fanno line on the *h-s* diagram.

Considering the work done against friction (an irreversible process with the change in entropy of the fluid within the system) and the heat generated within the fluid by internal friction during an adiabatic flow (heat exchanged with the surroundings $dq = 0$), the following expression is derived:

$$L_x = \frac{2g_c J}{f} D \int_{s_l}^{s_x} \frac{T}{w^2} ds \tag{B8.24}$$

Equation (B8.24) represents the length L_x of the pipeline, along which the pressure drops from p_1 to p_x. The described procedure yields a number of points on a Fanno line and also the coordinates of the function $T/w^2 = f(s)$. Integrating the function $T/w^2 = f(s)$ with fixed upper boundary (sonic conditions) and floating lower boundary of integration, the fluid parameters (static conditions) at any dis-

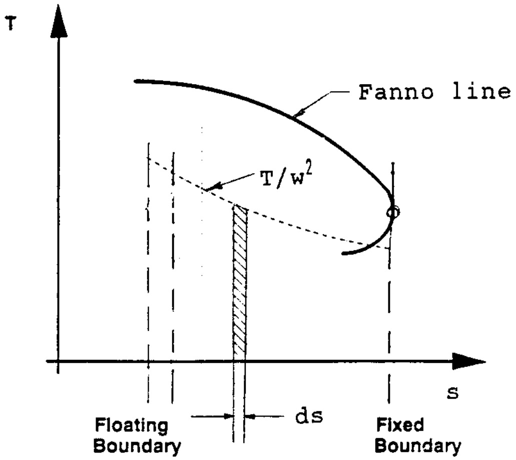

FIGURE B8.17 Integration of the function T/w^2.

tance L upstream of the sonic (choked) plane can be found (convergence on the given length L of the pipe). The procedure is explained in Fig. B8.17.

If the calculated pressure at sonic exit is lower than the receiver pressure, the additional length of the pipe required for choked conditions at the exit should be calculated. By adding this fictitious pipe length to the actual length of the pipe the "extended length" is found. This new length is now used for calculating the parameters at the start of the pipeline, after a valve, or at any distance from the choked exit.

For steam service, computerized calculations utilizing built-in steam tables (as in Ref. 5) are recommended. For most problems in gas dynamics, however, the assumption of the perfect gas law is sufficiently in accord with the properties of real gases to be acceptable.[11]

A simplified approach for frictional, adiabatic, constant-area flow (Fanno line analysis) of a perfect gas (that has constant specific heat) is presented in Ref. 11. The working formulas may be represented graphically or they may be used for computerized calculations to produce Fanno line tables for a perfect gas of any k and any assigned Ma values. As an example, see Table B8.12. It is important to notice that in Table B8.12, taken from Ref. 11, the Fanning friction factor is used (see Eq. B8.14 and lines below). Following are some of the working formulas suitable for practical computations, as presented in this reference book. The quantities marked with an asterisk (*) in written expressions (p^*, w^*, etc.) represent the values of the stream properties at the section in the pipe where $\text{Ma} = w/c = 1$ (sonic plane). Because the quantities marked with an asterisk are constants for a given adiabatic, constant-area flow, they may be regarded as convenient reference values for normalizing the equations.

Choke pressure:

$$p^* = \frac{\dot{m}}{A}\sqrt{\frac{2RT_0}{g_c k(k+1)}} \tag{B8.25}$$

TABLE B8.12 Frictional, Adiabatic, Constant-Area Flow (Fanno Line) for Perfect Gas, $k = 1.4$

Ma	T/T^*	p/p^*	p_0/p_0^*	w/w* and ρ^*/ρ	F/F^*	$4fL_{\max}/D$
0.00	1.2000	∞	∞	0.00000	∞	∞
.05	1.1994	21.903	11.5914	.05476	9.1584	280.02
.10	1.1976	10.9435	5.8218	.10943	4.6236	66.922
.15	1.1946	7.2866	3.9103	.16395	3.1317	27.932
.20	1.1905	5.4555	2.9635	.21822	2.4004	14.533
.25	1.1852	4.3546	2.4027	.27217	1.9732	8.4834
.30	1.1788	3.6190	2.0351	.32572	1.6979	5.2992
.35	1.1713	3.0922	1.7780	.37880	1.5094	3.4525
.40	1.1628	2.6958	1.5901	.43133	1.3749	2.3085
.45	1.1533	2.3865	1.4486	.48326	1.2763	1.5664
.50	1.1429	2.1381	1.3399	.53453	1.2027	1.06908
.55	1.1315	1.9341	1.2549	.58506	1.1472	.72805
.60	1.1194	1.7634	1.1882	.63481	1.10504	.49081
.65	1.10650	1.6183	1.1356	.68374	1.07314	.32460
.70	1.09290	1.4934	1.09436	.73179	1.04915	.20814
.75	1.07856	1.3848	1.06242	.77893	1.03137	.12728
.80	1.06383	1.2892	1.03823	.82514	1.01853	.07229
.85	1.04849	1.2047	1.02067	.87037	1.00966	.03632
.90	1.03270	1.12913	1.00887	.91459	1.00399	.014513
.95	1.01652	1.06129	1.00215	.95782	1.00093	.003280
1.00	1.00000	1.00000	1.00000	1.00000	1.00000	0
1.05	.98320	.94435	1.00203	1.04115	1.00082	.002712
1.10	.96618	.89359	1.00793	1.08124	1.00305	.009933
1.15	.94899	.84710	1.01746	1.1203	1.00646	.02053
1.20	.93168	.80436	1.03044	1.1583	1.01082	.03364
1.25	.91429	.76495	1.04676	1.1952	1.01594	.04858
1.30	.89686	.72848	1.06630	1.2311	1.02169	.06483
1.35	.87944	.69466	1.08904	1.2660	1.02794	.08199
1.40	.86207	.66320	1.1149	1.2999	1.03458	.09974
1.45	.84477	.63387	1.1440	1.3327	1.04153	.11782
1.50	.82759	.60648	1.1762	1.3646	1.04870	.13605
1.55	.81054	.58084	1.2116	1.3955	1.05604	.15427
1.60	.79365	.55679	1.2502	1.4254	1.06348	.17236
1.65	.77695	.53421	1.2922	1.4544	1.07098	.19022
1.70	.76046	.51297	1.3376	1.4825	1.07851	.20780
1.75	.74419	.49295	1.3865	1.5097	1.08603	.22504
1.80	.72816	.47407	1.4390	1.5360	1.09352	.24189
1.85	.71238	.45623	1.4952	1.5614	1.1009	.25832
1.90	.69686	.43936	1.5552	1.5861	1.1083	.27433
1.95	.68162	.42339	1.6193	1.6099	1.1155	.28989
2.00	.66667	.40825	1.6875	1.6330	1.1227	.30499
2.05	.65200	.39389	1.7600	1.6553	1.1297	.31965
2.10	.63762	.38024	1.8369	1.6769	1.1366	.33385
2.15	.62354	.36728	1.9185	1.6977	1.1434	.34760
2.20	.60976	.35494	2.0050	1.7179	1.1500	.36091

Source: Ref. 11

Static pressure, p, in the pipe cross section where the Mach number $\mathrm{Ma} < 1$, may be found from the expression:

$$\frac{p}{p^*} = \frac{1}{\mathrm{Ma}} \sqrt{\frac{k+1}{2\left[1 + (k-1)/2\mathrm{Ma}^2\right]}} \tag{B8.26}$$

Flow velocity:

$$\frac{w}{w^*} = \mathrm{Ma} \sqrt{\frac{k+1}{2\left[1 + (k-1)/2\,\mathrm{Ma}^2\right]}} \tag{B8.27}$$

Maximum duct length:

$$f\frac{L_{\max}}{D} = \frac{1 - \mathrm{Ma}^2}{k\mathrm{Ma}^2} + \frac{k+1}{2k} \ln \frac{(k+1)\mathrm{Ma}^2}{2[1 + (k-1)/2\mathrm{Ma}^2]} \tag{B8.28}$$

Equation (B8.28) gives the maximum value of $(f\,L)/D$ corresponding to any initial Mach number Ma. Notice, that for $\mathrm{Ma} = 1$, the expression (B8.28) results in $(f\,L_{\max})/D = 0$. The length of duct L required for the flow to pass from a given initial Mach number Ma_1 to a given final Mach number Ma_2 may be found from the expression:

$$f\frac{L}{D} = \left[f\frac{L_{\max}}{D}\right]_{\mathrm{Ma}_1} - \left[f\frac{L_{\max}}{D}\right]_{\mathrm{Ma}_2} \tag{B8.29}$$

In order to find the change in some stream property, say the pressure, between the sections where the Mach numbers are Ma_1 and Ma_2 respectively, the following expression is used:

$$\frac{p_2}{p_1} = \frac{(p/p^*)_{\mathrm{Ma}_2}}{(p/p^*)_{\mathrm{Ma}_1}} \tag{B8.30}$$

where $(p/p^*)\mathrm{Ma}_2$ is the value of the right-hand side of Eq. (B8.26) corresponding to Ma_2, and so forth.

Isothermal Flow in Long Pipelines. Isothermal flow with friction is of interest in connection with pipelines for transporting gas over long distances. When the lines are extremely long, there is sufficient area for heat transfer to make flow nonadiabatic and approximately isothermal, especially when the gas temperature is not much different from the temperature of the surroundings. In such cases, the flow may not be treated as incompressible and the D'Arcy-Weisbach equation cannot be used for calculating the pressure drop.

Using the assumptions of constant elevation, no work being done by the fluid, continuity, isothermal flow, and that the friction coefficient does not change with length of the pipe yields the following application equation:

$$\dot{m} = \frac{\pi}{4} \sqrt{\frac{2g_c}{fRT_1}} \sqrt{\frac{D^5}{L} p_{\mathrm{ave}} \Delta p} \tag{B8.31}$$

For the same mass flow rate $\dot{m}$, the pipe diameter D may be decreased by increasing the average pressure p_{ave} in the pipeline and/or permitting a larger pressure drop Δp. One of the applications of Eq. (B8.31) is the economic analysis of long gas line systems requiring intermediate compression stations.

It has to be mentioned here that the Mach number

$$\text{Ma} = \frac{1}{\sqrt{k}} \tag{B8.32}$$

represents a limit for continuous isothermal flow, in the same way that $Ma = 1$ represents a limit for continuous adiabatic flow.[11] The working formula for determining the maximum pipe length beyond which the continuous isothermal flow may not proceed (ideal gas approximation) is given by the following expression:

$$f\frac{L_{\max}}{D} = \frac{1 - k\text{Ma}^2}{k\text{Ma}^2} + \ln(k\text{Ma}^2) \tag{B8.33}$$

where Ma is the Mach number at the pipe inlet. For greater lengths, choking occurs and the mass flow rate decreases.

Sample problems for this subsection are presented under "Applications: Sample Problems B8.2–B8.7."

Applications: Steam Systems

In a case of compressible fluids such as air or steam, when density changes are small the fluid may be considered as incompressible. Therefore, all design rules described in earlier sections are applicable to this case. For steam and gas systems, where the fluid density is small, static head is negligible and may be omitted in pressure drop calculations.

The typical velocities shown in Table B8.13 may be considered for preliminary line sizing, but economic size should be determined as a function of pressure drop, pipe cost, and so forth.

Special attention should be given to turbine main steam lines and to hot and cold reheat piping because pressure drop in those systems affects heat rate and plant performance. Cost of piping must be compared with these effects for most economical piping arrangement. Normally, total pressure drop in reheat piping and

TABLE B8.13 Typical Steam Velocity in Pipelines on Industrial Projects[1]

Steam pressure	Velocity	Pressure drop
50 psig (3.5 bar g) and lower	175 ft/s (~50 m/s)	0.4 psi/100 ft (~0.1 bar/100 m)
Over 50 psig (3.5 bar g) saturated steam	120 ft/s (~35 m/s)	1.0 psi/100 ft (~0.25 bar/100 m)
Over 50 psig (3.5 bar g) superheated steam	175 ft/s (~50 m/s)	1.0 psi/100 ft (~0.25 bar/100 m)

[1] Velocities are based on typical process industry practice.
Source: Stone & Webster.

the boiler reheater should be 7 to 9 percent of high pressure turbine exhaust pressure. It is desirable to use a smaller diameter hot reheat line and a larger diameter cold reheat line, taking a greater pressure drop in the more expensive, alloy, hot reheat line.

Extraction steam piping also affects heat rate and output, and noraly this piping should be sized so that the pressure drop does not exceed about 5 percent of turbine stage pressure for the low pressure and 3 to 4 percent for the higher pressure lines.

Extraction steam lines should be designed for the pressure shown on full-load heat balance diagram at 5 percent overpressure and valves wide open (VWO).

Continuously operating steam lines in process projects shall be designed on the basis of reasonable total pressure drop and, except for short leads such as to turbines and pumps, shall not generally exceed the conditions noted in Table B8.13.

Applications: Air and Other Gas Systems

As indicated in the last section, ‘‘Applications: Steam Systems,’’ in a case of compressible fluids such as air or steam when density changes are small, the fluid may be considered as incompressible. Therefore, all design rules described in the subsections ‘‘Characteristics of Incompressible Flow,’’ ‘‘Applications: Water Systems,’’ and ‘‘Applications: Steam Systems’’ are applicable to this section. For steam and gas systems, where the fluid density is small, static head is negligible and may be omitted in pressure drop calculations.

Table B8.14 (from Ref. 7) presents pressure drop for some typical values of air flow rates through piping from ⅛ to 12 in diameter.

Applications: Sample Problems B8.2–B8.7

The most frequent application of single-phase compressible flow steam line analysis normally encountered by engineers is the sizing of safety valve vent lines. This analysis can be done either by using a computer program which is based on procedures discussed, or a hand calculation similar to that presented in this section. Users may compare their results with those obtained from an approximate, semi-empirical procedure based on tables in App. 11 of Ref. 12. It is the responsibility of the designer to make sure that the method used yields conservative results.

The primary consideration in these analyses is to ensure that the vent line will pass the required flow without exceeding recommended backpressure limitations on valves with solidly connected vents or without blowing back in the case of open vent stacks.

Problem B8.2. During abnormal operation of a system, 72,000 $\mathrm{lb_m/h}$ (32,659 kg/h) of air must be released from a high-pressure air tank through a 4-in (Schedule 40) commercial steel bypass line (vent line) into the atmosphere. Stagnation conditions in the vessel during this operation are: $p_o = 600$ psig (41.4) bar gauge (kept at a constant level by compressors), $t_F = 120°\mathrm{F}$ (48.9°C). Equivalent length of the vent line is 90 ft (27.43 m). Calculate the pressure p_1 that exists at the valve discharge and make your comments on the vent line size. Air may be treated as a perfect gas. Assume that this is not a typical safety valve and that the valve backpressure should not exceed 50 percent of the valve set pressure. (The safety valve vent line design criteria are well documented in the ASME Boiler and Pressure Vessel Code.)

TABLE B8.14 Flow of Air Through Schedule 40 Steel Pipe

Free air q' m ft^3/min at 60°F and 14.7 psia	Compressed air ft^3/min at 60°F and 100 psig	Pressure drop of air in pounds per square inch per 100 ft of Schedule 40 pipe For air at 100 lb/in^2 gauge pressure and 60°F temperature														
		⅛ in	¼ in	⅜ in	½ in	¾ in	1 in	1¼ in	1½ in	2 in	2½ in	3 in	3½ in	4 in	5 in	6 in
1	0.128	0.361	0.083	0.018												
2	0.256	1.31	0.285	0.064	0.020											
3	0.384	3.06	0.605	0.133	0.042											
4	0.513	4.83	1.04	0.226	0.071											
5	0.641	7.45	1.58	0.343	0.106	0.027										
6	0.769	10.6	2.23	0.408	0.148	0.037										
8	1.025	18.6	3.89	0.848	0.255	0.062	0.019									
10	1.282	28.7	5.96	1.26	0.356	0.094	0.029									
15	1.922	. . .	13.0	2.73	0.834	0.201	0.062									
20	2.563	. . .	22.8	4.76	1.43	0.345	0.102	0.026								
25	3.204	. . .	35.6	7.34	2.21	0.526	0.156	0.039	0.019							
30	3.845	. . .		10.5	3.15	0.748	0.219	0.055	0.026							
35	4.486	. . .		14.2	4.24	1.00	0.293	0.073	0.035							
40	5.126	. . .		18.4	5.49	1.30	0.379	0.095	0.044							
45	5.767	. . .		23.1	6.90	1.62	0.474	0.116	0.055							
50	6.408			28.5	8.49	1.99	0.578	0.149	0.067	0.019						
60	7.690			40.7	12.2	2.85	0.819	0.200	0.094	0.027						
70	8.971			. . .	16.5	3.83	1.10	0.270	0.126	0.036						
80	10.25			. . .	21.4	4.96	1.43	0.350	0.162	0.046	0.019					
90	11.53			. . .	27.0	6.25	1.80	0.437	0.203	0.058	0.023					
100	12.82				33.2	7.69	2.21	0.534	0.247	0.070	0.029					
125	16.02				. . .	11.9	3.39	0.825	0.380	0.107	0.044					
150	19.22				. . .	17.0	4.87	1.17	0.537	0.151	0.062	0.021				
175	22.43				. . .	23.1	6.60	1.58	0.727	0.205	0.083	0.028				
200	25.63				. . .	30.0	8.54	2.05	0.937	0.264	0.107	0.036				
225	28.84					37.9	10.8	2.59	1.19	0.331	0.134	0.045	0.022			
250	32.04					. . .	13.3	3.18	1.45	0.404	0.164	0.055	0.027			
275	35.24					. . .	16.0	3.83	1.75	0.484	0.191	0.066	0.032			
300	38.45					. . .	19.0	4.56	2.07	0.573	0.232	0.078	0.037			
325	41.65					. . .	22.3	5.32	2.42	0.673	0.270	0.090	0.043			
350	44.87					. . .	25.8	6.17	2.80	0.776	0.313	0.104	0.050			
375	48.06					. . .	29.6	7.05	3.20	0.887	0.356	0.119	0.057	0.030		
400	51.26					. . .	33.6	8.02	3.64	1.00	0.402	0.134	0.064	0.034		
425	54.47					. . .	37.9	9.01	4.09	1.13	0.452	0.151	0.072	0.038		
450	57.67					. . .		10.2	4.59	1.26	0.507	0.168	0.081	0.042		
475	60.88						. . .	11.3	5.09	1.40	0.562	0.187	0.089	0.047		
500	64.08						. . .	12.5	5.61	1.55	0.623	0.206	0.099	0.052		
550	70.49						. . .	15.1	6.79	1.87	0.749	0.248	0.118	0.062		
600	76.90						. . .	18.0	8.04	2.21	0.887	0.293	0.139	0.073		
650	83.30						. . .	21.1	9.43	2.60	1.04	0.342	0.163	0.086		
700	89.71							24.3	10.9	3.00	1.19	0.395	0.188	0.099	0.032	
750	96.12							27.9	12.6	3.44	1.36	0.451	0.214	0.113	0.036	
800	102.5							31.8	14.2	3.90	1.55	0.513	0.244	0.127	0.041	
850	108.9							35.9	16.0	4.40	1.74	0.576	0.274	0.144	0.046	
900	115.3							40.2	18.0	4.91	1.95	0.642	0.305	0.160	0.051	

Useful conversion of units:

1 inch = 25.4 mm; 1 ft = 0.3048 m; 1 ft^3 = 0.02832 m^3; $t_C = \frac{5}{9}(t_F = 32)$; for pressure conversions to other units see Table B8.1.

TABLE B8.14 Flow of Air Through Schedule 40 Steel Pipe (*Continued*)

Free air q' m ft^3/min at 60°F and 14.7 psia	Compressed air ft^3/min at 60°F and 100 psig	Pressure drop of air in pounds per square inch per 100 ft of Schedule 40 pipe For air at 100 lb/in^2 gauge pressure and 60°F temperature								
950	121.8	2.18	0.715	0.340	0.178	0.057	0.023	. . .	20.0	5.47
1 000	128.2	2.40	0.788	0.375	0.197	0.063	0.025	. . .	22.1	6.06
1 100	141.0	2.89	0.948	0.451	0.236	0.075	0.030	. . .	26.7	7.29
1 200	153.8	3.44	1.13	0.533	0.279	0.089	0.035	. . .	31.8	8.63
1 300	166.6	4.01	1.32	0.626	0.327	0.103	0.041	. . .	37.3	10.1
1 400	179.4	4.65	1.52	0.718	0.377	0.119	0.047			11.8
1 500	192.2	5.31	1.74	0.824	0.431	0.136	0.054			13.5
1 600	205.1	6.04	1.97	0.932	0.490	0.154	0.061	8 in		15.3
1 800	230.7	7.65	2.50	1.18	0.616	0.193	0.075			19.3
2 000	256.3	9.44	3.06	1.45	0.757	0.237	0.094	0.023		23.9
									10 in	
2 500	320.4	14.7	4.76	2.25	1.17	0.366	0.143	0.035		37.3
3 000	384.5	21.1	6.82	3.20	1.67	0.524	0.204	0.051	0.016	
3 500	448.6	28.8	9.23	4.33	2.26	0.709	0.276	0.068	0.022	
4 000	512.6	37.6	12.1	5.66	2.94	0.919	0.358	0.088	0.028	
4 500	576.7	47.6	15.3	7.16	3.69	1.16	0.450	0.111	0.035	12 in
5 000	640.8	. . .	18.8	8.85	4.56	1.42	0.552	0.136	0.043	0.018
6 000	769.0	. . .	27.1	12.7	6.57	2.03	0.794	0.195	0.061	0.025
7 000	897.1	. . .	36.9	17.2	8.94	2.76	1.07	0.262	0.082	0.034
8 000	1025	. . .		22.5	11.7	3.59	1.39	0.339	0.107	0.044
9 000	1153	. . .		28.5	14.9	4.54	1.76	0.427	0.134	0.055
10 000	1282	. . .		35.2	18.4	5.60	2.16	0.526	0.164	0.067
11 000	1410	. . .			22.2	6.78	2.62	0.633	0.197	0.081
12 000	1538	. . .			26.4	8.07	3.09	0.753	0.234	0.096
13 000	1666	. . .			31.0	9.47	3.63	0.884	0.273	0.112
14 000	1794	. . .			36.0	11.0	4.21	1.02	0.316	0.129
15 000	1922	. . .				12.6	4.84	1.17	0.364	0.148
16 000	2051	. . .				14.3	5.50	1.33	0.411	0.167
18 000	2307	. . .				18.2	6.96	1.68	0.520	0.213
20 000	2563	. . .				22.4	8.60	2.01	0.642	0.260
22 000	2820	. . .				27.1	10.4	2.50	0.771	0.314
24 000	3076	. . .				32.3	12.4	2.97	0.918	0.371
26 000	3332	. . .				37.9	14.5	3.49	1.12	0.435
28 000	3588	. . .					16.9	4.04	1.25	0.505
30 000	3845	. . .					19.3	4.64	1.42	0.520

For lengths of pipe other than 100 ft, the pressure drop is proportional to the length. Thus, for 50 ft of pipe, the pressure drop is approximately one-half the value given in the table . . . for 300 ft, three times the given value, etc.

The pressure drop is also inversely proportional to the absolute pressure and directly proportional to the absolute temperature.

Therefore, to determine the pressure drop for inlet or average pressures other than 100 psi and at temperatures other than 60°F, multiply the values given in the table by the ratio $[(100 + 14.7)/(P + 14.7)]$ $[(460 + t)/520]$ where P is the inlet or average gauge pressure in pounds per square inch, and t is the temperature in degrees Fahrenheit under consideration.

The cubic feet per minute of compressed air at any pressure is inversely proportional to the absolute pressure and directly proportional to the absolute temperature.

To determine the cubic feet per minute of compressed air at any temperature and pressure other than standard conditions, multiply the value of cubic feet per minute of free air by the ratio $[14.7/(14.7 + P)]$ $[(460 + t)/(520)]$.

Calculations for Pipe Other than Schedule 40

To determine the velocity of water, or the pressure drop of water or air, through pipe other than Schedule 40, use the following formulas, $v_a = v_{40}(d_{40}/d_a)^2$, $\Delta P_a = \Delta P_{40}(d_{40}/d_a)^5$, where v = velocity, ft/s; d = internal diameter of pipe, in; ΔP = pressure drop, lb/in^2.

Subscript a refers to the schedule of pipe through which velocity or pressure drop is desired. Subscript 40 refers to the velocity or pressure drop through Schedule 40 pipe.

Source: Ref. 7.

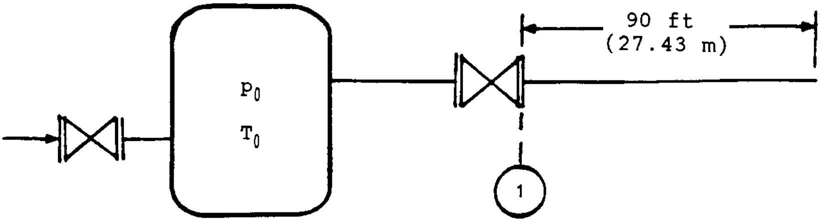

FIGURE B8.18 Reference for sample problem B8. 2.

$$\dot{m} = 72{,}000 \text{ lb/hr} = 20 \text{ lb}_\text{m}/\text{sec}$$

$$T_0 = 120°\text{F} = (460 + 120) = 580°\text{R}$$

$$p_0 = 600 \text{ psig} = 614.7 \text{ psia (assumed atmospheric pressure of 14.7 psia)}$$

Internal pipe diameter $D = 4.026$ in ($A = 0.0884$ ft^2).

Critical pressure at the pipe discharge (see Fig. B8.18) is found by using Eq. (B8.25):

$$p^* = \frac{\dot{m}}{A}\sqrt{\frac{2RT_0}{g_c k(k+1)}} \text{ lb}_\text{f}/\text{ft}^2$$

$$= \frac{20}{0.0884}\sqrt{\frac{(2)\,(53.3)\,(580)}{(32.174)\,(1.4)\,(2.4)}}$$

$$= 5410.35 \text{ lb}_\text{f}/\text{ft}^2 = 37.57 \text{ psia}$$

The line is choked because $p^* > p_{amb} = 14.7$ psia. Pipe $f(L/D)$, from choked exit to the valve discharge, is calculated by assuming complete turbulence of flow. From Ref. 7, for a commercial steel pipe:

$$\frac{\varepsilon}{D} = \frac{(0.00015)\,(12.0)}{4.026} = 0.00045$$

and the friction factor $f = f_T = 0.017$. Then the value of $(f\,L)/D$, counting from the choked pipe exit to the valve outlet is:

$$f\frac{L}{D} = 0.017\frac{(90)\,(12)}{4.026} = 4.5604$$

Using a computerized method (for example the Newton-Raphson method) of solving Eq. (B8.28) (notice that for Ma = 1 at the pipe discharge, the second term on the right hand side of Eq.(B8.28) is zero), with $k = 1.4$, having on the left side of this equation the above calculated $(f\,L)/D = 4.5604$ and changing the Mach number, the value of Mach number for air entering the pipe, which satisfies the equation, is found to be:

$$\text{Ma} = 0.317$$

Substituting this Ma value into Eq. (B8.26) results in

$$\frac{p}{p^*} = \frac{p_1}{p^*} = 3.4193$$

and finally:

$$p_1 = p^* \left(\frac{p}{p^*} \right) = (37.57)(3.4193) = 128.46 \text{ psia (8.86 bar)}$$

Fanno line tables for $k = 1.4$ (Table B8.12) may be used instead, but this procedure would require cumbersome interpolations. Also, note that in Ref. 11 (the source of Table B8.12) the Fanning friction factor is used, which is four times less than that of D'Arcy-Weisbach. This is the reason why Table B8.12 uses $4\, fL_{\max}/D$) value in the last column.

Problem B8.3. Twice as much flow rate must be released from the tank described in Problem B8.2. Check if the piping is adequate.

$$p^* = (2)(37.57) = 75.14 \text{ psia}$$

Then,

$$p_1 = (75.14)(3.4193) = 256.93 \text{ psia (17.72 bar)}$$

The piping is still adequate because the calculated $p_1 < 0.5\, p_0$.

Problem B8.4. Keep the mass flow as in Problem B8.2, but double the length of the pipe. Check the pressure p_1:

$$fL/D = (2)(4.5604) = 9.1208$$

at this $f\, L/D$,

$$(p_1/p^*) = 4.4854$$

$$\text{Ma} = 0.243$$

and

$$p_1 = (37.57)(4.4854) = 168.52 \text{ psia (11.62 bar)}$$

which means that the line size is sufficient.

Problem B8.5. For the same mass flow and the same pipe as in Problem B8.2, assume that the air temperature in the vessel $t_F = 500°\text{F}$ (260°C).

$$p^* = \frac{20}{0.0884} \sqrt{\frac{(2)(53.3)(460 + 500)}{(32.174)(1.4)(2.4)}}$$

$$= 6960.97 \text{ lb}_f/\text{ft}^2 = 48.34 \text{ psia}$$

$$p_1 = (3.4193)(48.34) = 165.29 \text{ psia (11.40 bar)}$$

The line size is sufficient.

Problem B8.6. For the same mass flow and the same pipe as in Problem B8.2, use the pipe diameter of 2 in (Schedule 40) and calculate p_1.

$$D = 2.067 \text{ in } (A = 0.0233 \text{ ft}^2)$$

$$p^* = 37.57\,\frac{0.0884}{0.0233} = 142.54 \text{ psia}$$

$$f\frac{L}{D} = (0.019)\frac{(90)(12)}{2.067} = 9.9274$$

Then

$$(p/p^*) = 4.644$$

$$\text{Ma} = 0.235$$

and

$$p_1 = (142.54)(4.644) = 661.96 \text{ psia } (45.64 \text{ bar})$$

The calculated pressure p_1 is too high. It is even higher than the pressure p_0 within the vessel. This line cannot be used for releasing the required flow.

Problem B8.7. For the same flow and the same pipe length as in Problem B8.2, use the pipe diameter of 8 in (Schedule 40), and calculate p_1.

$$D = 7.981 \text{ in } (A = 0.3474 \text{ ft}^2)$$

$$f = f_T = 0.014$$

$$p^* = 37.57\,\frac{0.0884}{0.3474} = 9.56 \text{ psia}$$

Because $p^* < p_{\text{atm}}$, the line is not choked. To calculate the pressure p_1 after the valve, the additional length, L_{add}, of the pipe, required for choked conditions at the exit, should be calculated first.

Assuming

$$p_{\text{amb}} = p_{\text{atm}} = 14.7 \text{ psia}$$

$$\frac{p_{\text{atm}}}{p^*} = \frac{14.7}{9.56} = 1.5376$$

From Fanno line tables, for $(p/p^*) = 1.5376$, the following is found for the existing pipe outlet

$$fL_{\text{add}}/D = 0.2467$$

$$\text{Ma} = 0.6814$$

Therefore,

$$L_{\text{add}} = \frac{\left(f\frac{L_{\text{add}}}{D}\right)}{\frac{f}{D}} = \frac{(0.2467)(7.981)}{(0.014)(12)} = 11.72 \text{ ft}$$

and the fictitious pipe length from the choked pipe exit to the valve outlet

$$L_{\text{fict}} = 90 + 11.72 = 101.72 \text{ ft}$$

The corresponding $(f\,L/D)_{\text{fict}}$ value, starting from the choked exit to the valve, is

$$\left(f\frac{L}{D}\right)_{\text{fict}} = \frac{(0.014)(101.72)(12)}{7.981} = 2.1412$$

For this $(f\,L/D)_{\text{fict}}$, the following is obtained from the Fanno line computerized calculation, similar to that explained in Problem B8.2 (or from Fanno line tables for $k = 1.4$):

$$(p/p^*) = 2.6306$$

$$\text{Ma} = 0.4096$$

Therefore,

$$p_1 = (9.56)(2.6306) = 25.15 \text{ psia } (1.73 \text{ bar})$$

SINGLE-PHASE FLOW IN NOZZLES, VENTURI TUBES, AND ORIFICES

Theoretical Background

Liquid Service. A nozzle or an orifice in a tank or reservoir may be installed in the wall (Fig. B8.19) or in the bottom.

In the case of a nozzle, the fluid emerges in the form of a cylindrical jet of the same diameter as the throat of the nozzle, but in the case of a sharp-edged orifice, the jet contracts after passing through it, attaining its smallest diameter (vena contracta) and greatest velocity some distance (about one-half of a diameter) downstream from the opening. When installed in the bottom, the distance z from the opening in the bottom of the tank to the liquid free surface must include the length of a nozzle or the distance of the vena contracta from the bottom of the tank. The ratio of jet area A_2 at vena contracta to the area of an orifice A is called the *coefficient of contraction* C_c.

$$C_c = A_2/A \tag{B8.34}$$

For a nozzle $C_c = 1$.

Bernoulli's equation [(Eq. B8.12) without H_p and H_f] applied from a point 1 on the free surface to the center of the vena contracta, point 2, yields the following

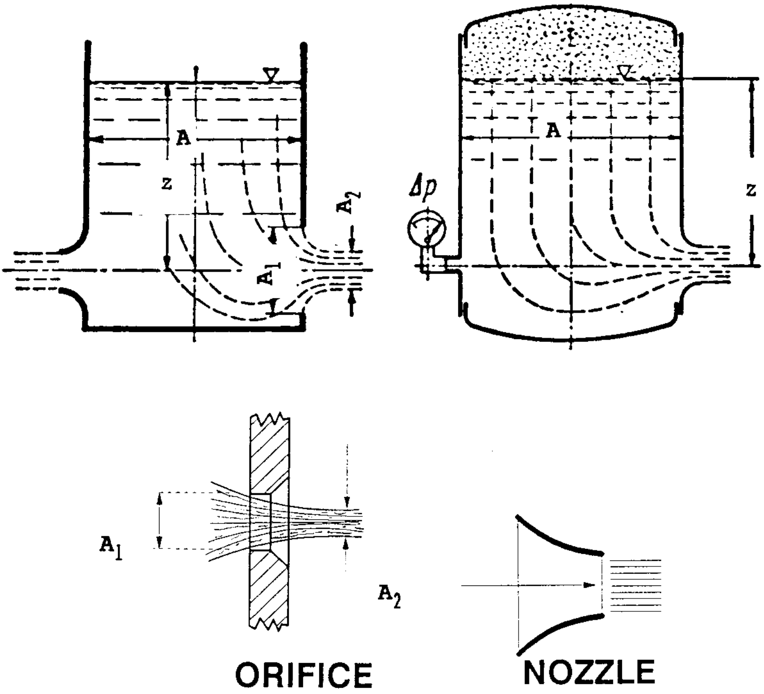

FIGURE B8.19 Typical nozzle and orifice.

expression for the theoretical (no friction) discharge velocity of fluid at the vena contracta ($w_1 = 0$)

$$w_2 = \sqrt{\frac{2g_c}{\rho}\left(p_1 - p_2 + \rho z \frac{g}{g_c}\right)} \text{ ft/s} \tag{B8.35}$$

where p_1 and p_2 are absolute static pressures (lb_f/ft^2) at the free surface in the tank and in the vena contracta respectively. If the fluid is discharged to the atmosphere, p_2 is the atmospheric pressure. For open vessels $p_1 = p_2$.

Hydraulic engineers sometimes prefer to use the following version of Eq. (B8.35):

$$w_2 = \sqrt{2g\left(\frac{p_1 - p_2}{\gamma} + z\right)} \text{ ft/s} \tag{B8.36}$$

Equation (B8.35) or (B8.36) describes the theoretical velocity because the pressure losses between the points 1 and 2 were neglected. The ratio of actual velocity w_a to the theoretical velocity w_t is called the *velocity coeffficient* C_v.

The actual volumetric discharge rate from the orifice is the product of the actual velocity at the vena contracta and the area of the jet at the vena contracta. Using the just-described coefficient of contraction C_c, the mass flow rate from the opening may be calculated from the following expression

$$\dot{m} = C_v C_c A \rho w_2 \tag{B8.37}$$

where

$$C_d = C_v C_c \tag{B8.38}$$

is called the *discharge coefficient.*

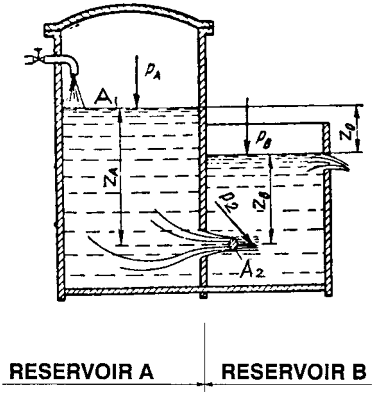

FIGURE B8.20 Typical submerged nozzle or orifice

The velocities and quantities of liquid discharged from a submerged orifice or nozzle (Fig. B8.20) are determined by the same formulas as just presented. The different symbols in Eqs. (B8.35) and (B8.36) are understood in this case as follows:

$z = z_A$ Immersion depth of the center of the opening relative to the free liquid level in reservoir A, ft

$p_1 = p_A$ Static pressure at the free surface A in reservoir, $\mathrm{lb_f/ft^2}$

$p_2 = p_B + g\rho z_B$ Static pressure in the vena contracta jet, $\mathrm{lb_f/ft^2}$

It is preferable that the actual coefficient of discharge C_d of an orifice or a nozzle be determined by calibration. Such calibration should encompass the entire range of flow rates to be experienced. If an orifice or a nozzle is manufactured according to the ASME specification (Ref. 13), then the appropriate values of C_d, as described in Ref. 13 may be used for flow rate calculations.

Consider now a flow nozzle installed in a horizontal pipe (Fig. B8.21), where $z_1 = z_2 =$ const. Because with an incompressible fluid (i.e., a liquid) the temperature does not change, the density is constant. Thus, the continuity equation becomes

$$w_1 \frac{\pi D^2}{4} = w_2 \frac{\pi d^2}{4} \tag{B8.39}$$

and the Bernoulli equation applied from Section 1 to Section 2 is

$$\frac{w_1^2}{2g_c} + \frac{p_1}{\rho} = \frac{w_2^2}{2g_c} + \frac{p_2}{\rho} \tag{B8.40}$$

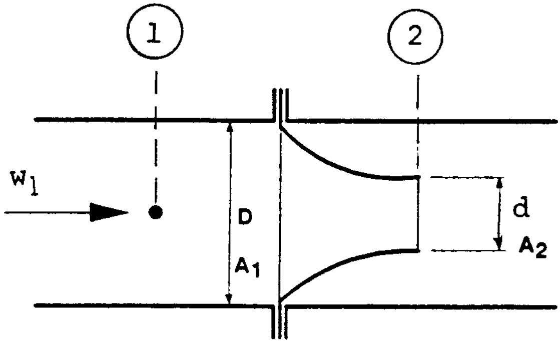

FIGURE B8.21 Flow nozzle in a pipe.

Substituting w_1 from Eq. (B8.39) into Eq. (B8.40) the following expression for the theoretical velocity w_2 is obtained (no friction):

$$w_2 = \sqrt{2g_c \frac{p_1 - p_2}{\rho} \frac{1}{1 - \beta^4}} \text{ ft/s} \tag{B8.41}$$

where $\beta = d/D$, and the approach velocity factor, F_{wa}, is

$$F_{wa} = \frac{1}{1 - \beta^4} \tag{B8.42}$$

Because most materials expand or contract as their temperature changes, an area factor F_a (Fig. B8.22) for the thermal expansion of the primary element (nozzle or orifice) must be introduced in order to find an actual flow area. In general, the actual flow rate is less than the theoretical flow. Therefore, to obtain the actual flow, the discharge coefficient C_d must be introduced (empirical value) into the theoretical Eq. (B8.41):

$$C_d = \frac{\text{actual flow rate}}{\text{theoretical flow rate}} \tag{B8.43}$$

Thus, the actual mass flow rate through a flow nozzle is

$$\dot{m} = F_a A_2 \rho C_d w_2 \tag{B8.44}$$

Equation (B8.44), which was derived for a flow nozzle, holds equally well for horizontal Venturi tubes and for orifices. The following factor is frequently used in calculations and is called the flow coefficient:

$$C = \frac{C_d}{\sqrt{1 - \beta^4}} \tag{B8.45}$$

The values of C_d and C are different for each different type of primary element: Venturi tube, flow nozzle, and orifice. Also, with flow nozzles and orifices, the

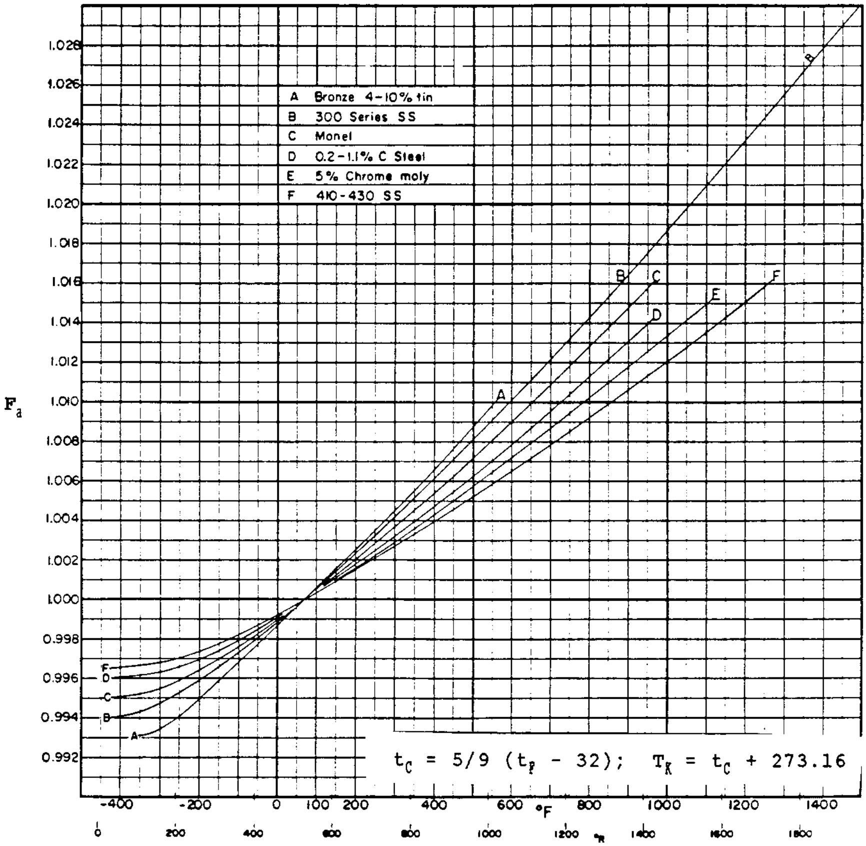

FIGURE B8.22 Area factors, F_a, for the thermal expansion of primary elements. (*From Ref. 13.*)

values depend upon the locations of the pressure taps; and, with the orifice, the values differ with the type of inlet edge, whether square and thin or rounded.

Values of C for long-radius nozzles and square-edged orifices are available in Ref. 7. For a classical Venturi tube, the discharge coefficients C_d are[13]:

	C_d
Rough-cast entrance cone	0.984
Machined entrance cone	0.995
Rough-welded sheet metal entrance cone	0.985

Each obstacle in a flow path generates a permanent pressure drop Δp_p. The pressure profile in a pipe due to an orifice insertion is shown in Fig. B8.23.

The permanent pressure loss through a primary element of a *flowmeter,* with an orifice, a nozzle, or a Venturi tube, is shown in Fig. B8.24. The Venturi tube

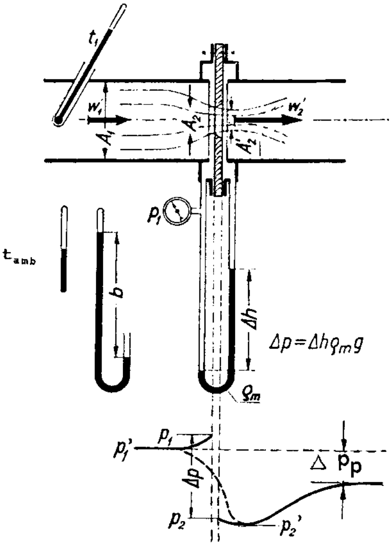

FIGURE B8.23 Pressure profile in a pipe with an orifice. (*From Ref. 15.*)

has a low overall loss due to the gradually expanding conical section, which aids in efficient reconversion of the high kinetic energy at the throat into pressure.

Steam and Gas Service. Because the static head is not considered in gas systems, there is no need to distinguish the case of outflow from a reservoir from that of flow in a pipe.

Consider the flow of a perfect gas through a converging nozzle (Fig. B8.25). By applying Eqs. (B8.7) and (B8.8) to the inlet and outlet of a nozzle, and neglecting potential energy, the following result is found for an insentropic flow:

$$w_{2s} = \sqrt{2g_c J(h_0 - h_{2s})} \tag{B8.46}$$

where h_0 is the stagnation enthalpy at the nozzle inlet [see Eq. (B8.9)].

If there are no losses due to friction or heat transfer, the change of state of a gas is isentropic (s = const), and using the gas properties relationships (Ref. 2, typical), Eq. (B8.46) yields:

$$w_{2s} = \sqrt{2g_c J c_p T_0 \left(1 - \frac{T_{2s}}{T_0}\right)} \tag{B8.47}$$

or

$$w_{2s} = \sqrt{2g_c \frac{k}{k-1} p_0 v_0 \left[1 - \left(\frac{p_2}{p_0}\right)^{(k-1)/k}\right]} \tag{B8.48}$$

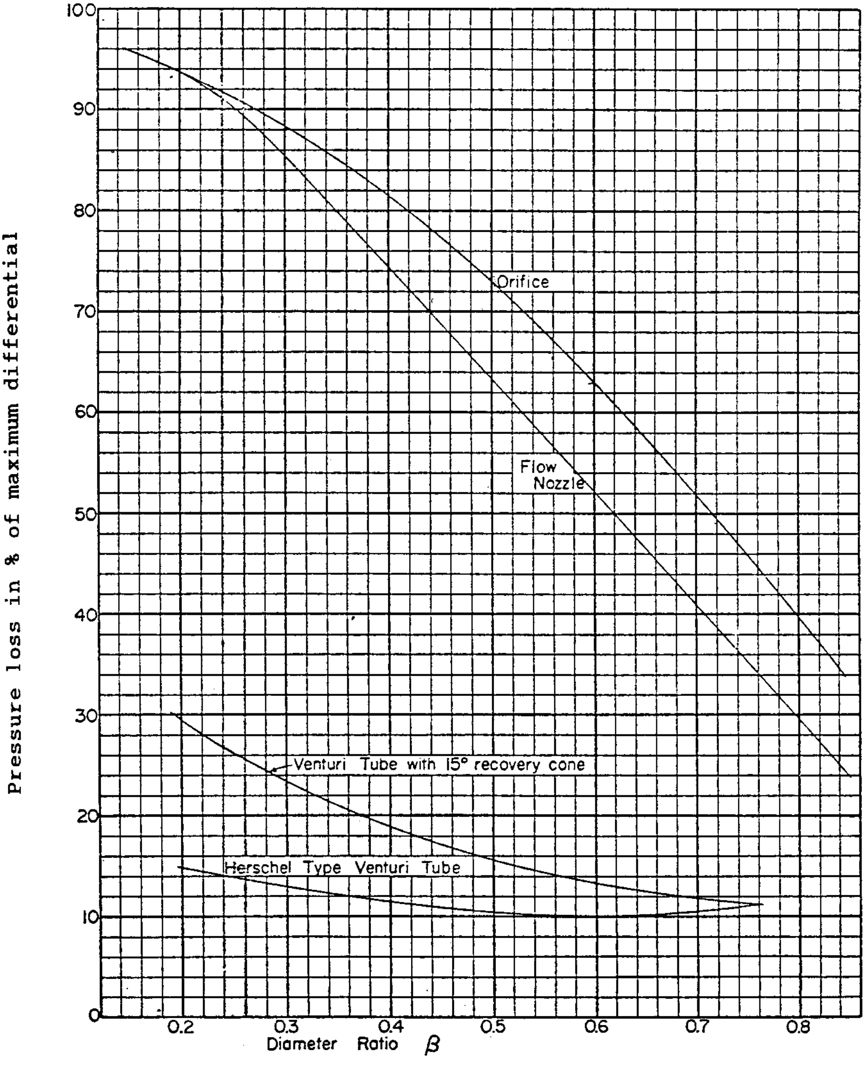

FIGURE B8.24 Permanent pressure loss through primary elements of flowmeters. (*From Ref. 13.*)

which was first derived by De St. Venant and Wantzel in 1839. Equation (B8.48) is written in terms of inlet stagnation conditions, where:

$$T_0 = T_1 + \frac{w_1^2}{2g_c J c_p} \tag{B8.49}$$

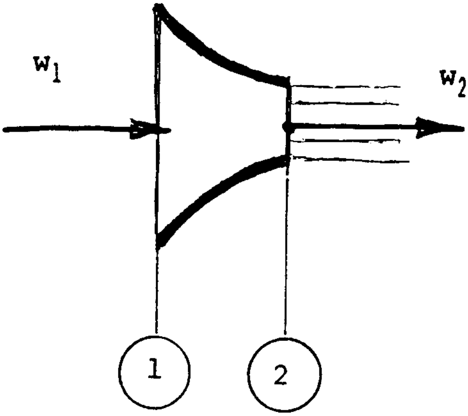

FIGURE B8.25 Fluid flow in a converging nozzle.

and for an isentropic process of a perfect gas:

$$p_0 = p_1 \left(\frac{T_0}{T_1}\right)^{k/(k-1)} \tag{B8.50}$$

The mass flow rate of a gas through the cross section area A_2 can be calculated from:

$$\dot{m} = \frac{A_2 w_{2s}}{v_{2s}} = A_2 \Psi_s \sqrt{\frac{p_0}{v_0}} \ \mathrm{lb_m/s} \tag{B8.51}$$

where

$$\Psi_s = \sqrt{2 g_c \frac{k}{k-1} \left[\left(\frac{p_2}{p_0}\right)^{2/k} - \left(\frac{p_2}{p_0}\right)^{(k+1)/k}\right]} \tag{B8.52}$$

Figure B8.26 shows the mass flow rate $\dot{m}$ plotted against p_2/p_0 for a specified gas which is characterized by its $k = c_p/c_v$ value. The flow rate becomes zero when $(p_2/p_0) = 1$. As the pressure p_2 decreases, the flow rate increases to its maximum value at p^*/p_0 (critical pressure ratio). At $(p_2/p_0) < (p^*/p_0)$, Eq. (B8.51) predicts decreasing flow to zero at $(p_2/p_0) = 0$. However, experiments show that in a flow through a convergent nozzle, the pressure at the exit cross section A_2 cannot fall below the value of p^* and the flow rate does not change, no matter how low the backpressure p_2. At the critical pressure ratio the mass flow rate reaches its maximum value and the flow is said to be *choked.* The maximum flow rate at the choke point is called the *critical flow rate.* Critical or mass limiting flow is characteristic of compressible fluid systems.

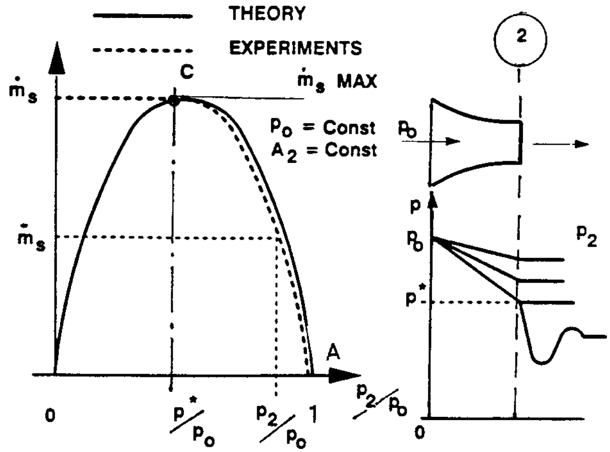

FIGURE B8.26 Mass flow rate versus p_2/p_0 ratio, and the pressure distribution within the nozzle versus p_2.

The value of the critical pressure ratio (p^*/p_0) may be found from the following conditions:

$$\frac{d\dot{m}_s}{d(p_2/p_0)} = 0 \quad \text{or} \quad \frac{d\Psi_s}{d(p_2/p_0)} = 0 \tag{B8.53}$$

Applying this condition to Eq. (B8.52) leads to the critical pressure ratio:

$$\beta_s = \frac{p^*}{p_0} = \left(\frac{2}{k+1}\right)^{\frac{k}{k-1}} \tag{B8.54}$$

where p_0 is described by Eq. (B8.50). Then, substituting the critical pressure ratio for p_2/p_0, Eq. (B8.52) yields:

$$\Psi_{s\,\max} = \sqrt{g_c k \left(\frac{2}{k+1}\right)^{\frac{k+1}{k-1}}} \tag{B8.55}$$

and the corresponding maximum flow rate is

$$\dot{m}_{s\,\max} = A_2 \Psi_{s\,\max} \sqrt{\frac{p_0}{v_0}} \tag{B8.56}$$

For $(p_2/p_0) > p^*/p_0$, the mass flow rate must be calculated from Eq. (B8.51) or by the simplified equation presented by Bendemann in 1907.[10] It was proved by

Bendemann that the arc AC in Fig. B8.26 can be replaced with a high degree of accuracy by a quadrant of an ellipse:

$$\left(\frac{\dot{m}}{\dot{m}_{s\,\max}}\right)^2 + \frac{\left(\frac{p_2}{p_0} - \beta_S\right)^2}{(1-\beta_s)^2} = 1 \tag{B8.57}$$

The remaining thermodynamic parameters (in addition to the critical pressure p^*) at the nozzle throat, corresponding to the maximum flow rate of an ideal gas, are the following:

1. Temperature may be determined by using the relation (see Ref. 11):

$$\frac{T^*}{T_0} = \frac{2}{k+1} \tag{B8.58}$$

For T_0 see Eq. (B8.49).

2. Specific volume may be calculated from another relation for an isentropic expansion

$$\frac{v^*}{v_0} = \left(\frac{k+1}{2}\right)^{1/(k-1)} \tag{B8.59}$$

3. The gas velocity may be calculated from the following expression

$$w_{2\,\max} = \alpha_s \sqrt{p_0 v_0} \tag{B8.60}$$

where

$$\alpha_s = \sqrt{2g_c \frac{k}{k+1}} \tag{B8.61}$$

Because $p_0 v_0 = RT_0$, also

$$w_{2\,\max} = \alpha_s \sqrt{RT_0} \tag{B8.62}$$

It will be observed that for the same perfect gas (α_s, R) the maximum velocity depends only upon its initial stagnation temperature (before a nozzle). It can be shown that Eq. (B8.60) or (B8.62) represents a velocity of sound in the choked exit plane of a nozzle:

$$w_{2\,\max} = \sqrt{g_c k R T^*} = \sqrt{g_c k p^* v^*} = c \tag{B8.63}$$

The ASME report on fluid meters (Ref. 13) presents slightly modified equations which are more suitable for precise differential-pressure flow-metering techniques. See this document for procedures and more information about flow measurement using orifices, nozzles, or Venturi tubes.

Sample problems concerning ASME fluid meters may be found in Refs. 13 and 14.

Applications: Flow Restriction

Flow-restricting orifices are used where a continuous small flow of fluid (bleeding) is required. Flow-restricting orifices are usually not designed according to requirements of the ASME specification for fluid metering devices. In most cases, they are round openings drilled in an orifice plate. Their fluid entrance may be sharp-edged, beveled, or well-rounded.

It is suggested that reasonably accurate approximations in flow rate estimations may be obtained by using equations presented in the last subsection. If the entrance is well-rounded, C values would tend to approach those for ASME nozzles, whereas openings with square entrances would have characteristics similar to those for square-edged ASME orifices. The minimum allowable orifice size should be 1⁄16 in to prevent clogging. The recommended thicknesses of orifice plates for carbon steel or chrome-moly steel are given in Table B8.15.

Applications: Fluid Flow Metering

Recommended conditions, procedures, and data for measuring the flow of fluids, particularly with the three principal differential-pressure meters—the orifice, the flow nozzle, and the Venturi tube—are presented in the ASME test codes.[13,14]

Applications: Sample Problem B8.8[15]

This could be a model for important safety related calculations.

Air is contained in a vessel having a volume of $V_{\text{vess}} = 80$ ft^3 (2.27 m^3). The initial state of the gas in the vessel corresponds to its pressure of $p_0 = 250$ psia (17.24 bar), and its temperature of $t_F = 70$°F (21.11°C). The gas line of internal diameter $d = 1$ in (25.4 mm) broke off completely at the nozzle (well-rounded inlet) and air started to leak into the surroundings at the atmospheric pressure of $p_{\text{atm}} = 14.7$ psia (1.01 bar). Assume that due to a slow process of air expansion in the vessel, while the pressure within the vessel drops, its temperature remains constant (the vessel is not insulated, and air is absorbing heat from surroundings through the vessel walls). Also, assume that the air expansion in the nozzle is isentropic.

Calculate:

1. Time t_A required to reach the pressure $p_A = 50$ psia (3.45 bar) within the vessel
2. Time t_B required to reach the pressure $p_B = 20$ psia (1.38 bar) within the vessel

Solution:

1. For air ($k = 1.4$), the critical pressure ratio [Eq. (B8.54)] is

$$\beta_s = 0.5283$$

At the end of the time period t_A the nozzle pressure ratio is

$$\frac{p_{\text{atm}}}{p_A} = \frac{14.7}{50} = 0.294 < 0.5283$$

TABLE B8.15 Restriction Orifice Plates: Pressure-Temperature Ratings. Allowable Differential Pressures Across the Orifice Plate. Plate Material: Carbon Steel or Chrome-Moly

Pipe size, NPS	Orifice plate OD, in	Temp. °F	Pressure, psi						
			Plate thickness, in						
			⅛ in	³⁄₁₆ in	¼ in	⁵⁄₁₆ in	⅜ in	⁷⁄₁₆ in	½ in
1½	2⅞	300	333	748	1330	2078	—	—	—
		600	283	637	1133	1770	2549	—	—
		900	149	335	596	932	1342	1826	2385
2	3⅝	300	214	482	857	1339	1928	2624	—
		600	182	411	730	1140	1642	2235	—
		900	96	216	384	600	864	1176	1536
2½	4⅛	300	146	329	585	914	1316	1791	2339
		600	125	280	498	778	1121	1525	1992
		900	66	147	262	410	590	803	1049
3	5	300	99	222	395	616	888	1208	1578
		600	84	189	336	525	756	1029	1344
		900	44	99	177	276	398	542	707
4	6³⁄₁₆	300	59	134	239	373	537	731	955
		600	50	114	203	317	457	623	813
		900	26	60	107	167	241	328	428
6	8½	300	28	62	110	172	248	337	440
		600	23	53	94	147	211	287	375
		900	12	28	49	77	111	151	197
8	10⅝	300	16	37	65	102	146	199	260
		600	14	31	55	86	125	169	221
		900	7	16	29	46	66	89	117
10	12¾	300	10	24	42	65	94	128	167
		600	9	20	36	56	80	109	142
		900	5	11	19	29	42	57	75
12	15	300	7	17	30	46	67	91	119
		600	6	14	25	40	57	78	101
		900	3	7	13	21	30	41	53
14	16¼	300	6	14	25	39	55	76	99
		600	5	12	21	33	47	64	84
		900	3	6	11	17	25	34	44
16	18½	300	5	11	19	30	42	58	76
		600	4	9	16	25	36	49	64
		900	2	5	9	13	19	26	34
18	21	300	4	8	15	23	34	46	60
		600	3	7	13	20	29	39	51
		900	2	4	7	10	15	20	27
20	23	300	3	7	12	19	27	37	48
		600	3	6	10	16	23	32	41
		900	1	3	5	8	12	17	22
22	25¼	300	2	6	10	16	22	31	40
		600	2	5	9	13	19	26	34
		900	1	3	4	7	10	14	18
24	27¼	300	2	5	8	13	19	26	34
		600	2	4	7	11	16	22	29
		900	1	2	4	6	8	12	15

Temperature conversion: $t_C = (t_F - 32.0)/1.8$
1 inch = 25.4 mm

For pressure conversion see Table B8.1.

Source: Stone & Webster.

and therefore Eq. (B8.56) is here applicable. This means that the decrease in mass inventory of air in the vessel in time interval t_A may be expressed by the following differential equation:

$$dm = -\dot{m}_{s\,\max}\,dt = -\Psi_{s\,\max}\,A_2\,\frac{p}{\sqrt{RT_0}}\,dt \tag{a}$$

Under assumption of T_0 = const, the following is also true (the Clapeyron equation):

$$dm = \frac{V_{\text{vess}}}{RT_0}\,dp \tag{b}$$

Then, from Eqs. (a) and (b), the following is derived:

$$dt = -\frac{V_{\text{vess}}}{\Psi_{s\,\max}\,A_2\,\sqrt{RT_0}}\,\frac{dp}{p} \tag{c}$$

For $k = 1.4$, Eq. (B8.55) yields

$$\Psi_{s\,\max} = 3.8839$$

The nozzle flow area is

$$A_2 = \frac{\pi d^2}{4} = 0.00545\ \text{ft}^2$$

For air $R = 53.35$ $(\text{lb}_\text{f}\cdot\text{ft})/(\text{lb}_\text{m}\cdot{}^\circ\text{R})$. Then, substituting all partial results into Equation (c), the following is found:

$$dt = -\frac{80}{(3.8839)\,(0.00545)\sqrt{(53.35)\,(460+70)}}\,\frac{dp}{p} = -22.476\,\frac{dp}{p}$$

and after integration:

$$t_A = 22.476\ln\frac{p_0}{p_A} = 22.476\ln\left(\frac{250}{50}\right) = 36.17\ \text{s}$$

2. As long as the pressure in the vessel is higher than

$$p_{\text{lim}} = \frac{p_{\text{atm}}}{\beta_s} = \frac{14.7}{0.5283} = 27.825\ \text{psia}$$

the air flow through the nozzle may be calculated by using Eq. (B8.56). For lower pressures in the vessel, however, the flow rate may be determined by using

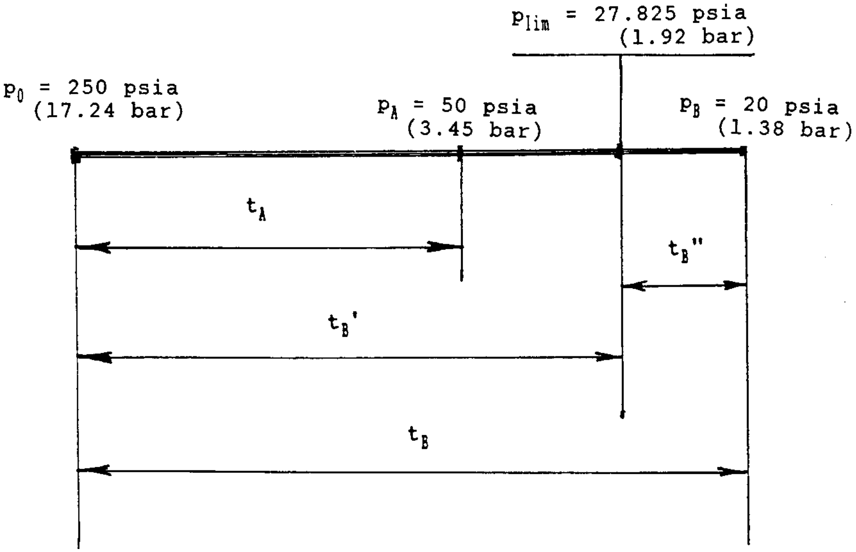
p_{lim} = 27.825 psia (1.92 bar)
p_0 = 250 psia (17.24 bar)
p_A = 50 psia (3.45 bar)
p_B = 20 psia (1.38 bar)
t_A
t_B''
t_B'
t_B

FIGURE B8.27 Various time intervals before reaching the final pressure p_B within the vessel.

Eq. (B8.57). Therefore, the time interval before reaching the pressure p_B should be divided into two steps (see Fig. B8.27). In the first step, the above written Eq. (*c*) is still valid. For this step:

$$t'_B = 22.476 \ln\left(\frac{250}{27.825}\right) = 49.35 \text{ s}$$

For the second step the following differential equation holds [see Eq. (B8.56) and the Bendemann ellipse Eq. (B8.57)]:

$$dm = -\Psi_{s\,\max} A_2 \frac{p}{\sqrt{RT_0}} \sqrt{1 - \left[\frac{p_{\text{atm}} - \beta_s p}{p(1-\beta_s)}\right]^2}\, dt \qquad (d)$$

Then, combining Eqs. (*b*) and (*d*), the following is found:

$$dt = -22.476 \frac{dp}{p\sqrt{1 - \left[\frac{p_{\text{atm}} - \beta_s p}{p(1-\beta_s)}\right]^2}} \qquad (e)$$

and after integration:

$$t''_B = -22.476 \frac{1}{\sqrt{-a}}\left[\sin^{-1}\frac{-(b + 2ap_B)}{\sqrt{b^2 - 4ac}} - \sin^{-1}\frac{-(b + 2ap_{\text{lim}})}{\sqrt{b^2 - 4ac}}\right] \qquad (f)$$

where

$$a = \frac{1 - 2\beta_s}{(1 - \beta_s)^2} = -0.2544 \tag{g}$$

$$b = \frac{2\beta_s p_{\text{atm}}}{(1 - \beta_s)^2} = 10{,}052\ \text{lb}_\text{f}/\text{ft}^2 \tag{h}$$

$$c = -\left[\frac{p_{\text{atm}}}{1 - \beta_s}\right]^2 = -20{,}138{,}536\ (\text{lb}_\text{f}/\text{ft}^2)^2 \tag{i}$$

After substituting items (*g*), (*h*), (*i*) into Eq. (*f*), the following time interval is found:

$$t''_B = 7.66\ \text{s}$$

Therefore, the total evacuation time from initial pressure in the vessel, $p_0 = 250$ psia (17.24 bar) to pressure $p_B = 20$ psia (1.38 bar) is equal to

$$t_B = t'_B + t''_B = 49.35 + 7.66 = 57.01\ \text{s}$$

For those who prefer to work with computers instead of solving differential equations, there is an option of solving this problem by using numerical analysis. Choosing a sufficiently small time step, and in each step balancing the system thermodynamically, while the outflow progresses (DO LOOP), the time of reaching the critical pressure ratio (or any pressure within the vessel) may be monitored by using appropriate WRITE statements.

STEADY TWO-PHASE FLOW

Introduction

A *phase* is simply one of the states of matter and can be either a gas, a liquid, or a solid. The general subject of two-phase flow includes gas-liquid, gas-solid, and solid-liquid flow.

The term *multicomponent* is used to describe flows in which the phases do not consist of the same chemical substance. In the petrochemical industries many processes involve the evaporation (and condensation) of binary ($n = 2$) and multicomponent mixtures. Pure single-component, two-phase flows are those during evaporation and condensation of the same chemical substance. For example, steam-water flow is a single-component, two-phase flow, while air-water is a two-phase, two-component flow.

The main emphasis of the following presentation is on the two-phase flow of water.

Regimes of Gas-Liquid Flow

Description. Cocurrent, simultaneous flows of gases and liquids occur in numerous components of plant equipment such as steam generators, drain lines, and oil and natural gas pipelines.

Ever since the earliest visual observations of two-phase flow, it has been recognized that there are natural varieties of flow patterns. In addition to the random character of each flow configuration, two-phase flows are never fully developed. In fact, the gas phase expands due to the pressure drop along a pipe leading to a modification of the flow structure. The flow pattern depends also upon the geometry changes of a flow channel (bends, valves, etc.). Flow patterns will be classified according to pipe geometry and flow direction (upward, downward, cocurrent, countercurrent), and several shown in Refs. 16 and 17 are discussed in the following subsections.

Upward Cocurrent Flow in Vertical Pipes. The main flow patterns encountered in a vertical pipe are shown in Fig. B8.28.[18] Bubbly flow is certainly the most widely known configuration, although at high velocity its milky appearance prevents it from being easily recognized. Bubbles are spherical only if their diameters do not exceed 1 mm; whereas beyond 1 mm their shape is variable. Roumy[18] distinguishes two bubbly flow patterns. In the *independent bubble configuration,* bubbles are spaced and do not interact with each other. On the other hand, in the *packed configuration,* bubbles are crowded together and strongly interact with each other.

Slug flow is composed of a series of gas plugs. The head of a gas plug is generally blunt, whereas its end is flat with a bubbly wake. A simple visual observation reveals that the liquid film which surrounds a gas plug moves downward with respect to the pipe wall.

Given a constant liquid flow rate, an increase of the gas flow rate leads to a lengthening and a breaking of the gas plugs. The flow pattern evolves toward an annular flow in a chaotic way. This transition configuration is called a *churn flow.*

Dispersed annular flow is characterized by a central gas core loaded with liquid droplets and flowing at a higher velocity than the liquid film which clings to the wall. Droplets are torn off from the crest of the waves which propagate on the surface of the liquid film. They diffuse in the gas core and can eventually impinge

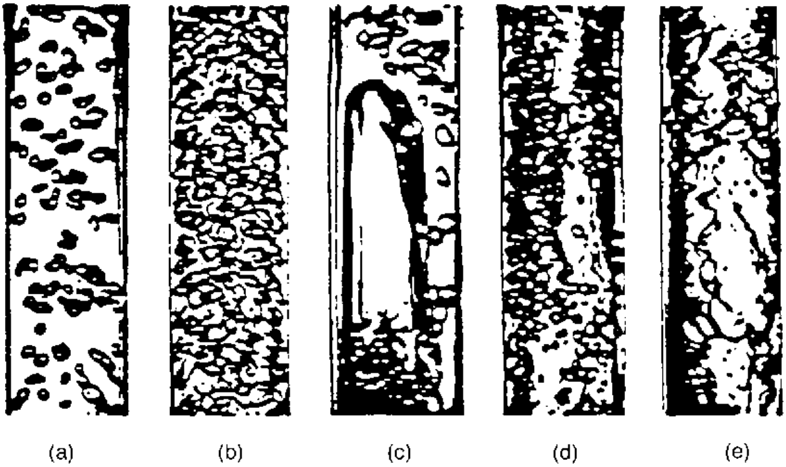

FIGURE B8.28 Upward cocurrent flow in a vertical 32 mm diameter pipe. Air-water flow pattern: (*a*) independent bubbles; (*b*) packed bubbles; (*c*) slug flow; (*d*) churn flow; (*e*) annular flow. (*From Ref. 18.*)

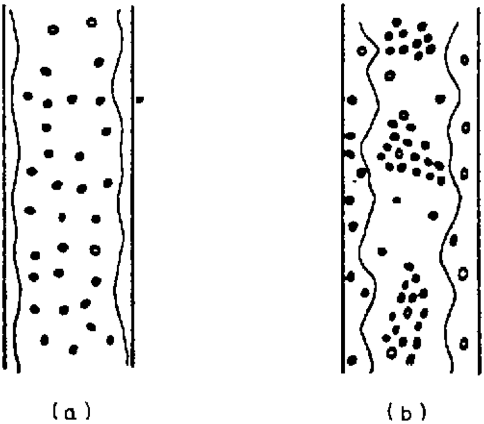

FIGURE B8.29 Annular flows: (*a*) dispersed; (*b*) wispy. (*From Ref. 19.*)

onto the film surface. Hewitt and Roberts[19] evidenced the existence of a wispy annular flow where the liquid droplets gather into clouds within the central gas core (Fig. B8.29).

Finally, if the wall temperature is high enough to vaporize the film, the droplets will constitute a *mist flow.* Figure B8.30 shows the configurations taken by a liquid-vapor flow in a heated pipe as a function of the wall heat flux. The liquid enters the pipe at a constant flow rate and at a temperature lower than the saturation temperature. When the heat flux increases, the vapor appears closer and closer to

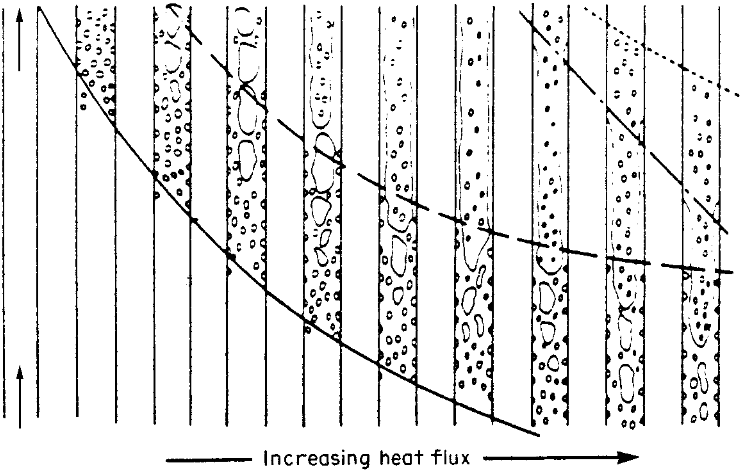

FIGURE B8.30 Convective boiling in a heated channel at a constant liquid flow rate. (—) Onset of nucleate boiling; (— — —) end of nucleate boiling; (—·—·—) Dryout; (---) limit of the superheated region. (*From Ref. 20.*)

the pipe inlet. The *local boiling length* is the extent of pipe where the bubbles are generated at the wall and condense in the liquid core, where the liquid temperature is still lower than the saturation temperature.

The usual way of presenting results of observations of flow patterns is to plot them on a *flow regime map.* A flow map is a two-dimensional representation of the flow pattern existence domains. The coordinate systems are different according to different authors and, so far, there is no agreement on the best coordinate systems. Selecting a series of flow maps is not easy, and no recommendation can be made since no method has proved entirely adequate so far.

Hewitt and Roberts' map (1969) is the most widely used chart for air-water and steam-water flows and is described in Refs. 16 and 17. The steam-water results of Bennett et al., are also well represented in the Hewitt and Roberts' diagram (see Refs. 16 and 17).

Downward Cocurrent Flows in Vertical Pipes. So far the most comprehensive studies of downward cocurrent flow patterns are due to Oshinowo and Charles.[17] These authors distinguish six different flow configurations as shown in Fig. B8.31.

The downward bubbly flow structure is quite different from the upward bubbly flow configuration. In the latter case, bubbles are spread over the entire cross section, whereas in the downward flow, bubbles gather near the pipe axis. This coring effect is similar to the phenomenon observed in a flow of liquid loaded with solid particles whose density is smaller than the liquid density.

When the gas flow rate is increased, the liquid flow rate being held constant, the bubbles agglomerate into large gas pockets. The top of these gas plugs is dome-shaped, whereas the lower extremity is flat with a bubbly zone underneath. This slug flow is generally more stable than in the upward case.

The annular configuration can exhibit several aspects. For small liquid and gas flow rates, a liquid film flows down the wall (*falling film flow*). If the liquid flow rate is higher, bubbles are entrained within the film (*bubbly falling film*). When liquid and gas flow rates are increased a *churn flow* appears, which can evolve into a *dispersed annular flow* for very high gas flow rates.

Oshinowo and Charles proposed a flow map (described in Ref. 17) which was obtained from their own experimental data. They studied two-component mixtures

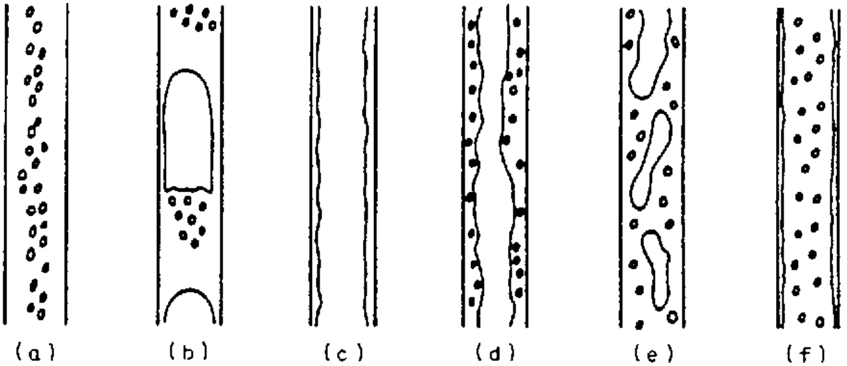

FIGURE B8.31 Downward cocurrent flow in a vertical pipe: air-water flow pattern: (*a*) bubbles; (*b*) slugs; (*c*) falling film; (*d*) bubbly falling film; (*e*) churn; (*f*) dispersed annular. (*From Ref. 21.*)

of air and different liquids flowing in a pipe 1 in (25.4 mm) in diameter at a pressure of around 25 psia (1.7 bar).

Cocurrent Flows in Horizontal and Inclined Pipes. The number of possible flow patterns in a horizontal pipe is higher than in a vertical pipe. This is due to the effect of gravity, which tends to separate the phases and to create a horizontal stratification.

Alves[22] proposed the classification shown in Fig. B8.32. In the *bubbly flow* configuration bubbles are moving in the upper part of the pipe. When the gas flow rate is increased, bubbles coalesce and a *plug flow* takes place. For low liquid and gas flow rates a *stratified flow* appears with a smooth interface. At higher gas rates waves propagate along the interface (*wavy flow*) and can reach the top wall of the pipe, giving rise to a *slug flow*. Finally, at high gas flow rates and low liquid flow rates an *annular flow* can exist, with a thicker film in the lower part of the pipe. These flow pattern names differ depending on the author. As an example, Taitel and Dukler[23] classed plug flows and slug flows under the same category (intermittent flow).

Figure B8.33 shows the evolution of a *vaporizing flow* in a horizontal pipe. The liquid enters the heated pipe with a low flow rate and at a temperature slightly lower than the saturation temperature. An important point concerns the upper part of the tube, which can dry out periodically and then suffer a sudden increase in wall temperature. If the wall temperature is high enough, the wall dries out completely, and the liquid droplets form a *mist flow*.

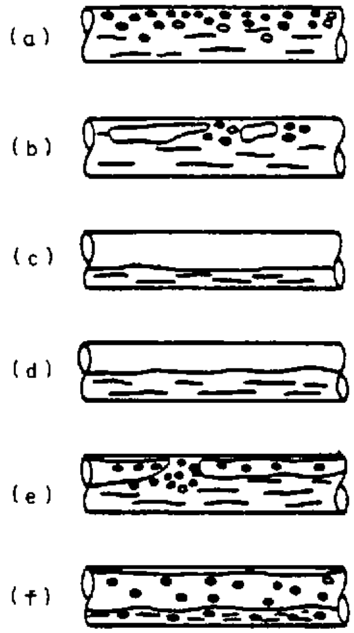

FIGURE B8.32 Flow patterns in a horizontal pipe: (*a*) bubbly flow; (*b*) plug flow; (*c*) stratified flow; (*d*) wavy flow; (*e*) slug flow; (*f*) annular flow. (*From Ref. 22.*)

The earliest and the most durable of regime maps for two-phase gas-liquid flow in horizontal channels was proposed by Baker, as described in Ref. 24. It is commonly used specially in petroleum industries.

Goldmann[25] converted the Baker plot to a very informative representation of flow patterns for an adiabatic (no heat addition) steam-water system as shown in Fig. B8.34 for three different pressures.

Mandhane et al. (see Ref. 17), constructed a flow-regime map based on 5935 data points, 1178 of which concern air-water flows. Its coordinates are the superficial velocities j_f and j_g (volumetric flow rate of a given phase divided by the total cross-sectional area of pipe) calculated at the test section pressure and temperature.

The general trends of Mandhane's map were utilized by Taitel and Dukler.[23] They developed a theoretical approach for the prediction of transition between flow regimes. This approach also provides considerable insight into the mechanisms of the transitions. The generalized flow regime map for a case of horizontal pipes, proposed by Taitel and Dukler,[23,26] is presented in Fig. B8.35.

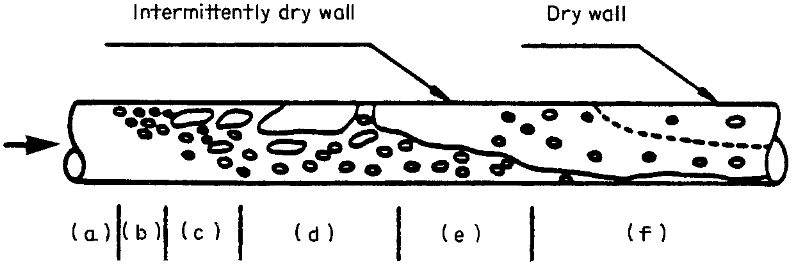

FIGURE B8.33 Evolution of flow pattern in a horizontal evaporator tube: (*a*) Liquid single-phase flow; (*b*) bubbly flow; (*c*) plug flow; (*d*) slug flow; (*e*) wavy flow; (*f*) annular flow. (*From Ref. 17.*)

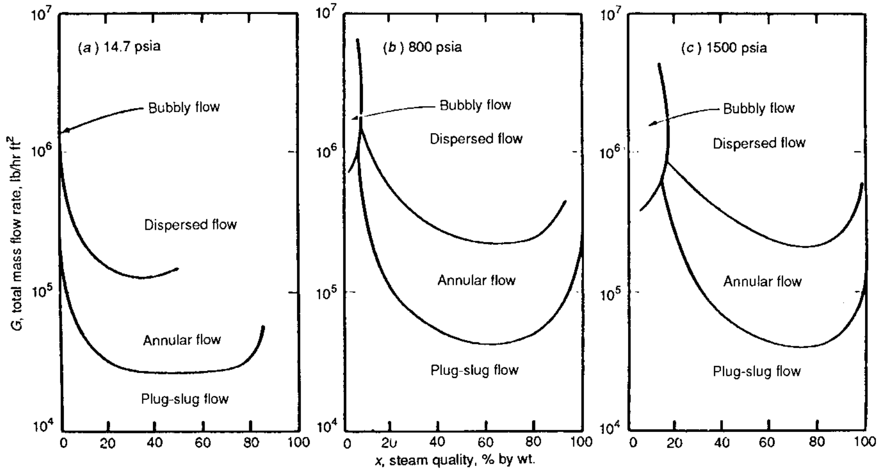

FIGURE B8.34 Flow pattern of two-phase flow. (*From Ref. 25.*)

Mass flux $\dot{G} = \dot{m}/A$ conversion: $1\ \text{lb}_m/(\text{ft}^2 \cdot \text{h}) = 0.0488\ \text{kg}/(\text{dm}^2 \cdot \text{h})$. For pressure conversion to SI units see Table B8.1.

The five regimes considered are: *intermittent* (slug and plug), *stratified smooth, stratified wavy, dispersed bubble,* and *annular-annular dispersed* liquid flow. The condition of stratified flow is central to this analysis. The first step is to define boundaries of these flow regimes. On the generalized flow regime map the transition boundaries (lines *A, B,* and *D* in Fig. B8.35) between different flow regimes are found to be functions of h_f/D only (see Fig. B8.38). When the theory is solved in dimensionless form the following dimensionless groups emerge: *X, Y, T, F,* and *K.*

All dimensionless flow pattern transition criteria are functions of h_f/D, which in turn is a unique function of the dimensionless groups *X* and *Y,* as shown in Fig. B8.36. Thus the transition from stratified to intermittent and to annular-dispersed liquid is uniquely determined by three dimensionless groups *X, Y,* and *F.* Further, for any specified value of *Y,* the transition is uniquely determined by *X* and *F* and can be represented on a generalized two-dimensional map. For example, for horizontal flow ($Y = 0$) a series of values of *X* were selected, and the corresponding values of h_f/D were determined from Fig. B8.36. Then the value of *F* required to

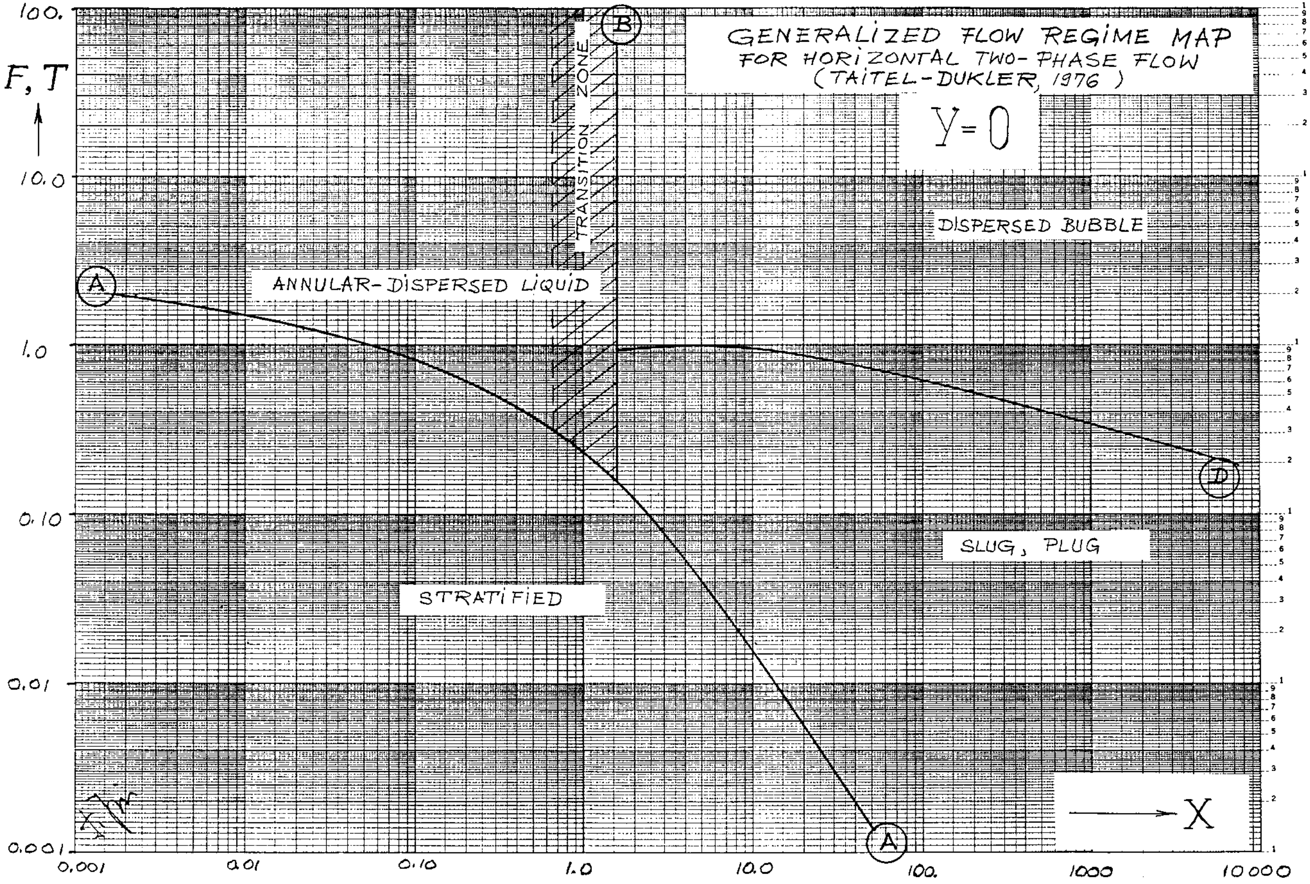

FIGURE B8.35 Generalized flow regime map for horizontal two-phase flow. (*Taitel-Dukler, 1976.*)

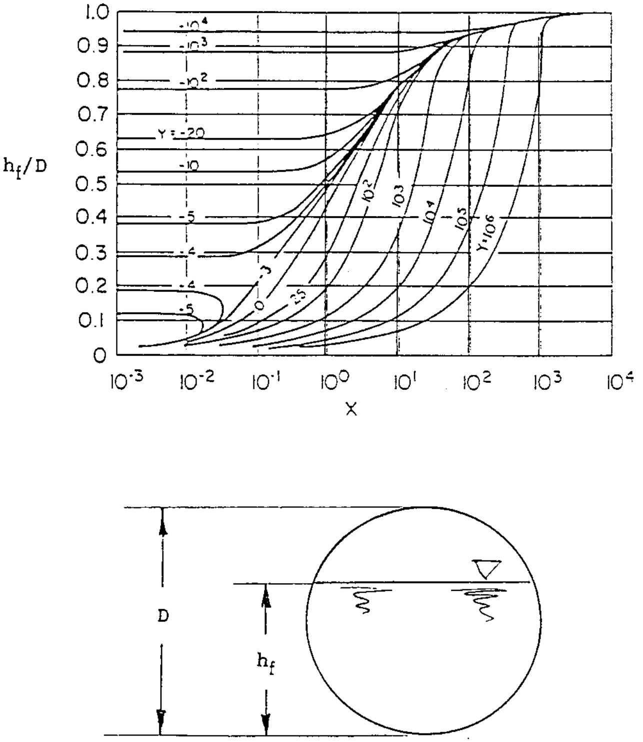

FIGURE B8.36 Equilibrium liquid level as a function of the dimensionless groups X and Y. (*From Ref. 26.*)

satisfy the theoretical transition equation given in the references can be calculated. The curve describing the relation between X and F, which satisfies this theoretical transition equation for horizontal flow, is designated as boundary A in Fig. B8.35. The calculation, as above, may be repeated for inclined pipes with other values of Y specified, by using the corresponding Y-curve in Fig. B8.36.

It is suggested that when the equilibrium liquid level in the pipe is above the pipe centerline, intermittent flow will develop, and if $h_f/D < 0.5$, annular dispersed flow will result. Because transition takes place at constant value of $h_f/D = 0.5$, a specific value of X characterizes the change in regime for any value of Y (see Fig. B8.36). For horizontal pipes ($Y = 0$), this value is $X = 1.6$, and this is plotted in Fig. B8.35 as boundary B. It was observed during experiments that the h_f/D at transition will vary between 0.35 and 0.5. This band of values is shown by the two vertical lines marked B in Fig. B8.35. Visual observations show this transition between the intermittent and annular patterns to be a gradual one that is not well-defined.

For values of X on the right of boundaries A and B in Fig. B8.35, waves will tend to bridge the pipe, forming a liquid slug and an adjacent gas bubble. At high liquid rates and low gas rates, the equilibrium liquid level approaches the top of the pipe, as is apparent from Fig. B8.36. With such a fast-running liquid stream the gas tends to mix with the liquid, and it is suggested that the transition to dispersed bubble flow takes place when the turbulent fluctuations are strong enough to overcome the buoyant forces tending to keep gas at the top of the pipe. The terms in theoretical transition equation are again dependent only on h_f/D and thus on X and Y. For any specific value of Y, a two-dimensional representation for this transition is possible, with X and T used as the dimensionless coordinates. It is possible to map this transition on Fig. B8.35 by using the common X abscissa and T as an ordinate, as shown by curve D calculated for $Y = 0$.

To find a flow regime for actually existing pipe flow conditions, the dimensional groups X, Y, T, F, and K are calculated from the following equations, and are compared with those values in Fig. (B8.35) which correspond to the appropriate boundary line.

Parameter X, the Lockhart-Martinelli parameter

$$X = \sqrt{\frac{(dp/dz)_f}{(dp/dz)_g}} \tag{B8.64}$$

where the quantities $(dp/dz)_f$ and $(dp/dz)_g$ are the frictional pressure drops of the liquid and gas that would be observed if these fluids were flowing alone in the pipe. The value of X can be calculated with the knowledge of flow rates, fluid properties, and tube diameter (consult the references).

Parameter Y, dimensionless pipe inclination parameter (inclination angle β is positive for downward flow). Y is zero for horizontal pipes and represents the relative forces acting on the liquid in the flow direction due to gravity and pressure drop.

$$Y = \frac{(\rho_f - \rho_g)\, g \sin\beta}{g_c (dp/dz)_g} \tag{B8.65}$$

Parameter T, dimensionless dispersed bubble flow parameter: transition between intermittent (slug/plug) and dispersed bubble regimes

$$T = \sqrt{\frac{g_c (dp/dz)_f}{(\rho_f - \rho_g) g \cos\beta}} \tag{B8.66}$$

Parameter F, transition between stratified and intermittent or annular-dispersed liquid regimes (Froude number modified by density ratio)

$$F = \sqrt{\frac{\rho_g}{\rho_f - \rho_g}}\, \frac{j_g}{\sqrt{Dg\cos\beta}} \tag{B8.67}$$

Parameter K, (Weber number) dimensionless wavy flow parameter: transition between stratified smooth and stratified wavy regimes (not shown in Fig. B8.35)

$$K = F\sqrt{\frac{Dj_f}{\nu_f}} \tag{B8.68}$$

It is, of course, not necessary to use a flow regime map at all. Given any set of flow conditions (gas and liquid rates, pressure, pipe size, and pipe inclination angle:

positive for downward flow), the flow pattern that exists for that condition can be determined by comparing appropriate calculated parameters with corresponding values on the transition lines at evaluated h_f/D, by using hand or computerized calculations based on detailed theoretical equations presented in Refs. 23 and 26, with the help of Fig. B8.36 or its computerized representation.

Countercurrent Flow of Steam and Water in Horizontal and Inclined Pipes. Countercurrent flow of steam and water may exist only when a pipe does not run full. There are two very important areas in a plant design where this kind of flow is carefully studied:

1. Design of self-venting lines where the vapor is not carried down the drainpipe with the liquid, but can rise counter to the liquid flow, continuously venting the pipe
2. Initiation of a condensation-induced water hammer in horizontal or nearly horizontal pipes containing steam and subcooled water

The stratified countercurrent flow of a gaseous phase and a liquid is governed by the open channel flow criterion expressed as a liquid Froude number:

$$\mathrm{Fr} = \frac{j_f}{\sqrt{gD}} \tag{B8.69}$$

The stratified void fraction α in a circular pipe versus dimensionless vapor gap is presented in Fig. B8.37.

The region of condensation-induced water hammer in horizontal and nearly horizontal pipes experiencing the countercurrent flow of steam and subcooled water is bound by the *absolute stability limit* at the lower flow boundary and by the *pipe-full limit* at the upper flow boundary. Bjorge and Griffith presented a one-dimensional, stratified model that predicts initiation of a water hammer in those important cases.[27,28]

Designing self-venting lines is discussed later in this section, while the condensation-induced water hammer is described in the later section "Steam-Condensation-Induced Water Hammer."

Pressure Drop in Gas-Liquid Flow (Nonflashing Flow)

The evaluation of the two-phase (TP) pressure drop in an evaporating or condensing channel or in a geothermal pipeline involves integrating the local pressure gradients along the channel length. This local pressure gradient is composed of three terms: a frictional term, an accelerational term, and a static head term[16,17,29]:

$$\left(\frac{\Delta p}{\Delta L}\right)_{\mathrm{TP}} = \left(\frac{\Delta p_F}{\Delta L}\right)_{\mathrm{TP}} + \left(\frac{\Delta p_A}{\Delta L}\right)_{\mathrm{TP}} + \left(\frac{\Delta p_Z}{\Delta L}\right)_{\mathrm{TP}} \tag{B8.70}$$

Using the separated flow (separated phases) model, these three components are respectively given by:

$$\left(\frac{\Delta p_F}{\Delta L}\right)_{\mathrm{TP}} = \Phi_{\mathrm{LO}}^2 \left(\frac{\Delta p_F}{\Delta L}\right)_{\mathrm{LO}} \tag{B8.71}$$

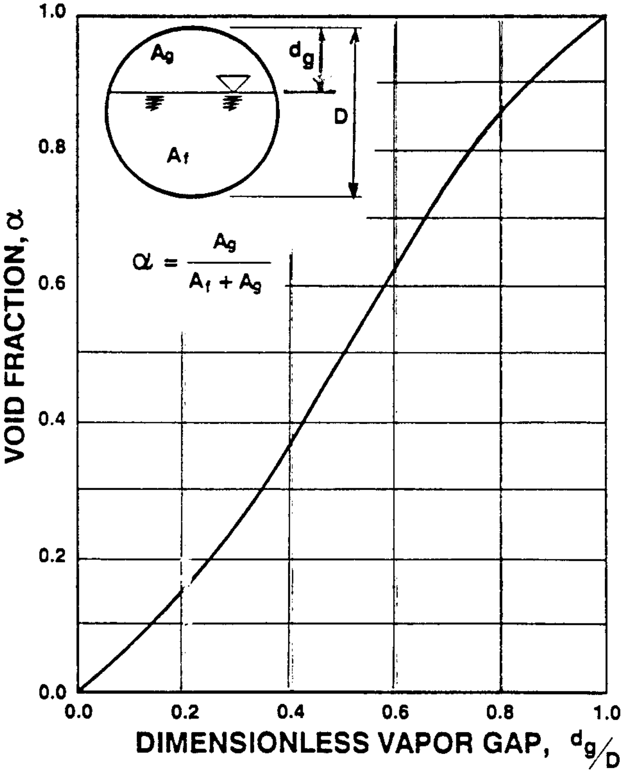

FIGURE B8.37 Void fraction in a circular pipe versus dimensionless vapor gap.

where Φ^2_{LO} is known as the *two-phase frictional pressure drop multiplier,* and $(\Delta p_F/\Delta L)_{\mathrm{LO}}$ is the *frictional pressure drop* calculated from the D'Arcy-Weisbach equation for the total flow when the fluid (liquid and steam) is entirely in the liquid phase, as described in the section "Steady Single-Phase Incompressible Flow in Piping":

$$\left(\frac{\Delta p_A}{\Delta L}\right)_{\mathrm{TP}} = \frac{\dot{G}^2}{g_c}\frac{\Delta}{\Delta L}\left[\frac{x^2 v_g}{\alpha} + \frac{(1-x)^2 v_f}{1-\alpha}\right] \tag{B8.72}$$

where $\dot{G}$ is the total mass flux, x is the quality, and α is the void fraction;

$$\left(\frac{\Delta p}{\Delta L}\right)_Z = \frac{g}{g_c}\sin\theta\left[\frac{\alpha}{v_g} + \frac{1-\alpha}{v_f}\right] \tag{B8.73}$$

where θ is the angle of pipe inclination to the horizontal.

To evaluate the local pressure gradient, expressions are needed for the functions Φ^2_{LO} and α. A very large number of correlations have been proposed for these functions, and a summary of the better-known correlations is given in Ref. 16. Various studies agree that the most accurate correlations for Φ^2_{LO} are those by

Baroczy, Chisholm, and Lombardi. The most accurate void fraction correlations are those of Smith, Premoli, and Chisholm, with the latter having the added advantage of great simplicity. A void fraction is sometimes expressed in terms of the slip ratio S^* (ratio of the phase velocity of the vapor to that of the liquid):

$$S^* = \left(\frac{x}{1-x}\right)\left(\frac{\rho_g}{\rho_f}\right)\left(\frac{1-\alpha}{\alpha}\right) \tag{B8.74}$$

Baroczy's correlation is widely used in the United States.[30] This correlation may be considered an extension of that of Lockhart and Martinelli, and of Martinelli and Nelson.[29] Baroczy[31] used experimental data in adiabatic conditions where the acceleration pressure drop is zero (the acceleration pressure drop is important in a case of heated channels) and where the gravity pressure drop is either zero (horizontal lines) or could be neglected. This correlation is given in two sets of curves:

1. A plot of the two-phase multiplier Φ^2_{LO} as a function of the property index PI for a fixed mass flux of 10^6 $\mathrm{lb_m/(ft^2 \cdot h)}$ [1356 $\mathrm{kg/(m^2 \cdot s)}$], as shown in Fig. B8.38, where:

$$\mathrm{PI} = \frac{(\mu_f/\mu_g)^{0.2}}{\rho_f/\rho_g} \tag{B8.75}$$

2. Plots of a correction factor for mass velocity effects, Ω, as a function of the property index and mass flux, are shown in Fig. B8.39. This correction factor multiplies Φ^2_{LO} whenever $\dot{G}$ deviates from 10^6 $\mathrm{lb/(ft^2 \cdot h)}$ [1356 $\mathrm{kg/(m^2 \cdot s)}$]. Baroczy's correction factor for mass velocity effects varies with mass flux in a rather peculiar manner. Since several investigators have observed changes in pressure-drop behavior characteristics with flow regime, these variations may be related to flow pattern changes.

Baroczy compared his correlation method with experimental data for water-air, water-steam, and other liquids including liquid metals, organic oils, and so forth over a wide range of conditions and found the agreement good.

Critical Gas-Liquid Flow ("Flashing" Flow)

General Remarks. Critical or mass-limiting flow is characteristic of compressible fluid systems. In two-phase flow, a maximum or critical flow rate is also observed. When fluid travels in a horizontal pipeline its pressure decreases until it reaches the pipe exit. If a liquid in the upstream vessel is near the boiling point, its pressure in the pipeline may drop below the saturation point, resulting in vapor formation (*flashing*). Therefore, two-phase flow may occur starting from a certain cross section in the line. There are cases where fluid entering the pipe may already be a liquid-vapor mixture. If the pressure in the downstream receiver is reduced sufficiently to cause the flow velocity at the pipe exit to equal that of the speed of sound at local fluid conditions, the mass flow rate reaches its maximum value, and the flow is said to be *choked.* The maximum flow rate at the choke point is called *critical flow rate.*

At the present, there is no general model or correlation for critical two-phase flow that is valid for a wide range of pipe lengths, pipe diameters, and upstream conditions including subcooled liquid. For these reasons, different models may be

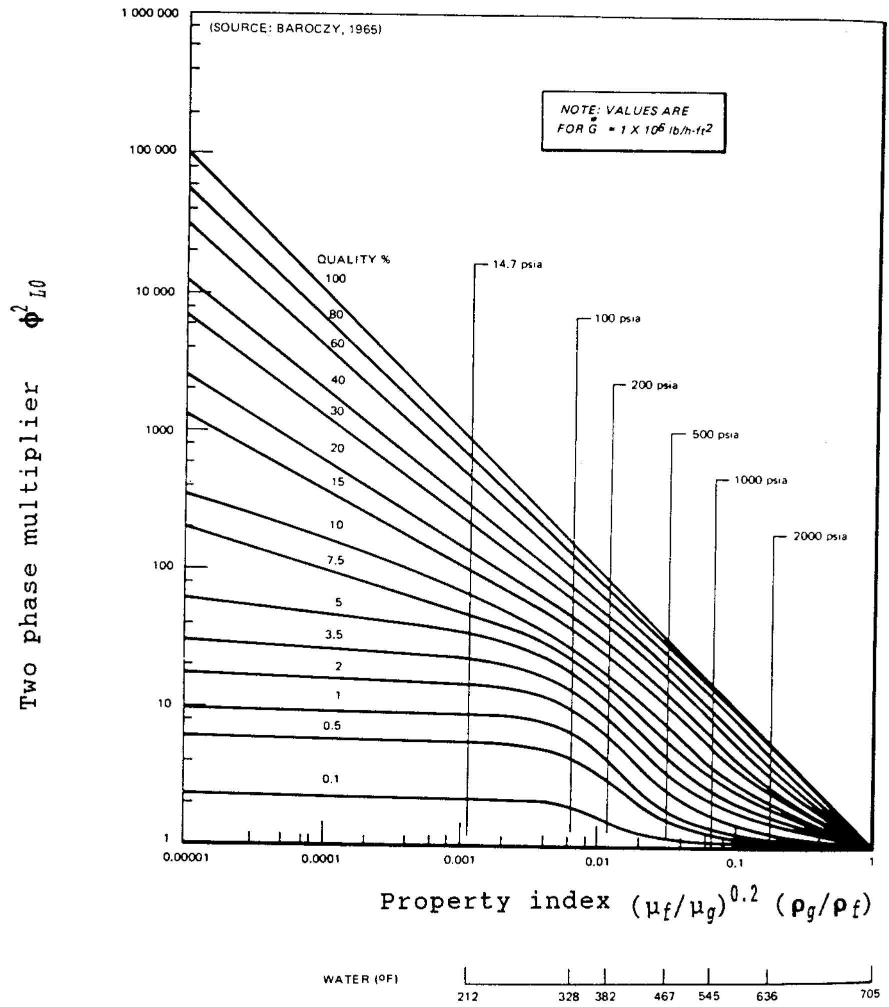

FIGURE B8.38 Baroczy frictional pressure drop correlation for $\dot{G} = 1 \times 10^6$ $\mathrm{lb_m/(ft^2 \cdot h)}$; (1356 $\mathrm{kg/(m^2 \cdot s)}$). (*From Ref. 31.*)

more appropriate for designing specific two-phase flow discharge systems. The most frequently used models and calculation procedures are described in the following subsections.

Fanno Model (Thermal Equilibrium, Homogeneous). All homogeneous-equilibrium models are based on three assumptions:

1. There is no slip between phases.
2. There is thermodynamic equilibrium between the liquid and vapor at all times.

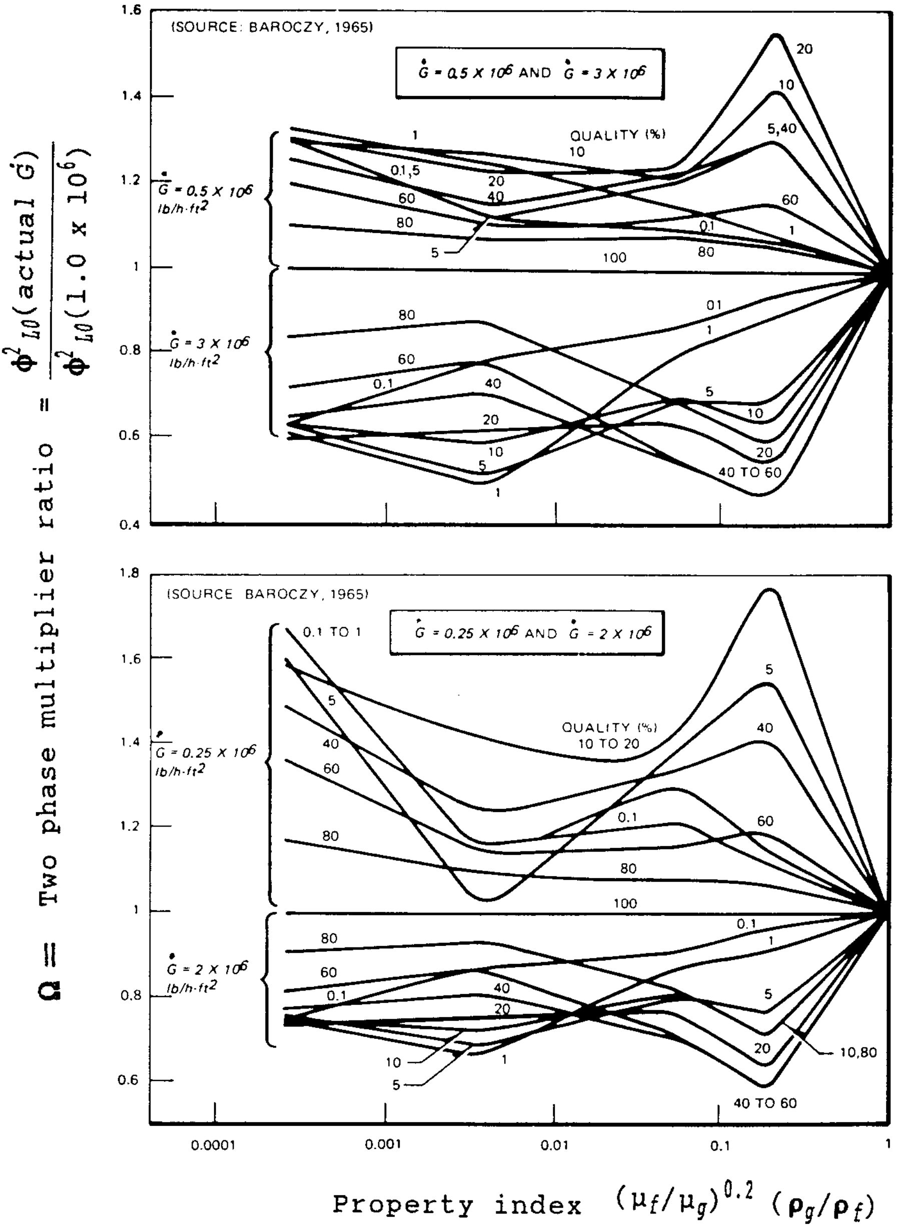

FIGURE B8.39 Baroczy correction factor for mass velocity effects. (*From Ref. 31.*)

3. The specific volume is calculated from equation

$$v = v_f + x(v_g - v_f) \tag{B8.76}$$

Equation (B8.22) represents the Fanno line[10,32] for a single-phase compressible flow, as a locus of conditions in a pipe of constant diameter. Having fixed w_1 and h_1 at the starting point, the stagnation enthalpy h_0 can be calculated. This stagnation enthalpy is constant along the length L of the pipe.

For the two-phase (wet steam) region the following expressions hold

$$h = h_f + h_{fg} \tag{B8.77}$$

$$v = v_f + xv_{fg} \tag{B8.78}$$

$$s = s_f + xs_{fg} \tag{B8.79}$$

From Eqs. (B8.22), (B8.77), and (B8.78), the following is found[32]:

$$x^2 + 2x\left[\frac{v_f}{v_{fg}} + Jg_c\left(\frac{A}{\dot{m}}\right)^2 \frac{h_{fg}}{v_{fg}^2}\right]_x + \frac{(v_f^2)_x - v_1^2 + 2Jg_c\left(\frac{A}{\dot{m}}\right)^2 [(h_f)_x - h_1]}{(v_{fg}^2)_x} = 0 \tag{B8.80}$$

Choosing a set of temperatures (or corresponding saturation pressures) below T_1, the appropriate values of h_f, h_g, v_f, v_g are calculated by using steam tables.[5] Then, solving Eq. (B8.80) for each pressure, the corresponding steam quality x is computed. Each intersection of corresponding x and p values represents the Fanno line point on the h-s diagram. The choked condition at the pipe exit is defined by maximum entropy:

$$\frac{ds}{dh} = 0 \tag{B8.81}$$

The detailed calculation procedures for finding the static pressure p_L at the distance L from the choked exit is the same as described in the subection ''Adiabatic, Constant-Area Flow with Friction.''

Allen Model (Thermal Equilibrium, Homogeneous). Neglecting potential energy (elevation term), Eq. (B8.11) applied to the one-dimensional, steady-state flow in a channel (no technical work), per unit mass, becomes

$$d\left(\frac{w^2}{2g_c}\right) = -vdp - d'w_f \tag{B8.82}$$

By using the differential form of the D'Arcy-Weisbach equation for work done against fluid friction

$$d'w_f = f\frac{w^2}{2g_c}\frac{dL}{D} \tag{B8.83}$$

and the differential form of the continuity equation (B8.21)

$$dw = \left(\frac{\dot{m}}{A}\right) dv \tag{B8.84}$$

the following result is found[33]:

$$vdp + \left(\frac{\dot{m}}{A}\right)^2 \left(\frac{vdv}{g_c} + \frac{fv^2}{2g_c D} dL\right) = 0 \tag{B8.85}$$

Dividing Eq. (B8.85) by v^2 and integrating between locations 1 and x along the pipe, it follows that

$$\left(\frac{\dot{m}}{A}\right)^2 = g_c \frac{\int_{p_1}^{p_x} -\frac{dp}{v}}{\ln \frac{v_x}{v_1} + \frac{fL}{2D}} \tag{B8.86}$$

A similar equation is presented in the paper by Benjamin-Miller.[34]

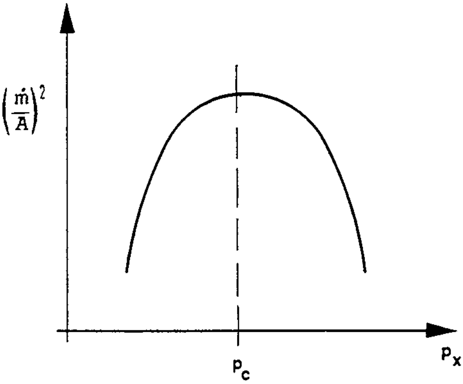

FIGURE B8.40 Function $(\dot{m}/A)^2$ versus pressure.

The function $(\dot{m}/A)^2$ has its maximum value at choked pressure $p_x = p_c$ as illustrated in Fig. B8.40. For a given pipe diameter and piping layout (equivalent length L) the choked pressure may be calculated by assuming a friction factor and evaluating the integral numerically by taking small pressure increments and summing the values $\Delta p/\bar{v}$, where $\bar{v}$ is the average specific volume within the chosen Δp limits.

To evaluate the average specific volume, the Benjamin-Miller method assumes isentropic expansion between pressures p_{x-1} and p_x, while the Allen method assumes isenthalpic expansion between those pressures. Allen suggests in his paper that the difference in specific volume, whether isenthalpic or isentropic expansion is used, will not be large.

Allen found a simple relationship between critical pressure, initial pressure, and the rate of flow:

$$p_c = \frac{\dot{m}}{A} C_A p_1 \tag{B8.87}$$

where

$$C_A = \left[\frac{1}{g_c}\left(\frac{h_{f_1} - h_{f_2}}{p_1 - p_2}\right)\left(\frac{2v_{fg1}}{h_{fg1} + h_{fg2}}\right)\right]^{1/2} \tag{B8.88}$$

In computing the constant C_A, the subscript 1 refers to saturation conditions at the source (say drain cooler exit) temperature, and the subscript 2 refers to saturation conditions an infinitely small amount below this temperature. Practically, a finite interval of one degree less than the temperature at drain cooler exit is recommended for use.

For a given stagnation enthalpy in the upstream source, and for a given mass flux $\dot{m}/A$, the corresponding pipe exit critical pressure may be found using Fig. B8.41.

In order to apply Eq. (B8.86) for finding the pressure at the outlet of the control valve, or at any distance L from choked pipe exit, the value p_x should be replaced by the calculated critical pressure p_c, and Eq. (B8.86) must be solved by trial for $p_1 = p_L$ [convergence on the lower limit of the integral in Eq. (B8.86)].

Allen succeeded in writing Eq. (B8.86) in terms of a single variable by expressing the specific volume of a mixture in terms of pressure. See Ref. 33 for more details.

Note: 1 $\text{lb}_\text{m}/(\text{ft}^2 \cdot \text{s}) = 4.88\ \text{kg}/(\text{m}^2 \cdot \text{s})$

For pressure and enthalpy conversions to SI units see Tables B8.1 and B8.3.

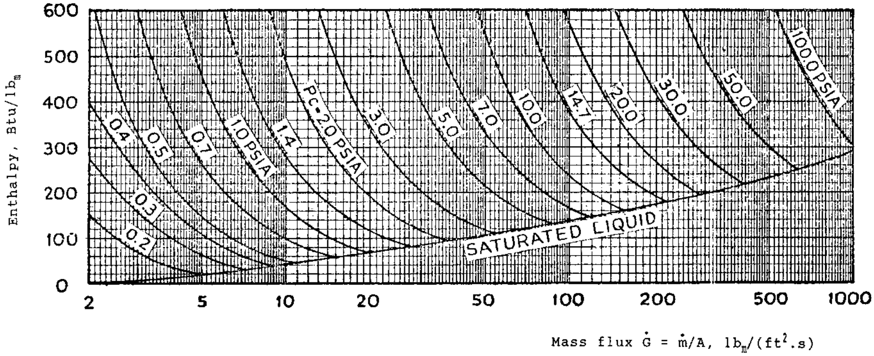

FIGURE B8.41 Pipe exit critical pressures for water-steam mixtures (*Allen Model.*)

Moody Model (Thermal Equilibrium, Nonhomogeneous). Moody considers isentropic expansion of a homogeneous fluid in a converging nozzle (Fig. B8.25). The nozzle may be considered as a pipe of diameter D_2 and length $L = 0$.[35] The two-phase flow pattern at the exit is annular with no entrainment, but the exit velocities of each phase may differ, resulting in an exit slip ratio.

The Moody model is based on the same logic as described for the previous homogeneous models, the only difference being that average vapor velocity and average liquid velocity are not equal (nonhomogeneous annular flow). Moody developed the following expression for $\dot{G}$:

$$\dot{G} = \sqrt{\frac{2Jg_c\left[h_0 - h_f - \frac{h_{fg}}{s_{fg}}(s_0 - s_f)\right]_2}{\left[\frac{S^*(s_g - s_0)v_f}{s_{fg}} + \frac{(s_0 - s_f)v_g}{s_{fg}}\right]_2^2 \left[\frac{s_0 - s_f}{s_{fg}} + \frac{s_g - s_0}{(S^*)^2 s_{fg}}\right]_2^2}} \tag{B8.89}$$

Equation (B8.89) shows that $\dot{G}$ is a function of S^* and p_2 when h_0 and s_0 are known (upstream stagnation properties). The following expression for slip ratio S^* at the maximum flow rate was found:

$$S^* = S_2^* = \left(\frac{v_g}{v_f}\right)_2^{1/3} \tag{B8.90}$$

which indicates that S^* is the function of p_2 only. Then, for known h_0 and s_0, a maximum (choke) value of $\dot{G}_c$ is derived from the relation:

$$\frac{d\dot{G}}{dp_2} = 0 \tag{B8.91}$$

The shape of the $\dot{G}(p_2)$ function is similar to that for homogeneous flow (Fig. B8.26). Exit properties for maximum steam/water discharges $\dot{G}_c$, associated with stagnation enthalpies h_0, are shown in Fig. B8.42.

Mass flux ($\dot{G} = \dot{m}/A$) conversion : 1 $\text{lb}_m/(\text{ft}^2 \cdot \text{s}) = 4.88\ \text{kg}/(\text{m}^2 \cdot \text{s})$
For pressure and enthalpy conversions to SI units see Tables B8.1 and B8.3.

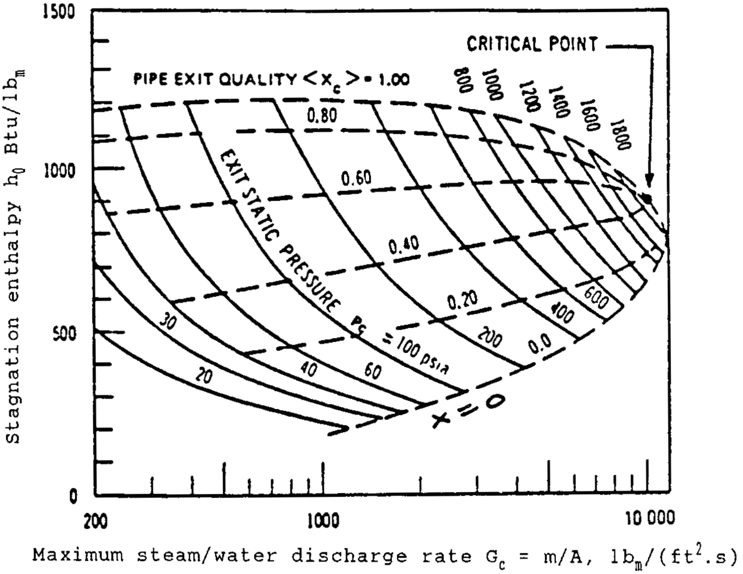

FIGURE B8.42 Exit properties for maximum steam/water discharges (*Moody Model*, from Ref. 29.)

Mass flux ($\dot{G} = \dot{m}/A$) conversion : 1 $lb_m/(ft^2 \cdot s)$ = 4.88 $kg/(m^2 \cdot s)$
For pressure and enthalpy conversions to SI units see Tables B8.1 and B8.3.

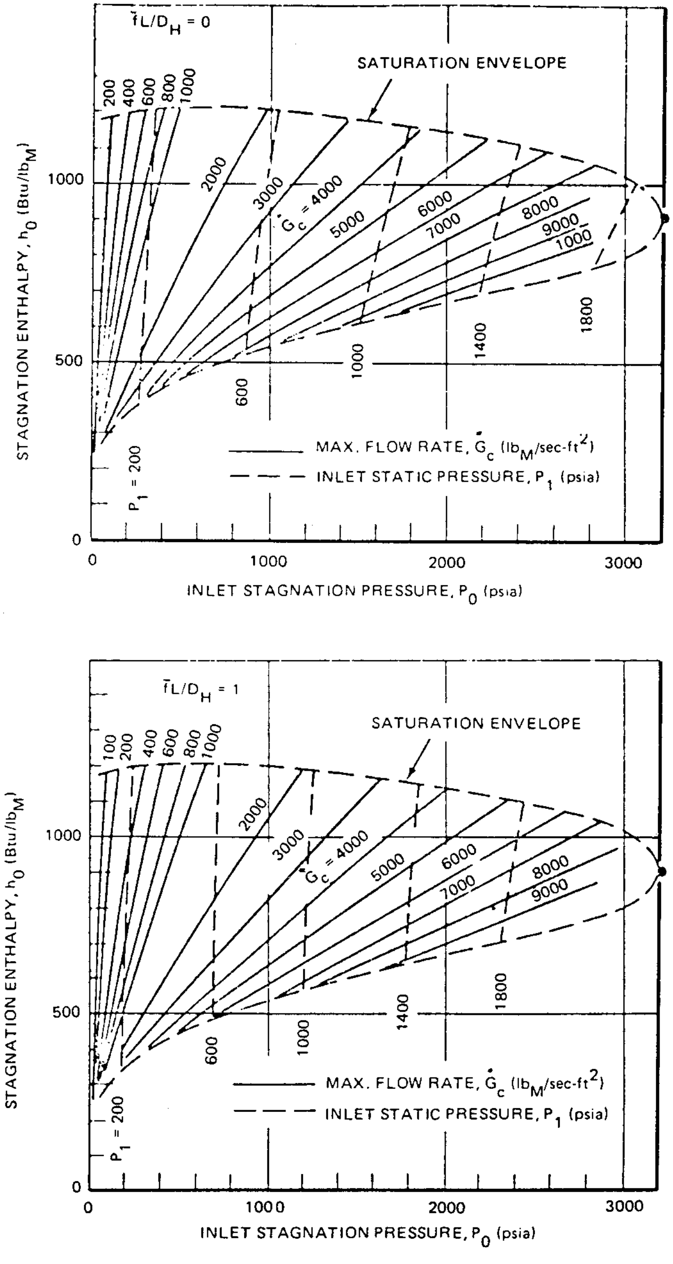

FIGURE B8.43 Pipe maximum steam/water discharge rates (*Moody Model, from Ref. 29.*)

Mass flux ($\dot{G} = \dot{m}/A$) conversion : 1 $\text{lb}_\text{m}/(\text{ft}^2 \cdot \text{s}) = 4.88\ \text{kg}/(\text{m}^2 \cdot \text{s})$
For pressure and enthalpy conversions to SI units see Tables B8.1 and B8.3.

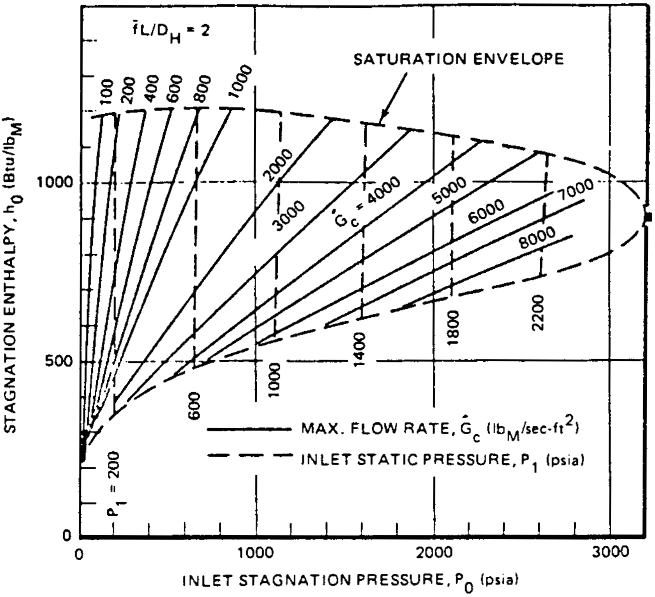

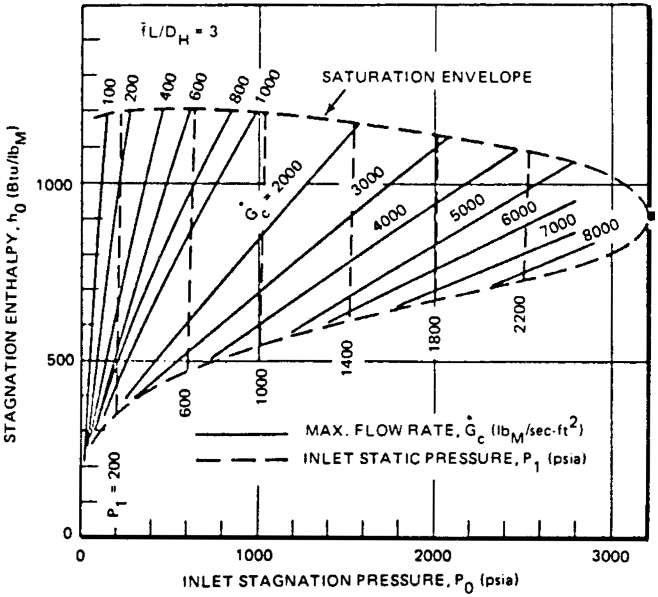

FIGURE B8.43 (*Continued*)

Mass flux ($\dot{G} = \dot{m}/A$) conversion : 1 $lb_m/(ft^2 \cdot s) = 4.88\ kg/(m^2 \cdot s)$
For pressure and enthalpy conversions to SI units see Tables B8.1 and B8.3.

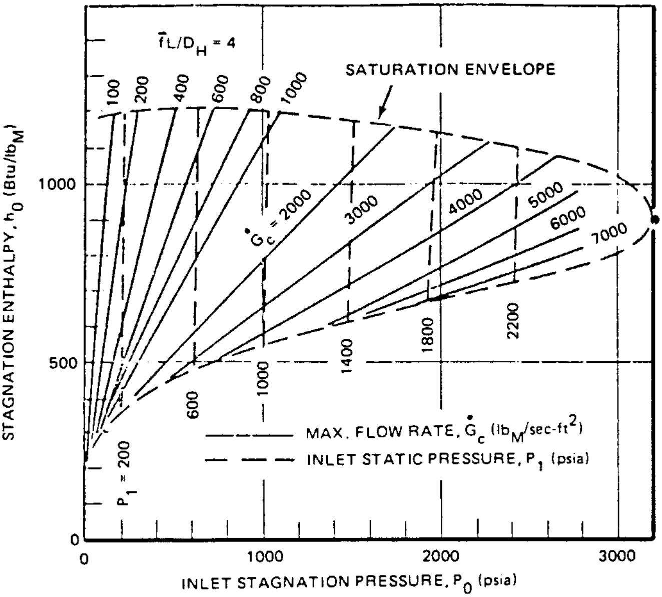

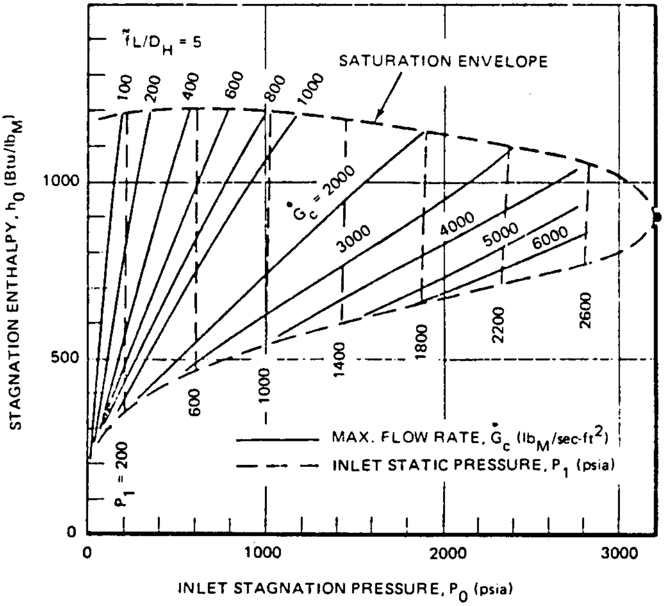

FIGURE B8.43 (*Continued*)

Mass flux ($\dot{G} = \dot{m}/A$) conversion : 1 $\text{lb}_m/(\text{ft}^2 \cdot \text{s}) = 4.88\ \text{kg}/(\text{m}^2 \cdot \text{s})$
For pressure and enthalpy conversions to SI units see Tables B8.1 and B8.3.

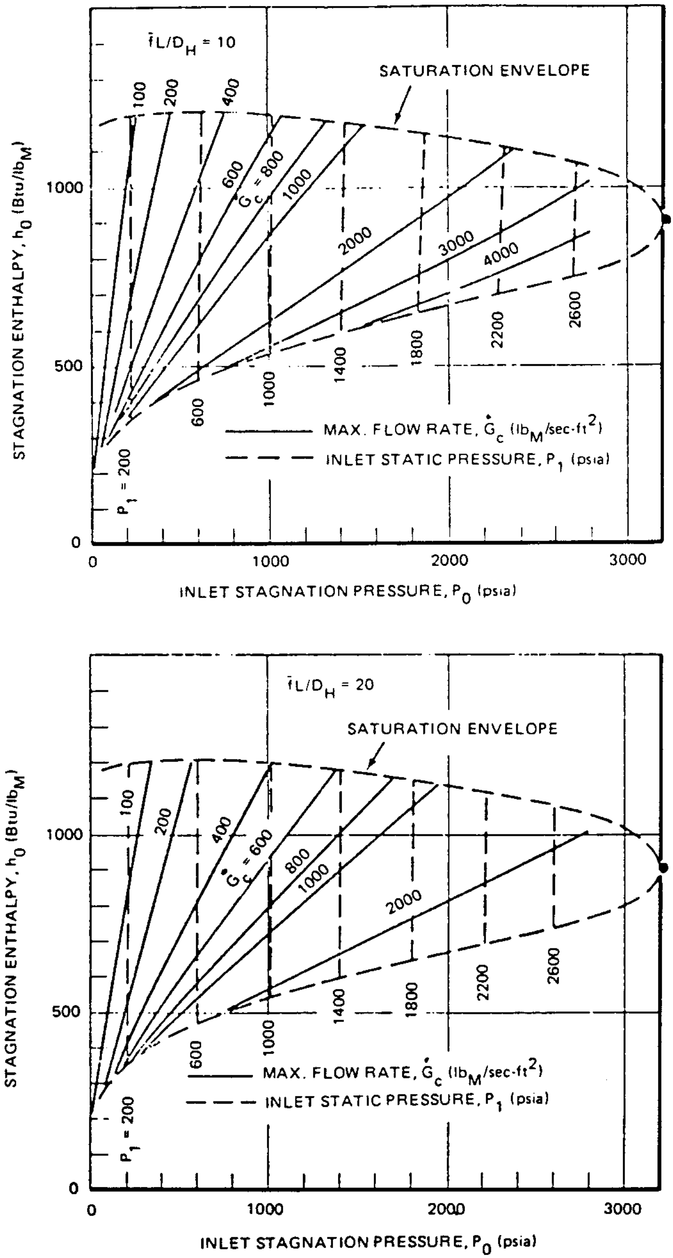

FIGURE B8.43 (*Continued*)

Mass flux ($\dot{G} = \dot{m}/A$) conversion : 1 $lb_m/(ft^2 \cdot s)$ = 4.88 $kg/(m^2 \cdot s)$
For pressure and enthalpy conversions to SI units see Tables B8.1 and B8.3.

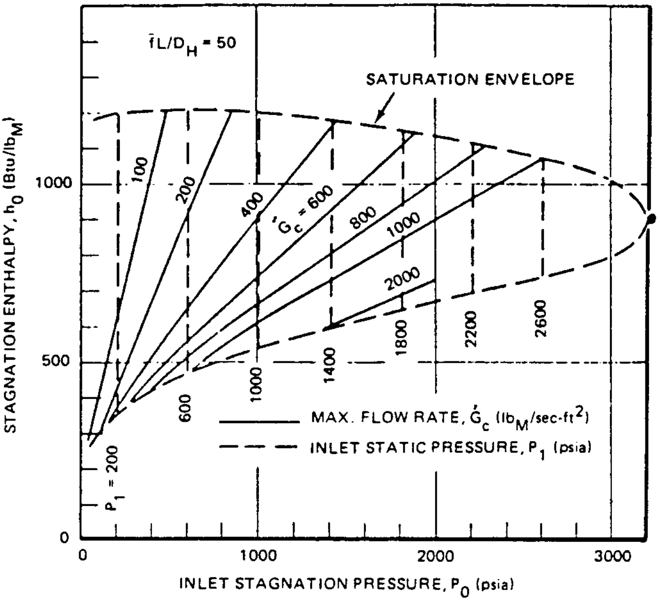

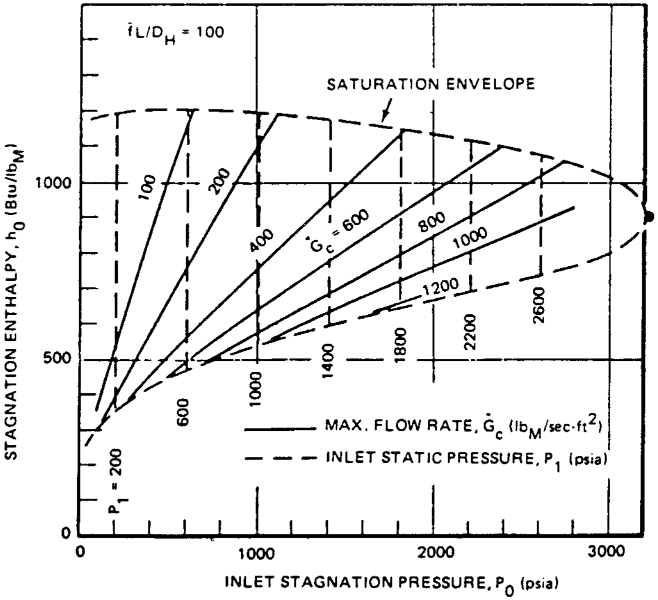

FIGURE B8.43 (*Continued*)

The thermal parameters of the fluid at a distance L from the choked pipe exit are found in a similar way to what is described earlier in the section "Adiabatic, Constant-Area Flow with Friction." Computer solution of numerical integration of equations developed in Ref. 36 leads to graphs expressing the relation between the maximum (critical) two-phase discharge rate $\dot{G}_c$ from uniform pipes and the stagnation pressure p_0, the initial static pressure p_1, the fluid enthalpy h_1, and the pipe characteristics described by $\bar{f}\ L/D_H$. They are presented in Fig. B8.43 (taken from Ref. 29). Here $\bar{f}$ is the average D'Arcy-Weisbach friction factor calculated for the average liquid Reynolds number; L is the pipe length upstream from the choked exit; and $D_H = 4\ A/(\text{wetted perimeter})$ is a characteristic linear dimension (for flows in pipes of circular diameter it is equal to the pipe diameter).

References 35, 36, and 37 should be consulted for additional information concerning the development of the Moody Model.

Henry-Fauske Model (Nonequilibrium, Nonhomogeneous). The Henry-Fauske model[38] is of importance for choked two-phase flow through short pipes, nozzles, and orifices, where the fluid transit is short and thermodynamic equilibrium between phases cannot be reached. Since the phases have different densities, the pressure gradient will also tend to accelerate the lighter vapor phase more than the liquid. It is assumed in this model that at throat the actual fluid quality may be determined by introducing a nonequilibrium parameter N.

For a given stagnation condition of p_0 and x_0, the model predicts both the critical (choke) pressure and the flow rate. The theory is extended to subcooled inlet conditions. The calculated mass fluxes $\dot{G}_{\max}$ corresponding to initial stagnation conditions p_0, h_0, in the wet steam and subcooled liquid regions, are presented in Figs. B8.44 and B8.45 (based on Ref. 30). The figures indicate how the max flux $\dot{G}_{\max}$ increases with increased pressure p_0, holding the stagnation enthalpy at the same level [say 500 Btu/lb$_\text{m}$ (1163 kJ/kg)]. Steep stagnation pressure lines, especially those below 1100 psia (6.89 bar), in Fig. B8.44 indicate extreme sensitivity to the fluid enthalpy in determining the mass fluxes at low qualities, near the saturation line $x = 0$. Therefore, a very careful estimation of stagnation conditions ahead of a valve, as well as the computerized Henry-Fauske model are helpful in predicting reasonable values of mass fluxes in this wet-steam region. It is the responsibility of the designer to ensure that his or her evaluation yields conservative results.

For a specified inlet stagnation enthalpy h_0 and different stagnation pressures p_0, the values of $\dot{G}_{\max} = (\dot{m}/A)_{\max}$ and the corresponding choke pressures p_c can be found, as they are presented in a sample calculation (Table B8.16 and Fig. B8.46) performed by using a computer program.

The Henry-Fauske theory was developed for two-phase critical discharge of single-component mixture through convergent nozzles. Because the orifices (e.g., valve orifices) cannot be considered as nozzles, a discharge coefficient of 0.84, as recommended in Ref. 37, should be applied. More information on this subject may be found in Ref. 39.

Comparison of Results Generated by Different Models. As mentioned in the section "General Remarks," there is no general model for two-phase critical flow that is valid for all cases of interest. Each model is only applicable for a limited range of parameters. The number of critical flow models available may cause some apprehension when the task of selecting one is approached.

In order to facilitate the selection of an appropriate model for a given problem, some useful graphs are presented in this subsection. Figures B8.47 and B8.48 show the critical (choke) pressure versus stagnation enthalpy for the mass fluxes of 50

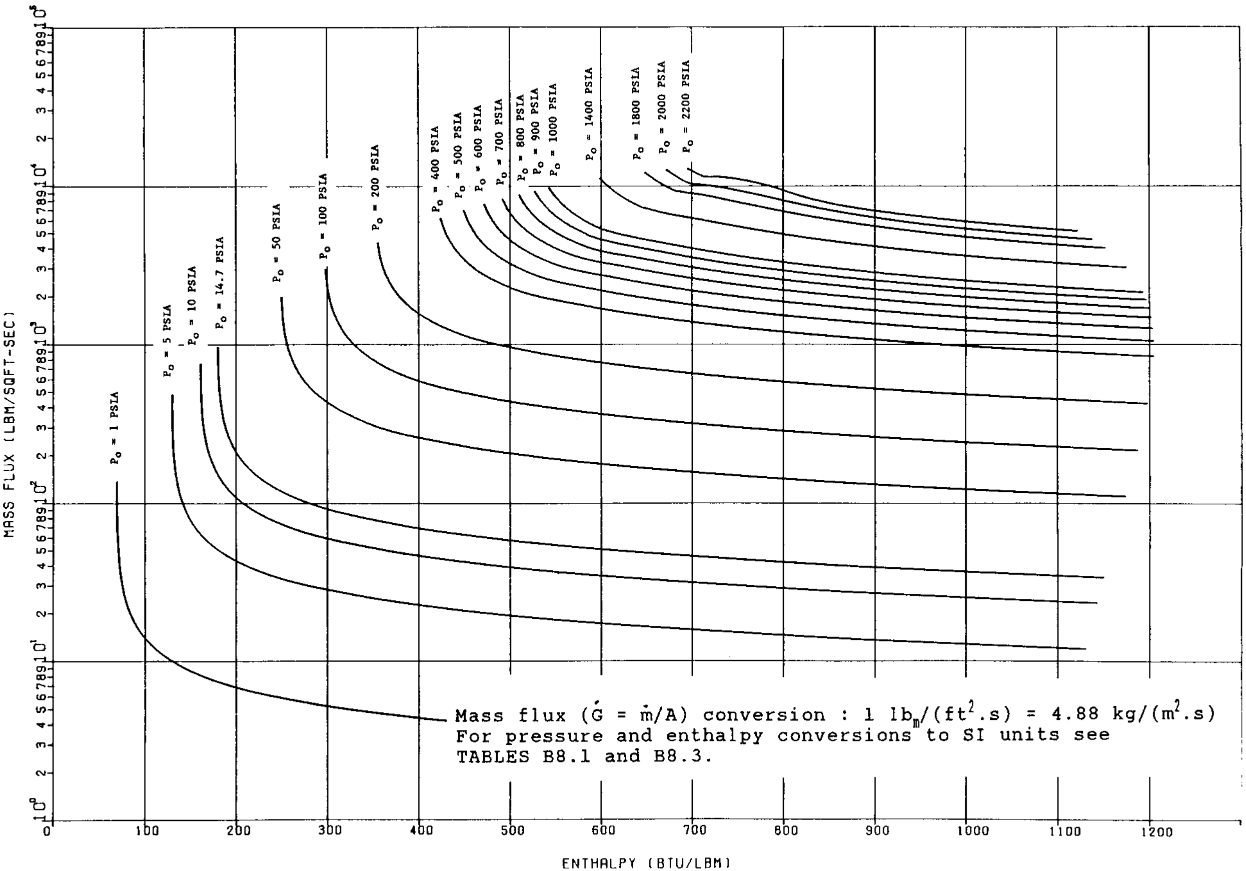

Mass flux ($\acute{G} = \dot{m}/A$) conversion : 1 $lb_m/(ft^2.s)$ = 4.88 $kg/(m^2.s)$
For pressure and enthalpy conversions to SI units see TABLES B8.1 and B8.3.

FIGURE B8.44 Two-phase critical flow (*Henry-Fauske Model; data from Ref. 30.*)

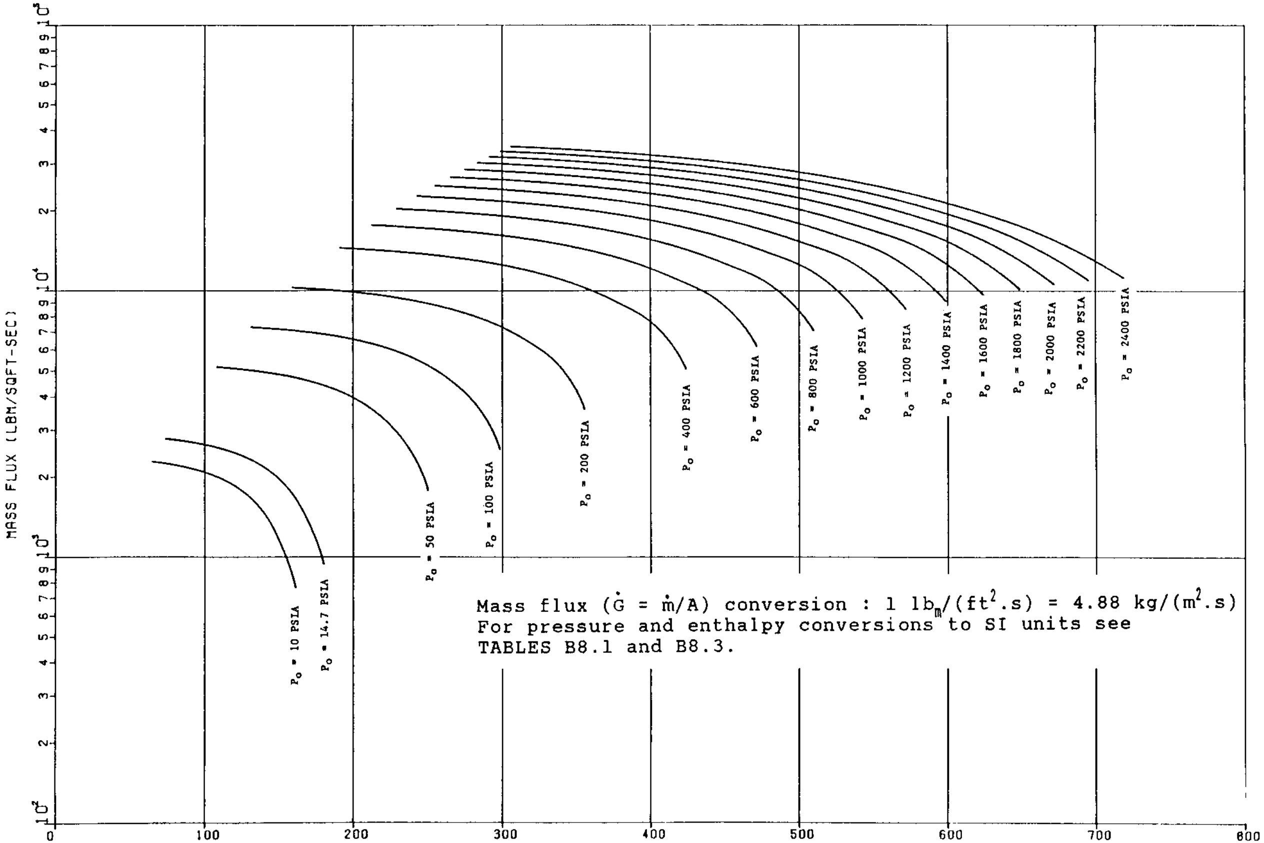

Mass flux ($\dot{G} = \dot{m}/A$) conversion : 1 $lb_m/(ft^2.s)$ = 4.88 $kg/(m^2.s)$
For pressure and enthalpy conversions to SI units see
TABLES B8.1 and B8.3.

FIGURE B8.45 Subcooled critical flow (*Henry-Fauske Model; data from Ref. 30.*)

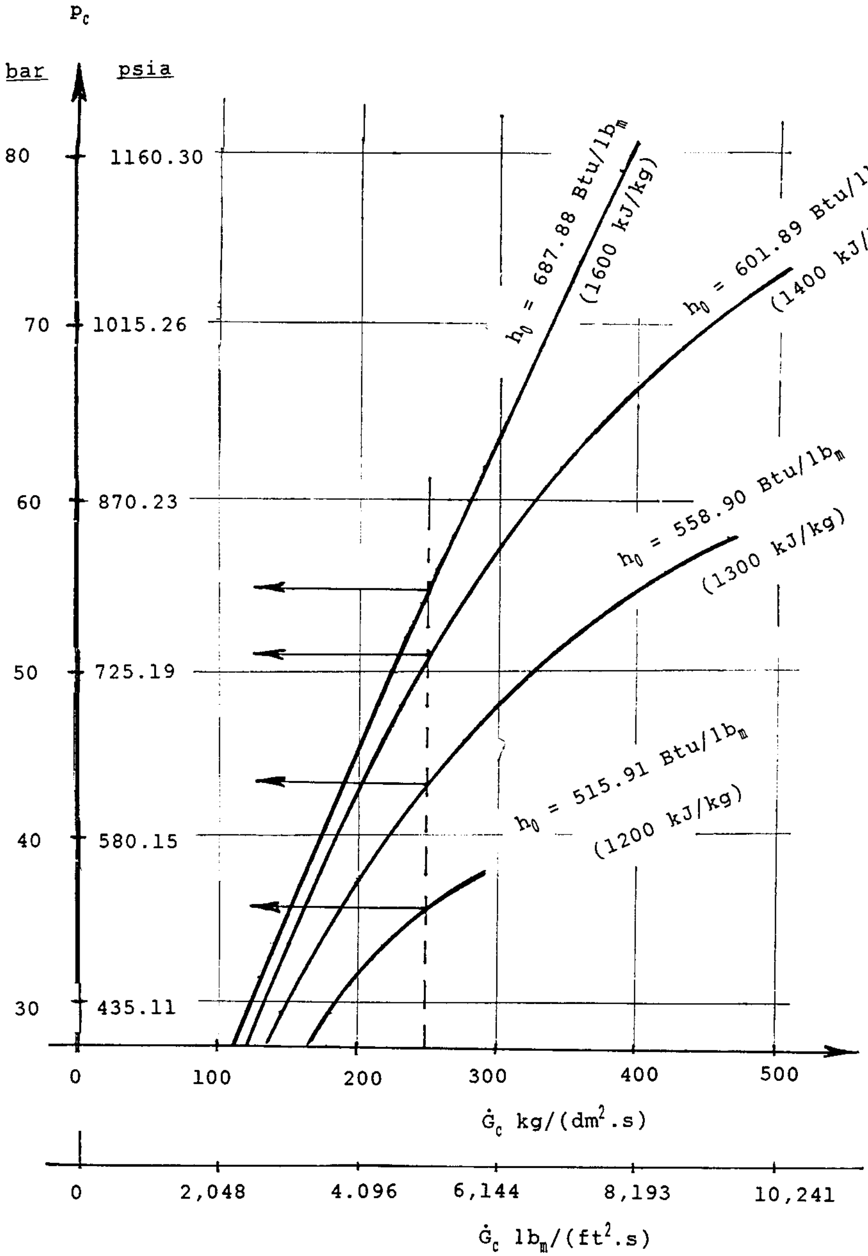

FIGURE B8.46 Critical two-phase flow by Henry-Fauske. (*Line for h_0 = 1400 kJ/kg, based on results from Table B8.16.*)

TABLE B8.16 Computer Printout for Nozzle Inlet Stagnation Enthalpy $h_0 = 687.88$ Btu/lb$_m$ (1400 kJ/kg) and Various Inlet Pressures p_0 (PZERO). Here: $\dot{G}_{max}$ = GMAX, p_C = PC

```
HENRY-FAUSKE 2-PHASE CRITICAL FLOW

                        HZERO = 1400.00  kJ/kg
                        ======================

             PZERO                GMAX                 PC

              bar              kg/(dm2.s)              bar
        ----------------------------------------------------

              95.000             502.881             73.694
              90.000             437.758             69.825
              85.000             384.717             65.869
              80.000             340.122             61.855
              75.000             301.699             57.806
              70.000             267.947             53.740
              65.000             239.840             49.304
              60.000             215.553             44.587
              50.000             169.878             35.748
              40.000             128.020             27.651
              30.000              90.228             20.150
              20.000              56.349             13.121
              10.000              26.227              6.445
               5.000              12.579              3.206
               2.000               4.883              1.283
```

NOTE: 1 kg/(dm^2.s) = 0.01 kg/(m^2.s) = 20.48 lb$_m$/(ft^2.s)
For pressure, and enthalpy conversions to other units see TABLES B8.1 and B8.3.

lb$_m$/(ft$^2 \cdot$ s) [244.12 kg/(m$^2 \cdot$ s)] and 600 lb$_m$/(ft$^2 \cdot$ s) [2929.46 kg/(m$^2 \cdot$ s)]. The curves marked by *F, A, M,* and *H-F* represent the values corresponding to the following models respectively, Fanno, Allen, Moody, and Henry-Fauske. Figures B8.49 to B8.52[40] represent a comparison of critical flow rates predicted by various models and their relations to experimental data (also see Ref. 37 and 38 on this subject). The following conclusions can therefore be made:

1. A homogeneous equilibrium theory (Fanno model, Benjamin-Miller model, Allen model) may be used to predict critical flow rates from long pipes ($L/D \geq 40$). This theory provides a lower bound to all presented experimental data. It is generally recognized, however, that this theory underestimates the choked mass flux at low pressures and qualities. As the pressures and qualities increase, the accuracy of the answer improves.[41]
2. The Moody model predicts flow rates higher than those observed for stagnation qualities above 0.01; thus being conservative, it is recommended for U.S. water-reactor licensing calculations (e.g., loss-of-coolant accident—LOCA). It should be explained here that the computer program RELAP4/MOD5[30] is a part of the Nuclear Regulatory Commission's (NRC) water reactor evaluation model

Mass flux ($\dot{G} = \dot{m}/A$) conversion : 1 $lb_m/(ft^2 \cdot s)$ = 4.88 $kg/(m^2 \cdot s)$
For pressure and enthalpy conversions to SI units see Tables B8.1 and B8.3.

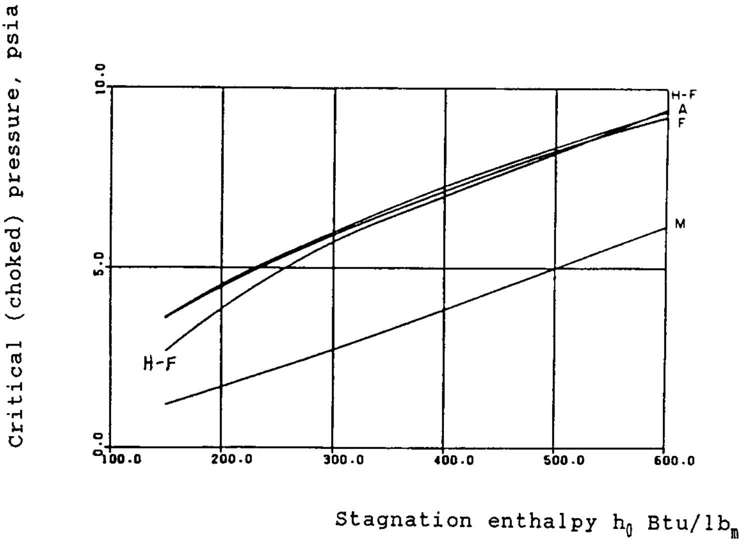

FIGURE B8.47 Predicted critical pressure versus stagnation enthalpy. Mass flux = 50 $lb_m/(ft^2 \cdot s)$. (*Stone & Webster data.*)

Mass flux ($\dot{G} = \dot{m}/A$) conversion : 1 $lb_m/(ft^2 \cdot s)$ = 4.88 $kg/(m^2 \cdot s)$
For pressure and enthalpy conversions to SI units see Tables B8.1 and B8.3.

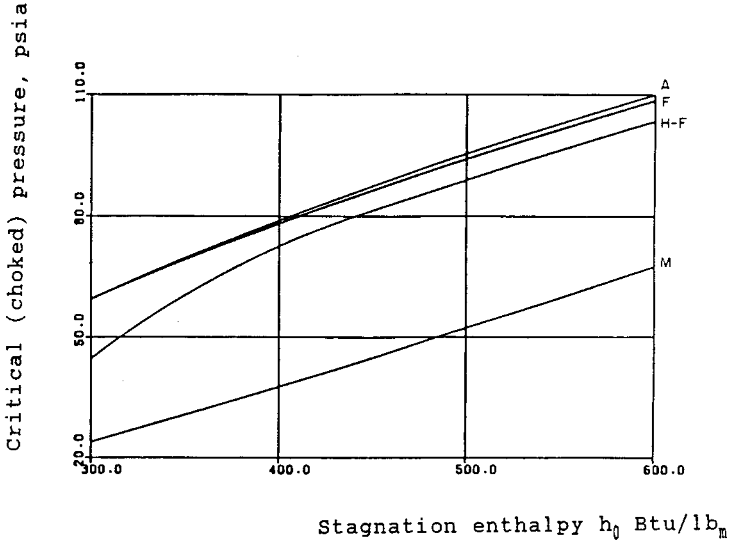

FIGURE B8.48 Predicted critical pressure versus stagnation enthalpy. Mass flux = 600 $lb_m/(ft^2 \cdot s)$ (*Stone & Webster data.*)

Mass flux ($\dot{G} = \dot{m}/A$) conversion : 1 $lb_m/(ft^2 \cdot s) = 4.88\ kg/(m^2 \cdot s)$
For pressure and enthalpy conversions to SI units see Tables B8.1 and B8.3.

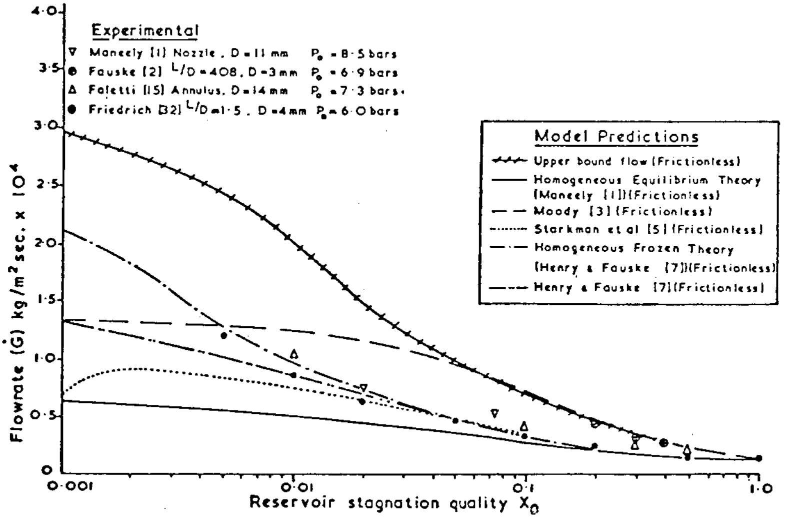

FIGURE B8.49 Comparison of critical flow models with data for p_0 = 100 psia (6.9 bar). (*From Ref. 40.*)

Mass flux ($\dot{G} = \dot{m}/A$) conversion : 1 $lb_m/(ft^2 \cdot s) = 4.88\ kg/(m^2 \cdot s)$
For pressure and enthalpy conversions to SI units see Tables B8.1 and B8.3.

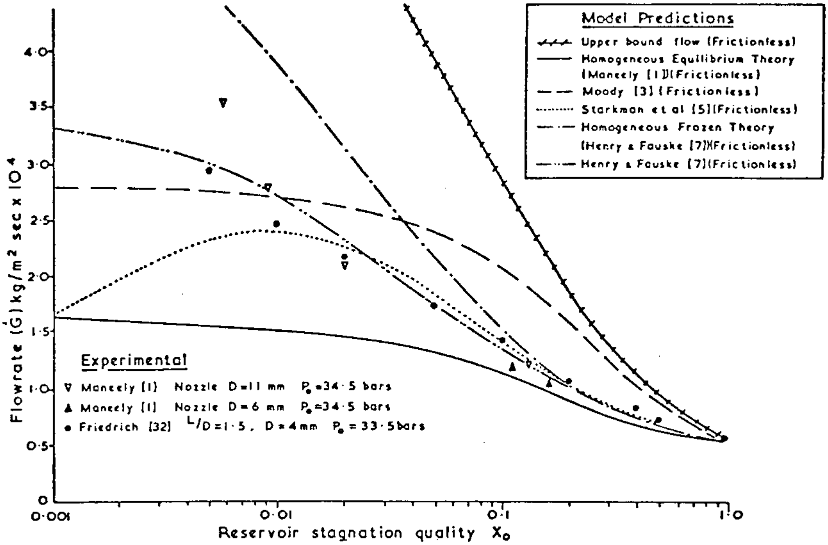

FIGURE B8.50 Comparison of critical flow models with data for p_0 = 500 psia (34.5 bar). (*From Ref. 40.*)

Mass flux ($\dot{G} = \dot{m}/A$) conversion : 1 $lb_m/(ft^2 \cdot s)$ = 4.88 $kg/(m^2 \cdot s)$
For pressure and enthalpy conversions to SI units see Tables B8.1 and B8.3.

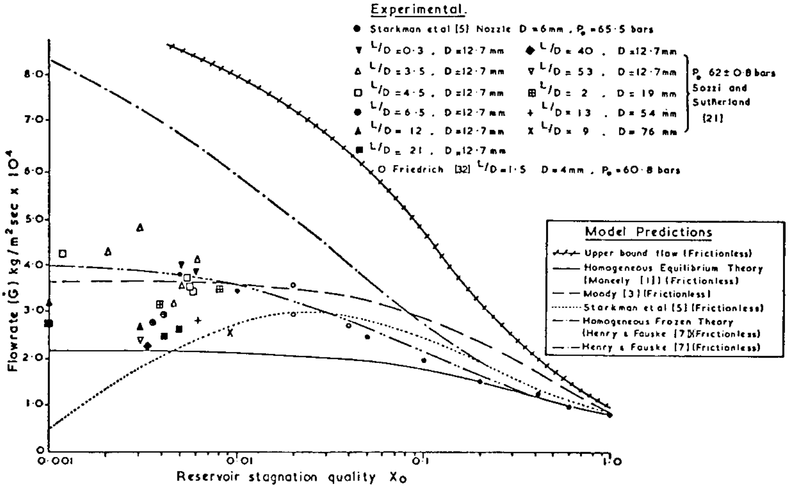

FIGURE B8.51 Comparison of critical flow models with data for p_0 = 900 psia (62 bar) (*From Ref. 40.*)

Mass flux ($\dot{G} = \dot{m}/A$) conversion : 1 $lb_m/(ft^2 \cdot s)$ = 4.88 $kg/(m^2 \cdot s)$
For pressure and enthalpy conversions to SI units see Tables B8.1 and B8.3.

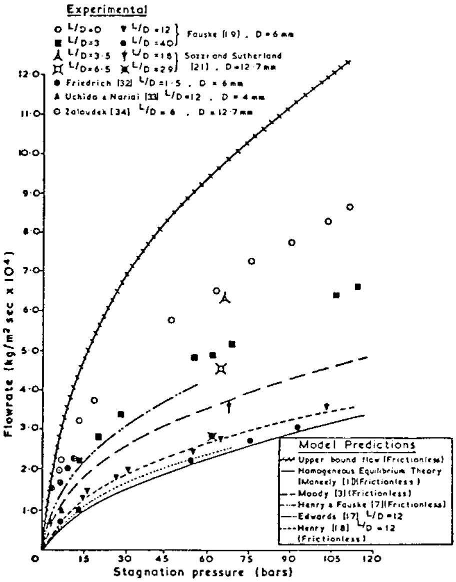

FIGURE B8.52 Discharge of saturated water through orifices, nozzles, and pipes. (*From Ref. 40.*)

(WREM). The critical flow model criterion of the WREM specifies use of the Henry-Fauske model in the subcooled region and the Moody critical flow model in the saturated region. To effect a smooth transition, therefore, the first point in the Moody critical flow tables has been placed in the last portion of the table for the Henry-Fauske critical flow model extended into the subcooled region. This limitation of the subcooled Henry-Fauske table should be realized during RELAP4 calculations.

3. The Henry-Fauske model is in reasonable agreement with short pipe ($L/D < 5$) and nozzle data for qualities greater than 0.001. Below this limit, however, agreement is less satisfactory, and the model underestimates the flow of saturated water through orifices by about 50 percent.

Applications

Design Considerations. Very often, severe problems can occur if slug flow is present in the pipeline. A number of circumstances will lead to the generation of slug flow. For instance, if an oil-gas mixture flows along a pipe on the seabed and then rises to a platform level up a vertical pipe, the liquid may collect upstream of the bend until it reaches a given level, at which point it is swept up the vertical leg, giving rise to mechanical problems in the platform equipment. In power plants, a similar phenomenon may occur in a pocketed line. Also, slug flow causes pressure fluctuations in piping, which can upset process conditions and cause inconsistent instrument sensing.

Existence of two-phase flow in a pipeline may also cause more severe fluid transient problems than occur in a single-phase condition. Should a two-phase flow condition be unavoidable in the system operation, the impact of two-phase flow transient condition should be taken into consideration in system design and piping support evaluation.

Slug flow can be avoided in piping by (1) reducing line sizes to the minimum permitted by available pressure differentials to achieve a safe mass flow rate, as indicated in Fig. B8.34; (2) designing for parallel pipe runs that will permit increasing mass flux per pipe at low load conditions by removing one pipe from service; or (3) arranging the pipe configurations to protect against slug flow (for example, in a pocketed line where liquid might collect and slug flow develop).

Slug flow will not occur in gravity-flow lines when appropriate venting is provided. Figure B8.53(*a*) shows a sketch of a non-self-venting gravity drain from a tank where the drain runs full; hence it requires a separate vent line. Figure B8.53(*b*) shows the typical design of a self-venting gravity drain which does not require a vent, but which usually has a separate vent line to maintain continuous drainage during plant transients. A hard-tee connection (i.e., flow through the branch) at a low point can provide sufficient turbulence for more effective liquid carryover. A diameter adjustment coupled with gas injection can also alter a slug-flow pattern to bubble or dispersed flow. Gas addition, however, when used solely to avoid slug flows, can be expensive.

The design of the transmission and distribution network for large district heating systems often represents more than half of the total investment cost and therefore is of vital importance to the economics of the system.[42] However, it must represent an optimized balance between economics and reliability of supplying heat to customers. From the distribution point of view, the temperature level of hot water in the district heating system should be as high as possible. The flow rates of hot water will then be reduced, the pipe sizes minimized, the pumping cost reduced, and

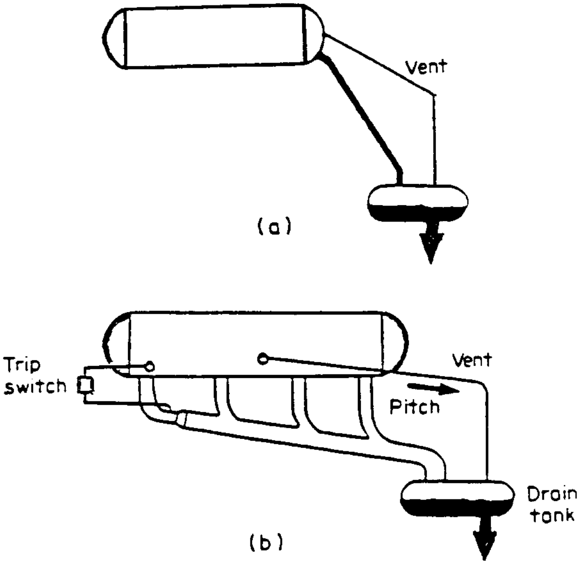

FIGURE B8.53 Drain system requirements: (*a*) design of non-self-venting gravity drains; (*b*) design of self-venting gravity drains.

the heat exchangers in the subscriber's substation will be smaller. The required temperature of the domestic water sets the minimum-possible supply temperature at 160 to 180°F (70 to 80°C). Pressure level at all points in the transmission and distribution network must always be so high that dangerous flashing or creating steam pockets will be avoided. The lowest-possible pressure in the system is therefore determined by the maximum hot water temperature and the minimum static head within the network (highest elevation).

Sample Problems B8.9 and B8.10

Sample Problem B8.9 (Self-venting line). To illustrate the design of a self-venting line, an example of calculating the diameter and minimum slope required to discharge 362,000 lb_m/h (164,200 kg/h) of 200°F (93.33°C) water (approximately 750 gpm) into a tank at ambient pressure is presented.

A properly designed drain line with gravity flow will be self-venting if the liquid Froude number (dimensionless parameter), Eq. (B8.69), is less than approximately 0.3[43]:

$$Fr = \frac{w_L}{\sqrt{gD}} \leq 0.3 \qquad (a)$$

where g = 32.174 ft/s^2 (9.80665 m/s^2) acceleration due to gravity
D = inside pipe diameter, ft (m)
w_L = velocity the liquid would have in the pipe flowing full with the given flow rate, ft/s (m/s)

$$w_L = \frac{(362{,}000\ \mathrm{lb_m/h})\ (0.016637\ \mathrm{ft^3/lb_m})}{(3{,}600\ \mathrm{s/h})\ (\pi D^2/4)}$$

$$w_L = \frac{2.131}{D^2} \qquad (b)$$

Substituting (*b*) into (*a*) yields:

$$0.3 \geq \frac{w_L}{\sqrt{gD}} \geq \frac{2.131}{D^2\sqrt{32.174D}}$$

or:

$D^{2.5} \geq 1.251$, and the diameter of the self-venting line should be

$D \geq 1.094$ ft $= 13.13$ in

Use 14-in Std. pipe; inside diameter $D = 13.25$ in

The minimum slope of a self-venting line may be calculated on the basis of an assumption of constant depth of water in the line. Assuming this depth to be $D/3$, the flow in a pipe may be considered as an open channel flow. The Chezy formula describes velocity in such a flow[1] as:

$$w = C_1\sqrt{r_h(SL)}\ \text{ft/s} \qquad (c)$$

where (SL) = slope of the pipe (channel), ft/ft
$r_h = A_L/O_H$ = hydraulic radius, ft (notice that for a full flow in pipe, $r_h = 0.25\ D$)
A_L = cross-sectional area of liquid in the channel, ft^2
O_H = wetted perimeter of the conduit (the portion of the perimeter where the wall is in contact with the fluid), ft
C_1 = Chezy coefficient

The Chezy coefficient C_1 is described by the widely accepted Manning formula[1]:

$$C_1 = 1.486\,\frac{r_h^{1/6}}{n} \qquad (d)$$

where $n \approx 0.014$ is the Manning roughness factor for a metal conduit.

Formula (*d*), however, must be modified in conjunction with the SI units, to obtain, for an identical input, the same results for the minimum slope *SL* in both systems of units, the SI and British (the coefficient 1.486 becomes 1.000).

The calculation of the hydraulic radius is performed as follows (see Fig. B8.54 and use geometry formulas from Ref. 44, typical):

For liquid depth ratio $h/D = ⅓$, the length of arc *K-N-M* subtended by θ

$$S_{K\text{-}N\text{-}M} = D\cos^{-1}\left(1 - \frac{h}{R_D}\right) = 1.2310D\ \text{ft}$$

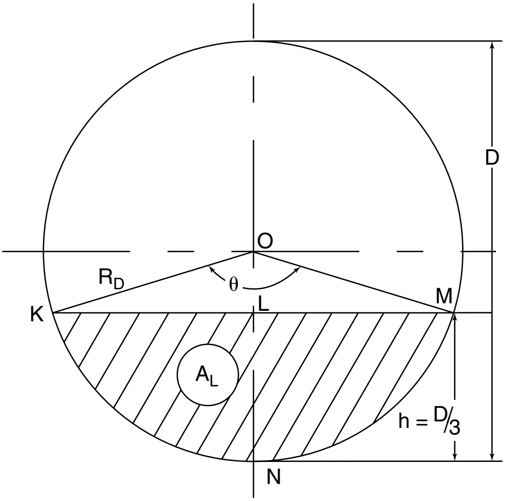

FIGURE B8.54 Cross-section geometry of a self-venting pipe.

the central angle in radians

$$\theta = \frac{S_{K\text{-}N\text{-}M}}{R_D} = \frac{(1.2310)D}{R_D} = (2)(1.2310) = 2.4619\text{ rad}$$

segment area A_L

$$A_L = \tfrac{1}{2}(\theta - \sin\theta)R_D^2$$

$$A_L = \tfrac{1}{2}(2.4619 - 0.6285)R_D^2 = 0.9167R_D^2 = 0.2794\text{ ft}^2$$

hydraulic radius

$$r_h = \frac{A_L}{S_{K\text{-}N\text{-}M}} = \frac{0.9167R_D^2}{(1.2310)(2)R_D} = 0.3723R_D = 0.2055\text{ ft}$$

Then, from (*d*), the Chezy coefficient is equal to:

$$C_1 = \frac{1.486}{0.014}(0.2055)^{1/6} = 81.54$$

The actual flow velocity of liquid in the self-venting line is found from the continuity equation

$$w = \frac{\dot{m}v}{A_L} = \frac{(362{,}000)(0.016637)}{(3600)(0.2794)} = 5.99\text{ ft/s}$$

Solving the Chezy equation (*c*) for the slope *SL* yields

$$(SL) = \frac{w^2}{C_1^2 r_h} = \frac{(5.99)^2}{(81.54)^2(0.2055)} = 0.0263\ \frac{\text{ft}}{\text{ft}} = 0.315\ \frac{\text{in}}{\text{ft}}\left(26.25\ \frac{\text{mm}}{\text{m}}\right)$$

Industrial experience[43] requires the minimum slope for a self-venting line to be not less than 0.5 in/ft (42 mm/m). Therefore, in the case of this problem, the minimum slope should be 0.5 in/ft (42 mm/m).

Sample Problem B8.10 (Fanno Model). Consider a refrigeration system filled with Freon-12. Boiling Freon at initial temperature $t_1 = 104°\text{F}$ (40°C) is being throttled in a capillary tube of 0.059 in (1.5 mm) internal diameter at the rate of 22.05 lb_m/hr (10 kg/h). Calculate the choke pressure and the velocity of the fluid at choked-line exit conditions. The properties of refrigerant R-12 are listed in Table B8.17.

Equations (B8.77) through (B8.80) are used to generate the following table. The procedure is explained by calculating results for a chosen Fanno line point at the temperature of 86°F (30°C) (one of those points in Table B8.18):

For saturated conditions at $t = 86°\text{F}$, from Table B8.17, the following is found:

$$\begin{aligned} p_{\text{sat}} &= 108.04 \text{ psia} \\ v_f &= 0.012396 \text{ ft}^3/\text{lb}_\text{m} \\ v_g &= 0.37657 \text{ ft}^3/\text{lb}_\text{m} \\ h_f &= 27.769 \text{ Btu/lb}_\text{m} \\ h_g &= 85.821 \text{ Btu/lb}_\text{m} \\ s_f &= 0.057301 \text{ Btu/(lb}_\text{m} \cdot °\text{R)} \\ s_g &= 0.16368 \text{ Btu/(lb}_\text{m} \cdot °\text{R)} \end{aligned}$$

In a similar way, for initial conditions (saturated *liquid* at $t_1 = 104°\text{F}$):

$$\begin{aligned} p_1 &= 139.33 \text{ psia} \\ h_1 &= 32.067 \text{ btu/lb}_\text{m} \\ v_1 &= 0.012783 \text{ ft}^3/\text{lb}_\text{m} \end{aligned}$$

Pipe cross-section area:

$$A = \frac{\pi}{4}\frac{(0.059)^2}{(12)^2} = 0.0000190 \text{ ft}^2$$

Mass flux:

$$\dot{G} = \frac{\dot{m}}{A} = \frac{22.05}{(3600)(0.0000190)} = 322.4\ \frac{\text{lb}_\text{m}}{(\text{ft}^2 \cdot \text{s})}$$

Equation (B8.80) may be rewritten as:

$$x^2 + Bx + C = 0$$

TABLE B8.17 Properties of Refrigerant R-12, Liquid and Saturated Vapor

Temp (F)	Pressure (lb/sq in.)		Volume (cu ft/lb)		Density (lb/cu ft)		Enthalpy (Btu/lb)			Entropy (Btu/lb-R)		Temp (F)
	Absolute	Gage	Liquid	Vapor	Liquid	Vapor	Liquid	Latent	Vapor	Liquid	Vapor	
t	P	p	v_f	v_g	$1/v_f$	$1/v_g$	h_f	h_{fg}	h_g	s_f	s_g	t
−100	1.4280	27.0138*	0.009985	22.164	100.15	0.045119	−12.466	78.714	66.248	−0.032005	0.18683	−100
−98	1.5381	26.7896*	.010002	20.682	99.978	.048352	−12.055	78.524	66.469	−.030866	.18623	−98
−96	1.6551	26.5514*	.010020	19.316	99.803	.051769	−11.644	78.334	66.690	−.029733	.18565	−96
−94	1.7794	26.2984*	.010037	18.057	99.627	.055379	−11.233	78.144	66.911	−.028606	.18508	−94
−92	1.9112	26.0301*	.010055	16.895	99.451	.059189	−10.821	77.954	67.133	−.027484	.18452	−92
−90	2.0509	25.7456*	0.010073	15.821	99.274	0.063207	−10.409	77.764	67.355	−0.026367	0.18398	−90
−88	2.1988	25.4443*	.010091	14.828	99.097	.067441	−9.9971	77.574	67.577	−.025256	.18345	−88
−86	2.3554	25.1255*	.010109	13.908	98.919	.071900	−9.5845	77.384	67.799	−.024150	.18293	−86
−84	2.5210	24.7884*	.010128	13.056	98.740	.076591	−9.1717	77.194	68.022	−.023049	.18242	−84
−82	2.6960	24.4321*	.010146	12.226	98.561	.081525	−8.7586	77.003	68.244	−.021953	.18192	−82
−80	2.8807	24.0560*	0.010164	11.533	98.382	0.086708	−8.3451	76.812	68.467	−0.020862	0.18143	−80
−78	3.0756	23.6592*	.010183	10.852	98.201	.092151	−7.9314	76.620	68.689	−.019776	.18096	−78
−76	3.2811	23.2409*	.010202	10.218	98.021	.097863	−7.5173	76.429	68.912	−.018695	.18050	−76
−74	3.4975	22.8002*	.010221	9.6290	97.839	.10385	−7.1029	76.238	69.135	−.017619	.18004	−74
−72	3.7254	22.3362*	.010240	9.0802	97.657	.11013	−6.6881	76.046	69.358	−.016547	.17960	−72
−70	3.9651	21.8482*	0.010259	8.5687	97.475	0.11670	−6.2730	75.853	69.580	−0.015481	0.17916	−70
−68	4.2172	21.3350*	.010278	8.0916	97.292	.12359	−5.8574	75.660	69.803	−.014418	.17874	−68
−66	4.4819	20.7959*	.010298	7.6462	97.108	.13078	−5.4416	75.467	70.025	−.013361	.17833	−66
−64	4.7599	20.2299*	.010317	7.2302	96.924	.13831	−5.0254	75.273	70.248	−.012308	.17792	−64
−62	5.0516	19.6360*	.010337	6.8412	96.739	.14617	−4.6088	75.080	70.471	−.011259	.17753	−62
−60	5.3575	19.0133*	0.010357	6.4774	96.553	0.15438	−4.1919	74.885	70.693	−0.010214	0.17714	−60
−58	5.6780	18.3607*	.010377	6.1367	96.367	.16295	−3.7745	74.691	70.916	−.009174	.17676	−58
−56	6.0137	17.6773*	.010397	5.8176	96.180	.17189	−3.3567	74.495	71.138	−.008139	.17639	−56
−54	6.3650	16.9619*	.010417	5.5184	95.993	.18121	−2.9386	74.299	71.360	−.007107	.17603	−54
−52	6.7326	16.2136*	.010438	5.2377	95.804	.19092	−2.5200	74.103	71.583	−.006080	.17568	−52
−50	7.1168	15.4313*	0.010459	4.9742	95.616	0.20104	−2.1011	73.906	71.805	−0.005056	0.17533	−50
−48	7.5183	14.6139*	.010479	4.7267	95.426	.21157	−1.6817	73.709	72.027	−.004037	.17500	−48
−46	7.9375	13.7603*	.010500	4.4940	95.236	.22252	−1.2619	73.511	72.249	−.003022	.17467	−46
−44	8.3751	12.8693*	.010521	4.2751	95.045	.23391	−0.8417	73.312	72.470	−.002011	.17435	−44
−42	8.8316	11.9399*	.010543	4.0691	94.854	.24576	−0.4211	73.112	72.691	−.001003	.17403	−42

TABLE B8.17 Properties of Refrigerant R-12, Liquid and Saturated Vapor *(Continued)*

Temp (F)	Pressure (lb/sq in.)		Volume (cu ft/lb)		Density (lb/cu ft)		Enthalpy (Btu/lb)			Entropy (Btu/lb-R)		Temp (F)
t	Absolute P	Gage p	Liquid v_f	Vapor v_g	Liquid $1/v_f$	Vapor $1/v_g$	Liquid h_f	Latent h_{fg}	Vapor h_g	Liquid s_f	Vapor s_g	t
−40	9.3076	10.9709*	0.010564	3.8750	94.661	0.25806	0.0000	72.913	72.913	0.000000	0.17373	−40
−38	9.8035	9.9611*	.010586	3.6922	94.469	.27084	0.4215	72.712	73.134	.001000	.17343	−38
−36	10.320	8.909*	.010607	3.5198	94.275	.28411	0.8434	72.511	73.354	.001995	.17313	−36
−34	10.858	7.814*	.010629	3.3571	94.081	.29788	1.2659	72.309	73.575	.002988	.17285	−34
−32	11.417	6.675*	.010651	3.2035	93.886	.31216	1.6887	72.106	73.795	.003976	.17257	−32
−30	11.999	5.490*	0.010674	3.0585	93.690	0.32696	2.1120	71.903	74.015	0.004961	0.17229	−30
−28	12.604	4.259*	.010696	2.9214	93.493	.34231	2.5358	71.698	74.234	.005942	.17203	−28
−26	13.233	2.979*	.010719	2.7917	93.296	.35820	2.9601	71.494	74.454	.006919	.17177	−26
−24	13.886	1.649*	.010741	2.6691	93.098	.37466	3.3848	71.288	74.673	.007894	.17151	−24
−22	14.564	0.270*	.010764	2.5529	92.899	.39171	3.8100	71.081	74.891	.008864	.17126	−22
−20	15.267	0.571	0.010788	2.4429	92.699	0.40934	4.2357	70.874	75.110	0.009831	0.17102	−20
−18	15.996	1.300	.010811	2.3387	92.499	.42758	4.6618	70.666	75.328	.010795	.17078	−18
−16	16.753	2.057	.010834	2.2399	92.298	.44645	5.0885	70.456	75.545	.011755	.17055	−16
−14	17.536	2.840	.010858	2.1461	92.096	.46595	5.5157	70.246	75.762	.012712	.17032	−14
−12	18.348	3.652	.010882	2.0572	91.893	.48611	5.9434	70.036	75.979	.013666	.17010	−12
−10	19.189	4.493	0.010906	1.9727	91.689	0.50693	6.3716	69.824	76.196	0.014617	0.16989	−10
−8	20.059	5.363	.010931	1.8924	91.485	.52843	6.8003	69.611	76.411	.015564	.16967	−8
−6	20.960	6.264	.010955	1.8161	91.280	.55063	7.2296	69.397	76.627	.016508	.16947	−6
−4	21.891	7.195	.010980	1.7436	91.074	.57354	7.6594	69.183	76.842	.017449	.16927	−4
−2	22.854	8.158	.011005	1.6745	90.867	.59718	8.0898	68.967	77.057	.018388	.16907	−2
0	23.849	9.153	0.011030	1.6089	90.659	0.62156	8.5207	68.750	77.271	0.019323	0.16888	0
2	24.878	10.182	.011056	1.5463	90.450	.64670	8.9522	68.533	77.485	.020255	.16869	2
4	25.939	11.243	.011082	1.4867	90.240	.67263	9.3843	68.314	77.698	.021184	.16851	4
6	27.036	12.340	.011107	1.4299	90.030	.69934	9.8169	68.094	77.911	.022110	.16833	6
8	28.167	13.471	.011134	1.3758	89.818	.72687	10.250	67.873	78.123	.023033	.16815	8
10	29.335	14.639	0.011160	1.3241	89.606	0.75523	10.684	67.651	78.335	0.023954	0.16798	10
12	30.539	15.843	.011187	1.2748	89.392	.78443	11.118	67.428	78.546	.024871	.16782	12
14	31.780	17.084	.011214	1.2278	89.178	.81449	11.554	67.203	78.757	.025786	.16765	14
16	33.060	18.364	.011241	1.1828	88.962	.84544	11.989	66.977	78.966	.026699	.16750	16
18	34.378	19.682	.011268	1.1399	88.746	.87729	12.426	66.750	79.176	.027608	.16734	18
20	35.736	21.040	0.011296	1.0988	88.529	0.91006	12.863	66.522	79.385	0.028515	0.16719	20
22	37.135	22.439	.011324	1.0596	88.310	.94377	13.300	66.293	79.593	.029420	.16704	22
24	38.574	23.878	.011352	1.0220	88.091	.97843	13.739	66.061	79.800	.030322	.16690	24
26	40.056	25.360	.011380	0.98612	87.870	1.0141	14.178	65.829	80.007	.031221	.16676	26
28	41.580	26.884	.011409	0.95173	87.649	1.0507	14.618	65.596	80.214	.032118	.16662	28

* Inches of mercury below one atmosphere.
Temperature conversion: $t_C = (t_F - 32.0)/1.8$.
For pressure, specific volume, enthalpy, and entropy conversions to SI Units see Tables B8.1 through B8.4.

Courtesy of E. I. du Pont de Nemours & Co.

TABLE B8.17 Properties of Refrigerant R-12, Liquid and Saturated Vapor (*Continued*)

Temp (F)	Pressure (lb/sq in.)		Volume (cu ft/lb)		Density (lb/cu ft)		Enthalpy (Btu/lb)			Entropy (Btu/lb-R)		Temp (F)
t	Absolute P	Gage p	Liquid v_f	Vapor v_g	Liquid $1/v_f$	Vapor $1/v_g$	Liquid h_f	Latent h_{fg}	Vapor h_g	Liquid s_f	Vapor s_g	t
30	43.148	28.452	0.011438	0.91880	87.426	1.0884	15.058	65.361	80.419	0.033013	0.16648	30
32	44.760	30.064	.011468	.88725	87.202	1.1271	15.500	65.124	80.624	.033905	.16635	32
34	46.417	31.721	.011497	.85702	86.977	1.1668	15.942	64.886	80.828	.034796	.16622	34
36	48.120	33.424	.011527	.82803	86.751	1.2077	16.384	64.647	81.031	.035683	.16610	36
38	49.870	35.174	.011557	.80023	86.524	1.2496	16.828	64.406	81.234	.036569	.16598	38
40	51.667	36.971	0.011588	0.77357	86.296	1.2927	17.273	64.163	81.436	0.037453	0.16586	40
42	53.513	38.817	.011619	.74798	86.066	1.3369	17.718	63.919	81.637	.038334	.16574	42
44	55.407	40.711	.011650	.72341	85.836	1.3823	18.164	63.673	81.837	.039213	.16562	44
46	57.352	42.656	.011682	.69982	85.604	1.4289	18.611	63.426	82.037	.040091	.16551	46
48	59.347	44.651	.011714	.67715	85.371	1.4768	19.059	63.177	82.236	.040966	.16540	48
50	61.394	46.698	0.011746	0.65537	85.136	1.5258	19.507	62.926	82.433	0.041839	0.16530	50
52	63.494	48.798	.011779	.63444	84.900	1.5762	19.957	62.673	82.630	.042711	.16519	52
54	65.646	50.950	.011811	.61431	84.663	1.6278	20.408	62.418	82.826	.043581	.16509	54
56	67.853	53.157	.011845	.59495	84.425	1.6808	20.859	62.162	83.021	.044449	.16499	56
58	70.115	55.419	.011879	.57632	84.185	1.7352	21.312	61.903	83.215	.045316	.16489	58
60	72.433	57.737	0.011913	0.55839	83.944	1.7909	21.766	61.643	83.409	0.046180	0.16479	60
62	74.807	60.111	.011947	.54112	83.701	1.8480	22.221	61.380	83.601	.047044	.16470	62
64	77.239	62.543	.011982	.52450	83.457	1.9066	22.676	61.116	83.792	.047905	.16460	64
66	79.729	65.033	.012017	.50848	83.212	1.9666	23.133	60.849	83.982	.048765	.16451	66
68	82.279	67.583	.012053	.49305	82.965	2.0282	23.591	60.580	84.171	.049624	.16442	68
70	84.888	70.192	0.012089	0.47818	82.717	2.0913	24.050	60.309	84.359	0.050482	0.16434	70
72	87.559	72.863	.012126	.46383	82.467	2.1559	24.511	60.035	84.546	.051338	.16425	72
74	90.292	75.596	.012163	.45000	82.215	2.2222	24.973	59.759	84.732	.052193	.16417	74
76	93.087	78.391	.012201	.43666	81.962	2.2901	25.435	59.481	84.916	.053047	.16408	76
78	95.946	81.250	.012239	.42378	81.707	2.3597	25.899	59.201	85.100	.053900	.16400	78
80	98.870	84.174	0.012277	0.41135	81.450	2.4310	26.365	58.917	85.282	0.054751	0.16392	80
82	101.86	87.16	.012316	.39935	81.192	2.5041	26.832	58.631	85.463	.055602	.16384	82
84	104.92	90.22	.012356	.38776	80.932	2.5789	27.300	58.343	85.643	.056452	.16376	84
86	108.04	93.34	.012396	.37657	80.671	2.6556	27.769	58.052	85.821	.057301	.16368	86
88	111.23	96.53	.012437	.36575	80.407	2.7341	28.241	57.757	85.998	.058149	.16360	88

TABLE B8.17 Properties of Refrigerant R-12, Liquid and Saturated Vapor (*Continued*)

Temp (F)	Pressure (lb/sq in.)		Volume (cu ft/lb)		Density (lb/cu ft)		Enthalpy (Btu/lb)			Entropy (Btu/lb-R)		Temp (F)
t	Absolute P	Gage p	Liquid v_f	Vapor v_g	Liquid $1/v_f$	Vapor $1/v_g$	Liquid h_f	Latent h_{fg}	Vapor h_g	Liquid s_f	Vapor s_g	t
90	114.49	99.79	0.012478	0.35529	80.142	2.8146	28.713	57.461	86.174	0.058997	0.16353	90
92	117.82	103.12	.012520	.34518	79.874	2.8970	29.187	57.161	86.348	.059844	.16345	92
94	121.22	106.52	.012562	.33540	79.605	2.9815	29.663	56.858	86.521	.060690	.16338	94
96	124.70	110.00	.012605	.32594	79.334	3.0680	30.140	56.551	86.691	.061536	.16330	96
98	128.24	113.54	.012649	.31679	79.061	3.1566	30.619	56.242	86.861	.062381	.16323	98
100	131.86	117.16	0.012693	0.30794	78.785	3.2474	31.100	55.929	87.029	0.063227	0.16315	100
102	135.56	120.86	.012738	.29937	78.508	3.3404	31.583	55.613	87.196	.064072	.16308	102
104	139.33	124.63	.012783	.29106	78.228	3.4357	32.067	55.293	87.360	.064916	.16301	104
106	143.18	128.48	.012829	.28303	77.946	3.5333	32.553	54.970	87.523	.065761	.16293	106
108	147.11	132.41	.012876	.27524	77.662	3.6332	33.041	54.643	87.684	.066606	.16286	108
110	151.11	136.41	0.012924	0.26769	77.376	3.7357	33.531	54.313	87.844	0.067451	0.16279	110
112	155.19	140.49	.012972	.26037	77.087	3.8406	34.023	53.978	88.001	.068296	.16271	112
114	159.36	144.66	.013022	.25328	76.795	3.9482	34.517	53.639	88.156	.069141	.16264	114
116	163.61	148.91	.013072	.24641	76.501	4.0584	35.014	53.296	88.310	.069987	.16256	116
118	167.94	153.24	.013123	.23974	76.205	4.1713	35.512	52.949	88.461	.070833	.16249	118
120	172.35	157.65	0.013174	0.23326	75.906	4.2870	36.013	52.597	88.610	0.071680	0.16241	120
122	176.85	162.15	.013227	.22698	75.604	4.4056	36.516	52.241	88.757	.072528	.16234	122
124	181.43	166.73	.013280	.22089	75.299	4.5272	37.021	51.881	88.902	.073376	.16226	124
126	186.10	171.40	.013335	.21497	74.991	4.6518	37.529	51.515	89.044	.074225	.16218	126
128	190.86	176.16	.013390	.20922	74.680	4.7796	38.040	51.144	89.184	.075075	.16210	128
130	195.71	181.01	0.013447	0.20364	74.367	4.9107	38.553	50.768	89.321	0.075927	0.16202	130
132	200.64	185.94	.013504	.19821	74.050	5.0451	39.069	50.387	89.456	.076779	.16194	132
134	205.67	190.97	.013563	.19294	73.729	5.1829	39.588	50.000	89.588	.077623	.16185	134
136	210.79	196.09	.013623	.18782	73.406	5.3244	40.110	49.608	89.718	.078489	.16177	136
138	216.01	201.31	.013684	.18283	73.079	5.4695	40.634	49.210	89.844	.079346	.16168	138
140	221.32	206.62	0.013746	0.17799	72.748	5.6184	41.162	48.805	89.967	0.080205	0.16159	140
142	226.72	212.02	.013810	.17327	72.413	5.7713	41.693	48.394	90.087	.081065	.16150	142
144	232.22	217.52	.013874	.16868	72.075	5.9283	42.227	47.977	90.204	.081928	.16140	144
146	237.82	223.12	.013941	.16422	71.732	6.0895	42.765	47.553	90.318	.082794	.16130	146
148	243.51	228.81	.014008	.15987	71.386	6.2551	43.306	47.122	90.428	.083661	.16120	148
150	249.31	234.61	0.014078	0.15564	71.035	6.4252	43.850	46.684	90.534	0.084531	0.16110	150
152	255.20	240.50	.014148	.15151	70.679	6.6001	44.399	46.238	90.637	.085404	.16099	152
154	261.20	246.50	.014221	.14750	70.319	6.7799	44.951	45.784	90.735	.086280	.16088	154
156	267.30	252.60	.014295	.14358	69.954	6.9648	45.508	45.322	90.830	.087159	.16077	156
158	273.51	258.81	.014371	.13976	69.584	7.1551	46.068	44.852	90.920	.088041	.16065	158
160	279.82	265.12	0.014449	0.13604	69.209	7.3509	46.633	44.373	91.006	0.088927	0.16053	160

Source: CARRIER—Handbook of Air Conditioning System Design, McGraw-Hill Book Co., 1965.

TABLE B8.18 Calculation Results for Problem B8.10

Pressure psia	Temperature °F	Enthalpy Btu/lb$_m$	Entropy Btu/(lb$_m\cdot$°R)	Spec. Vol. ft^3/lb$_m$	Steam quality
139.33	104.00	32.07	0.06492	0.012783	0.00000
122.95	95.00	32.07	0.06502	0.024723	0.03818
108.04	86.00	32.06	0.06517	0.039340	0.07399
94.51	77.00	32.06	0.06539	0.057256	0.10774
82.28	68.00	32.05	0.06566	0.079250	0.13970
71.27	59.00	32.04	0.06600	0.106360	0.17006
61.39	50.00	32.03	0.06640	0.139801	0.19896
52.58	41.00	32.00	0.06686	0.181284	0.22648
44.76	32.00	31.95	0.06737	0.232750	0.25267
37.85	23.00	31.88	0.06791	0.297063	0.27750
31.78	14.00	31.77	0.06897	0.377216	0.30084
26.48	5.00	31.59	0.06846	0.477890	0.32244
21.89	−4.00	31.31	0.06935	0.603310	0.34187
17.94	*−13.00*	*30.87*	*0.06946*	*0.760557*	*0.35839*
14.56	−22.00	30.18	0.06910	0.953742	0.37094
11.71	−31.00	29.13	0.06797	1.189298	0.37809

where

$$B = 2\left[\frac{v_f}{v_g - v_f} + \frac{(Jg_c)}{(\dot{G})^2}\frac{(h_g - h_f)}{(v_g - v_f)^2}\right]$$

$$= 2[0.03404 + 105.300] = 210.7$$

$$C = \frac{v_f^2 - v_1^2 + 2\left(\frac{Jg_c}{\dot{G}}\right)^2 (h_f - h_1)}{(v_g - v_f)^2}$$

$$= \frac{(0.012396)^2 - (0.012783)^2 - (2)(0.103394)}{(0.132623)}$$

$$= 0.155923$$

Then, the quality x is equal to

$$x = \frac{-B \mp \sqrt{B^2 - 4C}}{2} = 0.0740$$

and, from Eqs. (B8.77) to (B8.79):

$$h = h_f + x(h_s - h_g) = 32.06 \text{ Btu/lb}_\text{m}$$

$$v = v_f + x(v_s - v_g) = 0.03934 \text{ ft}^3\text{/lb}_\text{m}$$

$$s = s_f + x(s_s - s_g) = 0.06517 \text{ Btu/(lb}_\text{m}{\cdot}^\circ\text{R)}$$

Similar procedures for other pressures (or temperatures) result in the tabulated values. Sample data in Table B8.18 shows that the maximum entropy is 0.06946 Btu/lb$_m$, the corresponding pressure (critical or choke pressure) is 17.94 psia (1.24 bar), and the corresponding temperature is $t_{\text{exit}} = -13°\text{F}$ ($-25°\text{C}$). Try to relate the above presented findings to the Fanno line model presented in Fig. B8.16.

The exit velocity of the fluid is calculated from the continuity equation applied to the pipe exit condition:

$$w_{\text{exit}} = c = v_{\text{exit}}\dot{G} = (0.760557)(322.4) = 245.362 \text{ ft/s } (74 \text{ m/s})$$

TRANSIENT FLOW ANALYSIS

General Background

Hydraulic transient problems in piping systems result from faulty plant design and also from faulty plant operating procedures as, for example, rapid changes in operational functioning of components such as pumps and valves. They may produce rapid momentum changes as the column of water in the system is suddenly stopped or started. Large momentum changes can subject system components to severe force transients, and these must be considered when designing the system to ensure its safe, reliable operation.

Hydraulic transient problems may result in the formation of vapor cavities when the system pressure is reduced to the saturation pressure at a certain fluid temperature. Vapor cavities can easily form in a piping system that has a wide elevation range, if permitted to drain after the system is shut down. This behavior is known as *column separation.* In a large cooling-water system, reclosure of water columns after separation can result in destructive water hammer loads if appropriate design consideration is not given to alleviate these effects.

Analysis of hydraulic transients should be performed for all major plant systems. In addition to the maximum and minimum design pressures for components and the forcing functions for pipe supports, the analysis will help provide appropriate procedures for system startup and shutdown and operator responses to power failure.

Transients that exhibit single-phase flow can be analyzed by one-dimensional wave theory. During a transient condition, pressure waves are generated throughout the system. In complex systems, these waves may be analyzed with the aid of a computer.

Newton's second law, the equation of motion, is a vector relation. Considering the x-direction, a useful working form of the momentum theorem may be written[11]:

$$\Sigma F_x = \frac{d}{dt}\left(\frac{m}{g_c}w_x\right) = \int_{cv} \frac{\partial}{\partial t}\left(\frac{\rho}{g_c}w_x\right) dV + \int \frac{\rho}{g_c} w_n w_x \, dA_{\text{out}} - \int \frac{\rho}{g_c} w_n w_x \, dA_{\text{in}} \qquad \text{(B8.92)}$$

where the left-hand side represents the algebraic sum of the x-forces acting on the system during the time interval *dt.* By using vector notation, the momentum theorem for a control volume may be represented by a single equation

$$\Sigma\bar{F} = \frac{\partial}{\partial t}\int_{cv}\frac{\rho}{g_c}\bar{w}dV + \int_{cs}\frac{\rho}{g_c}(\bar{w}\cdot\overline{dA})\bar{w} \tag{B8.93}$$

which is the fundamental principle in the dynamics of fluid motion. In words, the resultant force acting on a control volume (*cv*) of the pipe segment is equal to the time rate of increase of linear momentum within the control volume plus the net efflux of linear momentum across the control surface (*cs*) of the pipe segment boundary. The term $\Sigma\bar{F}$ in Equation (B8.93) is the algebraic sum of all forces exerted by the surroundings on the material instantaneously occupying the control volume. These include (1) *body forces* which are proportional either to the volume or mass of the body (e.g., forces of gravitational attraction) and (2) *surface forces* which are exerted at the control surface by the material outside of the control volume on the material inside the control volume (e.g., pressure acting on the control surface). It is generally advantageous to take surface normal to the velocity wherever it cuts across the flow.

The first partial derivative term in Eq. (B8.93) is the average time rate of increase of linear momentum ($m\bar{w}/g_c$) of the system during time Δt. In the limit as Δt approaches zero, it becomes $d/dt(m\bar{w}/g_c)$. In Ref. 29 this term is called the *wave force* F_{wi} on a bounded pipe i-th segment of length L_i. A *segment* (within a control volume) is always defined as a straight pipe between elbows, turns, or between an elbow and piping component or equipment. Fluid acceleration inside the pipe generates forces on all segments that are bounded at either end by an elbow, a turn, or a piping system component.

Immediately following a flow disturbance due to a sudden flow rate reduction (by a rapid control valve adjustment) or flow-rate increase (e.g., a pipe break), a compression or a decompression wave propagates into the fluid contained by the pipe. As the fluid pressure is increased or reduced, its density changes accordingly. The compression or decompression travels at sonic speed through all pipe segments, finally arriving at the vessel where a decompression or compression wave is reflected back toward the disturbance location (valve or a rupture). As compression or decompression waves move through the pipe, the pressure at one end of each segment exceeds the pressure at the other, resulting in net forces F_{wi}.

Successive wave transmissions and associated fluid acceleration forces decay as steady discharge is achieved, and this transient term in Eq. (B8.93) vanishes when steady flow is reached. Although the wave force F_{wi} vanishes at steady flow, the second term in Eq. (B8.93) in Ref. 29, called the *blowdown force,* survives on the discharging segment. This phenomenon will be discussed in more detail in the subsection "Pipe Rupture."

Note again, that when steady flow is reached, the wave force vanishes. During steady-state conditions, there is no unbalanced force in the segment. Also, note that a positive segment force acts along the pipe axis opposite to the direction of flow. Equation (B8.93) is valid for bounded pipe regardless of the bend angle at either end of the segment. Large computer programs have been developed to help predict forces generated during postulated hydraulic transients in piping systems.

Pipe Rupture

If a pipe break occurs, thrust and jet forces generated by fluid discharge can cause further damage to piping and other plant components unless adequate mechanical restrains are employed. Discharging fluid creates a reaction thrust on the ruptured pipe itself and impingement loads on objects struck by the jet of fluid. Moreover, fluid acceleration inside the pipe generates forces on all segments that are bounded at either end by an elbow or turn. Although pipe thrust may basically be considered as a steady-state phenomenon, its initiation is accompanied by a violent transient following the sudden sonic decompression wave starting at the break location.

The mechanics of the steady pipe thrust problem are similar to those involved in rocket propulsion. The steady thrust can be computed as follows. If A, is the exit area (or the area of a break), p_0, is the exit-plane pressure, ρ_e is the density of the escaping fluid to the atmosphere at pressure p_{atm}, $\dot{m}$ is the escaping mass flow rate, and w_0 is the velocity of efflux, the momentum Equation (B8.92) leads to the following expression for the thrust[11]:

$$T = \frac{\dot{m}}{g_c} w_e + (p_e - p_{\mathrm{atm}}) A_e \ \mathrm{lb_f} \qquad \text{(B8.94)}$$

In a rocket jet engine with a converging-diverging nozzle there is a minimum throat area A_t characterized by the critical pressure ratio and the sonic velocity (Ma = 1). Provided the nozzle is so designed that its enlarged exit area behind the throat (as a Venturi tube) ensures expansion down to pressure $p_0 = p_{\mathrm{atm}}$, prevailing in the external atmosphere, the exit velocity w, becomes supersonic, and the thrust of the engine reaches its maximum. This important conclusion is valid irrespective of the type of fluid considered, whether gaseous or liquid.

If the nozzle were a simple converging nozzle, as it could be considered in a pipe break, A_0 would equal A_t (throat area). After transformation of Eq. (B8.94) by using the *ideal gas* relations, as presented in section "Single-Phase Flow in Nozzles, Venturi Tubes, and Orifices," subsection "Steam and Gas Service," the following expression for a simple convergent nozzle maximum thrust is found[11]:

$$T_{\mathrm{conv}} = A_t \left[2p_o \left(\frac{2}{k+1} \right)^{1/(k-1)} - p_{\mathrm{atm}} \right] \qquad \text{(B8.95)}$$

Then, for *superheated steam* ($k = 1.3$), the following ideal gas thrust may reach its maximum value

$$T = A_t(1.26p_0 - p_{\mathrm{atm}}) \qquad \text{(B8.96)}$$

and for *saturated steam* ($k = 1.1$)

$$T = A_t(1.23p_0 - p_{\mathrm{atm}}) \qquad \text{(B8.97)}$$

If *incompressible liquid* escapes from a vessel (or broken pipe), where stagnation pressure is p_0, its subsonic exit velocity is expressed by Eq. (B8.35) (with $z = 0$ and $p_2 = p_{\mathrm{atm}}$). Then, by using this expression for w_0 in Eq. (B8.94), the steady thrust (reaction force) can be found from the following expression:

$$T = \frac{\dot{m}}{g_c} w_e = \frac{\rho}{g_c} A_e w_e^2 = \frac{\rho}{g_c} A_e \frac{2g_c(p_1 - p_{\mathrm{atm}})}{\rho} = 2A_e(p_1 - p_{\mathrm{atm}}) \qquad \text{(B8.98)}$$

Thus, while the speed of efflux is inversely proportional to the density, the thrust in this case is independent of the density and depends only on the area of the break (orifice) and the gauge pressure ($p_1 - p_{\mathrm{atm}}$).

As an example, consider a vessel containing cold water at 1050 psia (72.4 bar).

As a result of a postulated 12-in (0.3-m) pipe break, water is discharged into the atmosphere. As calculated by using Eq. (B8.98) this would produce an impressive steady thrust of 225,000 lb_f (999,600 N), while the velocity of efflux, calculated from Eq. (B8.35), at its density of 62.5 lb_m/ft^3 (1020 kg/m^3), is equal to 388.1 ft/s (118.3 m/s).

If a *two-phase critical flow* escapes from a vessel or a broken pipe, one may expect somewhat different thrust characteristics. Various critical two-phase flow models, as discussed in the section "Critical Gas-Liquid Flow," provide the mass flux and thermodynamic parameters (choke pressure, steam quality) at the nozzle throat in terms of vessel stagnation properties and pipe fL/D. Moody[45] used his model (see subsection "Moody Model") for calculating critical blowdown from a 1050 psia (72.4 bar), typical for a boiling water reactor (BWR) vessel. He found that at $fL/D = 0$ (pipe break just where it is attached to a vessel), T/A_e for critical saturated water blowdown is 183,000 lb_f/ft^2 (8,762 kN/m^2), which is about half the value of thrust/area from Eq. (B8.98) for incompressible liquid blowdown. Furthermore, T/A_e for saturated steam is 182,000 lb_f/ft^2 (8,714 kN/m^2), which is closely predicted by Eq. (B8.97). Predicted thrust and impingement properties are shown to give reasonable agreement with available data. It is also clear that increased values fL/D (pipe break at a certain distance from the vessel) would reduce the thrust. (Compare with the Fanno model discussed in section "Critical Gas-Liquid Flow," subsection "Fanno Model.")

For more detailed discussion and numerical examples on this subject, see Refs. 29 and 45.

Typical Water Hammer Transients

Water hammer is a pressure wave, usually resulting from rapid changes in the flow rate in a pipe, which is characterized by the transformation of kinetic energy of moving fluid into pressure. Typical transients for a water-filled system include rapid valve closure, pump startup, or pump trip within the circulating water system, feedwater system, or service water system of a power plant, or the cooling water system of a process plant. The water hammer phenomena in a piping system also may result due to formation of vapor pockets at locations where the pressures are reduced to or below vapor pressure. This phenomenon is normally called *column separation.* The subsequent collapse of these vapor pockets may develop significant pressure spikes which should be taken into consideration in system design and analysis.

The basic water hammer equation is derived from equations of conservation of mass and momentum in a single pipeline. For low-flow velocities [much lower than the speed of sound in the fluid ($\text{Ma} \ll 1$)] and for columns of fluid rejoined near a closed valve or a dead end (final flow velocity $w = 0$), the produced peak (maximum) pressure of inertia is estimated from the following equation (see Refs. 1 and 46):

$$\Delta p = \frac{\rho}{g_c} c \Delta w \tag{B8.99}$$

where Δw is the relative closure velocity of the fluid before impact, ρ is the fluid density, and c is the sonic wave speed. Using the bulk modulus of elasticity of water $K = 0.3 \times 10^6$ psi (2.07×10^6 kPa) the speed of sound in water without any pipe wall effect is ~4700 ft/s (~1435 m/s). For a circular elastic steel pipe of diameter *d,* in which the Young's modulus of elasticity for the wall material is $E = 30 \times 10^6$ psi (206×10^6 kPa), the wave speed is expressed by[1]:

$$c = \sqrt{\frac{g_c K/\rho}{1 + \frac{d}{e}\frac{K}{E}}} \tag{B8.100}$$

where e is pipe wall thickness. By using Eq. (B8.100) for cold water, the wave speed c varies from 4490 ft/s (1370 m/s) for $d/e = 10$ to 2360 ft/s (720 m/s) for $d/e = 300$. If the valve closure time is less than $t = 2L/c$, where L is the length of a pipe from the valve to the upstream vessel, the action is called *rapid closure.* The term *slow closure* refers to times of closure greater than $2L/c$. In the case of column separation or column rejoining (*reclosure*), large flow velocities are not necessary for significant peak pressures and segment forces. For example, for cold water with ~10 ft/s (~3 m/s) closure velocity in a 10 in pipe, a peak pressure of inertia of ~570 psi (~39 bar), as calculated from Eq. (B8.99), could produce a segment force as high as ~43,000 lb_f (~190 kN).

NUREG-0582[47] has identified a number of high-energy systems in nuclear power plants that have had a history of transient-related problems. It also discussed the major causes of transient problems which are attributable to events such as pump startup, stopping, or seizure; pump startup with inadvertently voided discharge lines; valve opening, closing, and instability; check-valve closure and delayed opening; water entrainment in steam lines; steam bubble collapse, and mixing of subcooled water and steam from interconnected systems; slug impact due to rapid condensation; and column separation and subsequent rejoining. Some of these transient events can be prevented by implementing appropriate operating procedures. However, there are other events that may occur during normal/upset, emergency, or faulted plant operating conditions. These flow transients in the piping system may cause significant dynamic loads and large reactions on the piping, piping supports, and connected equipment. These transient loads must be analyzed and incorporated into the pipe stress analysis and pipe support evaluation.

The service water system of a nuclear station illustrates the application. The system is designed to supply cooling water to remove heat from component heat exchangers throughout the station. Hydraulically, such a system is far more complex than a condenser circulating water system because there are numerous heat exchangers and considerable variations in piping elevation.

Figure B8.55 depicts the major components of a typical service water system in the case of a pressurized water reactor (PWR) unit; Fig. B8.56 shows the profile (vertical) of a portion of the system, including the control building air-conditioning water cooler (HVK) and emergency diesel engine cooling water (EGS) piping. Because of the high elevation of the HVK piping, a vapor gap will form on either side of the HVK heat exchanger when the service water pumps trip out. Also, because of the U-shaped piping configuration, a water column will be retained in the central portion of the HVK piping, as shown. After the pump has restarted, the vapor gap at the inlet piping may close rapidly—resulting in severe pressure and force transients—unless proper care is taken in the design and operation of the system.

Typical Steam Hammer Transients

Steam hammer is defined as the pressure surge generated by transient flow of superheated or saturated steam in a steam line, but not as the collapse of steam

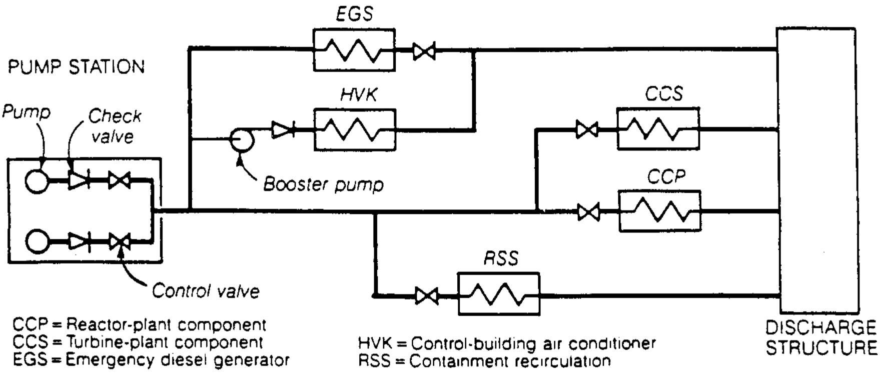
EGS
PUMP STATION
HVK
CCS
Pump
Check valve
Booster pump
CCP
RSS
Control valve
CCP = Reactor-plant component
CCS = Turbine-plant component
EGS = Emergency diesel generator
HVK = Control-building air conditioner
RSS = Containment recirculation
DISCHARGE STRUCTURE

FIGURE B8.55 Major components of a service water system for a PWR-type nuclear power plant.

pockets which was described in the previous section. Usually the pressure spikes due to steam hammer are not as high as in water systems because of the large compressibility of steam.

Typical applications of a steam hammer program to perform analysis of compressible flow include studies of the turbine generator main steam and bypass system, the safety relief valve blowdown, the reactor core isolation cooling system, the high-pressure coolant injection system, and so forth. The program could apply the method of characteristics with finite difference approximations for solutions of unsteady one-dimensional compressible fluid flows. The choking phenomena of

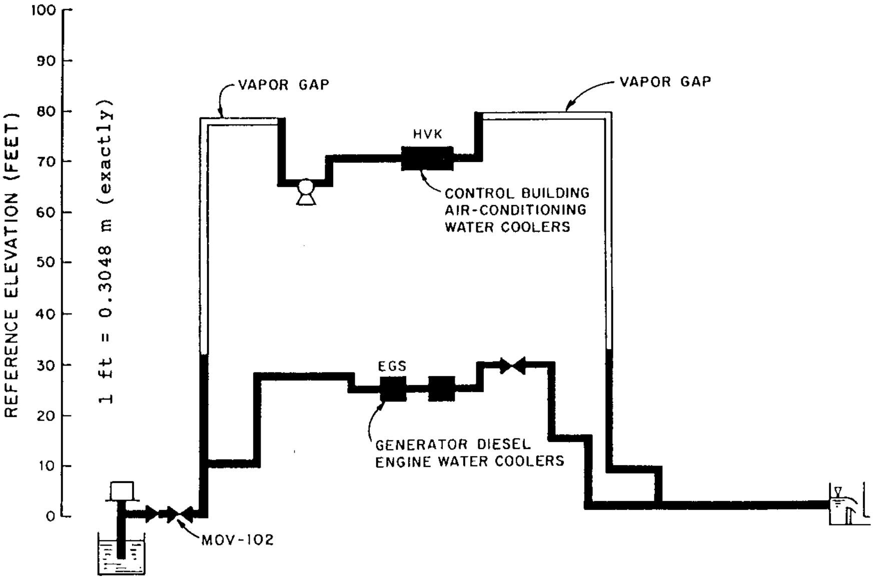
100
90
80
70
60
50
40
30
20
10
0
REFERENCE ELEVATION (FEET)
1 ft = 0.3048 m (exactly)
VAPOR GAP
VAPOR GAP
HVK
CONTROL BUILDING AIR-CONDITIONING WATER COOLERS
EGS
GENERATOR DIESEL ENGINE WATER COOLERS
MOV-102

FIGURE B8.56 Partial service water system profile showing vapor gap.

steam flow are included in the program. In analyzing transients in a safety/relief-valve discharge system, the program has an option to handle the blowdown forces at the interface of steam discharging into the suppression pool.

Steam-Condensation-Induced Water Hammer

Several flow conditions may lead to severe condensation-induced water hammers, with steam and water counterflow events in a horizontal pipe being potentially the most severe. Water-cannon events (subcooled water with condensing steam in a vertical pipe) may occur if the right geometry and system conditions exist. Pressurized water entering a vertical steam-filled pipe can cause a severe transient event over a wide range of piping geometry conditions. Hot water entering a lower-pressure line is also a very common condition for many nuclear power plant piping systems, especially for those heater drain dump lines which lead to the condenser.

Condensation-induced water hammers of the steam and water counterflow type can occur in a horizontal pipe with a steam- and water-stratified environment. If the water is highly subcooled, violent condensation may occur. This rapid condensation process will generate a significant steam flow above the water surface. The shearing forces at the interface between the steam and the subcooled water can create enough turbulence to generate a water slug, which in turn will entrap an isolated steam pocket. Continued rapid condensation of the entrapped steam will accelerate the water slug into the void, causing a damaging water hammer. Two conditions must coexist in the system to initiate this condensation-induced water hammer, namely:

- A steam and subcooled water stratified flow exists in a significant length of a horizontal or near-horizontal pipe
- Substantial turbulence exists at the steam-water interface

Depending on the void fraction and subcooling in the two-phase flow environment, the magnitude of the pressure wave generated by steam condensation and bubble collapse can be devastating. These events should be prevented from occurring by all practical means (see Refs. 28, 29, 48).

In summary, the significant condensation-induced water hammer conditions are:

- Subcooled water with condensing steam in a vertical pipe
- Steam and water counterflow in a horizontal pipe
- Pressurized water entering a vertical steam-filled pipe
- Hot water entering a lower-pressure line

Practical Recommendations to Minimize Water Hammers

Protection Devices to Minimize Water Hammers. Various devices may be used to protect piping systems from damage by severe hydraulic transients. Check valves, standpipes, and accumulators prevent the occurrence of transients or reduce their effects.

Vacuum-breaker valves allow air to enter a piping system when a vacuum develops. Sometimes installed on heat exchangers, these relief valves may be located in the system where water-column separation may occur during transient conditions. Air in the system will significantly attenuate pressure spikes when water columns rejoin.

Check valves are sometimes used in service water systems to prevent column separation. Following a power loss, water in the high portion of a riser may drain out because of the large change in elevation, creating a vapor cavity. In this situation, a check valve may be installed at the bottom of the upstream riser to prevent water drainage and column separation.

A *standpipe* may be used in a cooling water system where relief of vacuum pressure is necessary. Serving as a simple surge tank, the standpipe admits water and possibly air into the system. This either eliminates column separation or reduces the severity of column reclosure because of air injection.

An *accumulator* of proper size may effectively eliminate column separation after a power failure. The device, a closed container partially filled with water topped with compressed air, is usually installed immediately downstream from a pump station along with a check valve. Following a power failure, the pump coasts down and the pump head decreases rapidly, causing the check valve to close. Compressed air in the accumulator will supply fluid flow pneumatically into the main line to minimize downsurge, and will provide a cushion on the return surge.

Field Tests for Hydraulic Transients. Frequently, field tests for hydraulic transient loading are conducted to accomplish the following:

- Verify that system design is adequate
- Determine the best way to operate a system to avoid transients
- Discover scenarios of unanticipated transients
- Validate results obtained from analytical approaches

The first three functions are often included as part of the normal startup and checkout of a new system.

Field tests serve to measure key parameters related to hydraulic transients while operating a system in a manner that could produce plausible transient events. Validation of analytical results involves benchmarking the computation method for known operating parameters; or benchmarking, combined with checking of input variables such as pump characteristics and valve opening or closing time. In many cases, transients introduced by valve opening or closing and by pump trip or startup are overpredicted, and can be improved with the help of field test data.

System Design Considerations. There are three ways to prevent or minimize fluid transients through effective system design: (1) general design practices that either reduce or eliminate a possible transient; (2) adding special systems to either control or prevent a transient; and (3) performing time-history analysis of loads, and designing a pipe support system to accommodate the transient loads.

General design practices should include:

- Designing all steam-line piping to provide continuous downward slopes with provisions for low-point drainage to preclude the formation of water pockets (upstream of a potentially isolable valve is considered to be a low point).
- Where allowed by system design function, providing slow-opening/closing valves
- Providing high-point vents or air-release valves in water-filled lines to allow system venting to eliminate the formation of air pockets
- Using vacuum breakers to minimize potential dynamic effects by providing an air cushion in fluid-carrying pipelines that could otherwise be under an occasional vacuum

Special systems that preclude or diminish the effects of fluid transients include:

- Loop-fill systems that continuously maintain a primary piping system in a filled and pressurized condition during operating modes when that system is on standby (e.g., fire-protection system and emergency core-cooling systems).
- Steam-line preheating systems that continuously maintain or allow gradual heatup of steam supply lines to reduce rapid steam condensation and the development of water slugs that generate substantial loads on the piping system.

The overall piping system stress qualification should consider as appropriate all loading conditions, including the dynamic effects of fluid transients. Piping codes prior to 1970 were rather vague in this regard; however, the more recent editions of ASME Section III of the Boiler and Pressure Vessel Code are quite specific and require this consideration. The forcing functions generated by manual or computer modeling are incorporated into the stress analyses which are used as the basis for designing a support system that can accept the loads and maintain them within the code-allowable limits for safe, continuous system operation.

Pump Net Positive Suction Head (NPSH) Transients

In dealing with net positive suction head problems, effort has been made to distinguish between NPSH required or NPSHR and NPSH available or NPSHA. The NPSHA is a function of pump design or pump requirement, while the NPSHA is a function of the pump system which must provide the required NPSH. The available NPSH must always exceed the required NPSH by a certain margin which must be positive even during transient conditions (see Ref. 49).

Large steam-electric power plants are equipped with several stages of low-pressure and high-pressure feedwater heating within the turbine cycle. There may be as many as three or four stages of low-pressure closed feedwater heaters situated between the condenser and the deaerator which supplies heated condensate to the feedwater pump. Under transient conditions when load change is sudden and large, a check valve in the steam extraction line from turbine to deaerator closes to avoid backflow and possible damage to turbine blading. Deaerator pressure at this moment decreases fairly rapidly, while colder water from the condensate system continues to enter the deaerator, and hot water continues to be withdrawn.

Turbine load rejection is a case of an even more severe transient. Immediately following a turbine load rejection from a maximum load, warm condensate will enter the deaerator initially. The temperature of the condensate, however, will eventually decay to a point exactly equal to the condenser hot-well temperature because the low-pressure heaters will no longer receive extraction steam from the turbine. It is this transient condition which should receive prime consideration in feedwater system design.

As extraction steam is cut off from the deaerator, pressure in the corresponding deaerator storage tank falls rapidly, as does the pressure at the pump suction. However, temperature and vapor pressure of water at the pump do not change until colder water from the tank has had a chance to travel down the pump suction piping. If actual pressure at the pump impeller falls below the vapor pressure there, cavitation will result. It is the production of these vapor pockets, or bubbles, and the consequent collapse as the head, or pressure, is developed in the impeller, that generates the cavitation which produces the noise, vibration, and the pitting attack of the impeller's surfaces. The measurable consequences of cavitation on a pump's performance are a loss in flow and head resulting from voiding of vane passages, turbulence, and two-phase flow.

The design of fluid systems must clearly establish criteria that address steady-state and transient conditions from the view of system or component protection. Certain types and severity levels of transients can be accommodated by the pump but may not be tolerated by the system.

Short-term transients can be considered momentary events where the available NPSH falls below the required NPSH at a particular moment. These events will probably have no measurable effects on the pump mechanically and, because of their duration of fractions of a second to seconds, should not measurably affect performance which would be restored with restored suction conditions.

Transients which occur for periods that range from seconds to a few minutes will have a measurable impact on performance. Sustained suction conditions that are below minimum NPSH requirements will cause cavitation in the eye of the pump's suction impeller, which in turn will reduce flow and developed head. Long-term, low-NPSH transients, by design, must be avoided.

To protect the main feed pump against unwanted transient suction pressure decay and cavitation, the following steps can be considered by the plant designer:

1. Increasing static suction head by raising the deaerator or lowering the pumps. The absence of high structure in nuclear power plants creates a location problem for a deaerator.
2. Increasing deaerator storage capacity. A deaerator removes entrained oxygen from feedwater and provides a surge tank which reduces the possibility for rapid transients and provides approximately 5-min storage if a condensate pump fails.
3. Reducing pump suction pipe (downcomer) resident capacity by sizing the connecting piping as small as practical and routing it as directly as possible. Preliminary sizing of the downcomer should be based on a flow velocity of 10 ft/s (3 m/s).
4. Lowering deaerator pressure. In most fossil-fueled power plants, deaerators operate at either the fourth or fifth turbine extraction point in the eight-heater cycle which means at 80 or 160 psia (5.5 or 11 bar) respectively. Operating experience with these pressure levels is sufficient to justify the use of either.
5. Installing a booster feed pump. Auxiliary turbine-driven feed pumps require low-speed, low-head booster pumps (generally of single-stage design) ahead of the main feed pump. This booster pump is capable of handling the required capacity with the low NPSH required. A survey revealed that every power plant larger than 400 MW currently under construction uses auxiliary turbine drives for feed pumps and their boosters.
6. Injecting steam into deaerator (pegging).
7. Injecting cold water at a point sufficiently ahead of the pump suction nozzle to provide good mixing (deaerator bypass system).

While items (1) through (5) may be called preventive actions, items (6) and (7) are corrective actions.

In order to chose the base design for a particular plant, information on the magnitude of the NPSHA decay during the transient is needed. Theoretical background for computerized or hand calculations relating to these problems, as well as numerical examples, are presented in Refs. 50, 51, 52.

Pump NPSH transients have been modeled, photographed under test conditions, and certain chronic transients have resulted in verifiable documented cases where NPSH conditions were the cause of pump problems. However, in spite of our sophistication and diligence in this area, over many decades NPSH transients and their impact remain a serious problem.

NPSH transients must be understood as well as the pump's capabilities to withstand such events; then margins can be applied initially in the design of the system.

REFERENCES

1. V. L. Streeter and E. B. Wylie, *Fluid Mechanics,* Eighth ed. McGraw-Hill Book Company, New York, 1985.
2. E. F. Obert, *Thermodynamics*, McGraw-Hill Book Company, New York, 1962.
3. H. Schlichting, *Boundary Layer Theory*, McGraw-Hill Book Company, New York, 1955.
4. W. M. Rohsenow and H. Choi, *Heat, Mass and Momentum Transfer*, Prentice Hall, Inc., Englewood Cliffs, New Jersey, 1961.
5. The American Society of Mechanical Engineers, *ASME Steam Tables,* Sixth ed. (computer program included), New York, 1993.
6. International Organization for Standardization, *Units of Measurements,* ISO Standards Handbook 2, Second ed., Geneva, Switzerland, 1982.
7. Crane Company, ''Flow of Fluids Through Valves, Fittings and Pipe,'' Technical Paper No. 410.
8. I. E. Idelchik, G. R. Malyavskaya, O. G. Martynenko, and E. Fried, *Handbook of Hydraulic Resistance*, Hemisphere Publishing Corp., 1986.
9. W. F. Bland and R. L. Davidson (eds.), *Petroleum Processing Handbook,* McGraw-Hill, New York, 1967.
10. A. Stodola, *Steam and Gas Turbines* (translated from Sixth German ed.), McGraw-Hill Book Company, New York, 1927.
11. A. H. Shapiro, *The Dynamics and Thermodynamics of Compressible Fluid Flow*, The Ronald Press Company, 1953.
12. ASME Code B31.1, 1998 ed. Appendix 11, 1.0–1.2, ''Nonmandatory Rules for the Design of Safety Valve Installations.''
13. ASME, *Fluid Meters, Their Theory and Applications*, sixth ed. ASME, 1971.
14. ASME, *Flow Measurements,* ASME Power Test Codes, The American Society of Mechanical Engineers, 1959.
15. S. Ocheduszko, J. Szargut, H. Gorniak, A. Guzik, and S. Wilk, *Zbior Zadan z Termodynamiki Technicznej*, Third ed. (in Polish) PWN, Warszawa, 1970.
16. A. E. Bergles, J. G. Collier, J. M. Delhaye, G. F. Hewitt, and F. Mayinger, *Two-Phase Flow and Heat Transfer in the Power and Process Industries*, Hemisphere Publishing Corporation, 1981.
17. J. M. Delhaye, M. Giot, and M. L. Riethmuller, *Thermohydraulics of Two-Phase Systems for Industrial Design and Nuclear Engineering*, McGraw-Hill Book Company, New York, 1981.
18. R. Roumy, ''Structure des Ecoulements Disphasiques Eau-air: Etude de la Fraction de Vide Moyenne et des Configurations d'Ecoulement,'' CEA-R-3892, 1969.
19. G. F. Hewitt, and D. N. Roberts, ''Studies of Two-Phase Flow Patterns by Simultaneous X-ray and Flash Photography,'' AERE-M 2159, 1969.
20. G. F. Hewitt, and N. S. Hall-Taylor, *Annular Two-Phase Flow,* Pergamon, New York, 1970.

21. T. Oshinowo and M. E. Charles, ''Vertical Two-Phases Flow, Part 1: Flow Pattern Correlations,'' *Can. Chem. Eng.*, vol. 52, pp. 25–35, 1974.
22. G. E. Alves, ''Cocurrent Liquid-Gas Flow in a Pipeline Contactor,'' *Chem. Eng. Prog.*, vol. 50, no. 9, pp. 449–456, 1954.
23. Y. Taitel and, A. E. Dukler, ''A Model for Predicting Flow Regime Transitions in Horizontal and Near-Horizontal Gas-Liquid Flow,'' *AIChE Journal*, 22, pp. 47–55, January 1976.
24. O. Baker, ''Simultaneous Flow of Oil and Gas,'' *Oil and Gas Journal*, vol. 53, pp. 185–190, 1954.
25. K. Goldmann, H. Firstenberg, and C. Lombardi, ''Burnout in Turbulent Flow—A Droplet Diffusion Model,'' Trans. ASME, Ser. C, *J. Heat Transfer*, 83, pp. 158–162, 1961.
26. A. E. Dukler and Y. Taitel, ''Flow Pattern Transitions in Gas-Liquid Systems: Measurement and Modeling,'' *Multiphase Science and Technology*, vol. 2, 1987.
27. R. W. Bjorge and P. Griffith, ''Initiation of Waterhammer in Horizontal or Nearly Horizontal Pipes Containing Steam and Subcooled Water,'' *Journal of Heat Transfer*, vol. 106, pp. 835–840, 1984.
28. T. J. Swierzawski, and P. Griffith, ''Preventing Water Hammer in Large Horizontal Pipes Passing Steam and Water,'' *Journal of Heat Transfer*, vol. 112, TN, pp. 523–524, 1990. (Also a technical paper TP 89-63 of the Stone & Webster Engineering Corporation, Boston, November 1989.)
29. R. T. Lahey, Jr. and F. J. Moody, *The Thermal-Hydraulics of Boiling Water Nuclear Reactor,* ANS, 1977.
30. Aerojet Nuclear Company, ''RELAP4/MOD5, A Computer Program for Transient Thermal-Hydraulic Analysis of Nuclear Reactors and Related Systems,'' User's Manual, ANCR-NUREG-1335, 1976.
31. C. J. Baroczy, ''A Systematic Correlation for Two-Phase Pressure Drop,'' NAA-SR-MEMO-11858, 1966.
32. H. D. Baehr, *Thermodynamik* (in German), Springer Verlag, 1962.
33. W. F. Allen, Jr., ''Flow of Flashing Mixture of Water and Steam Through Pipes and Valves,'' *Trans. ASME*, April 1951.
34. M. W. Benjamin and J. G. Miller, ''The Flow of a Flashing Mixture of Water and Steam Through Pipes,'' *Trans. ASME*, vol. 64, 1942.
35. F. J. Moody, ''Maximum Flow Rate of a Single Component, Two-Phase Mixture,'' APED-4378, October 1963.
36. F. J. Moody, ''Maximum Two-Phase Vessel Blowdown from Pipes,'' APED-4827, April 1965.
37. F. J. Moody, ''Maximum Discharge Rate of Liquid-Vapor Mixtures from Vessels,'' ASME Winter Annual Meeting, Houston, Texas, November 1975.
38. R. E. Henry and H. K. Fauske, ''The Two-Phase Critical Flow of One-Component Mixtures in Nozzles, Orifices, and Short Tubes,'' *ASME Journal of Heat Transfer*, pp. 179–187, May 1971.
39. D. Abdollahian and A. Singh, ''Prediction of Critical Flow Rates Through Power-Operated Relief Valves,'' ANS/ASME/AIChE, Proceedings of the Second International Topical Meeting on Nuclear Reactor Thermal-Hydraulics, vol. 2, pp. 912–918, Santa Barbara, California, 1983.
40. K. H. Ardron and R. A. Furness, ''A Study of the Critical Flow Models Used in Reactor Blowdown Analysis,'' *Nuclear Engineering and Design*, p. 39, 1976.
41. P. Griffith, ''Notes for the MIT Spring Course on Two-Phase Flow,'' 1976.
42. Swedish Trade Office, ''District Heating,'' Materials for the Swedish District Heating Workshops in the United States of America, October 10–20, 1978.

43. General Electric Company, ‘‘Moisture Separator and Reheater Drain Systems,’’ GEK-37949A, 1977.
44. R. S. Burington, *Handbook of Mathematical Tables and Formulas*, Third ed., Handbook Publishers, Inc., Reprinted in 1957.
45. F. J. Moody, ‘‘Prediction of Blowdown Thrust and Jet Forces,’’ ASME Paper 69-HP-31, 1969.
46. E. B. Wylie and V. L. Streeter, *Fluid transients*, McGraw-Hill International, 1978.
47. U.S. Nuclear Regulatory Commission NUREG-0582, ‘‘Water Hammer in Nuclear Power Plants,’’ July 1979.
48. T. J. Swierzawski and D. A. Van Duyne, ‘‘Plant Design and Operating Considerations for Preventing Thermal-Hydraulic Water Hammers,’’ ASME Paper No. 89-JPGC/Pwr-19, presented at the Joint ASME/IEEE Power Generation Conference in Dallas, Texas, October 1989.
49. I. J. Karassik, et al., *Pump Handbook*, McGraw-Hill, Inc., New York, 1976.
50. G. S. Liao and P. Leung, ‘‘Analysis of Feedwater Pump Suction Pressure Decay Under Instant Turbine Load Rejection,’’ *Journal of Engineering for Power*, Trans. ASME, Series A, vol. 94, April 1972.
51. G. S. Liao, ‘‘Protection of Boiler Feed Pump Against Transient Suction Pressure Decay,’’ *Journal of Engineering for Power*, Trans. ASME, Series A, vol. 96, July 1975.
52. G. S. Liao, ‘‘Analysis of Drain Pumping System for Nuclear Power Plants Under Transient Turbine Loads,’’ *Journal of Engineering for Power*, Trans. ASME, pp. 619-627, October 1975.

CHAPTER B9

CEMENT MORTAR AND CONCRETE LININGS FOR PIPE

Richard E. Deremiah, P.E.
Project Manager
Price Brothers Company
Dayton, Ohio

INTRODUCTION

History

It has been known for over 100 years that portland cement mortar and concrete provide considerable protection to embedded ferrous materials against the corrosive effects of soil and water. The most common embedded ferrous material receiving this type of protection has been the steel bars in reinforced concrete. There are literally thousands of reinforced concrete bridges, buildings, parking garages, and other structures in service today. During the 1920s practical methods were developed to apply portland cement mortar linings to cast-iron and steel pipe in the manufacturing plant. In the 1930s a method for applying cement mortar linings to in-situ pipe was developed. Since that time, a significant amount of steel pipe, cast-iron pipe, and more recently, ductile iron pipe has been lined with portland cement mortar. Portland cement mortar linings have become the most common protective measure used for pipe in water and wastewater service. The concrete pressure pipe industry also took advantage of the protective properties of portland cement mortar and concrete during the development of reinforced concrete pressure pipe in the early 1900s and prestressed concrete pressure pipe in the early 1940s. Since the mid-1940s, portland cement mortar and concrete linings for concrete pressure pipe have proven highly successful, with almost all such pipe still remaining in active service. Portland cement mortar and concrete linings are very economical and provide superior corrosion protection.

Terminology and Definitions

Mortar	A mixture of portland cement, fine aggregate (sand), and water

Concrete	A mixture of portland cement, fine aggregate (sand), coarse aggregate (gravel), and water
Tuberculation	The formation of localized corrosion products scattered over the metal surface in the form of knoblike mounds
Passivation	The formation of a tightly adhering and protective chemical oxide film on the metal surface due to the presence of highly alkaline portland cement mortar or concrete
Vertical casting	A method of placing the concrete for a pipe involving the use of a steel inside form and outside form
Centrifugal casting	A method of placing a concrete or mortar lining by centrifugal force inside a revolving cylinder
Radial compaction	A vertical method of placing a pipe's concrete lining by the use of a special revolving packerhead
Pneumatic placement	A method of applying a mortar lining to a surface using compressed air equipment

Application

The interior of unprotected ferrous metal water pipelines can be attacked and damaged by corrosion, which in turn can lead to the formation of leaks, scale, or tuberculation or a combination of these defects. Leaks obviously compromise the structural integrity of the pipeline, resulting in the need for repair or replacement. The buildup of corrosion products in the form of scale or tuberculation can seriously degrade the flow characteristics of the pipeline. If the condition becomes severe enough, repair or replacement is required. For this reason, it is imperative that some form of protection be provided to the ferrous metal surface. Portland cement mortar and concrete protective linings have been found to be a highly effective and economical solution.

Reference Standards

Table B9.1 summarizes the commonly used industry standards which apply to portland cement mortar and concrete linings for pipe.

References

Table B9.2 lists American Water Works Association (AWWA) manuals that provide technical information and guidance for portland cement mortar- and concrete-lined pipe.

TABLE B9.1 Reference AWWA Standards for Cement Mortar and Concrete Linings for Pipe

Number	Title	Remarks
American National Standards Institute (ANSI)/ American Water Works Association (AWWA) C104/A21.4[1]	Standard for Cement-Mortar Lining for Ductile-Iron Pipe and Fittings for Water	For factory-applied mortar linings in ductile iron pipe
ANSI/AWWA C205[2]	Standard for Cement-Mortar Protective Lining and Coating for Steel Water Pipe-NPS 4 (DN 100) and Larger-Shop Applied	For factory-applied mortar linings in steel pipe
ANSI/AWWA C300[3]	Standard for Reinforced Concrete Pressure Pipe, Steel-Cylinder Type	For concrete and mortar linings in concrete pressure pipe
ANSI/AWWA C301[4]	Standard for Prestressed Concrete Pressure Pipe, Steel-Cylinder Type	For concrete and mortar linings in concrete pressure pipe
ANSI/AWWA C302[5]	Standard for Reinforced Concrete Pressure Pipe, Non-Cylinder Type	For concrete and mortar linings in concrete pressure pipe
ANSI/AWWA C303[6]	Standard for Concrete Pressure Pipe, Bar-Wrapped, Steel-Cylinder Type	For mortar linings in concrete pressure pipe
ANSI/AWWA C602[7]	Standard for Cement-Mortar Lining of Water Pipelines in Place-NPS 4 (DN 100) and Larger	For field-applied mortar linings in steel pipe, cast iron pipe, and ductile iron pipe

Corrosion-Preventative Properties of Portland Cement Mortar and Concrete for Lined or Encased Steel and Iron

Portland cement mortar or concrete linings protect steel and iron by three interrelated processes:

1. They form a barrier coating which works to prevent physical damage to the metal surface.
2. They passivate the metal surface. Hydrated portland cement is highly alkaline, with a pH of about 12.5. At that pH, a passivating oxide film forms and is maintained on the metal surface, preventing corrosion.

TABLE B9.2 Reference AWWA Manuals for Cement Mortar and Concrete Linings for Pipe

Title	Remarks
American Water Works Association Manual of Water Supply Practices "M9—Concrete Pressure Pipe"[8]	Covers the four types of concrete pressure pipe and fittings
American Water Works Association Manual of Water Supply Practices "M11—Steel Pipe–A Guide for Design and Installation"[9]	Covers steel pipe and fittings
American Water Works Association Manual of Water Supply Practices "M41—Ductile Iron Pipe and Fittings"[10]	Covers ductile iron pipe and fittings

3. Chemical reactions can occur in the mortar or concrete lining which can make infiltrating corrodants harmless, or they can form compounds that physically block further infiltration of corrodants.

Table B9.3 lists the types of fluids for which cement mortar and concrete linings are suitable and recommended.

TABLE B9.3 Transmitted Fluids for Which Cement Mortar and Concrete Linings Are Suitable

Transmitted fluid
Raw fresh water
Potable water
Raw sewage
Treated sewage
Seawater
Power plant cooling water (both seawater and fresh water)

CONCRETE PRESSURE PIPE AND FITTINGS

Pipe

Pipe manufactured in accordance with the ANSI/AWWA C300,[3] C301,[4] and C302[5] standards is required to have high-strength structural concrete on the inside surfaces of the pipe which, in addition to enhancing the load-carrying capability, provides corrosion protection to the embedded reinforcing elements. All concrete is placed at the factory by vertical casting, centrifugal casting, or radial compaction methods.

Pipe manufactured in accordance with the ANSI/AWWA C303[6] standard is

TABLE B9.4 Concrete Core and Mortar Lining Application and Curing Methods for Concrete Pressure Pipe

		ANSI/AWWA C300	ANSI/AWWA C301	ANSI/AWWA C302	ANSI/AWWA C303
Pipe	Application	Vertical casting or radial compaction, concrete mix temperature must be between 40°F (4°C) and 90°F (32°C)	Centrifugal casting, vertical casting, or radial compaction, concrete mix temperature must be between 40°F (4°C) and 90°F (32°C)	Vertical casting or radial compaction, concrete mix temperature must be between 40°F (4°C) and 90°F (32°C)	Centrifugal casting, concrete mix temperature must be over 40°F (4°C)
	Curing	Accelerated method with steam for 12 hrs minimum, or with water for 12 hrs minimum	Accelerated method with steam for 12 hrs minimum, or with water for 12 hrs minimum	Accelerated method with steam for 12 hrs minimum, or with water for 12 hrs minimum	Accelerated method with steam for 6 hrs minimum, or with water for 24 hrs minimum
Fittings	Application	Hand-placed or pneumatic placement	Hand-placed or pneumatic placement	Hand-placed or pneumatic placement	Centrifugal casting, hand-placed, or pneumatic placement
	Curing	Accelerated method with steam for 12 hrs minimum, with water for 12 hrs minimum, or curing compound per ASTM C309	Accelerated method with steam for 12 hrs minimum, with water for 24 hrs minimum, or curing compound per ASTM C309	Accelerated method with steam for 12 hrs minimum, with water for 12 hrs minimum, or curing compound per ASTM C309	Accelerated method with steam for 6 hrs minimum, with water for 24 hrs minimum, or curing compound per ASTM C309

required to have a mortar protective lining. The mortar is mixed using 1 part portland cement to 3 parts fine aggregate, with enough water added to obtain the necessary workability. The mortar lining is placed at the factory by the centrifugal casting method.

Fittings

The fabricated steel fittings for all four types of concrete pressure pipe (ANSI/AWWA C300,[3] C301,[4] C302,[5] and C303[6]) receive a mortar lining. The mortar is mixed using 1 part portland cement to 3 parts fine aggregate, with enough water added to obtain the necessary workability. These mortar linings are placed at the factory by hand layup, pneumatic placement, or centrifugal casting methods.

Application methods and curing

Table B9.4 summarizes the lining application and curing methods allowed by the various concrete pressure pipe standards. This table also shows the limits on the ambient temperature and the mortar or concrete mix temperature during application of the lining.

Thickness

The thickness of the concrete or mortar linings for concrete pressure pipe vary by pipe diameter and pipe type but are at least 0.50 in (13 mm) thick. In the case of the AWWA C300,[3] C301,[4] and C302[5] pipe, the concrete core, in addition to providing corrosion protection to the steel cylinder or reinforcing mesh, provides resistance to external loads. This is why the thickness can vary with the design parameters. The mortar lining in the AWWA C303[6] type of pipe is primarily used to provide corrosion protection to the steel cylinder. Its thickness does not generally change with the design parameters. The mortar lining for fittings of all concrete pressure pipe types must be at least 0.375 in (9 mm) thick. The primary purpose of the mortar lining in fittings is to provide corrosion protection.

Joint Protection

As shown in Fig. B9.1, a small annular gap between the lining of adjoining pipe sections results after assembly of a concrete pressure pipe steel bell and spigot joint in the field. Depending on the nature of the water being transported and the protective coating applied to the joint rings by the pipe manufacturer, it may be

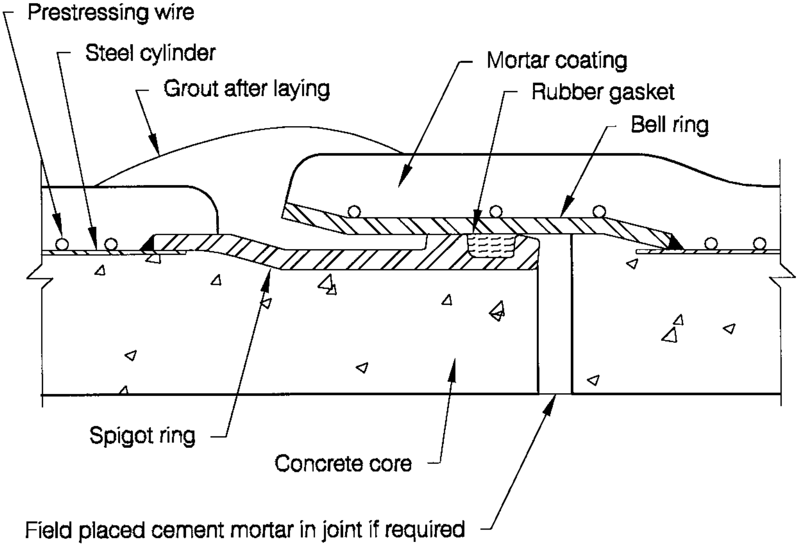

FIGURE B9.1 Mortaring of interior joint recess for prestressed concrete cylinder pipe.

necessary for the installing contractor to mortar this annular recess to protect the steel joint rings. The transmission of aggressive water such as raw sewage or seawater usually requires that the inside joint recess be filled with cement mortar after installation.

DUCTILE IRON PIPE AND FITTINGS

In most cases, ductile iron pipe and fittings are mortar-lined at the factory. Field application of a mortar lining is normally done on older, in-service pipe for rehabilitation purposes. Ductile iron pipe can be supplied with protective linings other than cement mortar lining. Some of the other protective linings may be more appropriate, depending upon the fluid being transported. For instance, ductile iron pipe transmitting raw sewage under gravity flow conditions might be lined with a protective material since sulfuric acid, which may form in the space above the flow, can severely attack portland cement mortar linings and ferrous pipe materials. For most nonaggressive raw water and potable water transmission situations, cement mortar linings are very economical and the most common means of protection.

Table B9.5 summarizes the mortar lining application methods, curing methods, and mix proportions used in the manufacturing plant and in the field for ductile

TABLE B9.5 Cement Mortar Lining Application, Curing, and Mix Proportions for Ductile Iron Pipe

		Applied at manufacturing plant	Applied in the field
Pipe	Application	Centrifugal casting or pneumatic placement	Mechanical placement and troweling
	Curing	Asphaltic seal coat, steam, or water	Water
	Mix proportions	1 part portland cement, not more than 2 parts fine aggregate, and sufficient water to achieve required workability	1 part portland cement to 1–1½ parts fine aggregate, and sufficient water to achieve required workability
Fittings	Application	Hand-placed or pneumatic placement	Hand-placed if not by mechanical placement and troweling
	Curing	Asphaltic seal coat, steam, or water	Water
	Mix proportions	1 part portland cement, not more than 2 parts fine aggregate, and sufficient water to achieve required workability	1 part portland cement to 1–1½ parts fine aggregate, and sufficient water to achieve required workability

TABLE B9.6 Factory-Applied Mortar Lining Thickness for Ductile Iron Pipe and Fittings

Pipe size range	Mortar lining thickness
NPS 3–NPS 12 (DN 75–DN 300)	0.0625 in (1.6 mm)
NPS 14–NPS 24 (DN 350–DN 600)	0.0938 in (2.4 mm)
NPS 30–NPS 64 (DN 750–DN 1600)	0.125 in (3.2 mm)

iron pipe and fittings. Table B9.6 summarizes the factory-applied mortar lining thickness requirements for ductile iron pipe and fittings. Linings with twice the thicknesses shown in Table B9.6 (known as double thickness) can be supplied for extra protection if requested by the purchaser. Table B9.7 shows the field-applied mortar lining thickness requirements for ductile iron pipe and fittings.

TABLE B9.7 Field-Applied Mortar Lining Thickness for Ductile Iron Pipe and Fittings

Pipe size range	Mortar lining thickness for old and new ductile iron
4–10 in (100–250 mm)	0.1875 in (4.8 mm)
11–23 in (280–580 mm)	0.25 in (6.4 mm)
24–36 in (600–900 mm)	0.3125 in (8 mm)
>36 in (900 mm)	0.3125 in (8 mm)

Joint Protection

As with the concrete pressure pipe joint, in the case of factory-applied mortar linings, a small annular gap between the lining of adjoining pipe sections results after assembly of a ductile iron bell and spigot joint in the field. Depending on the nature of the water being transported and the protective coating applied to the joint surfaces by the pipe manufacturer, it may be necessary for the installing contractor to mortar this annular recess to protect the joint. In the case of field-applied mortar lining, the lining is continuous across the joint, and no further work is needed at the joint.

STEEL PIPE AND FITTINGS

The decision regarding where to apply the mortar lining for steel pipe—at the manufacturing plant or in the field—is based on a number of factors including

TABLE B9.8 Cement Mortar Lining Application, Curing, and Mix Proportions for Steel Pipe and Fittings

		Applied at manufacturing plant	Applied in the field
Pipe	Application	Centrifugal casting	Mechanical placement and troweling
	Curing	Steam or water	Water
	Mix proportions	1 part portland cement, not more than 3 parts fine aggregate, and sufficient water to achieve required workability	1 part portland cement to 1–1½ parts fine aggregate, and sufficient water to achieve required workability
Fittings	Application	Hand-placed or pneumatic placement if not by centrifugal casting	Hand-placed if not by mechanical placement and troweling
	Curing	Steam or water	Water
	Mix proportions	1 part portland cement, not more than 3 parts fine aggregate, and sufficient water to achieve required workability	1 part portland cement to 1–1½ parts fine aggregate, and sufficient water to achieve required workability

manufacturer capabilities, pipe diameter, shipping and handling considerations, and field installation conditions. As with ductile iron pipe, steel pipe can be supplied with a range of linings, only one of which is cement mortar lining.

Table B9.8 summarizes the mortar lining application methods, curing methods, and mix proportions used in the manufacturing plant and in the field for lining steel pipe and fittings. Table B9.9 shows the factory-applied mortar lining thickness requirements for steel pipe and fittings. Table B9.10 shows the typical field-applied mortar lining thickness requirements for steel pipe and fittings.

TABLE B9.9 Factory-Applied Mortar Lining Thickness for Steel Pipe and Fittings

Pipe size range	Mortar lining thickness
4–10 in (100–250 mm)	0.25 in (6 mm)
11–23 in (280–580 mm)	0.3125 in (8 mm)
24–36 in (600–900 mm)	0.375 in (10 mm)
>36 in (900 mm)	0.50 in (13 mm)

TABLE B9.10 Field-Applied Mortar Lining Thickness for Steel Pipe and Fittings

Pipe size range	Mortar lining thickness for old steel	Mortar lining thickness for new steel
4–10 in (100–250 mm)	0.3125 in (8 mm)	0.25 in (6 mm)
11–23 in (280–580 mm)	0.375 in (10 mm)	0.3125 in (8 mm)
24–36 in (600–900 mm)	0.4375 in (11 mm)	0.375 in (10 mm)
>36 in (900 mm)	0.5625 in (14 mm)	0.50 in (13 mm)

Joint Protection

In the case of factory-applied mortar linings, it is necessary for the contractor to mortar the inside gap at the joints after installation. Field-welded joints, for instance, will have had the mortar lining held back a few inches at each end to avoid damage due to welding. Figure B9.2 illustrates this example showing a steel pipe lap-welded slip joint. The installing contractor must hand-place the mortar to these uncoated surfaces after welding. This mortar shall be mixed using 1 part portland cement to not more than 3 parts fine aggregate by weight. Use only enough water to obtain the required workability. In the case of field-applied mortar lining, the lining is continuous across the joint, and no further work is needed at the joint.

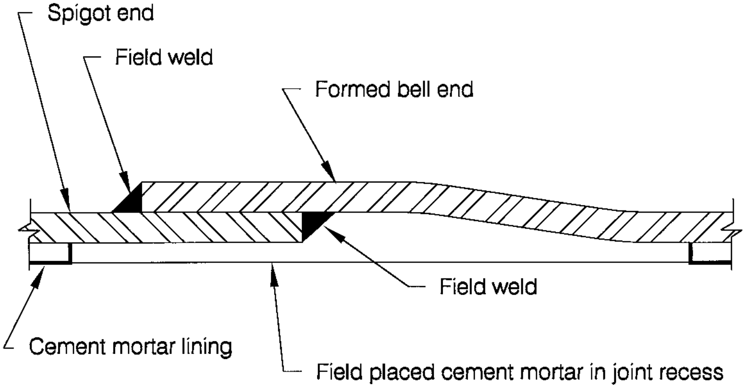

FIGURE B9.2 Mortaring of interior joint recess for field-welded lap joint steel pipe.

MISCELLANEOUS CONSIDERATIONS

Supplemental Protection for Concrete and Mortar Linings

There are some service conditions which can be aggressive to concrete and mortar linings. Two of the most common are:

- Raw sewage: In sewer lines that do not flow full, under certain conditions hydrogen sulfide gas can be generated by biological action in the flow area and then be discharged into the air space above the flow line. In the environment above the flow line, bacteria and moisture can convert this hydrogen sulfide gas to sulfuric acid, which will attack concrete and mortar linings.
- Soft water: Soft water (water with very low calcium carbonate hardness) may attack concrete and mortar linings by leaching minerals from the cement matrix.

If these conditions are expected to occur in the pipe, steps should be taken to protect the concrete or mortar lining or to use another lining that is resistant to these conditions. The pipe manufacturer should be consulted for specific recommendations and availability of supplemental protective measures.

Inspection and Repair

After pipe has left the factory, the mortar or concrete lining may be subject to minor shrinkage cracking, especially in low humidity conditions. The existence of this type of cracking usually does not indicate any structural distress. Once the pipe has been filled with water, the shrinkage process will reverse and minor cracks will close. All pipe and fittings should be carefully inspected upon their arrival on the jobsite. Damaged, loose, or severely cracked concrete or mortar lining should be noted at this time and evaluated for repair. The pipe manufacturer should be consulted for assistance in evaluation and for repair procedures.

Shipping and Handling

Care should always be exercised when lifting and handling concrete- or mortar-lined pipe. Wire rope lifting cables should never be placed through the pipe or fitting and allowed to bear directly against the lining. Any lifting device that bears against the concrete or mortar lining must be suitably padded to avoid damage.

BIBLIOGRAPHY

1. American Water Works Association, *American National Standard for Cement-Mortar Lining for Ductile-Iron Pipe and Fittings for Water,* ANSI/AWWA C104/A21.4-95.
2. American Water Works Association, *Standard for Cement-Mortar Protective Lining and Coating for Steel Water Pipe-NPS 4 (DN 100) and Larger-Shop Applied,* ANSI/AWWA C205-95.
3. American Water Works Association, *Standard for Reinforced Concrete Pressure Pipe, Steel-Cylinder Type,* ANSI/AWWA C300-97.
4. American Water Works Association, *Standard for Prestressed Concrete Pressure Pipe, Steel-Cylinder Type, For Water and Other Liquids,* ANSI/AWWA C301-92.
5. American Water Works Association, *Standard for Reinforced Concrete Pressure Pipe, Noncylinder Type,* ANSI/AWWA C302-95.
6. American Water Works Association, *Standard for Concrete Pressure Pipe, Bar-Wrapped, Steel-Cylinder Type,* ANSI/AWWA C303-95.
7. American Water Works Association, *Standard for Cement-Mortar Lining of Water Pipelines in Place-NPS 4 (DN 100) and Larger,* ANSI/AWWA C602-95.

8. American Water Works Association, *Manual of Water Supply Practices M9–Concrete Pressure Pipe,* 2nd edition, 1995.
9. American Water Works Association, *Manual of Water Supply Practices M11—Steel Pipe: A Guide for Design and Installation,* 3rd edition, 1989.
10. American Water Works Association, *Manual of Water Supply Practices M41—Ductile Iron Pipe and Fittings,* 1st edition, 1996.

CHAPTER B10

FUSION-BONDED EPOXY INTERNAL LININGS AND EXTERNAL COATINGS FOR PIPELINE CORROSION PROTECTION

J. Alan Kehr
Technical Marketing Manager
3M Company
Austin, Texas

INTRODUCTION

Corrosion is a global problem, consuming 3 to 4 percent of gross national product in the developed countries of the world.[1] Selecting economical and effective techniques for minimizing the effects of corrosion is a critical design decision in pipelines as well as in other technologies. Protecting pipeline systems from corrosion is essential to prevent leaks and consequent possible environmental disasters, fire and explosion, personal injury, service disruption, and costly maintenance. Protective measures are critical, yet they represent only a small fraction of the long-term overall cost of a pipeline system. The effectiveness of the corrosion-prevention system has a direct bearing on the design life of the pipeline and significantly influences operational costs such as general maintenance, pumping energy, and capacity upgrades.

This chapter reviews fusion-bonded epoxy (FBE) coatings, three-layer polyolefin coatings which utilize FBE as the primary corrosion coating, and FBE linings as solutions for mitigating external and internal pipeline corrosion.

Higher operating temperatures in modern pipeline systems and a host of hostile environmental conditions during transportation, installation, and use require a new generation of FBE-based world-class coatings to protect the pipe exterior.[2] The FBE primary coating controls the steel/coating interface where corrosion begins. Advanced field application technology provides comparable-quality same-system coatings for the girth weld.

Higher levels of hydrogen sulfide (H_2S), carbon dioxide (CO_2), salt water, and higher operating temperatures aggravate internal pipe corrosion. Corrosion-resistant alloys, inhibitors, and linings provide solutions for internal corrosion problems. FBEs have been formulated to operate in these very harsh service environments. These internal linings provide additional advantages besides corrosion prevention for the pipeline system. For example, they[3]:

- Improve fluid flow for higher throughput and reduced energy requirements
- Improve pipe inspection prior to installation
- Prevent corrosion during storage
- Facilitate pipeline cleaning and water disposal after hydrostatic testing

BACKGROUND, HISTORY, AND ADVANTAGES OF FBE LININGS AND COATINGS

Fusion-bonded epoxy is a one-part, heat-curable, thermosetting epoxy resin powder. The application of heat causes this material to melt and adhere to a metal substrate. The resulting coating contains no trapped solvents, exhibits excellent adhesion qualities, and provides a tough, smooth finish that is resistant to abrasion and chemicals. FBEs have been in use since 1960 to protect pipelines from corrosion. It is estimated that over 50,000 miles (80,000 kilometers) of FBE-coated pipelines are installed around the world.

FBE is the favored primary coating for three-layer polyolefin corrosion coatings. In this technology, it has been in use since 1979.

FBE is currently specified in the oil, gas, and water pipeline industries. It has been used as an internal lining in desalination plants in Australia and the Middle East, and on gas transmission pipelines.[5] It has been in use to protect downhole tubing for over 20 years.[14] More recently, it has been used in sour crude pipelines.[4]

In the water industry, FBE provides a thinner coating compared to concrete, enabling smaller pipe sizes and reduced bulk and weight during handling and installation of pipe. The smooth, hard coating provides reduced friction compared to uncoated or concrete-lined pipe. This results in more efficient flow, reduced energy costs, and lower installed pump or compressor investment. It has been used on valves, pumps, and fittings in water districts for both water and sewer systems in California for nearly 30 years. It is in use protecting brine-pit piping systems, solving erosion corrosion problems as well as general corrosion.[5] FBE has been used in high-sand-content seawater cooling pipework for 10 years and these installations are still in excellent condition. It has been applied to valves and pipework handling seawater for the U.S. Trident submarine program and has a 20-year history in the pump manufacturing industry, effectively protecting against cavitation and slurry damage. In the United Kingdom, FBE has protected drinking water pipework since 1978, with coatings on over 2,153,000 ft^2 (200,000 m^2) of piping.[6] Specific formulations meet the drinking-water requirements of many countries.

There are reports of 6 to 18 percent flow efficiency improvements in gas transportation when using FBE internally-lined pipe as opposed to bare steel pipe. Using the 6 percent figure on an 800-mile (1300-kilometer) NPS 30 (DN 750) pipeline with a discharge pressure of 960 psig (6600 kPa) and a compressor station every 80 miles (130 kilometers), the potential savings are over $4 million in compressor equipment cost, plus an annual energy savings of about $1 million.

TERMINOLOGY

Cathodic Disbondment. Loss of coating adhesion around a holiday (hole in the coating) when the coated pipe is provided with cathodic protection. The phenomenon of cathodic disbondment happens with all organic coatings.[7]

Cathodic Protection. When external pipeline corrosion takes place, there are anodic and cathodic areas on the surface. In the anodic areas (the corroding sites), current flows from the pipeline steel into the surrounding electrolyte (water in the soil). Where the current flows from the electrolyte to the pipeline, the area is cathodic and does not corrode. An external source of current flowing to the pipe will make it cathodic and will prevent corrosion. This method of corrosion prevention is called cathodic protection.[8,9]

Cathodic Shielding. Cathodic shielding can take place when an electrically insulating barrier prevents current flow from reaching the pipe. An example is disbonded coating that allows water to come in contact with the pipe, but does not allow cathodic protection current to passivate the pipe surface. Current flow under the coating will depend on the resistance of the water there and, after a short distance, will be insufficient to protect the pipe from corrosion.[8]

Coating. Application of FBE on the internal or external surface of a pipe or other metallic equipment. When applied on the internal surface, it is referred to as a *lining*, and, when applied to an external surface, it is called an *external coating*.

Cure Time. The time required to complete the heat-induced crosslinking reaction to the point where the coating provides the acceptable level of performance.[10]

DGEBA. Diglycidyl ether of bisphenol A, a widely used solid epoxy resin employed in the manufacture of fusion-bonded epoxy pipe coatings.[20]

FBE. Fusion-bonded epoxy.

Fusion-Bonded Epoxy. A one-part, heat-curable, thermosetting epoxy-resin powdered-coating material normally comprised of an epoxy and a curing agent, plus other materials to provide a tough, well-adhered coating. The powder is sprayed onto a hot pipe where it melts, flows, and cures.

Gel Time. The time interval during which the coating material converts from a molten liquid to a solid.

Holiday. A discontinuity, or hole, in the coating that allows an electric charge to pass at a specific voltage.[32]

Joint. 1. A length of pipe. 2. The welded area connecting two pieces of pipe (i.e., field joint).

Nested. Rows of pipe that rest directly on each other in storage.

NSF. National Sanitation Foundation (U.S. certification agency for potable drinking water systems).

Powder Coating. See fusion-bonded epoxy.

Soil Stress. Damage to a pipeline coating caused by wet/dry cycling of the soil and/or pipe movement caused by temperature change.

Stacked. Rows of pipe placed on each other in storage, but with intervening layers of stripping (normally wood).

Stress-Corrosion Cracking. In the presence of stress, corrosion cracks can initiate.[9] The incidence of failures on pipelines have been in cathodically protected areas of disbonded coatings where liquids at a pH of 9 to 11 and carbonate/bicarbonate solutions have collected[11] between the coating and the surface of the steel.

Three-layer Coating. External pipe coating composed of an epoxy primary corrosion-protection layer, a tie-layer of modified-polyolefin adhesive, and an overcoating of polyolefin.

TYPES OF ORGANIC PIPELINE PROTECTION LININGS AND COATINGS

Internal Linings

Internal pipeline linings are commonly divided into three categories: concrete, rubber, and plastics.

Concrete Linings. There are several factors to consider beside the initial cost per unit area of coating application.[12] Of particular interest are the effects of the concrete liner on the pipe diameter, and its roughness. A concrete lining is thicker than FBE lining, and consequently the concrete-lined pipe has a smaller inside diameter than FBE-lined pipe (Refer to Chapter B9 for a detailed discussion of concrete-lined pipe.) Plastic linings generally reduce the diameter by 40 mils (1000 microns) or less. Thus, the use of plastic linings can result in utilizing a smaller pipe size while retaining the same throughput. Refer to Chapter B12 for details on plastic lining. Another major advantage of using plastic linings instead of concrete is the reduction of roughness.

Rubber Linings. Refer to Chapter B11 for detailed discussion of rubber lined piping.

Plastic Linings. Internal plastic linings have been used in oil well downhole tubulars for almost 50 years. See Table B10.1 for material comparisons.[13]

> *Phenolic resins*, formed by the chemical reaction between phenol and formaldehyde, have the longest history.[14] They provide good performance at high service temperatures and high pressures. Phenolic-based linings have low permeability to water vapor, and good carbon dioxide, solvent, and abrasion resistance. Low impact resistance, low flexibility, and moderate caustic resistance limit their usage. They are gas-permeable and normally are not applied beyond 5 to 8 mils (125 to 200 microns) in thickness. Phenolic liquids must be layered in multiple coats to achieve the necessary thickness and to facilitate solvent removal.
>
> *Urethane linings* have experienced some usage over the last few years because of improved abrasion resistance and flexibility. However, recent improvements in other systems, such as FBE, have limited urethane's growth in the marketplace.
>
> *Nylon powder linings* provide good flexibility, abrasion, saltwater, and impact resistance, but suffer from limited temperature resistance, hydrogen sulfide sensitivity, and acid resistance.
>
> *Modified epoxy-phenolic lining systems* provide improved flexibility and caustic resistance compared to phenolics but exhibit reduced operating temperature ranges and acid resistance. They also tend to be permeable to water.

TABLE B10.1 Types of Organic Internal Linings

Type	Advantages	Disadvantages	Upper temperature	Single coat	Type
Phenolic	• Low water vapor permeability • Good carbon dioxide, solvent, and abrasion resistance	• Low impact • Low flexibility • Moderate caustic resistance	392°F (200°C)	N	TS L
Urethane	• Good abrasion • Flexible • Smooth, resists paraffin build-up		220°F (105°C)	Y	TS L
Nylon	• Good abrasion • Flexible • Good salt-water resistance • Resists installation handling damage	• Low hydrogen sulfide and acid resistance	220°F (105°C)	Y	TP P
Epoxy-phenolic	• Improved flexibility and caustic resistance compared to phenolic • Resists depressurization	• Increased water-vapor permeability • Reduced acid resistance compared to phenolic	250°F (120°C)	N	TS L
Epoxy-novolac—FBE	• Improved flexibility and caustic resistance compared to phenolic • Resists depressurization	• Increased water-vapor permeability • Reduced acid resistance compared to phenolic	300°F (150°C)	Y	TS P
Epoxy—FBE	• Flexible • Good salt-water resistance • Resists installation handling damage	• Increased water-vapor permeability • Reduced acid resistance compared to phenolic	250°F (120°C)	Y	TS

Abbreviation definitions:

Single Coat: Y = yes, the coating can be applied in a single pass. For example, FBE coatings are frequently applied at a coating thickness of 25 mils (625 microns). N = No, materials like phenolics are applied in several layers of 25 to 50 microns (1 to 2 mils).

Type: TS = thermoset coating system (there is a chemical reaction which causes the coating to cure and take on final properties). TP = thermoplastic. L = liquid. P = powder.

FBEs show improved flexibility and are saltwater, carbon dioxide, and caustic resistant. Like modified epoxy-phenolic liquid systems, they are generally limited to an operating temperature of 250°F (120°C). New chemistry is improving the operating-temperature and chemical-resistance windows for FBE linings. For best performance, the thickness is normally 16 mils (400 microns) and above. The coating is applied in one operation; FBEs have no volatile organic compounds (VOCs). In many cases FBE coatings are displacing other lining types.

External Coating

There are a number of factors to consider when selecting an external pipeline coating.[15,16] These include:

- Physical and chemical stability
- Resistance to soil stress
- Adhesion and resistance to impact
- Resistance to cathodic disbonding

Types of External Pipe Coatings. This subsection reviews the available external pipe coatings and their capabilities on the just-noted factors:

Polyethylene tapes usually consist of a primer followed by adhesive backed polyethylene tape spiral-wound around the pipe. Alternatives include two separate tape layers. Tape is often applied over the ditch over a wire-brush-cleaned surface. Tapes provide economy of materials but have poor resistance to installation damage. Tape-coated pipes are susceptible to soil stress and can insulate the pipe from cathodic protection[15] current, thus creating a corrosive environment. They are also vulnerable to corrosion at the weld seam and at the tape overlap.

Extruded polyethylene over mastic has good resistance to installation and handling damage, but can be affected by shrinkage and soil stress. Currently, it is available for only up to NPS 24 (DN 600) diameter pipe[17] because of application-process limitations.

Waxes and vinyl tapes require simple application technology and provide resistance to water permeation, but they are susceptible to damage due to cathodic disbondment and have a very limited operating temperature range.

Asphalt enamels also have the advantage of utilizing simple technology. However, they soften at higher operating temperatures and have poor resistance to moisture and soil stress.[17] Field studies have also shown that they have a tendency to cathodically shield the pipe,[15] which means that corrosion can take place even though the cathodic-protection system appears to be functioning normally. There is evidence that stress-corrosion cracking of the steel pipe can take place under enamel coatings.

Coal-tar enamels show good resistance to cathodic disbondment, which means moderate increases in cathodic-protection current over time. However, impact resistance[18] is poor, which leaves pipes vulnerable to handling damage and storage problems. Soil-stress resistance is poor,[17] resulting in potential coating loss during operation.

Three-layer polyolefins combine the good oxygen barrier properties of FBE with the good moisture-penetration resistance of polyolefin. The thick polyolefin layer also provides superior resistance to mechanical handling damage. Polypropylene has good high-temperature properties. There is a theoretical concern about cathodic shielding, but 20 years of satisfactory field performance belie that concern.

Fusion-bonded epoxy coatings have good chemical resistance, do not shield the pipe from cathodic protection, and there are no known cases of stress-corrosion cracking of FBE coated pipe. The coating is tough, but when installation damage occurs it is readily detected and repaired. Field application of FBE coating on girth welds provides the same protection as the plant-applied materials. Two-

TABLE B10.2 Types of External Pipe Coating Systems

Material	Advantages	Disadvantages	Temperature ±2°F (5°C)
Polyethylene tapes	Simple application in field.	Cathodic shielding—SCC†. Very poor resistance to soil stress.	95°F (35°C)
Extruded polyethylene	Good resistance to handling and installation damage. Self-healing adhesive.	Limited to NPS 24 (DN 600) or smaller pipe. Limited at elevated temperatures under soil stress.	105°F (40°C)
Wax/vinyl tapes	Simple technology. Low moisture permeation.	Very sensitive to temperature. Prone to cathodic disbondment.	85°F (30°C)
Asphalt enamels	Simple technology.	Poor resistance to moisture and soil stress. Very sensitive to temperature.	95°F (35°C)
Coal-tar enamels	Good corrosion resistance.	Low soil stress resistance. Properties sensitive to temperature.	120°F (50°C)
Fusion bond epoxy	Good corrosion resistance. Does not shield CP* systems. No evidence of SCC†.	Moisture absorption and permeation. Susceptible to cathodic disbondment.	175°F (80°C)
2-layer FBE	Good corrosion resistance. Good resistance to handling and installation damage.	Moisture absorption and permeation.	230°F (110°C)
3-layer polyethylene	Good corrosion resistance. Good resistance to handling and installation damage.	Cathodic shielding concern	175°F (80°C)
3-layer polypropylene	Good corrosion resistance. Good resistance to handling and installation damage.	Cathodic shielding concern	250°F+ (120°C+)

* CP: Cathodic Protection
† SCC: Stress-Corrosion Cracking

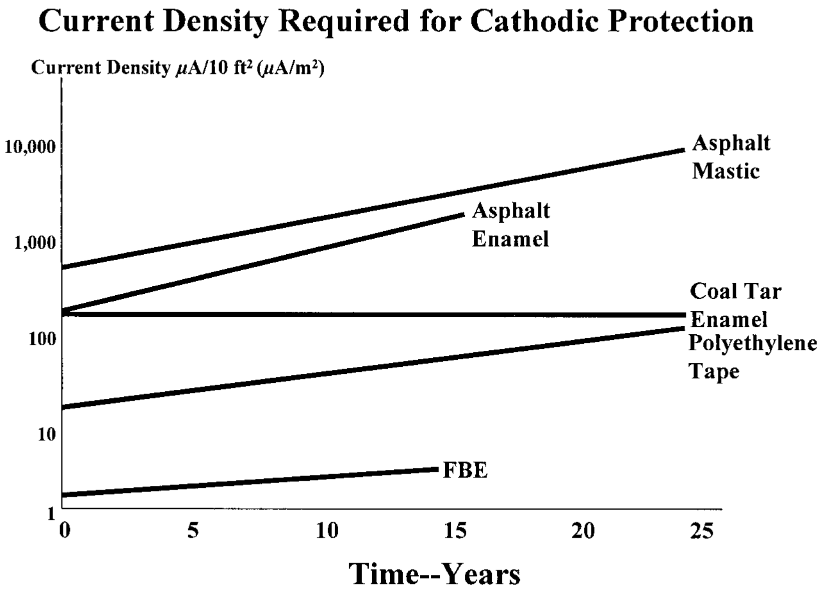

FIGURE B10.1 Lifetime pipeline costs are significantly impacted by the amount of cathodic protection current required to protect the pipe. FBE coatings provide an operational cost savings.[15]

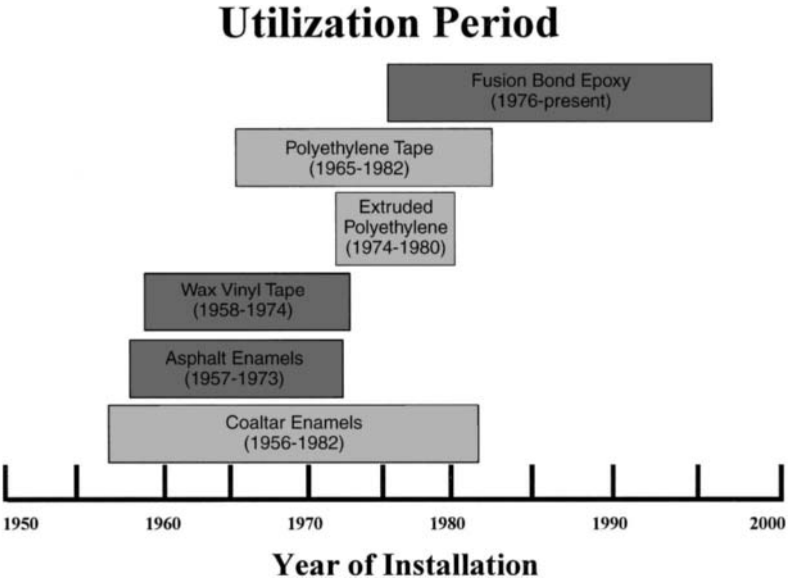

FIGURE B10.2 Progression of coating solutions for external pipeline corrosion mitigation for a major North American gas transmission company.[15]

layer FBE systems have recently entered the marketplace. They allow combining specific performance properties of the two layers to meet pipeline requirements. For example, the chemistry of the primary coating can be designed for minimal cathodic disbondment, and the topcoat can be designed to enhance impact resistance and high-temperature operating performance.

See Table B10.2 for more comparison information; also see Fig. B10.1 for cathodic protection current density requirements for coating types. See Fig. B10.2 for the coating-systems technology migration of a major Canadian gas-transmission company.[15]

FBE CHEMISTRY

During the development of coating and lining formulations and manufacturing processes, two key factors must be balanced:

- Requirements of the application plant that will apply the internal lining or external coating material
- Performance requirements of the end user, the owner of the pipeline system

If the world's best lining or coating cannot be applied efficiently, economically, and consistently, it has little value. The opposite is also true.[19]

To assist the "understanding" component of the selection process, this section provides a brief overview of fusion-bonded epoxy chemistry to illustrate the performance properties available and the tradeoffs required. It reviews raw materials used, and their effects on properties important to the applicator and the end user.

FBE Raw Materials

From a chemist's viewpoint, epoxies are exciting to work with because of the wide range of properties that can be derived from the selection of available materials. Materials selection and chemistry significantly affect product performance:

- Resins
- Curing agents or hardeners
- Catalysts and accelerators
- Fillers and pigments
- Additives

Resins. The term epoxy[20] comes from the three-member ring available for reaction (see Fig. B10.3). While there are several different types of epoxy resins, the two most frequently used in FBE linings and coatings are based on either diglycidyl ether of bisphenol A (DGEBA) or novolac chemistry. DGEBA resins provide excellent adherence, good mechanical and electrical properties, and good

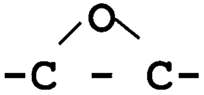

FIGURE B10.3 Epoxy ring.

resistance to chemicals. Novolacs provide a highly crosslinked coating that means improved elevated temperature performance and chemical resistance with reduced flexibility.

To be useful in powder coatings, an epoxy resin must be of sufficient molecular weight to be a brittle solid at ambient temperature, but low enough in molecular weight to melt, flow, and wet out the substrate at application temperatures.

Curing Agents. To achieve desired properties, the epoxy resin must react with a curing agent or hardener. Curing agents can be divided into three classifications:

- Bases
- Acids
- Catalytics

Basic curing agents include materials such as aromatic amines, aliphatic amines, amides, and dihydrazides. Acidic hardeners include organic anhydrides, organic acids, and phenolics. Catalytic hardeners cause the homopolymerization of the epoxy resin and include such materials as Lewis acids and tertiary amines.

Each curing system provides unique properties and is chosen carefully with requirements of both the pipeline owner and the applicator in mind. Crosslink density significantly affects flexibility and chemical resistance. Acidic cures typically result in materials with improved resistance to low pH environments. Conversely, basic cure coating systems are more resistant to high-pH, caustic environments. The selected curing agent should be latent at room temperature and highly reactive at application temperature.

Catalysts. Catalysts, or accelerators, can be divided into two categories—Lewis acids and Lewis bases. Many of the curing agents previously listed will act as catalysts for other curing systems. Others include imidazoles, BF_3 complexes, quaternary ammonium compounds, inorganic metal salts, phenols, and sulfones.

Catalysts serve two functions. First, they direct the curing mechanism of the lining or coating system. For example, the final properties of an anhydride-cured FBE system catalyzed with a base, such as an amine, will be significantly different from the same system catalyzed with a metal salt. Second, they control the speed of the curing reaction. Selection of the catalyst system is critical to final performance properties.

Pigments and Fillers. Normally pigments are employed to impart a specific color, but they can also be reactive. Fillers provide both functional and economic improvements to lining and coating systems. They can impart improved flow control, chemical resistance, and hot-water resistance, but usually at the expense of flexibility. Examples include carbonates, sulfates, and silicas frequently seen in paint formulations.

While optimization of these materials is critical to coating performance, the formulator is most often able to provide unique properties through the development and use of additives. These additives are used to control the melt and flow characteristics of the lining or coating, improve adhesion performance, water permeation, and handling characteristics of the powder material and resulting coating.

Three-Layer Systems

Three-layer external pipe-coating systems utilize FBE as the primary corrosion coating. Polyolefins possess good mechanical properties but have no polarity to

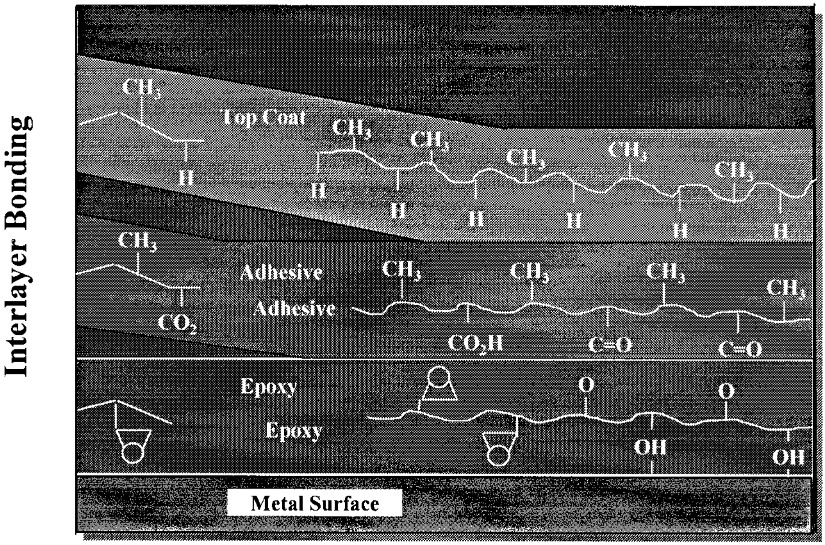

FIGURE B10.4 FBE is the primary corrosion coating for the three-layer pipe coating system and provides adhesion to the steel. The modified polyolefin tie-layer adhesive reacts with the epoxy to provide a bond. The topcoat provides a moisture barrier and impact resistance and adheres well to the tie layer.

"wet" and adhere to steel. Combining the "polar" epoxy with the "nonpolar" polyolefin combines the positive properties of both materials. An intermediate adhesive layer of modified polyolefin achieves the bonding of the epoxy to the polyolefin. This adhesive contains polar groups grafted onto the carbon-bond spine of the polyolefin. The polar groups react with the epoxy. The polyolefin is compatible and bonds to the unmodified topcoat of polyolefin. See Fig. B10.4.

CHOOSING A FUSION-BONDED EPOXY COATING OR LINING

Application Properties

Powder Handling Characteristics are critical and must be compatible with the application process, whether it is electrostatic spray, flocking, or fluidized bed. Key elements affecting these properties are particle size distribution, electrostatic charging susceptibility, and softening point of the powder.

Cure, gel, and flow characteristics must be designed to fit the applicator's plant, or, conversely, the plant must be designed to fit the application characteristics of the powder coating. Gel and cure times can normally be adjusted without adversely affecting the performance properties of the lining or coating.[21] A lengthy gel time may cause the coating to sag, and the cure time may be too long. Undercure results in an insufficiently crosslinked coating that is brittle, easily damaged, and has poor chemical resistance. If the gel time is too short, there will be inadequate wet-out and flow, resulting in a rough coating with increased probability of holidays. Some powders cure quickly using the residual heat of the steel. Others take longer to cure and require postbaking.

Stability of the powder can affect costs from the standpoint of storage environmental control. While FBE curing systems are normally latent, a chemical reaction slowly occurs at room temperature. This chemical reaction is called *advancing*. If the powder advances too far before usage, lining and coating application and performance will suffer.[22]

Environmental Conditions and Field Performance

Internal Lining. Proper selection of a lining system means balancing chemical resistance and flexibility characteristics of the lining so that it can perform satisfactorily in adverse chemical, pressure, and temperature environments, yet meet the installation requirements.[13]

Judicial selection means gathering the facts and systematically evaluating the lining choices. All coating formulations are compromises, having clear advantages and distinct limitations. The biggest tradeoffs are normally between flexibility,

TABLE B10.3 Autoclave Testing (Internal Lining Selection Depends on Environment)

Temperature	200°F (93°C)	200°F (93°C)	275°F (135°C)
Duration (hours)	16	24	24
Liquid phase	5% NaCl Brine	15% HCl	34% Brine 33% Kerosene 33% Toluene
Gas phase	5% CO_2 95% Methane	Air	25% CO_2 75% Methane
Discharge	Cool for 4 hours then rapidly release pressure	Force-cool to ambient, release pressure over 5-minute period	Release pressure over 5-minute period at test temperautre
Results			
Lining A	Use	Don't use	Don't use
Lining B	Use	Use	Don't use
Lining C	Use	Use	Use
Lining D	Use	Use	Use

Lining A: Bisphenol-A type epoxy with NSF listing for potable drinking water
Lining B: Modified bisphenol-A type epoxy for harsh environment
Lining C: Novolac epoxy
Lining D: Novolac epoxy designed for girth-weld field application. Requires no primer or post cure.

application speed, and chemical/temperature resistance. The key is to find the most flexible system that can be economically applied in the application plant that gives optimum performance in the required operating environment.

Temperature and pressure combine to degrade lining performance and survival. Most coatings are permeated to some degree by hydrogen sulfide and carbon dioxide, which can cause blistering when pressure is released. This can also lead to premature failure of the internal lining.[23]

While field experience data is the most useful basis for decision making, it is often not available. To solve this dilemma, chemical resistance tests, such as autoclave testing, can be used. For example, in Table B10.3, for a high or variable carbon dioxide content environment, Lining A, a Bisphenol-A type epoxy with certification for potable water use in the United States, will work well in mild environments and relatively low temperatures. However, for more aggressive environments, such as higher temperatures and high levels of CO_2 or H_2S, a highly crosslinked novolac epoxy such as Lining C will be required.

Table B10.4 also shows examples of the compromises that must be considered. These compromises include the amount of flexibility required for pipeline installation and the equipment and facilities availability in the applicator's plant. For example, Lining A is relatively easy to apply since it requires neither a postcure nor a priming station. It is suitable for installation in a terrain that requires field bending. Lining B requires more extensive application facilities when used in a high-CO_2 environment, since proper application includes both the use of a primer and a postcure to achieve optimum properties.

TABLE B10.4 Application and Handling Characteristics of Different Types of Lining (Internal Lining Selection Depends on the Environment, Required Handling Characteristics, and Application Characteristics of the Material)

Lining	Elongation %	Primer required	Post cure	Wire line*	NSF†	Test‡
Lining A	6	No	No	+	Yes	Water
Lining E	4	No	Yes	++	Yes	Hot water
Lining E	4	Yes	Yes	++	No	3% CO_2
Lining B	6	No	Yes	++	No	3% CO_2
Lining B	6	Yes	Yes	++	No	100% CO_2
Lining F	1.5	No	No	+++++	No	100% CO_2

Lining A: Bisphenol-A type epoxy with NSF listing for potable drinking water (See Table B10.3)
Lining E: Modified Bisphenol-A type epoxy with NSF listing for potable drinking water
Lining B: Modified Bisphenol-A type epoxy for harsh environment (See Table B10.3)
Lining F: Novolac epoxy designed for wire-line damage resistance

* Wire Line: For downhole tubing, equipment is moved via a cable, or wire line. Resistance to damage by the wire line is based on a 1-to-5 scale with +++++ being the best rating.

† NSF: National Sanitation Foundation. U.S. certification agency for potable drinking water systems.

‡ Testing: An increase in either the temperature or level of CO_2 creates a more hostile environment for internal linings.

Primers. Phenolic based primers have been used for years with excellent performance. However, they have three significant drawbacks:

- Requirement of closely controlled cure before topcoat application
- Postcure
- Emissions from the volatile organic content of the formulations.

Water-based primer systems eliminate these problems and are suitable for less severe internal-pipe environments. One such system has been in use in brine and saltwater source-injection wells for over a year.[24]

FBE APPLICATION PROCESSES

Single-Layer Process

While the FBE application process is straightforward, attention to details is important. The steps are:

- Clean
- Apply primer or surface treatment (if specified)
- Heat
- Apply FBE
- Cure
- Cool
- Inspect

Cleaning. For most applications, blast cleaning of the metal substrate surface using hardened steel grit to a near-white-metal blast according to NACE No.2/SSPC-SP10,[25] free of visible contamination and no more than 5 percent staining is sufficient. For internal linings in severe environments such as downhole tubing, the pipe must first be thermally pickled at a temperature of 725°F (385°C) followed by a NACE No. 1/SSPC-SP 5 blast cleaning with hardened steel grit or suitable mineral abrasive.[13]

For external coatings, the blast-cleaned surface is often washed with a phosphoric acid cleaner to remove blast debris and contaminants, such as salt, from the substrate. A chromate treatment is sometimes used to remedy coating deficiencies or to allow a wider window for the pipe-coating application temperature.

Priming. In highly corrosive internal-pipeline conditions with high pressure, high temperature, and carbon dioxide or hydrogen sulfide, a primer is required[26] for the lining. For both phenolic- and water-based systems, the primer is applied prior to the heating step. In the case of a phenolic primer, the preheat drives out the volatile organic solvents and causes a partial cure before FBE application. Control of the prime-cure step is important to coating system performance. If applied too hot or allowed to fully cure before application of the FBE, there will not be proper adhesion between the two.

Water-based primers require an application temperature lower than the boiling point of water. Flash rusting can be avoided by preheating the pipe to about

150°F (66°C) and/or using an oil-free, compressed-air drying step immediately after application. If induction coils are used for heating, the primer should be nearly dry before entering coil.

Heating. The pipe is then heated to the application temperature range specified by the coating material supplier—usually approximately 350°F (177°C) for internal linings; 400°F (204°C) for three-layer external coatings; and 450°F (232°C) for standalone FBE external coating.

Applying. Depending on the configuration of the component to be coated, all commonly used application techniques are applicable:

- Fluidized bed—the powder is aerated in a chamber via air flow; the hot component is dipped into the "fluidized" powder.
- Flocking—powder is sprayed onto the component via compressed air.
- Electrostatic spray—powder is sprayed onto the preheated component with compressed air. An electrostatic charge is imparted to increase powder-usage efficiency.

Curing. When some FBE systems are applied to sufficiently heavy-walled articles [usually ⅛ in (3.2 mm) wall thickness or heavier], the heat retention of the metal provides the thermal energy required to achieve cure—the thermosetting chemical reaction that provides the required properties of the coating or lining. In that case, facilities for postcure are not necessary. Systems utilizing a phenolic primer generally require a postcure heating step to complete the chemical reaction of the primer.

For water-based primer systems, postcure conditions are determined solely by the fusion-bonded epoxy. The temperature of the postcure step is determined by the lining system requirements and is usually in the same range as the application temperature. For metal that is likely to outgas, such as cast-iron, it is important to postcure at a temperature well below the application temperature. For example, the component may be lined at 400°F (204°C) and postcured at 350°F (177°C). In extreme cases, a preheating outgassing step may be needed—several hours at 660 to 725°F (350 to 385°C) before cooling to application temperature and applying the lining.

Cooling and Inspecting. Cooling is achieved either by spraying the outside and/or inside of the pipe with water or by simply allowing it to dissipate the heat in ambient air. Appearance, holiday inspection,[27,28] and thickness[29] checks usually follow.

Three-Layer Application

The plant application of three layers of external coating material is obviously more complicated than a single coating, but is not fundamentally different in approach. The goal is to get three layers which are well-adhered to each other and to the steel substrate. Time management is the key to the coating process. The adhesive needs to be applied while the epoxy still has free polar sites available to bond with

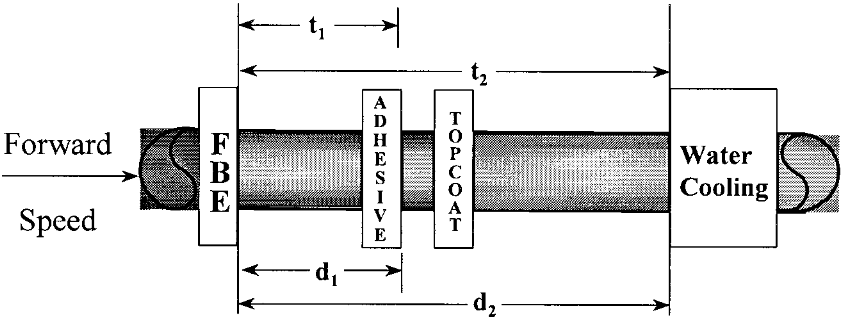

t_1 = Gel Time of FBE (Sec)
t_2 = Cure Time of FBE (Sec)
d_1 = Forward Speed x t_1
d_2 = Forward Speed x t_2

FIGURE B10.5 Effective time management during the application process is critical to coating performance.

the adhesive layer, but sufficient gel strength to maintain damage-free continuity (see t_1, the gel time, in Fig. B10.5).

The FBE must be cured by the time the water cooling reduces the pipe temperature below the point where the chemical reaction effectively stops. The overriding performance consideration is the full cure of the epoxy. It is the epoxy primary coating that is elemental to the long-term corrosion protection of the coating system.

QUALITY ASSURANCE

Quality assurance requires systems, processes, and monitoring to ensure successful production. Each coating system, internal lining, FBE external coating, or three-layer external coating has many similar requirements and a few unique unto itself. All require careful inspection of the in-bound pipe for determination of fitness for use and suitability for lining or coating. This includes detection of oil or salt contamination that can be spread during the cleaning process to affect otherwise coatable pipe. It also includes searching for metal defects that will be covered by the coating. One of the advantages of FBE linings or coatings is that they are relatively thin and readily show surface defects in the steel that may cause future problems.

All processes require careful attention to and monitoring of surface preparation and surface treatment or priming steps. The preheating system must bring the pipe to the proper uniform application temperature without contaminating the surface. Proper attention must be paid to the time management aspects of the application process to ensure adhesion to the steel and/or between primer and layers of the lining or coating system.[30]

For internal linings, final inspection is mainly visual, and blisters, sags, runs, or drips are identified. Also, film thickness and holiday inspections are made. For severe service, the lining must be holiday-free.[13]

FBE external-coating inspections are extensive and include destructive tests as well as evaluation of the coating on the pipe.[31,32] Nondestructive tests include visual examination, anchor profile measurements, measurement of thickness, and holiday inspection. Destructive tests require cutting a ring sample and performing bend, cathodic disbondment, cross-sectional porosity, impact, interface contamination, thermal characteristics (differential calorimetry evaluation for cure), hot water immersion, and adhesion. A recent survey[33] showed that the tests most important to the pipeline owner companies were pipe-surface cleanliness, holiday detection, coating thickness, and pipe-surface anchor profile.

For three-layer external coating systems, there are provisions for many of the same tests as in the quality assurance testing for FBE,[34] such as cathodic disbondment. Most reliance beyond visual inspection and process control is based on a peel-adhesion test to ensure bonding between the coating layers and to the steel substrate.

JOINT SYSTEMS COATINGS AND LININGS

To ensure corrosion protection, it is essential to provide quality lining or coating on the girth welds and joints that is equal to that on the main pipe body. Girth welds require special systems because of the potential for heat damage to the lining by the welding process. Several systems are available for coating the girth-weld area. Coupling systems are also available that either eliminate the welding process or protect the internal lining from heat damage.

The ideal system allows the use of the same lining or coating on the girth welds as on the remainder of the pipe. The process[5] is essentially the same as the plant lining or coating process, except that it is done in the field. The rest of this section describes the various systems and processes available for protection of the joint area.

Internal FBE Lining

The development of primerless linings that do not require postcure, yet provide the required chemical, temperature, and pressure resistance properties, has been a significant improvement in the process. Robots are available to do the operations inside the pipe.

Cleaning. The cutback area is left bare by the coating plant. Sand- or grit-blast the surface to white metal prior to welding.

Welding. Weld, X-ray (if specified), and accept for lining.

Postweld cleaning. Blast-clean to remove flux. All blast media must be removed before beginning the internal lining process.

Heating. Use an induction coil placed on the pipe exterior to bring the weld area up to lining temperature—normally in the 450°F (232°C) range.

Lining. Center the spray head of the application robot on the weld bead and apply the coating. Frequently, both the internal lining and external girth-weld coatings are applied at the same time.

Curing. Select a properly formulated girth-weld FBE that will cure through the residual heat in the pipe.

Inspecting. For final assurance, use robotic video-inspection equipment to check the quality of the coating.

Welded Internal Coupling Systems

Couplings are available to isolate the welded area of the pipe from the corrosive effects of long-term fluid transmission. An attachment system acts as a welding guide for joining the two sections of pipe and becomes an integral part of the weld. The coupling allows pigging for cleaning and inspection of the pipeline.

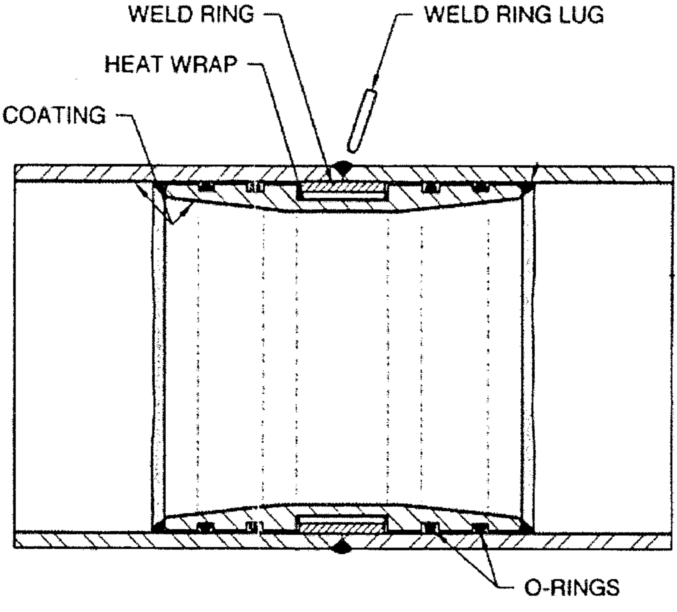

FIGURE B10.6 Welded internal coupling system. The coupling is internally coated with FBE and externally coated to include the o-rings.

The coupling (see Fig. B10.6) is inserted into the end of an internally lined pipe to the weld guide. The second internally lined pipe is slipped over the protruding half to the weld nubs. The center portion of the outer coupling circumference has a machined recess holding heat-resistant material and a steel band with the attached weld nubs. The heat-resistant material acts as an insulator to protect the lining on the inside of the coupling from weld-induced heat damage. O-rings isolate the weld from corrosive attack. The welding process unifies the two pipes and the coupling.

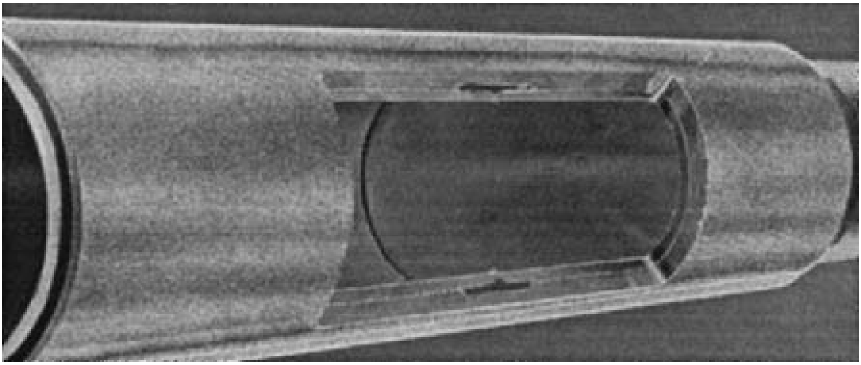

FIGURE B10.7 Weldless coupling system for internal and/or external FBE coating

Weldless Coupling System

This system consists of a coupling that slips over the outside of the coated pipeline (see Fig. B10.7). The coupling is machined with serrated grooves and is smaller than the outside of the line pipe to provide a compression fitting.

A two-part epoxy is applied to the inside of the coupling and to the outside of the lined pipe. It acts as a lubricant during the compression-fit installation and as a seal at the pipe ends, where it forms a bead to provide a continously lined internal pipe. Normally, the coupling is installed in one end of each pipe in the coating-plant yard. In the field, a hydraulic ram is used to join the two pieces of pipe together inside the coupling.

The system is available for pipe in the range of NPS 2 to 12 (DN 50 to 300). It has been used in highly corrosive applications including carbon-dioxide injection, brine-water disposal, and produced fluids of hydrogen sulfide and carbon dioxide containing oil, saltwater, and natural gas.[35]

HANDLING, SHIPPING, STORAGE, INSTALLATION, AND REPAIRS OF FBE LINED AND COATED PIPE AND FITTINGS

For protection of the piping material without regard to the lining or coating, follow the guidelines outlined in API Recommended Practices *RP 5L1 Recommended Practice for Railroad Transportation of Line Pipe and 5LW Recommended Practice for Transportation of Line Pipe on Barges and Marine Vessels.* See NACE RP0394-94 *Standard Recommended Practice: Application, Performance, and Quality Control of Plant-Applied, Fusion-Bonded Epoxy External Pipe Coating*[31] for guidelines for handling, storage, and shipping of coated pipe. For rigid internal linings,[13] steps must be taken to prevent pipe flexing during handling and transportation.

FBE coatings are tough and resistant to handling damage. However, any organic material caught between a rock and a hard place (e.g., steel) can be damaged, and care must be taken to properly handle, load, and transport the coated pipe in one example of good practice, NPS 42 (DN 1050) pipe was coated, loaded onto rail cars, shipped 3000 miles (4800 kilometers), unloaded, and stockpiled. It was later strung along the right-of-way and welded—representing a total of nine handling operations on the coated pipe. Final electrical inspection detected less than 1.5 holidays per joint.[36]

Handling and Shipping

Handling Equipment. Do not use forklifts unless dunnage between layers of stacked pipe is at least ¾ in (19 mm) thicker than the forks. Use at least 2-in (50-mm) runners. Do not use with nested pipe. The top of the forks should be padded with at least 3⁄16 in (5 mm) of dense rubber or polyurethane. Torn or worn pads may allow burrs or other protrusions to come in contact with the coating. To protect the lower level of pipe coating, the bottom of the forks should also be padded.

Overhead Loading Equipment. Both sides of the pipe hooks and the first 4 ft (1.3 m) of the cable attached to the pipe hooks must be padded with at least ⅛ in (3 mm) of rubber or urethane. Overhead equipment may be used with either stacked or nested pipe.[37]

Use of dunnage—to wood strips that support and separate the pipe—is important to ensure safe arrival of the load. Care is required in attaching chocks or padding to the dunnage. Nails should be positioned to avoid contact with the pipe coating. This can be accomplished by countersinking the nails ⅛ in (3 mm) or positioning to avoid pipe contact. Dense rubber padding may be used as an alternative to countersinking the nails, but nails or staples used to attach the padding must not come in contact with the pipe surface. Do not use carpet or excelsior-filled kraft paper, since nails can penetrate through this type of padding.[37]

Separators. Pipe that is loaded or stored should have full-encirclement separators located within 3 ft (0.9 m) of the pipe ends, and one or more at approximately equidistant intermediate locations.[31,38]

There are several suitable materials available for separators, including tight-weave polypropylene rope, dense rubber padding, and cardboard sleeves. Material selection and number of separators depends on the compression characteristics of the separator and the weight of the pipe. For example, with pipe weighing 300 lb per ft (450 kg per m), either eleven 3 in (7.6 cm) wide by 0.6 in (1.5 cm) thick dense rubber pads or seven 0.75 in (1.9 cm) diameter tight-weave polypropylene rope separators will provide adequate separation between nested pipes.[39]

Separators at the rear end of the pipe may fall off in transit. They should either be attached by tape or placed in front of the dunnage.

Hold-down strapping, used during shipping, should be either nonmetallic or steel banding with burr-free edges. Steel bands should be at least 1.5 in (38 mm) wide. Padding should not be used with steel bands, because it may compress and allow loosening of the load. Chains can cause damage to both the coating and the pipe. Heavy, dense rubber padding for chains should be used, but even that is not foolproof.[38]

Submerged arc-weld beads, in contact with adjacent pipe or dunnage, may damage the coating. Position the weld seam to avoid such contact. This does not apply to electric-resistance weld (ERW) pipe, which does not have an elevated weld seam.[39]

Storage

Stockpiling of Pipe. The bottom row of pipe should be elevated off the ground on timber skids or earth berms covered with polyethylene, properly spaced and leveled to support the coated pipe without damage. The bottom row should be restrained to prevent joints from rolling. The racks should be level over their entire length, but a slight tilt of the pipe to permit drainage is desirable.

To prevent damage by bevel-shoulder gouging, place the pipe as parallel as possible. Position the weld seam, if present, toward the interstitial gap, not toward the adjacent pipe.[38] Do not intermix short joints with long joints. To avoid bevel-damage to the coating, store short joints on the top or at the end of the pipe stack.

Chalking of FBE—the formation of a light-colored powdery residue on the coating surface caused by exposure to sunlight and moisture—is normal and acceptable, as long as the thickness of the FBE remains above the specified minimum. Chalking protects the coating from further damage, but it can be removed by rain, which allows further chalking and eventual reduction in thickness. For long-term outdoor storage (over two years), protect the sunlight-exposed surfaces with a latex paint[40] or other suitable shading system.

Installation

Off-Loading. Use only nylon slings, rope belts, or other padded equipment as detailed in the handling section.

Bending. Bending-machine shoes, calipers, and stiff back should be padded with standard rubber inserts. Burrs and other protrusions around the shoe entry and exit points should be ground smooth.

Welding. The factory-applied coating cutback is normally adequate to prevent burn damage to the coating. Drape a 20 in (0.5 m) strip of fire-retardant matting or cloth over the top and to each side of the weld to prevent spatter from burning through the coatings. Precautions should be taken to ensure adequate ventilation during welding.

Field-Cutting. When field-cutting pipe, the epoxy will carbonize or char about 2 in (5 cm) from the cut. Emissions from the lining or coating are no more toxic than those given off during the welding procedure. However, precautions should be taken to ventilate the area, particularly during tie-ins where there is little air movement at the bottom of the trench.

Girth-Weld Coating. See the section ‘‘Joint Systems Coatings and Linings’’ for details.

Holiday Detection. Make sure that the holiday detector (jeeper) can be set at the proper voltage. A rule of thumb for voltage is 125 V/mil (5 volts per micron). For more precise voltage calculations use the equation[27]:

$$\text{Testing voltage, } V = 525\sqrt{T} \qquad \text{(B10.1)}$$

where V = Peak voltage in volts
T = Minimum specified thickness in mils (1 mil = 25.4 microns)

TABLE B10.5 Reference Codes, Standards, Specifications, and Regulations

American Society of Mechanical Engineers
B31.1: Power Piping
B31.11: Slurry Transportation Piping Systems, Special Notice—1990
B31.3 Process Piping
B31.4: Liquid Transportation Systems for Hydrocarbons, Liquid Petroleum Gas, Anhydrous Ammonia, and Alcohol
B31.8: Gas Transmission and Distribution Piping Systems
American Society for Testing and Materials (ASTM)
G8-96: Test Method for Cathodic Disbonding of Pipeline Coatings
G12-83: Method for Nondestructive Measurement of Film Thickness of Pipeline Coatings on Steel
G14-88: Test Method for Impact Resistance of Pipeline Coatings (Falling Weight Test)
G17-88: Test Method for Penetration Resistance of Pipeline Coatings (Blunt Rod)
G20-88: Test Method for Chemical Resistance of Pipeline Coatings
G80-88: Test Method for Specific Cathodic Disbonding of Pipeline Coatings
G95-87: Test Method for Cathodic Disbondment Test of Pipeline Coatings
American Petroleum Institute
RP 5L1 Recommended Practice for Railroad Transportation of Line Pipe
RP 5L2-87 Recommended Practice for Internal Coating of Line Pipe for Non-Corrosive Gas Transmission Service; Third Edition
RP 5LW Recommended Practice for Transportation of Line Pipe on Barges and Marine Vessels
RP 5L7-88 Recommended Practices for Unprimed Internal Fusion Bonded Epoxy Coating of Line Pipe; Second Edition
Manufacturers Standardization Society of the Valve and Fittings Industry
SP-98-87 Protective Epoxy Coatings for the Interior of Valves and Hydrants
ES-29-79 Abrasive Blast Cleaning of Ferritic Piping Materials (R 1984)
NACE International
RP0394-94 Standard Recommended Practice: Application, Performance, and Quality Control of Plant-Applied, Fusion-Bonded Epoxy External Pipe Coating
NACE Standard Recommended Practice, RP0188, Discontinuity (Holiday) Testing of Protective Coatings
RP0490-95 NACE Standard Recommended Practice, Holiday Detection of Fusion-Bonded Epoxy External Pipeline Coatings of 250 to 760 microns (10 to 30 mils)
Steel Structures Painting Council
SSPC-Vis 1 Pictorial Surface Preparation Standard for Painting Steel Surfaces
NACE/SSPC
NACE No. 1/SSPC-SP 5 White Metal Blast Cleaning
NACE No. 2/SSPC-SP 10 Near White Metal Blast Cleaning
AWWA Standards for Water Systems Piping
C213-96 Standard for Fusion Bonded Epoxy Coating for the Interior and Exterior of Steel Water Pipelines
C550-90 Protective Interior Coatings for Valves and Hydrants

TABLE B10.5 Reference Codes, Standards, Specifications, and Regulations (Continued)

National Standards of Canada
CAN/CSA-Z245.20-M92, External Fusion Bond Epoxy Coating for Steel Pipe
CAN/CSA-Z245.21-M92, External Polyethylene Coating for Pipe
ECISS: European Committee of Iron and Steel Standardization* Technical Committee 29: Steel tubes and fittings Subcommittee 4: Coatings
EC 029016 External three-layer, polyethylene-based coating systems
EC 029063 External three-layer, polypropylene-based coating systems
EC 029062 External thermosetting fusion-bonded epoxy coating systems

* Standards are under development.

An effective electrical connection between the pipe and the holiday detector is required for proper functioning of the equipment. A direct connection to an exposed steel surface on the pipe provides the best connection. An alternative is to use a flexible ground wire, approximately 30 ft (9 m) long, connected to the ground terminal of the detector and trailed along the surface of the earth.

If the pipe lining or coating surface is dry, use a continuous direct-current (DC) voltage holiday detector. If moisture such as dew is present, use a pulse DC voltage holiday detector to prevent false indications of coating discontinuity.[27,40]

Repair. Remove rust or dirt with a cloth or wire brush. Do not remove the FBE pipe lining or coating unless that becomes necessary to remove rust. If undercutting is present, pry or cut away the coating until reaching adhered coating before effecting repair. Roughen the adjacent coating surface with 80 to 120 grit sandpaper to improve adhesion.

For base areas of 1 in (25 mm) diameter or smaller and farther than 8 in (20 cm) from the end of the pipe (the weld-affected zone), use heat-melting sticks. For larger areas, use two-part liquid epoxy.[31,40]

Melt (Patch) Stick. Using any noncontaminating heat source, heat the area to be repaired to approximately 350°F (177°C). Apply the heat in a manner that avoids charring or burning the FBE pipe coating. Continue to heat the cleaned area until the coating is hot enough to melt the patch stick. When the coating is hot enough, the stick will leave residue behind when drawn across the surface. While continuing to heat, apply the patch compound using a circular motion to achieve a smooth, neat-appearing patch having a thickness of no less than 50 mils (1270 microns). Do not apply by melting the stick and allowing it to drip onto the pipe. Allow the patch to cool before handling.

Two-Part Epoxy. Thoroughly mix the separate parts of the coating repair system. Combine the correct ratio of the two parts and mix thoroughly. A uniform color indicates adequate mixing. Apply using a spatula, paint brush, or paint roller. Allow to harden before handling, or protect while wet with a piece of tape. Cure can be speeded by preheating the pipe before application or by using a torch to gently heat the patch after application.

REFERENCE CODES, STANDARDS, SPECIFICATIONS, AND REGULATIONS

Table B10.5 provides a list of various codes, standards, and specifications which are related to piping and FBE lining and coatings. The listed codes cover piping systems, some of which may be lined and/or coated using fusion-bonded epoxy to protect against corrosive flow medium and the environment. The user may seek technical guidance from technical specialists in this field. Manufacturers input and recommendations must be taken into consideration in selecting and specifying suitable lining and coating systems.

Also, the user, owner, designer, and others associated with FBE lining and coatings must ensure compliance with the applicable local, state, and federal regulations.

REFERENCES

1. Marvin Islam, ''Condition Evaluation of Reinforced Concrete Structures: A Case Study,'' Paper No. 521, 1995 NACE National Corrosion Conference.
2. Rupert F. Strobel, ''Fusion-Bonded Epoxy Coatings for Pipeline Corrosion Protection,'' 3M Company, 1981.
3. ''Corrosion Control Report: Internal Pipe Coatings Are a Wise Investment,'' *Pipeline and Gas Journal,* pp. 67–69, March 1993.
4. Thomas Read, ''Yates Field Crude Line Coated Internally, Externally,'' *Pipeline and Gas Journal,* February 1982.
5. Ron E. Carlson, Jr., ''Internal Pipeline Corrosion Coatings Case Studies and Solutions Implemented,'' Paper No. 27, NACE 1992 Annual Corrosion Conference.
6. Paul Langford, ''New Developments in Coatings for the Internal Protection of Water Industry Line Pipe'' (unpublished), 1993.
7. M. Kendig, J. Lumsden, P. Stocker, and S. Jeanjaquet, ''Mechanism of Disbonding of Pipeline Coatings,'' Gas Research Institute, September 1995.
8. A.W. Peabody, *Control of Pipeline Corrosion,* Houston, Texas: NACE, 1967.
9. Herbert Uhlig, *Corrosion and Corrosion Control*, New York: John Wiley & Sons, Inc., 1971.
10. Dennis Neal, ''Fusion-Bonded-Epoxy Coatings: Application and Performance'' (unpublished), 1997.
11. Henry Leidheiser, Jr., (ed), *Corrosion Control by Organic Coatings,* Houston, Texas: NACE, 1981.
12. George Mills, ''Factors Influencing the Choice of Internal and External Anti-corrosion Coatings for Potable and Raw Water,'' NACE Corrosion Conference, Manama, Bahrain, January 1989.
13. Robert H. Davis, ''The Use of Internal Plastic Coatings to Mitigate CO_2 Corrosion in Downhole Tubulers,'' Paper No. 23, NACE Corrosion Conference, 1994.
14. J.L. Boyd, and A. Siegmund, ''Plastic Coated Tubular Goods: Proper Selection, the Key to Success'' (unpublished), 1988.
15. James L. Banach, ''Pipeline Coatings—Evaluation, Repair, and Impact on Corrosion Protection Design and Cost,'' Paper number 29, NACE Annual Conference, 1997.
16. David Norman and David Gray, ''Ten Years Experience of Fusion Bonded Powder Coatings,'' Paper number 367, NACE Annual Conference, 1992.

17. James Banach, ‘‘FBE: an End-User’s Perspective,’’ NACE TechEdge series, ‘‘Using Fusion Bonded Powder Coatings in the Pipeline Industry,’’ June 1997.
18. K.E.W. Coulson and D.G. Temple, ‘‘The Evaluation of External Pipeline Coatings,’’ NACE Western Canadian Regional Conference, February 1983.
19. Kenneth W. Gray and Douglas S. Richart, ‘‘The Chemistry of Epoxy Powder Coatings for Pipe Protection,’’ NACE Gulf Coast Corrosion Seminar, Houston, Texas, February 5, 1980.
20. Henry Lee and Kris Neville, *Handbook of Epoxy Resins,* New York: McGraw-Hill Book Company, 1967.
21. J. Alan Kehr, ‘‘Fast Gel, Fusion-Bonded Epoxies for Protecting Pipelines,’’ *Journal of Protective Coatings and Linings,* Vol. 6, No. 6, pp. 15–18, June 1989.
22. K.E.W. Coulson, D.G. Temple, and J.A. Kehr, ‘‘FBE Powder and Coating Tests Evaluated,’’ *Oil and Gas Journal,* pp. 41–53, August 10, 1987.
23. Stan Thompson and Kuruvila Varughese, ‘‘An Investigation of Evaluation Methods for Internal FBE Pipe Coatings,’’ NACE Annual Conference, 1994.
24. Ron Ramirez, vice-president, Fletcher Pipe Coating, Telephone interview, August 26, 1994.
25. ‘‘NACE No.2/SSPC 10 Near-White Metal Blast Cleaning,’’ Joint Surface Preparation Standard—NACE/SSPC, 1994.
26. George Mills, ‘‘The Development, Application and Evaluation of Novel Fusion Bonded Epoxy Internal Pipe Coating for Use in Aggressive High Pressure Water Injection Service,’’ NACE Annual Corrosion Conference, St. Louis, Missouri, March, 1988.
27. ‘‘Holiday Detection of Fusion-Bonded Epoxy External Pipeline Coatings of 250 to 760 microns (10 to 30 mils),’’ NACE Standard Recommended Practice RP0490-95.
28. ‘‘Discontinuity (Holiday) Testing of Protective Coatings,’’ NACE Standard Recommended Practice, RP0188.
29. ‘‘Method for Nondestructive Measurement of Film Thickness of Pipeline Coatings On Steel,’’ ASTM G12.
30. Tom Fauntleroy and J. Alan Kehr, ‘‘Fusion-Bonded Epoxy Application Manual,’’ 3M Company, 1991
31. ‘‘Application, Performance, and Quality Control of Plant-Applied, Fusion-Bonded Epoxy External Pipe Coating,’’ NACE Standard Recommended Practice, RP0394-94.
32. ‘‘External Fusion Bond Epoxy Coating for Steel Pipe,’’ National Standard of Canada, CAN/CSA-Z245.20-M92.
33. S.J. Lukezich, J.R. Hancock, and B.C. Yen, ‘‘State-of-the-Art for the Use of Anti-Corrosion Coatings on Buried Pipelines in the Natural Gas Industry,’’ Gas Research Institute, April 1992.
34. ‘‘External Polyethylene Coating for Pipe,’’ National Standard of Canada, CAN/CSA-Z245.21-M92.
35. ‘‘Alternative Pipe Coupling System Used in Middle East,’’ *Oil and Gas Journal,* September 26, 1994.
36. R.F. Strobel and B.C. Goff, ‘‘Fusion Bonded Epoxy Pipeline Coatings–A Review,’’ BHRA Third International Conference on the Internal and External Protection of Pipes, London, September 5–7, 1979.
37. ‘‘MQ-320: Pipe Loading/Unloading Inspection,’’ Tenneco Gas Pipeline Group, December 16, 1987.
38. David Sokol, ‘‘Stacking Shipping Issues of Coated Pipe,’’ NACE TechEdge: Using Fusion Bonded Powder Coating in the Pipeline Industry, Houston, June 1997.
39. ‘‘Plant Applied External Fusion Bonded Epoxy Pipe Coating,’’ Tenneco Gas specification UC-200, March, 1993.
40. ‘‘MQ-502: Pipe Storage/Jeeping/Repair,’’ Tenneco Gas Pipeline Group, December 15, 1987.

CHAPTER B11

RUBBER-LINED PIPING SYSTEMS

Richard Lewis
Executive Vice President
Blair Rubber Company
Akron, Ohio

David Jentzsch
General Manager
Blair Rubber Company
Akron, Ohio

INTRODUCTION

This chapter is written to provide the reader with information about rubber-lined piping, including engineering applications and installation details. Rubber lining has been used for decades to protect metal pipe from corrosion. Rubber lining has also demonstrated its superiority in protecting piping against abrasion and is used extensively in abrasive service applications.

Rubber-lined piping has been used for all types of chemical environments (acids and basic solutions) that range from a pH of 1 to 14, and with temperatures ranging from 50 to 220°F (10 to 104°C). Applications include such numerous services as cationic/anionic water-treatment systems; piping in plants that manufacture chemicals, including those producing hydrochloric acid, phosphoric acid, chlorine, and titanium oxide; and slurry pipe lining for both corrosive and abrasive conditions, such as in power plant and mining operations. The mining applications include transport of copper, iron and uranium ore, and other rare minerals mined and piped to overland plants and to tailing or settling ponds.

Rubber linings form an impermeable barrier to many gases and liquids. They can only provide protection, however, if the pipe is properly fabricated and the type of rubber lining is suitable for the chemical service. Many types of rubber linings exist. The correct type of rubber lining must be matched with the appropriate service conditions. This selection is determined by the rubber lining manufacturer.

PIPE FABRICATION REQUIREMENTS

Metal Specifications

Pipe intended to be lined with rubber linings should be fabricated such that all joints can be continuously welded and ground smooth. Any special requirements specified by an engineering company or end user shall be agreed upon by all parties prior to pipe fabrication. An overview of these specifications is provided in the following subsections.

Material

The surfaces are to be free of galvanizing or other plating, oil, and grease. The surface must also be free of scale and other foreign material not readily removed by sandblasting or shotblast. Castings, when specified, are to be smooth and free of porosity, defects, sand or blow holes, and other imperfections.

Pipe is to be seam-welded or seamless steel pipe unless otherwise specified. Wall gauge is to be specified if not shown or called for on purchase orders or drawings.

Flanges shall be flat-faced, Class 150 forged steel slip-on, weld neck, or boiler plate. Raised face flanges shall not be used. Class 125 cast-iron flanges or cast-iron pipe are not recommended for use with rubber lining. If customers insist on using cast-iron pipe and flanges, they do so at their own risk. Cast-iron is porous, which results in the formation of minute air blisters between the rubber and the metal. These air blisters expand during the steam cure, causing rubber-to-metal bond failure. A defect in the lining that looks like a blister is known as a *blow*.

Flanges on opposite ends of pipe are to have their bolt holes in exact alignment, unless otherwise specified. Pipe ends at the flange face are to be continuously welded and ground smooth. Rough burrs are to be removed.

When cast-steel domes and fittings are specified, they shall be free from porosity, sand holes, and other foreign material.

TABLE B11.1 Typical Lengths for Straight Pipe

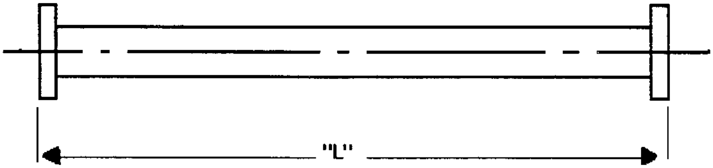

National pipe size NPS (DN)	2 (50)	3 (80)	4 (100)	6 (150)	8 (200)	10–42 (250–1050)
Maximum recommended length feet (meters)	6 (2)	10 (3)	20 (6)	30 (9)	40 (12)	40 (12)

General notes: "L" denotes maximum overall length

Pipe Fabrication Design Criteria

Unless otherwise specified, dimensions for pipe are end to end. For projecting fittings the dimensions are measured from the centerline to the outside surface facing of the fitting, nozzle, or flange. The tolerances shown below apply to overall pipe length dimensions, when such tolerances are specified on the drawings.

Straight Pipe NPS 24 (DN 600) or less	Plus or minus 1⁄16 in (1.5 mm)
Straight Pipe over NPS 24 (DN 600)	Plus or minus 1⁄8 in (3.2 mm)
Flange Gaskets	Plus or minus 1⁄16 in (1.5 mm)

Tables B11.1 through B11.4 provide the maximum length dimensions in designing runs of pipe that will allow the rubber lining applicator to install the lining. The maximum length dimensions shown include flange length; however, pipe may or may not have flanged ends.

TABLE B11.2 Pipe with Standard 45° Elbow Limitations

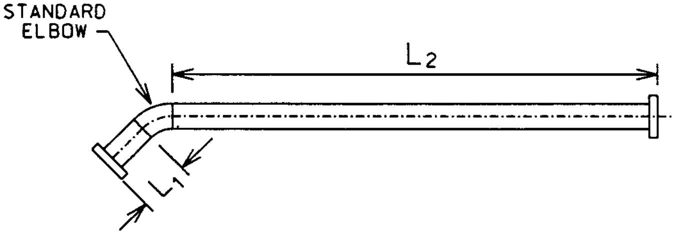

Pipe size NPS (DN)	L_1 maximum in (mm)	L_2 maximum ft (mm)
2 (50)	2 (51)	6 (1829)
3 (80)	4 (102)	6 (1829)
4 (100)	5 (127)	8 (2438)
6 (150)	8 (203)	10 (3048)
8 (200)	12 (305)	14 (4267)
10 (250)	12 (305)	14 (4267)
12 (300)	18 (457)	14 (4267)
14 (350)	24 (610)	14 (4267)
16 (400)	24 (610)	14 (4267)
18 (450)	24 (610)	20 (6096)
20 (500)	24 (610)	20 (6096)
24 (600)	60 (1524)	30 (9144)

TABLE B11.3 Pipe with Standard 90° Elbow Limitations

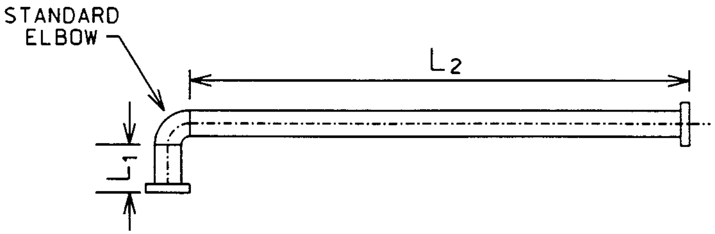

Pipe size NPS (DN)	L_1 maximum in (mm)	L_2 maximum ft (mm)
2 (50)	2 (51)	4 (1219)
3 (80)	6 (152)	4 (1219)
4 (100)	6 (152)	4 (1219)
6 (150)	6 (152)	6 (1829)
8 (200)	18 (457)	10 (3048)
10 (250)	18 (457)	10 (3048)
12 (300)	24 (610)	10 (3048)
14 (350)	30 (762)	10 (3048)
16 (400)	36 (914)	10 (3048)
18 (450)	36 (914)	10 (3048)
20 (500)	36 (914)	12 (3658)
24 (600)	48 (1219)	30 (9144)

Construction

The necessary bolts, nuts, and washers to complete any assembly are to be furnished by the pipe supplier or fabricator; unless otherwise specified.

The pipe is designed to allow the rubber lining applicator to perform the task of putting the rubber sheet stock on the inside of the pipe. Tables B11.1 through B11.4 show that the smallest pipe size which can be lined is NPS 2 (DN 50); however, NPS 1 nozzles can be lined per the following specifications:

1. Maximum length of nozzle is NPS 1 (DN 25)
2. Maximum thickness of rubber is ⅛ in (3 mm)
3. Maximum distance from end of pipe is 18 in (450 mm)
4. Nozzle is attached to a minimum of NPS 6 (DN 150) pipe

TABLE B11.4 Header Branch Limitations: Branches Near End of Fabricated Piece

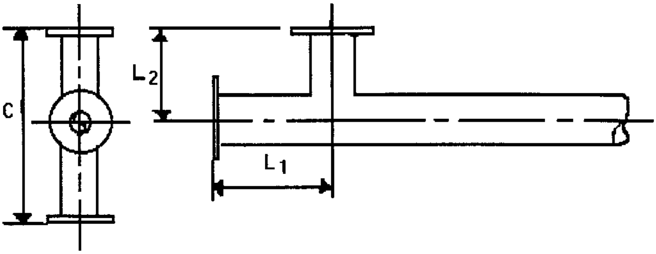

IF BRANCH CONNS. ARE REQ. IN OPPOSITE DIRECTIONS OFF MAIN RUN DIM. ‘C‘ SHALL NOT EXCEED 3’-0’’ (914 mm)

Header size (DN)	Max. length or dimension L_1 in (mm)	Max. length or dimension L_2 in (mm)
2 (50)	4 (102)	6 (152)
3 (80)	6 (152)	6 (152)
4 (100)	9 (229)	9 (229)
6 (150)	12 (305)	18 (457)
8 (200)	24 (610)	18 (457)
10 (250)	24 (610)	32 (813)
12 (300)	24 (610)	34 (864)
14 (350)	24 (610)	36 (914)
16 (400)	24 (610)	140 (1016)
18 (450)	36 (914)	48 (1219)
20 (500)	120 (3048)	48 (1219)
24 (600)	240 (6096)	48 (1219)

Welding

All welded pipe joints to be lined with rubber are to be continuous solid welds. All welds to be lined with rubber must be smooth with no porosity, holes, high spots, lumps, pockets, or undercuts. Grinding shall be used to remove sharp edges or high spots.

Nozzles, pad flanges, or reinforcement plates shall be properly braced. Maximum allowable tolerance for overall pipe length, including gaskets, is ⅛ in (3.2 mm).

Interior corners to be rubber lined are to have a minimum radius of ⅛ in (3.2 mm).

Weld splatter must be entirely removed.

All joints, when possible, shall be welded using backing rings on the inside. If welding with backing rings is not possible, then all welds must penetrate to the inside diameter of the pipe; thus leaving the inside diameter smooth.

In all cases, the fabricator shall assume responsibility for the strength of welds. All sharp edges and corners shall be ground smooth and have a contoured surface.

Metal Preparation

All metal surfaces to be lined shall be blasted to a white metal finish. White metal blasting is the process of removing all foreign matter (such as rust, scale, and paint) by the use of abrasives propelled by using 100 psi (690 kPa) of air. The surface finish will become a metallic gray-white color, with a roughened anchor pattern providing a 1.5 to 3 mil (37.5 to 75 micron) profile. Other acceptable standards are provided by the Structural Steel Painting Council (SSPC) or National Association Corrosion Engineers (NACE).

Cementing

Primer shall be applied immediately after removal of dust and sandblasting to prevent rusting. Additional coats of primers and cements may need to be applied as specified by the lining manufacturer. Primers and cements are normally applied on the inside of pipe with a swab, spray, or roller. Sufficient drying time between cement coats is required.

LINING GUIDELINES

Sheets of rubber are unrolled and cut to the desired size and shape on a clean, heated table. Care shall be taken so that the tie gum (sticky) side of the lining is facing out for cementing (see Fig. B11.1). The edges can be cut with a skive (30 to 45° angle) to aid in forming the seam. For best results the plastic side of the lining, once removed, is cemented and applied to the substrate. When the lining requires preshrinking, it is unrolled on the table and allowed to shrink prior to being cut to the proper size.

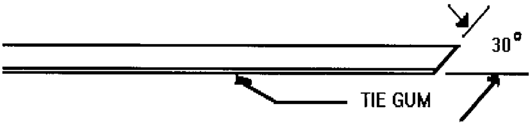

FIGURE B11.1 Cutting stock showing at 30° bevel for a close skive joint.

Two styles may be used to make a seam; *a butt skive joint* without cap strips

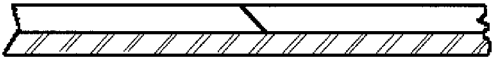

FIGURE B11.2 Butt seam.

(Fig. B11.2) *and overlap* (open or closed skive, Fig. B11.3). Referring to the lining specification ensures the proper seam style is applied. The butt skive is shown, along with an overlap method with a closed skive. Open skives are used when the rubber is a *one-construction lining*. One-construction lining is made with one type of rubber. A closed skive procedure is used on a multiple construction lining to protect the underlying plies. *Multiple construction rubber linings* refer to linings that have more than one type of rubber in the layers (Fig. B11.4). For example; a three-ply lining may have a tie gum which is bonded to the substrate; a middle layer of hard rubber to resist permeation of a particular chemical; and a cover lining which resists abrasion or another type of chemical. Multiple construction linings are designed using a tie gum placed on one side of the lining and may have other layers to provide greater chemical and temperature resistance.

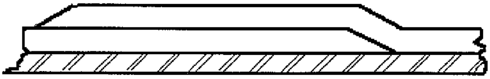

FIGURE B11.3 Closed skive overlap.

Lining Procedure for Standard Flanged Pipe

A tube shall be formed with lining stock using longitudinal skived seams. This is accomplished by wrapping the lining stock around a mandrel, using a liner inside the tube, or any other method to facilitate the making of a tube (Fig. B11.5). The spliced tube's outside circumference is slightly smaller than the inside circumference of the pipe to be lined. When forming the tube, the seam is formed by using steady, firm, and overlapping strokes with a roller. When rolling, always work toward the edges. This forces all the air out from behind the overlapping layers of lining or

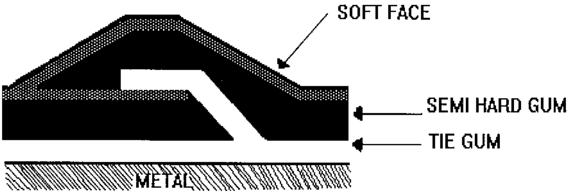

FIGURE B11.4 Multiple construction lining (3-ply shown).

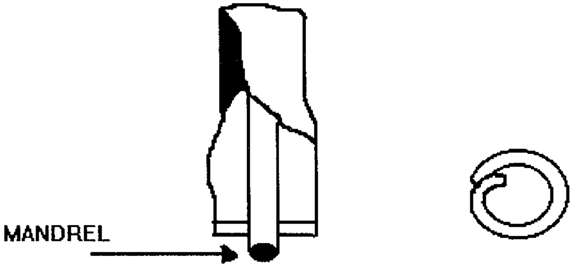

FIGURE B11.5 Method of building tube.

along the butt skive (Fig. B11.6). The spliced tube's length is longer than the pipe's length (Fig. B11.7).

Twisted multifilament strings (called bleeder strings) are then applied lengthwise to permit proper air venting between pipe and lining. String made from synthetic yarns is not to be used. Stringing is done after cementing the pipe, and the individual strings are spaced equally around the circumference. Normally, four strings are used on pipe of sizes up to and including NPS 6 (DN 150). Larger-sized pipe normally requires the use of additional strings. The use of strings is optional with applicators.

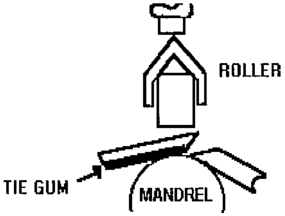

FIGURE B11.6 Rolling operation.

FIGURE B11.7 Finished tube.

The tube is enclosed in a liner and a tow rope is attached to it. The tube is then pulled into the pipe with a slow constant pull (Fig. B11.8). One of two methods is used to seal the liner against the inside surface of the pipe.

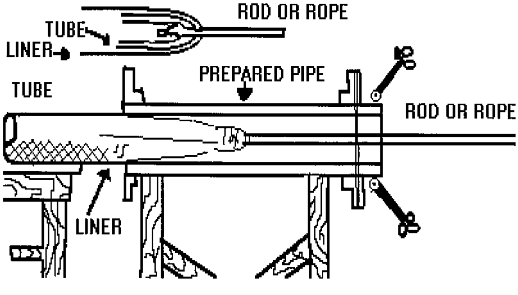

FIGURE B11.8 Pulling in tube.

Method 1. The liner is removed and the tube expanded against the pipe wall by using air pressure. A mechanical extension and flange arrangement is used to seal the pipe ends and a minimum of 100 psi (690 kPa) internal pressure is maintained in the expanded tube for at least 5 minutes. If any air blisters are found after the air pressure is removed, they are punctured, vented, and repaired with a 2 in (50 mm) patch. For a finished cross-sectional view see Fig. B11.9.

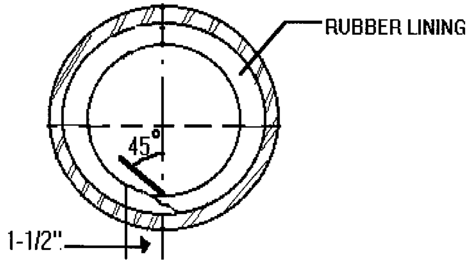

FIGURE B11.9 Longitudinal seam detail.

Method 2. After the liner is removed, an air bag or *balloon* is pulled through the pipe, with stops at intervals where it is alternately inflated and deflated. Next, the extension is removed, the excess stock flared over the flange face, and trimmed flush. A covering is then applied to the full face of the flange. The inside diameter (I.D.) of the flange stock is skived to slightly less than the I.D. of the lining and stitched firmly to the tube stock or folded out and onto the flange surface. When using hard rubber lining on flanges, it is important that the pipe installer/user understand that soft rubber gaskets are required over the face lining.

On pipe sizes larger than NPS 6 (DN 150), the flange stock is lapped onto the lining instead of the skive used on smaller sizes. This lapping technique makes a stronger joint and is the preferred method. Some customers may prefer not to have laps at the flanges because of abrasion considerations or requirements on full line capacity (see Fig. B11.10 and B11.11 for rubber lining of flange facings).

See Fig. B11.12 and B11.13 for suggested lining styles of lateral nozzles and side outlets. Notice how the rubber is lapped into the main-run length of pipe.

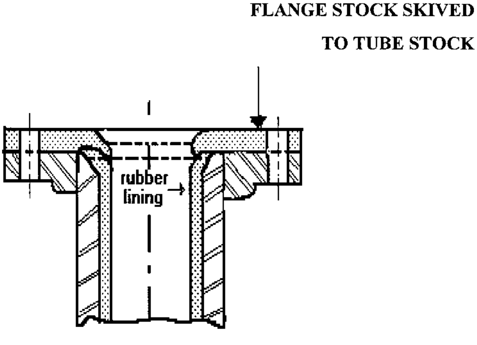

FIGURE B11.10 Flange face rubber lining.

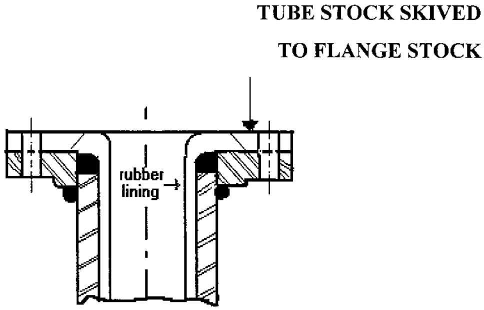
TUBE STOCK SKIVED
TO FLANGE STOCK
rubber lining

FIGURE B11.11 Flange face rubber lining.

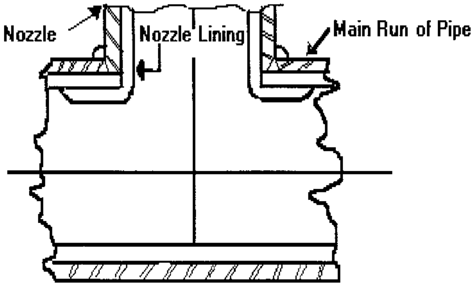
Nozzle
Nozzle Lining
Main Run of Pipe

FIGURE B11.12 Rubber lining of nozzle or branch connection.

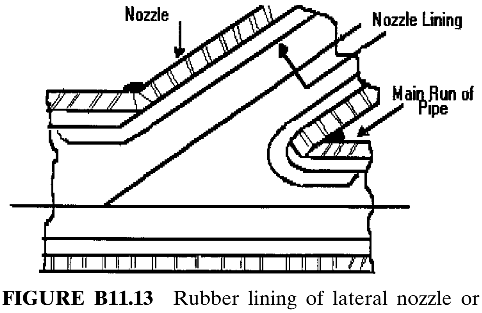
Nozzle
Nozzle Lining
Main Run of Pipe

FIGURE B11.13 Rubber lining of lateral nozzle or branch connection.

Lining Procedure for Large-Diameter Pipes

Piping that is too large to safely line by inflating a tube, but large enough to allow personnel to enter, is lined in the same manner as tanks or ductwork. Bleeder strings are used at the applicators option, to facilitate the escape of gases during curing. The stock is flared over the flange face and trimmed or buffed flush after the cure.

Next, a covering is applied to the full face of flange. The I.D. of the flange stock is then skived to slightly less than the I.D. or lining and stitched firmly to the tube stock. On larger-sized pipe, the flange stock is lapped into the pipe lining instead of applying the skive technique used on smaller pipe or applying lining to flange first. The lined pipe is cured as specified by the lining manufacturer. The best cure results will be obtained by using a steam autoclave.

After curing, the ends of the pipe are buffed to remove any excess rubber. This provides a smooth fit during installation at the plant site.

Lining Procedure for Victaulic Pipe

The inside of pipe shall be lined in accordance with procedures used for standard flanged pipe.

When using ⅛ through ¼ in (3.2 through 6.4 mm) linings, the tube lining is extended over the end of the pipe and bent back into the recess on the outside of the pipe. A round of friction tape is then applied over the rubber on the outside diameter (O.D.) of the pipe end. After the pipe is cured, the tape is removed and the O.D. buffed flush with the O.D. of the metal (Fig. B11.14). Other styles of pipe joints have been designed. These styles must be designed to prevent crushing or tearing the rubber during installation and use. Soft (30–40A Duro) rubber lined flanges must never be squeezed more than one-third their thickness. Harder rubber linings can't be squeezed, and will require a soft rubber gasket on the flanges.

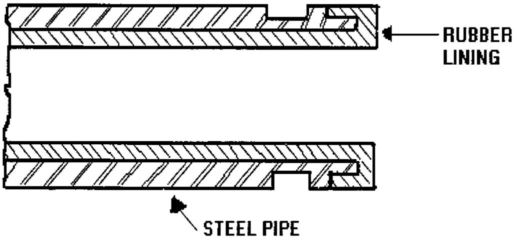

FIGURE B11.14 Rubber lining of grooved pipe.

TABLE B11.5 Limitations on Weld Seams

Pipe size		Maximum number of weld seams	
NPS	DN	Longitudinal	Circumferential
3–6	80–150	1	1 [in 10 to 14 ft (3 to 4.25 m) length]
8–16	200–400	2 (180° apart)	2 [in 20 ft (6 m) length]

TABLE B11.6 Maximum Straight Lengths

Pipe size		
NPS	DN	Maximum straight length
2–3	50–80	14 ft (4.3 m)
4–8	100–200	24 ft (7.3 m)
8–42	200–1050	40 ft (12.20 m)

Table B11.5 lists the maximum number of longitudinal and circumferential weld seams in a given length of pipe.

Table B11.6 provides the maximum straight length of pipe for a given pipe size which can be lined with rubber. The maximum straight lengths of different size pipes that can be lined depends upon the capabilities of the rubber lining applicator. Straight lengths of pipe up to 60 ft (18.29 m) long have been successfully lined.

PROTECTING RUBBER-LINED PIPE

Many sources for potential problems await rubber lined piping during installation at job sites. A partial, but not all inclusive, list of those sources is as follows:

1. Ozone from welding: Ozone can and will cause severe cracking of natural rubber in linings, and the corrosion barrier may be breached permanently.
2. Portable generators, power relay stations, and electric motors are a potential source of ozone.
3. Fumes from generators, such as nitrous oxide, are detrimental to rubber linings.
4. Arcing from electrical equipment and hook-ups generate a corona (ozone) environment.
5. Oils and liquids of many types cause softening and deterioration of the rubber.
6. Problems may occur from any one or more of the above sources and can occur either inside or outside of the structure being erected. Suitable protection must be provided.

Some suggested means for protection are:

- Installation of rubber lining should be done as near the end of the construction phase as possible.
- Openings to rubber-lined equipment should be closed as much as possible to prevent attack from hazards such as those noted.
- The ends of rubber-lined pipe should be blanked off and kept that way until ready for use. Lining on flanged faces should be protected during shipment or storage by covering with plywood or other suitable material.
- All portable rubber-covered items should be covered up for protection.
- Each piece should be identified by stamping on a ground area in such a manner that numbers will remain visible. Stencil: ‘‘Rubber Lined—Do Not Cut or Weld.’’

- Additional protective measures are available from rubber lining manufacturer publications.

ASSEMBLY, TESTING, INSPECTIONS, AND MAINTENANCE

Assembly on the Job Site

Care shall be taken to ensure that the rubber lined flange is not damaged by being cut or crushed during assembly. The rubber lining on a flange must not be compressed more than one-third of its thickness, or the lining could tear away from the metal surface, causing a leak. Listed below are recommendations for gasketing and bolt tightening rubber lined pipe, flanges, and equipment:

- The gasket thickness should be equal to or slightly less than the rubber lining, but not less than ⅛ in (3.2 mm).
- The gasket hardness should be equal to or slightly less than the hardness of the rubber lining, but not greater than 60 (Shore A).
- The surface of the lining in contact with the gasket should be treated with a release coating which will allow disassembly without causing damage to the lining.
- All bolts should be initially tightened until they are snug. Then each bolt should be torqued down to 15 ft · lb (20.3 N · m) using standard cross pattern techniques.
- After 24 hours, bolts should be checked to ensure that 15 ft · lb (20.3 N · m) is maintained. After the line or equipment is put in service, someone should check to ensure that there are no leaks. If a leak is observed, the bolts should be tightened evenly and only enough to stop the leak.
- For high-pressure applications [greater than 300 psi (2070 kPa)], flanges may require a high-pressure design versus the typical flat-face design.
- The alignment of all flanges should have a tolerance of 1⁄32 in (0.79 mm).

Testing

The test procedure outlined in this subsection measures the ability of rubber to withstand the effect of liquids. It is designed for testing specimens of elastomeric vulcanizates cut from standard sheets (ASTM D3182). The lining manufacturer can supply these for the lining specified.

In view of the wide variations often present in service conditions, this test may not give direct correlation with service performance unless the actual vessel considered for lining is utilized. However, this test method yields data on which to base judgment as to expected service quality.

This provides a method for exposing test specimens to the influence of liquids under definite conditions of temperature and time. The resulting deterioration is determined by noting the changes of volume, weight, and hardness before and after immersion in the test liquid.

For purpose of the test, it is desirable to use the liquid with which the vulcanizate will come in contact in service. Several small spools can be lined for the purpose of the test with various rubber linings.

If desirable, laboratory testing can be performed as outlined in ASTM D471. The standard specimen shall be square having dimensions of 6 in × 6 in (150 mm × 150 mm). Thickness of sample shall be 0.125 in (3.2 mm). The lining manufacturer can supply the proper sheet for the lining specified.

Three sample specimen squares shall be prepared for each composition to be tested. Two shall be immersed and one retained for the original data.

If necessary, this procedure can continue for more immersion cycles or longer periods; 168 to 672 hours are normally sufficient to be predictive.

During immersion, records of temperature and concentration which vary from the normal operating conditions should be maintained.

The following information is recorded with samples and sent to the manufacturer of the lining for evaluation.

1. State that the test was conducted in accordance with this test procedure.
2. Date and temperature of place of test.
3. Dates of various periods of immersion.
4. Immersion liquid utilized.
5. Temperature of exposure.
6. Statement of condition of exposed specimens from visual and manual examination.
7. Results of immersed and nonimmersed specimens in accordance with the ASTM D471 test method.
8. Report hardness before and after immersion in compliance with ASTM D2240.

Obviously, unsuitability of lining would be swelling, deterioration, delamination, softening, or hardening. Some chemicals may exhibit one of the noted characteristics but still provide adequate service life. This is why the lining manufacturer must be consulted throughout the process.

Testing Under Process Conditions

Operating environments in many industries today are more corrosive, chemical compositions are more complex, concentrations are greater, and processing temperatures are higher than in the past. Thus, if a lining is being considered, it is often beneficial for the consumer to evaluate rubber-lined samples under actual process conditions. A proper evaluation following an appropriate period of exposure would include a percent weight change and volume change of the sample, a change in hardness and surface appearance, and the degree and rate of permeation which is extremely important to check. In some cases, a destructive permeation can occur without significant change in the weight, volume, hardness, or appearance of the lining.

Often the vapor phase of a chemical is overlooked when testing for a lining. In some conditions, rubber lining exposed to chemical vapors can be affected more severely than an immersed lining.

Among the tests and test methods that can be used for rubber linings are: chemical resistance (immersion), ASTM D 471; chemical resistance (test cell), ASTM D 3491; abrasion resistance, ASTM D 3389; adhesion, ASTM D 429; tensile-elongation, ASTM D 412; absorption, ASTM D 471; and hardness, ASTM D 2240.

TABLE B11.7 Service Condition Information Required

1. Process or operation: ______________________________
   ____
2. Equipment involved: ______________________________
   ____
3. What chemicals are present and what are their minimum, maximum and operating concentrations? (Also include any impurities or incidental materials present, even though in traces only.)
   ____
   ____
4. Temperature: minimum ________ maximum ________ operating ________
5. Are there any abrasive materials present and, if so, what is the:
   a. nature of abrasive material ______________________________
   b. percent of solids ______________________________
   c. degree of abrasion (What is present service life of equipment?) ____________
6. Operating pressure (psi) ____________ or vacuum (inches of mercury) ____________
7. Is slight contamination or discoloration of solution objectionable? ____________
8. Is equipment a welded fabrication or casting? (If alloy, advise type.) ____________
   ____
9. Has this type of equipment been rubber lined before? If so, advise type of rubber lining and service life obtained. ______________________________
10. Have there been rubber failures in this service? ______________________________
    If so, were they:
    a. in the liquid or vapor phase? ______________________________
    b. hardening or swelling failures? ______________________________
    c. caused by abrasion? ______________________________
11. Will the pipe lining be exhaust steam cured? ______________________________
    ____
12. Will there be supplemental heating of the tank contents (inner coils, recirculation, through a heat exchanger or external coils around the pipe walls)? ____________
    ____
13. Will the lining be exposed to any thermal shock? ______________________________
14. What are the consequences if the pipe lining should fail? ______________________________
    ____

Table B11.7 is a form devised to help the specifier gather the information necessary to make an informed decision.

Inspections

The general appearance when looking inside of the pipe shall be observed and noted. Seams and lining should not have any lumps, blisters, or looseness, or have any open seams. The following inspections and tests are performed:

Hardness. The durometer hardness is checked in accordance with ASTM D 412. This checks the cured hardness against that specified by the rubber manufacturer.

This is done 24 hours after completion of cure to allow the rubber to achieve its optimum properties. While the hardness or durometer reading in the laboratory under the proper conditions can produce consistent results; its use in a pipe by different people at different times, pressures, and methods can result in appreciable variations. This is especially true when the instrument requires a flat surface to make an accurate reading. There may be a variance in durometer readings of ±10 Shore A or D when lining is pressure cured in an autoclave or in an open atmospheric steam; or ±15 for a chemical-cured lining.

Pinholes. To detect pinholes and otherwise determine a lining's integrity, a high-voltage holiday detector or spark tester is used. A spark tester consists of a wand to which an electrical voltage is applied. The wand is passed over the lining at a rate of approximately one foot per second. Where there is a pinhole or other form of discontinuity in the lining, the current will pass through the discontinuity to the underlying steel and set off an alarm. But the current emanating from the tip can also pass through the lining to the pipe, if excessive voltages are applied. Thus, a spark tester used by anyone other than an experienced inspector can severely damage a lining. Precautions must be taken when using a spark tester. The possibility of damage must be weighted against the benefits of its use as an inspection instrument. This test is usually performed only on large-diameter pipe, NPS 24 (DN 600) or larger, or on small diameter pipe, NPS 6–8 (DN 150–200). Special equipment is usually required to ensure that the spark tester can reach all areas inside the long lengths of the pipe. It is quite imperative that the spark voltage settings are proportioned to the thickness of the lining to be tested. The following range of voltages are recommended:

Lining Thickness	**Minimum Voltage**
⅛ in (3.2 mm)	6250–8500 volts minimum
3⁄16 in (4.85 mm)	10,000–12,500 volts minimum
¼ in (6.4 mm)	12,500–15,000 volts minimum

Materials such as neoprene- and graphite-loaded linings require even lower voltage ranges; 7500 volts for ⅛ in (3.2 mm) and 3⁄16 in (4.85 mm); and 10,000 volts maximum for a ¼ in (6.4 mm) thickness. Spark testing should be performed only when it is considered necessary. Frequent spark testing may lead to extensive repair work. Used linings generally have reduced electrical resistance, especially after several years of service. Where salts have saturated the surface, or the solution has penetrated the lining, spark testing becomes more sensitive. Cracked linings also have a loss of gauge in the cracked area. In these cases, spark testing must be done with extreme caution, with a very low voltage setting.

The spark-testing equipment must be kept constantly moving; otherwise it could burn through the lining and create pinhole leaks. A leak would be seen as a white or blue arc jumping from the spark tester wand through the lining to the metal. If a leak is detected, this area should be marked and repaired prior to curing.

Maintenance

Rubber-lined pipe can be a large investment for a company. Thus, proper care and maintenance are always recommended. An experienced applicator can offer many detailed suggestions. Some basic considerations of maintenance are: avoid impact, such as can occur from dropped tools; prevent exposure to sunlight and outdoor weathering; and protect from sudden temperature changes, which may cause thermal stresses that result in cracking, especially in hard rubber linings.

LINING SELECTION CONSIDERATIONS

Thickness Selection

Lining thickness may vary from ⅛ to ¼ in (3 to 6 mm). In some very abrasive conditions, up to 1 in (25 mm) has been applied. Experience has proved that not only the rate of abrasion must be considered but temperature also. For temperatures greater than 140°F (60°C), ¼ in (6 mm) thick lining will provide better service. Table B11.8 shows the recommended maximum lining thicknesses for different pipe sizes.

The most commonly used and economical lining thickness is ¼ in (6 mm). It offers long life for a wide range of applications.

Material Selection

The most important factor in selecting the right lining material is specific *chemical resistance* that will be required. The manufacturer must be consulted early in the specification process to ensure the right lining for the application. This subsection describes the most common elastomers used in pipe lining.

TABLE B11.8 Recommended Maximum Lining Thicknesses

	Lining thickness, inch (mm)				
Pipe Size NPS (DN)	¼ (6.4)	⅜ (9.53)	½ (12.7)	¾ (19.1)	1 (25.4)
2 (50)	X				
3 (80)	X				
4 (100)	X				
6 (150)	X	X			
8 (200)	X	X	X		
10 (250)	X	X	X		
12 (300)	X	X	X	X	
14 (350)	X	X	X	X	
16 (400)	X	X	X	X	
18 (450)	X	X	X	X	
24 and larger (600 and larger)	X	X	X	X	X

The second most obvious consideration in rubber lining is *abrasion resistance*. Generally, the softer the rubber the more resistant it is to *impact abrasion*. The harder the rubber the more resistant it is to *sliding abrasion*. Natural rubber and some other linings can be compounded over a range of hardness. Often a compromise must be reached between abrasion resistance and chemical or solution permeation (attack). For example, a soft rubber would be more impact abrasion resistant, but a hard rubber may be needed for permeation or chemical resistance. The rubber manufacturer should be consulted in these situations.

Temperature resistance, another important factor, can also depend on the hardness of the rubber lining compound. Hard natural rubber is more temperature-resistant than soft natural rubber; but the temperature resistance of synthetic rubber is determined more by the type of polymer used, such as neoprene and butyl.

Soft elastomeric linings are often considered suitable for temperatures up to 150°F (66°C) and semi-hard or hard linings up to 180°F (82°C). Certain synthetic elastomers can be successfully used to temperatures of 220°F (104°C). The destructive effects of chemicals on linings at elevated temperatures is accelerated. Oxidation and diffusion are more rapid, so the overall life of the lining may be shorter. To enhance the life of linings at elevated temperatures, a thickness of ¼ in (6.4 mm) or more is commonly recommended.

Elastomeric sheet linings resist many chemicals and are considered suitable for the following, subject to both temperature and concentration factors:

- Most inorganic acids, such as hydrochloric, phosphoric, sulfuric, hydrofluoric, and hydrofluosilicic
- Many organic acids, including acetic, tannic, and gallic
- Inorganic salt solutions, including ferric chloride, zinc chloride, tin chloride, sodium cyanide, and ferrous sulfate
- Inorganic bases, such as sodium hydroxide, calcium hydroxide, and potassium hydroxide
- Plating solutions, including nickel, brass, tin, zinc, silver, and cadmium
- Bleach solutions, such as sodium hypochlorite, calcium hypochlorite, and chlorine

Table B11.9 lists some common chemicals and the general polymer used for a lining. The manufacturer of the lining shall be contacted for advice about the proper lining selection. In-service testing may be needed to confirm the suitability of the material selected.

Common Elastomers

A brief description of each of the most common elastomers, with its general chemical resistant properties, is provided in this subsection.

Natural rubber has been used as a protective covering almost since its discovery. It can be produced in many ways, to create soft elastic and resilient compounds, or as hard as an ebonite-type product. The high sulfur, semihard, or hard versions offer vastly different properties. The inherent saturation affected by the high sulfur level creates a lining which exhibits greater resistance to chemical attack and permeation; but is most prone to commodity contamination through leaching of sulfur compounds into the contents of a vessel. Thermal and mechanical shock offer substantial hazards when the hard stock is used; but by compounding, an acceptable

TABLE B11.9 Chemical Resistance of Various Linings

Corrosion Media	°F (°C) Max temp of	Percent Concentration (%)	Nat. Rubber		Butyl	EPDM	Neop.	Nitrile	Hypalon	Urethanes
			soft	hard						
Abrasion	–	–	R				R			R
Acetic acid	140 (60)	100		R	R					
Ammonium sulfate	200 (93)	saturated		R	R		R			
Chlorine gas wet	175 (79)	saturated		R						
Copper cyanide	160 (71)	saturated	R	R						
Ferric chloride	175 (79)	saturated	R	R						
Hydrochloric	125 (52)	37	R							
Hydrofluoric	90 (32)	50			R					
Kerosene	90 (32)	saturated						R		
Nickle chloride	190 (88)	saturated		R	R					
Nitric acid	150 (66)	10			R				R	
Phosphoric acid	140 (60)	85			R					
Sodium chlorite	190 (88)	saturated	R							
Sodium hypochlorite	150 (66)	15			R					
Sodium hydroxide	194 (90)	50			R	R				
Sodium sulfate	190 (88)	saturated	R	R	R					
Sulfuric acid	180 (82)	20			R					
Sulfuric acid	150 (66)	50							R	
Water—fresh	175 (79)			R		R				
Water—salt	175 (79)					R				
Water—mine tailings	120 (49)			R		R				R

R = Recommended for the corrosion medium shown. Additional service conditions, such as exposure to sunlight, must also be considered before a lining is selected.

level of flexibility can be achieved to tolerate these conditions. The harder the rubber lining the better it can withstand higher temperatures.

Natural rubber linings have been known to handle many acids, alkalies, and other corrosive materials; however, strong oxidizing agents such as chromic and nitric acids attack natural rubber with vigor. Another limitation of natural rubber is its inability to withstand hydrocarbons such as benzene, toluene, gasoline, etc.

Natural rubber hardness ranges from 30 to 100 durometer (Shore A) and can withstand temperatures up to 190°F (88°C).

Butyl has gained prominence since its birth for inner tubes, diaphragms, and similar products, because of its excellent low permeability to gases. Butyl has also found wide application in the electrical insulation field because of its inherently good electrical properties and exceptional resistance to deterioration by heat, ozone, and weathering. Another quality in its favor is its extremely low water absorption characteristic. Because butyl has a high degree of chemical saturation, it can be compounded to offer greater resistance to heat and many chemicals, especially the oxidizing acids. But like natural rubber, butyl offers little resistance to petroleum oil and solvents. Butyl linings generally range in the 50 to 70 (Shore A) hardness, and some can be used in high-temperature applications up to 260°F (127°C).

EPDM has excellent weather- and ozone-resistance that is vastly superior to any other comparably priced polymer. It possesses good heat resistance over a wide range with a temperature resistance of 200°F (93°C). Hardness for EPDM linings can range from 50 to 70 durometer (Shore A). EPDM offers good resistance to water, acetic acid, and weak solutions of chromic acid. However, it has been established that even at higher levels of hardness hydrochloric acid will penetrate EPDM and have a destructive effect on the steel without showing any adverse effect on the rubber. This shows that the permeation not only of water but of chemicals is critical in the selection of the lining.

Nitrile rubber linings have gained increasing acceptance based on their exceptional resistance to petroleum products such as solvents, oils, and greases. The temperature resistance is good up to 200°F (93°C). The hardness is moderate to hard, 50 to 90 durometer (Shore A).

Urethane is a unique polymer in that it can be sprayed on. Urethanes can be applied up to several inches thick and offer great sliding abrasion and hydrocarbon resistance, but they lack resistance to many chemicals. Urethanes range in hardness from 50 to 90 durometer (Shore A). The service temperature for urethane is 120°F (49°C).

Neoprene is available in many types and with a variety of uses, which has made it a household name. Neoprene can be compounded to withstand temperatures up to 200°F (93°C) and effectively resist chemical attack by moderate chemicals, such as sodium hydroxide and seawater. It is also known to be moderately oil resistant. Durometer hardness ranges typically between 50 and 70 (Shore A). Neoprene is attacked by strong oxidizing acids and ketones.

Hypalon is a highly versatile polymer, capable of being compounded for excellent resistance to heat, flame, ozone, weather, tear, and abrasion. It offers resistance to oil and grease. Hypalon, because of its resistance to the effects of chemical oxidation, has gained recognition in the handling of chromic acid (10%) and hydrogen peroxide (30%). Operating temperature can be as high as 200°F (93°C). Hardness can be from 50 to 60 durometer (Shore A).

The foregoing guidelines will be useful in selecting the best lining for the service; however, specification writing should only be done after consulting with the lining manufacturer and possibly even testing of various linings in the media.

SUMMARY

Elastomeric linings can effectively protect piping and other components from harshly corrosive and abrasive environments. Rubber lining technology continues to advance with the development of new polymers, application techniques, and equipment.

GLOSSARY

This glossary describes and explains terms related to the manufacture, preparation, application, and testing of rubber and elastomeric lining materials used in the protective linings industry. Many of the terms are used in the specification and application of corrosive and abrasive resistant materials. This glossary includes chemical names, abbreviations, identifications, and colloquial expressions.

Abrasion Resistance. The resistance of a material to loss of surface particles due to frictional forces.

Acid Resistant. The ability to resist the action of identified acids within specified limits of concentration and temperature.

Adhesion. The state in which two surfaces are held together by interfacial forces which may consist of molecular forces or interlocking action, or both. Adhesion values for tank lining are often determined by the procedures described in ASTM D429-Test Methods for Rubber Property-Adhesion to Rigid Substrates.

Adhesion Failure. The separation of two materials at the surface interface rather than within one of the materials itself.

Adhesive. A substance capable of holding materials together by surface attachment.

Age Resistance. The resistance to deterioration by oxygen, heat, light, ozone, alone or in combination, during storage or use.

Antioxidant. Same as age resistor, a chemical compounding material used to retard deterioration caused by oxygen.

ASTM. The abbreviation for the American Society for Testing and Materials.

Autoclave. A pressure vessel used for the curing or vulcanization of rubber parts by means of steam under pressure.

Blasting. Surface cleaning and preparation of substrate using abrasives such as airborne sand, grit, or shot.

Blemish. A superficial mark or impression on the surface of green or cured rubber lining.

Blister. A cavity or a sac deforming the surface of a material usually due to expansion of an entrapped liquid or gas. Permeation failures of tank linings in service are sometimes evidenced by blister formation.

Bond. The union of materials by use of adhesives, usually used in relation to parts vulcanized after attaching or being assembled together.

Bromobutyl. Used in a general sense to mean a bromobutyl tank lining construction. ASTM designation BIIR.

Butt Seam. A seam made by placing the two pieces to be joined edge-to-edge.

Butt Splice. A joint made in a rubber part before or after vulcanization by placing the two pieces to be joined edge-to-edge.

Butyl Rubber. A copolymer of isobutylene and isoprene rubber; ASTM designation IIR; chlorobutyl or bromobutyl rubber is the common name for such materials used in lining.

Calender. A machine equipped with two or more heavy, internally heated or cooled rolls, used for the continuous sheeting or plying up of rubber compounds.

Calender Blister. Trapped air between calender plies of a multi-ply rubber buildup.

Cement. A dispersion or solution of an elastomer or compound in a solvent for use as an adhesive or coating.

Chlorobutyl. Used in a general sense to mean a chlorobutyl tank lining construction. ASTM designation CIIR.

Chlorosulfonated Polyethylene. Generic name of an elastomeric material sold as Hypalon,*™ ASTM designation CSM.

Closed Skive. A reverse angle cut along the edge of a rubber panel. This enables the installer to stitch down the cut edge so that the tie gum is protected from exposure to the commodity contained in a tank.

Cure. Similar to cross-linking, while cure covers all types (sulfur, peroxide, radiation, etc.).

Delamination. Separation or splitting, either between plies in laminated goods or occasionally within the homogeneous part itself.

Durometer. An instrument for measuring the hardness of rubber and plastics. The ''A'' durometer scale is used for flexible materials and the ''D'' for rigids.

Durometer Hardness. A value that indicates the indentation or resistance to indentation of the indentor point of a durometer. High values indicate harder materials. See ASTM D2280-Test Method for Rubber Property-Durometer Hardness.

EPDM. ASTM abbreviation for a terpolymer of ethylene, propylene, and a diene with the residual unsaturated portion of the diene in the side chain.

Ebonite. A term for hard rubber, made by vulcanization of rubber with high levels (greater than 30 parts) of sulfur, where the high hardness is due to the sulfur content.

Elastomer. A polymeric material which, at room temperature, is capable of recovering substantially in shape and size after removal of a deforming force.

Elongation. Extension produced by tensile stress, usually expressed as a percent of original unit length.

Face. The commodity-contacting surface in tank lining construction.

Face Stock. The commodity-contacting stock in a multi-component lining.

Fish Eye. A thin elongated void in a calendered sheet. This slight cosmetic blemish does not affect the service life of the rubber lining.

Gasket. A deformable material clamped between essentially stationary faces to prevent the escape of matter through an opening or joint.

Gauge (Gage). Refers to a dimension, generally the thickness of a product, as measured by a gauge of some type.

Hardness. The measured resistance to indentation of a material.

Heat Resistance. The property or ability of rubber articles to resist the deteriorating effects of elevated temperatures.

Holiday. A small uncovered or noncoated area in a substrate; usually refers to pinholes in thin coatings of rubber sheeting.

I.D. or ID. Abbreviation for inside diameter.

Immersion Testing. Commonly used to determine the resistance of tank lining compounds to various chemicals. See ASTM D 471-Test Method for Rubber Property-Effect of Liquids.

Lap Seam. A seam made by extending the flat edge of one piece of material flat over the edge of a second piece of material.

Light Aging. Deterioration of compounds when exposed to light (direct or indirect, natural or man-made).

NACE. National Association Corrosion Engineers.

Natural Rubber. Rubber formed in a living plant or tree, usually referring to *Hevea brasiliensis.* ASTM designation NR.

NBR. ASTM designation for copolymers of acrylonitrile and butadiene.

Neoprene. Originally the trade name, now the generic name of polymers and copolymers based on chloroprene. ASTM designation CR.

Nerve. The elastic resistance of raw rubber or compounds to permanent deformation during processing. A nervy tank lining will be difficult to lay around tight bends or in corners because of spring back.

Nitrile Rubber. Copolymers of acrylonitrile and butadiene. Same as NBR or Buna-N.

O.D. and OD. Abbreviation for outside diameter.

Off Gauge. Not conforming to specified tolerance on thickness.

Open Seam. A seam in which edges do not meet, forming a void.

Optimum Cure. The time and temperature of cure necessary to develop the desired combination of properties. Several laboratory procedures are available to help determine this point.

Overlap Splice. The edge of a panel which overlaps the end of an adjoining panel. The splice can be open or closed.

Over lay. To add another layer of lining over an in-place tank lining construction. Typical over lays are cap strips and dome ends of tank cars.

Oxidation. The reaction of oxygen with a rubber product, usually accompanied by a change in feel, appearance of surface, or a change, usually adverse, in physical properties.

pH. The measure, on a logarithmic scale of 1 to 14, of the relative acidity or alkalinity of an aqueous solution. Neutral pH (pure water) is 7. Hydrochloric acid would be approximately 1 and sodium hydroxide approximately 13.

Plasticity. The tendency of a material to remain deformed after reduction of the deforming stress to or below its yield stress.

Ply Adhesion. The force required to separate two adjoining plies in a specified width of a rubber product.

Ply Separation. A condition which occurs due to a loss of adhesion between plies.

Polymer. A macromolecular material formed by the chemical combination of monomers having either the same or different chemical composition.

Polymer Chain. The chain of elements that form the basis of the structure of a polymer. The elements may be all carbon atoms, carbon and oxygen, silicone, nitrogen, etc.

Pressure Cure. Vulcanization under pressure.

Profile. Surface profile is a measure of the roughness of a surface which results from abrasive blast cleaning. The height of the profile produced on the surface is measured from the bottom of the lowest valley to the top of the highest peak.

PSI. The abbreviation for pound per square inch.

Qualification Inspection or Test. The examination of samples from a typical production run of products to determine adherence to a given specification for approval to become a supplier.

Quality Conformance Inspection or Test. The examination of samples from a production run of products to determine adherence to a given specification for acceptance of that production run.

Rate of Cure. The relative time required to reach a predetermined state of vulcanization under specified conditions.

Recovery. The degree to which a rubber product returns to its normal dimensions after being distorted.

Reversion. The softening of vulcanized rubber when it is heated too long or exposed to elevated temperatures. It is a deterioration in physical properties. (Extreme reversion may result in tackiness.) This most commonly affects natural rubber linings.

Rubber. An elastomer, generally implying natural rubber, but used loosely to mean any elastomer, vulcanized and unvulcanized. By definition, a material that is capable of recovering from large deformations quickly and forcibly.

Sand blast. To clean with sand or steel grit in a high velocity stream of air.

Seam. A line formed by joining material to form a single ply or layer. A splice.

Semihard Rubber. A term used for hard rubber which when fully cured is flexible and can be bent without shattering.

Shelf Aging. The natural deterioration of rubber articles kept in storage or "on the shelf" under normal atmospheric conditions. This slow deterioration is due primarily to oxygen and ozone attack.

Shelf Life. An expression describing the time a material can be stored without losing any of its properties.

Shore Hardness. A term denoting a hardness value derived from an instrument developed by The Shore Instrument & Mfg. Co., Inc.

Skive. A cut made on an angle to the surface to produce a tapered or feathered edge.

Skive Butt Seam. Two skived edges joined edge-to-edge to form a smooth surface.

Spark Tester. A high-voltage test unit used to detect breaks or holes in a lining.

Specific Gravity. The ratio of the mass of a unit volume of a material to that of the same volume of water at a specified temperature. Specific Gravity is:

grams/cc of material or pounds/ft^3 of material

grams/cc of water (1) pounds/ft^3 of water (62.4)

Specific Volume. The reciprocal (1/Sp. Grav.) of specific gravity. Also expressed as the ratio between the volume of one pound of water and the volume of one pound of material.

SSPC. Abbreviation for Steel Structures Painting Council.

Static Spark. A high voltage of static electricity.

Steam Cure (Open). A method of vulcanizing rubber parts by exposing them directly to steam.

Stitching. A method of joining two pieces of uncured rubber compound together by means of a stitching roller, and a hand held tool comprised of a wheel with a narrow edge which is often serrated. It is commonly used to make tank lining splices.

Substrate. The surface on which a coating or lining is applied.

Surface Preparation. The preparation of a substrate prior to applying tank lining: welding, grinding, blasting, cleaning.

Swelling. An increase in volume or linear dimension of a specimen immersed in liquid or exposed to a vapor.

Tack. The property of a polymer, compound, or adhesive that causes two layers to stick together on application of mild pressure. Tacky polymers or compounds do not necessarily stick to other surfaces.

Tack Cement. A formulated rubber/cement mixture which can be rolled or brushed on surfaces which will hold the rubber panel in place until cure takes place. Normally considered a part of the adhesive system.

Tensile Strength. The maximum tensile stress applied during stretching of a specimen to rupture processed per unit area of the specimen, i.e., psi and mPa.

Tie Gum. An intermediate layer of rubber employed to promote bonding of two surfaces; usually a soft rubber compound.

Vapor Phase. Vapor above the liquid in a tank car or closed storage tank; often the most severe conditions for rubber tank lining.

Vulcanization. 1) An irreversible process during which a rubber compound, through a change in its chemical structure (cross-linking), becomes less plastic and more elastic. Elastic properties are conserved, improved, or extended over a greater range of temperature. 2) It often refers to the reaction of rubber specifically with sulfur, while "curing" covers other methods of cross-linking. Both terms are often used interchangeably.

Weathering. A surface deterioration of a rubber article during outdoor exposure.

White Metal Blast. To send or shot blast a steel substrate to a SSPC No. 5 finish, as specified by the Steel Structures Painting Council (NACE #1).

CHAPTER B12

PLASTIC-LINED PIPING FOR CORROSION RESISTANCE

Michael B. Ferg
Crane Resistoflex
Marion, NC

John M. Kalnins
Crane Resistoflex
Bay City, MI

INTRODUCTION

Plastic-lined piping and fittings consist of a metal housing lined with chemically resistant plastic. The combination of a chemical-resistant engineered plastic liner inside a relatively inexpensive but mechanically strong pipe or fitting housing allows for the safe and economical conveyance of corrosive and dangerous chemicals. For this reason, plastic-lined pipe finds widespread use in such industries as the chemical process, pulp and paper, and metal finishing industries. It is also the desired choice when product purity is of concern, particularly when metal corrosion by-products cannot be tolerated in the process fluid. Industries requiring such purity are pharmaceuticals, food, power generation, and electronics, to name a few. When service conditions are within the capabilities of a plastic-lined piping system, it is often an economical alternative to expensive alloy piping. The methods of lining vary, but all achieve the same goal: to ensure that the liner and housing expand and contract as one unit, even though plastic and metal have greatly differing rates of expansion and contraction.

History

Plastic-lined pipe was first manufactured in the early 1940s and sold commercially in 1948.[1] The first piping system was made by mechanically reducing or swaging a steel tube housing down onto an extruded polyvinylidene chloride (PVDC) resin liner. Initially, plastic-lined pipe was not widely accepted by the chemical processing industries because the PVDC liner could only be used for acids and caustics to a maximum service temperature of 175°F (79°C). As new high-performance resins and different manufacturing techniques were developed, plastic-lined pipe was taken more seriously as a cost-efficient method of fighting corrosion.

Thanks to high standards developed by the various manufacturers in the plastic-lined pipe industry and more than 50 years of success in very aggressive applications, plastic-lined pipe is a proven and accepted piping product wherever corrosive chemicals must be conveyed.

METHODS OF MANUFACTURE

The plastic-lined pipe industry uses both extrusion techniques for melt-extrudable type resins or sintering methods for processing polytetrafluoroethylene[2] (PTFE) powder resins into their final forms. Sintering can be defined as forming a coherent bonded mass by heating a powder without melting it. The following sections provides a brief description of the type of processing used by the various manufacturers of plastic-lined piping products.

Liner Manufacturing Processes for PTFE Liners

Although PTFE fluorocarbon resins are thermoplastic materials, they do not flow readily as do most thermoplastics. Instead when PTFE melts at 647°F (342°C), it changes from a white solid to a transparent rubbery gel. Because of the extremely high viscosity of the melted PTFE, special techniques have been developed for converting granular PTFE resins to finished products. The basics steps common to all of these techniques are

- Compaction of the granular resin at a relatively low temperature into a compressed form so that it can be handled
- Heating of the compacted resin above its melting temperature (commonly called sintering) so that the polymer particles can coalesce into a strong homogeneous structure
- Cooling of the sintered product at a controlled rate to room temperature to achieve the desired degree of crystallinity development

Voids caused by insufficient consolidation of PTFE resin particles during preforming may appear in the finished articles. With reference to a temperature, for example 73°F (23°C), PTFE-liner specific gravities below 2.11 indicate a high-void content. The minimum accepted standard specific gravity as defined in ASTM F 1545 for PTFE-lined pipe is 2.14. Although void content is determined largely by particle characteristics and preforming conditions, sintering conditions can also have an effect. Sintering at too high or too low a temperature can increase void content.[3,4]

A number of processes are used to produce PTFE pipe and fittings liners. These are described below:

Paste Extrusion: This is the original method of producing cold-formed tubing from PTFE resin. PTFE resin is mixed with a lubricant, such as naptha, and is compressed into a dense billet. The billet is loaded into an extrusion chamber and is extruded under great pressure through a die-and-core pin combination. The resultant shape is a tube with a tightly controlled inside and outside diameter. The tube is then heated to drive off the lubricant and then sintered in an oven in a controlled time-and-temperature cycle. The tube may be used as a pipe liner or as a liner for elbows.

Isostatic Molding: This method is analogous to powder-metal sintering, in that the PTFE resin is compressed in special precision molds under great pressure to form a near-net shape. For lined piping products, the shape is either a tube, which will be used as a pipe liner, or a fitting shape, which will be used as a fitting liner. Pipe liners must be produced using special molds that consist of precision-machined cylinders and mandrels. After the PTFE is compressed, it is sintered in an oven in a controlled time-and-temperature cycle. The PTFE liners shrink approximately 3 to 5 percent during the sintering process, so the manufacturer must compensate for this shrinkage in the mold design.

Ram Extrusion: Ram extrusion is a continuous process in which the specially formulated granular PTFE resin is first fed to the charging unit, compacted at room temperature, then heated above its melting point (commonly called sintering) and then cooled back to room temperature. The above sequence of events is carried out in a single piece of equipment (vertical or horizontal) rather than in several operations as is common with other PTFE-forming methods. Succeeding ram cycles cause the compacted resin charges to advance, step by step, through the heated extruder die where sintering takes place. The process allows for the continuous production of extruded PTFE tubing of very controlled wall thickness.[5]

Tape Wrapping: PTFE resin is compressed into a billet from which a continuous narrow thin tape is *skived,* resulting in a tape very nearly identical to pipe thread sealant (plumber's tape). This tape is then wound crossways around a long mandrel in many layers, building a thickness that will eventually be the liner thickness. The tape-wrapped mandrel is put into a sintering oven, and a time-temperature cycle sinters the PTFE into a continuous tube.

Thermoplastic Liner Manufacturing

The other widely used thermoplastic liners such as polypropylene (PP), polyvinylidene fluoride (PVDF), and perfluoroalkoxy (PFA) are melt processed and are either extruded in tube form for piping or injection or transfer-molded for fittings, spacers, and valves.

Pipe and Fitting Lining Techniques

Pipe Lining. The key to successfully manufacturing lined pipe is to combine the plastic liner with a metal housing such that the two will expand and contract as one, particularly when subjected to thermal changes common to the chemical process industry. There are a number of methods for inserting the liner within the steel pipe, used by various manufacturers. Each has its benefit as well as its limitations. They are as follows:

The first patent for lined pipe was granted in 1962[6] for a process by which an oversized liner is first drawn through a sizing die directly into a flanged pipe housing. The liner is allowed to expand against the housing by heating the pipe and liner in an oven that is programmed to provide a carefully controlled time-and-temperature cycle. This method first induces stresses into the liner, then relaxes those same stresses in the oven. The result is a liner which is locked into the housing, providing thermal stability and vacuum resistance. A modified oven cycle for pipe that can be field fabricated results in a moveable liner that exhibits the same thermal stability and vacuum characteristics as the locked-in liner.

Another method involves inserting an oversized plastic liner into an oversized steel tube and then mechanically reducing (swaging) the steel down onto the liner to lock it in place, thus imparting a compressive force on it. The interior of the steel tube is roughened (picked) for the thermoplastic liners and grooved for PTFE. The picking helps anchor the liner and the grooves create an internal venting system for the PTFE lined product.

This manufacturing technique literally grips the liner and facilitates the plastic and steel to act as a single unit during thermal cycles. The amount of compression imparted to the plastic liner is easily demonstrated by measuring the liner push-out resistance of a swaged spool versus that manufactured by other techniques.

The last method is by simply placing a loose liner into a steel pipe housing. Although this method may serve the function of having a liner within the pipe, practice has shown that such lined systems do not perform well under thermal cycle conditions and can lead to premature failures.

Lined Fittings and Valves. PTFE fitting liners may be isostatically molded one of two ways:

- Outside the housing in special molds, which allows for quality assurance checks on the liner after molding
- By using the actual fitting as the mold, which eliminates the need for special molds.

The thermoplastic liners such as PP, PVDF, FEP, (perfluoroethylene propylene) and PFA are lined by traditional extrusion, injection molding, or transfer-molding techniques. The casting or fabricated-steel fitting is fitted with an internal mold that creates an annular space between itself and the metal housing. The melted plastic is injected into the annular space to form the actual lining. Unlike pipe, the sealing plastic face is molded in place as the fitting is being lined. The result is a seamless plastic with uniform wall thickness.

Spacers. Thermoplastic spacers are used as transition pieces when mating plastic-lined pipe or fittings next to other types of pipe equipment such as alloy piping, tanks, or pumps. Their purpose is to provide a firm surface against which the plastic-lined pipe end forms a positive seal. The bore of the spacer is equal to the inside (ID) diameter of the plastic-lined pipe with which it is used. The spacer also protects the plastic-lined pipe end (flared face) from damage which may be caused by imperfections in the surface of the dissimilar material. Often a gasket is added between the spacer and the dissimilar material to assist in providing a good seal and to protect the surface of the spacer. Spacers are generally first injection molded into 0.5-in-(12.7 mm) thick panels, and then separate panels are pressure formed to each other to form a solid plastic block of a desired thickness. The solid plastic block can now be machined to create a specific spacer type. PTFE spacers are available in solid plastic form in a ring or full-face configuration, or with a steel or ductile-iron housing. Solid PTFE spacers are machined from sintered cylindrical billets. For extra mechanical strength, solid PTFE spacers made with glass-filled resins are also available.

When connecting lined pipe to an unlined flat-faced flange, use a minimum 0.5-in-(12.7 mm) thick plastic spacer of the same material as the plastic liner for NPS 1 (DN 25) through NPS 8 (DN 200) pipe sizes and at least a 0.75-in-(19 mm) thick spacer for NPS 10 and 12 (DN 250 and 300) pipe. For installing butterfly valves, use tapered bore spacers with the larger bore adjacent to the valve side. Use blind spacers when blanking off lined pipe, fittings, or valves. For small-angle direction changes, use a tapered face spacer. If in doubt about the spacer material, one can always use a reinforced PTFE spacer, as it will handle all temperatures and all but a few chemical systems.

For a full listing of the types of spacers available, consult the manufacturer. Also, spacers may be used only in accordance with the applicable piping code requirements.

Finished Pipe Fabrication

Flange-end options for lined pipe are dependent on the type of method used to fit the liner into the steel housing. For lined pipe that is swaged, a threaded-chamfered flange or a threaded-chamfered stub end fitted with a rotatable flange is screwed onto the pipe end. Although threaded flanges can also be used with all other pipe housings, a rotatable flange is typically used on other fabrication methods, and the steel pipe end is then flared. Other pipe end options can include lap-joint stub ends with rotatable flanges, or welded flanges.

The plastic flared face is now simply made by heating the exposed plastic stub and then flaring or molding it against the flange or flared-steel pipe end. For swaged lined pipe, the steel housing is cut through to just where the plastic shows and the steel collar removed to expose the plastic-liner stub end. For flared pipe, a longer liner is inserted into the steel pipe housing and then cut to the desired length. For pipe lined with thermal-expansion methods, the pipe is already flanged, and enough liner extends beyond the flange ends to make the flares.

Quality Control

Each plastic-lined pipe and fitting is subjected to a 10,000-volt minimum electrostatic test prior to shipping so as to ensure that the liners do not contain any defects. A visible or audible spark that occurs at the probe when an electrical contact is made with the housing indicates the presence of a defect in the liner and is cause for rejection. A 425-psig (2930 kPa) hydrostatic test is an acceptable alternative to the electrostatic test. The sealing surface of the liner is also to be free of any defects that would impair sealing effectiveness. Other quality checks such as metal-and-plastic traceability, mil certs, length, liner type, and pipe size are noted to make sure that the part being shipped meets with the requirements as listed on the order. Special requirements such as on-site inspections, X-ray inspection of welds, and hydrostatic tests are also accommodated. All pressure-containing welds in the steel housings are made by welders certified to the ASME Boiler and Pressure Vessel Code, Section IX, and subject to the provisions therein.

LINER MATERIALS

Plastic lining materials fall into two main categories: fluorinated plastics and nonfluorinated plastics. Fluorinated plastics are either fully fluorinated, as in the case of polytetrafluoroethylene (PTFE), perfluoroalkoxy, and perfluoroethylenepropylene, or partially fluorinated, as in the case of ethylenetetrafluoroethylene (ETFE) and polyvinylidenefluoride. It is the fluorine-carbon bonding of these materials that provides the outstanding resistance to chemical attack. In fact, the fully fluorinated plastics exhibit better chemical resistance than virtually any other material, including other metals, plastics, or composites. They also possess[7]

- High thermal stability
- Resistance to sunlight degradation
- Low smoke and flame characteristics
- Resistance to fungus and bacteria build-up

They generally have

- Low permeability to most gases and liquids
- High purity in the virgin form
- Processibility, formability, and moldability
- Cold weather impact strength
- High abrasion resistance
- Low coefficients of friction
- Approval for food contact use

The nonfluorinated plastics, polypropylene (PP) and polyvinylidene chloride (PVDC), are more general purpose materials that provide good overall chemical resistance. They have lower temperature and chemical resistance than the fluoropolymers and are generally less expensive.

Liner Types

Polytetrafluoroethylene (PTFE). PTFE was originally developed by DuPont in 1938, and was first utilized as a hose and pipe liner in the 1950s. (DuPont markets PTFE under the Teflon tradename, but other manufacturers use their own trade names such as Fluon, Hostaflon, Algoflon, and Polyflon.) PTFE is fully fluorinated and thus virtually inert to most chemicals.

Fluorinated Ethylene Propylene (FEP). FEP was introduced in 1960 as the first melt-processible resin that matched the chemical resistance of PTFE. FEP is marketed under the DuPont trade name of Teflon FEP, and by others such as Hostaflon and Algoflon. The temperature handling capability of FEP, however, is less than PTFE or PFA. It can be used from −20°F (−29°C) to 300°F (149°C). With the advent of PFA in 1972, FEP found fewer applications in the lined-pipe industry. FEP lined piping is offered by a few manufacturers on special order. FEP is still widely used, however, in other product forms, including solid tubing, corrosion-resistant film, and cable and wire insulation.

Perfluoroalkoxy (PFA). PFA is a chemically modified polymer of PTFE that exhibits the same chemical resistance and temperature-handling capabilities as PTFE. It was developed by DuPont in 1972 as a melt-processible high-temperature fully fluorinated plastic. PFA is also marketed by DuPont under the trade name of Teflon PFA, and by others as Hostaflon PFA and Neoflon. Although the cost of PFA resin compared to PTFE is appreciably higher, it still finds utility as both a pipe and fitting liner. PFA has found broader acceptance in other related product forms, including corrosion-resistant plastic-lined pumps, valves, and solid plastic tubing. As with PTFE, PFA can be used in cryogenic services when the housings and flanges are stainless steel. PFA costs 3 to 4 times that of PTFE.

Ethylenetetrafluoroethylene (ETFE). ETFE is a partially fluorinated plastic copolymer of ethylene and PTFE and is marketed by DuPont under the trade name Tefzel. Other tradenames are Hostaflon ET, Aflon COP and Neoflon. ETFE exhibits better chemical resistance and temperature-handling capability than any other plastics except PTFE, PFA, and FEP. ETFE is offered as a liner for both pipe and fittings, and has a service-temperature range of −20°F (−29°C) to 300°F (149°C). ETFE can be specified for lower service temperatures in conjunction with stainless steel housings. For the chemical resistance of ETFE to various chemicals, please see Table B12.1. ETFE has about the same cost as PFA.

Polyvinylidene Fluoride (PVDF).[8] Homopolymer PVDF is a partially fluorinated polymer that is marketed by Elf Atochem North America and Ausimont under the names KYNAR and Hylar, respectively. Other manufacturer's, tradenames are Solef, Neoflon, and KF. Elf Atochem also markets a copolymer of polyvinylidene fluoride and hexafluoropropylene (PVDF/HFP) under the tradename of KYNAR Flex. PVDF exhibits excellent chemical resistance to many chemicals and has a service-temperature range of −20°F (−29°C)(regardless of housing material) to 275°F (135°C). Homopolymer PVDF is widely used for piping conveying halogenated compounds but should not be used in any service where the pH is above 11. The PVDF/HFP copolymer has a higher mole percent fluorine and, as a result, can tolerate solutions of pH up to near 13. For the chemical resistance of PVDF to various chemicals, please see Table B12.1. PVDF also cannot tolerate esters, ketones, or aldehydes.

Polypropylene (PP). Polypropylene is a good general purpose lining material that exhibits good chemical resistance to a wide variety of chemicals in the temperature range of 0°F (−18°C) (regardless of housing material) to 225°F (107°C). PP is generally used to convey inorganic acids such as hydrochloric and sulfuric as well as caustics such as sodium hydroxide. PP is readily attacked by free chlorine and should not be used in this service or other services where free chlorine may be generated in an upset condition. Chlorinated hydrocarbons can cause swelling and softening at elevated temperatures. Another sometimes observed attack is thermal oxidative degradation of PP, as caused by 93% and greater sulfuric acid concentrations. For the chemical resistance of PP to various chemicals, please see Table B12.1.

Polyvinylidene Chloride (PVDC). PVDC has the lowest temperature limit of the standard lining materials and is known by the trade name SARAN. Its use as a lining was discontinued at the end of 1996. PVDC found widespread use in the water treatment and pulp and paper industries, as it had particularly good chemical resistance towards chlorine. Although the service temperature range for PVDC is 0°F to 175°F (−18°C to 79°C), it required special handling when the shipping, handling, and storage temperatures dropped to below 40°F (4°C). For the chemical resistance of PVDC to various chemicals, please see Table B12.1.

TABLE B12.1 Chemical Resistance of Liner Material

Liners made from PTFE and PFA are resistant to the following chemicals to 450°F (232°C).
Liners made from FEP are resistant to the following chemicals to 300°F (149°C).

Liner material maximum-use temperature (°F)				
Chemical	ETFE	PVDF	PP	PVDC
Acetic acid (glacial)	230	NR	70	125
Acetone (10%)	150	75	120	75
Ammonia (dry gas)	300	NR	140	—
Ammonia aqua (30%)	230	175	150	—
Amyl acetate	250	125	NR	125
Benzene	212	170	NR	75
Bromine liquid	150	150	NR	NR
Chlorine liquid	212	200	NR	NR
Chlorine gas	212	175	NR	75
Chlorine dioxide (15%)	250	150	NR	125
Chlorosulfonic acid	75	NR	NR	NR
Cyclohexane	300	275	NR	125
Diethylamine	230	70	120	NR
Ethyl acrylate	212	70	NR	—
Formaldehyde (37%)	230	120	140	125
Formic acid	275	250	140	150
Hydrochloric acid (10%)	300	275	185	175
Hydrochloric acid (20%)	300	275	175	175
Hydrochloric acid (36%)	300	275	150	—
Hydrofluoric acid (35%)	275	250	200	175
Hydrofluoric acid (100%)	230	212	70	NR
Hydrogen peroxide (30%)	250	212	70	125
Hydrogen peroxide (90%)	150	75	70	125
Methyl ethyl ketone	230	NR	70	NR
Methylene chloride	212	70	70	NR
Nitric acid (10%)	212	225	150	150
Nitric acid (50%)	150	120	70	125
Nitric acid (90%)	NR	NR	NR	NR
Phenol	212	120	140	75
Phosgene (gas or liquid)	212	120	NR	—
Phosphoric acid	275	250	225	125
Propyl alcohol	212	120	140	150
Sodium hydroxide (10%)	230	NR	225	150
Sodium hydroxide (50%)	230	NR	225	75
Sodium hypochlorite	300	125	150	125
Sulfuric acid (30%)	300	230	200	75
Sulfuric acid (50%)	300	230	125	NR
Sulfuric acid (93%)	300	200	NR	NR
Sulfuric acid (98%)	200	120	NR	NR
Sulfuric acid—fuming	120	NR	NR	NR
Toluene	250	170	NR	75
Trisodium phosphate	275	275	150	150

To convert from °F to °C, subtract 32 and multiply by 5/9.

Polyethylene (PE). Polyethylene is not truly used by the plastic-lined pipe industry as such but is offered as a retrofit liner as a low cost option for refurbishing already installed carbon steel piping. The polyethylene liner is drawn into the steel pipe in a buckled form and then expanded out to the steel shell with heat and or pressure. Polyethylene has <180°F (82°C) temperature capability but has reasonable chemical resistance.

Selection Criteria

The piping-design engineer should specify the most economical liner material that is suitable for the given service conditions. The specifier must know the major and minor chemical(s) to be piped, as well as the concentration and operating temperature, in order to select the proper liner. By consulting published data for chemical resistance of plastics, the end user can choose an appropriate liner material. See Table B12.1. All lined-piping manufacturers publish chemical resistance charts for their plastic-lined piping products. Other factors, such as vacuum-handling capability, liner thickness, and reputation of the manufacturer, often influence purchasing decisions.

Liner Identification

Liners are color coded per the standards set by the APFA (American Pipe and Fittings Association) to allow for easy identification by the end user. See Table B12.2 for colors used.

TABLE B12.2 Polymer Standard Specifications*

Lining material—resin type	Standard resin specification	Allowable resin classification	Standard liner color	Maximum filler material (by weight)
Polypropylene	ASTM D 4101	Type I and II	Orange	<30% glass fiber
Poly (vinylidene chloride) (PVDC)	ASTM D 729		Gray	<20% glass fiber
Poly (vinylidene fluoride) (PVDF)	ASTM D 3222		Black	
Poly (vinylidene fluoride) Copolymer (PVDF)	ASTM D 5575		Black	
Polytetrafluoroethylene (PTFE)	ASTM D 1457 ASTM D 4894 ASTM D 4895		White	
Perfluoro (ethylene-propylene) Copolymer (FEP)	ASTM D 2116	Type III	Green	
Perfluoro (alkoxyalkane) Copolymer (PFA)	ASTM D 3307	Type II	Natural	
Ethylyene tetrafluoroethylene copolymer (ETFE)	ASTM D 3159	Type I	Natural	

* A maximum of 1% by weight of additives or colorants, or both, is permissible. Colorants, if used, shall be identified in the manufacturer's specification.

Clean reworked resins may be used, provided all mechanical property requirements are maintained. Only virgin PTFE resin may be used.

DESIGN CONSIDERATIONS

Installed Cost Comparisons

Specification of a corrosion-resistant piping system is a complex assignment, if for no other reason than the large number of available materials that vary both in cost and performance. The materials-selection phase usually yields a number of piping candidates that will perform adequately from a technical standpoint. Then a choice is made from the candidates on an economic basis. Three types of cost comparisons are common:

Material cost

Initial installed cost

Long-term life-cycle cost.

Many specifiers limit their economic analysis to materials costs only because they are relatively simple to estimate. Yet this approach poses a very real danger because it ignores what is often well over half of the true required investment for a piping system, that is, the in-place cost of the system, including fabrication and installation costs.

Many types of corrosion-resistant piping have relatively high material costs because they are supplied from the manufacturer in the form of prefabricated components. This, however, makes these materials relatively less expensive to install. Conversely, many piping systems with low material costs often require the additional expense of fabrication at the job site prior to installation.

A widely used formatted study[9] presents a comparison of initial installed costs for a broad variety of corrosion-resistant piping systems. It provides the engineer with a screening tool to help narrow the field of candidates for a piping project so that a final detailed economic study can be made on the specific piping arrangement under consideration. Factors considered in the study are: type of piping used, material costs, complexity of the piping system, fabrication and erection techniques, and labor rates and productivity in installation. Table B12.3 summarizes the installed cost ratios from the most recent publication for a NPS 2 (DN 50) complex piping system. The report list cost ratios are for NPS 2, 4, and 6 (DN 50, 100, and 150) piping layouts for both straight-run and complex arrangements.

A plastic-lined metallic piping system offers clear advantages over both metal and solid-plastic piping systems. Compared to a piping system consisting of corrosion-resistant metal, plastic-lined pipe provides equal or better resistance to chemical attack, depending on liner material. When comparing the installed cost of a flanged plastic-lined metallic piping system to a welded metallic piping system, the plastic lined system is often lower. See Table 12.3. This is especially true when comparing plastic-lined pipe to metal systems of higher alloy materials.

Compared to a plastic system made from the same material as the plastic liner, plastic-lined pipe provides higher service capabilities as well as higher mechanical strength. Plastic-lined piping systems are also available in a wider range of line sizes, with a broader selection of fittings, when compared to solid thermoplastic or thermosetting systems.

Plastic-lined pipe is not only used where chemical attack is a concern, it is also used where media contact with metal is detrimental, as in the case of ultra-pure chemicals and deionized water used in various processes in the electronics industry.

TABLE B12.3

Installed cost ratio (carbon steel as 1.00) of plastic-lined piping and other selected piping materials. Cost ratios based on a shop-fabricated complex system NPS 2 (DN 50) and 400 ft (102 m).

PIPING MATERIAL COST RATIOS			
PVC (sch 80)	0.56	PTFE-lined FRP	3.20
CPVC (sch 80)	0.63	Monel (Sch 40)	3.24
		Alloy 20 (Sch 40)	3.32
Carbon steel (Sch. 40)	1.00	Nickel (Sch 10)	3.34
304L S.S. (Sch. 10)	1.13	Hastelloy C-276 (Sch 10)	3.52
Rubber-lined steel (Sch 40)	1.16		
316L S.S. (Sch. 10)	1.20	PTFE-lined 304L SS (Sch 10)	4.12
304L S.S. (Sch. 40)	1.31	Nickel (Sch 40)	4.27
316L S.S. (Sch. 40)	1.45	Titanium (Sch 10)	4.46
		Hastelloy C-276 (Sch 40)	4.46
FRP/vinyl ester	1.78		
FRP/epoxy	1.86	Hastelloy B (Sch 40)	5.71
FRP/polyester	1.86	Zirconium (Sch 10)	5.95
Polypropylene lined steel (Sch 40)	1.90		
Saran lined steel (Sch 40)	1.91	Zirconium (Sch 40)	7.04
PVDF-lined steel (Sch 40)	2.47		
Alloy 20 (Sch. 10)	2.60		
Monel (Sch 10)	2.61		
Glass-lined steel (Sch 40)	2.69		
PVDF (Sch 80)	2.71		
PTFE-lined steel (Sch 40)	2.94		
Titanium (Sch 10)	2.99		
FEP-lined steel (Sch 40)	2.99		

Available Pipe Sizes

Corrosion-resistant lined pipe is widely available in NPS 1 to 12 (DN 25 to 300), with larger diameters up to NPS 24 (DN 600) available, but with limited liner-material selections. Except as otherwise noted, this discussion will focus on sizes NPS 1 to 12 (DN 25 to 300). Straight sections of pipe are available as standard and custom-length pipe spools. Standard spool lengths are 20 ft (6m), with 40-ft (12m) sections available when flange minimization is desired. A complete selection of plastic-lined metal fittings is available to include elbows, tees, reducing tees, instrument tees, crosses, 45-degree laterals, concentric and eccentric reducers, reducing flanges, and blind flanges. For examples of lined-pipe and fittings, see Figs. B12.1 and B12.2.

Metallurgy and Pressure Capabilities

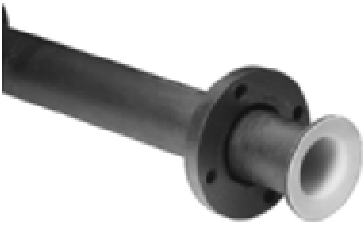

FIGURE B12.1 Small photo of lined pipe flanged end. (*Courtesy of Crane Resistoflex*)

Plastic-lined pipe and fittings are available in cast iron, ductile-iron and steel housings, and ANSI or ASME Class 125, 150, and 300 ratings respectively. The pressure-temperature ratings for ASME B16.5 Class 300 housings are down-rated to account for the safe-working pressure limit of the flared plastic. The pressure and temperature ratings for these housings are as listed in Fig. B12.3.

Plastic-lined piping systems are rated for ASME Class 150 service. ASME Class 300 flanged systems are available, but they do not carry the true ASME Class 300 rating. This is because the sealing pressure required to meet ASME Class 300 requirements are beyond the mechanical capabilities of the plastic flared faces. Consult the manufacturer's literature for pressure and temperature limitations.

Temperature Limitation

All plastic-lined piping systems have a minimum- and maximum-use temperature that must not be exceeded. These use-temperature limits are derived from the various resin manufacturer's testing and are found in Table B12.4. These temperature limitations are always well below the melt temperature of the liner material. In the cases of PTFE, PFA, and FEP, the maximum-use temperatures apply to virtually all chemicals. In fact only a few chemicals attack these plastics, namely, molten alkali metals, elemental fluorine, and chlorine trifluoride, all at high pressures and temperatures above 500°F (260°C).

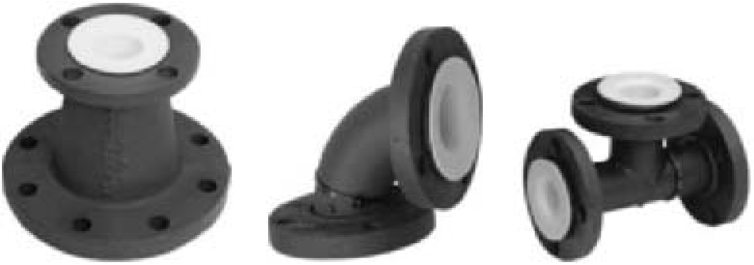

FIGURE B12.2 Concentric reducer, elbow, and tee. (*Courtesy of Crane Resistoflex*)

In the case of all other plastic-lining materials, resin manufacturers have gathered test data that indicates above which temperature limit various chemicals will either swell, react with, or degrade the lining materials. These temperatures are referred to as *rated* temperatures for use with particular chemicals. Below these recommended

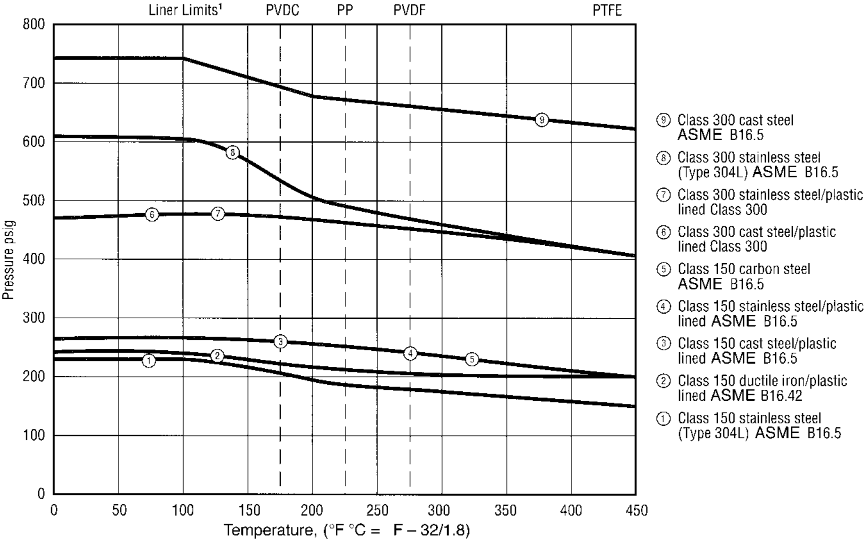

FIGURE B12.3 Working pressures for ASME Class 150 and 300 plastic-lined pipe and fitting. (*Courtesy of Crane Resistoflex*)

limits, the chemical media will not swell, react with, or degrade the liner, and thus the liners can be safely specified for use. Just as there are high temperature limits, liners should not be used below the recommended minimum operating temperatures, as plastics can become brittle and be subject to mechanical rather than chemical failure.

Where a plastic-lining material is rated for less than its overall maximum use temperature, the end user must make certain that the rated temperature will not be exceeded. These situations can occur as a result of upset conditions, unusual ambient conditions, and unplanned exothermic reactions. If the possibility exists that the rated temperature could be exceeded, the end user should specify a different plastic-liner material with a sufficiently high-temperature rating for that chemical service.

TABLE B12.4 Temperature Specifications

Material	Temperature range, °F (°C)
PTFE	−20 to 500 (−29 to 260)
PFA	−20 to 500 (−29 to 260)
FEP	−20 to 300 (−29 to 149)
ETFE	−20 to 300 (−29 to 149)
PVDF*	−20 to 275 (−29 to 135)
PP	0 to 225 (−18 to 107)
PVDC	0 to 175 (−18 to 79)

* Homopolymer and copolymer

Vacuum Capabilities

Vacuum-rating capability in lined-piping products depends on liner thickness, liner-manufacturing process, and pipe-lining process. Typically, most manufacturer's NPS 1 to 8 (DN 25 to 200) material is rated for full vacuum at the liner material's maximum-use temperature. The vacuum capability of different manufacturers NPS 10 and 12 (DN150 and 300) lined piping varies from just-pressure service (no vacuum) to full vacuum capability. Since there is no industry standard for vacuum ratings, it is critical that the end-user consult the manufacturer's literature when considering lined pipe for vacuum service or services which may experience vacuum.

An added precaution regarding vacuum ratings: Piping not rated or designed for vacuum service when installed in vacuum service can lead to liner collapse and failure.

The unplanned or upset condition that induces vacuum can cause failure in nonvacuum-rated piping. Block valves, positive displacement pumps, unexpected rapid cooling, and other conditions can produce inadvertent vacuum conditions in process lines. The design engineer should decide if these scenarios are likely and select lined piping with the appropriate vacuum-handling capability.

Dimensional Compatibility with Other Flanged Systems

Finished lined pipe spools and fittings are measured from plastic-sealing face to plastic-sealing face. Plastic-lined fittings conform to the nominal overall length and center-to-face dimensions as specified in ASME B16.1, Standard for Cast Iron Flanges and Flanged Fittings; ASME B16.42 Standard for Ductile Iron Pipe Flanges and Flanged Fittings; or ASME B16.5 Standard for Flanges and Flanged Fittings. However, it is always a good idea to check with the manufacturer for the applicable dimensions, as some special shapes and systems may have other dimensions.

Joining Techniques

Traditionally, plastic-lined pipe, elbows, branched fittings, reducers, and instrument connections have the plastic liner flared over the flange in order to make connections that seal without exposing the metal housing to the service media. Sealing is accomplished by flaring or molding the liner material out over the metal flange face to form a *formed or flared in place* gasket-sealing surface. See Figs. B12.1 and B12.2. The purpose of this design is to ensure that the service media contacts only the plastic and never the metal. Flanges conform to ASME Class 150 or Class 300 ratings. For pipe spools and fabricated fittings, many types of flanges are available, including lap-joint rotating, slip-on, socket weld, welding neck, and threaded. In the case of a cast fitting, the flange is integral to the casting. The plastic-flared face serves as its own gasket and therefore a gasket is not required. When mating plastic-lined components to other nonlined components, such as carbon steel or alloy piping, fittings, valves, pumps, or vessels, it is recommended that a plastic spacer be used as a transition piece. See Fig. B12.4. However, flanged connections are a potential source of leaks, and new technologies now allow for their significant reductions. See the later section on Flange Reduction Techniques.

Permeation and Venting

Permeation is the migration of small amounts of flow media through the liner wall, in the absence of cracks or continuous voids. It is the product of two functions: the diffusion between molecular chains, and solubility of the permeant in the polymer. If the permeant is as polar as the polymer, or has similar chemically functional groups, it will be more soluble in the polymer.[10] All plastics are subject to permeation, with some plastics exhibiting higher permeation rates than others.[11]

Permeation data relative to chemical handling are very limited because there is no universal laboratory protocol for measuring permeation that generates data applicable to all situations. Care must be exercised in extrapolating the thin-film data frequently found in the literature to the liners used in chemical-process equipment and piping.[12] In general, all other things being equal, pressure and temperature predominantly will drive permeation from a process perspective, and liner thickness and polymer crystallinity from a material viewpoint. Insulation has been determined to help decrease the thermal gradient across the liner and hence decrease the magnitude of permeation.

ASTM F1545 requires components lined with PTFE, FEP, and PFA to be vented (venting is not required for other liner materials) to prevent permeant vapors from collecting between the PTFE liner and the pipe housing. Depending on the manufacturer, venting is achieved by directing the permeant vapors to the pipe ends behind the plastic flare faces, and out at the flanges (Fig. B12.5), or out vent holes drilled through the pipe housing, back from the flanges. All PTFE-lined fittings regardless of manufacturer contain vent holes in the housing. Testing shows that both methods adequately vent permeant vapors in piping lined with PTFE. For piping that will be insulated, the vent hole or flange face must not be blocked. Vent extensions or vented flange covers are available for pipe and fittings that can be insulated.

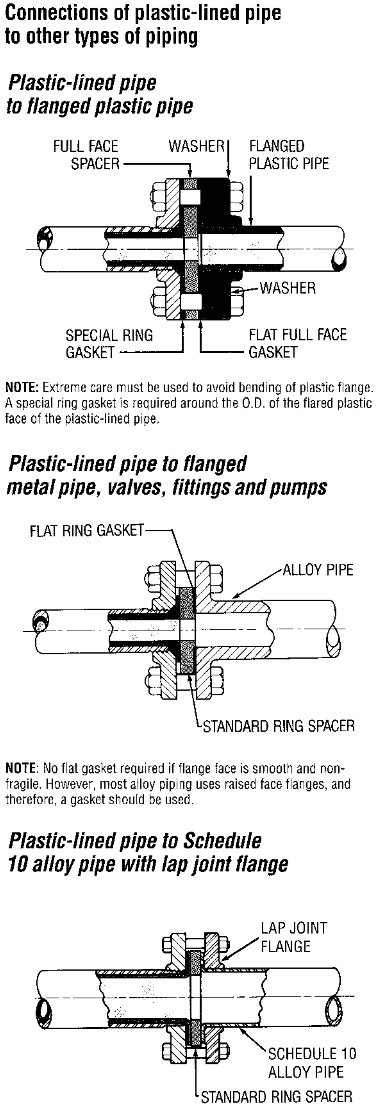
Connections of plastic-lined pipe to other types of piping
Plastic-lined pipe to flanged plastic pipe
FULL FACE SPACER
WASHER
FLANGED PLASTIC PIPE
WASHER
SPECIAL RING GASKET
FLAT FULL FACE GASKET
Plastic-lined pipe to flanged metal pipe, valves, fittings and pumps
FLAT RING GASKET
ALLOY PIPE
STANDARD RING SPACER
Plastic-lined pipe to Schedule 10 alloy pipe with lap joint flange
LAP JOINT FLANGE
SCHEDULE 10 ALLOY PIPE
STANDARD RING SPACER

NOTE: Extreme care must be used to avoid bending of plastic flange. A special ring gasket is required around the O.D. of the flared plastic face of the plastic-lined pipe.

NOTE: No flat gasket required if flange face is smooth and non-fragile. However, most alloy piping uses raised face flanges, and therefore, a gasket should be used.

FIGURE B12.4 Recommended installation of plastic-lined pipe to carbon-steel, alloy and non-metallic piping systems. (*Courtesy of Crane Resistoflex*)

Another situation associated with permeation is the tendency of some permeants

Pipe-to-pipe connections between different joint types

Connection of reinforced flared face to gasketed plastic-lined pipe

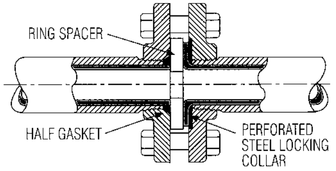
RING SPACER
HALF GASKET
PERFORATED STEEL LOCKING COLLAR

Providing low-angle bend using tapered face spacer

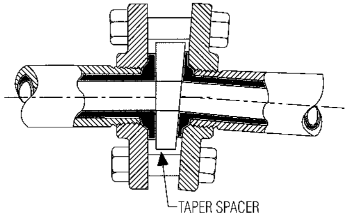
TAPER SPACER

NOTE: Avoid axial forces on this joint. Such forces will tend to push the spacer outward. Consider bent pipe for an alternative to tapered spacers.

Pipe-to-pipe reducing connections

With standard reducing spacer

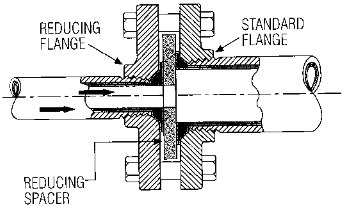
REDUCING FLANGE
STANDARD FLANGE
REDUCING SPACER

With taper reducing spacer

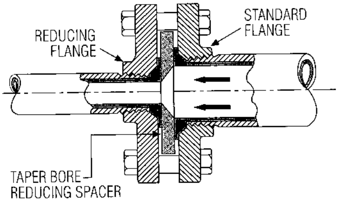
REDUCING FLANGE
STANDARD FLANGE
TAPER BORE REDUCING SPACER

With reducing filler flange

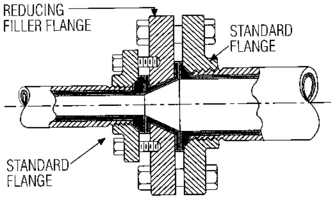
REDUCING FILLER FLANGE
STANDARD FLANGE
STANDARD FLANGE

FIGURE B12.4 (*Continued*)

to form corrosive acids at the interface of the vent because of atmospheric humidity. These acids can attack the area where the vent is located. In systems where permeants are known to corrode the area of the vent location, vents located on the pipe housing can be fitted with a half-coupling with a replaceable sacrificial nipple. This nipple can be periodically replaced.

All other things being equal, a thick liner will reduce the permeation rate when compared to a thin liner. Liner thickness varies by manufacturer, ranging from .100-in (2.5 mm) to .130-in (3.3mm) in NPS 1 (DN 25), to .200-in (5 mm) to .425-in (10.8 mm) in NPS 12 (DN 300). Table B12.5 lists the ranges of PTFE liner thickness that are available. Specific thickness data is shown in each manufacturer's literature.

***Plastic-lined pipe to porcelain, glass or carbon pipe*[1]**

Blanking one outlet of fitting

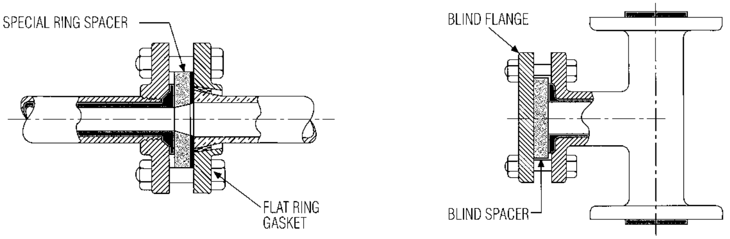

[1] In order to ensure that the special ring spacer supplied has the correct I.D., the I.D. of the porcelain, glass or carbon pipe should be specified on the order or inquiry.

Plastic-lined pipe to glass fiber-reinforced plastic (FRP) flanged fitting or pipe

Valve connections

Plastic-lined pipe to butterfly valve

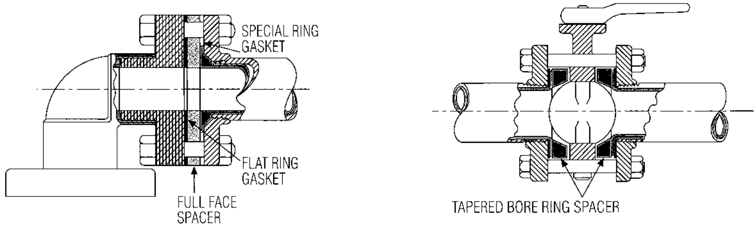

NOTE: Extreme care must be used to avoid bending of FRP flange. Special spacer may be required. A special ring gasket is required around the O.D. of the flared plastic face of the plastic-lined pipe.

FIGURE B12.4 (*Continued*) (*Courtesy of Crane Resistoflex*)

Pressure Drop Calculations[13,14]

In order to calculate pressure drop through lined pipe, the variables of importance regarding the lined pipe are the true inside diameter and the friction factor. The true ID can usually be determined from the metal pipe and liner thickness data in the manufacturer's literature. The friction factor, which is necessary to calculate the pressure drop using the Darcy equation, can be obtained if the Reynolds number and roughness factors are known. Moody diagrams contain many curves for roughness factors. See Fig. B12.6. For lined pipe, use the curve labeled smooth pipes to arrive at the friction factor. It should be noted that flow rates in plastic-lined piping have been kept less than 12 ft/sec (3.7 m/sec), which in turn limit the pressure drop of the system. It has been also suggested to keep gas velocities in lined piping to less than 35 ft/sec (10.7 m/sec). Typical pressure-drop curves for PP, PVDF, and PTFE are shown in (Fig. B12.7).

Abrasion Considerations

In general, plastic-lined piping is not the first choice to solve problems associated with abrasion. Some slurries, however, due to their aggressive chemical nature,

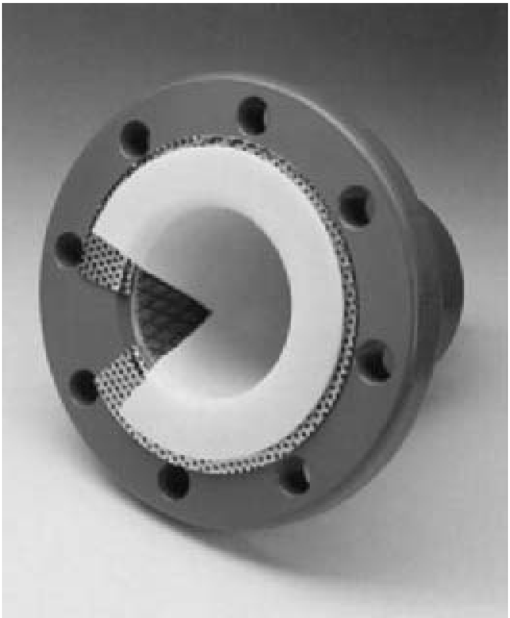

FIGURE B12.5 Swaged pipe and PTFE venting collar system. (*Courtesy of Crane Resistoflex*)

TABLE B12.5 Published PTFE-Liner Thickness Versus Pipe Size

Pipe size NPS (DN)	PTFE-Liner thickness range inches (mm)
1 (25)	0.125 (3.2) − .138 (3.5)
1.5 (40)	0.125 (3.2) − .150 (3.8)
2 (50)	0.125 (3.2) − .160 (4.1)
3 (80)	0.125 (3.2) − .185 (4.7)
4 (100)	0.125 (3.2) − .187 (4.7)
6 (150)	0.145 (3.7) − .275 (7.0)
8 (200)	0.150 (3.8) − 0.315 (8.0)
10 (250)	0.190 (4.8) − 0.325 (8.2)
12 (300)	0.200 (5.1) − 0.425 (10.8)

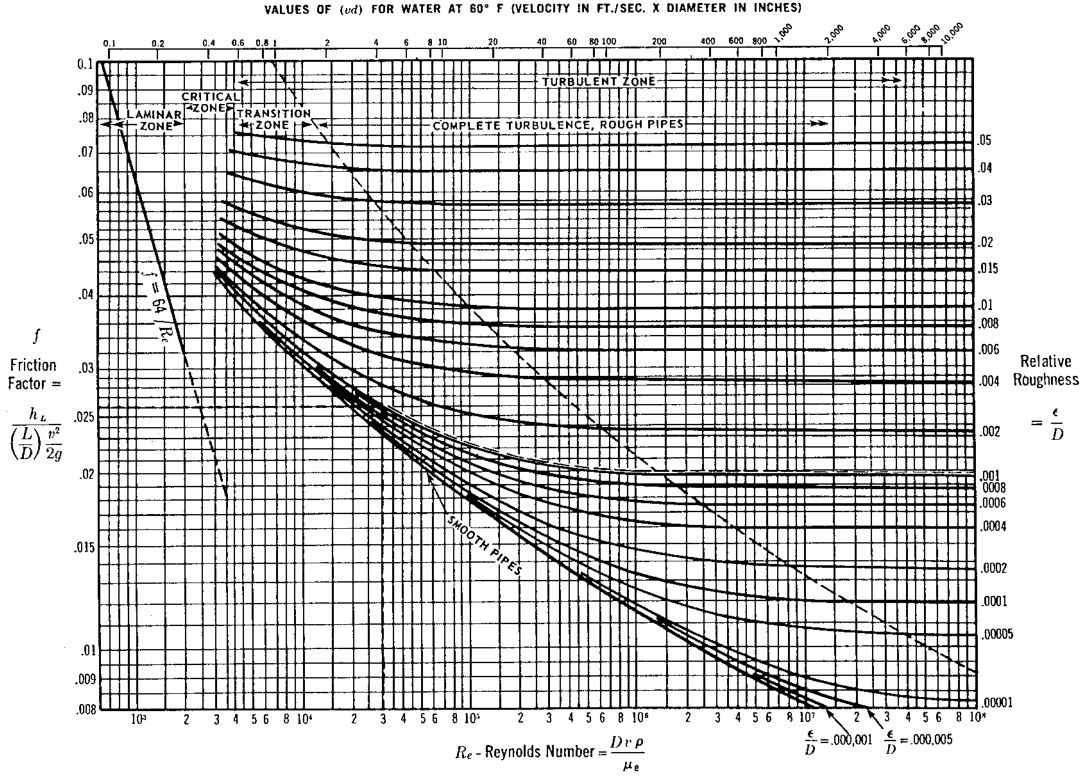

FIGURE B12.6 Friction factors for any type of commercial pipe. (*Reprinted with permission from Crane Valve Group, Long Beach, Calif.*)

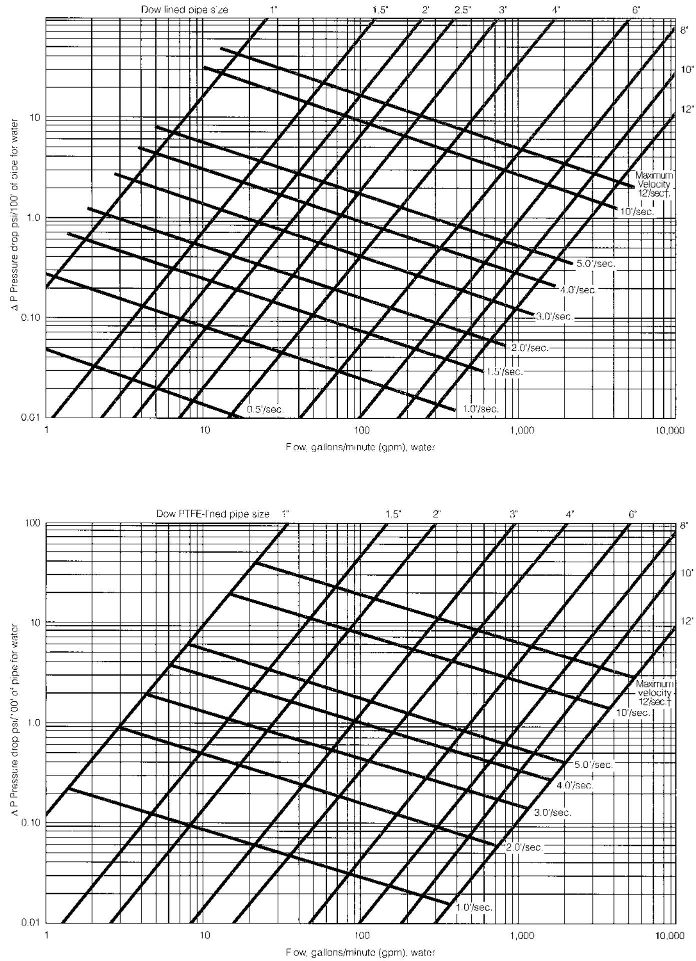

These graphs have been prepared for rapid determination of approximate pressure drop through Dow plastic-lined pipe. These figures plot pressure drop versus water flow rate for the plastic-lined pipe. Pressure drops for liquids with densities other than 1.0 (for water) may be determined by multiplying by the density of the liquid.

Δ P for any liquid =
Δ P water x specific gravity

†At greater velocities, higher turbulence significantly reduces pump efficiency and can cause excessive wear of system components.

FIGURE B12.7 Pressure-drop curves for PP, PVDF, and PTFE-lined pipe. (*Courtesy of Crane Resistoflex*).

require lined pipe. In these cases, it is advisable to design the system so as to minimize the slurry velocity (less than 2 to 4 ft/sec or 0.6 to 1.2 m/s), and the number of changes in direction. Some have found that installing a tee in the place of a 90-degree elbow can minimize liner wear by having the material wear on itself. Other factors such as solids loading, particulate size, and particulate hardness also determine the amount of abrasion that will result from piping a slurry. Since slurries can erode the plastic liner to the point of failure, and the time required to do so depends on many variables, there is no accurate way to predict lined-pipe service life in a slurry situation. If practical, it is advisable to install a test piece in the actual service to determine if lined pipe will be suitable in a given slurry service.

Nonstandard Fittings Configurations

When faced with the need for a plastic-lined component that does not conform to ASME B16.5, B16.42, or B16.1 dimensional requirements, the end user should consider rotationally lined piping products. Components can be rotationally lined with ETFE or polypropylene.

Rotational lining is a process that is not dependent on the fitting or component geometry for a satisfactory lining job. Therefore, an unlimited number of custom fittings, such as two-and three-branch instrument tees, manifolds, reducing elbows, branch elbows, and other complex configurations can be lined with a thick seamless, mechanically bonded liner. See Fig. B12.8.

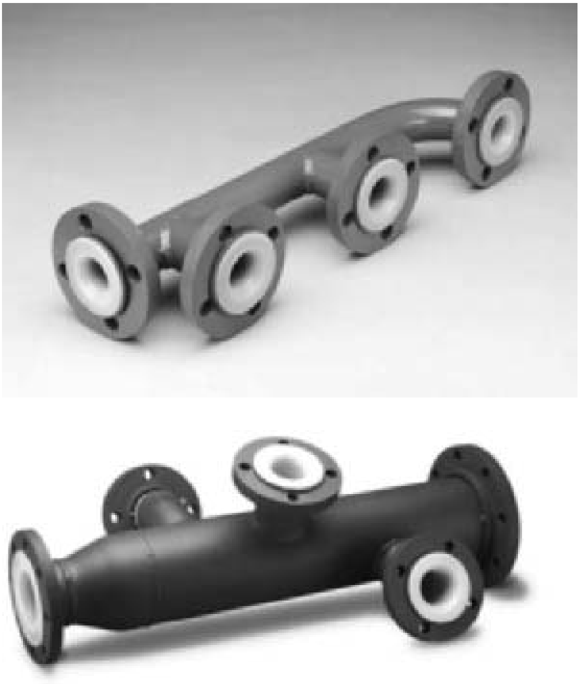

FIGURE B12.8 Rotationally lined custom fittings. (*Courtesy of Crane Resistoflex*)

Powder resin is placed inside the housing, and the flanges are capped with special tooling. The housing is bolted to a spindle that rotates on two axes simultaneously. The spindle rotates in an oven that is heated to the resin's melt temperature, and the resin coats the interior evenly. After the fitting is allowed to cool, the tooling is removed, the flares finished, and the components are hydrostatically or electrostatically tested.

Underground Installations

Direct burial of unprotected plastic-lined steel pipe is not recommended without additional surface preparation. Various systems are available for this purpose, including tar coating and wrapping with a pressure-sensitive PVC tape. The tape should be wrapped with at least a ½-in (12.7 mm) overlay down and back the length of the pipe.

The user should recognize that all manufacturers of flanged plastic-lined piping systems recommend that the flange bolts be checked for tightness on an annual basis. Consequently, for obvious reasons, this is difficult to do if the pipe is buried. However, the flangeless technology option as described later in this chapter does allow for plastic-lined pipe to be considered for burial because of the virtual elimination of flanged connections.

If the pipe is to be buried, proper trench preparation is a must. This is to include depth, width, foundation, bedding, backfill, and earth cover. Backfill should only be done with clean sand containing no rocks or foreign material that could point load onto the pipe surface. Refer to ASTM D2321 for typical guidelines.

INSTALLATION AND MAINTENANCE PRACTICES

Shipping and Handling

Plastic-lined pipe and fittings are shipped with protective end covers made of wood or plastic and are designed to prevent damage to the plastic flared faces. The covers should be left on the pipe and fittings until just before installation time. Plastic caps are also used on plain (not flanged) pipe that is to be fabricated in the field. When moving pipe and fittings with a forklift, never put the forks inside a pipe or fitting, as permanent damage to the plastic liner will likely occur. Either secure the fittings to a pallet, or use a sling arrangement to move lined piping products with a forklift.

Installation

The installation of plastic-lined pipe is similar to that of flanged carbon-steel pipe, but some special precautions must be employed.[15,16,17] The flared plastic ends must be protected until the pipe or fitting is installed.

Bolt Torques. Bolts should be tightened to the manufacturer's published recommended torque values. If lubricants other than those listed by the manufacturer are to be used, a new torque value should be determined or calculated. Lubricants such as copper-based antiseize and nickel-based never-seize have nut factors[18] similar to that of fluoropolymer-coated bolts. Bolting or stud material should be ASTM A193 Grade B7, and nuts should be ASTM A194 Grade 2H. The reason for this is that it is possible to have bolt stress in the 50–70,000-psi (345–483,000 kPa) range which can be above the yield strength of low-and medium-grade bolting materials. The bolt must be able to stretch in its elastic zone in order to properly function at the flanged connection. If a bolt stress exceeds the material yield strength, the bolt will be deformed and result in decreased load being applied to the plastic gasket surface. A calibrated torque wrench should be used to avoid excess torque, which can also permanently damage the plastic flare faces. Bolt threads should be clean and lubricated. Bolting should be tightened in a *star* pattern to ensure even tightening of the flanges. When the initial torque value has been reached for all bolts on the flange connection, continue tightening, using the star pattern, until the bolt torques are at 80 percent of maximum torque value recommended by the manufacturer. After the first thermal cycle, all bolts should be checked and retorqued if necessary. This practice should also be followed on an annual basis and more frequently if the process has frequent thermal cycle swings. Fluoropolymer-coated bolts and nuts are typically used with PTFE-lined stainless-steel piping as many stainless-steel bolting materials are of low- to medium-strength quality.

Gaskets and Spacers. Gaskets are not required for connections of lined pipe to other lined pipe, because the plastic liner is flared out over the face of the flange and serves as its own gasket. Gaskets are recommended, however, when bolting lined pipe up to an unlined raised-face flange or glass-lined or graphite equipment. (Please note that the gasket material must be compatible with the service media.) Again, the emphasis is on protecting the plastic flare face. Special gaskets or spacers may be required when bolting up to dissimilar materials. See Fig. B12.4.

Shop and Field Fabrication. Plastic-lined pipe can be fabricated either in the shop or in the field. Shop fabrication, being the most economical method, is recommended when equipment arrangement is firm and detailed piping drawings are available. In the shop, pipe is cut to exact length, flanges are attached, and the liner ends molded or flared. Each item can be *piece marked* to conform to piping drawings that show the location of each piece for field identification.

Field fabrication should be used when equipment locations and piping lengths may not be firm at the time the pipe is purchased. Procedures for field flaring are specified by each manufacturer.

A compromise is available that allows shop fabrication when equipment arrangement is not firm. The line is completely fabricated in the shop, with the exception of the closure piece, which is supplied for field fabrication to exact length.

Support Requirements. The following are additional items that need to be considered when installing plastic-lined piping:

- Hanger spacing for plastic-lined piping is essentially the same as recommended for carbon steel piping.
- Special attention should be given to the steel wall thickness (Schedule 40, 30, or 20) because this variable will determine the free span.
- Supports such as spring-loaded hangers, clevis-type hangers with adjustable rods, guided support shoes, adjustable pipe stanchions, and pipe-roll support may be considered and should allow freedom of movement resulting from temperature changes.
- In addition, for plastic-lined pipe, it is recommended that each spool be supported near the flange connection for maximum protection against excessive deflection.
- Additional support is recommended where flow changes direction and in areas of high load concentrations such as clusters of valves or fittings.

Thermal Expansion and Contraction. Consideration for thermal expansion must be given to the system and allowances made for expansion and contraction. Where deemed necessary by the engineer or designer, a stress analysis should be done in order to avoid overstressing of piping, fittings, and gasket faces.[19] Thermal expansion can be compensated for by using expansion loops or expansion joints.

Welding. Never weld on plastic-lined pipe or use it as ground for electric welders, as the heat generated could severely damage the liner. Do not flame-cut plastic-lined pipe.

Paint. Lined piping products are generally shipped with a protective primer on the external metallic housing, which is applied at the factory. In many cases, this primer is suitable for compatible topcoats, or it can be sandblasted off for application of paint by the end user. When sandblasting, the end caps protecting the molded or flared plastic face must not be removed, and sandblasting should be directed away from the these plastic pipe ends. If the pipe is to be vented with holes on the pipe or fitting housing, the vent holes must be cleared of any debris so that paint will not plug them. An alternative to the end user applying paint in the field is to have primer, midcoat, and final coat applied at the factory. Special paint capabilities vary by manufacturer due to local emissions limits on the volatile organic content of different paints. The end user should forward all available information regarding the paint, including the end user's internal paint specifications, paint data sheets, and paint-material-safety data sheets. Special paint application by lined pipe manufacturers will generally result in an additional charge to the end user.

Heat Tracing. Handling materials that have high freezing points or high viscosity often requires the use of a pipe tracing system. Four systems that have been successfully used in tracing plastic-lined pipe are:

- Hot water
- Heat-transfer fluids such as Dowtherm
- Electrical resistance
- Steam

Any heat-tracing system used with plastic-lined pipe must be applied in accordance with the manufacturer's written recommendation.

Among the factors to be considered in the selection of tracing methods are the temperature rating of the plastic liner for the intended chemical, service, climate, length of heating season, temperature range to be maintained, length of tracer run, initial costs, operating costs, and need for future expansion

Steam tracing of polypropylene-lined pipe is not recommended, because it requires much more care in design and maintenance. However, the tracing of PVDF, FEP, PFA, and PTFE-lined pipe with steam may be done successfully, keeping in mind the maximum temperature limitations for these liners.

Tracing lined pipe with electrical heating tape has been successful in many applications, particularly those in which continuous heating is not needed. Such tracing is available in strip or cable form. In electrical tracing systems, it is especially important that the temperature-controller sensing device be placed in direct contact with the heating strip or cable to ensure that the maximum operating temperature of the pipe lining is not exceeded. As with the fluid tracing systems, flanges, fittings, valves, et cetera, should be protected from excessive heat losses. Refer to manufacturer's literature for specific recommendations.

As with both steam and electrical systems, it is important that standoff strips or heat transfer cement be used to prevent direct contact and hence hot spots on the pipe. Some installers have found that taping electrical heat tape to the pipe with 2-in-(50.8 mm) wide aluminum tape helps spread the heat.

Hot water and heat-transfer fluids are generally preferred when there is a need for closer control of operating temperatures or to hold them within the temperature limitations of plastic liners. The choice of heat-transfer fluids will depend on the temperature range.

Jacketed-Lined Pipe. Straight-pipe sections are also available with an exterior jacket made from pipe that is typically one size larger than the lined pipe. The jacket is contained with pipe caps the same size as the jacket that are bored out to fit the O.D. of the lined pipe. Inlet and outlet ports are generally half-couplings welded to the jacket. All jacket fabrication and welding on the pipe is done prior to lining of the pipe spool. The heating fluid can be water, steam, or heat transfer fluid. Fittings are generally not jacketed, but separate clamp-on jackets over the standard fitting housings are commercially available.

Insulation. The techniques used in insulating steel pipe can also be used with plastic-lined steel pipe. But, care should be exercised to ensure the integrity of the venting system. For PTFE lined pipe and fittings that are vented via small vent holes, the end-user must specify that vent couplings be welded over the vent holes prior to lining. The end-user then threads a pipe nipple into the vent coupling. The nipple must be long enough to extend beyond the insulation to prevent the blockage of the venting system.

Grounding. Grounding of piping systems is required if a possibility exists for spark generation through the buildup of a static electrical charge.[20] This typically occurs when nonconductive fluids such as xylene, toluene, or hexane are piped in plastic-lined piping. Although metallic or alloy systems may be better suited for this kind of fluid, lined pipe is selected if product purity is of concern or the process fluid has intermittent corrosive contaminants present. Several techniques are used by the chemical process industry to ensure that adequate grounding is achieved. First, it is important toassure that the metallic pipe shell is properly grounded. Two techniques are used to assure continuity to a ground connection. One is to carefully weld stud bolts to the pipe shell and electrically connect separate spools with braided-wire cable. The other is simply to use the flange bolts as an electrical connection[21]. These two techniques simply ensure that a path to ground is assured. However, the process fluid that has potential to build a static charge is on the inside of the piping, and therefore any charge buildup here must be dissipated. This is typically accomplished by inserting a grounding paddle (exotic metal such as hastelloy or tantalum) between flange connections. The handle of the paddle is then connected via a braided cable to the grounded pipe shell such that bleedoff of any internally generated charges can occur. Some European manufacturers offer carbon-filled PTFE-lined piping systems in which the liner resistivity is such that electrical charge dissipation can occur through the liner to the grounded steel shell. Ultimately, the design of the exterior/interior grounding system is the responsibility of the end-user.

Corrosion Allowance

Metals generally corrode due to electrochemical reactions, which gradually return the metal from a higher energy level (alloy) to a lower energy level (element or ore). In most cases this ongoing process can only be slowed by specifying a metal wall thickness that will deliver a predictable length of useful service life.

Plastics on the other hand, do not corrode. Instead, they are susceptible to attack from solvation, where the media reacts with the plastic, causing swelling or cracking, and failure. A plastic is either completely resistant to a chemical at a given temperature, or it will react with a chemical at, or above, a certain temperature. This process is usually rapid but can be avoided by following lined-pipe manufacturer's guidelines for their various liner material's resistance to different chemicals. When these guidelines are followed, and the system is installed and maintained in accordance with the manufacturer's guidelines, a plastic-lined piping system will provide a long, reliable service life.

Field Hydrotest

Test the integrity of the installation per the applicable section of ASME B31 Piping Code, using a hydrostatic test. Sometimes it is more practical to *hydrotest* in sections, using spectacle blind flanges to block off portions of the piping. If a flange leak occurs during hydrotest, and that flange has been properly torqued, do not tighten further. Instead, the bolts on the opposite side of the leak should be loosened one-half turn, and the bolts on the leaking side should be tightened one-half turn.

If the leak continues, remove the bolts and inspect the flare faces for indications of damage. Do not remove the bolts if the system temperature is more than 30°F (17°C) above ambient temperature, or flare distortion may occur. Slight scratches or dents that do not exceed 20 percent of the liner thickness can be repaired by hand with sandpaper or emery cloth. Repeat the torquing process to 80 percent of final torque. If necessary, the bolts can be tightened to the maximum torque published in the manufacturer's literature. Exceeding this torque, however, may cause permanent damage to the plastic flare faces. Because of the nature of plastic-lined piping, it should not be assumed that the first hydrotest will always be successful. Installers and users should be prepared for the possible additional time and expense of retorquing that may be necessary for a successful hydrotest.

Maintenance Considerations

Maintenance requirements vary by application. A system that sees mostly ambient temperature may require little maintenance, such as a periodic spot check of bolt torques. A system that undergoes frequent thermal cycles may require a preventive maintenance program that entails a higher frequency of spot checks.

Field Fabrication of Lined Pipe

Field fabrication of pipe spools allows end users and authorized lined-pipe distributors to fabricate lined-pipe spools locally, a factor which expedites turnaround times when compared to factory-made finished pipe spools. Straight pieces of lined pipe without flanges are stored at the end user's or distributor's shop until a requirement for a pipe spool arises.

Using special field-fabrication tooling supplied by the manufacturer, the end user or distributor can fabricate custom-length flanged pipe spools. The tooling and procedures are not interchangeable for use on products from different manufacturers. Flange options for field-fabricated pipe spools vary by manufacturer. Consult manufacturers for field fabrication instructions.

FLANGE REDUCTION TECHNIQUES

Flanged connections have long been recognized as a potential leak source, and new technologies now allow for their significant reductions. This has been brought about in part by the realization that flanged connections are a significant contributor to fugitive emissions, which are regulated by the 1990 Clean Air Act amendments. Among these is a new butt-fusion—welded flangeless connection of the plastic liner,[22] extra long lengths of pipe spools up to 40 ft (12 m), and single and multiple bent pipe spools.[23,24] See Fig. B12.9.

A new and patented flangeless joining technique was formally introduced in 1995, which can virtually eliminate over 90 percent of the flange connections of a plastic-lined piping system. As a base, it utilizes the well known technology of butt-fusion-welding that is widely used by the solid-plastic pipe industry. In order to provide overall mechanical continuity, a low-profile steel mechanical coupling is

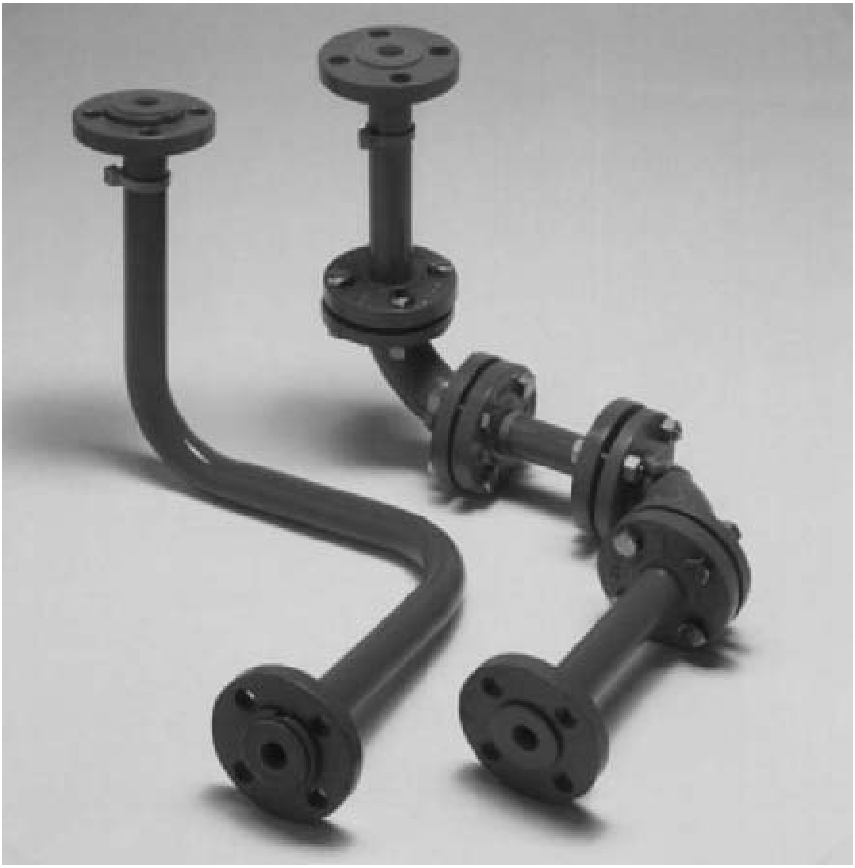

FIGURE B12.9 Illustration showing the flange-reduction possibilities of precision-bent plastic-lined pipe as compared with traditional flanged piping (*Courtesy of Crane Resistoflex*).

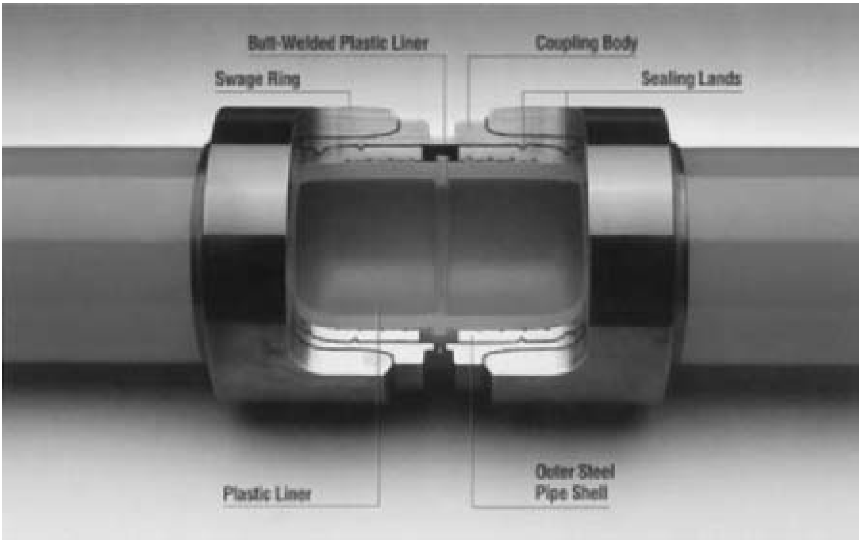

FIGURE B12.10 Sectioned view of a butt-fusion-welded polypropylene plastic liner connected with a mechanical coupling. (*Courtesy of Crane Resistoflex*)

engaged over the butt-fusion weld. See Fig B12.10. Other couplings and devices are available, but the user should determine which meet the code requirements of the applicable section of ASME B31, Pressure Piping Code.

The process is accomplished by butt-fusion welding two adjacent plastic-liner stub ends together to form a strong, leak-free joint. A special low-profile mechanical coupling is then installed over the welded connection to add structural integrity that is equivalent to a welded system. Coupling installation is accomplished with a hydraulic tool designed to seat the two swage rings positioned over the coupling sleeve. This technology allows the user to eliminate almost all flange connections for carbon-steel piping lined with polypropylene, polyvinylidene fluoride, perfluoroalkoxy and PTFE. A PFA- and PTFE-lined stainless steel option is available. Fittings are a low-profile construction with longer centerline to face dimensions so that the mechanical coupling can be slipped over the butt-fusion-welded joint prior to locking the coupling into place. Although the purchase price of the flangeless system may be initially more expensive, the user should look at the total life-cycle cost before making a final piping selection.[25]

The standard spool length for the plastic-lined pipe industry is 20 ft (6 m). Customers that now wish to further reduce the number of flange connections can also purchase 40 ft-(12m) long spools in NPS 1.5 (DN 40) through NPS 6 (DN 150) pipe sizes. These spools are an excellent complement when the flangeless system is being installed.

Lined pipe manufacturers also offer bent-lined-piping systems that can eliminate 50 to 70 percent of flange connections in a 20 ft-(6m) piping run with straight sections and elbows. Bends are done on a 3D pipe diameter bend radius to prevent collapse of the plastic liner. Available sizes are NPS 1 to 4 (DN 25 to 100) in both carbon-steel and stainless-steel pipe housings. Bent-pipe systems conform to the same ASTM F1545 testing requirements as conventional lined pipe. Although bent-

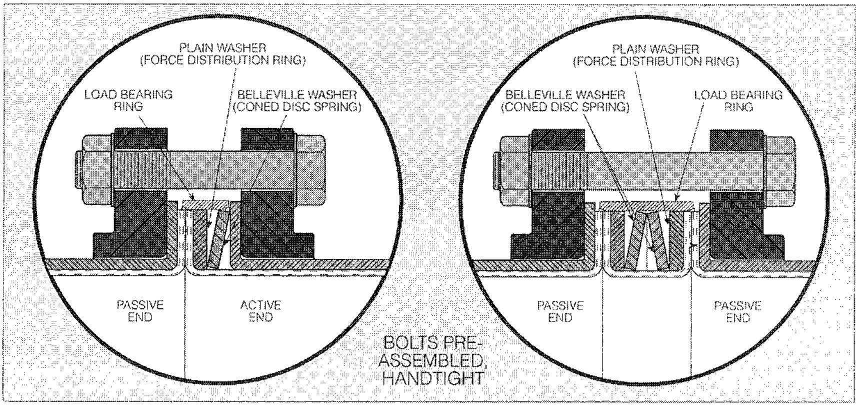
PLAIN WASHER
(FORCE DISTRIBUTION RING)
LOAD BEARING RING
BELLEVILLE WASHER
(CONED DISC SPRING)
PASSIVE END
ACTIVE END
BOLTS PRE-ASSEMBLED, HANDTIGHT
PLAIN WASHER
(FORCE DISTRIBUTION RING)
BELLEVILLE WASHER
(CONED DISC SPRING)
LOAD BEARING RING
PASSIVE END
PASSIVE END

FIGURE B12.11 High integrity flange connection. (*Courtesy of Crane Resistoflex*)

pipe spools offer many obvious advantages, they require special manufacturing techniques and are generally made at the factory. Replacement spools are seldom stored on site and do require extra lead time for delivery. Consequently, it is a good idea to have a stock of replacement fittings nearby if an emergency replacement is required. Bent pipe can either be flanged or flangeless.

Modified Flange Connections

Where flange connections are necessary, there is a modified leakless flange connection that utilizes a dual-sealing action. The dual-sealing action is achieved through the use of belleville washers located behind the plastic flare and secondary sealing rings, also known as *load bearing rings* See Fig B12.11. When the user tightens the flange bolts, the belleville washers deflect enough to impart the necessary sealing pressure on the PTFE flare faces. Due to the interaction of the load-bearing ring and the belleville washers, the sealing pressure is optimized and not exceeded, even though this system calls for almost quadruple the bolt torque values of a standard lined-pipe connection. The result is a leakproof flange connection that allows practically zero emissions and is Factory Mutual Approved.

APPLICABLE INDUSTRY STANDARDS

Requirements for the materials, workmanship, dimensions, design, fabrication, working pressures and temperatures, test methods, qualification requirements, and markings are set forth in ASTM F 1545. This is the specification for metal pipe and fittings lined with PTFE, PFA, FEP, ETFE, PVDF, PVDC, and PP. ASTM F 1545 is the consolidation of the following six separate (but related) specifications:

ASTM F 423 Standard Specification for Polytetrafluoroethylene (PTFE) Plastic-Lined Ferrous Metal Pipe, Fittings and Flanges

ASTM F 491 Standard Specification for Poly (Vinylidene Fluoride) (PVDF) Plastic-Lined Ferrous Metal Pipe and Fittings

ASTM F 492 Standard Specification for Propylene and Polypropylene (PP) Plastic-Lined Ferrous Metal Pipe and Fittings

ASTM F 546 Standard Specification for Perfluoro (Ethylene-Propylene) Copolymer (FEP) Plastic-Lined Ferrous Metal Pipe and Fittings

ASTM F 599 Standard Specification for Poly (Vinylidene Chloride) (PVDC) Plastic-Lined Ferrous Metal Pipe and Fittings

ASTM F 781 Standard Specification for Perfluoro (Alkoxyalkane) Copolymer (PFA) Plastic-Lined Ferrous Metal Pipe and Fittings

ASTM F 1545 lists requirements for materials of construction, qualification testing, and inspection requirements for plastic-lined piping as follows:

ASTM F1545 Requirements for Plastic-Lining Materials

Plastic-lining materials shall be made from a resin that conforms to the appropriate specifications as shown in Table B12.2.

ASTM F1545 Requirements for Lining-Material Mechanical Properties

For liner materials, the minimum tensile strength and minimum elongation at break when tested in accordance with the specifications shown in Table B12.2 shall conform to Table B12.6. Note that these are minimum requirements. Lined-piping manufacturers use various formulations of resins that may exceed the minimum values shown.

TABLE B12.6 Polymer Mechanical Properties

Lining material—resin type	Minimum tensile strength at break, psi (MPa)	Minimum elongation at break, %
Polypropylene (PP) Type I	4000 (27.6)*	10*
Polypropylene (PP) Type II	3000 (20.7)*	10*
Polypropylene (PP) 30% Glass Filled	2500 (17.3)*	2*
Poly (vinylidene chloride) (PVDC)	1500 (10.3)*	2*
Poly (vinylidene fluoride (PVDF)	4500 (31.0)	10
Poly (vinylidene fluoride) copolymer (PVDF)	4000 (27.6)	300
Polytetrafluoroethylene (PTFE)	3000 (20.7)	250
Perfluoro (ethylene-propylene) Copolymer (FEP)	3000 (20.7)	250
Perfluoro (alkoxyalkane) copolymer (PFA)	3800 (26.2)	300
Ethylyene tetrafluoroethylene copolymer (ETFE)	6500 (44.8)	275

* Minimum tensile strength and elongation at yield.

TABLE B12.7 Approved Ferrous-Metal Flange and Fitting Material Standards (ASTM)

Lining material	Pipe specifications	Flange specifications	Fitting specifications
PVDF, PTFE, FEP, ETFE, and PFA	A53 A106 A135 A312 A513 A587	A105 A181 A182 A216 A395 A536	A105 A181 A182 A216 A234 A351 A395 A403 A536 (60-40-18)
PP and PVDC	A53 A106 A135 A312 A513 A587	A105 A181 A182 A216 A395 A536	A48 A105 A126 A181 A182 A216 A234 A278 A351 A395 A403 A536

ASTM F1545 Requirements for Ferrous-Metal Pipes, Flanges, and Fittings Materials

The mechanical properties of the ferrous metal pipes, flanges, and fittings shall conform to the appropriate specifications listed in Table B12.7, except as they are influenced by accepted methods of processing in the industry (for example, Van Stone flaring, bending, swaging, welding, and threading).

ASTM F1545 Requirements for Inspection Testing

ASTM F1545 provides for a final proof test of finished components prior to shipping. Each pipe spool and fitting, prior to shipment, shall be either hydrostatically or electrostatically tested in accordance with the following:

Hydrostatic Test. The internal test pressure shall be 425 psig (2930 kPa) for Class 150 and Class 300 components. Reach full test pressure within one minute and hold for a total of three minutes. Observe the pressure gage throughout the test for evidence of leakage, which shall be cause for rejection.

Electrostatic Test. Conduct the test with a nondestructive high-voltage tester at a minimum output voltage of 10 kV. A visible or audible spark, or both, that occurs at the probe when electrical contact is made with the housing because of a defect in the liner shall be cause for rejection.

TABLE B12.8 Test Temperatures, °F (°C)

PTFE	PFA	FEP	ETFE	PVDF	PP	PVDC
500 ± 5 (260 ± 3)	500 ± 5 (260 ± 3)	300 ± 5 (149 ± 3)	300 ± 5 (149 ± 3)	275 ± 5 (135 ± 3)	225 ± 5 (107 ± 3)	175 ± 5 (79 ± 3)

ASTM F1545 Requirements for Qualification Testing

ASTM F1545 also requires each lined-pipe manufacturer to perform qualification testing on representative pipe and fittings in each liner material being offered for sale. This is not meant to be an inspection test for customer orders but a verification that the methods and materials used by each manufacturer will result in a product that is capable of satisfactory performance in conditions found in a chemical plant environment. The representative pieces must pass the hydrostatic or electrostatic test following each of the tests in order to be in compliance with the specification for specific test designs. Refer to ASTM F1545.

High and Low-Temperature Aging Test. This test is to determine the ability of the lined component's to withstand extended exposure to the liner material's maximum and minimum temperature. Test temperatures for the high-temperature test are shown in Table B12.8, and the low-test temperature is 0°F (−18°C).

Steam-Cold–Water Cycling Test. This test is to determine the lined components ability to withstand rapid, repeated, and extreme temperature cycling. A representative pipe spool is blind flanged and then filled with steam at the pressure listed in Table B12.9. When the temperature stabilizes, the steam is shut off, and the pipe spool is filled with ambient water until the outside metal temperature reaches 122°F (50°C). This procedure is repeated for 100 cycles. At the completion of the test, the liner shall exhibit no buckling or cracking.

Vacuum Testing. ASTM 1545 does not require that lined-pipe manufacturers offer vacuum-rated piping products, but if manufacturers make claims of vacuum-handling capability, they must perform vacuum testing per ASTM F1545.

The above qualification tests, again, are not production-inspection tests but are designed to establish baseline levels of quality and performance for products that are regularly installed in the most demanding chemical services. Reputable plastic-lined piping manufacturers will provide certificates of compliance to ASTM F 1545 upon request.

TABLE B12.9 Steam Test Pressures, psig (kPa)

PTFE	PFA	FEP	ETFE	PVDF	PP	PVDC
125 ± 5 (862 ± 35)	125 ± 5 (862 ± 35)	50 ± 3 (345 ± 21)	50 ± 3 (345 ± 21)	30 ± 2 (207 ± 15)	4 ± 1 (28 ± 7)	* *

* The thermocycling test for PVDC-lined pipe and fittings should be run using water at 175 ± 5°F (79 + 3°C)

PROJECT SPECIFICATIONS

A piping specification is used by the process engineer to develop piping and instrumentation drawings by the designer to lay out the piping run and product-detailed drawings by the purchasing agent for procurement and by the field engineer to ensure proper installation.[26] Thus the specification must include: the maximum pressure and temperature ratings; a list of flow media; the complete description of pipe, fittings, valves-and other piping items; and installation details. To be certain that a complete specification is achieved, the following procedure has proven useful:

1. The process engineer specifies maximum operating pressure and temperature and the flow media. An *initial piping index* can be useful in supplying this information. At this point it is necessary to ascertain that all possible media are included, that the operating conditions (pressure, temperature, and vacuum) are not minimized or exaggerated, and that the size range is all inclusive and accurate.

2. Completely describe all pipe and components. Reference the applicable ASTM standards to which all material and tests must conform. Include the size range required. Note the limitations of individual components—e.g., does a valve, hose, expansion joint, or sight glass have a pressure or temperature rating lower than that of the specification?

3. To assist the designer in laying out the pipe and in preparing detailed drawings, provide information giving the maximum and minimum lengths available, the methods of making branch connections, and the connections to dissimilar piping materials. Include instructions regarding the use of reducing tees, instrument tees, gaskets, and spacers.

Most frequently, piping components fail because their design capabilities have been exceeded. Know what is required of the components you specify and do not expect more from them than what they have been designed for. Reliable manufacturers of plastic-lined piping will not recommend the use of their products for services and conditions not previously tested.

INSPECTION AND SERVICE LIFE ANALYSIS

Currently there is an increased interest and more activity focused on improving existing mechanical-integrity standards that will continue to improve the overall mechanical integrity of process piping in the process industry.[27] The objective here is to eliminate piping and equipment-related incidents caused by leaks and failures that result in unscheduled maintenance, downtime, and asset losses. This can be approached by analysis of existing piping systems, the historical-type failure modes, and the expected service life. A repeat pattern of failures or a prioritized listing can help the maintenance department implement a plan for reduction and elimination of reccurring patterns. A key to any good maintenance program is the proper documentation of when a piping system was installed and any maintenance replacements that may have occurred. This is particularly important in today's mobile employment environment, as the personnel that originally installed the piping may not be at the same location several years into the future.

Plastic-lined piping also does not lend itself to traditional methods of inspection common in metal or alloy systems. The difficulties lie with lined pipe itself, as there is no *corrosion rate* basis that can be applied, such as a steady loss of thickness, until failure occurs. Rather, the action of the corrosive, if it has any effect, will alter the structure of the plastic at varying rates. When such changes in properties occur, this can lead to the eventual mechanical failure of the plastic liner. The determinant of suitability then becomes the rate at which the property changes occur. Performance variability is due to the type of plastic used, grade, quality, manufacturing process, and the service condition.

The following procedures have been employed to minimize and identify piping problems:

1. Ultrasonic techniques have proven useful in locating liner collapse. Decreased flow or pressure drop may also preclude liner collapse due to vacuum or permeation.
2. Visual inspection is a time-tested method.
3. Excessive external corrosion or that around a vent port on fluoropolymer-lined piping may indicate a liner leak.
4. Destructive testing of spools taken from service of known length of time in a documented environment.
5. Excessive loading due to thermal stresses may result in flange leaks. Make sure that the piping has been properly supported. The Manufacturers Standardization Society (MSS) Standard Practice SP-69, Pipe Hangers and Supports-Selection and Application, provides good references for supports and hangers.
6. Excessive fluid loading such as water hammer or the thermal expansion of hydraulically full piping can cause liner failure. Other loads can be in the form of rapid decreases in temperature via the introduction of a liquified gas.
7. Infrared can be used in locating leaks if corrosion and or oxidation reactions are taking place. Inspection must be done at night, and the capabilities are dependent on the degree of access to the piping system.

For particularly aggressive chemical services, it may be advisable to install several test spools that can be removed at predetermined time intervals to ascertain the overall pipe condition. The user may elect to re-install them or perform destructive tests for determination of liner properties. Current practices vary from company to company and site to site. Issues of internal versus external inspection can depend on the severity of service. Generally the approach is to replace it when it fails.

Plastic-lined piping is a durable product, but it should be recognized that it does not last forever. Although, cases have been reported where service life has exceeded 25 years, 10 to 15 years is typical, particularly in aggressive services. However this range can be decreased with high-temperature operation or high numbers of thermal cycles.

AUXILIARY PRODUCTS

There is a variety of auxiliary lined products compatible with lined pipe and fittings. These products include PTFE-lined hose, PTFE expansion joints, lined valves, dip pipes and spargers, sight-flow indicators, and strainers. These items are offered by most lined-pipe manufacturers to supplement their standard lined-pipe offering. Other equipment such as lined pumps, vessels, valves, flowmeters, and other lined components are available from a wide variety of manufacturers, enabling the end user to design and install a complete corrosion-resistant plastic-lined system with no metal-wetted parts.

REFERENCES

1. Saran* lined swaged pipe was first installed and used by The Dow Chemical Company in their Midland, Mich., plant site in the early 1940s.
2. Polytetrafluoroethylene, S.V. Gangal, E.I. du Pont de Nemours & Co., Inc., reprinted from *Kirkothmer Encyclopedia of Chemical Technology,* 3rd ed. Vol. 11, 1–24.
3. Teflon* PTFE, *Properties Handbook,* DuPont Literature.
4. Teflon* Tefzel*, *Technical Information,* DuPont Literature.
5. Teflon PTFE, *Ram Extrusion Processing Guide,* DuPont Literature.
6. Resistoflex Company received the first commercial patent for plastic-lined pipe in 1962.
7. Personal Communication with D.A. Seiler, Elf Atochem North America.
8. D.A. Seiler, ''PVDF in the Chemical Process Industry,'' in *Modern Fluoropolymers* John Wiley & Sons, Ltd., (1997), 487–505.
9. N.L. Lindley and J.C. Floyd, ''Piping Systems: How Installation Cost Stack Up,'' *Chem Eng.,* 100(1) (January, 1993), 94–100.
10. J. F. Imbalzano, D. N. Washburn, P. M. Mehta, ''Basics of Permeation and Environmental Stress Cracking in Relation to Fluoropolymers,'' DuPont Fluoroproducts.
11. Nelson Hall, ''Using Fluoropolymers to Resist Permeation of Corrosives,'' DuPont Engineering.
12. W.L. Buxton and G.V. Henthorn, ''Get The Most Out Of Plastic-Lined Pipe,'' *Chem Eng.,* Engineering Practice (September 1994).
13. R.C. Costello, ''Pipeflow: A Pressure Drop Calculator'' *Chem. Eng.* (August, 1996), 125.
14. Ray T. Hardee, ''Estimating Pipeline Headloss,'' *Chemical Processing,* 1998 Fluid Flow Annual, 9–12.
15. ''Guidelines for Selection, Installation, Operation of Plastic-Lined Pipe and Fitting Systems,'' American Pipe Fittings Association Publication, Springfield, V.
16. German O. Castro, ''Selecting and Installing Plastic-Lined Pipe,'' *Chem. Eng.* (March 22,1982), 113–118.
17. G.V. Henthorn ''Sealing Tips for Plastic-Lined Pipe,'' *Chem. Eng,* Engineering Practice (September 1992).
18. J.H. Bickford, *An Introduction to the Design and Behavior of Bolted Joints,* 3rd ed. (Marcel Dekker, Inc., 1995), 238–233 ISBN 0-8247-9297-1.
19. Liang-Chuan Peng & Tsen-Loong Peng, *Chemical Processing,* May 1998, 63–69.
20. J.H. Mallinson, *Corrosion-Resistant Plastic Composites in Chemical Plant Design,* Marcel Dekker Inc., 1988 442–444, ISBN 0-8247-7687-9.
21. Dow Plastic-Lined Piping Products internal study.
22. John M. Kalnins, ''Field Fabrication and Installation of Flangeless Connections for Plastic-Lined Piping,'' Second International Symposium on the Mechanical Integrity of Process Piping, Proceedings, Materials Technology Institute Publication, 143–164, ISBN: 1-57698-001-4.

---

*Trademark of the Dow Chemical Company

23. D. Hairston, ‘‘Removing Joints From Plastic Lined Pipe,’’ *Chem. Eng.* (November 1995), 37–41.
24. M.F. Jeglic and N.L. Lindley ‘‘Reduce Flanged Connections in Plastic-Lined Pipe,’’ *Chemical Engineering Progress,* (March 1994), 30–33.
25. J.M. Kalnins and N.L. Lindley, ‘‘The Case For Flangeless Plastic-Lined Pipe,’’ *Chem. Eng.* (January 1997), 96–100.
26. R.E. Johnsen. ‘‘Specifying Plastic-Lined Pipe,’’ *Chem. Eng.,* (March 22, 1982), 119–125.
27. J.T. Reynolds ‘‘Petrochemical Industry Standards Activity Aimed at Improving the Mechanical Integrity of Process Piping,’’ Second International Symposium on the Mechanical Integrity of Process Piping, Proceedings, Materials Technology Institute Publication, 331-358 ISBN: 1-57698-001-4.

BIBLIOGRAPHY

Schweitzer Philip A., *Corrosion and Corrosion Protection Handbook,* 2d ed. (Marcel Dekker, Inc). ISBN: 0-8247-7998-3.

Schweitzer Philip A. Corrosion Resistance Tables, 4th ed., Parts A, B & C, (Marcel Dekker, Inc). ISBN: 0-8247-9591-1.

C.P. Dillon, Corrosion Control in the Chemical Process Industries, 2nd ed. Materials Technology Institute Publication No. 45. ISBN: 1-877914-58-4.

CHAPTER B13

DOUBLE CONTAINMENT PIPING SYSTEM DESIGN

Christopher G. Ziu, P.E., C.I.P.E.
Author
Handbook of Double Containment Piping Systems
McGraw-Hill, Inc., Publishers
New York, New York
878 Pages, Copyright © 1995
ISBN 0-07-073012-1

Manager Piping Products
Orion Fittings, Inc.
Kansas City, KS

INTRODUCTION

History of Double Containment Piping

Up until the 1970s, dual arrangements of piping systems utilizing a carrier pipe with a secondary piping providing containment for purposes of environmental protection or safety were limited to highly specialized applications. These involved rare applications in the nuclear, gas, or chemical processing industry, where highly toxic or lethal chemicals or fluids were transported. The use of an outer jacket to maintain a positive seal around a primary carrier piping system and protect the primary piping was rarely encountered.

In the 1970s, several large U.S. electronics manufacturers began placing their underground, and in some cases aboveground, hazardous chemical piping systems piping within an outer jacket for the sole purpose of preventing leakages from getting into the ground water supply. Part of the reason for doing so was due to inadequate performance on the part of ordinary single-walled piping components intended to handle these chemicals. Leakages from joints, failures of piping materials due to poor manufacture or installation practices, inappropriate material selection, and soil corrosion were some of the contributing factors. Thus began the modern day practice of placing underground piping systems within a secondary containment piping system for the sole purpose of protecting the local environment.

Unfortunately, many of these early systems met with complications that resulted in less-than-successful performance. The first attempts at dual arrangements met with frequent failure. This was primarily due to systems being designed with combinations of piping components whose geometries were not readily compatible. Also, there were technical issues that arose that had not been addressed in the design. This had to do with structural concerns (supporting and centering the inner system), differential thermal expansion issues, penetration sealing issues, and many others. Additionally, many of these systems were installed with poor fabrication techniques, resulting in installations that lacked inherent stability and were thus readily subject to premature failure. The lack of design consideration and installation deficiencies resulted in failures that manifested themselves in predictable ways. These included the separation of split outer pipe and split outer fittings, coupled with failed inner welds, thereby leading to a double failure. Other means of failure included premature failure of inner and outer pipes due to fatigue, excess strain, and many other reasons.

In certain individual states of the United States of America, such as California, there was a movement toward implementing secondary containment piping systems in gasoline and petroleum stations. The first known application of this was a service station in Torrance, Calif., in 1981, under the watchful eye of local fire officials and other environmental officials. Soon thereafter, other gasoline stations throughout California were implementing double containment piping systems with integral leak detection.

During this same time frame, the federal government of the United States was studying ways to protect against the failure of underground storage tanks and piping transportation systems. This resulted in revisions to the Resource Conservation and Recovery Act (RCRA) of 1976, which were enacted in 1984. Signed into law as the Hazardous and Solid Waste Amendments of 1984 (U.S. Public Law 98-616, signed Nov. 8, 1984), it extended and strengthened the Solid Waste Disposal Act, as originally amended by the Resource Conservation and Recovery Act of 1976. The amendments contained strict requirements and provisions for underground storage tank and piping systems.

For systems containing a hazardous waste [hazardous according to the EPA as defined in the Code of Federal Regulations (CFR), Title 40, part 241], hazardous substance [also according to §40CFR261], or petroleum-based substance with 10 percent or more of its volume underground (including piping), the regulations contained strict provisions. For hazardous waste the regulations [according to §40CFR264] required secondary containment and leak detection for all underground systems. They also required the same for aboveground systems unless they were visually inspected for leaks on a daily basis. For hazardous substance the regulations [according to §40CFR280] similarly required all undergound systems and aboveground systems not visually inspected on a daily basis to have secondary containment and leak detection as well.

For petroleum substances, the regulations [according to §40CFR280] gave the user a choice of providing secondary containment with leak detection or to use corrosion-resistant materials with frequent monitoring and tightness testing (petroleum-based products only). An alternative for petroleum piping applications involved the use of ordinary carbon steel (e.g., A-53 or A-106, Grade B) with some form of coating and cathodic protection added. In the case of the so-called hazardous chemicals, aboveground systems were regulated as well, unless the systems were to be inspected on a daily basis. The regulations applied to both new systems and existing systems. Existing systems were subjected to a retrofit requirement according to a time table, with the oldest systems being required to be replaced first. Thus, all existing systems in the United States installed prior to December 1988 were scheduled to be replaced within a 10-year time frame from the commencement of the regulations, by December 1998, if they were not already in compliance. It is important to note that there are many aspects to the U.S. regulations (e.g., minimum volume requirements, regulated substances, leak detection requirements and options, etc.), and that the requirements and degree of enforcement vary according to each individual state. Other countries beyond the United States are currently considering the development of similar regulations and are expected eventually to adopt them by the early twenty-first century.

The 1984 amendments passed in the United States provide a framework by which individual states, territories, and possessions of the United States are mandated to draft state legislation, with their laws being at least as stringent as the U.S. federal law. Enforcement is required at the individual state level, with the federal Environmental Protection Agency overseeing each state program. Prior to the federal laws being adopted in the United States, some of the individual states where ground water contamination has been a particularly bad problem have adopted similar laws, prior to the federal government requiring them to do so (e.g., California, New York, parts of Texas, and others). In certain parts of Europe and Canada, local, officials have in some cases required double containment piping for hazardous chemical systems on a limited basis.

Overview of Double Containment Piping Systems

To provide secondary containment for piping systems, there are design considerations to be considered that are beyond those that apply to tanks. Whether the system is a pressure transfer pipe or a drain, waste, and vent system will have a significant impact on the design, layout, material selection, wall thicknesses, leak detection method chosen, and other aspects to be considered. Additionally, a system may be a relatively straight piping run, it may consist primarily of fittings, or it may have parts that are both straight in sections and fitting intensive in others. Further, whether a system is intended for burial or whether it is intended for aboveground use also have a significant impact on its design. Space limitations are an important consideration as well. A piping system that is intended for tight pipe-rack work, or is to be located near other buried structures, will have different installation requirements and different requirements for material selection, wall thicknesses, pressure ratings, et cetera, in comparison to a system that does not have space constraints.

In terms of material selections for the inner and outer pipes, there are a number of factors that have an effect on what should be selected. For primary piping components, the chief consideration in making its material selection has to do with the ability of the material to withstand the corrosive effects of the inner fluid. The same basic techniques and criteria used for selecting materials for single-walled piping systems must be used for primary piping in a double containment system. However, the interaction of the inner and outer systems, how they are tied together; the preferred joining method, and how joining affects system installation; the compatibility between the secondary system and its joining method, and how joining affects system installation; the compatibility between the secondary system and its joining methods all factor into the considerations for selecting the combination of materials to be used.

For secondary containment piping components, the considerations for choosing the material to be used must include risk analysis. The risk analysis used must take into account the anticipated frequency and duration that it is reasonably expected that the outer material may be in contact with the contained fluid. It also involves weighing the possibility of failure against the sensitivity of the external environment and the relative extent of damage that a *double failure* might cause. Since there may be only infrequent (or no) contact with the corrosive fluid in a properly designed system, and the time of contact once an event occurs may be short in duration, a less expensive material may be an appropriate choice for some applications. However, for many applications the risk created by even the remotest chance of a double failure might be too great even to take a chance on using a less corrosion-resistant material.

Leak detection in a double containment piping system usually consists of some means of monitoring the status of the annular space that exists in the system. Detection methods that are used typically measure the presence of a fluid or some change in physical state. Other methods can be used (i.e., flow measurement), but the most effective means is to monitor the status of the system's annular space to detect for a change from a status quo.

The proper design of any piping system must include all the forms of analysis that are normally applied to single walled systems (e.g. stress analysis, structural analysis, burial analysis, etc). However, the design of double containment piping systems adds several new twists to the already complex nature of piping design. This includes such novel items as the fluid dynamic requirements for draining or flushing the annulus, or the added mechanical complexities that result from the interaction of the separate, interacting inner and outer piping systems.

When one considers the interaction of an inner and outer pipe system, and the resulting stresses and reactions thereof, the analysis often becomes complex. In fact, most piping design stress computer codes are not capable of accurately modeling this situation. Structural analysis of double containment piping systems is also inherently complex, as one has to deal first with the structural supporting requirements of the inner system and then also deal with the support (or burial) of the complex assembly, which tends to be a more rigid assembly than a comparable single-walled pipe. In underground situations, for instance, the structural design for a combined system is governed by the burial situation, yet the structural design of the inner piping is according to aboveground single-wall pipe standards. In fact, the inner pipe can often be thought of as a single-walled pipe that is supported within a circular pipe rack.

The most important individual principle to consider when designing double containment piping systems is that the basic principles of piping design remain unchanged. The systems must first be designed according to the ordinary rules, codes, and considerations of single-pipe design. Then all the complexities of one pipe system interacting within another must be considered as well.

There are a vast number of material and system configurations to consider on any given project. However, this aspect of double containment piping may be viewed in a positive way. The vast number of choices presents a designer with an opportunity to provide a solution for every application. A suitable design can be achieved in every case. The final choice of material and system configuration usually is determined by price and code criteria, and to a certain extent, by personal preference.

A complete double containment piping system is one that is engineered, designed, installed, started up, and operated successfully. To engineer a double containment piping system fully typically involves much more than simply procuring preengineered components. The term *preengineered* is a widely used marketing term that usually refers to products that are sold as prefabricated components, which are in some cases available in standard sizes and materials. This term is often misused, as a surprising number of preengineered systems available from even the largest sources have been conceptualized and sold with little to no engineering having been performed on the system components. However, double containment piping systems by their nature usually have at least some unique requirements, necessitating a custom design to some extent. Thus designers must use good judgement when procuring preengineered components as part of their system.

Any two combinations of materials can be effectively combined for a given double containment piping application. However, there are many aspects involved to make this possible. Materials must be properly selected for the given application. System components must be procured; it must be known early on in a project whether they are commercially available in the sizes and pressure ratings required. They must also be available in the time frame required by the project. A system must always be engineered with sufficient detail, giving consideration to all applicable factors. All regulations governed by the local jurisdiction and appropriate design code rules must be satisfied. Ultimately, whoever is to take responsibility for the design and operation of the facility must be satisfied that the design is a safe and workable solution.

Overview of Leak Detection Systems

While a double containment system can be designed without a leak detection or monitoring system, the effectiveness of a system is considerably lessened without it. There are many methods available to provide sensing of the annulus that exists between primary and secondary systems. These methods are divided into two basic categories: automatic sensing systems and nonautomatic sensing systems.

Continuous Sensing Systems. Continuous sensing systems normally involve a sensing mechanism and an automatic alarm device. The most sophisticated form of sensing consists of continuous-line leak detection. Continuous-line leak detection is a technology designed to give relatively precise locating abilities for the determination of the location of leaks. For piping systems, this is a very important feature, although it also adds significantly to the initial cost of a system. There are two types of technologies; conductive (resistance)-based systems and those that are based on the measurement of impedance, commonly referred to as TDR-based systems (TDR is a common abbreviation for time-domain reflectometry). Both technologies are effective, although there are subtle differences between the two.

Other forms of continuous sensing are based on some form of point probes. These include liquid level sensing, pressure sensing, moisture sensing, pH sensing, conductivity (resistivity sensing), vapor detection, ultrasonic sensing, movement sensing, and many others. The various forms of sensing may also be combined for added effectiveness. The advantage of point probe systems is in the ability to customize the system, but an inherent disadvantage is the lack of ability to locate a leak with precision.

Noncontinuous Sensing Systems. Noncontinuous leak-sensing systems consist of visual detection systems, manual detection, inventory monitoring (tanks), and soil and vapor monitoring. Soil and vapor monitoring may also be used on a continuous basis, although it is not very common to do so. Visual detection can be designed easily into aboveground systems, but for underground systems they must be placed in manholes or sumps. Two forms of underground visual monitoring are very inexpensive and can be facilitated readily by having the secondary system flow open at the end of the pipe system, or by designing low point sumps with risers to the ground surface. Manual detection is normally facilitated by installing drip legs with valves in aboveground systems and with either low point sumps with risers to the ground surface in underground systems, or by positioning drip legs with valves in manholes. Manual systems can be a very cost effective and efficient method of leak detection and usually are a good idea to have as a backup or redundant method when other methods are employed. Inventory monitoring is a practical method for tank systems, but for piping systems it becomes more costly and complex, as a material balance must be performed. Noncontinuous systems are for the most part nonspecific in terms of locating leaks, unless a system is designed with very frequent locations for visual or manual monitoring.

Applicable Design Codes

Double containment piping systems must be designed, fabricated, inspected, and tested to applicable codes and regulations. Since by far, the majority of double containment piping systems are for drainage applications, plumbing codes play a particularly important role in double containment piping. Many nonpressure drainage piping systems are governed by local and/or national plumbing codes. Examples of these are the UPC (Uniform Plumbing Code), which is written by IAPMO (International Association of Plumbing and Mechanical Officials) and endorsed by the PHCC (Plumbing-Heating-Cooling Contractors), and additionally the IPC (International Plumbing Code), which is written by BOCA and ICBO. The most important requirement that these plumbing codes cover pertains to the carrier pipe fittings. Typically they should be approved by the respective code, such as the UPC or the IPC, according to the authorities having local jurisdiction.

Other nonpressure systems are often considered by local authorities having jurisdiction as *process* systems, and may thus be out of the jurisdiction of local plumbing codes. In many of these systems, there are no design standards that may govern the design. Thus it is up to the individual designer to use good judgment and to be sure that they at the very least meet or exceed applicable environmental standards.

In the United States and Canada, process piping systems are subject to the rules of the ANSI/ASME B31.3 Process Piping Code, including double containment piping systems. The ANSI/ASME B31.3 Code is a subset of the ANSI/ASME B31 Pressure Piping Code, which is described in more detail in Section 1.5.6, Piping Design Codes. The ANSI/ASME B31.3 Code references various applicable product manufacturing standards, performance standards, and material specifications that are to be used as a part of a double containment piping system. The Code covers all the rules necessary to complete a double containment piping system. However, the ultimate responsibility of interpreting and applying the ANSI/ASME B31.3 Code, in order to arrive at a completed double containment piping system that is safe and reliable, rests with each individual owner or owner-appointed representative.

In order for the ASME/ANSI B31.3 Code to apply to a double containment pipe system, most piping has to operate at a pressure of greater than 15 psi (1 bar), or contain a vacuum. However, the Code may still apply to a system having a positive internal pressure less than 15 psi (1 bar) if the fluid being conveyed meets certain requirements in terms of flammability or toxicity, which would apply to many chemicals commonly used in a double containment piping system. The ASME/ANSI B31.3 Code does provide all the information a designer needs to know to design a double containment piping system. However, it is up to the individual designer to interpret the Code as to how it instructs one to do so. There are no specific references to a double containment piping system or secondary containment piping component in the Code. There are specific references to the testing and inspection of outer jacketing, however.

In Europe, the European Parliament has adopted the Pressure Equipment Directive (PED) which will affect process piping and will go into effect on Nov. 29, 1999. The PED requires that piping systems comply with ‘‘essential safety requirements’’ as a function of the fluid service. One possible outcome presently being studied by the European Parliament and the ASME is to have piping systems meet these essential safety requirements by having piping systems comply with the ASME B31.3 Process Piping Code. Not enough is known at the time of this writing to determine the feasibility of whether the PED will ultimately reference the B31.3 Code.

DOUBLE CONTAINMENT PIPING COMPONENTS

Straight Piping Sections

Figure B13.1 illustrates required dimensional information needed for a typical layout for straight piping sections for both nonmetallic and metallic piping material–based

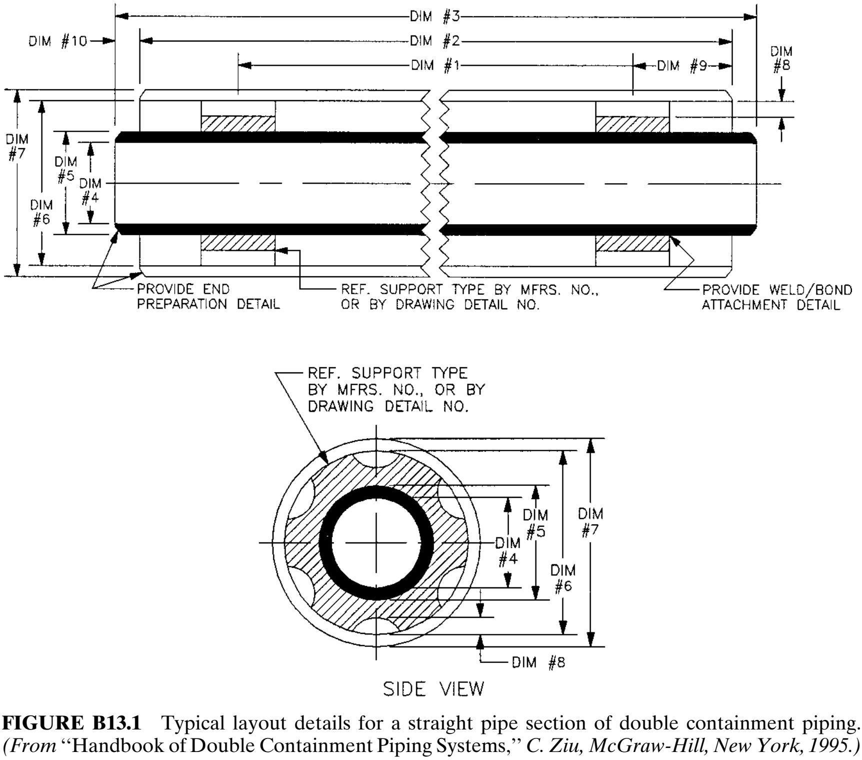
DIM #3
DIM #10
DIM #2
DIM #1
DIM #9
DIM #8
DIM #7
DIM #5
DIM #4
DIM #6
PROVIDE END PREPARATION DETAIL
REF. SUPPORT TYPE BY MFRS. NO., OR BY DRAWING DETAIL NO.
PROVIDE WELD/BOND ATTACHMENT DETAIL
REF. SUPPORT TYPE BY MFRS. NO., OR BY DRAWING DETAIL NO.
DIM #5
DIM #7
DIM #4
DIM #6
DIM #8
SIDE VIEW

FIGURE B13.1 Typical layout details for a straight pipe section of double containment piping. *(From* ‘‘Handbook of Double Containment Piping Systems,’’ *C. Ziu, McGraw-Hill, New York, 1995.)*

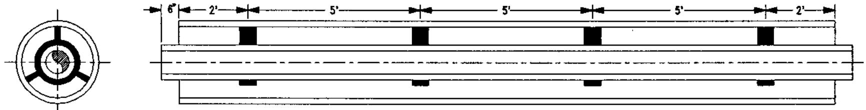

20 FOOT SPOOL WITH 4 INTERNAL SUPPORTS

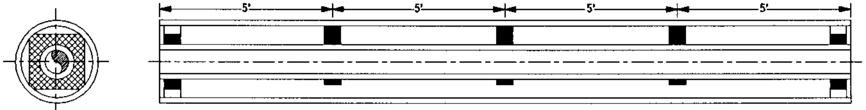

20 FOOT SPOOL WITH 2 END PLATES AND 3 INTERNAL SUPPORTS

FIGURE B13.2 Example of factory prefabricated 20-ft lengths of piping showing support spacing based on 5-ft spacing between supports for piping intended for staggered joining (top) and simultaneous joining (bottom). *(Orion Fittings, Inc., Kansas City, KS)*

systems, as may be used, for instance, in portions of double walled piping system on any project, each unique section of straight piping should have all details clearly indicated, except for highly fitting intensive projects where only short lengths of straight pipe exist.

Details that must be shown for a typical straight pipe section, or specified clearly, include: the materials of construction, with reference to the appropriate ASTM, DIN or AISI specifications; all inside and outside diameter sizes (including the annular space); wall thicknesses; applicable tolerances; location (spacing) and type of internal and external supports and leak detection cable (if applicable); and references to detail drawings of internal and external supports. A section of piping can be considered unique if any of these variables vary in any way. Both side and cross-sectional typical views should be shown. For intensive projects where separate spool drawings are to be prepared for each and every spool length of pipe, there is no need for typical straight pipe–section details on drawings. Figure B13.2, Fig. B13.3 and Fig. B13.4 show support-spacing options for various 20-ft, 10-ft and 5-ft sections of double containment piping.

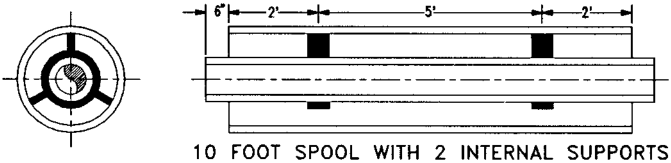

10 FOOT SPOOL WITH 2 INTERNAL SUPPORTS

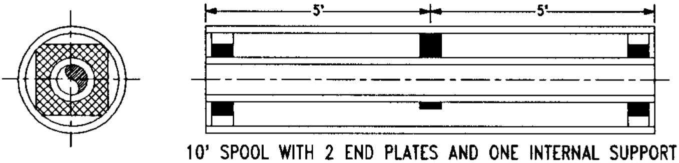

10' SPOOL WITH 2 END PLATES AND ONE INTERNAL SUPPORT

FIGURE B13.3 Example of factory prefabricated 10-ft lengths of piping showing support spacing based on 5-ft spacing between supports for piping intended for staggered joining (top) and simultaneous joining (bottom). *(Orion Fittings, Inc., Kansas City, KS)*

Termination and Initiation Component Design

There are several options for terminating a double containment zone, thereby making a transition from double containment piping to ordinary single-wall piping. The most simple option is to keep the annulus open ended where it is permissible. For most applications, end closures are required. Examples of some typical end closures are provided in Figs. B13.5 through B13.8.

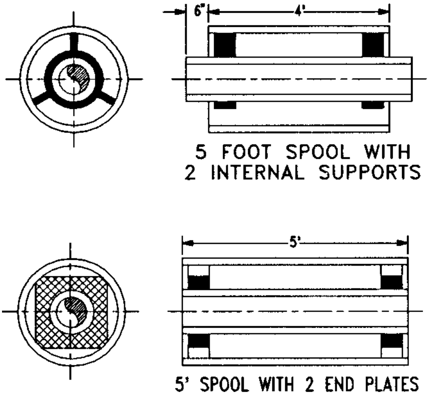
6"
4'
5 FOOT SPOOL WITH 2 INTERNAL SUPPORTS
5'
5' SPOOL WITH 2 END PLATES

FIGURE B13.4 Example of factory prefabricated 5-ft lengths of piping showing support spacing based on 5-ft spacing. *(Orion Fittings, Inc., Kansas City, KS)*

Closure Rings and Insert Rings. One of the more common termination arrangements for metallic systems that has been used extensively in jacketed pipe applications is the closure ring. Closure rings also find application as a termination device in double containment piping systems. Examples of closure rings are provided in Figs. B13.9 and B13.10. A closure ring is a concept similar to the internal anchor-baffle (see Fig. B13.12 and Fig. B13.13), except that an internal anchor-baffle is welded to the inner and outer pipes on both sides; a closure ring is welded only on one side to the secondary containment piping. A closure ring may be used on thermoplastic piping, as it is weldable, although the resulting secondary containment pressure rating (pressure capability of the annulus) may be substantially less than that of the primary piping. A variation of the closure ring is an insert ring (collar), which may be used in systems that use solvent cementing (PVC, CPVC, ABS) or adhesive bonding (all RTRP materials).

Anchoring Components and Methods for Primary Pipe

It is occasionally necessary to restrain a piping system at a given point by securely anchoring it at that point. This may be for such reasons as controlling vibration; controlling, directing, and limiting the amount of thermal expansion in a pipe; and

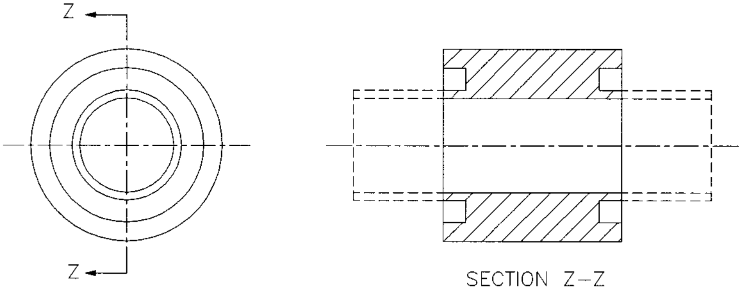

FIGURE B13.5a Illustration of a simple machined or molded block-style rigid termination fitting. *(U.S. Patent #4,930,544)*

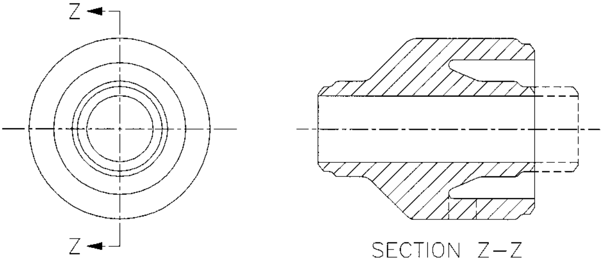

FIGURE B13.5b Illustration of a rigid termination fitting with contours, smooth radii, and external reinforcement to withstand concurrent axial loads due to thermal expansion, radial differential thermal expansion, vibration and dead weight testing. *(U.S. Patent #5,141,251, additional pages pending; Orion Fittings, Inc., from C. Ziu,* "Handbook of Double Containment Piping Systems," *McGraw-Hill, 1995.)*

other reasons. Since it is required in single-walled piping practice, anchoring is thus required for primary piping in double containment piping for the same reasons for its use in single-walled piping.

External-Anchoring Components and Methods. A primary pipe in a double containment system may either be anchored externally (external to the annulus) or internally (internal to the annulus). An external arrangement involves interruption

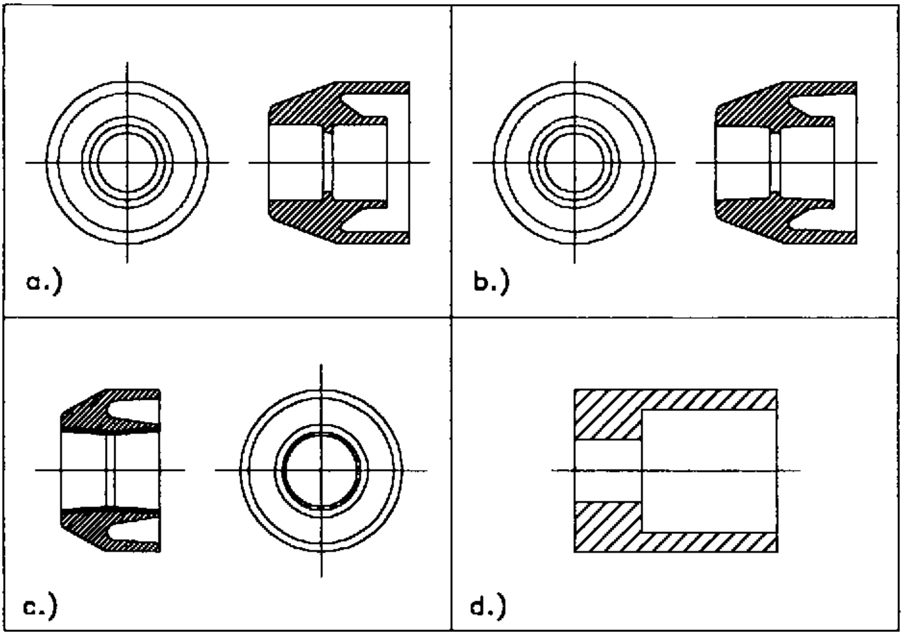

FIGURE B13.6 Examples of solid RTRP termination fittings: (a) straight socket "V" fitting; (b) tapered socket "V" fitting; (c) tapered socket "V" fitting with reinforced corrosion liner; U.S. Patent 5,141,261 applies to a–c; (d) straight socket termination fitting (source for d: Fibercast Co.) *(From "Handbook of Double Containment Piping Systems," C. Ziu, McGraw-Hill, New York, 1995.)*

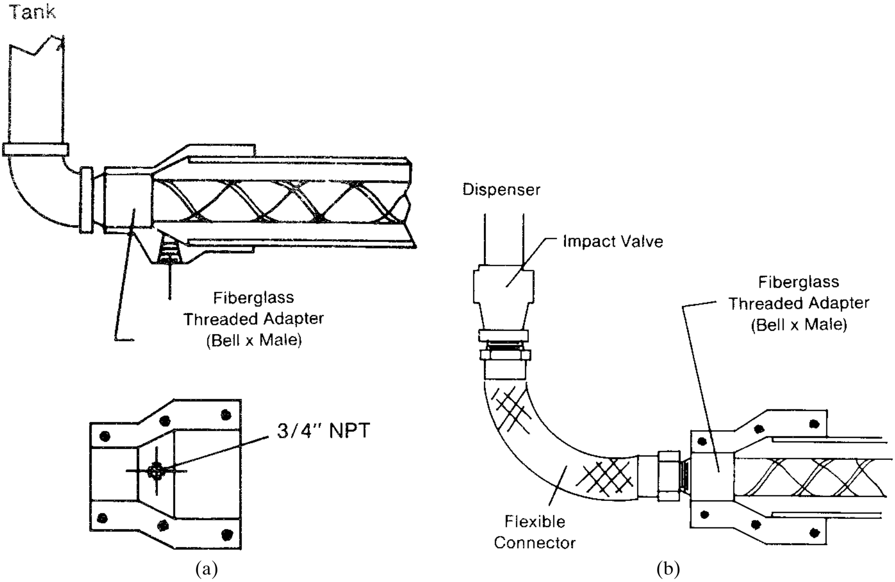
Tank
Fiberglass
Threaded Adapter
(Bell x Male)
3/4" NPT
(a)
Dispenser
Impact Valve
Fiberglass
Threaded Adapter
(Bell x Male)
Flexible
Connector
(b)

FIGURE B13.7 Examples of clam-shell fiberglass termination fittings: (a) termination concentric reducer with integral drain; (b) termination concentric reducer. *(Source: Smith Fiberglass Products, Inc.)*

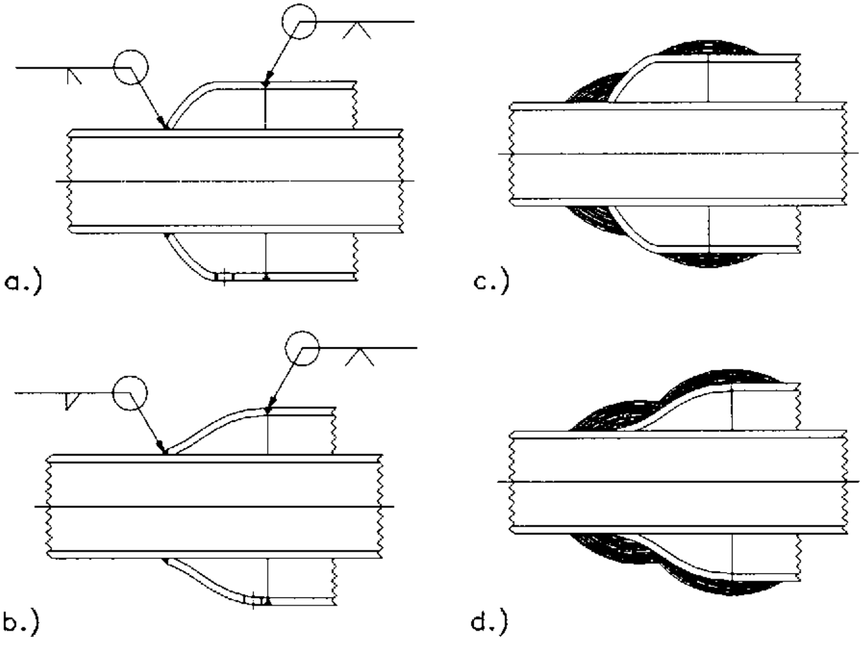

FIGURE B13.8 Examples of fabricated termination fittings: (a) modified cap; (b) modified concentric reducer; (c) RTRP cap with overwrap; (d) modified RTRP concentric reducer with overwrap.

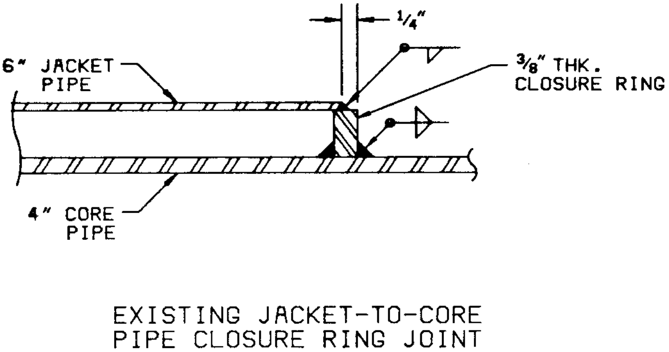
1/4"
6" JACKET PIPE
3/8" THK. CLOSURE RING
4" CORE PIPE
EXISTING JACKET-TO-CORE PIPE CLOSURE RING JOINT

FIGURE B13.9 Example of a termination closure ring for metallic systems. *(Source:* "Failure Assessment and Redesign of a Jacketed Piping System, a Practical Approach," *by W. E. Short II, Pressure Vessels and Piping Conference, 1988, ASME, PVP Vol. 139, #H00423.)*

of the secondary-containment feature, and is also referred to as a double termination arrangement. Since termination arrangements are a natural point of interconnection, the systems are restrained in place. Further, since they may be bolted together via a flange, the flanges may be secured to a building part, resulting in a completely rigid arrangement. The same effect can be achieved if an outer pipe is anchored at points away from the flange on both sides and sufficient intermediate guiding is provided.

The main drawback with this type of arrangement is that this area is no longer secondarily contained. Some other means of secondary containment must be added. If secondary containment is required to be provided, then possible solutions for aboveground systems include either a dike structure to be constructed around it, or a protective flange cover provided. An example of a protective flange cover for a double termination arrangement via flange is illustrated in Fig. B13.11. Another option in some aboveground applications is to leave the flange arrangement single contained and provide daily visual inspection at this point. In underground systems,

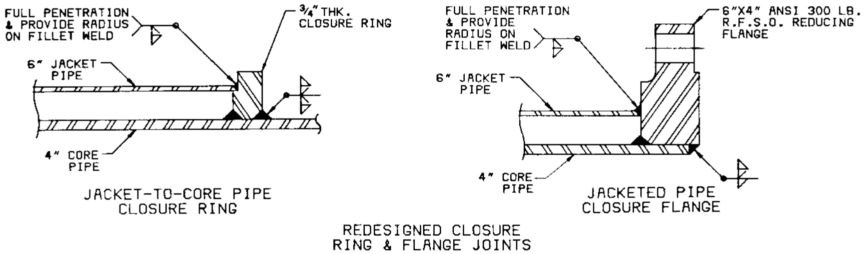
FULL PENETRATION & PROVIDE RADIUS ON FILLET WELD
3/4" THK. CLOSURE RING
6" JACKET PIPE
4" CORE PIPE
JACKET-TO-CORE PIPE CLOSURE RING
FULL PENETRATION & PROVIDE RADIUS ON FILLET WELD
6"X4" ANSI 300 LB. R.F.S.O. REDUCING FLANGE
6" JACKET PIPE
4" CORE PIPE
JACKETED PIPE CLOSURE FLANGE
REDESIGNED CLOSURE RING & FLANGE JOINTS

FIGURE B13.10 Example of a termination closure ring for metallic systems that has an insert style secondary containment pipe attachment, and that extends beyond the secondary containment. Note the counter bevel weld details for the primary pipe attachment, and the thicker ring portion together adds strength and resistance to cyclic loads of a differential thermal expansion nature. *(Source:* "Failure Assessment and Redesign of a Jacketed Piping System, a Practical Approach," *by W. E. Short II, Pressure Vessels and Piping Conference, 1988, ASME, PVP Vol. 139, #H00423.)*

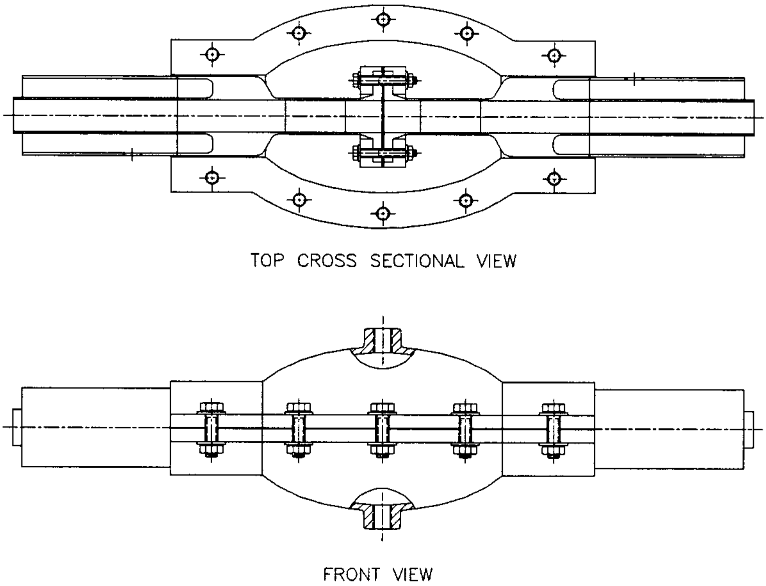
TOP CROSS SECTIONAL VIEW
FRONT VIEW

FIGURE B13.11 Illustration of a protective flange cover. *(U.S. Patent #5,141,256)*

the arrangement will require either placement within a concrete sump or manhole, or the provision of a protective flange cover.

Internal-Anchoring Components and Methods. There are options for anchoring the primary piping that eliminate the need to interrupt the containment casing. A variety of internal methods exist, some of which are fabricated, and others that involve specialized fittings.

A basic fabricated version, termed an *internal-baffle* arrangement, is illustrated in Fig. B13.12 and Fig. B13.13. This method is a variation of the termination closure

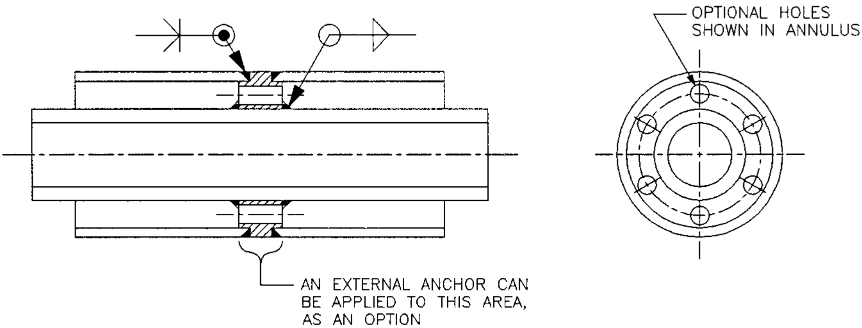
OPTIONAL HOLES SHOWN IN ANNULUS
AN EXTERNAL ANCHOR CAN BE APPLIED TO THIS AREA, AS AN OPTION

FIGURE B13.12 A basic internal baffle–style internal anchor, which is a structural attachment to the primary pipe. This type of device is limited to metallic pipes due to the limitations of welding or bonding nonmetallic materials to achieve adequate shear strength.

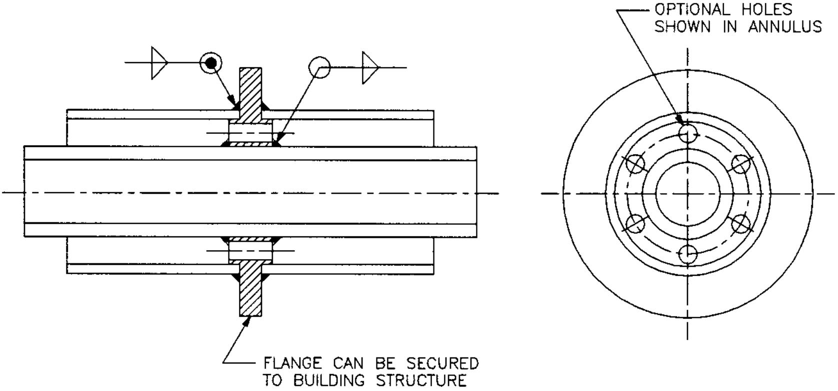
OPTIONAL HOLES SHOWN IN ANNULUS
FLANGE CAN BE SECURED TO BUILDING STRUCTURE

FIGURE B13.13 A variation of the internal-baffle concept shown in Figure B13.12, in which the baffle extends radially beyond the secondary containment pipe for the purpose of being welded or bolted to an external structural member.

ring described earlier. It is suitable in metallic systems where the metal can be directly welded to the baffle.

A variation of the internal-baffle for use in systems that use a metallic primary piping and a nonmetallic outer system is illustrated in Fig. B13.14. This type, like the version shown in Figure B13.13, may have the baffle extend radially in order to allow it to be directly attached or secured to an external structure. These arrangements are suitable in aboveground applications; in underground applications the

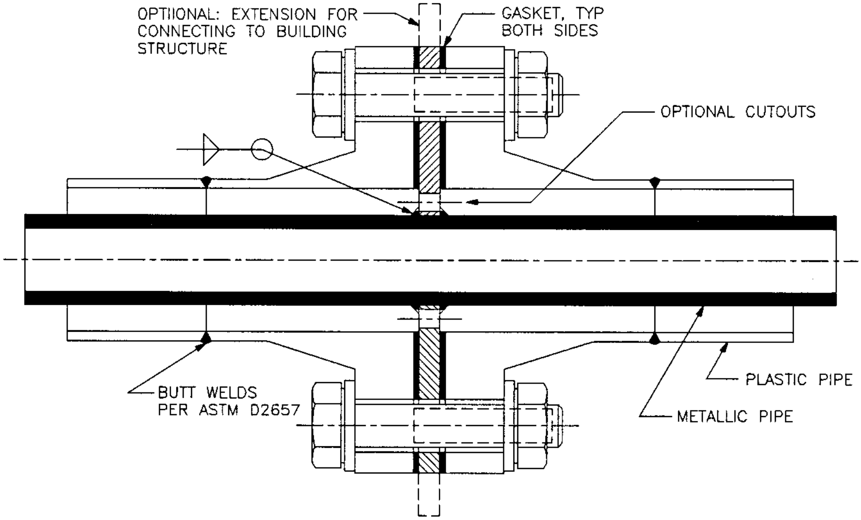
OPTIONAL: EXTENSION FOR CONNECTING TO BUILDING STRUCTURE
GASKET, TYP BOTH SIDES
OPTIONAL CUTOUTS
BUTT WELDS PER ASTM D2657
PLASTIC PIPE
METALLIC PIPE

FIGURE B13.14 Internal anchoring method for metallic primary, nonmetallic secondary containment piping arrangements.

flanges would have to be directly buried and may therefore require extra protection (i.e., coating and cathodic protection of the bolts, in addition to protective shrinkwrap covers, etc.).

A structural design of a homogeneous internal-anchor component (perhaps more appropriately termed an *internal termination anchoring fitting,* as it effectively terminates double containment at its point of use) is presented in Figs. B13.14 and B13.16. Figure B13.15 illustrates a solid annulus version, while Fig. B13.16 illustrates a version that is designed to allow annular flow (and maximize the flow through the component).

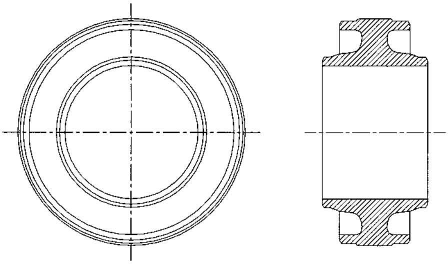

FIGURE B13.15 An example of a homogeneous internal anchor coupling having a solid annulus for compartmentalization purposes. *(U.S. Patents #5,141,261 and 4,930,544)*

Any homogeneous-material internal-anchoring component is generally considered to possess single containment in its center portions. Therefore, these components may require additional secondary containment around their exterior (i.e., a concrete sump, dike, etc.) to satisfy secondary containment requirements.

Figure B13.17 illustrates another type of patented internal-anchor fitting, designed to enable the primary piping to be anchored while minimizing stresses on the component itself, lessening the chance of failure as compared to the homogeneous versions, yet maintaining 100 percent secondary containment and also allowing any combination of materials.

The fitting shown in Fig. B13.17 allows for drainage of leaks through the annulus.

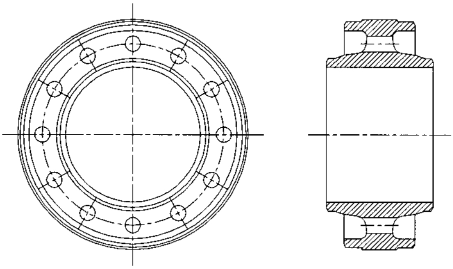

FIGURE B13.16 An example of a homogeneous internal-anchor coupling having annular cutouts for flow or to allow for leak detection cable in the section. *(U.S. Patents #5,141,261 and 4,930,544)*

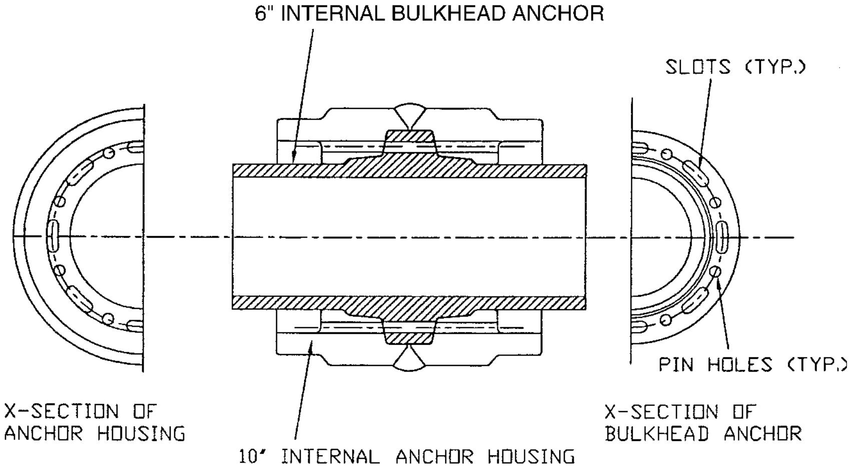
6" INTERNAL BULKHEAD ANCHOR
SLOTS (TYP.)
PIN HOLES (TYP.)
X-SECTION OF ANCHOR HOUSING
X-SECTION OF BULKHEAD ANCHOR
10' INTERNAL ANCHOR HOUSING

FIGURE B13.17 Example of a patented proprietary internal-anchor coupling for thermoplastic or other material, primary piping with a separate secondary-containment housing that can be constructed of the same or a dissimilar plastic material. Shown is a copolymer polypropylene primary bulkhead housed inside an HDPE outer housing. *(U.S. Patents #5,085,471 and #5,141,261)*

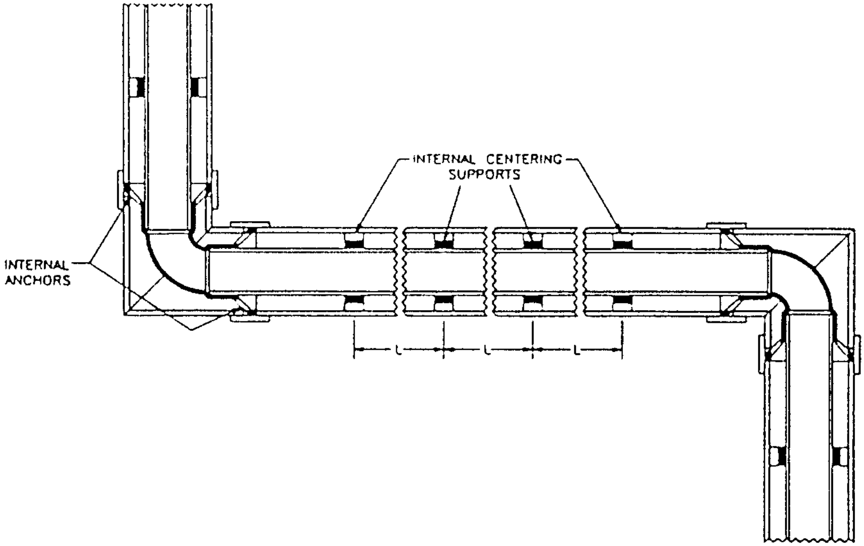
INTERNAL CENTERING SUPPORTS
INTERNAL ANCHORS
L
L
L

FIGURE B13.18 Illustration of a totally restrained section of double containment metallic piping that is restrained by means of internal-baffle style anchors welded on each side of the 90° elbows.

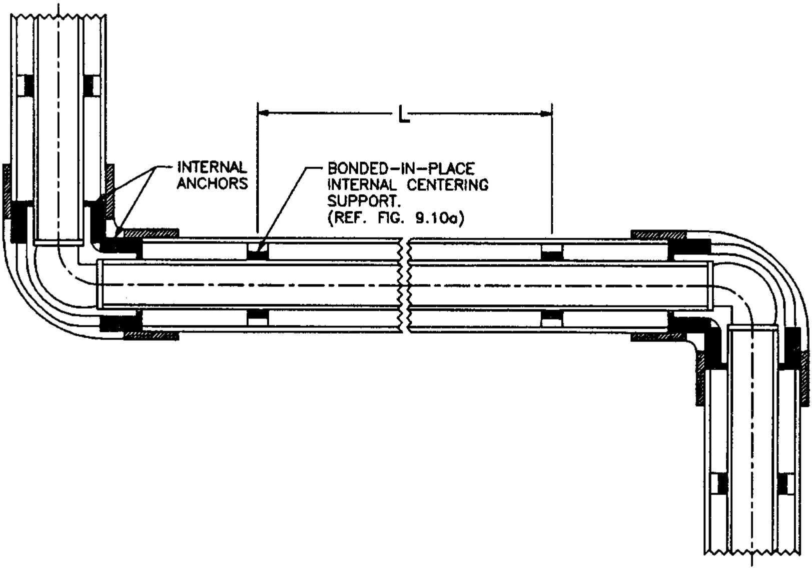
L
INTERNAL ANCHORS
BONDED-IN-PLACE INTERNAL CENTERING SUPPORT. (REF. FIG. 9.10a)

FIGURE B13.19 Illustration of a totally restrained section of RTRP double containment pipe, which is restrained by means of bonded in place collar-style internal anchors on each side of the 90° elbows. *(Source: Fibercast Co., U.S. Patent #4,886,305.)*

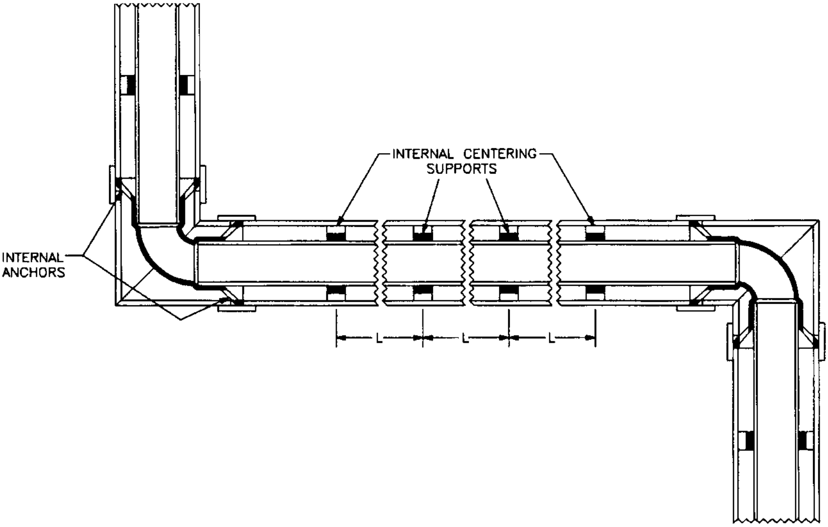
INTERNAL CENTERING SUPPORTS
INTERNAL ANCHORS
L
L
L

FIGURE B13.20 Illustration of a totally restrained section of thermoplastic double containment pipe, which is restrained by means of Rionlock™ conical-shaped internal anchors on each side of the 90° elbows. *(Orion Fittings, Inc.; Patent Pending)*

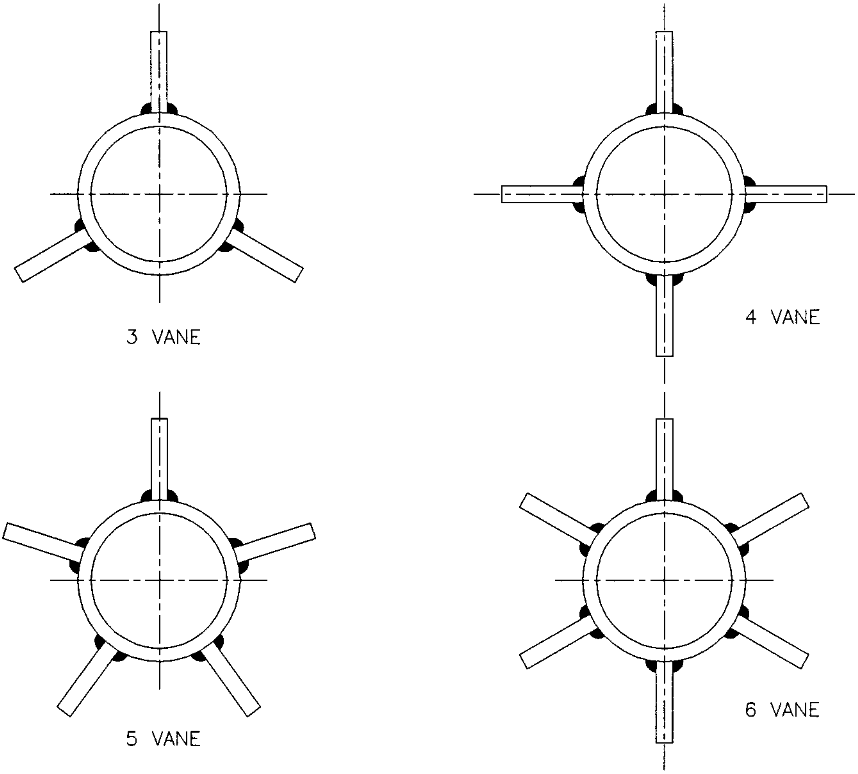

FIGURE B13.21 Illustration of three-, four-, five-, and six-vane fabricated vane-type interstitial supports, where the vanes or fins are welded directly to the primary pipe.

Alternatively, it may be provided with specialized *annular plugs* or seals to prevent flow. One would desire to prevent annular flow when designing a system in a compartmentalized fashion or when using these fittings as termination fittings.

Anchored Systems Using Anchored Fittings

One of the more common ways to anchor double containment piping systems is to anchor each and every fitting internally by the use of collar inserts or welded in place plate supports. This method has been used extensively for many years in jacketed process piping systems using metallic materials. However, the method has been popularized in recent years in double containment systems due to the highly successful commercial introduction of a patented system available from the Fibercast Co. (Sand Springs, Okla.) trademarked as the DualCast System. Examples of this type of system are shown for metallic systems and for the DualCast system in Figs. B13.18 and B13.19, respectively. An example of a patent pending system using conical internal anchors in thermoplastic socket-based drainage systems is shown in Fig. B13.20.

In this type of system it is important to anchor every outlet of every fitting. In other words, branch fittings require anchoring on all three sides and elbows on both sides. In doing so, the straight piping running between fittings are thereby anchored as well, although the straight pipes must still be adequately guided axially between consecutive fittings, except for very short runs.

Interstitial Supports

Various types of interstitial supports (also referred to as centralizers, among other names) are shown in Figs. B13.21 through B13.26.

Pressure Fittings

Examples of typical restrained and unrestrained pressure elbow and branch fittings are shown in Figs. B13.27 through B13.38.

Nonpressure (Drainage) Fittings

Various types of restrained and unrestrained nonpressure drain, waste, and vent fittings are shown in Figs. B13.39 through B13.58.

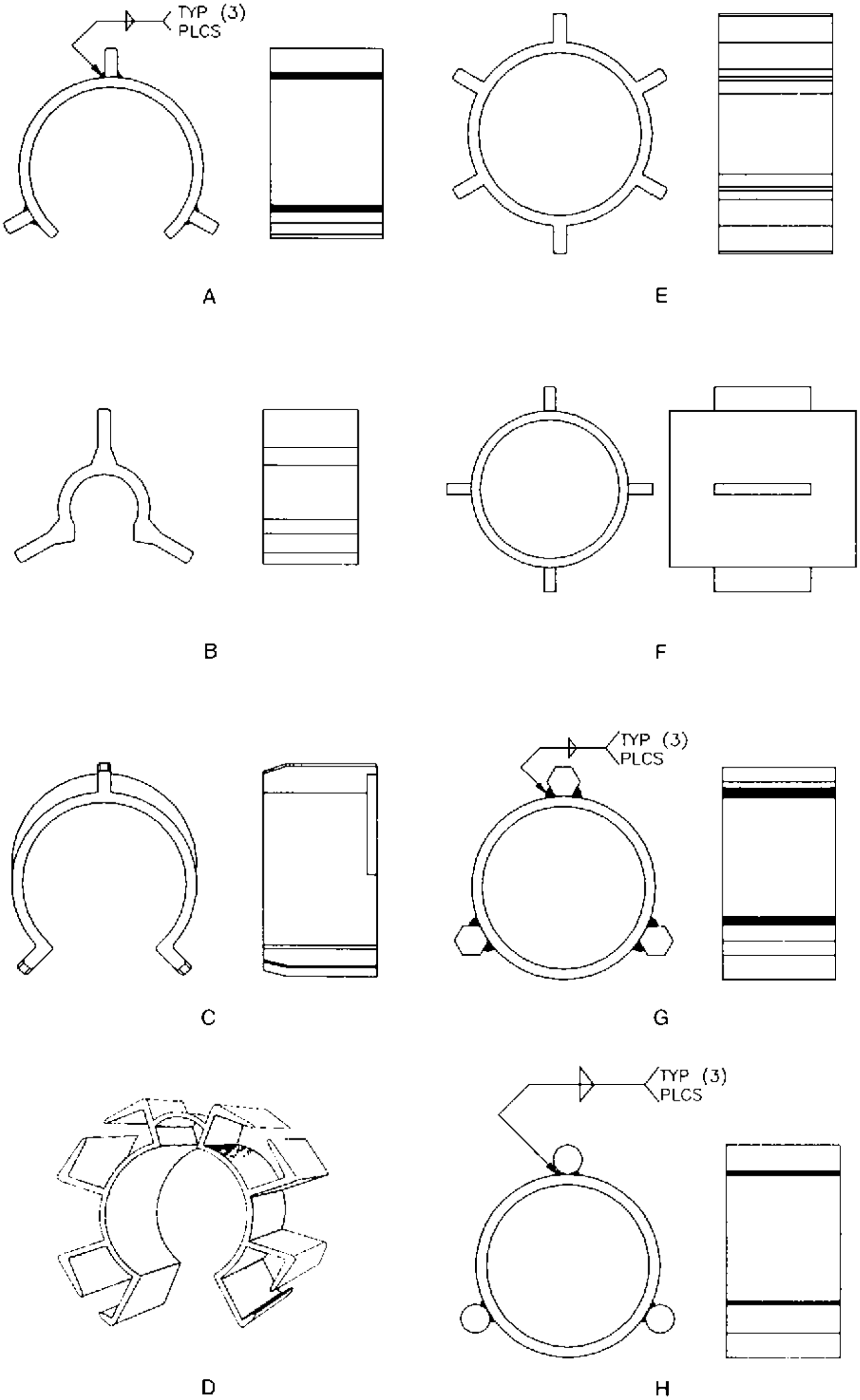

FIGURE B13.22 (left) Examples of miscellaneous vane-type supports: (a) fabricated vane-type clip-on support; (b) molded or cast-vane support with integrally reinforced vanes (Guardian div. of Eslon); (c) molded vane support with lateral reinforcement of vanes (U.S. Patent 5,018,260) AGRU, Asahi/America; (d) complex molded vane support with external pads (G. Fisher/R&G Sloane); (e) collar-style with vanes; (f) vane-type coupling; (g) welded hex-rod with 3-vanes; (h) welded round bar stock with 3-vanes.

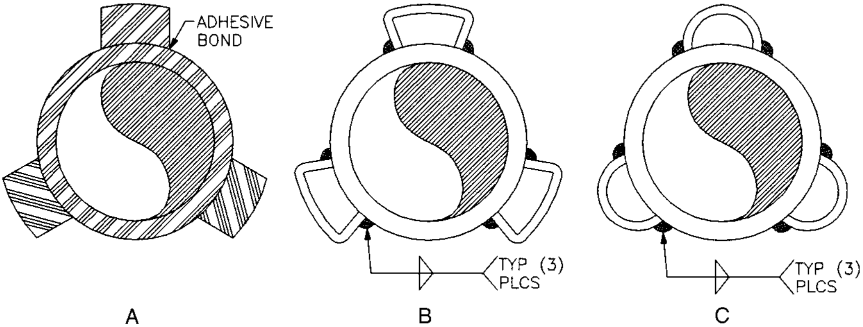

A B C

FIGURE B13.23 Examples of support pad-type internal supports: (a) illustration of a typical bonded three-pad support arrangement for a fiberglass primary pipe; (b) illustration of a metallic primary pipe having three pipe saddles welded to its surface; (c) use of welded half-pipe saddles on a primary pipe.

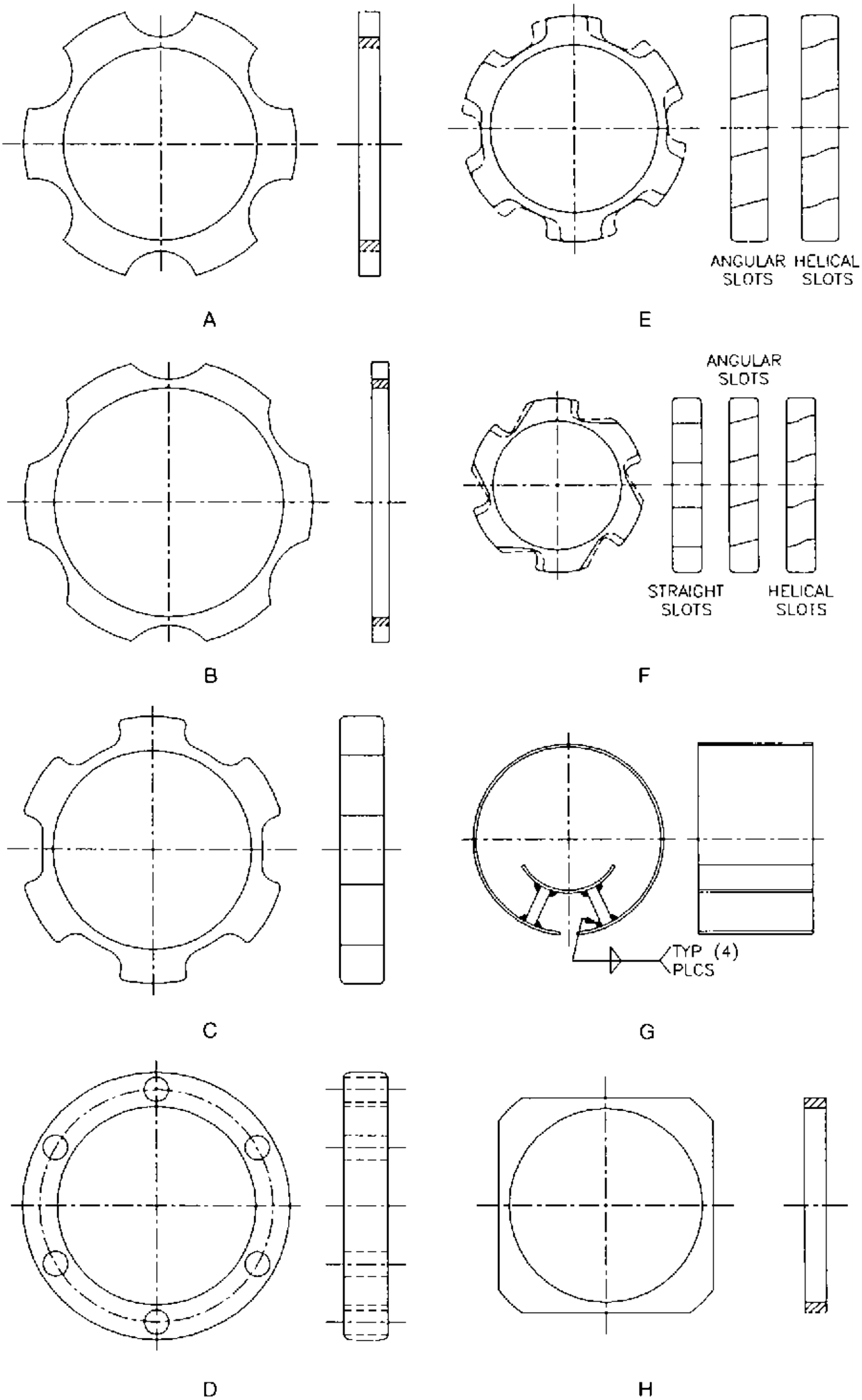
A
ANGULAR SLOTS
HELICAL SLOTS
E
B
ANGULAR SLOTS
STRAIGHT SLOTS
HELICAL SLOTS
F
C
TYP (4) PLCS
G
D
H

FIGURE B13.24 (left) Various examples of collar-style interstitial supports: (a) basic support with half-moon cutouts; (b) with extended open area; (c) with annular slots; (d) with drilled holes; (e) with angular slots or curved helical vanes; (f) for improved annular flushing and drying *(U.S. Patent #5,400,828 applies to (e) and (f));* (g) fabricated saddle-type; (h) square shape for fabricated thermoplastic systems intended for simultaneous fusion.

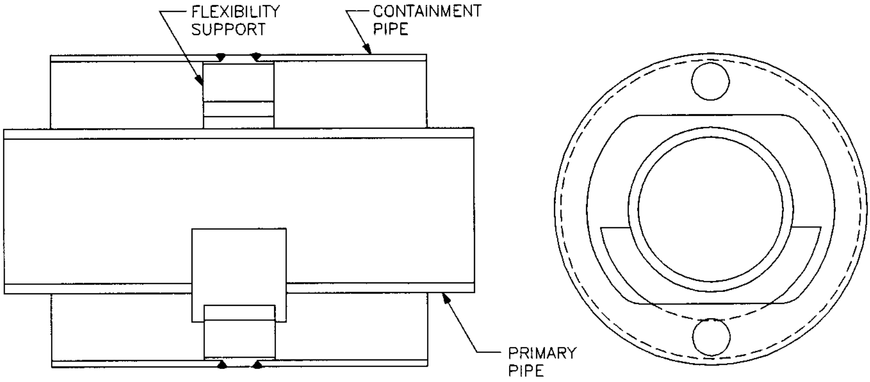
FLEXIBILITY SUPPORT
CONTAINMENT PIPE
PRIMARY PIPE

FIGURE B13.25a A basic flexibility support designed to be welded or bonded to the outer jacket. *(U.S. Patent Nos. 5,862,834 and 5,197,518; additional patents pending; Orion Fittings, Inc.)*

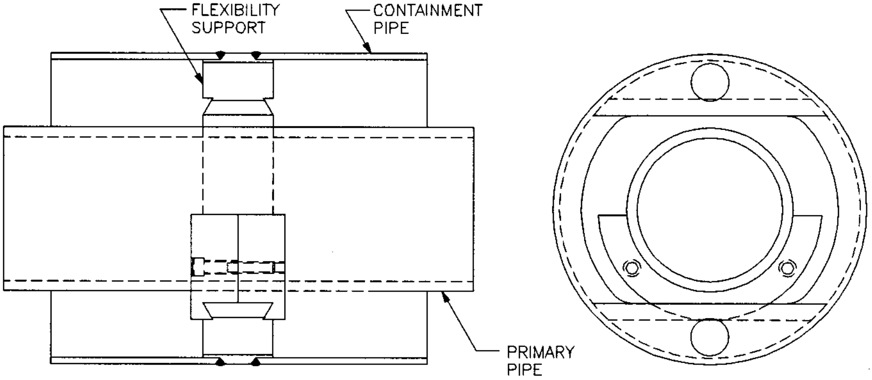
FLEXIBILITY SUPPORT
CONTAINMENT PIPE
PRIMARY PIPE

FIGURE B13.25b A flexibility support having a saddle that interlocks to the base via a dovetailed arrangement. *(U.S. Patent Nos. 5,862,834 and 5,197,518, additional patents pending; Orion Fittings, Inc.)*

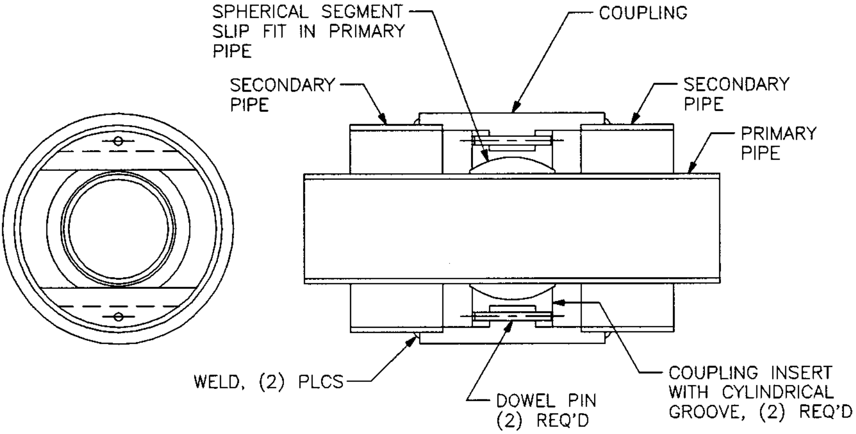
SPHERICAL SEGMENT SLIP FIT IN PRIMARY PIPE
COUPLING
SECONDARY PIPE
SECONDARY PIPE
PRIMARY PIPE
WELD, (2) PLCS
DOWEL PIN (2) REQ'D
COUPLING INSERT WITH CYLINDRICAL GROOVE, (2) REQ'D

FIGURE B13.26 Illustration of an internally guided ball-type flexibility support. The version shown is designed to use in an all-welded system. Variations are also available that are intended for use in systems with a mechanically joined outer jacket. *(U.S. Patent Nos. 5,901,753; 5,862,834 and 5,197,518; Orion Fittings, Inc.)*

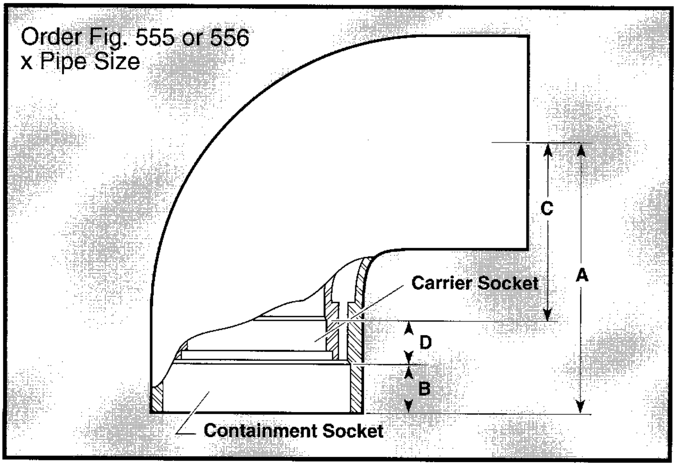
Order Fig. 555 or 556
x Pipe Size
C
A
Carrier Socket
D
B
Containment Socket

FIGURE B13.27 Restrained fiberglass 90° elbow *(U.S. Patent 4,886,305; Fibercast Co.)*

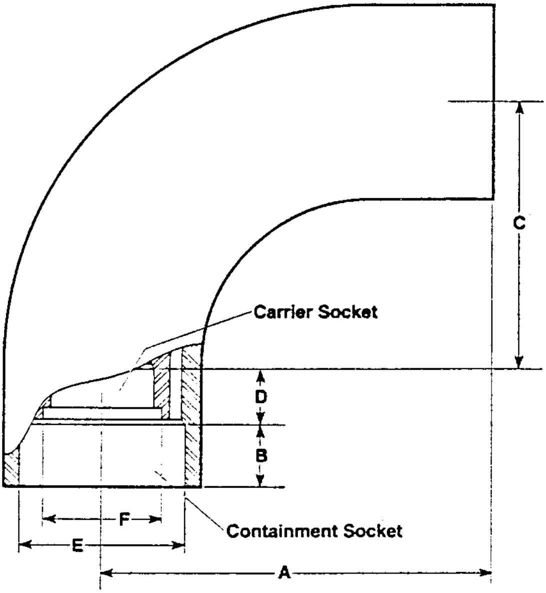

FIGURE B13.28 Restrained fiberglass long radius 90° elbow *(U.S. Patent 4,886,305; Fibercast Co.)*

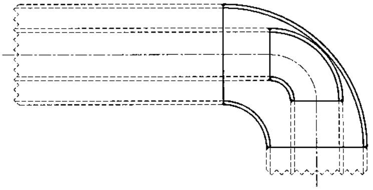

FIGURE B13.29 Example of a double-containment elbow arrangement whereby the primary elbow has a shorter radius than that of the corresponding secondary containment elbow.

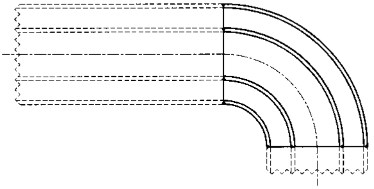

FIGURE B13.30 Example of an elbow where the inner and outer radii are equal throughout their curved portion.

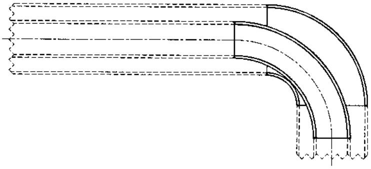

FIGURE B13.31 Example of an elbow whereby the inner elbow has a radius which is longer than that of the corresponding secondary containment elbow. *(U.S. Patent 5,452,922; Orion Fittings, Inc.)*

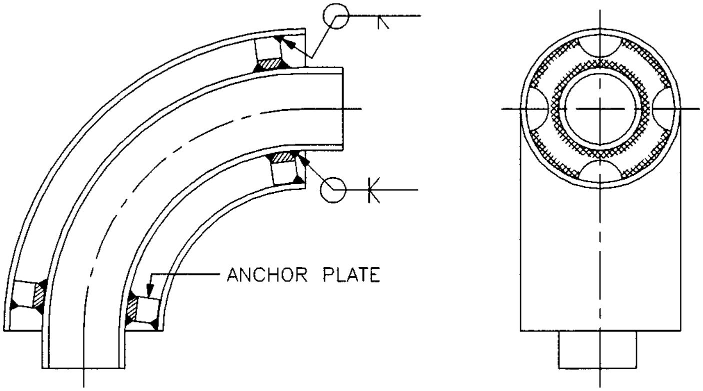
ANCHOR PLATE

FIGURE B13.32 Restrained metallic elbow.

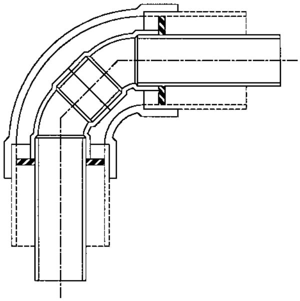
DUAL CONTAINMENT
90° ELBOW W/2 – 45° ELBOWS

FIGURE B13.33 Typical thermoplastic 90° elbow combination for parts using socket-type joining systems whereby the carrier elbow is made of two 45° elbows. *(Orion Fittings, Inc.)*

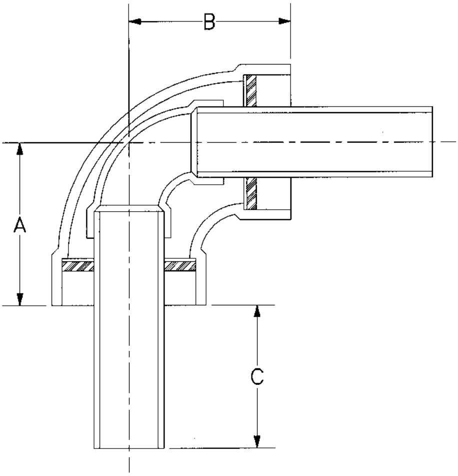

FIGURE B13.34 Typical thermoplastic 90° elbow combination for parts using socket-type joining systems whereby the carrier elbow is a single 90° elbow. *(Orion Fittings, Inc.)*

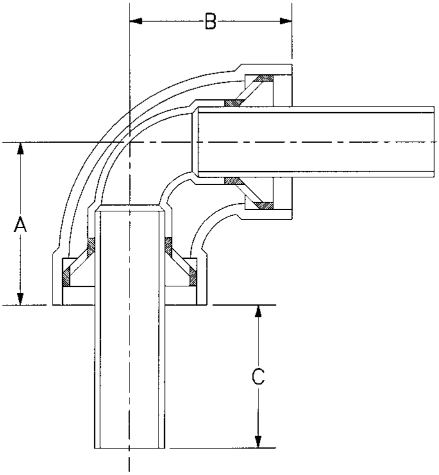

FIGURE B13.35 Restrained thermoplastic 90° elbow combination for parts using socket-type joining systems whereby the carrier elbow is a single 90° elbow. *(Patent Pending; Orion Fittings, Inc.)*

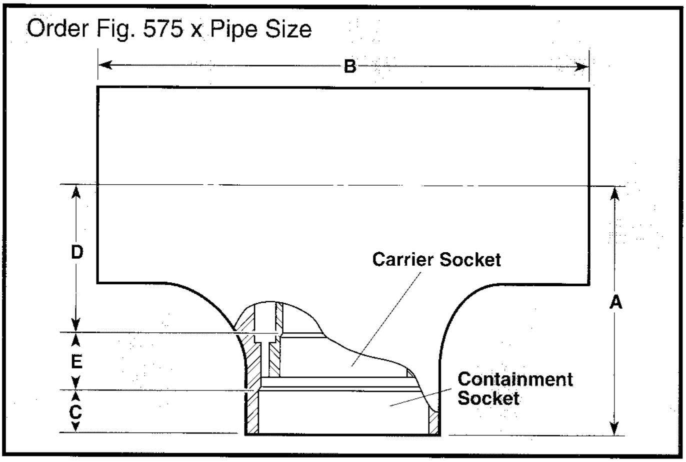
Order Fig. 575 x Pipe Size
B
D
E
C
A
Carrier Socket
Containment Socket

FIGURE B13.36 Restrained fiberglass Tee *(U.S. Patent 4,886,305; Fibercast Co.)*

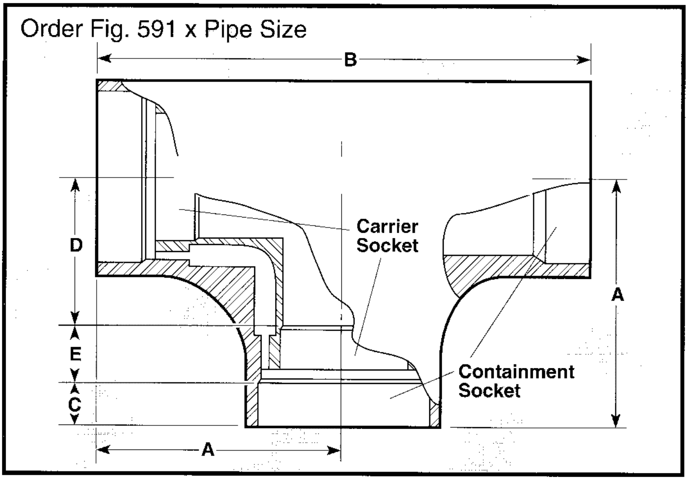
Order Fig. 591 x Pipe Size
B
D
E
C
A
A
Carrier Socket
Containment Socket

FIGURE B13.37 Restrained fiberglass 90° carrier elbow contained in a Tee. *(U.S. Patent 4,886,305; Fibercast Co.)*

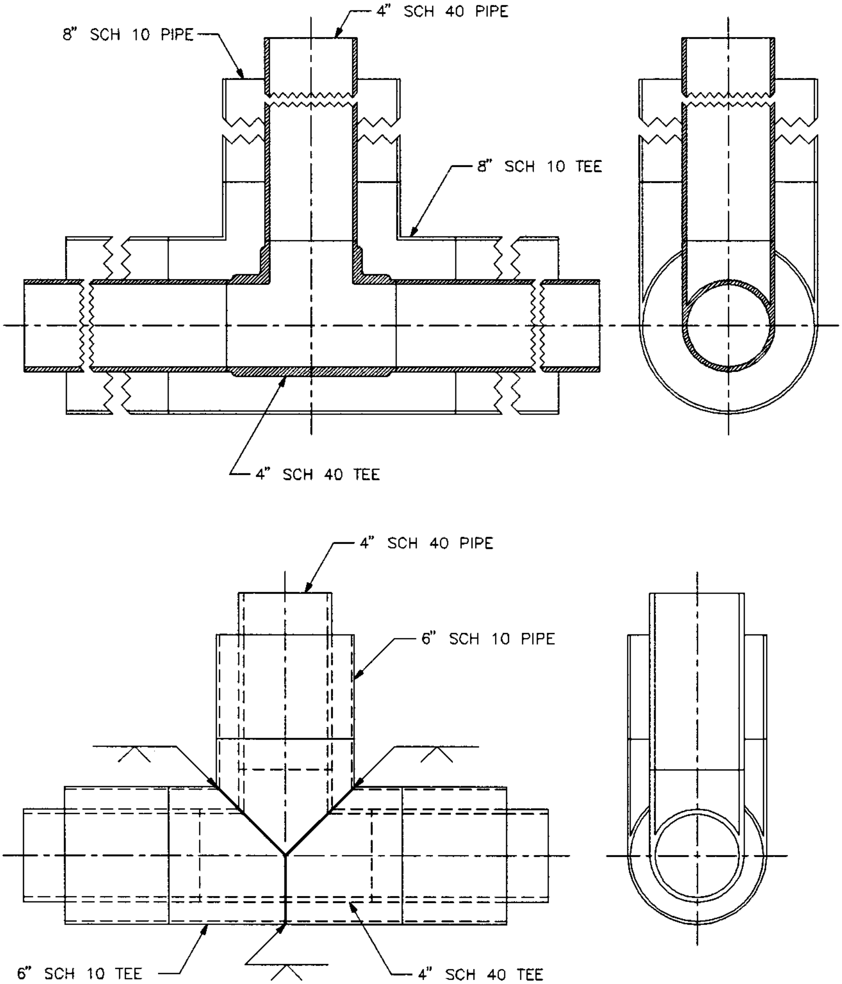
4" SCH 40 PIPE
8" SCH 10 PIPE
8" SCH 10 TEE
4" SCH 40 TEE
4" SCH 40 PIPE
6" SCH 10 PIPE
6" SCH 10 TEE
4" SCH 40 TEE

FIGURE B13.38 (Above) Typical tee in a split-and-reassembled outer tee; (Below) Typical tee in a completely fabricated outer tee. *(From* "Handbook of Double Containment Piping Systems," *C. Ziu, McGraw-Hill, New York, 1995.)*

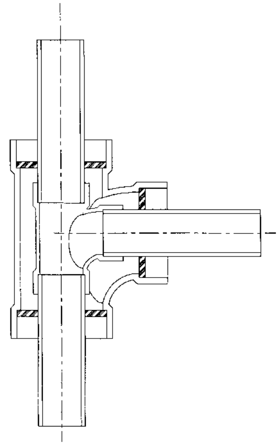

FIGURE B13.39 Example of thermoplastic sanitary tee using molded code approved carrier fitting. *(Orion Fittings, Inc.)*

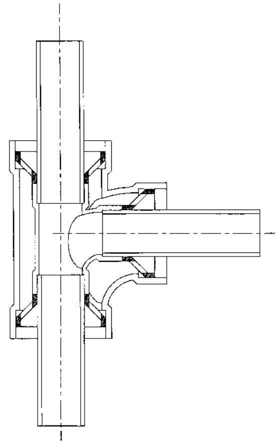

FIGURE B13.40 Rionlock™ restrained thermoplastic sanitary tee using molded code approved carrier fitting. *(Patent Pending; Orion Fittings, Inc.)*

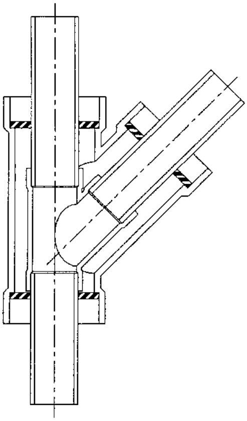

FIGURE B13.41 Example of thermoplastic 45° lateral (wye) using molded code approved carrier fitting. *(Orion Fittings, Inc.)*

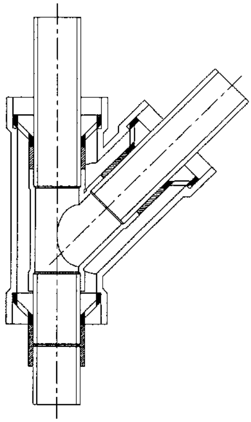

FIGURE B13.42 Rionlock™ thermoplastic restrained 45° lateral (wye) using molded code approved carrier fitting. *(Patent Pending; Orion Fittings, Inc.)*

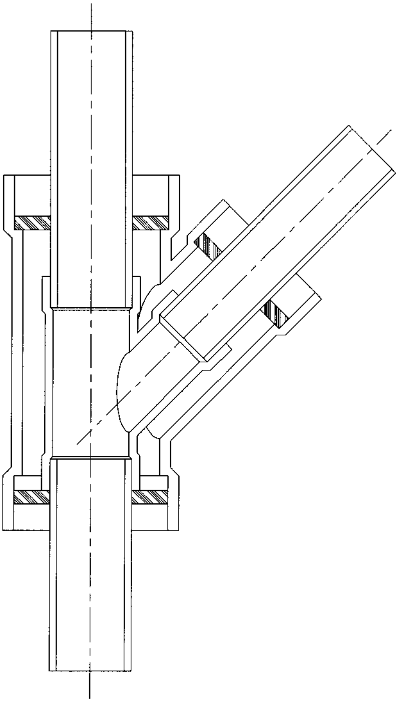

FIGURE B13.43 Example of thermoplastic 45° reducing lateral (wye) using molded code approved carrier fitting. *(Orion Fittings, Inc.)*

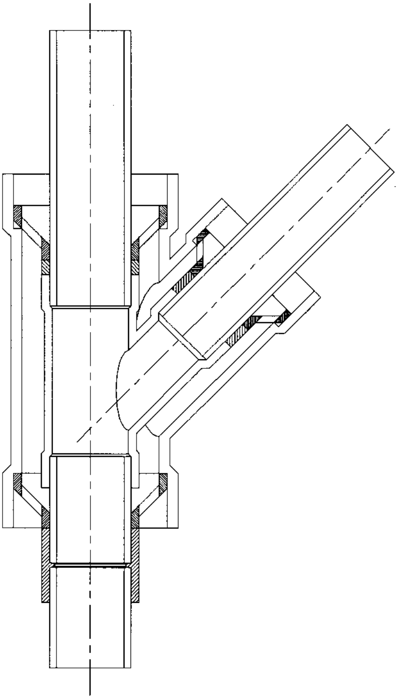

FIGURE B13.44 Rionlock™ thermoplastic restrained reducing 45° lateral (wye) using molded code approved carrier fitting. *(Patent Pending; Orion Fittings, Inc.)*

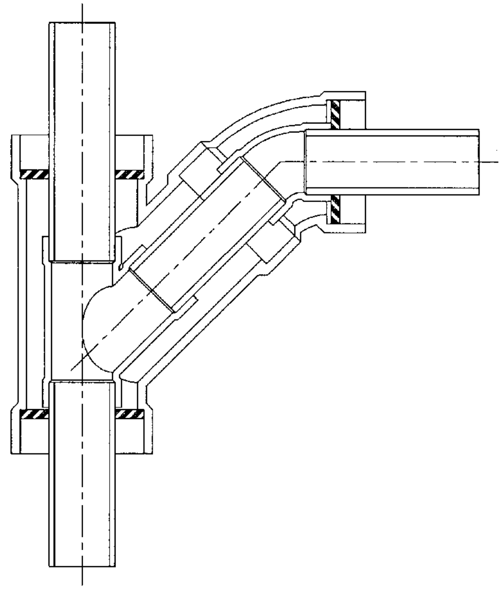

FIGURE B13.45 Example of thermoplastic long-turn wye using molded code approved carrier fitting. *(Orion Fittings, Inc.)*

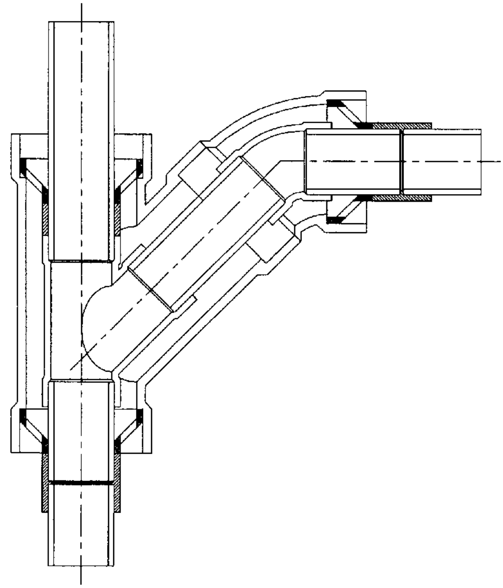

FIGURE B13.46 Rionlock™ thermoplastic restrained long-turn wye using molded code approved carrier fitting. *(Patent Pending; Orion Fittings, Inc.)*

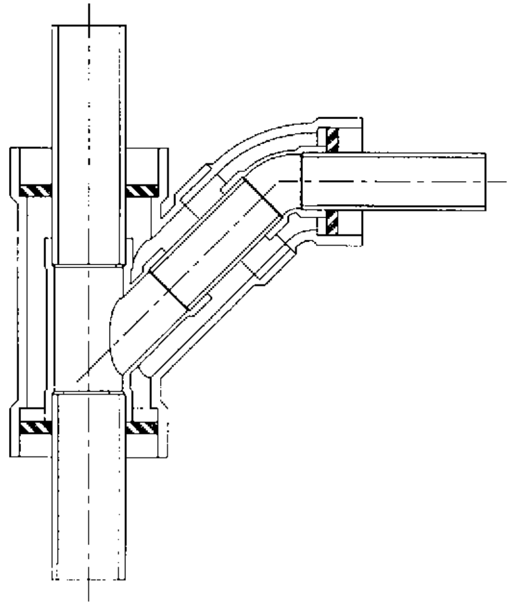

FIGURE B13.47 Example of thermoplastic reducing long-turn wye using molded code approved carrier fitting. *(Orion Fittings, Inc.)*

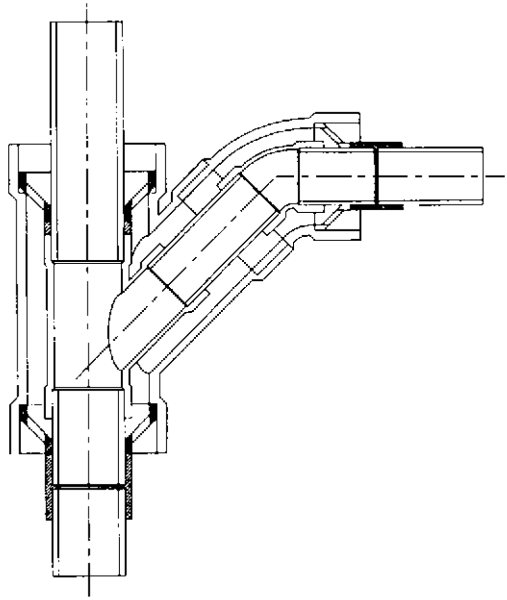

FIGURE B13.48 Rionlock™ thermoplastic restrained long-turn wye using molded code approved carrier fitting. *(Patent Pending; Orion Fittings, Inc.)*

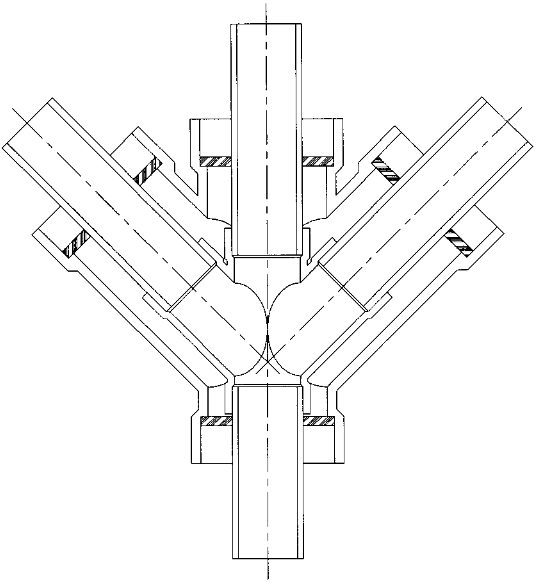

FIGURE B13.49 Example of thermoplastic 45° double lateral (wye) using molded code approved carrier fitting. *(Orion Fittings, Inc.)*

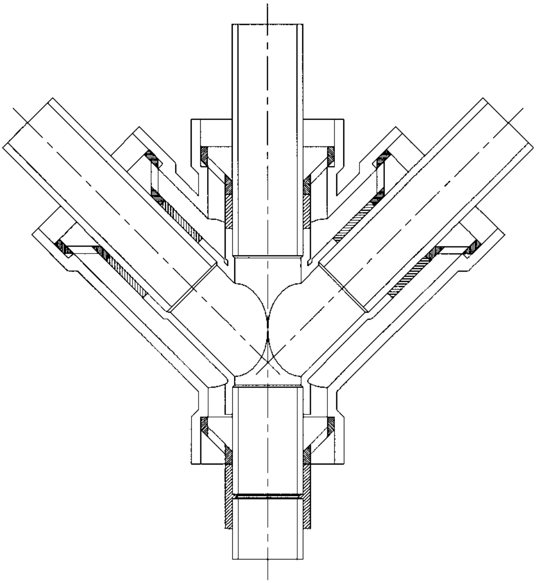

FIGURE B13.50 Rionlock™ thermoplastic restrained 45° double lateral (wye) using molded code approved carrier fitting. *(Patent Pending; Orion Fittings, Inc.)*

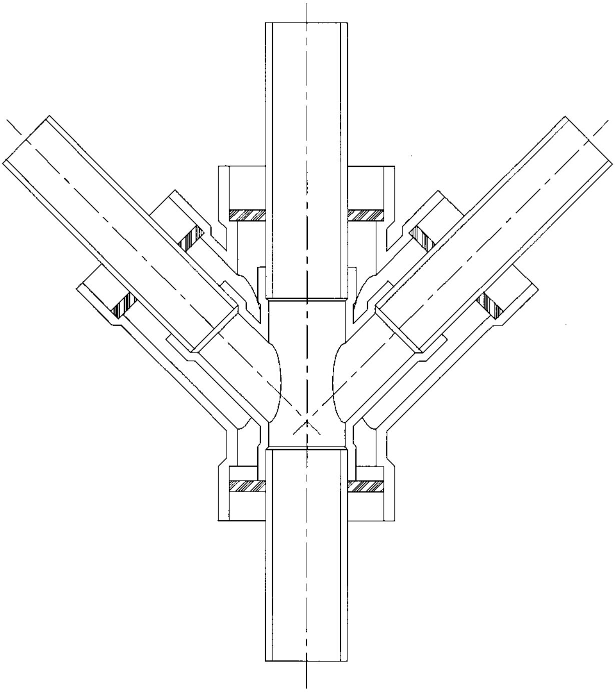

FIGURE B13.51 Example of thermoplastic 45° double reducing lateral (wye) using molded code approved carrier fitting. *(Orion Fittings, Inc.)*

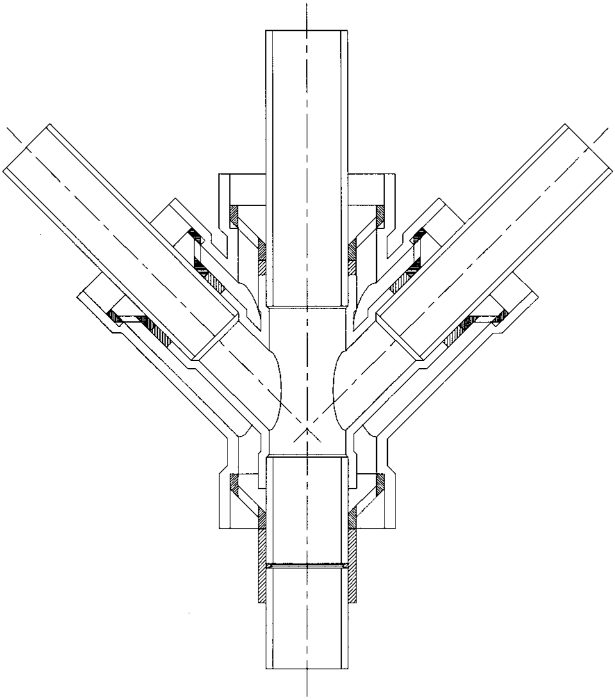

FIGURE B13.52 Rionlock™ thermoplastic restrained 45° double reducing lateral (wye) using molded code approved carrier fitting. *(Patent Pending; Orion Fittings, Inc.)*

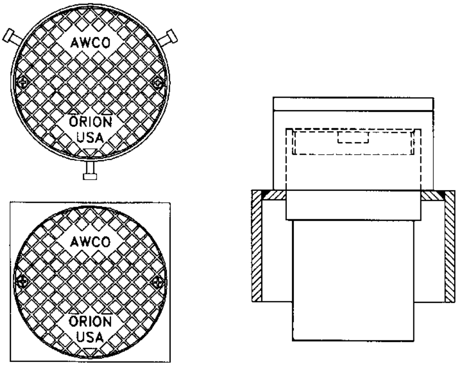

FIGURE B13.53 Example of a thermoplastic double containment clean-out with nickel-bronze finished floor adjustable cover *(Orion Fittings, Inc.)*

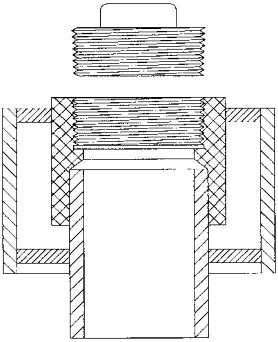

FIGURE B13.54 Example of a thermoplastic double containment clean-out. *(Orion Fittings, Inc.)*

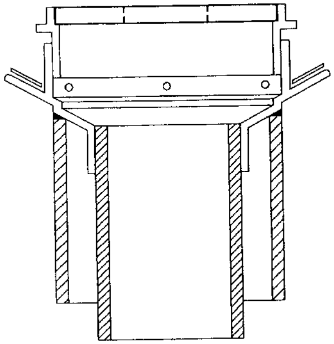

FIGURE B13.55 Example of a thermoplastic double containment floor drain capable of withstanding a 10,000 pound load applied over its cover. *(Orion Fittings, Inc.)*

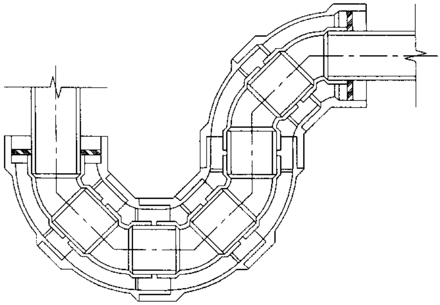

FIGURE B13.56 Example of a thermoplastic double containment P-trap. *(Orion Fittings, Inc.)*

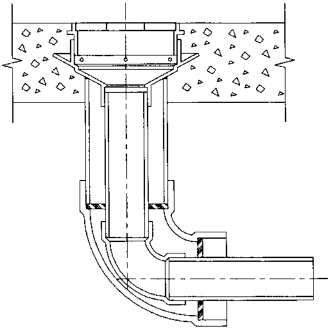

FIGURE B13.57 Example of a thermoplastic double containment floor drain with factory preassembled 90° elbow outlet. *(Orion Fittings, Inc.)*

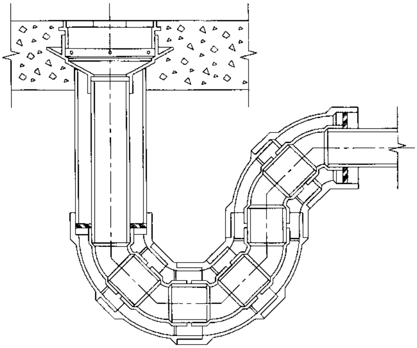

FIGURE B13.58 Example of a thermoplastic double containment floor drain with factory preassembled P-trap outlet. *(Orion Fittings, Inc.)*

LAYOUT OF DOUBLE CONTAINMENT PIPING SYSTEMS

A double containment piping system is only partially designed once its piping and components have been sized and their pressure ratings established. The layout of the system must then be determined, taking into account all the requirements of the application. These include: flexibility requirements, installation requirements, inspection, examination and testing requirements, leak detection–system requirements, and others. It also involves the detailed design of interconnecting parts, design and placement of centering devices (interstitial supports), and double containment fitting details. Space issues are of the utmost importance, as potential interferences may exist between inner and outer components. This includes interferences that may result from differential movements that occur when inner and outer systems are subjected to different amounts of thermal expansion, which may be undesirable. The allowable space can have a profound effect on the fabrication and installation of a system.

System layout is interrelated to all other aspects of system design by virtue of performance criteria. For instance, the final pressure rating of a primary pipe system will be directly affected by the layout and the resulting frictional losses that are calculated. Each layout choice will also result in unique stress levels developed in the system components, based on design temperatures and pressures. The distribution of these stresses will also change upon each change in layout detail. Layout choices will have an effect on other aspects of system design as well (i.e., structural, heat transfer, fluid dynamics, etc.). In each design, the layout process involves first selecting a layout and then determining its suitability for the given design conditions. Often this involves computing stresses or performing some other analysis to determine if the chosen layout will result in a safely working system over its design life; if it is determined that the system may fail under the layout that has been selected, aspects of the layout must be changed and a new analysis performed. By its very nature, the layout process involves trial and error on the part of the engineering design team.

There are two layout issues to which the first time designer and customer of a double containment piping system must pay special attention at the start of a project. The first concerns the overall size of double containment piping and its components. By its nature, the overall diameter sizes are much greater than their corresponding single-walled primary piping systems. While this aspect of double containment piping sounds obvious, it often is a source of surprise and frustration for facility owners and piping designers. This aspect of double-containment piping is a limiting factor, particularly when a system is being installed as a retrofit into an existing facility, or a specified slope has to be met.

A second major item of importance has to do with allowing sufficient clearance for primary fittings to be installed or fabricated within secondary containment fittings; in other words, providing adequate clearance between the two components or, stated differently, proving adequate internal clearance. This item is important for all systems, but it is highly important for those requiring an internally flexible design and layout.

It is difficult to present specific criteria for all layout details that may be encountered in a system design. There are an infinite set of conditions that may be encountered; no two piping systems are ever completely alike. However, considerations for many of the common aspects of double containment piping system layout can be described.

The layout selected will have an effect on the overall system performance. The overall layout of any system, consisting of each individual detail acting together to form a complete system, must always be analyzed as to its suitability by a competent professional to achieve a safe, working system.

Pressure Piping Systems

Pressure piping systems include both aboveground and underground systems that operate at 15 psig (1.1 bar) or greater internal pressure, or operate at vacuum conditions (below 0 psig). Secondary containment portions of these systems may also be pressure rated to the same extent as the primary, but not in all cases. The choice is normally up to the designer, although code requirements may dictate whether it is required. Systems that operate under vacuum conditions (less than 0 psig, 14.7 psia, 1 bar absolute) are also classified as pressure piping systems even if they will never be subjected to a positive internal pressure.

The layout of a pressure piping system is far from an exact science and is not taught in schools. Most competent designers develop their techniques from experience and from working with other designers. The ASME B31 Pressure Piping Codes state many useful layout concepts based upon allowing adequate space and minimizing the stresses of pressure piping systems. To minimize stresses in a system layout, as described in the ASME Codes, one must provide a system whose stresses are well balanced during operation. A system whose stresses are evenly balanced will result in a system where detrimental stresses will not occur during operation. These criteria, which set a worldwide accepted basis for determining the layout of a pressure piping system, also provides the designer with guidance to determine if a system can have a restrained or flexible layout.

Nonpressure Double Containment Piping Layout Considerations

Nonpressure systems include both aboveground and underground systems whose primary systems operate at a pressure between 0 and 15 psig (bar). The major type of nonpressure system is the gravity flow chemical drain waste and vent (DWV) system, which is designed to drain chemical waste by means of gravity to sewers, treatment or holding tanks, or a treatment facility. The secondary, containment portions of these systems are typically designed to the same performance specs as the primary system (i.e., to a pressure rating of 10 ft of head, or 0.3 bar). In some instances, the secondary containment jackets of these systems may be designed in an open-ended fashion, whereby the secondary containment jacket flows open ended over a tank or treatment pond. When a system is allowed to be designed in such a manner, the pressure rating of the secondary containment at most will accommodate any head buildup due to developed back pressures. The secondary, containment design normally is the choice of the designer, although Code or regulatory requirements may dictate what is required.

While many underground waste systems are of the gravity-fed, nonpressure type, some double containment waste-piping transfer lines can be pressurized due to the distance they must convey the fluids, or due to a lack of slope. Also, in some systems where a substantial change in elevation exists (> 33 ft, 10 m), the line may have to be reclassified as a pressure system, as some of its components will be subject to greater than 15 psi (1.1 bar). In many projects, the site does not allow for much change in elevation. Since elevation changes will be limited, the system may have both nonpressure and pressure characteristics. The usual design in such applications involves the nonpressure line (lines) draining into a sump, whereby the fluid is then moved within a force main by the use of a sump pump.

Underground piping may include pressure transfer lines that are routed underground at the choice of the owner. This may be due to reasons of surface aesthetics, unavailable surface space due to surface restrictions, the existence of underground tanks, or to control-piping temperatures-safety concerns. In the case of petroleum marketing outlets, piping is placed underground for all four reasons. Some aspects of underground layout apply to nonpressure lines and pressure lines. General layout considerations for underground pressure and nonpressure piping double containment systems are discussed here.

Many aspects of nonpressure waste piping and other non-ASME Code underground piping layout practices are defined in many localities by building or fire codes. There are also many well-defined layout practices that have been developed by various professional disciplines and their organizations (e.g., American Society of Civil Engineers, American Water Works Association, American Society of Plumbing Engineers, etc.). However, most competent designers involved in nonpressure piping and underground pressure piping applications gain their layout knowledge from working on actual projects and by following the practical methods of other accomplished designers.

Designers of nonpressure chemical DWV systems (e.g. from laboratories) should be aware of the differences between a plumbing code [e.g. IPC (BOCA/ICBO), UBC (IAPMO), CSA, etc.] and a design code (e.g. ANSI/ASME B31.3, 31.9). Design codes cover the mechanical design integrity of the components and system, whereas a plumbing code typically does not. Though a design code may not be required for certain systems by local jurisdiction, designers should consider applying such codes to verify the mechanical integrity of the system.

Chemical Waste DWV Piping Systems, Acid Waste DWV Piping Systems, and Chemical Sewers

Chemical waste piping systems include those that serve as drain, waste, and vent piping for chemicals of all types. These types of systems are commonly referred to as *acid waste DWV systems* by plumbing engineers. Although the name implies that they are specific to the disposal of acids, they may be designed to convey acids, bases, organic chemicals, chlorinated solvents, or inorganic chemicals of all types. The name is designated as acid-waste piping because acids are among the most commonly encountered chemicals in laboratory and plating applications whereby such chemicals are commonly discharged into the waste piping after they have served their purpose. The plumbing and sanitary engineering profession has historically designated this piping with its specific label to distinguish it from other sanitary drain, waste, and vent lines in building services.

Chemical-waste materials should not be discharged into a regular sewer system without first being neutralized or treated in some fashion. Many chemical waste piping systems are designed to allow fluid to discharge into a neutralization basin or treatment pond, where the chemicals are treated. The neutralized or treated product is then allowed to be discharged into the sewer system or waterways once the effluent is within prescribed purity limits.

Layout considerations for these systems include such items as determination of diameter sizes (capacity of the piping), slope determination, determination of component style, and venting requirements. Other system selection factors (such as material selection) can, in certain locations, be based on fire-related considerations such as flame and smoke spread ratings of the materials, and adherence to U.L. (Underwriter Laboratories) and F.M. (Factory Mutual) standards. Whenever a layout is to be determined for nonpressure waste systems or other type of underground system, the authority having local jurisdiction must be contacted as to what codes, standards, and permits apply.

Whereas the design and layout of most sanitary drain, waste, and vent and other plumbing-related piping is governed by strict building codes, chemical, waste piping systems are not regulated in all areas. The reason that it may not be covered in certain local building codes is that in many municipalities it is classified as process piping. Process piping is ordinarily not covered by the general building codes. However, an aboveground system may be still subject to fire code regulations, depending on the locality where it is to be installed. Although there may not be strict coverage under building codes, the design and layout of such systems should still follow the well-defined engineering practices of ordinary DWV piping. This includes sizing practices, slope determination, provision of proper venting, and other principles of design and layout.

One aspect of chemical waste piping design that tends to be common among systems of this type is that most systems have at least part, if not all, of the system buried directly under a building slab or behind walls or between floors, which usually means very limited access to the piping system. If there is a leak detected, portions of the building usually have to be excavated to get at the pipes. It also means a disruption of ongoing activities within the building and could result in lost revenue in the event of a repair. Therefore, the selection of material for the secondary containment pipe becomes critical in this situation. The fluid will have a tendency to remain in the annulus for a fairly long period of time, at least until a repair operation can be scheduled. For these reasons, there is added incentive to use homogeneous inner and outer materials.

Floor Drains and Other Fixture Outlets. The purpose of a chemical or acid waste drainage system is to collect waste from laboratory sinks, fume hoods, and floor drains. However, other applications exist for aboveground drain systems to allow drainage of fluids from process equipment, rinse-down areas, potential spill areas around tanks and vessels, and other areas in order to transport the waste to a remote treatment area. These lab sinks, fume hoods, and floor drains are the points of introduction of the waste fluids.

Typical diameters for outlet primary piping from fixtures range from NPS 1½ (DN 40) diameter to NPS 4 (DN 100) diameter. These outlet pipes must be equipped with secondary containment piping ranging in sizes from NPS 3 to 8 (DN 80 to 200) diameter sizes, respective of the aforementioned primary pipes. Outlets from floor drains are usually NPS 2 (DN 50) in diameter to a maximum of NPS 6 (DN 150).

Figure B13.59 details an ideal configuration for fixture outlets that must be equipped with secondary containment. In this example, the secondary containment jacket is shown as being directly welded (or bonded) to the underside of the sink, basin, or tank. This is possible only in systems involving homogeneous or highly compatible materials. It is something that is highly encouraged in the layout of such systems as it will lead to a transition involving high integrity. A reason why this is important is that it allows the transition from single containment to double containment to be made above the level of the first primary pipe joint. In contrast, Fig. B13.60 illustrates a transition from single containment to double containment where the transition is made below the level of the first joint. Either transition is acceptable if it occurs aboveground in an area considered to provide adequate

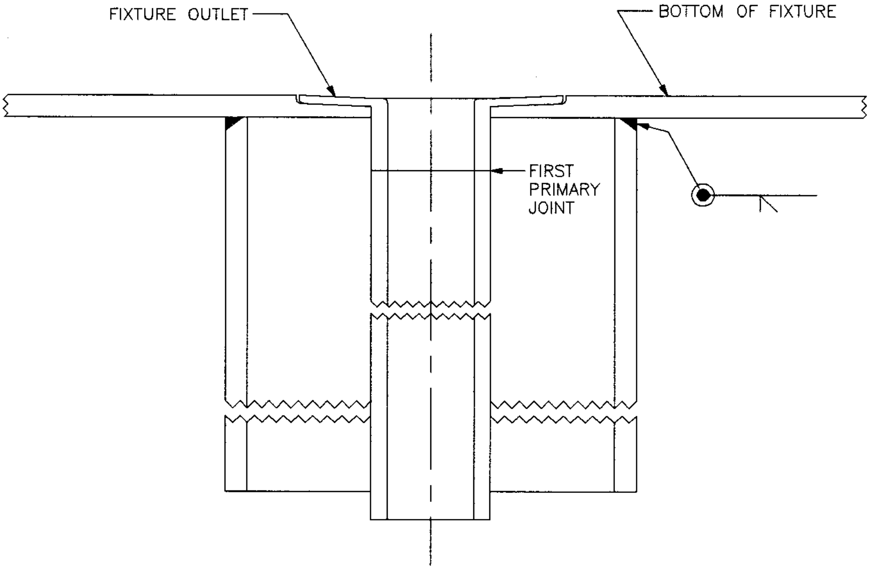
FIXTURE OUTLET
BOTTOM OF FIXTURE
FIRST PRIMARY JOINT

FIGURE B13.59 Configuration for fixture outlets where the first carrier joint is below the level of the secondary containment jacketing.

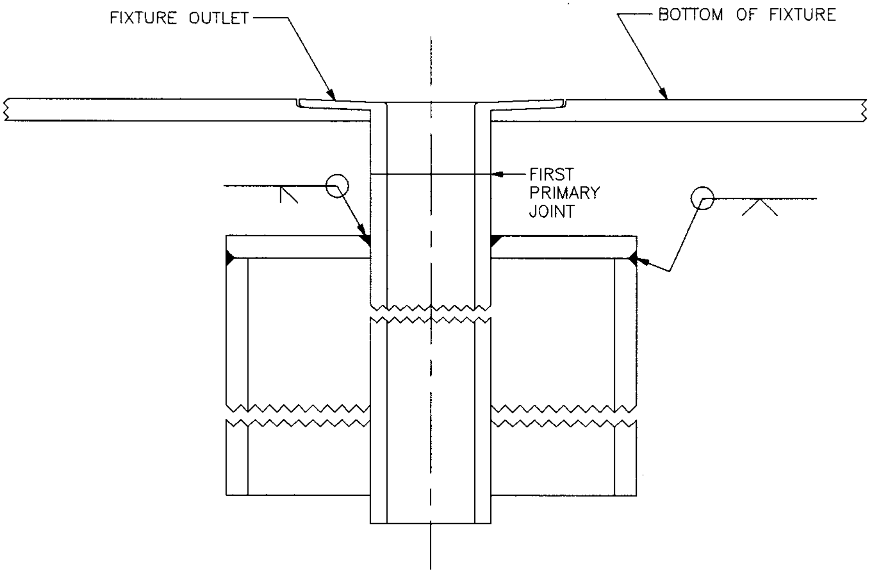
FIXTURE OUTLET
BOTTOM OF FIXTURE
FIRST PRIMARY JOINT

FIGURE B13.60 Configuration for fixture outlets where the first carrier joint is above the level of the secondary containment jacketing. In this type of arrangement, a leak at this joint could escape around the secondary containment pipe.

secondary containment. If the transition occurs underground it is critical that it be made above the level of the first joint. Otherwise, a concrete sump equipped with a leak detection probe may have to be constructed around the area to prevent the possibility of leakage to the surrounding soil.

Floor drains also have many specific concerns that need to be addressed. The same transition concerns expressed in the previous paragraph apply. However, there are a number of additional concerns in comparison to fixture outlets. Figure B13.61 illustrates examples of typical double containment floor drains. These floor drains should be provided with a flashing in order to collect any leaks safely that occur where the brim is sealed into the floor, something that can be expected to occur eventually in many floor drains. There should be perforations provided in their basins that allow collected fluids that leak around the brim to drain into the primary portion of the drain, which will allow fluids to flow down their respective primary pipe outlets. It is important that fluid never be purposely introduced into the annulus of double containment piping because a leak would then be sensed and repair procedures may be initiated, though not needed. Thus, collected leaks around a brim are discharged into the primary portion of the drain.

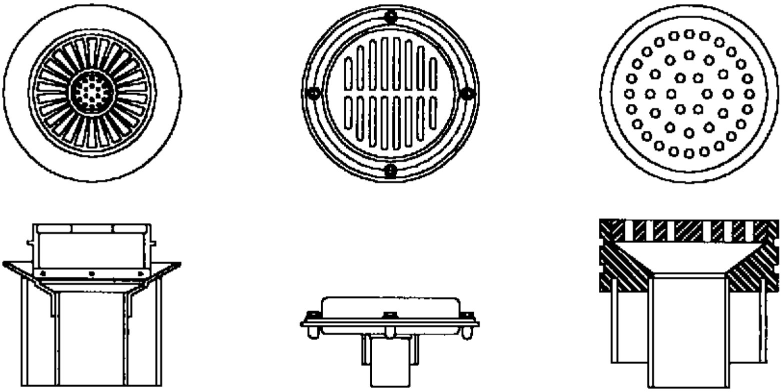

FIGURE B13.61 Illustration of three types of double containment floor drains: (a) polypropylene *(Orion Fittings, Inc.);* (b) stainless steel *(J.R. Smith);* (c) epoxy or vinyl ester RTRP. *(Fibercast).*

In Fig. B13.61, the transition from single containment to double containment is made by attaching the secondary containment pipe directly to the underside of each drain's drip pan-flashing by using a weld or bond. This is often desirable for floor drains, as they typically are directly imbedded in concrete flooring. This is readily possible if the drain, the primary pipe, and the secondary containment pipe are constructed of homogeneous materials; if it is not possible (i.e., in hybrid material systems), then in most jurisdictions in the United States, a concrete sump has to be constructed around the area with some form of monitoring applied.

Use of Traps. Floor drains and fixtures need to be provided with traps at their outlets in chemical systems where there is a possibility of backup of gases from the system through the fixtures or drains.

The most common type of trap in a chemical DWV system is the P-trap. A typical double-containment P-trap is illustrated in Fig. B13.62. A requirement of

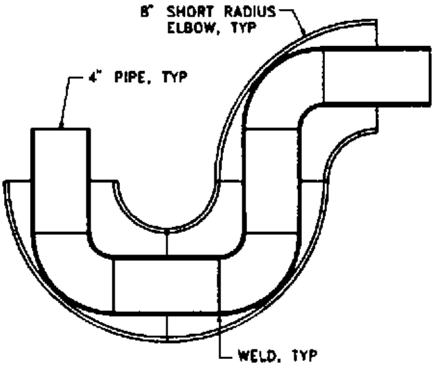

FIGURE B13.62 Typical double containment P-trap where the system uses metallic or thermoplastic butt welding/fusion pattern pressure fittings as the basis to fabricate a non-plumbing-code approved drainage system.

P-trap design is that a minimum of a 2-in (50 mm) water seal be provided in the design. In a trap equipped with secondary containment, the annulus will always have the same theoretical seal dimension as the primary pipe, plus a small amount equal to the sum of the annulus available at the bottom of the bottom elbow and the wall thickness of the primary elbow. (One should note that the annulus is meant to remain normally empty, thus the seal dimension of the secondary pipe is described only in theoretical terms.) An alternative arrangement is illustrated in Fig. B13.63, where single-walled components are housed inside a secondary containment sump.

Another feature of traps that must be considered is whether or not the primary P-trap needs to be provided with a cleanout at its low point. Cleanouts are often provided at the bottom of traps in ordinary plumbing systems to allow the drain

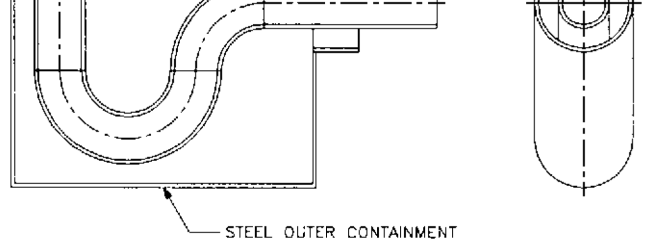

FIGURE B13.63 Fabricated double containment P-trap incorporating a cleanout, where the system uses metallic or thermoplastic butt welding/fusion pattern pressure fittings as the basis to fabricate a non-plumbing-code approved drainage system.

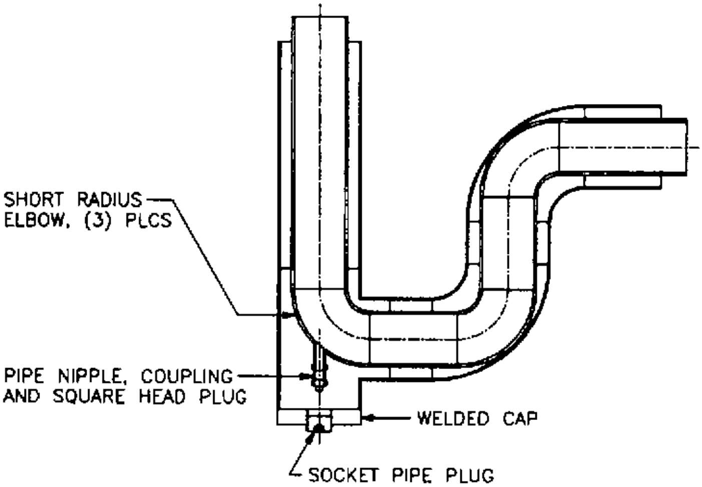
SHORT RADIUS ELBOW, (3) PLCS
PIPE NIPPLE, COUPLING AND SQUARE HEAD PLUG
WELDED CAP
SOCKET PIPE PLUG

FIGURE B13.64 Alternative arrangement for P-traps involving carrier components housed inside a specialized secondary containment tank-like structure.

to be unclogged of collected aggregates, hardened foam, etcetra. Therefore, if the trap requires a cleanout to be provided, then a specialized arrangement is required. Figure B13.64 illustrates an arrangement where the primary part of the trap has cleanout capability; the secondary containment portion is provided with a removable access cover that is further equipped with a digital liquid-sensing probe. An arrangement of this type would need to be placed inside a sump that can safely house such an arrangement and allow the safe collection of fluids when they spill. Care should be taken when opening a cleanout in this configuration, as the hazardous chemicals will likely be present in the bottom of the P-trap. The maintenance worker-contractor should be equipped with the proper safety clothing, masks, and protective eyewear.

Underground Horizontal Headers. Most systems involve one or more vertical waste stacks that collect waste from horizontal branches and floor drains and discharge waste vertically into a common header installed under the building. Each stack normally connects to a header through either a 90°-long sweep elbow, or through a long-turn-tee-wye (45° lateral with a 1/8th bend). Floor drains that are used to collect emergency spills are typically connected to an underground P-trap that is in turn connected to the header at the exit of the trap. Underground headers usually connect outside the building to an underground main, are fed into a common sump or basin, or are drained into a neutralization tank.

A typical underground header system used at a laboratory-type facility is illustrated in Fig. B13.65 and shown in the accompanying photograph of the same system, Fig. B13.66. The layout of the system is typical of a two-story laboratory building that collects wastes from various fixtures, floor drains, and vertical waste stacks. Underground header systems should have orthographic plan view drawings prepared, similar to that shown. An overall plan view showing all headers should be prepared, as well as individual drawings for each header. The individual headers should include details of all connections, including fitting types, location, and method of attachment (type of weld or bond).

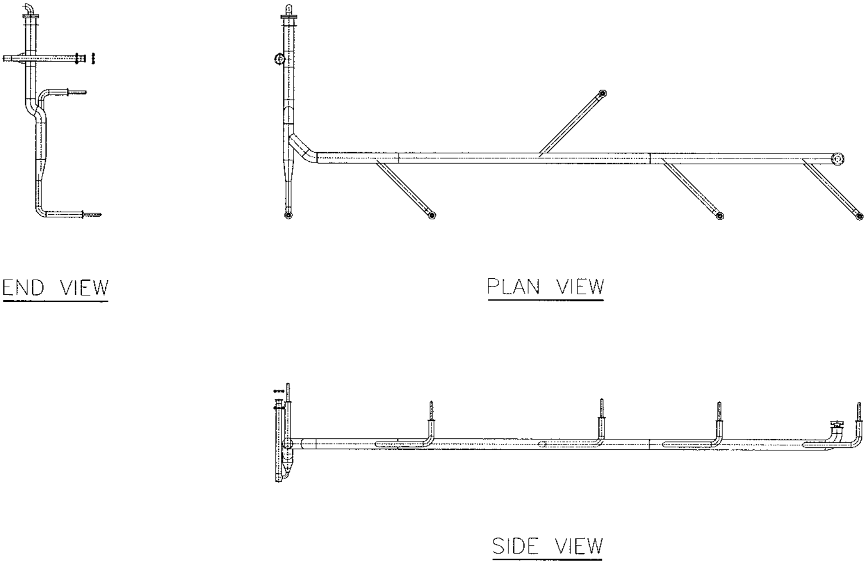

FIGURE B13.65 A typical underground lab-waste header subassembly in a gravity-waste application.

An alternative design for underground headers that fall within a building's limits is to place a single-walled header within a lined or coated open trench. This can be done on all or a portion of an underground header that is within a building's limits. Fig. B13.67 is an example of single-walled underground headers contained within a coated, open trench. In this example, perpendicular double containment pipes are terminated upon entry to the common trench, whereby multiple pipes are secondarily contained by the associated common open trench. Shown in Fig.

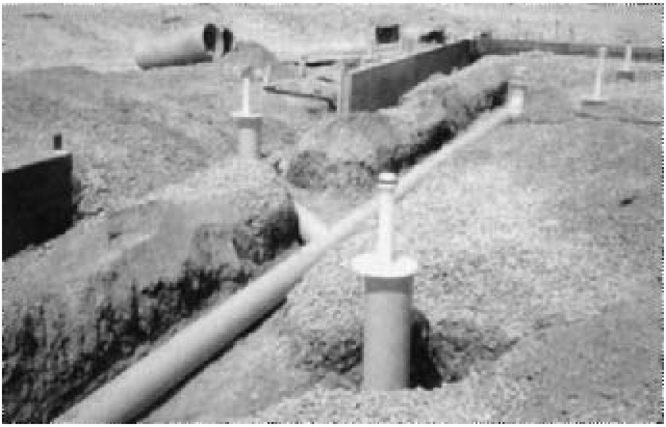

FIGURE B13.66 Photograph of the header illustrated in Fig. B13.65.

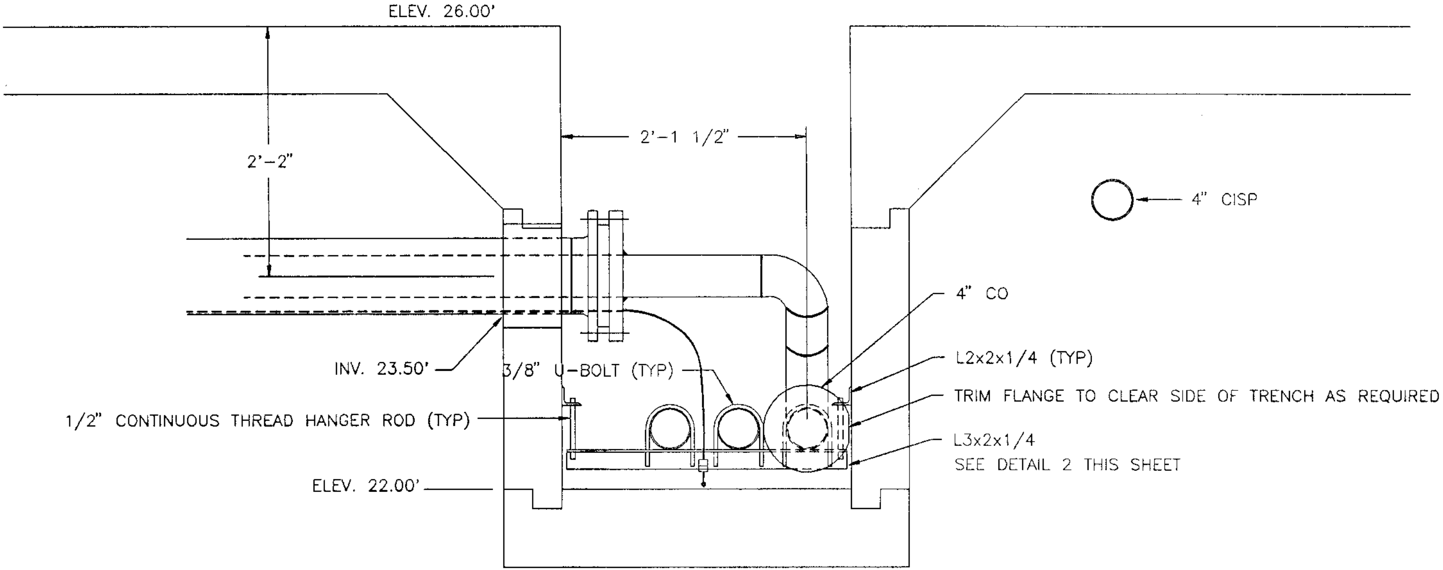
ELEV. 26.00'
2'–2"
2'–1 1/2"
4" CISP
4" CO
L2x2x1/4 (TYP)
TRIM FLANGE TO CLEAR SIDE OF TRENCH AS REQUIRED
INV. 23.50'
3/8" U–BOLT (TYP)
1/2" CONTINUOUS THREAD HANGER ROD (TYP)
L3x2x1/4
SEE DETAIL 2 THIS SHEET
ELEV. 22.00'

FIGURE B13.67 An example of single-wall underground chemical waste headers housed inside of a coated secondary containment concrete trench in a chemical weapons testing and research facility for the U.S. Army Corps. of Engineers. *(Poole & Kent Co.)*. *(From* ''Handbook of Double Containment Piping Systems,'' *C. Ziu, McGraw-Hill, New York, 1995.)*

B13.68 is the structure designed to support the different pipes. While not indicated in the drawing, stainless steel or fiberglass pultruded grating is placed over the trench to prevent a worker's falling into the open trench.

In this example, there are also underground side headers feeding into the trench, each of which is individually double contained before it enters the common trench. When more than one header can run parallel to others it becomes economical to place them inside a common trench. Designers must consult with the authority having local jurisdiction to determine if a common means of secondary containment can be used for more than one primary pipe. Also, while open trenches are readily suitable inside a building, they lose some of their appeal outside a building. Outside building limits, rainwater will readily enter an open trench, which means that rainwater flow will have to be monitored and diverted to a waste treatment facility when contamination is detected. This can mean a very large increase in capacity for the waste treatment facility, making the use of open trenches less desirable outside a building's limits.

Underground Horizontal Mains. When an underground header exits a building's limits, horizontal waste piping either continues as an underground main or ties in via branch connection to a main. Mains may collect wastes from one or more headers, possibly multiple headers from more than one building. An underground main typically carries waste to a remote site where it is processed, stored, or discharged into an industrial sewer. The main may either be a gravity-fed drain pipe, or it might operate as a pressure force main. The decision whether to move the chemical waste fluids by either gravity or pressure depends on the present and future capacity needs, the distance to be traveled, and available slope.

Several drawings are needed to depict the layout of the underground mains accurately. The overall schematic of the mains, including their relation to buildings and other surface structures, should be shown on a plan-view drawing, which should show all pipes, including branch connections and changes in direction of the piping. The location of fittings, manholes, and other major details should also be indicated. Any horizontal change in elevation should be shown by preparing a profile view drawing, indicating all changes in elevation of the pipe (or pipes) and the surface geography. The elevations should be indicated at various points along the drawing in order to determine burial depths, locations of manholes, and other details accurately. Whenever feasible, a combined drawing should be prepared so that it is easy to coordinate location and elevation. Both drawings should be drawn to scale in order to assist in preparing accurate takeoffs and estimates of project costs.

In addition to these drawings, detail drawings should be prepared for all unique aspects of underground mains. At least one typical detail drawing needs to be prepared for each unique section. A section is considered unique if there is any change in size, diameter (including annular space), wall thickness, materials of construction of the primary or secondary containment piping, type and spacing of interstitial supporting devices, or type of welds (bonds). If any of these variables changes, then a separate detail drawing needs to be prepared.

A typical drawing illustrating a combination plan view and profile view of an underground gravity-fed double containment main is shown in Fig. B13.69.

Gradient of Internally Supported Headers to Prevent Pocketing. If primary pipes are intermittently supported by means of internal centering supports (centralizers), they must not contain sag pockets in order to drain freely. To eliminate pockets, each downstream internal centralizing support must be lower than its upstream neighbor by an amount that depends on the sag of the pipe between them. A

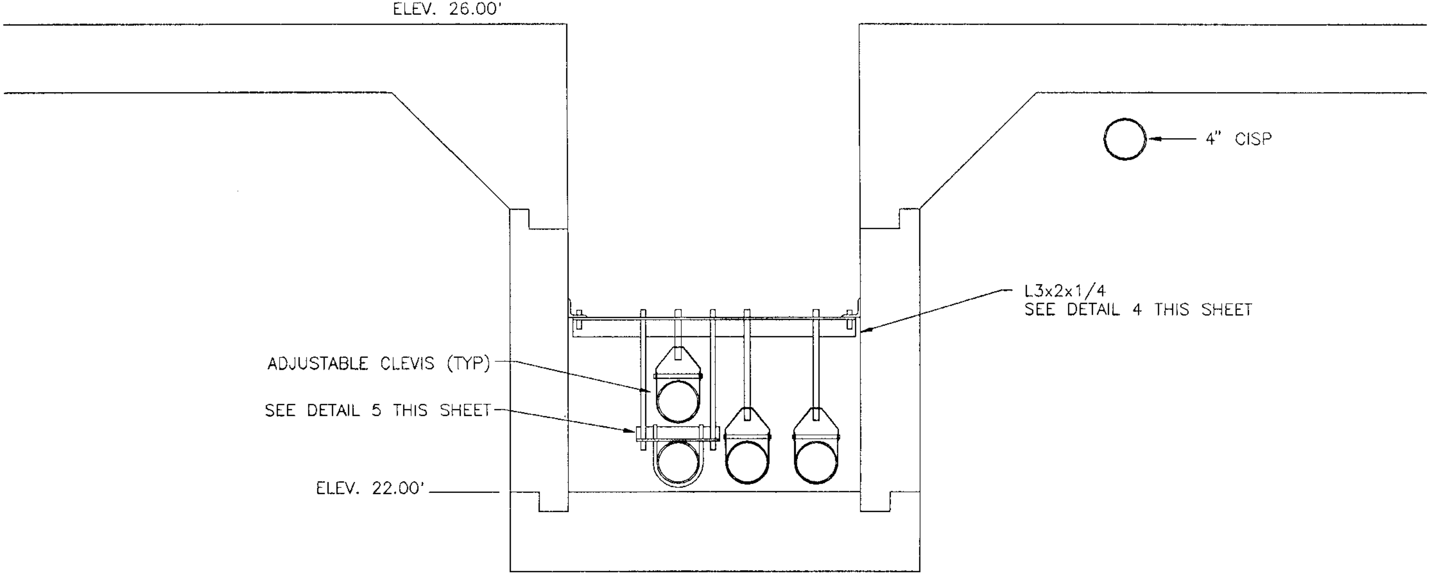
ELEV. 26.00'
4" CISP
L3x2x1/4
SEE DETAIL 4 THIS SHEET
ADJUSTABLE CLEVIS (TYP)
SEE DETAIL 5 THIS SHEET
ELEV. 22.00'

FIGURE B13.68 A structural supporting system used to support the pipes shown in Fig. B13.67. *(Source: Poole and Kent Co.)*

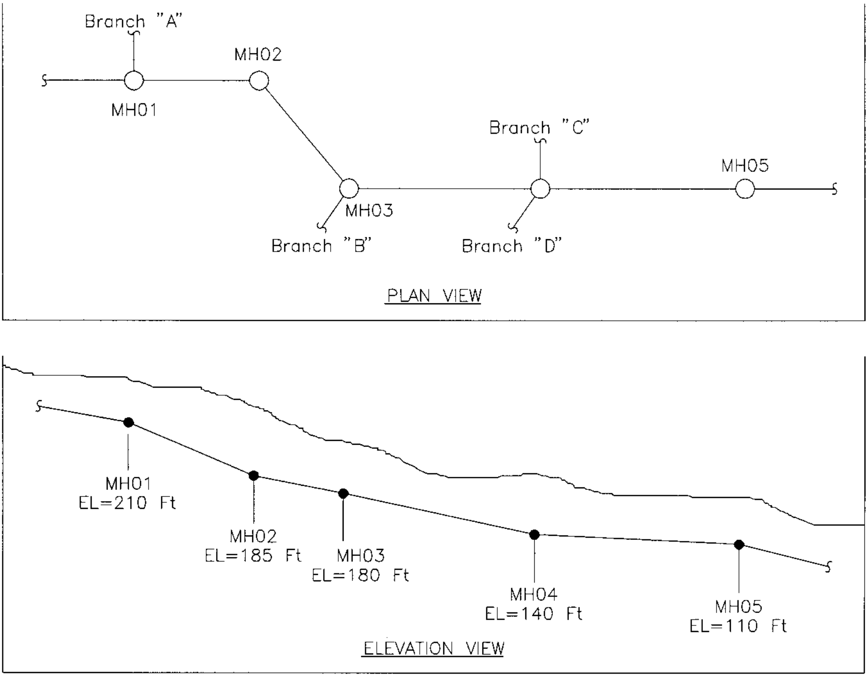
Branch "A"
MH02
MH01
Branch "C"
MH05
MH03
Branch "B"
Branch "D"
PLAN VIEW
MH01
EL=210 Ft
MH02
EL=185 Ft
MH03
EL=180 Ft
MH04
EL=140 Ft
MH05
EL=110 Ft
ELEVATION VIEW

FIGURE B13.69 A typical combined plan- and profile-view drawing for an underground gravity-flow chemical sewer.

practical average gradient of internal support elevations to meet this requirement may be found by using the following equation B13.1.

$$G = \frac{4y}{L} \tag{B13.1}$$

where G = gradient, in/ft
L = span, ft
y = deflection, in

The difference in elevation between a downstream internal centering support and its upstream neighbor must be four times the theoretical deflection of the pipe between them to establish the grade. It has been suggested as a conservative measure to use twice the theoretical mid-span deflection when determining the slope of the double containment pipe. If so, the elevation difference between successive supports would be eight times the theoretical mid-span. The elevation of the internal supports is equal to the invert of the secondary containment pipe.

Use of a Common Sump with Discharge into Pressure Force Mains. In the plan and profile view of Fig. B13.69, the elevation changes by more than 100 feet. What happens if a change in elevation is not available to allow the piping to experience

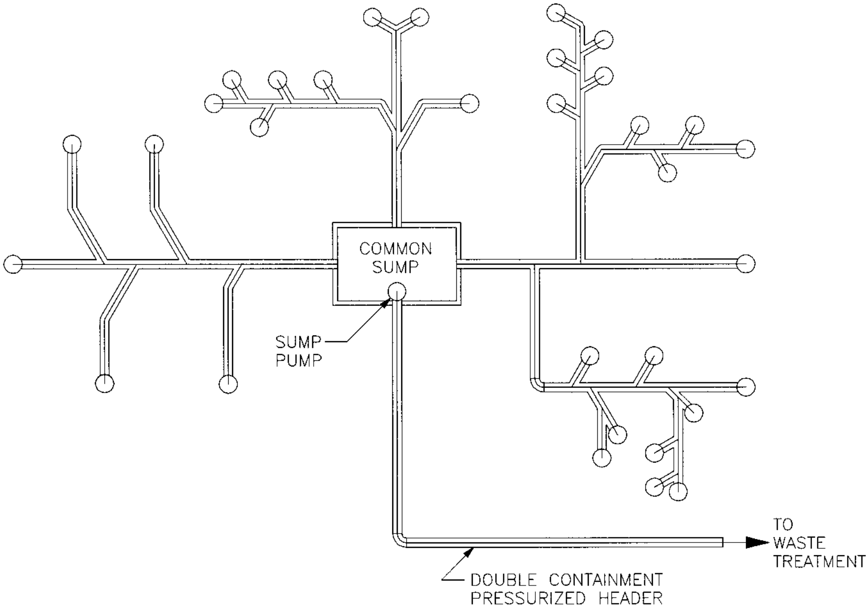

FIGURE B13.70 A typical common sump system with a pressurized discharge header.

the minimum change in elevation required to sustain the minimum required slope? The normal procedure in this instance is to drain all horizontal underground headers into a common sump and then pump the fluids involved by use of a sump pump through a pressure-force main. When this method is used, the underground header should be designed as a pressure pipe, according to all the rules of design for pressure pipes described throughout this book.

An example of a system of this type is illustrated in the plan view shown in Fig. B13.70. When such a design is used, the sump may have to be provided with an integral liner and the interstitial space monitored for leaks, as it is in effect an underground storage tank. Local authorities having jurisdiction vary in their interpretation of this type of arrangement; thus, it is important to consult with them on any given project.

Underground Fitting-in-Manhole Arrangements

In nonpressure and pressure systems that are installed underground, it is common to avoid direct burial of double-containment fittings. Most direct burial of double containment fittings is limited to bends and elbows. The direct burial of branch fittings is often avoided due to the difficulty in installing these fittings underground, leak detection concerns, and other reasons. Where there is a substantial amount of thermal expansion and contraction expected, the installation of double containment fittings underground of all types is usually avoided.

A common design approach for underground system (pressure and nonpressure) layout of fittings is to place single-walled fitting connections inside secondary con-

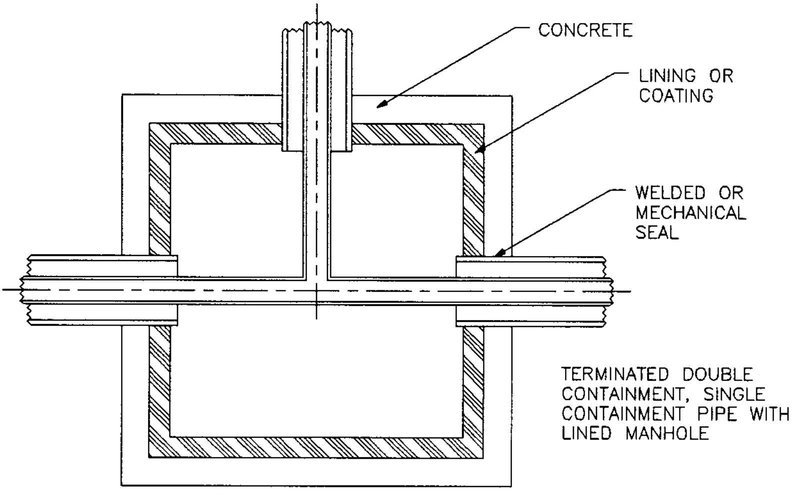
CONCRETE
LINING OR COATING
WELDED OR MECHANICAL SEAL
TERMINATED DOUBLE CONTAINMENT, SINGLE CONTAINMENT PIPE WITH LINED MANHOLE

FIGURE B13.71a Plan details for manhole MH01 from Fig. B13.69.

tainment manholes. In most situations, it becomes more economical to terminate secondary-containment piping in the entry to a secondary containment manhole, thereby making use of single-walled fittings. Manholes, if constructed of lined or protected concrete, effectively serve as a means of secondary containment. Any secondary containment piping penetrations can be made watertight by the use of mechanical seals, by welding secondary containment piping to manholes (if a compatible lining material is used), or by using a waterstop with grouting applied

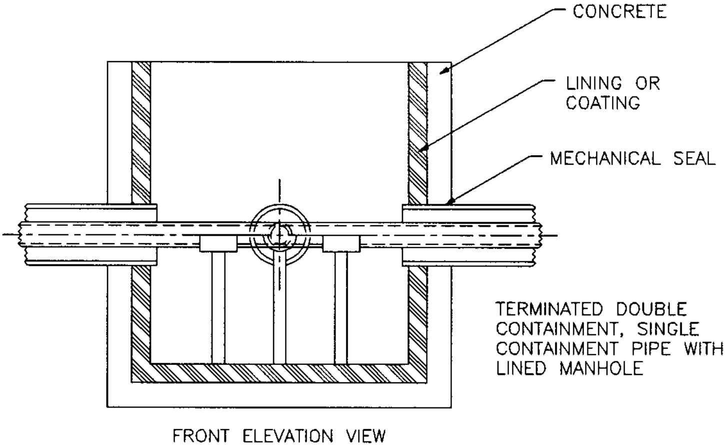
CONCRETE
LINING OR COATING
MECHANICAL SEAL
TERMINATED DOUBLE CONTAINMENT, SINGLE CONTAINMENT PIPE WITH LINED MANHOLE
FRONT ELEVATION VIEW

FIGURE B13.71b Front elevation details for MH01 from Fig. B13.69.

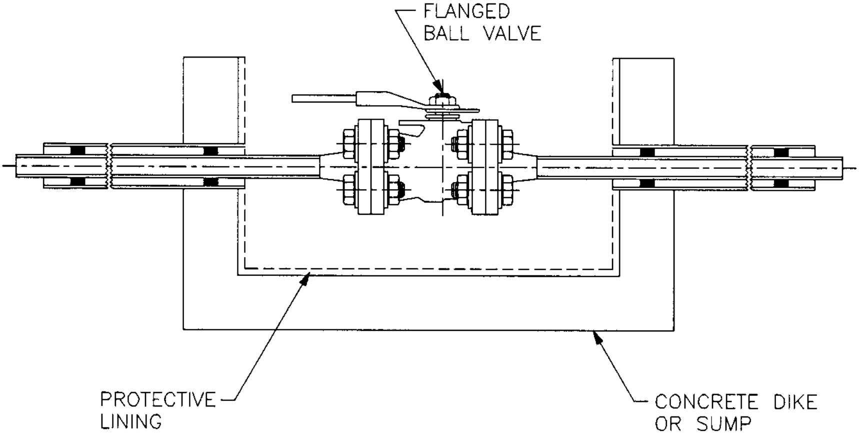

FIGURE B13.72 An example of a valve contained inside a secondary containment open sump.

around the outer pipe circumference. Grouting can also be applied on the inside, outside, or both.

If manholes are designed to be readily accessible, primary piping fittings can be joined by using flanges. This greatly aids in the installation of such items, and makes maintenance easier. In addition, expansion joints can be incorporated in the layout, being positioned between the fittings and the pipe flanges. This can serve as a means of alleviating thermal expansion in the straight pipe sections (if the primary piping is designed in an unrestrained manner) and serves as a means of isolating fittings and complex fitting arrangements. As examples of possible designs, details of underground fitting manhole arrangements, for manhole MH01 that is referenced in Fig. B13.69, is shown in Fig. B13.71. An example of a valve in a secondary containment manhole is shown in Fig. B13.72.

When using a lined or coated concrete structure as a means of secondary containment, it is necessary to incorporate some means of leak detection in such structures. This is due to the fact that single-walled fittings in such structures, or their flange connections, may be a source of leaks. Furthermore, double containment pipes that have a non-open-ended annulus at the entry to such structures may also have some means of leak detection added to the straight pipe sections as well.

As an alternative design, the arrangement shown in Fig. B13.73 may be used. In the alternative arrangement, the fitting area that is positioned in the manhole is part of an uninterrupted double

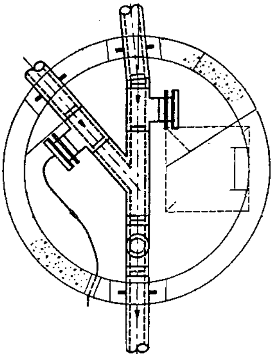

FIGURE B13.73 A plan view of a manhole detail whereby the piping components housed within feature continuous double containment.

containment piping zone. The arrangement may be positioned as such to allow for easier installation of the fitting or fittings, incorporation of leak detection connections, future easy access, etcetra. When this type of arrangement is used, a manhole does not always have to be lined or coated, nor does it have to be provided with its own leak detection.

Thermal Expansion Layout

Using Internally Flexible Systems for Handling Differential Thermal Expansion. When adequate room to prevent contact due to differential expansion and contraction between primary and secondary containment elbows does not exist, the diameter of secondary containment elbows may be increased to allow primary elbows sufficient room to flex. In systems that have a significant amount of thermal expansion, expansion loops, offsets, or additional changes of direction might be required to achieve the desired level of flexibility. Alternatively, expansion joints may be added into the inner or outer pipe sections. Most nonmetallic materials have a linear coefficient of thermal expansion that is far greater than that of metals; additionally, they are subject to early failure due to creep-strain accumulation when they are designed in a restrained fashion. RTRP materials do not yield, and as such, they must be laid out with sufficient flexibility to avoid premature failure. However, due to the design of certain components and the high strength of machine-made RTRP components, it is usually best to lay out machine-made RTRP systems as restrained systems. This section discusses the different unrestrained possibilities for accommodating differential thermal expansion in these systems.

Expansion Joints in Double Containment Systems. Expansion joints may be used in principle on both primary and secondary containment piping systems. They may be used in both primary, and secondary containment portions of nonrestrained systems. However, there are many limitations to their use. If expansion joints are to be used as part of a primary, piping system, ready access to the expansion joint must also be included in the design. This means provision of a tank or access device as a component of the secondary containment system. In underground systems, the use of expansion joints for compensation of primary pipes is limited to manholes or where a trench is used as a means of secondary containment. On the other hand, expansion joints may be readily applied to secondary containment pipes in aboveground, nonrestrained systems to compensate for differential thermal expansion. This is true regardless of which pipe is experiencing the larger temperature change.

Use of Directional Changes (Elbows) to Accommodate Expansion of Double Containment Pipe Straight Sections. The natural changes of direction (elbows) that exist in any system can be used to accommodate thermal expansion and contraction. Additional changes of direction may also be added to the layout to increase the amount of flexibility inherent in a system. By doing so, stresses will be minimized and the distribution of stresses will be better balanced. Directional changes, like loops and offsets, can be positioned in a horizontal or vertical configuration. Like the two-elbow offset, they also can be rotated at any angle. An elbow used in this fashion is sometimes referred to as freely floating.

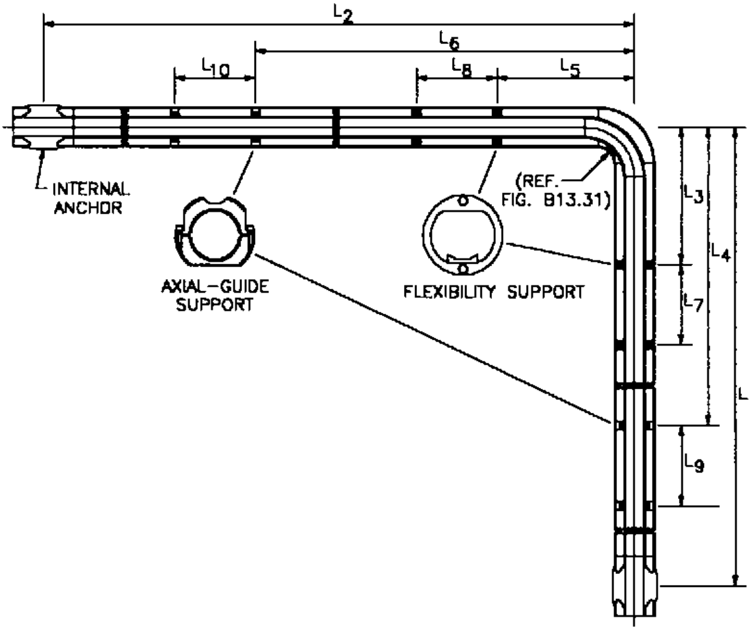

FIGURE B13.74 A patented subassembly of a double containment system incorporating "internal-flexibility" by means of specialized elements that maximize flexibility of the carrier components and minimize stresses and the resulting strains on the subassembly components. The commercially licensed arrangement for thermoplastic systems is sold under the trade name Rionflex™. *(U.S. Patents: 5,482,088, 5,715,587, 5,690,148, 5,452,922, 5,901,753; 5,862,834, 5,197,518; others may apply; further patents pending; Orion Fittings, Inc.)*

Figure B13.74 illustrates the important aspects of a patented directional change assembly designed to accommodate large-magnitude differential expansion and contraction in a double containment piping system.

Two major design considerations are involved when using an elbow to accommodate thermal expansion and contraction. The first involves whether or not an inner elbow will come in contact with its associated outer elbow due to differential movements of the two systems. If they do contact each other, substantial stresses may develop in both primary and secondary containment components, which may lead to a premature double failure. To determine if this is possible, and thus if sufficient space exists, a dimensional analysis must be conducted.

A second major design issue involves the closest point of lateral restraint from the inner or outer elbow. Each elbow that requires movement must have its closest points of lateral restraint on each side far enough away so that adequate flexibility is provided to the elbow. The closest point that will provide lateral restraint to a primary-pipe elbow is where inner and outer components come in contact with each other whenever they are allowed to do so. If a system is designed such that inner and outer component contact is prevented through adequate annular space, the interstitial support that is closest to the elbow on each side will become the point of closest lateral restraint in most applications. There are interstitial supports that do not function as points of lateral restraint in horizontally positioned systems,

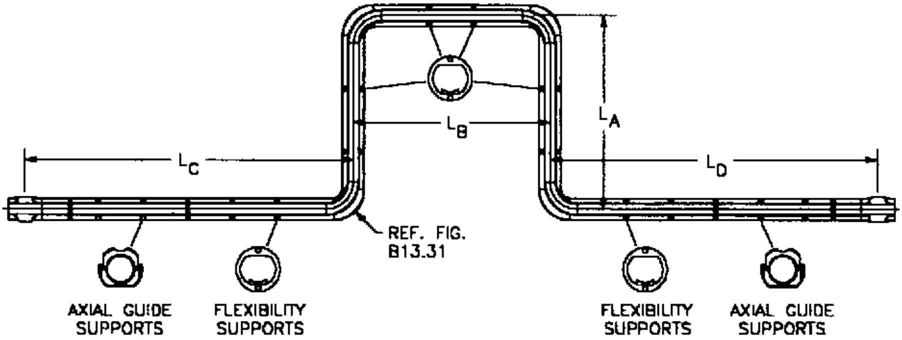

FIGURE B13.75 A patented double containment expansion loop subassembly incorporating ''internal-flexibility'' by means of specialized elements that maximize flexibility of the carrier components and minimize stresses and the resulting strains on the subassembly components. The commercially licensed arrangement for thermoplastic systems is sold under the trade name Rionflex™. *(U.S. Patents: 5,482,088, 5,715,587, 5,690,148, 5,452,922, 5,901,753; 5,862,834, 5,197,518; others may apply; further patents pending; Orion Fittings, Inc.)*

which is referred to as a flexibility support. An example is illustrated in Fig. B13.25 and Fig. B13.26.

The analysis of aboveground secondary containment elbows may be treated similarly to the way that aboveground single-wall-piping elbows are. However, the added rigidity that interstitial supports provide, in terms of adding resistance to bending, must be included in any design. If a system is permanently and rigidly interconnected with frequency (i.e., a simultaneously fused system or a restrained-fitting RTRP system), there will be greatly added resistance to bending for the secondary containment elbows. Underground, direct-buried piping is substantially restrained from moving in most cases.

Expansion Loop Design for Double Containment Pipes. Where other methods are not suitable, expansion loops offer an alternative method to compensate for thermal expansion and contraction. Loops may be positioned vertically or horizontally and may vary in configuration. They may be used in horizontal or vertical piping sections. One conventional approach for calculating the size of an expansion loop in a single-walled pipe is by using the guided-cantilever-beam theory. This approach assumes that piping demonstrates substantial elasticity and assumes limited piping rotation of the ends of each straight run. It also assumes that the loop consists of two cantilever beams, each with one end fixed and concentrated loads applied at their free ends. Figure B13.75 shows a standard four-elbow 90°-expansion loop in a double containment piping system. Figure B13.76 illustrates an expansion loop assembly involving four 45° elbows.

Expansion Offset Design for Double Containment Piping. An expansion offset assembly is very similar to an expansion loop. The design requires the same general rules applied to expansion loop design sizing. Expansion offsets can also be positioned in either a horizontal or vertical configuration. The conventional method for calculating the size of expansion offsets in a single-walled pipe is by the use of the guided-cantilever-beam theory. This approach assumes that the piping demonstrates substantial elasticity and assumes the ends of the pipe are restrained against rotation. It also assumes that a pipe offset behaves as a cantilever beam, with one end fixed

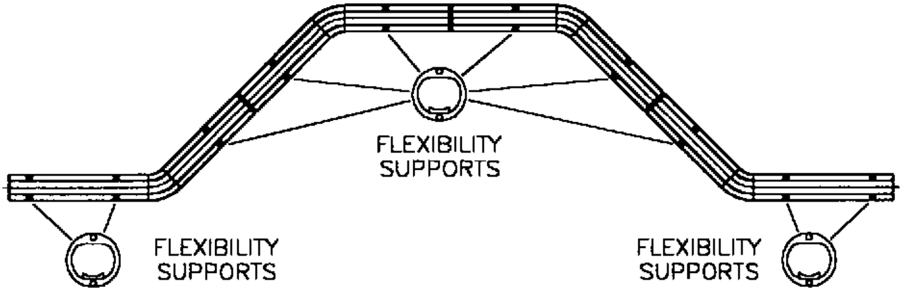
FLEXIBILITY SUPPORTS
FLEXIBILITY SUPPORTS
FLEXIBILITY SUPPORTS

FIGURE B13.76 Variation of the patented expansion loop subassembly shown in Figure B13.77 whereby 45° elbows are used in place of 90° elbows to minimize horizontal laying width. This type of arrangement is often preferred for gravity-drain systems. The commercially licensed arrangement for thermoplastic systems is sold under the trade name Rionflex™. *(U.S. Patents: 5,482,088, 5,715,587, 5,690,148, 5,452,922, 5,901,753; 5,862,834, 5,197,518; others may apply; further patents pending; Orion Fittings, Inc.)*

and a concentrated load applied at its free end. Figure B13.77 illustrates an example of an expansion offset in a double containment piping system.

Installation-Related Layout Issues for Nonpressure and Pressure Piping Systems

Types of Secondary Closures and Their Locations. Secondary closures consist of closures that are used to seal gaps remaining in a secondary containment piping system assembled using a staggered joining sequence in order to complete a contain-

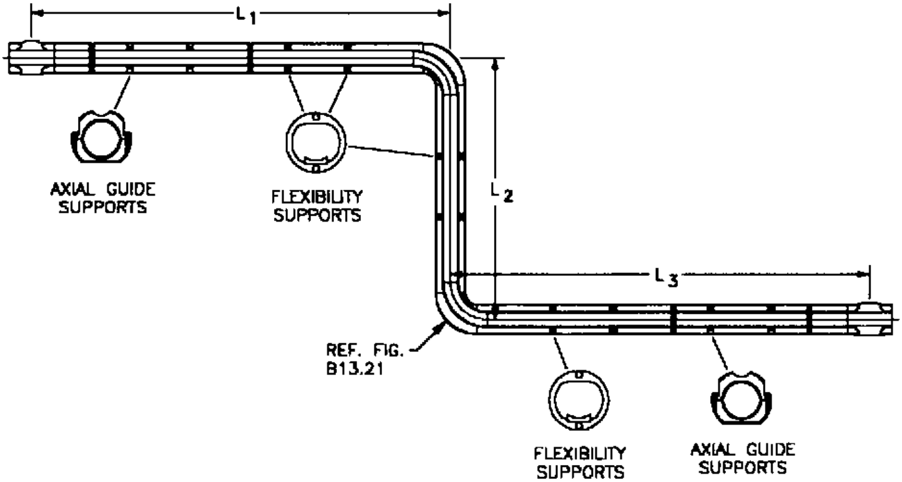
L1
L2
L3
AXIAL GUIDE SUPPORTS
FLEXIBILITY SUPPORTS
REF. FIG. B13.21
FLEXIBILITY SUPPORTS
AXIAL GUIDE SUPPORTS

FIGURE B13.77 An example of a Z-bend offset subassembly of a double containment system incorporating "internal-flexibility" by means of specialized elements that maximize flexibility of the carrier components and minimize stresses and the resulting strains on the subassembly components. The commercially licensed arrangement for thermoplastic systems is sold under the trade name Rionflex™. *(U.S. Patents: 5,482,088, 5,715,587, 5,690,148, 5,452,922, 5,901,753; 5,862,834, 5,197,518; others may apply; further patents pending; Orion Fittings, Inc.)*

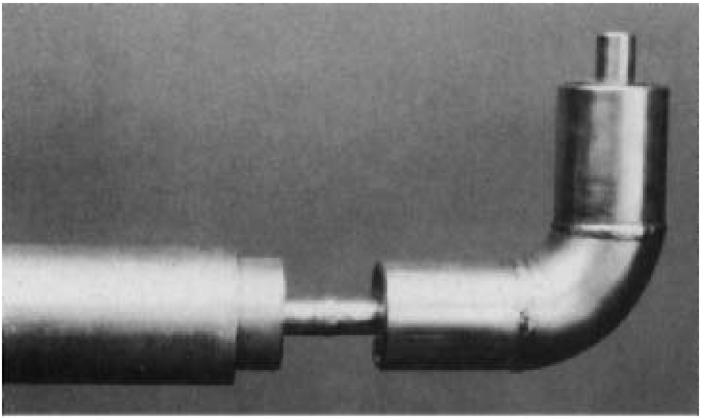

FIGURE B13.78a Illustration of a gap in a double-containment pipe. *(Source: Guardian division of Eslon Thermoplastics, Inc.)*

ment casing. Many secondary closure methods exist; however, they may be divided into two basic types: end-type closures (terminations) and midline closures.

End closures are described earlier in this chapter; midline-type secondary closures are discussed here. Midline closures are required whenever a gap exists either in a straight pipe section or in a secondary containment fitting. They are applicable mainly to systems where staggered welding is used as the sequence for joining and whenever sections are prefabricated. A gap in straight pipe section of a secondary containment pipe requiring a midline secondary closure is illustrated in Fig. B13.78. This type of gap exists for systems that use a staggered joining sequence.

There are a many options to complete containment casings where such a gap

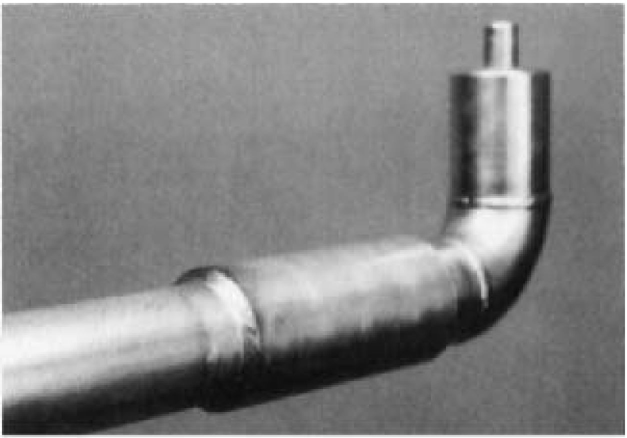

FIGURE B13.78b Shown here is the tubular slip-coupling after it is telescoped into position and welded on both ends to close the gap. *(Guardian Division of Eslon Thermoplastics, Inc.)*

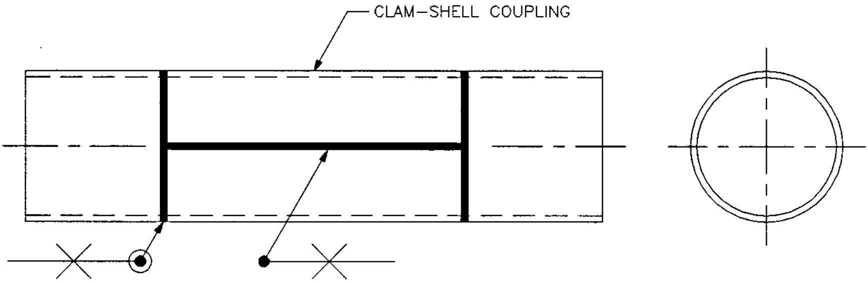

FIGURE B13.79 Cross-sectional view of an assembled clam-shell coupling.

exists in straight pipe sections. Four basic welded (bonded) types include: (1) split-pipe sections or *clam-shell* couplings, (2) weld wraps, (3) sheet wraps, and (4) slip couplings. These four types are illustrated in their as-installed condition, designed to close a midline gap, in Figs. B13.79 through B13.82. Figure B13.83 is a photograph of a slip coupling being installed into an 8-in (200 mm) nominal-diameter secondary containment polyolefin pipe.

When secondary fittings are manufactured in two halves as clam-shell fittings, they can also serve as the point of closure in the jacket in lieu of, or in-addition to, having gaps in the straight pipe sections. Examples of fiberglass clam-shell fittings are shown in Fig. B13.84.

Simultaneous Fusion

An alternative sequence of constructing a double containment piping assembly is termed *simultaneous fusion* and pertains only to systems composed of thermoplastic piping inner and outer components. Simultaneous fusion is most readily applied to heat-element-based butt-fusion-based thermoplastic systems due to the ability to

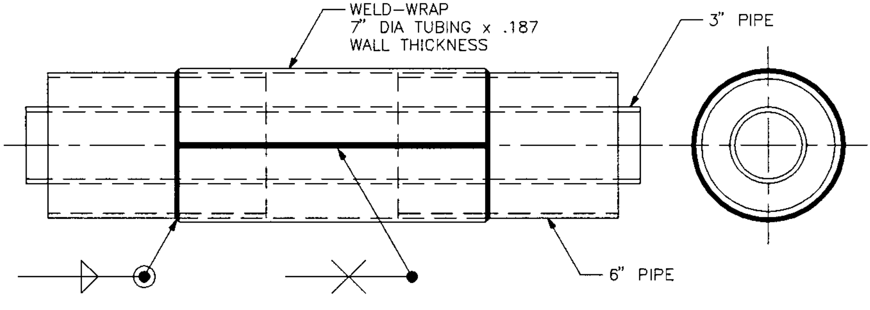

FIGURE B13.80 Cross-sectional view of a weld-wrap assembly.

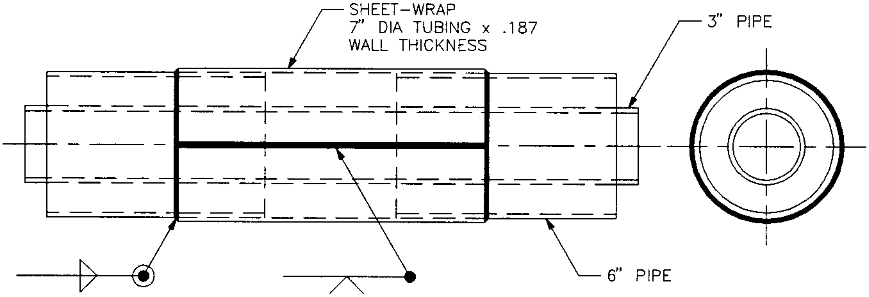

FIGURE B13.81 Cross-sectional view of an assembled sheet wrap.

combine primary and secondary containment pipe sizes that are relatively close in diameter. The method can also be applied to small-diameter heat-element-based socket-fusion systems and solvent-cement-based socket systems. However, the necessary tools are not readily available, and if they were, it would be difficult to get them.

The object of any simultaneous fusion system is to prepare both primary and secondary containment components so that they are permanently fixed to each other and can thus be joined to a mating set of components. In some systems, simultaneous fusion can be used to join 100 percent of all components involved in the piping system. It can also be selectively used for situations where staggered welding is the primary method, in lieu of using secondary closures. Simultaneous fusion can substantially reduce overall labor involved on a project, unless primary piping joints leak upon initial pressure test. However, the inspection of primary welds is substantially limited, and the method is best suited for applications where a flexible (unrestrained) layout is not required. A simultaneously welded system will typically result in a structurally more rigid assembly.

Simultaneous fusion is more easily applied to systems that have identical primary and secondary containment materials. If a heat-element butt-fusion-based system is used, the materials should have a welding temperature range that overlaps and specific welding pressures that are nearly the same.

The procedure for simultaneous fusion is illustrated in Figs. B13.85a through

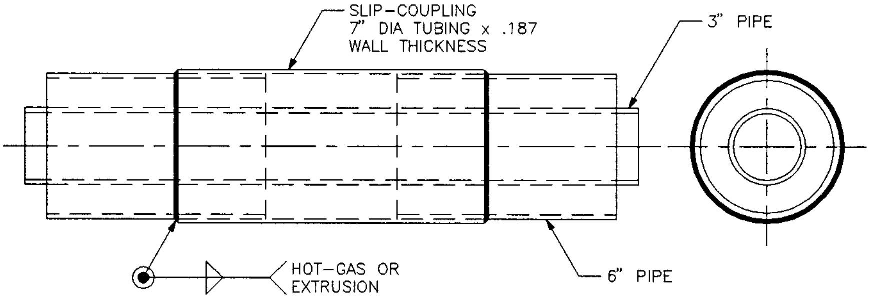

FIGURE B13.82 Cross-sectional view of an assembled slip-coupling.

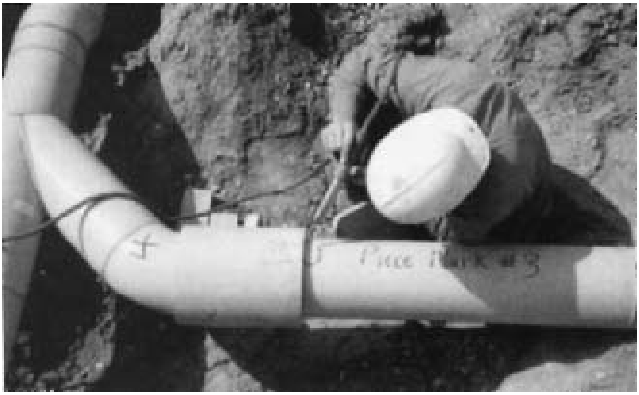

FIGURE B13.83 A tubular slip-coupling is bonded to the secondary containment coupling using hot-air welding in a thermoplastic double containment piping system. *(Grewe Plastics)*

B13.85l. The single most important consideration in performing simultaneous fusion is that the components should be prefabricated so that they align on the same plane at their ends; the alignment must occur within very close tolerances ($< 5\%$ of diameter). The standards according to DIN, and accepted worldwide, requires that thermoplastic butt-fusion pipes be aligned to within 10 percent of their wall thicknesses in terms of their diametrical alignment. Therefore, the use of thick-walled pipes (SDR 17.6 or thicker) as the material of the primary pipes for primary pipes 8-in nominal diameter (approximately 200 mm ISO 161/1 outside diameter) and below is highly recommended.

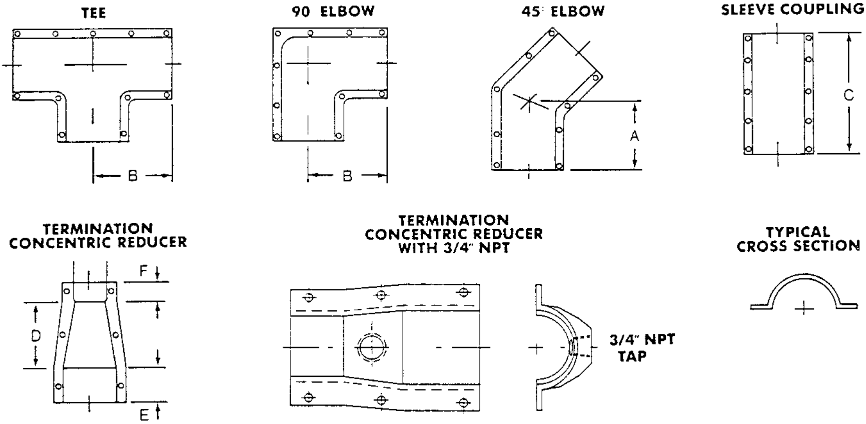
TEE
B
90 ELBOW
B
45° ELBOW
A
SLEEVE COUPLING
C
TERMINATION CONCENTRIC REDUCER
F
D
E
TERMINATION CONCENTRIC REDUCER WITH 3/4" NPT
3/4" NPT TAP
TYPICAL CROSS SECTION

FIGURE B13.84 Example of typical RTRP "clamshell" couplings and fittings. *(Smith Fiberglass Products Co.)*

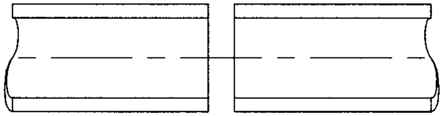

FIGURE B13.85a Position the primary pipes in place.

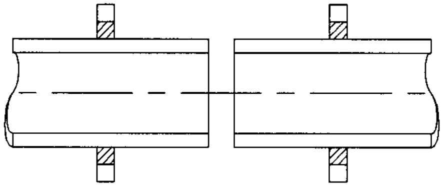

FIGURE B13.85b Position the interstitial centering supports in place approximately one inch from the end of the primary pipe.

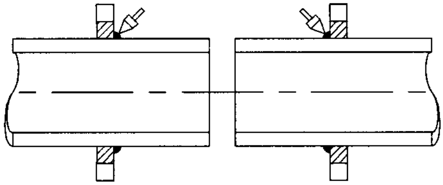

FIGURE B13.85c Weld the interstitial supports to the exterior of the primary pipe.

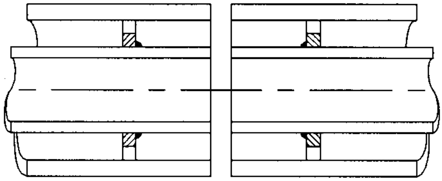

FIGURE B13.85d Slip the secondary pipe over the primary pipe interstitial supports.

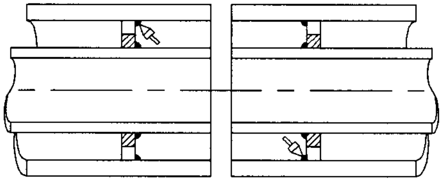

FIGURE B13.85e Weld the interstitial supports to the D of the secondary-containment pipe.

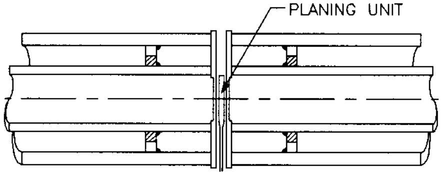
PLANING UNIT

FIGURE B13.85f Plane the ends of the pipes to be sure that they are parallel and to expose a clean surface for welding.

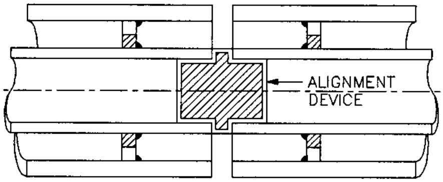
ALIGNMENT DEVICE

FIGURE B13.85g Check the alignment of the primary pipe after planing.

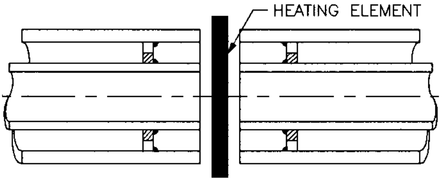
HEATING ELEMENT

FIGURE B13.85h Position the heating element in place.

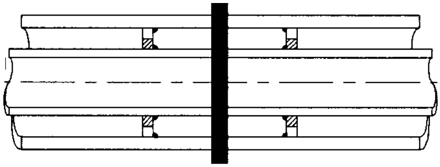

FIGURE B13.85i Bring the pipes up to the heating element under the specified initial weld pressure.

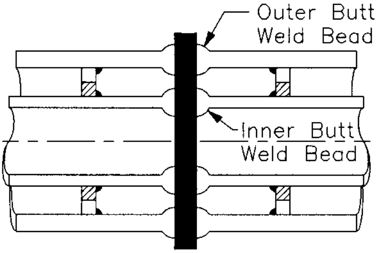

FIGURE B13.85j Allow the pipes to heat up for the required heating duration.

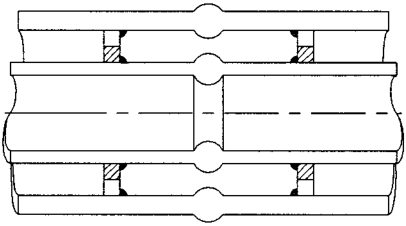

FIGURE B13.85k Remove the heater plate and bring the pipes together using the specified final weld pressure.

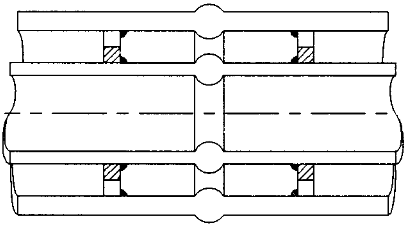

FIGURE B13.85l The illustration shows the final appearance of the joint section.

Secondary Containment of Valves in Double Containment Piping Systems

Valves present unique layout concerns for double containment piping systems. By their nature, they are designed to be operating mechanical devices. Their operation can be either by manual or some automatic means (i.e., pneumatic or electrical operation). Either way, they require a considerable degree of access for either operation or maintenance purposes. Various valve types commonly encountered in chemical piping are discussed in this section, along with their associated layout alternatives.

Wherever possible, valve use should be maintained outside zones of pressurized secondary containment. By maintaining valves and other high-maintenance-operating mechanical items outside zones of secondary containment, added system complexity may be avoided. Whenever a valve must be added to a primary pipe system that is required to have pressurized secondary containment, there will be added expense. The added expense arises from the need to contain the valve in such a manner so as to enable ready access to its secondary containment housing, yet maintain its containment in a pressure-tight manner between times when access is required. Since valves are common sources of leaks and vapor emissions, additional and frequent maintenance of a double containment piping system will be required due to the increase in detected leaks. Thus it is much simpler and more cost effective to maintain a primary-pipe-system valve outside a zone of pressurized secondary containment.

Valves may still be secondarily contained; they just cannot be easily and inexpensively housed and still meet the necessary requirements. A common way to provide containment for such a valve is by the use of a lined or coated concrete dike, berm, or building floor in an aboveground application and by the use of a lined or coated concrete sump or accessible manhole in an underground application.

Valves may also be required as part of the secondary containment piping system (i.e., vent and drain valves, leak-detection and instrumentation isolation valves, etc.). These valves are usually small diameter (< 2 in, 63 mm) and of the quarter-turn (on-off) variety. They are usually not required to be contained; however, as part of an underground system, they must be positioned inside a concrete housing (which does not normally have to be lined) in order to be accessed and operated and to prevent their being directly buried.

Multiple Primary Pipe and Common Secondary Containment Pipe Systems

Multiple primary pipe systems (housed within a common secondary containment pipe) present additional layout complications beyond the ordinary complications discussed in this chapter for a single-walled pipe within a single secondary containment pipe. Many of the complications arise from the increased importance of the orientation of the primary pipes within the common secondary containment pipe. In such systems, the following factors have to be well thought out: (1) secondary containment sections must be initiated; (2) primary pipes have to follow bends; (3) in some systems they pick up branches along the way; and (4) secondary containment sections are eventually terminated. Throughout a system of this type, the pipes must maintain their relative positions within the cross-sectional plane.

Multiple pipe systems by their nature require additional detailed drawings to be prepared, as compared to single primary piping double containment systems. This is due to the fact that there are many more details to consider in order to create a successfully installed system. The details should include enough information to determine the method and spacing of supporting devices, termination and initiation arrangements and parts, welds (bonds) at each of these areas, and any other instructions the fabricator might need. The additional costs of fabrication, engineering, and capital costs of enlarged secondary containment pipes make multiple-pipe systems more expensive than running a series of individually contained primary pipes, in many situations. They also tend to be difficult to repair or modify. Therefore, secondary containment of multiple pipes should only be considered where space is limited. Common secondary containment of underground multiple pipes may be better accomplished with the use of lined tunnels (manways or walkways) or lined trenches. An example of a common secondary containment trench designed to house multiple primary pipes is shown in Fig. B13.67.

Rotation in Multiple Primary Pipe and Common Secondary Containment Pipe Systems. An issue that arises in the design and layout of multiple primary pipe systems is called *rotation.* In rotation of multiple primary pipe systems, the pipes change their relative orientation in the cross section of the bundle after a change in direction. This will occur whenever a vertical pipe directional change occurs, followed by a perpendicular change in direction. This is illustrated in Fig. B13.86. If each of the four lines is followed, it can be noticed that they all change orientation.

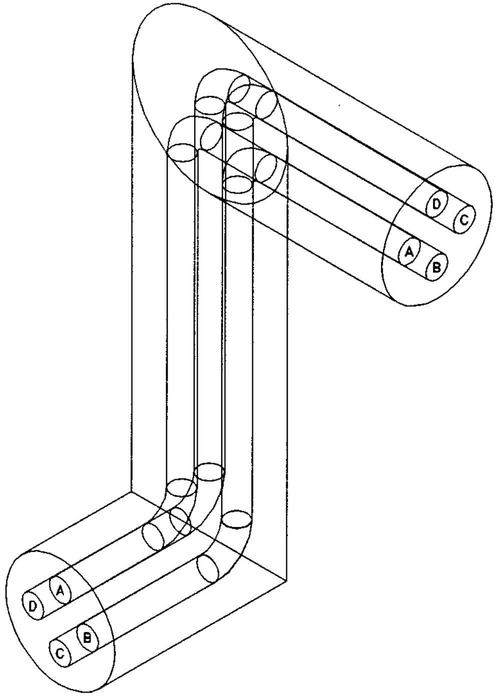

FIGURE B13.86 Example of "rotation" in a multiple carrier pipe system. Note that the relative orientation of "a" through "d" change after undergoing two changes of directions. *(Reprinted with permission from* Chemical Engineering, *Sept. 1991, Copyright 1991, by McGraw-Hill, Inc. with all rights reserved).*

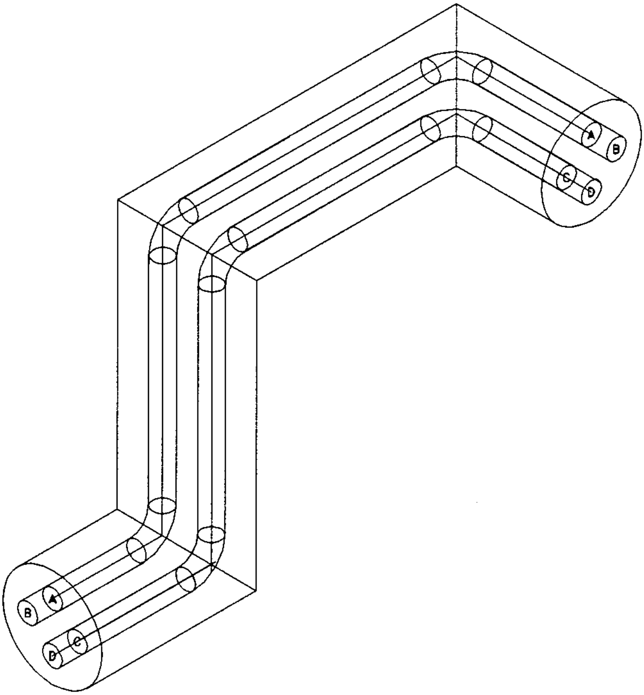

FIGURE B13.87 Rotation in multiple pipe systems can be corrected by the addition of an additional elbow in some circumstances. Note how the overall orientation of (a) through (d) remain the same after the addition of the third elbow. *(Reprinted with permission from* Chemical Engineering, *Sept. 1991, Copyright 1991, by McGraw-Hill, Inc. with all rights reserved).*

Rotation in and of itself is not a bad situation. However, it can be an undesirable feature if the carrier pipes are to maintain their original positions, due to equipment connections, maintaining positions for branch connections, et cetera. To prevent rotation, a third elbow can be added into the system, as illustrated in Fig. B13.87.

LEAK DETECTION METHODS AND REQUIREMENTS

Overview of Leak Detection

Leak detection is one of the most important aspects of double containment piping and double-walled tank systems. Without an effective and reliable means to sense that a leak has occurred, the additional protection otherwise added by means of providing secondary containment may be compromised. Once a fluid leaks into an annulus of a pipe or the interstice of a tank, there is no longer any means to contain the leaked fluid secondarily; only a primary means of containment exists at that point, that is, unless tertiary containment has been incorporated into a system design (e.g., placing the double-walled pipe or tank into a tertiary concrete structure).

Left undetected, a fluid may have a chance to corrode through its secondary containment casing, or may find its way through defects in the containment to the surrounding environment. It is important that a leak be detected as early as possible so that any chance of fluid escaping to the surrounding environment is minimized. A system whose leaks are detected early can be repaired right away and quickly returned to its original safe working condition.

Both single-walled and double containment piping systems may be monitored for leaks by a wide variety of methods. There are likewise numerous methods to detect leaks that originate from single-walled or double-walled tanks and vessels. Both double containment piping and any associated tanks and vessels can be equipped with automatic sensing mechanisms to continuously monitor and activate an alarm as soon as system upset occurs. Alternatively, manual and visual leak detection methods may be incorporated by adding the necessary components into the design of a system. In addition to interstitial monitoring, there are both internal methods and external methods that exist to monitor for leaks, although most of these methods work best for tanks (as opposed to pipes). More than one method of leak detection may be used as a means of redundancy.

The successful implementation of any leak detection system is related to many different aspects of the design and installation of a piping and associated tank system. On any given project, it is essential that leak detection be considered from the conceptual phase of the project. By doing so, any needed design details or installation procedures may be taken into account from the start and carefully coordinated. When a project follows this practice, costly design changes and construction delays or problems can be avoided. The best overall result is achieved when leak-detection decisions are considered from the very start of a project.

Leak Detection Cable Systems

Continuous line-leak–sensing and locating systems, commonly referred to as *leak detection cable,* have been installed in many double-containment piping systems. The appeal of leak detection cable is that approximate locations of leaks can be sensed early after a leak occurs. Several types exist, each based upon the continuous measurement of an energy source, thereby monitoring for changes in the energy source behavior. The two most common methods include: (1) conductance (resistance) -based cable systems, whereby the conductance (resistance) of an electrical signal is continuously measured; and (2) impedance-based systems, also referred to as TDR (time-domain-reflectometry) systems, whereby the impedance of an energy pulse wavelength is continuously monitored against a set pattern to detect changes. Each has subtle differences and capabilities; both are capable of performing their desired functions, namely, determining the approximate location of a leak and alarming a user as to its existence.

In one type of conductance-based cable, which is intended to sense conductive fluids, an electrical current is short circuited when a fluid bridges a gap between sensor and signal wires. Resistance monitoring is a straight-forward concept that applies Ohm's law to determine the location of a short. It is a method that can immediately sense small leaks, even over relatively long lengths of cable. Thus it has relatively sensitive reporting capabilities and is a well-proved technology. Unless condensation is eliminated or controlled, versions of conductivity-based cable which is designed to detect conductive fluids will report false leak signals due to its sensitivity.

Impedance-based (TDR) leak-detection cable technology is based on the measurement of the impedance of an energy pulse and is similar in concept to radar technology. It has the subtle advantage of locating multiple leaks if a prior leak is of small magnitude and confined to a local area. Impedance-based systems compare favorably with conductance-based systems, although impedance methods lack some of the precision inherent in resistance-based methods. This is particularly true if a leak occurs at the far end of a long length of cable.

Thus, both types of cable technologies have subtle differences that could prove useful for a given design condition. For instance, it was mentioned that conductance-based cables have the ability to detect very small leaks (some are capable of signaling a leak with < 0.25 in of cable length wetted, when fully immersed), thereby aiding in early detection of a leak. The ability to detect a leak early can help to limit the total quantity of a leak (release). Accordingly, the amount of work to repair a piping system could be kept to a smaller scope. If a leak were to remain undetected for a longer time, there is greater potential for more work to be involved in the repair of the system.

A unique feature of TDR-based technology is the ability to detect multiple leaks. This feature is interesting, but there are limited applications where it is of benefit. To continue to operate a double containment piping system once a leak has been detected is a somewhat self-defeating practice for the concept of double containment. Good operating practices suggest that a system be immediately repaired upon the detection of a leak. In fact, RCRA requirements in the United States would not allow a user to continue to operate a regulated system once an initial leak has been detected.

In order for a TDR-based cable to detect a second leak once the first has occurred, the system must map over the first leak. When this occurs, the cable sensing system is subject to a signal-attenuation effect, which will lead to a reduced sensitivity. Figure B13.88 graphically shows this effect, based upon a first leak at 150 ft down a TDR cable's length. The sensitivity of the TDR cable, as measured by an amount of wetted cable required to create an alarm condition, depends on the magnitude of the mapped-over leak, as shown in Fig. B13.88. However, it also depends on the distance of the first leak from the source of the signal. Sensitivity values will improve for TDR-based sensor cables exposed to fluids at less than the effective range; alternatively stated, this also means that sensitivity will lessen as cables are exposed to fluids at greater than the effective range.

Leaks that occur in a near-simultaneous manner could be detected using mapping-over techniques in a TDR-based system. However, it is very rare for multiple leaks to occur simultaneously once hydrostatic testing has been concluded. The time when multiple leaks may be reasonably expected to occur is during an initial primary-pipe hydrostatic test. Thus, having a cable of this type in place during initial pressure testing might be desirable. However, cable systems are not recommended to be installed prior to, or during, a hydrostatic-pressure test, according to manufacturers of both resistance-based and TDR-based sensing cables. Pull cable should always be installed first and left in place during pressure testing. Only upon completion of all testing should actual cable be installed. Thus, the ability to detect multiple leaks is of little real benefit.

Another difference between the two cable technologies involves their sensitivity in detecting a first leak, in relation to their overall length. For resistance-based systems, sensitivity is nearly constant over the full length of a cable, even for very long lengths (> 1000 ft). Sensitivities of TDR-based cables do vary according to

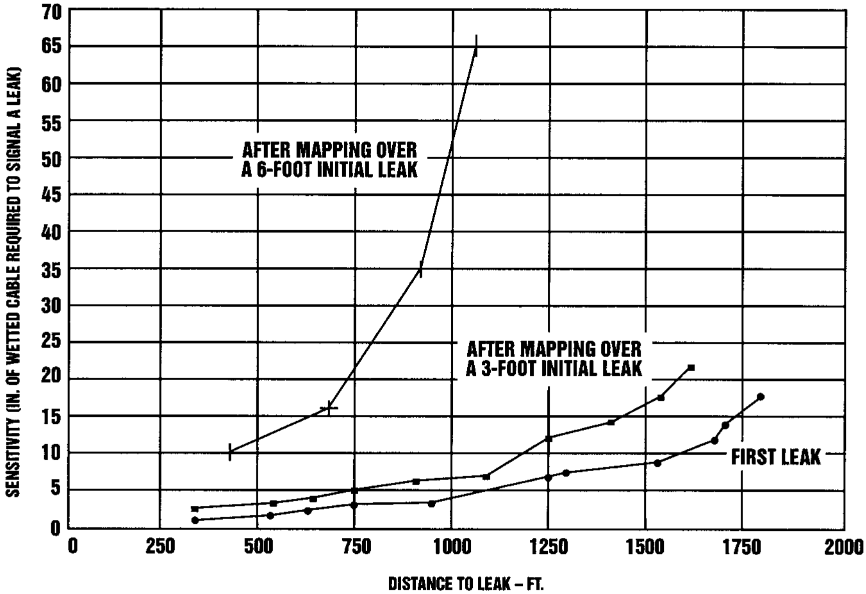

FIGURE B13.88 Response of a typical TDR-based cable to a second leak, based upon a first leak that occurs 150 ft away. Data is shown for a leak that spreads 3 ft, and for one that spreads 6 ft. First leak data is shown for comparison. *(Source: Based on test data supplied by Raychem Corp.)*

length, however. The farther down the length of cable, the greater the wetted length of cable required to create an alarm condition, due to signal attenuation. For a long pipeline (>1000 ft), this effect can be significant, as illustrated by Fig. B13.89.

Both resistance-based and TDR-based cable sensing systems claim an accuracy in detecting leak location to within plus or minus 1 percent of the total cable length, or 5 ft, whichever is greater. Accuracy of leak location is functionally different from cable sensitivity. In assessing the performance capability of a leak detection cable system, one needs to consider both the claimed accuracy and the sensitivity of the cable to obtain a complete picture.

Installation of leak detection cable requires carefully planned coordination with other aspects of the piping system installation or associated tanks. It also requires that close inspection and control practices be followed during an installation. These functions can either be provided by outside inspectors or by the installers of the cable systems, provided they receive adequate training. Each detail must be carefully considered, both in the engineering design and during the installation process. Detailed requirements should be clearly described in project plans and specifications.

Leak Detection Cable System Component Detail. There are many individual components that collectively make up a continuous sensing cable system. The exact design of components varies by manufacturer, and not all systems require the same type of components. For instance, some cable manufacturers do not use connectors to install straight lengths of cable. Instead, they use continuous cable spliced together

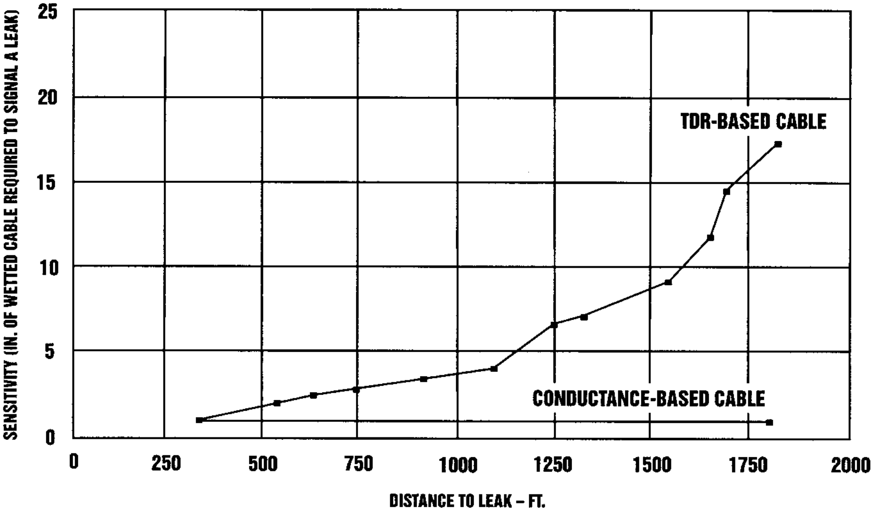

FIGURE B13.89 Sensitivity of a typical TDR-based cable based on the length down the cable where a leak occurs. *(Source: Based on test data supplied by Raychem Corp.)*

at the ends. Examples of a variety of cable constructions are illustrated in Fig. B13.90 and Fig. B13.91.

The major components that may be encountered in any leak-detection cable system, aside from the alarm panel, consist of: (1) cable, (2) jumper cable, (3) jumper feedthrough fitting, (4) feedthrough assembly, (5) branch connector, and (6) termination device. All cable systems utilize cable, jumper cable, and some type of jumper feedthrough fitting. However, the actual design of the components varies considerably from manufacturer to manufacturer.

Probe Monitoring Systems

Leak detection may be effectively provided by dividing a double containment piping system's annulus into separate, isolated leak detection compartments. Each compartment may then be monitored with some form of probe measuring device. The types of probes typically used include: (1) liquid level sensing, (2) moisture detection, (3) vapor detection, (4) conductivity and resistivity, (5) pH measurement, (6) pressure sensing, (7) flow measurement (primary piping), (8) density measurement, (9) wavelengths (light, radar, and sonar), (10) motion detection, and (11) others. While providing compartments in an annulus may be

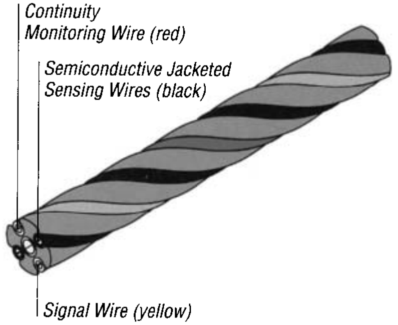
Continuity Monitoring Wire (red)
Semiconductive Jacketed Sensing Wires (black)
Signal Wire (yellow)

FIGURE B13.90a Example of the construction of a typical conductance-based leak-detection cable, which is specific to conductive fluids. *(Source: Raychem Corp.)*

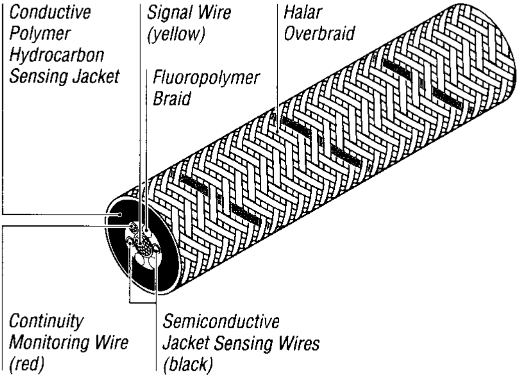
Conductive Polymer Hydrocarbon Sensing Jacket
Signal Wire (yellow)
Fluoropolymer Braid
Halar Overbraid
Continuity Monitoring Wire (red)
Semiconductive Jacket Sensing Wires (black)

Sensing cables are specifically designed to detect either aqueous or hydrocarbon-based liquids. A unique branching connector lets locating systems follow complex, branching pipelines.

FIGURE B13.90b Example of the construction of a typical conductance-based leak-detection cable that is specific to nonconductive fluids. *(Source: Raychem Corp.)*

the most efficient means of incorporating a point probe–based detection system, it is not the only approach. Point-probe systems may also be used in a system designed with a continuous annulus, although the ability to locate a leak reasonably is significantly less.

Normally, probes are housed within a branch outlet, or reducing-branch outlet, which is provided in the secondary containment pipe. Examples of possible arrangements are shown in Figs. B13.92 and B13.93. Such arrangements often function as a means to house a probe, in addition to functioning as a combination low-point drain (high-point vent) and manual detection point. Normally, probe systems are

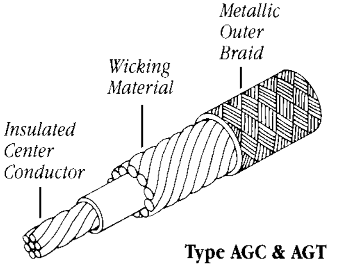
Metallic Outer Braid
Wicking Material
Insulated Center Conductor
Type AGC & AGT

FIGURE B13.91a Example of the construction of a TDR-based cable designed to detect corrosive chemicals. *(Source: Midwesco)*

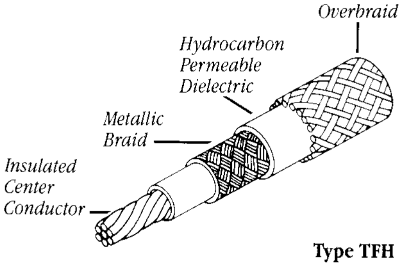
Overbraid
Hydrocarbon Permeable Dielectric
Metallic Braid
Insulated Center Conductor
Type TFH

FIGURE B13.91b Example of the construction of a TDR-based cable designed to detect hydrocarbons. *(Source: Midwesco)*

more readily applied to aboveground systems. In underground systems, probes can be attached at manhole locations using the branch arrangement illustrated in Fig. B13.93, immediately after piping-manhole penetration.

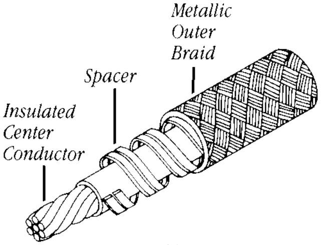

FIGURE B13.91c Example of the construction of a TDR-based cable designed to detect water and hydrocarbon fluids in addition to steam and hot water up to 400°F. *(Source: Midwesco)*

Liquid Level Sensing. Detection of a fixed level of liquid is among the simplest probe systems to design and implement in a double containment piping system. A liquid level system will function in a very reliable manner to detect leaks. However, it will not distinguish between water (including groundwater or condensate) and service fluids. In this type of system it is important to have a pressure-tight annulus and to eliminate condensation by providing a moisture-free inert gas in the annulus (both items are important for most methods of sensing leaks). A liquid level detection system can be implemented by installing a liquid level measuring device in a vertically positioned dropleg branch, as shown in Figs. B13.92 and B13.93, or in low-point sumps such as those shown in Figs. B13.94 through B13.97.

A liquid level probe (or probes) may be connected to an alarm panel that signals an alarm when a specified level of liquid is detected. The system is good for establishing a leak in a certain zone of an annulus. It will not allow the source of a leak to be specifically identified within a leak zone, however. Also, it is not designed to detect small leaks quickly caused by a spraying but will rapidly respond to major leaks. A liquid level sensing system may be coupled with other types of probes to distinguish between types of fluids, resulting in a very effective overall approach to detecting leaks.

Moisture Detection. Moisture probes are useful for detecting the presence of groundwater or service fluids that have a high water content. There is a wide variety of types of probes available; the sensitivities of available probes vary widely. The

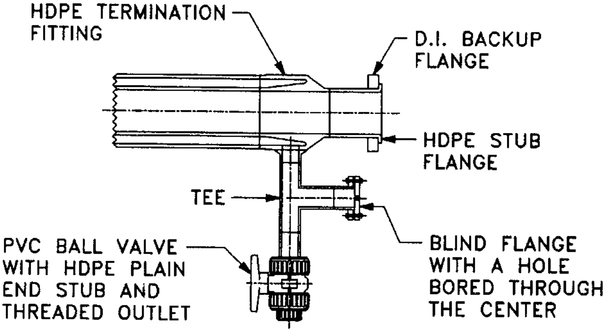
HDPE TERMINATION FITTING
D.I. BACKUP FLANGE
HDPE STUB FLANGE
TEE
PVC BALL VALVE WITH HDPE PLAIN END STUB AND THREADED OUTLET
BLIND FLANGE WITH A HOLE BORED THROUGH THE CENTER

FIGURE B13.92 Illustration of a downward-positioned probe attachment for a horizontally mounted liquid-level sensor future attachment.

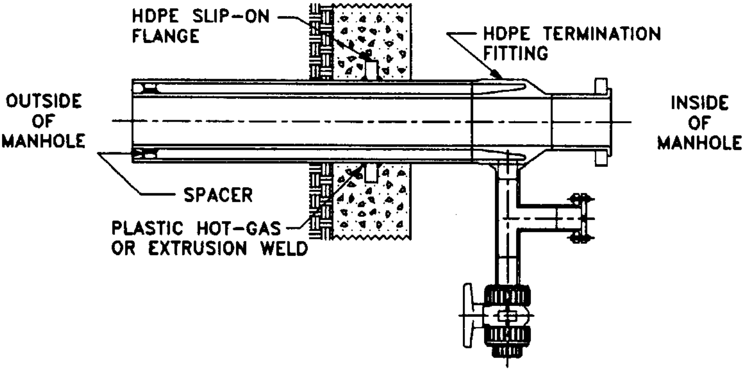
HDPE SLIP-ON FLANGE
HDPE TERMINATION FITTING
OUTSIDE OF MANHOLE
INSIDE OF MANHOLE
SPACER
PLASTIC HOT-GAS OR EXTRUSION WELD

FIGURE B13.93 Illustration of a probe attachment in a manhole location.

wide range of moisture probe styles available allows a system designer to select a customized system designed for a specific application.

A moisture probe system can be implemented by installing a moisture measuring device in a vertically positioned drop-leg branch. A branch for a probe of this type need not be at the 6 o'clock position of an annulus. Most sensitive probes can be positioned at the 12 o'clock position of an annulus, since they detect fine vapors.

A moisture probe (or probes) may be connected to an alarm panel that signals

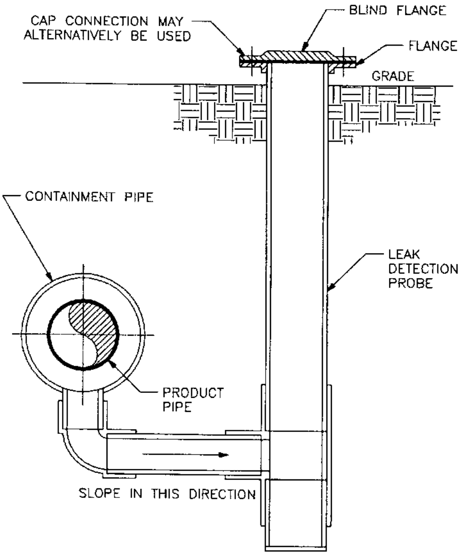
CAP CONNECTION MAY ALTERNATIVELY BE USED
BLIND FLANGE
FLANGE
GRADE
CONTAINMENT PIPE
LEAK DETECTION PROBE
PRODUCT PIPE
SLOPE IN THIS DIRECTION

FIGURE B13.94 Illustration of a typical underground vertical leak detection probe sump. *(Orion Fittings, Inc.)*

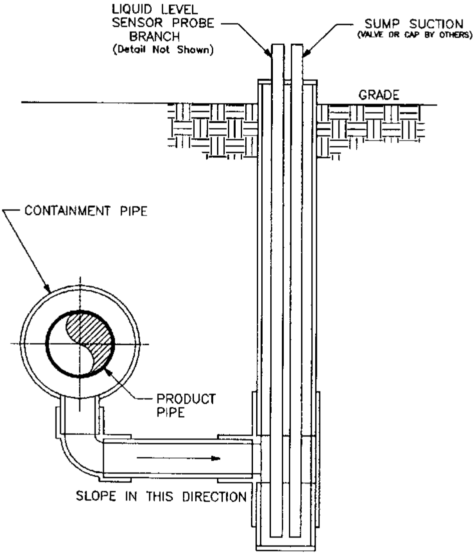
LIQUID LEVEL SENSOR PROBE BRANCH (Detail Not Shown)
SUMP SUCTION (VALVE OR CAP BY OTHERS)
GRADE
CONTAINMENT PIPE
PRODUCT PIPE
SLOPE IN THIS DIRECTION

FIGURE B13.95 Example of a low-point leak detection sump in a plastic gravity drain system. *(From* "Handbook of Double Containment Piping Systems," *C. Ziu, McGraw-Hill, New York, 1995.)*

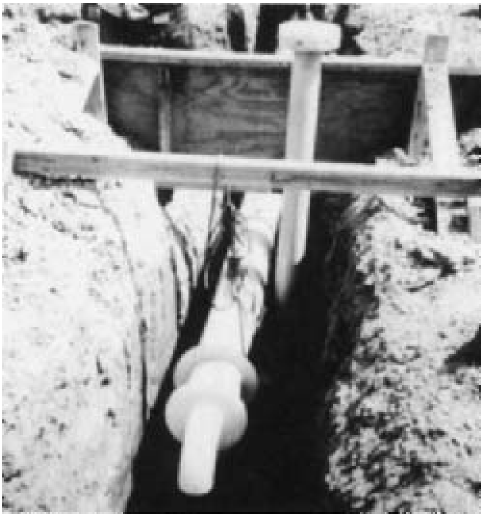

FIGURE B13.96 Example of a low-point leak-detection sump in a plastic gravity drain system.

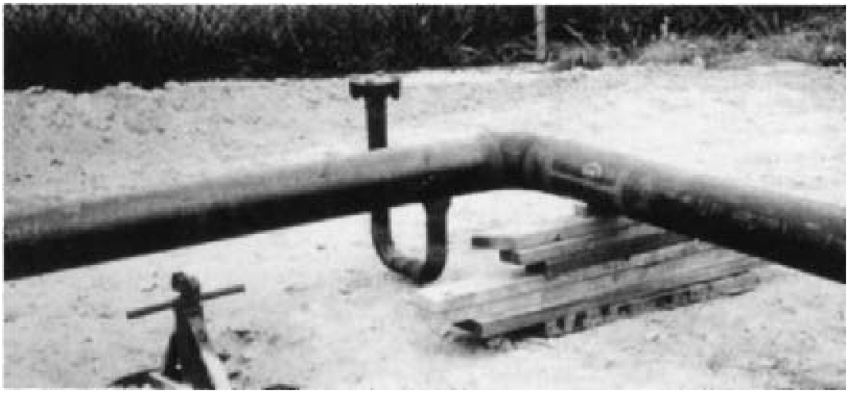

FIGURE B13.97 Example of a low-point leak-detection sump in a metallic fuel oil system.

when a change in moisture content of the annular space is detected. Such a system is good for verifying that a leak of a primary service fluid has occurred in a certain zone of the annulus. It will not allow the position of a leak to be specifically located within a leak zone. However, it can be good for detecting small leaks if the probe used is highly sensitive.

Vapor Detection. Vapor detection systems are very similar to moisture detection systems, except that vapor probes detect volatile chemicals other than water. This type of probe is normally designed to detect fluids that have high vapor pressures, including organic chemicals, halogens, and other chemicals that are relatively volatile. There are many types of vapor probes available with varying values of sensitivity. The type of organic chemical being carried in a primary piping system will determine the type of probe that should be selected for any given application. The sensitivity of the probe to be selected is based upon the type of leak to be detected (e.g., small leak versus major leak), although most vapor probes tend to be highly sensitive compared to other forms of leak detection. When an earlier response is desired, a probe that has a greater sensitivity is desirable.

Conductivity (Resistivity) Measurement. The conductivity or resistivity of an annular space can be measured to detect whether a leak has occurred. This type of probe measurement system is most effectively used in conjunction with a liquid level or pressure sensing system as a means of classifying the type of fluid being sensed. In such an arrangement, liquid-level or pressure monitoring may be used as the primary system to detect the presence of fluids. The conductivity (resistivity) probe will then help to distinguish between water from groundwater or condensation and the service fluid (which must be of the conductive type), based on a change in conductivity. Conductive fluids include such fluids as acids, bases, salts, other organic chemicals, and a host of polar and semipolar organic solvents. Conductivity probes have also been used as the sole means of detection for double containment piping systems.

Conductivity probe systems can be incorporated into a double containment pipe annulus by installing a conductivity measuring device in a vertically positioned drop-leg branch or low point sump. The probe (or probes) may then be connected to a computer or recording device to record the conductivity continually, or may be directly connected to an audio alarm. Monitoring conductivity is good for identifying the fluid that has leaked but can also be used as the sole means to sense for leaks. Conductivity probes can detect small leaks in addition to major leaks. In a very general sense, leak detection cable is a form of conductivity (resistivity) probe. This is not the primary purpose of leak detection cable, but it has been used in this manner. Therefore, a short section of leak detection cable could theoretically be used as part of a point sensing approach.

pH Probes. A pH measurement probe functions in much the same way as a conductivity (resistivity) measurement system. However, pH measurement is limited to detection of acids or bases as only this type of chemical can be measured in terms of pH. Since pH measuring devices are mostly designed to function in a wetted capacity, they normally are used as a secondary means of detection, in combination with some other type of probe. A pH probe system can be implemented by installing a pH measuring device in a vertically positioned drop-leg branch or low point sump. The probe (or probes) may be connected to an alarm panel that signals when a change in pH is detected. The system is good for classifying whether a leak of a primary service fluid has occurred in a certain annular zone by reporting its pH value. It will not allow a leak's location to be specifically identified within a given leak zone. It is best used in conjunction with some other leak detection method.

Flow Measurement. A change in flow of primary piping may be related to the possibility that a leak has occurred. The means for accomplishing flow monitoring is to place a flow measuring device at the beginning and end of the piping system. If the flow of the primary pipe changes by more than a set amount, an alarm can be sounded. This method is good for detecting large leaks. However, it may not detect a fine spraying of fluid, such as would initially occur in a ductile material that is subject to stress cracking (e. g., polypropylene). Flow measurement can be very effective when used in conjunction with other methods.

Pressure Sensing. The pressure of an annular space can be measured to determine changes in pressure. A pressure change can be used to determine whether primary or secondary containment has been breached, making it a very useful form of monitoring. The value and sign of the pressure change depend on the relative pressures of the annular space, the primary (core) pipe, and the pressure of the surrounding local atmosphere. For pressurized primary piping systems, a failure of the primary piping systems can be detected by a pressure rise in its annular space (assuming the annular space is maintained under a lower pressure than its primary pipe). In pressure piping systems where a positive pressure is maintained in its annular space, at an intermediate pressure between the primary pressure and the external environment, a drop in annular pressure will reflect a failure (breach) of the secondary containment system.

For drainage systems that maintain an annular space under a positive pressure, a pressure drop can signal a leak in the primary piping. However, a pressure drop in this type of system could also mean that the secondary containment has been breached. Therefore, a further investigation has to be made, unless a separate probe is added to provide additional information as to the origin of the leak.

Gas that is maintained under a low pressure tends to find its way out of threads, valve seals, et cetera over a period of time. Therefore, some loss of gas could occasionally be expected from secondary containment threaded joints, and resulting false (low-point) alarms triggered. This must be taken into account in operational training procedures so that false alarms do not lead to a leak detection system's being ignored.

The pressure of a primary piping system can also be monitored. A substantial drop in primary piping pressure will often mean that a leak has occurred somewhere over its length. This type of approach is useful for detecting large leaks.

The pressure of a double-walled tank's interstitial space can also be measured to determine if changes in pressure of a contained gas or liquid (e.g., brine) occur. The value and sign of the pressure change depend on the relative pressures of the interstitial space, the primary tank, and the pressure of the external atmosphere. Most double-walled tanks are for low-pressure service. Therefore, it may be difficult to distinguish between a breach of primary or a secondary containment of a double-walled tank in most applications.

Manual/Visual Monitoring Methods

Noncontinuous sensing of double containment piping systems includes those methods that do not involve the incorporation of any type of continuous measuring device, or instrument, to the secondary containment piping system. The three main categories of noncontinuous sensing include manual detection, visual detection, and periodic annular pressure monitoring.

Manual detection typically is accomplished by adding valves to a secondary containment piping system at various low points in its annulus. The low-point valves can be occasionally opened to detect the presence of fluids. Such valves are normally positioned on drip legs, usually at each low point and other intermediate points of the double-containment piping system annulus.

Manual leak-detection methods are only effective when used as part of a regular inspection program where the system is routinely inspected. Manual systems serve as a very effective secondary means of leak detection, used in conjunction with any other method or methods. It is usually a built-in feature to most well-designed systems, where appropriate low-point drains are provided.

Visual Detection Methods. Visual detection may be provided in a number of ways. It can be provided for the entire secondary containment piping system or any partial portion. Visual leak detection can be provided by using a transparent material (borosilicate glass, clear PVC, etc.) as the outside piping (and fittings where applicable). A more practical application involves flanging in a short section of clear piping, or providing clear piping or sight glass as part of a secondary containment drip-leg branch. Visual containment can also be provided where an open-ended secondary containment piping system is used, by observing the end of the pipe for fluid leakage. Visual detection is most effectively applied as part of a regular inspection program where the system is routinely inspected. Visual leak detection systems also serve as a very effective secondary means of leak detection, used in combination with any other method.

Periodic Pressure Monitoring. The pressure of an annulus can be occasionally monitored to detect if a leak has occurred. To do so, a pressure gauge (instead of a transducer) must be provided in an annulus in at least one position. A typical connection for providing a pressure gauge in an annulus is illustrated in Fig. B13.98.

It may be desirable for some installations to maintain an inert gas under pressure and monitor the pressure of the gas. In applications involving pressure-rated primary

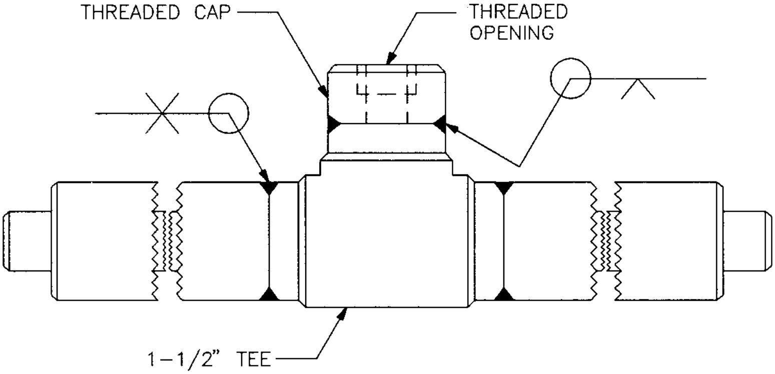

FIGURE B13.98 Illustration of a pressure tap in a secondary-containment pipe for attachment of a pressure gauge.

piping, the annulus does not have to be maintained under a fixed pressure. A rise in pressure will signify that a breach of primary containment has occurred. However, it is not possible to detect a breach of secondary containment in such a system, unless a fixed pressure is maintained in the annulus.

Condensation Effects in Annuli

If air that is warm and relatively humid is introduced into the annulus of a double containment piping system prior to final closure, moisture will condense when the system is subjected to a colder temperature. This often occurs when a system is constructed during the summer season and later subjected to cold winter operating temperatures.

Condensation is a common concern among designers and owners-to-be of double containment piping systems, and for very good reasons. The principal concern rests with the fact that a leak detection system may interpret this action as a false alarm. It does depend to some extent on the sensitivity of the leak detection system selected. However, no leak detection method is immune to this effect, including visual and manual means. Frequent false alarms may subsequently lead to ignoring actual alarms on the part of plant operations personnel, a very dangerous practice, and one that is self-defeating to the system. Also, metal materials could be subjected to various corrosion effects produced by the water (galvanic, pitting, microbiologically induced corrosion, etc.). Therefore, there are many reasons to avoid the possibility of condensation in an annulus.

The solution to the condensation dilemma is a simple and inexpensive one. Replace the original air with a dry or inert atmosphere. Alternatively, a vacuum may be pulled into the annular space, if inner and outer pipe components are mechanically strong enough to withstand vacuum conditions. It has been assumed by many that this is a very involved and expensive activity. However, if an annulus is designed in a leak-tight manner and has been provided with adequate high-point vents and drains, this task will actually be one of the least expensive aspects of the

TABLE B13.1 Minimum Amount of ft^3 of N_2 that Must Be Added to Purge Various 1,000 ft Lengths of Double Containment Piping to Achieve a Dew Point of −20°F (−29°C)

Size	Starting condition		
	90°F (32°C)/90% R.H.	80°F (27°C)/80% R.H.	70°F (21°C)/70% R.H.
1” IPS/2”Sch. 10	1,380	890	550
1” IPS/3”Sch. 40	3,630	2,340	1,450
2” IPS/3”Sch. 10	2,360	1,520	950
2” IPS/4”Sch. 40	4,990	3,220	2,000
3” IPS/4”Sch. 10	5,790	3,730	2,320
3” IPS/6”Sch. 40	11,590	7,460	4,650
4” IPS/6”Sch. 10	9,530	6,130	3,820
4” IPS/8”Sch. 40	20,530	13,220	8,230
6” IPS/8”Sch. 10	12,040	7,750	4,830
6” IPS/10”Sch. 40	26,690	17,190	10,700
8” IPS/10”Sch. 10	16,160	10,400	6,480
8” IPS/12”Sch. 40	32,190	20,730	12,910
10” IPS/12”Sch. 10	17,930	11,540	7,190
10” IPS/14”Sch. 40	26,770	17,240	10,730
12” IPS/16”Sch. 40	29,500	18,990	11,830
12” IPS/18”Sch. 40	57,750	37,180	23,160

Notes:

1. Table assumes nitrogen to be completely dry at atmosphere pressure and 70°F, and assumes 100% mixing.
2. In many applications, a dew point of −20°F is lower than is necessary. A higher design dew point will require less nitrogen.
3. This table assumes 100% mixing, which yields results that are highly conservative. Actual practice should consume less nitrogen.

entire project. Table B13.1 shows that, for a majority of systems, it takes a relatively small amount of nitrogen to decrease the moisture content of a system to the equivalent of the saturation level (dew point) at −20°F, a level at which no condensation could be expected in most applications. Since bottled nitrogen currently (1994) costs approximately $0.14–0.15 (U.S.) per cubic ft when supplied in bottles that hold the gas at 2200 psi (150 bar), the cost for nitrogen will typically be less than $1000.00 (U.S.). The data assume 100 percent mixing in all cases, which is an extremely conservative assumption.

The discussion in the preceding paragraph is valid for systems where the annular space is closed in a leak-tight manner. However, in a system that terminates in an open end (including at a manhole entry), natural draft circulation will occur due to temperature differences between the gas in the annulus and the outside ambient air. This means that moist air eventually will return to the annular space through this process. The answer to this dilemma is that the atmosphere should be replaced initially, and then periodically recharged with the same dry gas to displace the moist air that periodically returns. The period of time for replacing the air will depend on the specifics of the climate, the season of the year, and the layout of the system. Another alternative is to install an air line at the beginning of the annulus from a source that continuously puts out relatively dry air at a pressure slightly higher than atmospheric, thereby continually displacing the volume of air in the system. This would most likely be an overly conservative and expensive approach for most systems, but an alternative none the less. In general, close-ended systems are preferable to open-ended systems so recharging can be minimized.

CHAPTER B14
PRESSURE AND LEAK TESTING

INTRODUCTION

Robert B. Adams
President and CEO
EST Group, Inc.
Harleysville, Pennsylvania

Pressure testing is required by most piping codes to verify that a new, modified, or repaired piping system is capable of safely withstanding its rated pressure and is leak tight. Compliance to piping codes may be mandated by regulatory and enforcement agencies, insurance carriers, or the terms of the contract for the construction of the system. Pressure testing, whether or not legally required, serves the useful purpose of protecting workers and the public.

Pressure testing may also be used to establish a pressure rating for a component or special system for which it is not possible to establish a safe rating by calculation. A prototype of the component or system is subjected to a gradually increasing pressure until measurable yielding first occurs or, alternatively, to the point of rupture. Then by using derating factors specified in the code, or the standard, appropriate to the component or system, it is possible to establish a design pressure rating from the experimental data.

PIPING CODES

There are a great many codes and standards relating to piping systems. Refer to Chap. A4 for a comprehensive listing and overview of codes and standards for piping systems, covering many different applications. Two codes of major importance for pressure and leak testing are the ASME B31 (previously called ANSI B31) Pressure Piping Code and the ASME Boiler and Pressure Vessel Code. While these two codes are applicable to many piping systems, other codes or standards may have to be met as required by the authorities, insurance companies, or the owner of the system. Examples might be AWWA standards for water transmission and distribution system piping.

The ASME B31 Pressure Piping Code has several sections. They are

- ASME B31.1 for Power Piping
- ASME B31.2 for Fuel Gas Piping
- ASME B31.3 for Process Piping
- ASME B31.4 for Liquid Transportation Systems for Hydrocarbons, Liquid Petroleum Gas, Anhydrous Ammonia, and Alcohols

- ASME B31.5 for Refrigeration Piping
- ASME B31.8 for Gas Transmission and Distribution Piping Systems
- ASME B31.9 for Building Services Piping
- ANSI/ASME B31.11 for Slurry Transportation Piping Systems

The ASME Boiler and Pressure Vessel Code also has several sections which contain pressure and leak testing requirements for piping systems, pressure vessels, and other pressure retaining items. These are

- Section I for Power Boilers
- Section III for Nuclear Power Plant Components
- Section V for Non Destructive Examination
- Section VIII for Pressure Vessels
- Section X for Fiberglass Reinforced Plastic Pressure Vessels
- Section XI for In Service Inspection of Nuclear Power Plant Components

There is great similarity with respect to the requirements and procedures for testing among the many codes. Various leak-testing methods, planning, preparation, execution, documentation, and acceptance standards for pressure testing will be discussed in this chapter. Equipment, useful for pressure testing, will also be included in the discussion. The material that follows should not be considered a substitute for a complete knowledge or careful study of the particular code requirement that must be used to test a particular piping system.

LEAK-TESTING METHODS

There are many different methods for pressure and leak testing in the field. Seven of these are

1. Hydrostatic testing, which uses water or another liquid under pressure
2. Pneumatic or gaseous-fluid testing, which uses air or another gas under pressure
3. A combination of pneumatic and hydrostatic testing, where low pressure air is first used to detect leaks
4. Initial service testing, which involves a leakage inspection when the system is first put into operation
5. Vacuum testing, which uses negative pressure to check for the existence of a leak
6. Static head testing, which is normally done for drain piping with water left in a standpipe for a set period of time
7. Halogen and helium leak detection

Hydrostatic Leak Testing

Hydrostatic testing is the preferred leak-testing method and perhaps the most often used. The most important reason for this is the relative safety of hydrostatic testing compared to pneumatic testing. Water is a much safer fluid test medium than air because it is nearly incompressible. Therefore, the amount of work required to compress water to a given pressure in a piping system is substantially less than the work required to compress air, or any other gas, to the same pressure. The work of compression is stored in the fluid as a potential energy, which could be released suddenly in the event of a failure during a pressure test. A calculation of the potential energy of air compressed to a pressure of 1000 psig (6900 kPa) compared to the potential energy of the same final volume of water at 1000 psig (6900 kPa) shows a ratio of over 2500 to 1. Therefore, the potential damage to surrounding equipment and personnel resulting from a failure during a pressure test is far more serious when using a gaseous test medium. That is not to say that there is no danger at all in a hydrostatic leak test. There can be substantial danger in a hydrostatic test due to air trapped in the piping. Even if all air is vented from the piping before pressurizing, workers are well advised to conduct any high-pressure test with safety in mind.

Hydrostatic testing may not be practical if during normal operation, the piping system cannot tolerate traces of water or its residue. An example would be a cryogenic system, which operates at a subfreezing temperature for water. The time required for removal of all traces of water prior to placing the system into operation could impede the startup process. Another example would be piping for a liquid sodium system. Traces of water left in the pipe would react violently with the liquid sodium. If another convenient-to-use liquid is not available, it may be more practical to use pneumatic testing.

Another disadvantage of hydrostatic testing may be the cost of disposal of the water if it has become environmentally contaminated from residue in the piping. In addition, it takes more time to fill and empty the system. Furthermore, if the system normally operates with a gaseous medium, the piping may not be strong enough to support the weight of a liquid test medium without additional temporary supports.

Inspection for leaks is a visual examination of all joints for signs of water. The leak-detecting capability of a hydrostatic test is not as good as a pneumatic test and is far less sensitive than a properly conducted halide or helium leak test. A hydrostatic test is sufficiently sensitive if the system normally operates with a liquid. However, if the system normally operates with a gaseous medium and slight leakage of this medium is unacceptable, a hydrostatic test may not be sufficiently sensitive to detect a slight gas leak. The reason for this is that the surface tension of water can act as a barrier to a leakage path that has a very small dimension. A gaseous-fluid test medium will leak through a small space that water will not pass through because of the surface tension of water. If it is sufficient that a system designed to operate a gaseous process is bubble tight, pneumatic testing is appropriate. However, if the leakage requirement is more stringent than bubble tight, halide or helium leak testing would be required. In either case the gaseous test is only more sensitive than the hydrostatic test if the system is completely dry at the time of the test.

Pneumatic Leak Testing

The fluid normally used for a pneumatic test is compressed air, or nitrogen if the source is bottled gas. Nitrogen should not be used in a closed area if the possibility exists that the escaping nitrogen could displace the air in the confined space. Persons have been known to become unconscious under such circumstances before realizing they were short of oxygen.

Because of the greater danger of injury with a gaseous test medium, the pressure that may be used for visual examination for leaks is lower for some piping codes than is the case for a hydrostatic test. For example, for pneumatic tests, ASME B31.1 permits the pressure to be reduced to the lower of 100 psig (690 kPa) or the design pressure during the examination for leakage. If the pressure required by the code is quite high, persons may be barred from the test area and sonic listening devices used to search for leaks. However, normally inspection for a leak is done with a soapy-water mixture that is applied to the joints and which produces bubbles when air is escaping. The applicable code may specify that pneumatic testing can only be done with the approval of the owner of the system (for example, ASME B31.1 section 137.5.1 and B31.3 section 345.5.1).

Combination Pneumatic and Hydrostatic Testing

A low air pressure, most often 25 psig, (175 kPa) is first used to see if there are major leaks. This low pressure reduces the danger of personal injury but still enables major leaks to be quickly located. Repairs, if needed, can then be done before the hydrostatic test. This method can be very effective in saving time, particularly if it takes a long time to fill a system with water only to find leaks on the first try. If leaks are found in a hydrostatic test, it will take longer to remove the water and dry the piping sufficiently to make repairs.

Hydrostatic-pneumatic leak testing is different from the two-step test in the preceding paragraph. In this case the pressure test is conducted with a combination of air and water. For example, a pressure vessel designed to contain a process liquid with a vapor phase or air above the liquid may have been designed to support the weight of liquid to a certain maximum-expected height of liquid. If the vessel was not designed to support the weight when completely filled with liquid, it would be possible to test this vessel only if it was partially filled with process fluid to a level duplicating the effect of the maximum-expected level.

Initial Service Leak Testing

This category of testing is limited by the codes to certain situations. For example, ASME B31.3 limits the use of this technique to category D fluid service. Category D fluid services are defined as nonhazardous to humans and must operate below 150 psi (1035 kPa) and at temperatures between −20 and 366°F (−29 and 185°C). ASME Code B31.1, section 137.7.1, does not allow initial service testing of boiler external piping. However, that same section of ASME B31.1 permits initial service testing of other piping systems if other types of leak testing are not practical. Initial service testing is also applicable to inspection of nuclear power plant components by Section XI of the ASME Boiler and Pressure Vessel Code.

As indicated, this test is usually run when the system is first put into operation. The system is gradually raised to normal operating pressure as required in ASME B31.1 or design pressure as required in ASME B31.3. It is then maintained at that pressure while an examination for leaks is conducted.

Vacuum Leak Testing

Vacuum leak testing is an effective way to determine whether or not there is a leak anywhere in the system. This is normally done by drawing a vacuum on the system and trapping the vacuum within the system. A leak is indicated if the trapped vacuum rises toward atmospheric pressure. A manufacturer of components quite often uses this type of leak test as a production leak test.

However, it is very difficult to determine the location or locations of a leak if one exists. Smoke generators have been used to determine the piping location where smoke is drawn into the piping. This is very difficult to utilize unless the leak is sufficiently great to draw all or most of the smoke into the pipe. If there is substantially more smoke generated than can be drawn into the pipe, the smoke that dissipates into the surrounding air can easily hide the leak location.

Obviously, this method is not suitable for testing the piping at or above the operating pressure unless the piping is to be operated at a vacuum.

Static-Head Leak Testing

This test method is sometimes called a drop test because a drop in the water level in the open standpipe, added to the system to create the required pressure, is an indication of a leak. Once the system and standpipe is filled with water, the standpipe level is measured and noted. After a required hold period, the height is rechecked and any decrease in level and the hold period are recorded. Any leak location is determined by visual inspection.

Halogen and Helium Leak Testing

These test methods use a tracer gas to identify leakage location and leakage quantity. In the case of halogen leak detection, the system is charged with halogen gas. A halogen detector probe is used to sense leakage of the tracer gas from any exposed joint. The halogen leak detector, or sniffer, consists of a tubular probe which sucks a mixture of leaking halogen gas and air into an instrument sensitive to small amounts of halogen gas. This instrument employs a diode to sense the presence of halogen gas. The leaking halogen gas is passed over a heated platinum element (the anode). The heated element ionizes the halogen gas. The ions flow to a collector plate (the cathode). Current proportional to ion formation rate, and thus to leakage flow rate, is indicated by a meter. The halogen detector probe is calibrated using an orifice that passes a known leakage flow. The detector probe is passed over the orifice at the same rate that will be used to examine the system for leakage. The preferred tracer gas is refrigerant 12, but refrigerants 11, 21, 22, 114, or methylene chloride may be used. Halogens should not be used with austenitic stainless steels.

Helium leak testing may also be done in the sniffer mode, as explained above for halogens. However, in addition, helium leak testing may be performed using two other methods that are more sensitive in detecting leakage. These are the tracer mode and the hood or closed system mode. In the tracer mode a vacuum is drawn on the system, and helium is sprayed onto the outside of joints to be inspected for leakage. The system vacuum draws helium through any leaking joint and delivers it to a helium mass spectrometer. In the hood mode, the system to be tested is surrounded by concentrated helium.

The hood mode of helium leak testing is the most sensitive method for detecting leaks and the only method accepted by ASME Code Section V as quantitative. Manufacturers of components requiring a hermetic seal will use the hood method of helium leak detection as a production leak test. In these cases, the component may be surrounded by helium in a chamber. A connection to the component is made to a helium leak detector, which attempts to draw the internals of the component to a vacuum close to absolute zero. Any leakage of helium from the surrounding chamber into the component will de drawn into the helium leak detector by the vacuum it is producing. The helium leak detector contains a mass spectrometer configured to sense the presence of helium molecules. This closed-system testing method is capable of sensing leaks as small as 1×10^{-10}cc/sec (6.1×10^{-12} cubic in/sec), standard atmospheric air equivalent. The closed-system method is not appropriate to measuring a large leak that would flood the detector and render it useless for further measurement until every helium molecule could be withdrawn from the detector.

The closed-system method is not appropriate to a piping system in the field because of the large volumes. Also it does not show the location of the leak or leaks. Finally, the sensitivity of leak detection, using the closed system, is many orders of magnitude greater than normally required. The helium sniffer is the least sensitive method and is subject to false indications if helium from a large leak at one location in the system diffuses to other locations. A large leak can also flood the detector, temporarily rendering it useless until all the helium is removed from the mass spectrometer. The helium pressure used in all these methods is normally one or two atmospheres, which is sufficient to detect the presence of very small leaks. The low pressure also serves to reduce the amount of helium required for the test. Helium leak testing is rarely, if ever, used to demonstrate that the system can safely withstand the design pressure rating.

Helium leak detectors will not be successful in finding leaks unless the component or piping system is completely dry. Liquid contained in a small leakage path, due to capillary action, may seal the leak because of the low pressure of the helium and the surface tension of the liquid. Therefore great care is required to use this approach under completely dry conditions. Otherwise this system may be even less sensitive in detecting a leak than a high-pressure hydrostatic test. Furthermore, the helium leak detector is easily contaminated by oils and other compounds and rendered inaccurate. Field conditions are normally not free of the possibility for contamination of the leak detector.

Sensitivities of Leak-Testing Methods and Acceptance Standards

The order in which the various leak-testing methods indicate leak tightness, from least sensitive to most sensitive, are

1. Hydrostatic leak testing with visual observation
2. Pneumatic testing with visual observation of bubbles in soapy mixture
3. Gas lake testing
4. Helium-mass spectrometer sniffer
5. Halogen-diode sniffer
6. Helium-mass-spectrometer tracer technique
7. Helium-mass-spectrometer hood method

The gas lake method is similar to pneumatic testing, but instead of using a soapy mixture to detect leakage, all the pneumatic leakage is collected and passed through a water trap to permit a quantitative measurement of total leakage. Obviously the gas lake method is practical only with certain piping or vessel configurations that make it simple to conduct all the leakage to one location.

Pneumatic bubble testing should provide for a sensitivity of at least 10^{-3} std cc/sec (6.1×10^{-5} cu in/sec). Pneumatic testing is at least 57 times more sensitive than hydrostatic testing at the same pressure because of the ratio of viscosities. This ratio can be even larger when considering the barrier effects of surface tension in a hydrostatic test.

The maximum acceptable leak rate standards in ASME Code Section V for tracer gas methods are

1. Helium sniffer maximum acceptable leak rate of 1×10^{-4} std cc/sec (6.1×10^{-6} std cu in/sec)
2. Halogen sniffer maximum acceptable leak rate of 1×10^{-4} std cc/sec (6.1×10^{-6} std cu in/sec)
3. Helium-tracer-probe maximum acceptable leak rate of 1×10^{-5} std cc/sec (6.1×10^{-7} std cu in/sec)
4. Helium-hood-method maximum acceptable leak rate of 1×10^{-6} std cc/sec (6.1×10^{-8} std cu in/sec)

The maximum sensitivity of the helium-hood method can be increased in special cases from 10^{-10} std cc/sec (6.1×10^{-12} std cu in/sec) to 10^{-14} std cc/sec (6.1×10^{-16} std cu in/sec). This is done by allowing the leakage to accumulate in a known volume before a measurement of the leakage is made.

SELECTION OF A TEST METHOD AND FLUID TEST MEDIUM

The test method and fluid test medium to be used are most often known at the early stage of design of the piping system. The piping system contract will usually specify the applicable codes. Even if the applicable codes are not spelled out, the piping designers will know which codes will apply, based upon the piping system application and the jurisdiction. The codes in turn specify the allowable pressure and leak-testing methods. The designers will almost always know from experience which of the various testing methods permitted by the applicable code will be employed by the contractor. Based on this knowledge, the piping-system designers will provide the means required for running the tests, such as properly located connections for filling, venting, pressurizing, and measuring the test pressure of the system. They may even provide for additional temporary supports for the weight of a liquid test medium if the piping is for a gaseous-process medium.

They will also consider how portions of the system that are not to be tested may be isolated from the portions under test. This is usually done with isolating valves and flange blinds. In some cases field tests need to be conducted on subassemblies of process piping or equipment. In those cases the piping or vessels may have openings for later connection to the final system. If there are open ends of the piping or open connections to a vessel that must be sealed during the pressure test, hydrostatic test plugs may be more economically employed for this purpose than temporarily sealing these openings by welding. Cross-sectional views of hydrostatic test plugs, shown in Fig. B14.1 and B14.2, are discussed in greater detail in the later section titled Hydrostatic Test Plugs. The advance knowledge of a requirement for hydrostatic test plugs can be especially important for plug sizes larger than NPS 12 (DN300). Larger test plugs usually require longer delivery times.

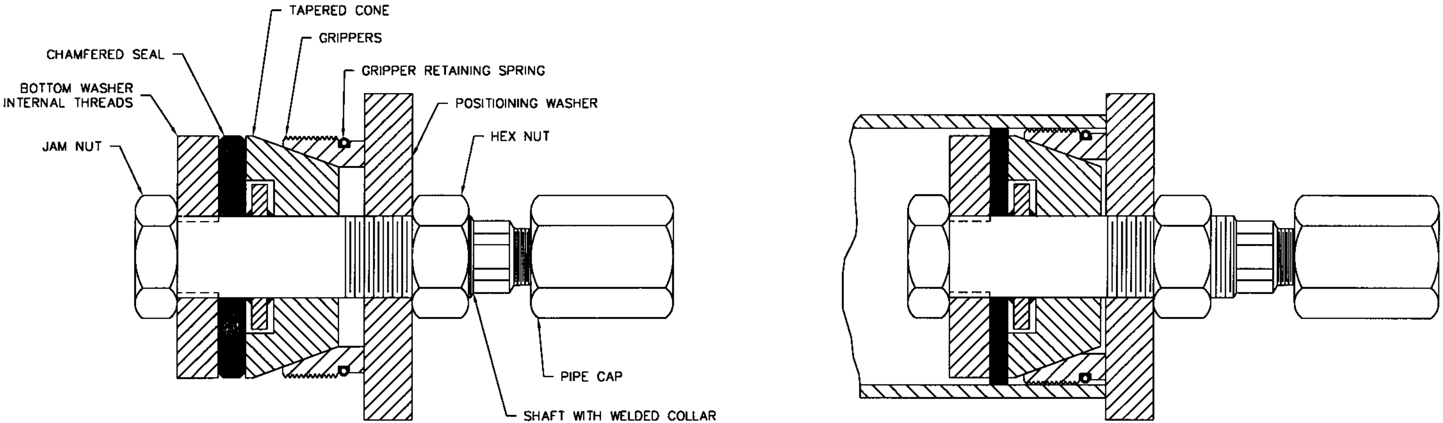
TAPERED CONE
GRIPPERS
CHAMFERED SEAL
GRIPPER RETAINING SPRING
BOTTOM WASHER
INTERNAL THREADS
POSITIOINING WASHER
HEX NUT
JAM NUT
PIPE CAP
SHAFT WITH WELDED COLLAR

GRIP TIGHT TEST PLUG INSTALLED IN PIPE

FIGURE B14.1 ID test plug. (*Courtesy of Expansion Seal Technologies, Harleysville, PA.*)

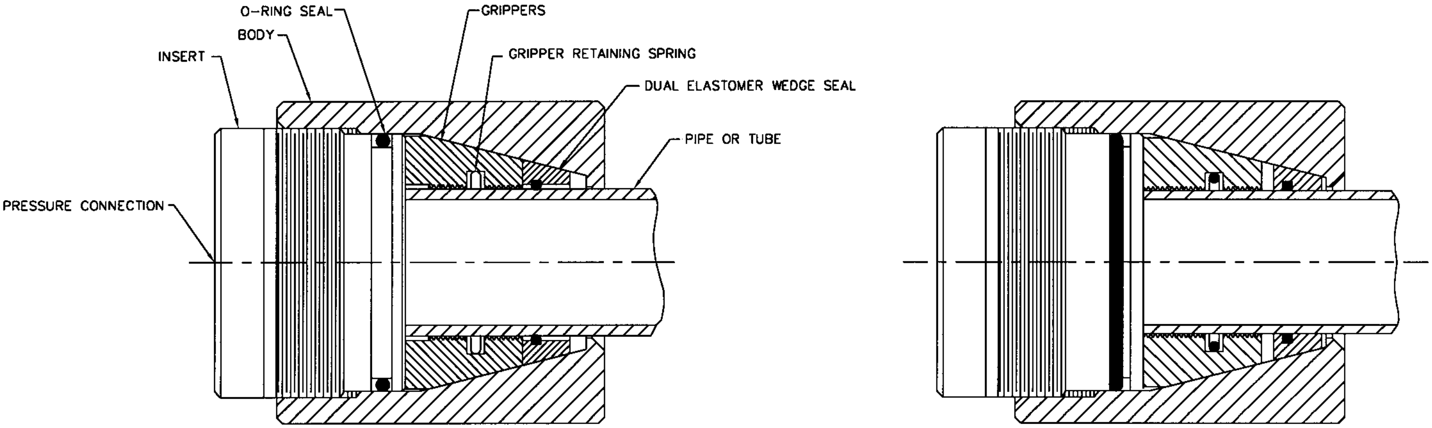
O-RING SEAL
GRIPPERS
BODY
GRIPPER RETAINING SPRING
INSERT
DUAL ELASTOMER WEDGE SEAL
PIPE OR TUBE
PRESSURE CONNECTION

OD TEST PLUG BEFORE PRESSURE IS ADMITTED

OD TEST PLUG AFTER PRESSURE IS ADMITTED

FIGURE B14.2 OD test plug. (*Courtesy of Expansion Seal Technologies, Harleysville, PA.*)

The chosen leak-testing method must be compatible with the piping-system requirements, in addition to meeting the code or standards requirements. Additionally the fluid test medium must be selected. These two choices are essential in establishing the test equipment required to fill or evacuate the piping, set and regulate the test pressure, and detect leaks by other than visual means. In addition, these two choices establish whether temporary additional supports may be required to support the weight of the test fluid medium. This entire test-related equipment must be arranged for far enough in advance to be available and in place prior to the starting date for the leak test.

Hydrostatic testing is most often preferred over pneumatic testing because of safety considerations. Water is the preferred fluid medium for hydrostatic testing. In addition to its relatively incompressible nature, it is also the safest fluid because it is nontoxic and nonflammable and it remains in liquid form down to atmospheric pressure unless heated above the boiling point. Water is readily and economically available. ASME B31.1, section 137.4.3, specifies water as the test fluid for hydrostatic tests unless otherwise specified. ASME B31.3, section 345.4.1, also specifies water as the test fluid for hydrostatic test unless there is the possibility of freezing or damage from adverse effects of water on the piping or the process for which the piping system is designed. This section provides for other uses of other nontoxic liquids as long as the flash point exceeds 120°F (49°C). If hydrostatic testing is being considered for a system that was designed for use of a gaseous medium as the process fluid, it must first be determined that the piping system will support the weight of the test liquid or that the piping can be safely supported during the hydrostatic test.

There are some cases where water cannot be employed as a fluid test medium. Traces of water left in the piping may react adversely with the process; for example, in piping for liquid sodium or a cryogenic process. If the test is to be run at temperature conditions which would make freezing likely, antifreeze may be added to the water as long as the antifreeze is not harmful to the piping or the process and the disposal of large amounts of antifreeze is not environmentally unacceptable. If water cannot be employed as the fluid test medium and another liquid is not practical, or if it is not practical to support the weight of a test liquid with piping supports, a pneumatic test may be the next best choice.

Testing of Piping Additions, Modifications, or Repairs

There is a lesser known technique for testing piping modifications or additions to older systems that can save considerable effort by testing only the new, modified, or repaired joints without the need for filling the entire piping system. This involves using a special device, called a flange test plug, shown in the cross-sectional view of Fig. B14.3, that will test only the weld between a weld-neck or slip-on flange and pipe. A modification of the flange test plug of Fig. B14.3 can be used to help make the weld between a weld-neck flange and a pipe in addition to also testing the weld. The modification adds a center port to sense any pressure in the pipe behind the plug and lengthens the plug to prevent seal damage from the heat of the weld. This device, called a flange weld plug, aligns the parts to be welded, provides for any gas purging requirements during the welding, and warns or protects the welder against any unexpected increase in pressure back in the pipe. Finally a special dumbbell test plug, shown in Fig. B14.4, may also be used to test only a single weld. The flange test plug, flange weld plug, and special dumbbell plugs are explained in greater detail in the later section titled Hydrostatic Test Plugs Suited

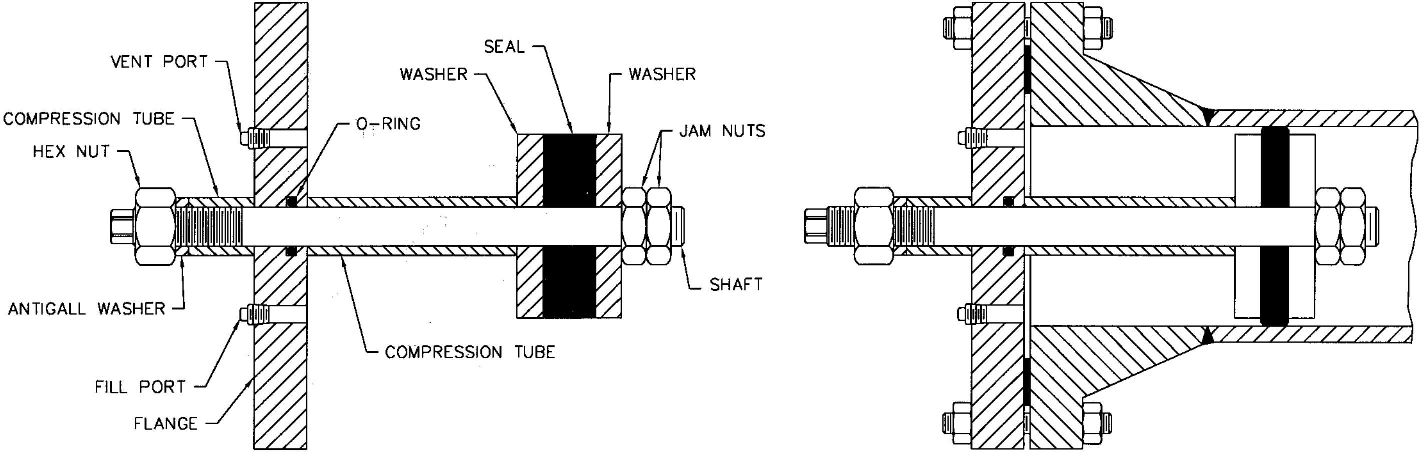
SEAL
VENT PORT
WASHER
WASHER
COMPRESSION TUBE
O-RING
JAM NUTS
HEX NUT
SHAFT
ANTIGALL WASHER
COMPRESSION TUBE
FILL PORT
FLANGE

FIGURE B14.3 Flange test plug and flange weld plug. (*Courtesy of Expansion Seal Technologies, Harleysville, PA.*)

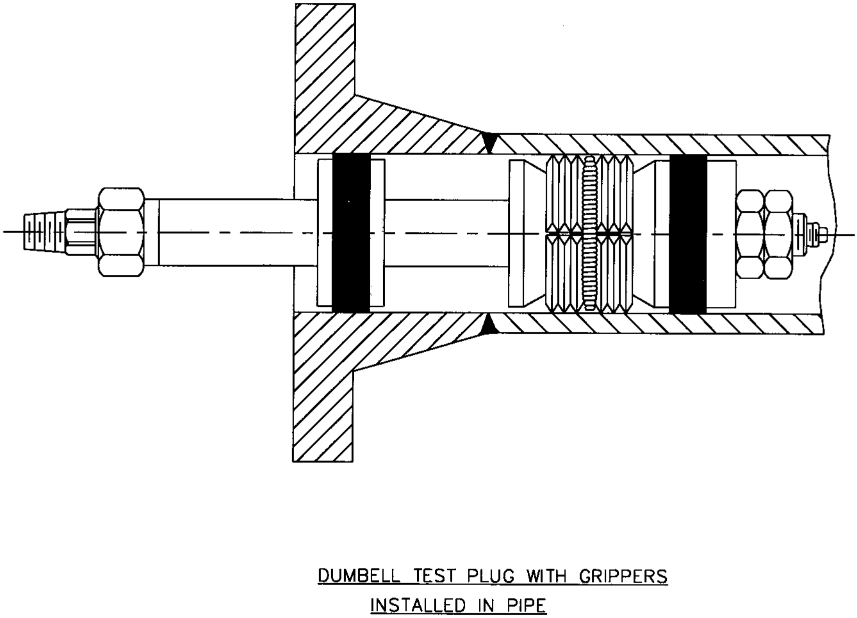

FIGURE B14.4 Special dumbbell plug. (*Courtesy of Expansion Seal Technologies, Harleysville, PA.*)

to Testing a Single Weld. All these devices save considerable time and money in testing plant expansions or modifications because it takes only moments to fill the small space surrounding the weld to be tested with the fluid test medium. There is also a substantial cost saving in the reduced amount of contaminated test liquid to be disposed of. It is always best to consider such options at the design stage because of the delivery time required for these special devices.

Test Pressures

The selected test method and fluid test medium, together with the applicable code, will also establish the rules to be followed in calculating the required test pressure. In most cases a pressure greater than the design pressure rating is applied for a short duration, say at least 10 minutes. The magnitude of this initial test pressure is often at least 1.5 times the design pressure rating for a hydrostatic test. However, it may be different, depending upon which code is applicable and whether the test is hydrostatic or pneumatic. Furthermore, the test pressure must never exceed a pressure that would cause yielding, or the maximum allowable test pressure of some component exposed to the test. In the case of ASME B31, section 137.1.4, and the Boiler and Pressure Vessel Codes, the maximum test pressure must not exceed 90 percent of yield for any component exposed to the test. The test pressure is needed to demonstrate that the system can safely withstand the rated pressure. Following this period of greater than design pressure, it is often permissible to reduce the pressure to a lower value for examination of leaks. The examination pressure is maintained for the length of time necessary to conduct a thorough

TABLE B14.1 Test and Examination Pressures

Code	Test type	Test pressure minimum	Test pressure maximum	Test pressure hold time	Examination pressure
ASME B31.1	Hydrostatic[1]	1.5 times design	Max allowable test pressure any component or 90 percent of yield	10 minutes	Design pressure
ASME B31.1	Pneumatic	1.2 times design	1.5 times design or max allowable test pressure any component	10 minutes	Lower of 100 psig or design pressure
ASME B31.1	Initial service	Normal operating pressure	Normal operating pressure	10 minutes or time to complete leak examination	Normal operating pressure
ASME B31.3	Hydrostatic	1.5 times design[2]	Not to exceed yield stress	Time to complete leak examination but at least 10 minutes	1.5 times design
ASME B31.3	Pneumatic	1.1 times design	1.1 times design plus the lesser of 50 psi or 10 percent of test pressure	10 minutes	Design pressure
ASME B31.3	Initial service[3]	Design pressure	Design pressure	Time to complete leak examination	Design pressure
ASME I	Hydrostatic	1.5 times max allowable working pressure[4]	Not to exceed 90 percent yield stress	Not specified, typically 1 hr	Max allowable working pressure[4]
ASME III Division 1 Subsection NB	Hydrostatic	1.25 times system design pressure[5]	Not to exceed stress limits of design section NB-3226 or maximum test pressure of any system component[5]	10 minutes	Greater of design pressure or .75 times test pressure
ASME III Division 1 Subsection NB	Pneumatic	1.2 times system design pressure[6]	Not to exceed stress limits of design section NB-3226 or maximum test pressure of any system component	10 minutes	Greater of design pressure or .75 times test pressure

TABLE B14.1 Test and Examination Pressures (*Continued*)

Code	Test type	Test pressure minimum	Test pressure maximum	Test pressure hold time	Examination pressure
ASME III Division 1 Subsection NC	Hydrostatic	1.5 times system design pressure	If minimum test pressure exceeded by 6 percent establish limit by the lower of analysis of all test loadings or maximum test pressure of any component	10 minutes or 15 minutes per inch of design minimum wall thickness for pumps and valves	Greater of design pressure or .75 times test pressure
ASME III Division 1 Subsection NC	Pneumatic	1.25 times system design pressure	If minimum test pressure exceeded by 6 percent establish limit by the lower of analysis of all test loadings or maximum test pressure of any component	10 minutes	Greater of design pressure or .75 times test pressure
ASME III Division 1 Subsection ND	Hydrostatic	1.5 times system design pressure for completed components, 1.25 times system design pressure for piping systems	If minimum test pressure exceeded by 6 percent establish limit by the lower of analysis of all test loadings or maximum test pressure of any component	10 minutes	Greater of design pressure or .75 times test pressure
ASME III Division 1 Subsection ND	Pneumatic	1.25 times system design pressure	If minimum test pressure exceeded by 6 percent establish limit by the lower of analysis of all test loadings or maximum test pressure of any component	10 minutes	Greater of design pressure or .75 times test pressure

Notes:

1. Boiler external piping must be hydrostatic tested in accordance with PG-99 of ASME Code Section I.
2. ASME B31.3 hydrostatic pressure must be raised above 1.5 times design pressure in proportion to yield strength at test temperature divided by strength at design temperature but not to exceed yield strength at test temperature. Where a vessel is involved whose design pressure is less than the piping and where vessel cannot be isolated, the piping and vessel can be tested together at vessel test pressure provided vessel test pressure is not less than 77 percent of piping test pressure.
3. ASME B31.3 initial service testing permitted only for piping in category D service.
4. ASME Code Section I hydrostatic test pressure at temperature of at least 70°F (21°C) and examination pressure at temperature less than 120°F (49°C). For a forced-flow steam generator with pressure parts designed for different pressure levels, the test pressure should be at least 1.5 times the maximum allowable working pressure at the superheater outlet but not less than 1.25 times the maximum allowable working pressure of any part of the boiler.
5. ASME Code Section III, Division 1, subsection NB, test pressure limits defined in section NB3226; also components containing brazed joints and valves to be tested at 1.5 times system-design pressure prior to installation.
6. ASME Code Section III, Division 1, subsection NB, pneumatic test pressure for components partially filled with water shall not be less than 1.25 times system-design pressure.

inspection for leakage. Again the examination pressure depends upon the particular code and the selected method of testing. Table B14.1 gives test and examination pressures for some of the ASME B31 and Boiler and Pressure Vessel codes.

The test pressure for each test is calculated by multiplying the code requirements for the leak-test method by the design pressure of the weakest component or line within the test boundary. An exception to this occurs when the design rating is given for a higher temperature than the temperature at which the pressure and leak test will be conducted. In this case the test pressure must be increased by an amount reflecting the decrease in strength of the material between the test temperature and the operating temperature unless that would exceed code limitations regarding the maximum test pressure. Another exception occurs in ASME B31.3, where a vessel cannot be isolated from the system, and the allowable vessel pressure is less than calculated test pressure for the piping. In such a case it is acceptable to hydrostatic test the piping at the maximum allowable vessel–test pressure provided the owner approves and the reduced test pressure is at least 77 percent of the calculated test pressure per ASME B31.3, section 345.4.3.

PRESSURE TESTING PROCEDURES

The field engineer, responsible for the implementation of the field test program, must first be familiar with the testing provisions of the code or standards that are part of the contract. This person must assure coordination between the test supervisor, QA/QC, the contractor, and owner. The person responsible for the testing should begin preparation for the testing phase far enough ahead of piping system completion so that all the equipment needed to conduct the test is ready to be used and all preparations are completed before testing is scheduled to begin.

Preparation of Test-Package Documentation

A P&ID (piping and instrumentation diagram) marked with information concerning the pressure test, the piping isometrics, a valve line-up sheet, a test cover sheet, and a test data sheet make up the package of test documentation.

The P&ID should be marked with the scope of the leak test, showing boundary valves and test blind locations to isolate connections of the piping to the parts of the system which do not need to be pressure tested. If hydrostatic test plugs are required to seal any pipe or vessel openings, that requirement should be noted. The valve line-up sheet shown in Fig. B14.5 should be completed, showing the valve positions required for the test. Also identify any valves which must have the internals removed or must be blocked in position. Test blinds may be fabricated in accordance with the data given in Table B14.2. The ASME B31 codes do not require retesting of a flanged joint once the blinds are removed.

Determine the required test pressure by reviewing the P&ID drawings to obtain the lowest line index and lowest design pressure rating within the boundary of the test. Two checks are required for proper test pressure.

First, review the design documents and vendor information to ensure that the test pressure will not overpressurize any equipment or piping component within the pressure test boundary. In addition, verify that there will be no possibility of brittle fracture at the test pressure and temperature.

Second, determine the head loss between the lowest part of the piping and the gauge location. The head loss in psig is equal to the difference in elevation in feet

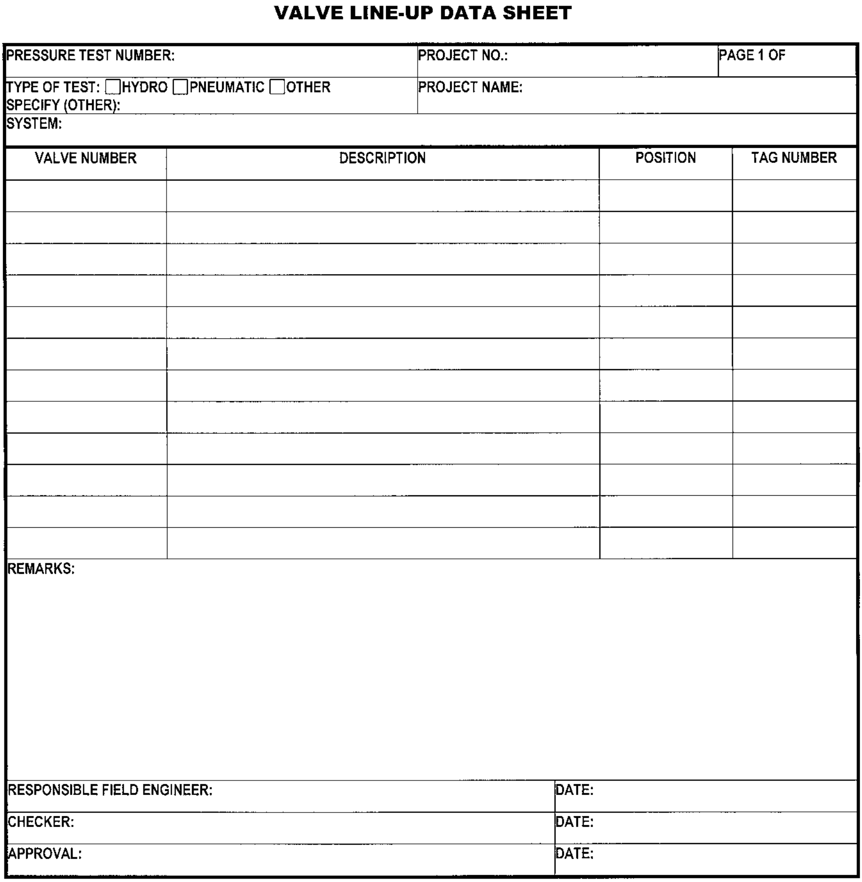

VALVE LINE-UP DATA SHEET

PRESSURE TEST NUMBER:	PROJECT NO.:	PAGE 1 OF
TYPE OF TEST: ☐HYDRO ☐PNEUMATIC ☐OTHER SPECIFY (OTHER):	PROJECT NAME:	
SYSTEM:		

VALVE NUMBER	DESCRIPTION	POSITION	TAG NUMBER

REMARKS:

RESPONSIBLE FIELD ENGINEER:	DATE:
CHECKER:	DATE:
APPROVAL:	DATE:

FIGURE B14.5 Valve line-up data sheet for pressure testing.

multiplied by 0.4327 psig/ft (9.7 kPa/m) for water as the test fluid. This will establish the required gauge readings during the test to avoid overpressure at the lowest point in the system. Determine also the pressures that the lowest parts of the system will experience.

The test cover sheet contains an identifying number for the test, test date, test pressure, fluid test-medium description, and all release and acceptance signatures. Test release authorizations depend upon the project. They may include the welding field engineer, instrumentation field engineer, mechanical field engineer, hanger field engineer, quality control inspector, superintendent, third party representative, and client representative. The piping or hanger field engineer will have to verify that the lines are supported to handle the hydraulic loads. The client may also walk down the package before the test can be performed.

The pressure-test data sheet of Fig. B14.6 is used to record the data taken during the test. It also contains provision for the sign-off required by the field engineer and the code inspector, if applicable, as is the case with boiler external piping (BEP).

TABLE B14.2 Test Blind Dimensions

Test blind fabrication data

A = Blind plate diameter
B = Paddle handle width
C = Handle height
D = Blind thickness
t = Required blind thickness
d = Nominal diameter of pipe
P = Line design pressure (psig)
S = allowable material stress

General notes:

1. Plate material types
   A-36, S = 12,600 PSI
   A-285 GR. C, S = 18,350 PSI
   A-570 GR. 36, S = 16,300 PSI

$$t = d\sqrt{\frac{3}{16} \times \frac{P}{S}}$$

Note: This will provide a safety factor of 1.7 of yield. These same values may be used for A36 plate, however, the safety factor will be reduced to 1.4

Test blind thickness schedule A285 Grade C

Pipe size	Test pressure			t, Test blind thickness						
	A	B	C	100	300	500	700	1000	1500	2000
1	2	1	4½							
1½	2⅞	1	5⅛							
2	3⅝	1	5¼							
3	5	1	6⅛	⅛	¼	½	¼	⅜	½	⅝
4	6 3/16	1	6¾	⅛	¼	⅜	⅜	½	⅝	¾
6	8½	1½	11½	¼	⅜	⅜	½	⅝	¾	1
8	10⅝	1½	12⅝	¼	½	⅝	¾	⅞	1⅛	1¼
10	12¾	1½	14	⅜	⅝	¾	1	1⅛	1¼	1½
12	15	1½	15½	½	¾	1	1⅛	1⅜	1⅝	1⅞
18	16¼	1½	16½	⅝	1	⅜	1⅝	1⅞	2¼	2⅝
20	23	1½	17¾	⅝	1⅛	1½	1¾	2⅛	2½	2⅞

A = Blind diameter
B = Grip width
C = Height from center of paddle to top of grip

Preparation

As the piping system nears completion, a check list should be made of items still requiring completion before testing can begin. This list must be pursued by the person(s) responsible for running the test until all remaining items are completed. Otherwise, it could be discovered that the system is not ready to be tested only when testing is ready to begin. Reviewing P&ID drawings is the best way to develop

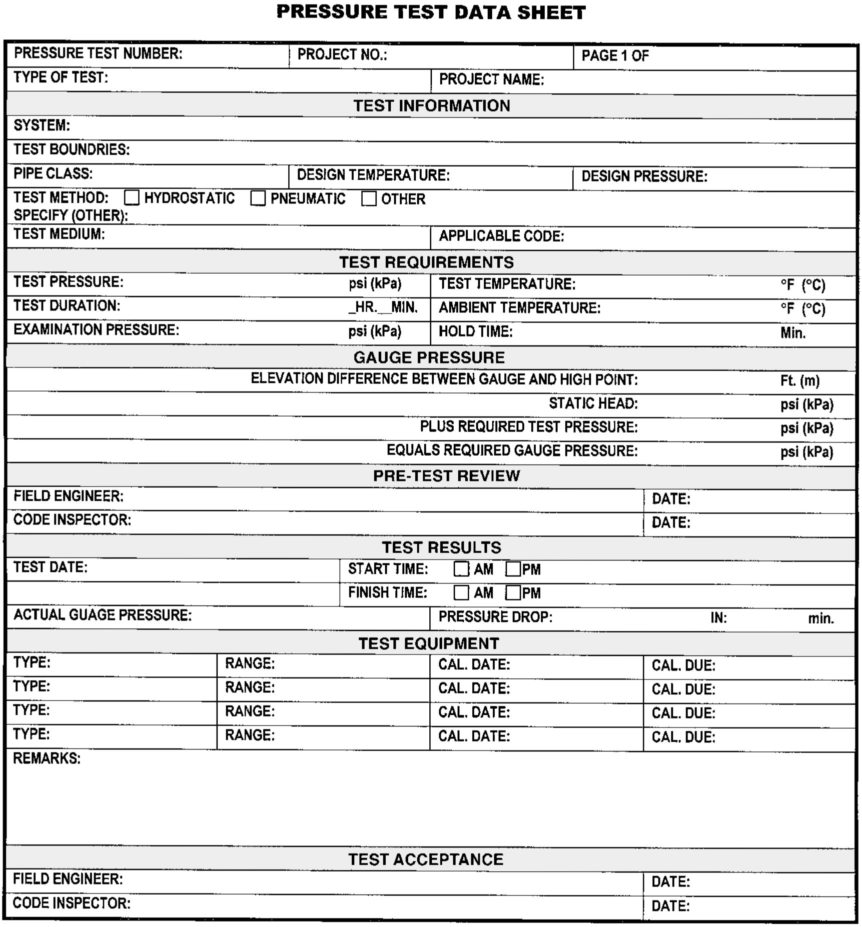

PRESSURE TEST DATA SHEET

PRESSURE TEST NUMBER:	PROJECT NO.:	PAGE 1 OF	
TYPE OF TEST:		PROJECT NAME:	
TEST INFORMATION			
SYSTEM:			
TEST BOUNDRIES:			
PIPE CLASS:	DESIGN TEMPERATURE:	DESIGN PRESSURE:	
TEST METHOD: ☐ HYDROSTATIC ☐ PNEUMATIC ☐ OTHER SPECIFY (OTHER):			
TEST MEDIUM:		APPLICABLE CODE:	
TEST REQUIREMENTS			
TEST PRESSURE:	psi (kPa)	TEST TEMPERATURE:	°F (°C)
TEST DURATION:	_HR.__MIN.	AMBIENT TEMPERATURE:	°F (°C)
EXAMINATION PRESSURE:	psi (kPa)	HOLD TIME:	Min.
GAUGE PRESSURE			
		ELEVATION DIFFERENCE BETWEEN GAUGE AND HIGH POINT:	Ft. (m)
		STATIC HEAD:	psi (kPa)
		PLUS REQUIRED TEST PRESSURE:	psi (kPa)
		EQUALS REQUIRED GAUGE PRESSURE:	psi (kPa)
PRE-TEST REVIEW			
FIELD ENGINEER:			DATE:
CODE INSPECTOR:			DATE:
TEST RESULTS			
TEST DATE:	START TIME: ☐ AM ☐PM		
	FINISH TIME: ☐ AM ☐PM		
ACTUAL GUAGE PRESSURE:		PRESSURE DROP:	IN: min.
TEST EQUIPMENT			
TYPE:	RANGE:	CAL. DATE:	CAL. DUE:
TYPE:	RANGE:	CAL. DATE:	CAL. DUE:
TYPE:	RANGE:	CAL. DATE:	CAL. DUE:
TYPE:	RANGE:	CAL. DATE:	CAL. DUE:
REMARKS:			
TEST ACCEPTANCE			
FIELD ENGINEER:			DATE:
CODE INSPECTOR:			DATE:

FIGURE B14.6 Pressure test data sheet.

this checklist. A comparison of the P&ID drawings and the piping isometrics must be made to determine if there are any discrepancies. Review all valve types, flow directions, branch tie-ins, and any material changes. Recheck all in-line components to verify they can withstand the required test pressure.

After the crosscheck is complete conduct a physical inspection of the piping system using the P&IDs and piping isometrics. Typically systems are inspected for

- Completed and torqued flanges with no missing bolts or gaskets
- All gravity supports installed
- Proper pipe routing
- Correct valve type and orientation
- Vents and drains installed to allow proper filling and draining

- Proper material type verified using color codes or markings, and heat numbers recorded if required by the codes
- All required piping stress relief, weld examinations, and welding documentation completed and acceptable

Before the test is to be run, make certain, by reviewing the piping against the P&ID and valve line-up sheet, that

- All equipment not to be tested is disconnected from the test or isolated by closed valves or testing blinds
- Tagging and lockout of any valves used to isolate the test boundaries is in place to protect both the testing personnel and any others who may be on site
- All nonboundary valves in the test boundary are in the open position
- Expansion joints, if any, have required restraints to protect against damage from the test pressure
- All springs have travel stops to protect against the weight of the test medium
- All test equipment is checked and all test connections are tight

For gas systems, additional gravity supports may be required temporarily to support the weight of the test liquid.

Since requirements vary from project to project, the person responsible for the test will need to make a specific checklist of items for each project before testing can begin.

Hydrostatic Testing Preparation

All joints, including welds and flanges, of the portions of the system to be tested are left uninsulated and exposed for examination during the test. Some insulation may be installed on the straight runs or previously tested piping. If the system is to include jacketed piping, the leak tests should be run before any jacketing is installed.

A sample hydrostatic-test setup is shown in Fig. B14.7. A flow water pump is substituted for the pressurizing water pump during the filling of the piping. The water source should provide clean chloride-free water. The system is filled from the bottom to facilitate the venting of all air in the portion of the piping system under test. For sloped piping systems, filling should be done against the slope. Vents must be located at all high points in the piping and should be open during the filling stage. Once it is determined the system is completely liquid filled the vents may be closed and a pressurizing water pump connected to the system in place of the flow pump. The pressurizing pump must have a capacity greater than the allowable leakage of the system. Leakage at the packing glands of valves and pumps is permissible by the codes and is necessary to preserve the life of the packing. However, if this leakage is so great that the test pressure cannot be controlled by being trapped, there will be a problem in running the test. It is not very practical to turn the pressurizing pump on and off to maintain the pressure close to the required level. One solution is to temporarily tighten all the packings to a greater compression than is normally used during regular operation of the system. It may also be necessary to tighten flanges, screwed connections, and other mechanical or gland-type joints to eliminate leakage.

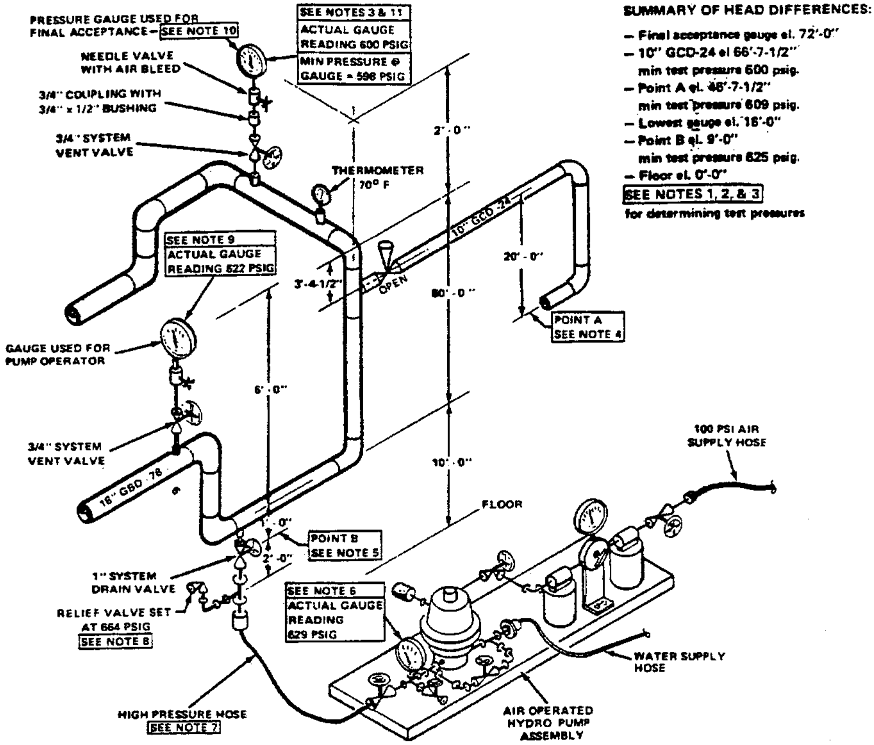

SAMPLE HYDROSTATIC TEST SETUP

PRESSURE GAUGE USED FOR FINAL ACCEPTANCE—SEE NOTE 10
NEEDLE VALVE WITH AIR BLEED
3/4" COUPLING WITH 3/4" x 1/2" BUSHING
3/4" SYSTEM VENT VALVE
SEE NOTES 3 & 11
ACTUAL GAUGE READING 600 PSIG
MIN PRESSURE @ GAUGE = 596 PSIG
THERMOMETER 70° F
2'-0"
SUMMARY OF HEAD DIFFERENCES:
– Final acceptance gauge el. 72'-0"
– 10" GCD-24 el 66'-7-1/2"
min test pressure 600 psig.
– Point A el. 46'-7-1/2"
min test pressure 609 psig.
– Lowest gauge el. 16'-0"
– Point B el. 9'-0"
min test pressure 625 psig.
– Floor el. 0'-0"
SEE NOTES 1, 2, & 3
for determining test pressures
SEE NOTE 9
ACTUAL GAUGE READING 622 PSIG
3'-4-1/2"
OPEN
10" GCD-24
20'-0"
50'-0"
POINT A
SEE NOTE 4
GAUGE USED FOR PUMP OPERATOR
6'-0"
3/4" SYSTEM VENT VALVE
18" GBD-78
10'-0"
FLOOR
100 PSI AIR SUPPLY HOSE
1'-0"
2'-0"
POINT B
SEE NOTE 5
1" SYSTEM DRAIN VALVE
RELIEF VALVE SET AT 664 PSIG
SEE NOTE 8
SEE NOTE 6
ACTUAL GAUGE READING 629 PSIG
WATER SUPPLY HOSE
HIGH PRESSURE HOSE
SEE NOTE 7
AIR OPERATED HYDRO PUMP ASSEMBLY

FIGURE B14.7 Hydrostatic test setup.

Calibrated relief valves should be installed as close as possible to the filling connection and to the low point of the system. The relief valves have two purposes. First they protect against an accidental overpressure during the pressurization process. To accomplish this they must have sufficient relief capacity to pass the full flow of the pressurizing pump (or filling pump if it is also used for pressurizing). Second they protect against an increase in pressure during the test that might result from an ambient temperature increase. The relief valve should be set to prevent the system pressure from exceeding

- The maximum allowable pressure of the lowest rated component in the test boundary
- The maximum allowable seat or backseat pressure of boundary valves
- The maximum allowable set pressures for gagged system-relief valves
- The maximum allowable pressures established by the applicable code or project specification

It is very important to eliminate all trapped air from the piping before pressurizing the piping. Trapped air poses at least three problems in hydrostatic tests. First, the danger of injury is greater if there is a failure with trapped air in the system. Second, if the air is trapped at a piping joint that is leaking, there may not be visible evidence of a water leak. Third, the presence of trapped air will lengthen the time required to pressurize the system. This last effect may be used as an indication of the presence of trapped air. It is also possible to test for trapped air in a piping system by tapping the pipe. A hollow sound indicates the presence of trapped air.

On the other hand there is a potential danger posed by a completely liquid-filled piping system. Normally pressure is trapped in the piping system after the pressurizing pump has raised it to the test level. With a trapped system, an overpressure condition can occur with an increase in ambient temperature. This is most likely to occur if the system is pressurized and trapped early in the day. Later in the day as the temperature increases the system pressure will rise unless controlled. This is because the thermal coefficient of expansion of water is an order of magnitude greater than that of the piping system metal. As the ambient temperature increases, the thermal expansion of the water is greater than that of the piping by at least an order of magnitude. Thus with an ambient temperature increase, the water is compressed by the piping, with a consequent increase in the water pressure that can be dramatic because of the relative incompressibility of water. Because of the potential dangers posed by this phenomenon, the ASME B31.1, section 137.2.6, and ASME B31.3, section 345.2.1, cite precautions to be taken against pressure rise during testing. This is usually done with a pressure-relief valve set as indicated above. Another means of preventing a thermally induced overpressure is not to leave the test unattended. The gauges must be continually monitored and pressure bled off at the vents as needed.

Information concerning the test gauges should be recorded on the test data sheet. Calibration of the test gauges should be performed prior to the start of the test against a master gauge or deadweight tester whose own calibration is traceable to the U. S. National Institute of Standards and Technology (NIST) standards. If the gauge employed is an analog device, the test pressure should ideally occur at midscale but never below 25 percent of full scale. A 1 percent of full scale accuracy device is generally acceptable. If the gauge is a digital gauge it may be used anywhere within the range that the accuracy is specified. This is because the accuracy of a digital gauge is generally a fixed percentage of the reading rather than full-scale reading. After the test is concluded, and the pressure reduced to zero, the zero reading of the gauge should be verified. If the gauge fails to repeat the zero reading by a significant amount, the test reading is not to be trusted.

Conducting the Pressure and Leak Test

Pressurization of the system should be done slowly and in stages only after all trapped air has been eliminated. Visual checks for leakage should be made during the pressurization process. If the system pressure for the examination of leakage is different than the maximum test pressure, the system should be held at the maximum test pressure for the prescribed period before it is reduced to the examination pressure. When examining the system for leakage, any condensation should be wiped away from the system parts to provide a clear and unmistakable view of leakage.

If there are any joints that cannot be visualized during the leak test and it is decided to use a trapped pressure for indication of leakage at the hidden joint, be aware of the following: First, there cannot be any significant leakage elsewhere in the system. Any leaking flanges or packings must be tightened to shut off their leakage. Any leaking joints must be repaired. The shutoff valves and blinds employed to isolate the system boundaries, including the valve to the pressure source, must be leak tight. If all the trapped air has been eliminated from the portion of the system under test, the trapped pressure will increase and decrease substantially as the ambient temperature increases and decreases. This occurs, as explained before, because of the greater thermal coefficient of expansion of the water as compared to the pipe material. A calculation using published values for the linear thermal coefficient and the bulk modulus of water estimates that the pressure will change approximately 40 psi/°F (497 kPa/°C). Any trapped air would reduce the magnitude of this effect. In order for the trapped-pressure test to successfully indicate a leak, the ambient temperature must remain reasonably constant. There is also another temperature-related effect to be aware of. When the piping is first pressurized, the liquid is heated by the compression. This heating immediately increases the liquid temperature above its surroundings. As heat transfer takes place to the surroundings there will be an exponential decline in liquid temperature and pressure. This effect can be recognized by its exponential nature. On the other hand a leak could be expected to cause a decrease in pressure at an approximate constant rate.

Normally the piping system, with the exception of possible leakage at pump or valve packings, should not show any visible sign of leakage. This is a requirement of ASME B31.1. Any sign of leakage at a permanent joint would be cause for repair to eliminate the leakage. However, in certain applications some leakage may be permitted if the consequences of small leakage amounts are not significant. This would have to be by permission of the owner or expressed in the piping system contract.

Draining the System

After the leakage test is completed the system may be drained. The piping may be drained and left to air dry or have hot air blown through it to dry it. Alternatively it may be left filled to prevent rust from forming until the system is put into operation. If the system is left filled after testing there should be warning tags on the valves to advise anyone of the wet layup condition. In draining the system, the following precautions should be observed:

- First make sure all system vents are open.
- Vents on tank-pressure vessels should be open and functional to avoid damage during draining.
- The rate of drainage should not exceed the allowable rate of the building or temporary drainage system.
- Disposal of test liquids containing surface preservatives or other water additives must meet local and project environmental requirements.
- Make certain that temporary piping and instrument connections are relieved of pressure before being disconnected.
- Make sure downstream pressure is relieved in systems containing check valves if the valves were not gagged open.

Cold Weather Testing

Hydrostatic testing with water should not be performed when there is chance for freezing. If the temperature is at or below 40°F, it is still possible to use water if one of the following options is employed to prevent freezing:

- Steam the line.
- Run warm water through the pipe.
- Use electric heat tracing on the line.
- Add antifreeze to the water.

The next to the last option may be a safety hazard and should be avoided unless the piping insulation is completed except for the area around the joints that need to be observed during the test. The last option may not be allowed because of environmental concerns about using and disposing of large amounts of antifreeze. Another liquid with a lower freezing point might also be considered.

Extra care should be used in draining systems in cold weather to ensure there are no remaining pockets of water that may freeze.

Pneumatic Testing

When hydrostatic testing cannot be employed, pneumatic testing may be employed with the approval of the owner of the system. Pneumatic testing may be performed with a gas as the only fluid or with a combination liquid and gas. The latter is called hydropneumatic testing and requires a smaller volume of gas, which reduces the danger associated with the test. However, the persons performing the examination for leakage must know whether each joint is exposed internally to the liquid test medium or the gaseous test medium. This is necessary because in the former case the examiner will look for signs of liquid escape whereas in the latter a soapy mixture must be applied to the joint to reveal signs of leakage.

A combination of pneumatic and hydrostatic testing may also be employed. The system is first tested with low pressure air, usually 25 psig (175 kPa), for major leaks. After any leaks are repaired, the system is hydrostaticly tested at the pressure required by the specified code.

Typically pneumatic tests are conducted with filtered, oil-free air, nitrogen, carbon dioxide, or other suitable nonflammable and nontoxic gas. Test temperatures are typically ambient. In pneumatic testing it is especially important to know that there will be no parts of the system under test that could have brittle failure at the test temperature.

Compressors or gas bottles with regulators may be used as the pressure source. The pressure source must have a capacity in excess of the expected leakage of the system. If the pressure cannot be regulated at the test-pressure levels, it must be trapped in the system. In this case the leakage must be reduced for the test by tightening flanges and packings so that the test pressure may be maintained. Again, a trapped gas system is subject to pressure changes due to variations in ambient temperature, but this change is much less than that for water. If the gas is presumed to behave as a perfect gas, the percentage change of the absolute pressure of the test gas would be the same as the percentage change of the absolute temperature of the gas. Assuming the test is run at 100 psig (670 kPa) and 65°F (18°C), a trapped pressure with no leakage would change 1 psi (6.9 kPa) for a 4.6°F (2.5°C) change in its temperature.

The following safety precautions must be taken when conducting pneumatic testing to reduce the possibility of injury due to rupture in the system or test equipment:

- Correctly sized and calibrated relief valves are installed.
- All persons in the area of the test are notified that the test will be performed.
- All unnecessary personnel are removed from the test area.
- The immediate test area is blocked off or roped off with warning signs so that no one can unknowingly enter the test area.
- The connecting line between the pressure source and the system must be capable of withstanding at least the test pressure and preferably the source maximum pressure.
- It is preferable to double regulate a bottled-pressure source so that if one regulator fails, the source is still regulated below the bottle pressure.
- A properly calibrated test gauge is installed in the system to monitor the pressure buildup.
- If leakage is discovered, the system must be vented before repairs or adjustments are made.
- Always check the test equipment before applying pressure.

During pneumatic testing, the test gauge(s) is normally installed at a remote location from the system undergoing the test. The pressure must be increased gradually to the test pressure and held for a period, usually 10 minutes. Before the examination for leakage is started, the pressure may be reduced to the design pressure, or even as low as 100 psig (690 kPa) for ASME B31.1 per section 137.5.5 if that is lower than design pressure.

A sonic detector may be used for detecting leakage at a safe distance from the system under test if it is considered unacceptable for personnel to be close to the piping under test. Otherwise, a leak detector solution may be applied to joints to see if bubbles develop at the joint, indicating a leak. Acceptable leak detector solutions include:

- A solution of liquid soap and water
- Linseed oil
- Any commercially available leak detection solution

If verification of a leak rate is required, flowmeters or totalizing meters may be used to monitor the test. These may be placed between the pressure source and the piping system.

After the test is completed, the pressure in the system is relieved. Exercise the following precautions when releasing the pressure:

- Make sure any residual downstream pressure is relieved in systems containing check valves that were not gagged open.
- Make sure temporary piping and instrumentation is relieved of pressure prior to disconnecting them from the system.
- Gases should be vented to the atmosphere outside any building

HYDROSTATIC TEST PLUGS

The region of the piping system that must be pressure tested can be isolated from other piping by valves or test blinds. However, in those cases where systems that need to be tested have open-ended pipes or open connections to pressure vessels, another means may be used to seal these openings. Such openings may be sealed temporarily by welding them closed. Alternatively, hydrostatic test plugs are also used to seal the open ends of pipe or pipe connections to vessels if required for a hydraulic test. They have the advantage of eliminating the time to weld a closure and the additional time to cut off the welded closure and repair the pipe end. They may also be used over and over again.

Although these plugs have been described as *hydrostatic* they can also be used with gases. However, the greater danger associated with using these plugs for testing with gas requires stricter adherence to safety rules to avoid any possibility of personal injury should failure occur. Some manufacturers of hydrostatic test plugs recommend the use of safety gags when testing with air. Safety gags are devices that are assembled over the pipe and secured by clamping them around the pipe. At the same time a cable or chain link extending from the safety gag is also secured to the test plug to prevent it from doing any damage should the plug be expelled from the pipe.

There are hydrostatic test plugs that seal against the inside diameter of a pipe or tube as well as those that seal against the outside diameter. Figure B14.1 illustrates the internal or ID (inside diameter) test plug and Fig. B14.2 illustrates the external or OD (outside diameter) test plug. Each cross-section view, and a view showing the installation of the test plug to the pipe. Both the ID test plug and the OD test plug have a seal, made of elastomeric material, which is expanded or contracted, respectively, to seal against the pipe. The plugs also have a positive gripping means to prevent expulsion from the pipe when pressure is applied. In addition, these plugs provide a center port for either filling the pipe with the fluid test medium or venting trapped air. This port may also be used as a connection for gauging the test pressure.

Inside-Diameter Hydrostatic Test Plugs

In the case of the ID test plug of Fig. B14.1, the hex nut on the center shaft is tightened to force the segmented grippers to slide up the conical support surface and expand outward in a radial direction. The gripper segments are constrained to contact the conical support surface by the gripper-retaining spring. The grippers have rows of sharp edges, which contact the inside diameter of the pipe. Once these sharp edges have been forced to contact the pipe, further tightening of the hex nut axially compresses the seal to expand the seal outwardly in a radial direction until the seal is also compressed against the pipe inside diameter. The seal is made of an elastomeric material, which can deform against the pipe surface to create a leak-tight seal. The best designs of hydrostatic test plugs for the inside diameters of pipes can seal at any pressure up to the limit of a pressure that will rupture a pipe of any wall thickness and strength. For example NPS 12 (DN300) inside-diameter plugs of the design of Fig. B14.1 have been tested at pressures as high as 12,000 psig (82,800 kPa) without failure. In this particular case the test fixture rather than the test plug limited the pressure. Smaller plugs have been tested to over 20,000 psi (138,000 kPa). ID test plugs can be made in sizes up to NPS 42 (DN1050). Larger sizes are possible, but the cost increases substantially.

Outside-Diameter Hydrostatic Test Plugs

The outside-diameter test plug of Fig. B14.2 works in the following manner: By rotating the insert piece it is advanced deeper into the body. The movement of the insert displaces the gripper segments toward the narrower end of the conical section of the body thus forcing the grippers inward in a radial direction against the pipe. When the gripper segments contact the pipe, the O-ring contained in the wedge-shaped annular seal also contacts the pipe but only with light contact force. Notice that, in the view illustrating the situation before pressure is applied, that the inside diameter of the wedge-shaped seal does not contact the pipe when the grippers first touch the pipe. From this point, if the pressure is admitted to the pipe, the pressure force will try to move the body away from the pipe end, but at the same time, this slight relative movement acts to further tighten the grippers against the pipe. Simultaneously, the pressure force acting on the wedge-shaped annular seal forces the seal to move away from contact with the narrow end of the grippers and deeper into the body cone. This movement continues until the inside diameter of the wedge-shaped seal is forced into contact with the outside diameter of the pipe. When the inner-diameter surface of the wedge-shaped seal touches the pipe, the O-ring is completely trapped in its groove. Because of this, very large pressures can be experienced without concern that the O-ring will extrude past the O-ring groove regardless of tolerances in the pipe outside diameter.

An advantage of the outside-diameter test plug shown in Fig. B14.2 is that a single plug for one pipe size may be used on any wall schedule. In comparison, a different inside-diameter test plug is most often required for each wall schedule. However, this advantage over an ID test plug is somewhat offset by the greater cost for the outside-diameter test plug.

The outside-diameter test plug of this design has another advantage over the inside-diameter test plug. Hand tightening will generally secure the gripper segments against the pipe, as in the case of a good inside-diameter test-plug design. However, as we have seen above, hand tightening is also sufficient to enable a leak-tight seal for the OD test plug whereas the ID test plug requires tightening with a wrench to make the seal leak tight.

The outside-diameter plug is also capable of having a larger center port for greater filling capacity if needed. Because of this feature, two OD test plugs with a hose connected between them can be effectively used as a jumper to temporarily repair a broken pipe.

Outside-diameter hydrostatic test plugs in this design are available in sizes up to NPS 4 (DN 100) for line pressures up to 10,000 psi (69,000 kPa) for the smallest plug, down to 5000 psi (34,500 kPA) for the largest. Outside-diameter plugs can be made for larger diameters, but the weight and cost become greater than desirable for most applications unless the pressure requirements are considerably lower.

Factors to Consider in Selecting a Hydrostatic Test Plug

A number of different designs of inside-diameter test plugs are available from different manufacturers. Some very inexpensive versions are made without grippers. Plugs, without grippers, rely on the friction force of the seal against the pipe to prevent expulsion of the plug by pressure. Test plugs without grippers are limited to lower pressures and even with lower pressure are unreliable, particularly when the inside surface of the pipe may be slippery. A slippery condition may result from moisture, oils, grease, loose material on the inside of the pipe, or a smooth coating applied to the pipe. The manufacturers pressure ratings for test plugs without grippers apply only for clean dry uncoated pipe and proper tightening. The actual pressure that test plugs without grippers can withstand in slippery conditions is drastically reduced. This is because the friction coefficient between the seal and a slippery pipe may be as much as one or two orders of magnitude lower. It is always safer, regardless of pressure, to use a hydrostatic test plug that has a positive gripping means in addition to the seal. Well-designed grippers eliminate any effect from lubricants that can easily be displaced. However, grippers cannot entirely overcome the bad effects of loose material or smooth and hard surface coatings.

There are only a few outer-diameter hydrostatic test plug designs that are commercially available. In choosing a hydrostatic test plug for pressure testing, whether it be an inside-diameter or outside-diameter plug, the selected plug must at the minimum meet the required pressure rating. In addition, there are a number of very important factors to consider beyond just the initial cost alone. For safety considerations, it is very important to use a design that has at a minimum the following features:

- The test plug should remain firmly in the pipe at any pressure even though it was only hand tightened.

Some plugs must be tightened to a specific torque to prevent expulsion from the pipe at rated pressure or even pressures below the rating. Often the user does not have a torque wrench and therefore has no way of knowing when he has tightened the test plug in accordance with instructions. Other manufacturers do not give a tightening torque but instruct the user to tighten the plug enough to make the grippers completely and firmly contact the pipe. Such an instruction does not provide the user with any means of knowing when he has tightened the plug sufficiently to meet the requirements of the instruction. This is an extremely important safety issue for a first-time user or someone who might have been distracted before tightening the plug completely and never completed the job before pressure was applied. If the user has inadvertently forgotten to tighten the plug securely or simply didn't have the experience to do it properly, the danger is that the plug will eject from the pipe when pressure is applied, unless it is of a design that has the following construction features:

The segmented grippers must grip the pipe completely along their length before the seal is compressed. Designs which employ the grippers to compress the seal cannot have the grippers contact the pipe before the seal does. If the seal contacts the pipe before the grippers, it is possible to have a perfect *pop gun* when pressure is applied.

In addition, a single support cone for the segmented grippers is required to obtain the hand-tightening gripping capability. With the single cone, the entire axial length of the gripper is always in contact with the pipe inside diameter. Furthermore, the applied pressure must be able to displace the cone without interference from the seal in a direction that will force the grippers outward, along their entire length, with a greater force as the pressure increases. Grippers that are supported at either end by separated twin-cone surfaces will experience loosening at one end as the pressure increases. Furthermore, if twin-cone supports are utilized in a design where the grippers are also used to compress the seal, only the gripper end that loosens with pressure will contact the pipe, except at very high-tightening torque. Therefore, at some high pressure, which depends on how tight the plug has been installed, the gripper, supported by twin cones, will start to loose its grip.

- The test plug should remain firmly gripped in the pipe even at pressures up to those which cause bursting of the pipe.

A dual cone support for the grippers cannot accomplish the above objective because, as pressure is applied, the displacement of the plug expands the gripper segments outward at one end of the grippers and allows the grippers to retract away from the pipe inside diameter at the other cone support. In such a design, increased pressure does not cause increased gripper force along the entire axial length of the gripper.

Another design feature necessary to accomplish this objective requires that the compression of the seal and expansion of the grippers must be independent of each other. Designs that use the grippers to compress the seal cannot accomplish this objective.

In the case of OD test plugs it is not always practical to meet this objective. This is because it is expensive and cumbersome to make the OD test-plug body large enough to withstand the combination of the gripper and pressure loading.

- The seal should never contact the pipe during installation or removal.

Some test-plug designs incorporate seals that interfere with the pipe even before installation and tightening. Sharp edges on the open end of the pipe can damage a seal that is already larger than the pipe before installation. In addition, if the seal interferes with the pipe during installation, a large force is required to push the plug into the pipe. Alternatively, some users of plugs that have seal interference lubricate the seal to make it easier to install the plug. A test-plug design which has a seal that initially interferes with the pipe is also less tolerant of a wide range of pipe tolerances. A preferred inside-diameter test-plug design always has a seal that is smaller than the pipe inside diameter when the plug is being installed and removed.

- A test-plug design should never employ a fixed O-ring to seal the plug against the pipe.

First, a fixed O-ring would have to interfere with the pipe before it was installed in order to work at all. Second, having pipe and tube tolerances means that the O-ring interference will vary, depending on the tolerance. In the worst cases, the O-ring will have major interference with the largest pipe and be difficult to install. On the other extreme, with the smallest pipe, the O-ring will have little interference. Furthermore, with the smallest pipe, there will be a large gap between the plug parts and the pipe, allowing the O-ring to extrude into this gap under high pressure and fail. O-ring manufacturers recommend that the gap between the male and female parts be limited to a few thousandths of an inch for the highest pressure ratings to avoid extrusion of the O-ring out of its groove, and consequent failure.

- Any test plug should be able to function with only two gripper segments.

This is very important for cases where the pipe has a very out-of-round condition. In such a case it is likely that only two of the gripper segments will contact the pipe when pressure is first admitted.

- The test plug should be easily removable from the pipe after pressure is bled off.

Some gripper designs provide close to a locking angle, and, because of this, a severe impact is required to loosen them from the pipe after the test. In other cases the seal becomes wedged in the small space between the pipe and the test-plug parts, making it very difficult to remove the plug after the pressure is removed. This can be particularly true of test plugs that use low-durometer seals. However, some test-plug designs will work only if the seal is made from a low-durometer elastomer.

Care in the Use of Hydrostatic Test Plugs

Safety demands care in using any device to seal the open end of a pipe in order to run a pressure test. First verify that the pressure rating of the plug is greater than the test pressure to be used for the test. Next, the user must inspect the pipe end. It should be verified that the pipe diameter is within the range of dimensions that the plug is designed for. For example, if the plug seals against the inside diameter, that is the dimension that must be checked. Also, the surface against which the seal engages must be sufficiently free of defects for the seal to work. Finally, check the surface against which the grippers engage. This surface should be clean and dry. The pipe should not have a smooth and hard coating. Furthermore, there must not be any loose scale on this surface. If the grippers engage a loose surface scale as opposed to the pipe itself, the bond between the scale and pipe may break when pressure is applied, allowing the plug to slip.

Next examine the plug itself. It must be in good working condition. If there are signs of tearing of any of the gripper teeth they should be replaced. Also check that there is freedom of movement between the grippers and the supporting conical surfaces. Low friction between these two surfaces is essential to safe operation of the test plug. Sometimes users will find that a test plug was not cleaned and dried after the last use. If there are any signs of sticking, these parts should be cleaned and lubricated. Examine the hex nut and the threads on the shaft(s). They must be free of any damage or wear, and the hex nut must turn freely.

When installing the plug into the pipe always be sure to follow the manufacturer's recommended installation instructions. Always clean and properly store a test plug after each use.

HYDROSTATIC TEST PLUGS SUITED TO TESTING A SINGLE WELD

In those cases where a piping job is a repair, modification, or expansion of an existing system, it is very desirable not to have to fill and pressurize the entire piping system just to check the new welded joints. A device called a flange test plug shown in Fig. B14.3 can test a single weld between the pipe and a weld-neck flange or slip-on flange. Figure B14.3 shows cross-sectioned drawings of the plug before installation and the plug installed in piping. The flange test plug is inserted into the pipe after the weld is completed and bolted to the weld-neck flange. It is very important that the seal and mating parts are small enough to fit past any weld projection during the insertion and removal of the test plug. The seal, located behind the weld, is expanded in a radial direction to seal against the pipe by compressing the seal axially. The axial compression is accomplished by tightening the hex nut on the center shaft in order to squeeze the seal between the back washer and front washer. Flange test plugs larger than NPS 8 (DN200) have multiple shafts, which must all be tightened evenly to compress the seal.

Once the plug is installed, the fluid test medium can be admitted to the space between the flange and the seal against the pipe through ports located in the flange face. These ports also permit venting of the trapped gases for all positions but vertical up. In the latter case the trapped gas may be vented by temporarily relaxing the seal. Once the space surrounding the weld is completely filled with the test medium, it may be pressurized and the exposed weld joint visually examined for any signs of leakage. It is also possible to run a trapped pressure test with such a device. However, the same temperature effects as discussed before must be taken into account.

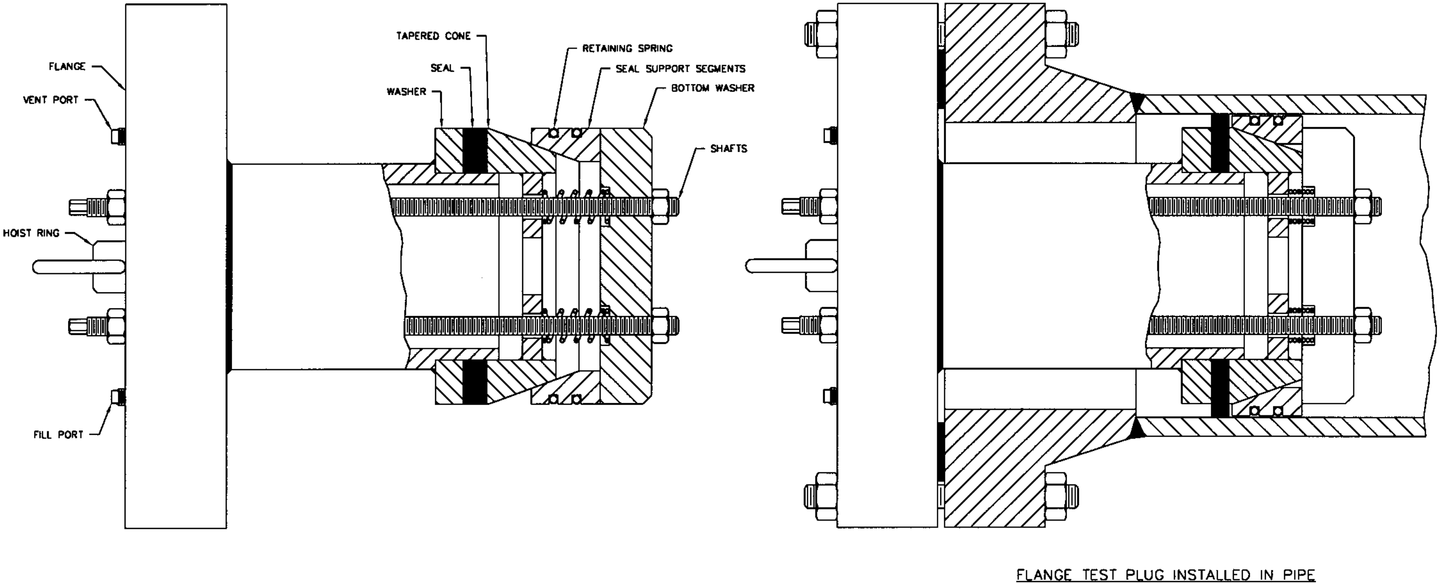
TAPERED CONE
RETAINING SPRING
FLANGE
SEAL
SEAL SUPPORT SEGMENTS
VENT PORT
WASHER
BOTTOM WASHER
SHAFTS
HOIST RING
FILL PORT
FLANGE TEST PLUG INSTALLED IN PIPE

FIGURE B14.8a Special high lift flange test plug. (*Courtesy of Expansion Seal Technologies, Harleysville, PA.*)

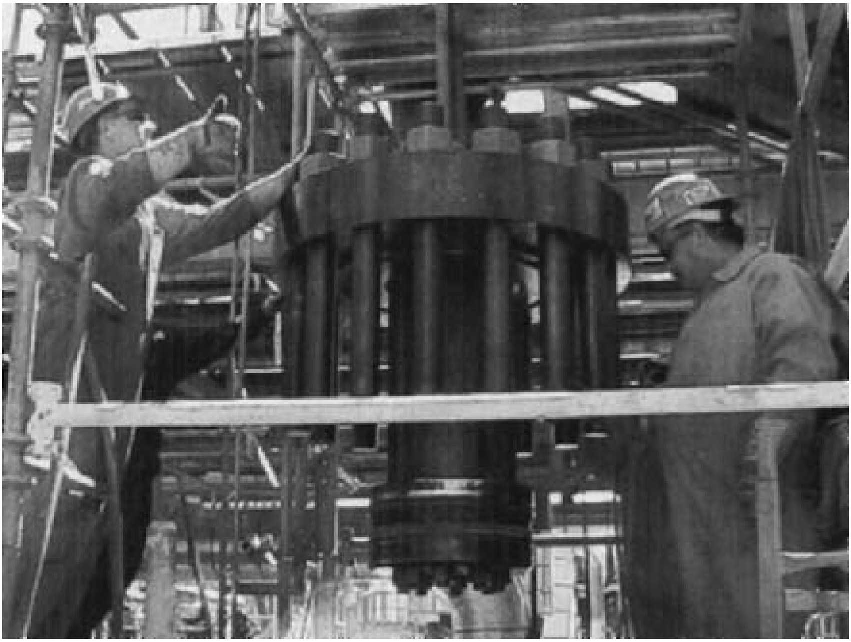

FIGURE B14.8b Special high lift flange test plug being installed. (*Courtesy of Expansion Seal Technologies, Harleysville, PA.*)

The flange test plug can substantially reduce the testing time and cost in a plant expansion or modification. In addition, if the test fluid is contaminated by residue in the piping, it is necessary only to dispose of a small amount of fluid test medium in an environmentally safe manner, as compared to filling the entire piping system. This capability also overcomes the argument sometimes advanced that a single weld should be subjected to a radiographic examination rather then be pressure tested as the code requires. This argument for taking a different approach than the code requires has often been made because of the inconvenience and cost of filling and pressurizing the entire system.

There have been some flange test plug applications where the opening in the weld-neck flange is smaller than the pipe on the other side of the weld. For example, this may occur when the flange rating is considerably higher than that for the pipe. There have also been applications for hydrostatic test plugs where these must fit through a narrow entrance and then seal against a larger diameter. Both of these applications can be accommodated with the special high lift design shown in Fig. B14.8a. Figure B14.8b shows a photograph of a 24 inch (DN 600) special high lift flange test plug being installed in a west coast refinery. Figure B14.8a shows cross-section views before and after the plug has been installed and adjusted so that the seal contacts the pipe. After the flange test plug has been inserted into the piping and the flanges have been bolted together, the hex nuts at the flange end are tightened gradually in sequence. Initially, during the tightening process, the segmented supports are urged to ride up the adjoining conical surface and expand outward in a radial direction. Once these segmented supporting surfaces expand to a diameter slightly less than the internal diameter of the pipe, further radial expansion of the segmented supports is prevented because the bottom washer engages the end of the cone. From this point, further tightening compresses the cone-shaped part against the seal to compress the seal axially and expand it outward until it seals against the pipe. The result is shown in Fig. B14.8a, identified as ''Flange test plug installed in pipe,'' and shows that the segmented pieces now act as back-up supports for the seal. The testing fluid medium may be admitted through one of the fill ports in the flange while the other serves to vent air from the space between the expanded seal and the flange. Once the liquid fill has been completed and is pressurized, any bending of the exposed portions of the seal due to pressure is resisted by the segmented supports. The use of this design has enabled a NPS 24 (DN 600) flange test plug to fit through an opening that was ⅞ in (22.23 mm) smaller than the diameter of the pipe against which the seal worked. In this application, the test pressure was over 2250 psi (15,525 kPa). Upon completion of the pressure test, the hex nuts are loosened, permitting both the seal and the seal-support segments to retract to their original size before installation. Removal of the flange bolts will now permit the flange test plug to be withdrawn through the smaller opening of the weld-neck flange.

A variation of the design of Fig. B14.3, called the flange-weld plug, may be used to align the weld-neck flange to the pipe and complete the weld prior to testing the weld. The fill ports may be used for inert-gas purging on the inside of the pipe during welding. The flange weld plug, unlike the flange test plug, has a center port for sensing pressure buildup back in the piping. If pressure were to build up behind the flange weld plug before the weld was completed, a dangerous condition wherein the plug might be ejected could occur. Gauges connected to the sensing port are used to warn the welder of any impending problem.

A safer design than the flange weld plug would be to use grippers in conjunction with the seal, as shown in the dumbbell plug of Fig. B14.4. This plug, unlike the hydrostatic test plug, utilizes twin cones supporting the gripper segments to resist movement of the plug in either direction due to unbalanced pressure forces. In case of an unexpected pressure buildup behind the seal, the grippers would function to prevent the plug from being ejected before the weld was completed. However, because of the twin-cone construction, the assembly must first be tightened to the rated torque before pressure is admitted in order to be certain the plug will not move. A single cone gripper would be an improvement.

Flange test plugs and flange weld plugs are available in sizes from NPS 1 to 36 (DN 25 to 900) and with flange ratings up to class 600. Higher ratings and sizes are possible.

FREEZE PLUGS

Thomas J. Bowling, P.E.
Manager
Pipe Repairs, Inc.
Alvin, Texas

Cryogenic freezing is a cost-effective technique for solidifying liquid in a pipe to form a pressure-resistant plug so that maintenance and pressure testing can be performed without shutting down the whole system. This technique for creating a freeze plug has been used for over 30 years in process plants, cross-country pipelines, and nuclear submarines. Most applications are on water, although other liquids may be frozen effectively. Plugs as large as NPS 48 (DN 1200) have been used. Beyond this size, this method of isolation is not economical. Typical applications are

1. Piping repair
2. Valve replacement
3. Leakage and pressure testing
4. Secondary protection on water lines during nuclear fuel changes

The formation of a freeze plug is typically accomplished by circulating liquid nitrogen in a stainless, aluminum, or fiberglass jacket surrounding the pipe. See Fig. B14.9a, showing a typical installation for creating a freeze plug. The nitrogen inlet is located in the center of the jacket behind a centrally located thermocouple. There are two nitrogen vents as well as a drain connection shown. Also, shown in Fig. B14.9b, is an end view where the actual freeze plug can be seen. The liquid nitrogen extracts heat from the freeze-jacket walls, pipe walls, and the liquid within the pipe. The heat absorbed by the liquid nitrogen evaporates some of the nitrogen, and this heat is carried away from the jacket by the nitrogen-gas exhaust from the jacket. The nitrogen gas leaving the freeze jacket must be conducted away from any confined space where personnel are present. Nitrogen is heavier than air, and it is surprisingly easy to produce low-oxygen levels that can lead to asphyxiation. A few breaths of concentrated nitrogen can cause a loss of muscle function. Immediate

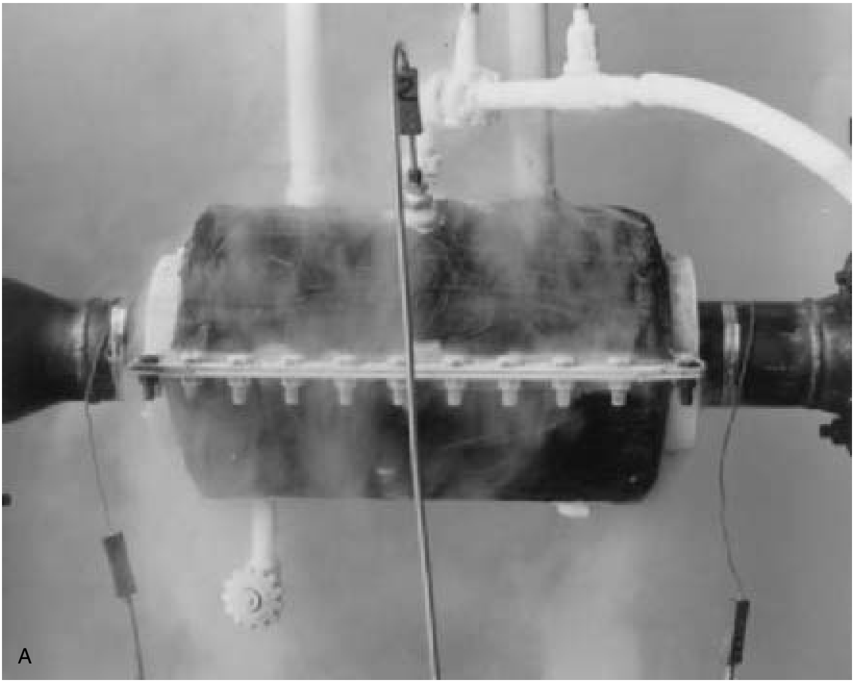

FIGURE B14.9a Typical installation for creating a freeze plug. (*Team, Inc., Alvin, TX*)

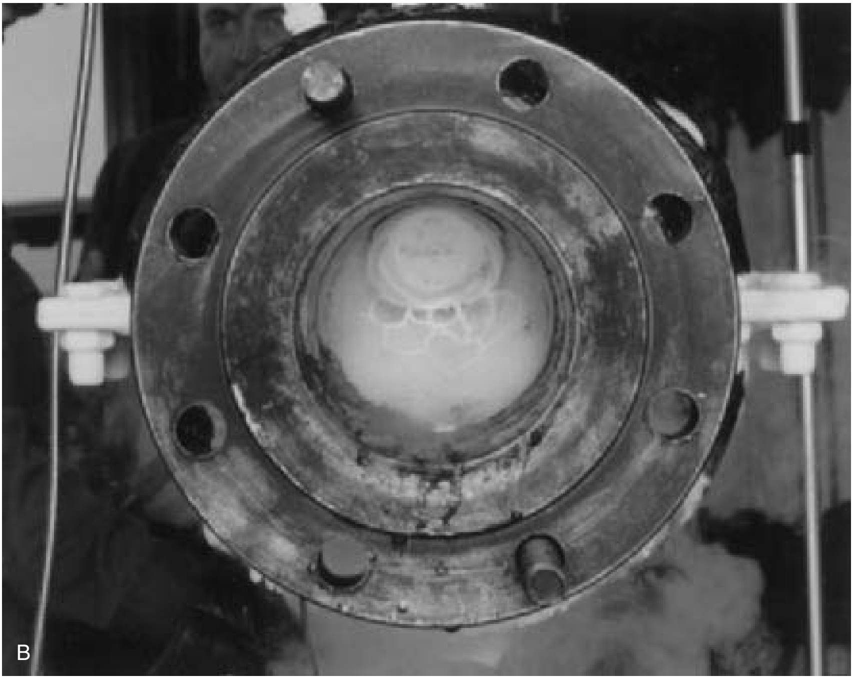

FIGURE B14.9b End view in which actual freeze plug can be seen. (*Team, Inc., Alvin, TX*)

cardio-pulmonary resuscitation is required to restore oxygen to the lungs and allow recovery.

The time required to form a freeze plug and the amount of liquid nitrogen required for a particular application may be estimated in advance using *Freeze Stop Tables* provided by the manufacturer of the freeze plug system. See Table B14.3 for an example. Several factors in addition to pipe size influence the amount of nitrogen needed. They are: starting liquid temperature, liquid convection currents and flow in a connected pipe, high ambient temperature and winds, flow in the pipe if any, and radiation from the sun or surroundings.

The primary indication of plug formation is the temperature of the pipe within the freeze jacket. For water, the temperature should be in the range of 0 to −20°F (−18 to −29°C). The secondary indication of success is a uniform band of frost formed completely around the pipe adjacent to the jacket. However, if a liner or process liquid sludge insulates the inside of the pipe, both may be false indications.

Because the liquid expands upon freezing, once the freeze plug isolates a volume of liquid, further freezing of liquid will serve to compress the remaining trapped liquid. The pressure in the trapped liquid can rise to a dangerous level unless relieved by opening a valve, cracking a flange, or other controllable means. On the other hand, as the temperature of the freeze plug drops below the freezing point, microcracks will form in the ice because the ice shrinks faster than the pipe. However, as soon as liquid enters the microcracks it will freeze and seal them.

The best way to test a freeze plug is to create a pressure difference across the plug, and monitor the pressure in the region trapped by the freeze plug for a change

TABLE B14.3 Liquid Nitrogen Requirements for Freeze Stop

	Column I		Column II		Column III		
	X		----------X		x		
Pipe diameter	Time to freeze, hour	Volume, gallons	Time to freeze, hour	Volume, gallons	Time to freeze, hour	Volume, gallons	Volume per hour to hold
1	.4	3	.3	2	.2	1.06	1.5
2	.8	9	.5	7	.3	3	1.5
3	1.5	19	.9	13	.5	7	1.5
4	2	57	1.3	39	.7	20	5
5	3	89	1.9	60	.9	30	6
6	4	124	2.5	83	1.3	42	7
8	6	340	4	225	2	114	9
10	9	525	6	350	3	175	15
12	12	961	8	641	4	320	25
14	14	1152	9	768	5	384	36
16	17	1924	12	1283	6	642	40
18	21	2425	14	1617	7	808	52
20	26	3652	17	2435	9	1217	68
22	31	4410	21	2940	10	1470	87
24	36	6188	24	4126	12	2063	127
26	42	7249	28	4832	14	2416	136
28	48	9690	32	6460	16	3230	145
30	55	11172	37	7448	19	3724	159
32	63	13607	42	9073	21	4536	171
		1 gallon = 3.785 liters					
		180 liters = 47.6 gallons					
Water at 68°F				Hold temperature −292°F			

that would indicate a leak. Freeze plugs have been tested to very high pressures. Generally the pipe will fail before the failure of a fully formed plug. This is due to the high strength of the bond between the ice and the pipe. However, in the interest of safety, any test pressure must be safely below any expected minimum value of brittle failure.

The liquid must wet the pipe to obtain a strong joint between the freeze plug and the pipe. Additionally, the plug strength increases with plug length. However, freeze jackets longer than three pipe diameters should not be employed due to the possibility of forming a double plug. A double plug can cause failure of the pipe within the jacket because of the very high pressure that is produced between two plugs that are close to each other.

In order to form a freeze plug that seals, the pipe must be full of liquid. An air bubble in the top of the pipe makes it impossible to form a freeze plug across the entire pipe diameter. Hydrocarbons with light ends that gas when depressurized can prevent the formation of a complete plug.

Also, hydrocarbon-based liquids, unlike water, do not have a specific freezing point temperature. Instead, they have a freeze range and become solid through a gradual increase in viscosity. Generally, if there is a question about the freeze point and characteristics of a fluid, a test sample may be frozen and evaluated.

The liquid should be stationary at the time of the freeze. There is a critical flow rate and pipe diameter above which it is impossible to achieve a fully closed plug. The critical flow rate is determined by several factors in addition to pipe size. These are pipe orientation, pipe material and thickness, pipe diameter, inlet fluid temperature, fluid freezing temperature, pressure-head-creating flow, and flow rate. Generally it is not possible to freeze plugs under flowing liquid conditions unless the pipe is small and the flow and water temperatures are both low.

It is sometimes difficult to know if there is flow in the line during a freeze unless there is an obvious leak. Undetected flow is probably the most common cause for an unsuccessful freeze. If freezing is taking longer than expected it may be possible to prove that this is due to flow in the pipe. Measuring the pipe wall temperature on both sides of the freeze plug does this. A difference in wall temperature on either side may indicate flow in a direction toward the lower temperature. Convection currents will delay the formation of a freeze plug and can sometimes prevent it from forming completely. Eddy currents generated in a branch line by flow in a main line can also interfere with the formation of a freeze plug in the branch line. Therefore it is best to locate a plug in a branch line as far away as possible from a flowing main line.

The pipe will contract in the longitudinal direction while the freeze plug is formed. This contraction will induce stress in any restrained section of pipe. The amount of contraction can easily be calculated to determine if resulting stresses will be too high to be safe. The freeze plug should not be located in any pipe fittings, valves, or other operating components. Although it is not recommended to locate freeze plugs at a pipe weld, freeze plugs have been successfully installed at pipe welds after adequate inspection and evaluation of the weld. The freeze area on the pipe should be inspected visually and nondestructively before a freeze. If significant flaws are detected, another section of the pipe should be chosen.

Once the freeze plug has been successfully formed and tested, the downstream side of the plug may be drained to remove the remaining liquid. It is best to maintain the freeze operation for another 15 to 30 minutes before opening the pipe and making repairs or changes. The freeze must continue to be monitored while piping revisions or repairs are made. This is done by watching the temperatures at the ends of the freeze jackets and making adjustments to the nitrogen flow to maintain the freeze plug until all work on the pipe is completed. No hammering or impact loads should be applied to the piping during a freeze. If it is necessary to unbolt a flange it should be *hot bolted* before freezing. Hot bolting consists of removing the studs and nuts one at a time and cleaning and lubricating them or replacing them with new studs and nuts. Pressure surges should also be avoided during the freeze.

When the required work on the piping is complete, and the revisions or repairs have been tested, the plug(s) may be thawed. The thawing must be done so that the plug does not move and cause damage to the piping. The pipe should be completely liquid filled on both sides of the plug and the pressure equalized across the plug(s) during the thawing operation. These two actions reduce the ability of the plug to move during thawing. The liquid nitrogen must be drained from the freeze jacket(s) and the jacket(s) removed from the pipe to allow the plug(s) to thaw naturally. There is risk involved in warming the pipe from the outside to speed up the thawing. External heating of the pipe at the freeze-plug location could melt the interface between the plug and pipe wall, allowing the plug to move. This is most dangerous if the pipe is vertical, as the buoyancy of the plug would cause it to move upwards.

PART • C

PIPING SYSTEMS

CHAPTER C1
WATER SYSTEMS PIPING

Michael G. Gagliardi
Manager of Projects
Raytheon Engineers and Constructors, Inc.
Lyndhurst, NJ

Louis J. Liberatore
Supervising Discipline Engineer
Raytheon Engineers and Constructors, Inc.
Lyndhurst, NJ

INTRODUCTION

General Description

Water-distribution systems that serve populated areas and industrial complexes, including offices and light and heavy industry, are classified broadly as being of the loop, gridiron, or tree types. Figure C1.1 describes these three types. Within the broad concept, there may be a combining of all three types used as the building blocks for the overall system.

In the *loop system,* large feeder mains that surround areas many city blocks square serve smaller cross-feed lines connected at each end into the main loop. See Fig. C1.1a.

In the *gridiron (or grid) system,* the piping is laid out in checkerboard fashion, with piping usually decreasing in size as the distance increases from the source of supply. See Fig. C1.1b.

In the *tree system,* there is a single trunk main, reducing in size with increasing distance from its source of supply; branch lines are supplied from the trunk. See Fig. C1.1c.

The grid and loop systems provide better reliability because of their multiple paths. Grid and loop systems are often backed up with feeder pipes leading directly from the pumping station to remote distribution centers serving to bolster the supply to meet increased demands with growth of population.

Water distribution systems are made up of pipes, valves, and pumps through which water is moved from the source to homes, offices, and industries that consume the water. The distribution system may include facilities to store treated and un-

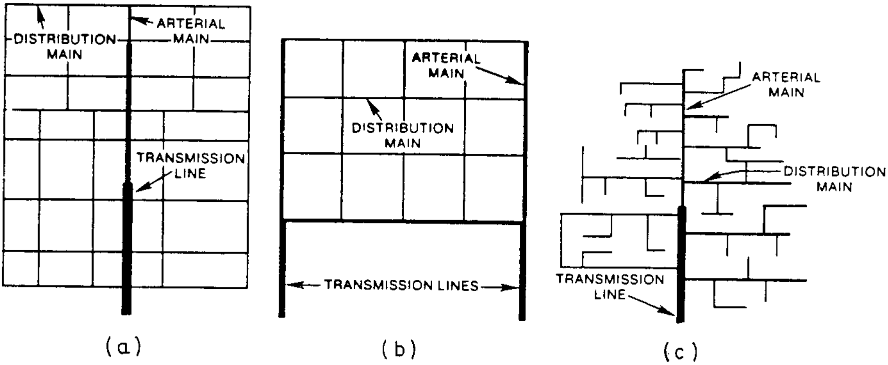

FIGURE C1.1 (*a*) Loop system, (*b*) grid system, (*c*) tree system.

treated water for use during periods when demand is greater than the source can supply and when special service requirements must be satisfied.

The distribution systems are subject to the requirements of local ordinances and state laws and health regulations. Two important requirements of any water distribution system are that it supply each user with a sufficient volume of water at adequate pressure; and for treated water systems, that the quality of the water be maintained by the treatment facility and distribution system.

Types of Water Piping Systems

There are four general types of piping systems in water distribution utilities: transmission lines, in-plant piping systems, distribution mains, and service lines. *Transmission lines* carry water from a source of supply to the distribution system. *Distribution mains* are the pipelines that carry water from transmission lines and distribute it throughout a service area, e.g., a community or industrial complex. *Service lines* are small diameter pipes that run from the distribution mains to the user.

The prime objective of a distribution network is to supply a sufficient quantity of water to all parts of the system, at pressures adequate for the requirements of the users at all times and under all conditions of their demands, including sufficient flow and pressure for fire-fighting purposes. Therefore, the selection of pipe sizes, material, geometry, and configuration in distribution networks is influenced more by the necessity of maintaining adequate water pressure than by the economics of pumping costs.

The common industrial or power applications of water systems are condenser-circulating water and service cooling-water systems. A condenser uses circulating water to condense steam exhausted from the plant's turbines. In a large steam-power plant this requires a considerable amount of water to be continuously circulated. Consequently, since the circulating water directly affects the plant's efficiency and reliability, an efficient, reliable, and economical circulating water system is required.

Service water systems provide cooling water to a plant's components, heat exchangers, and other services required by the plant. Due to current environmental regulations, recirculation-type systems in which the same water is used repeatedly must be applied in most cases. Means of cooling the water is provided in the form of cooling towers, spray ponds, or cooling ponds. Initial fill and makeup water, to compensate for evaporation, leakage, and blowdown, has to be provided from a river, lake, sea, or other large natural body of water. Some service water systems and, in nuclear plants, emergency service water systems may be once-through-type systems.

A siphon system is one in which the siphon principle is employed to carry the water through elevated parts of the system, such as the condenser, in order to reduce the pumping power required. These elevated portions of the water system operate under a partial vacuum. A pressure system is one in which the water flows under a positive head throughout. This system is generally used with recirculating systems, such as with cooling tower installations.

Vertical pumps set in an intake basin are usually the most suitable for circulating water and service water applications. The complexity of the intake structure is naturally affected by the number of pumps necessary for the system. Reliability points to the use of at least two pumps. The design criteria for the plant will dictate the final choice, whether it will be two pumps at two-thirds capacity each, or one-half capacity each, or some other number of pumps and load distribution. The capacity selection is the subject of a careful analysis, taking into account site space and hydraulic conditions, water requirement, variation of pumping head, the best efficiency range of the pumps, and the costs of various layouts and options.

The intake chambers for vertical pumps require careful design for good pump operation. The design must bring about a uniform and undistributed flow of water to the pump without whirl. Most pump manufacturers and Hydraulic Institute have design suggestions for intake chambers for their particular pumps. There are no standard solutions to vertical-pump intake problems, so each vertical-pump installation should be studied individually.

Booster pumps may be required to ensure pressure to most distant higher elevation points without overpressurizing the lowest components. Horizontal pumps are generally suited for this application.

The intake piping to the suction of horizontal pumps should be designed so as to avoid air pockets. Also, the water-flow velocity should be made uniform over the suction inlet area by placing bends as far as possible from the pump inlet.

Discharge Structure. On the discharge end of once-through cooling water systems, an underwater (or sealed) discharge must be provided to prevent entry of air into the piping, which would otherwise break the siphon action at the condenser. For complex systems an extensive load analysis is performed to establish a seal elevation that is adequate for all operating conditions. Refer to the section on hydraulic grade lines. One means of providing this seal is through the use of a seal well, that is, a basin with a water level controlled by an overflow weir. The seal-well water level regulates the height of the siphon recovery, and it is the final elevation to which the system circulating pump delivers the water.

Beyond the seal well, the discharge into the river or other body of water must be done in such a way that the discharge velocity is dissipated without washing away banks, tearing up the bottom, undermining the discharge piping, or permitting uncontrolled recirculation to the intake.

These systems require attention to problems such as air binding and water hammer, as discussed in this chapter.

A concern about maintaining reliability in plants utilizing raw water for cooling is the accumulation of microbiological growth and sediment accumulation (silting). A critical concern in nuclear plants is keeping piping and components free of clogging or bacterial attack. Strong prevention and maintenance programs are the norms for important systems.

The design of high-temperature, high-pressure piping such as boiler feedwater (FW) systems require considerable experience and study. Refer to Chap. B2. Besides those typical hydraulic problems inherent in lower pressure, lower temperature systems, concern for flashing cavitation and the problems associated with handling two-phase flow and large-system transients are encountered. Refer to Chap. B8 and App. E9.

Velocities ranging from 10 to 25 ft/sec (3 to 7.6 m/sec) in high-pressure and high-temperature water systems are normal, as the fluid is usually high-quality, low-solids water. Piping material can range from carbon steel, such as ASTM A106 on the low-temperature end, to carbon, molybdenum and chrome, and molybdenum alloy steels such as ASTM A335 after the high-pressure heater temperature above 750°F (399°C). FW piping is usually seamless and employs welded joints. Flanged connections, where required, must use a temperature-resistant gasket. Refer to Chap. A7.

Network Analysis of Distribution Systems

The complexity of the analysis required for a well-designed water-distribution system is comparable to that of utility electric power networks. There are several procedures that may be used for the analysis of flow in complex piping networks, such as the Hardy-Cross method. All such methods involve the solution of a flow problem considering head losses of a complex distribution network resulting in extremely tedious and time-consuming trial and error calculations. With the development of state-of-the-art computer hardware and software, complex network problems involving hundreds of branches can be solved in a relatively short time. Illustrative Example C1.1 presents a sample problem using the Hardy-Cross method of flow-network solution.

Illustrative Example C1.1

1. Make a skeleton drawing of the network. Indicate by appropriate arrows the points of constant flow input or output, constant head input or output (see Fig. C1.2).

2. Number all loops in the system in arbitrary sequence. Do not include "loops around loops." For example, in Fig. C1.3 there are two loops, not three. The large loop (*abcdefg*) is not numbered. The two basic loops (*abfg* and *bcdef*) are numbered.

3. Number each line. A line has two ends. An end may be a point at which water is drawn from or added to the system, one at which pipe characteristics

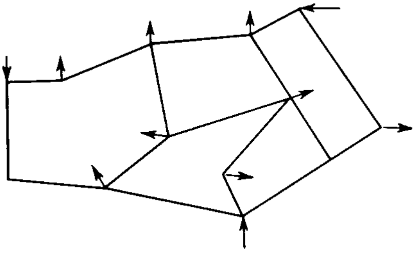

FIGURE C1.2

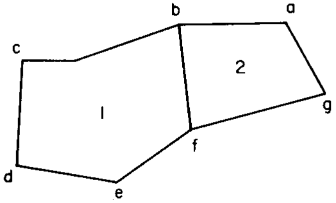

FIGURE C1.3

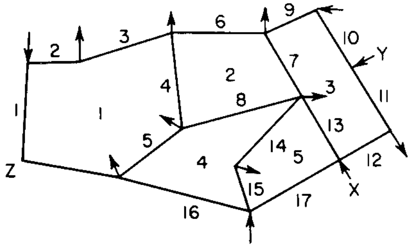

FIGURE C1.4

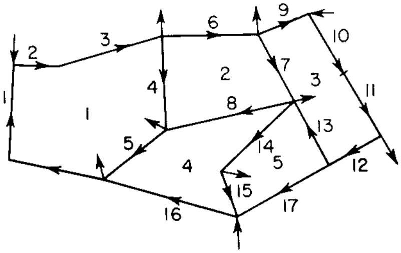

FIGURE C1.5

change, or a tee joint. For example, in Fig. C1.4, the point *x* is the meeting of three lines, not two; point *y* is the meeting of two lines where an NPS 8 (DN 200) pipe joins a NPS 10 (DN 250) pipe; point *z* is simply a bend in the single pipe and is not the end of any line, although it could have been specified as one, if desired. Figure C1.4 shows the complete numbering of the system shown in Fig. C1.2. Note that each line is numbered once and only once, even though it may be in more than one loop. Also note that the numbering is serial; that is, if there are *n* branches, each of the numbers from 1 to *n* must be used in the numbering.

4. Assign a base direction. Put an arrow on each line in loop 1, indicating the clockwise direction (as shown in Fig. C1.5). Then put an arrow on each line in loop 2, indicating clockwise direction, except where a line which previously has been assigned a direction is encountered. Then the original assignment is not changed. In Fig. C1.5, line 4 is a member of loop 1 and also of loop 2 but has been given a base direction of loop 1. The line 4 assignment is not changed. This process is continued for every loop in the network, an arrow being assigned in a clockwise direction whenever it has not been assigned previously.

5. In water-distribution systems, the situation often is encountered where system pressure must be raised by the use of booster pumps in series with the supply pipeline. If the higher pressure area is connected to the remainder of the system at one point only, the two pressure-zone networks are hydraulically independent problems. If the pressure zones are connected at two or more points, the booster pumps must be included in the appropriate loops.

For all loops containing booster pumps, an unbalanced or residual head H_0 must be determined. This is done by algebraically summing the assumed constant head changes at the boosters in a clockwise direction.

Note that head *losses* are considered as positive in sign, so proceeding from the suction side of a pump to the discharge side gives a negative head loss.

Following the hydraulic analysis, a check should be made to assure that the pumping head assumptions are sufficiently accurate. The resulting flow-rate values should allow optimum hydraulic design of the booster-station installations.

6. Additional "pseudo-loops" must now be added to the list if there is more than one constant head input (see Fig. C1.6). If the number of such inputs

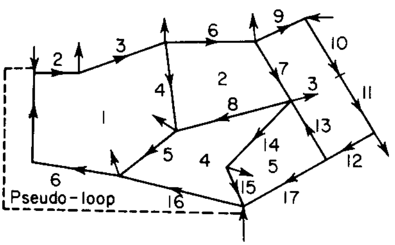

FIGURE C1.6

is m, trace $(m - 1)$ paths between inputs in the same manner in which the loops were traced, making sure that each constant head input is used at the end of at least one of these loops. If the direction of procedure is from the lower to the higher input in each path, H_0 will be the positive difference in the head loss between the two inputs. If booster pumps are encountered, the head change across such pumps must be algebraically added to the head difference between the inputs in order to obtain the H_0 for the pseudo loops.

When the listing of all the loops has been completed (including the consideration of booster pumps), the work should be carefully checked, preferably by a second person, since any errors will completely upset the calculations.

Note that pseudo loops do not introduce any new lines. Note also that each pseudo loop must be assigned its own number.

7. The only remaining task is to supply initial flow values and pipe characteristics which the computer can use as starting values for the calculations. The only restriction on these values is that they satisfy the mass balance condition at each junction. That is, the sum of the flow *into* a junction must equal the sum of the flows *out* of the junction. For example, Fig. C1.7 shows the junction of lines 3, 4, and 6; flows of 50 gpm in line 3 and 100 gpm in line 6 would satisfy the condition.

Proceeding in this manner, balance every junction in the network, working toward the variable-flow (constant-head) inputs which can take up the slack. When all flows are specified, check the accuracy of the work by summing the inputs and outputs. If these sums are unequal, some computational error has been made and must be corrected. The complete schematic for this system is shown in Fig. C1.8. This schematic includes the assumed starting values of the flows.

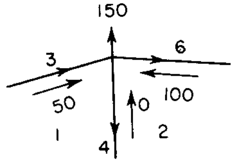

FIGURE C1.7

Several personal computer (PC)–based and main-frame computer software programs are available that handle steady-state and transient-flow analysis in piping systems. Refer to App. E9 for list of computer programs. Any system configuration, including a variety of components such as storage tanks, pumps, check valves, pressure regulating valves, variable pressure supplies, among others, can be analyzed. These programs can also utilize extended-period simulations of a piping system over a long period of time. These simulations can assess the effect of varying water levels in tanks or reservoirs and can take into account such occurrences as pump operation controlled by water levels or pressure levels. Demand patterns can be varied throughout the simulation to provide a set of solutions for study. These programs can handle any liquid using English and Standard International (SI) units.

In all flow network problems the following conditions must be satisfied:

1. The algebraic sum of the pressure changes around each circuit must be equal to zero.
2. The algebraic flows into and out of each junction must equal zero.
3. The proper relationship between head loss, h, and discharge flow, Q, must be maintained for each pipe.

Parallel and Series Piping. A combination of two or more pipes connected so that the flow is divided among the pipes then joined again, is a *parallel-pipe system*. In *series pipes* the same fluid flows through all the pipes, and the head losses are

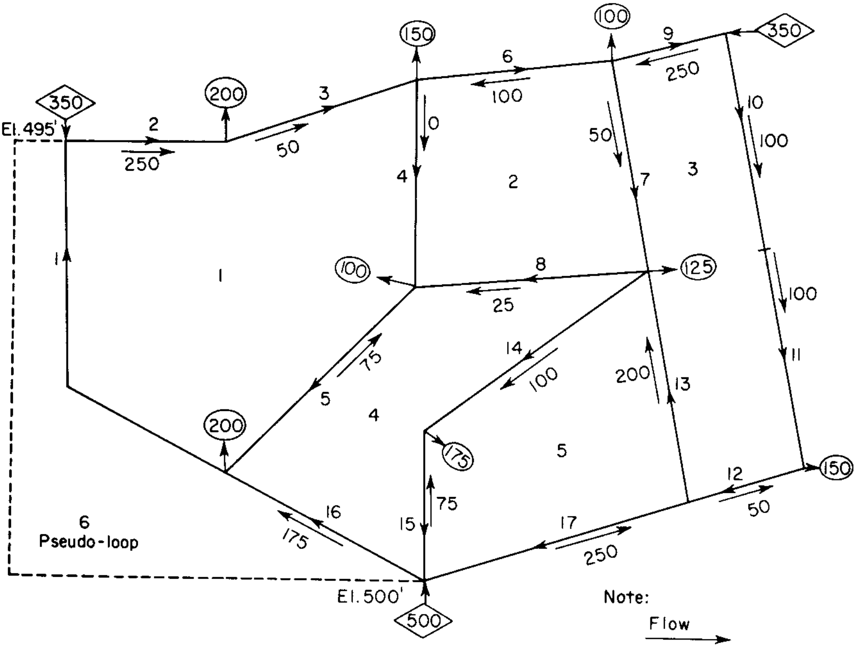
350
El. 495'
2
250
200
3
50
150
6
100
100
9
250
350
0
4
2
50
7
3
10
100
1
1
100
8
25
125
100
75
5
4
14
100
200
13
11
200
175
5
12
50
150
6
Pseudo-loop
16
175
15
75
17
250
El. 500'
500
Note:
Flow

FIGURE C1.8

cumulative; however, in a parallel piping system the head losses (h_{f1}, h_{f2}, h_{f3}) are the same in each parallel branch associated with that system, and the discharge flows (Q_1, Q_2, Q_3) are cumulative. When analyzing parallel-pipe systems, an assumption is made to add minor losses into the lengths of each pipe as equivalent lengths.

From Fig. C1.9 the conditions to be satisfied are

$$h_{f1}, h_{f2}, h_{f3} = \left(\frac{P_A}{\gamma} + Z_A\right) - \left(\frac{P_B}{\gamma} + Z_B\right) \tag{C1.1}$$

in which Z_A, Z_B are elevations of points A and B, γ, is the density of the fluid and Q is the discharge flow through the approach pipe and the exit pipe.

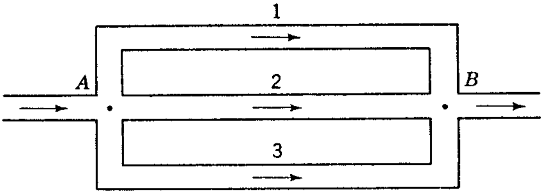

FIGURE C1.9

Illustrative Example C1.2

$L_1 = 3000$ ft $\quad D_1 = 1$ ft $\quad \varepsilon_1 = 0.001$ ft

$L_2 = 2000$ ft $\quad D_2 = 8$ in $\quad \varepsilon_2 = 0.0001$ ft

$L_3 = 4000$ ft $\quad D_3 = 16$ in $\quad \varepsilon_3 = 0.0008$ ft

$\rho = 2.00$ slugs/ft^3 $\quad \nu = 0.00003$ ft^2/s $\quad p_A = 80$ psi $\quad z_A = 100$ ft $\quad z_B = 80$ ft

For a total flow of 12 ft^3/s, determine flow through each pipe and the pressure at *B*.

Assume $Q'_1 = 3$ ft^3/s; then $V'_1 = 3.82$, $R'_1 = 3.82 \times 1/0.00003 = 127{,}000$, $\varepsilon_1/D_1 = 0.001$, $f'_1 = 0.022$, and

$$h'_{f1} = 0.022 \times \frac{3000}{1.0}\frac{(3.82)^2}{64.4} = 14.97 \text{ ft}$$

For pipe 2

$$14.97 = f'_2 \frac{2000}{0.667}\frac{V_2'^2}{2g}$$

Then $\varepsilon_2/D_2 = 0.00015$. Assume $f'_2 = 0.020$; then $V'_2 = 4.01$ ft/s, $\mathbf{R}'_2 = 4.01 \times$ ⅔ $\times 1/0.00003 = 89{,}000$ $f'_2 = 0.019$, $V'_2 = 4.11$ ft/s, $Q'_2 = 1.44$ ft^3/s.

For pipe 3

$$14.97 = f'_3 \frac{4000}{1.333}\frac{V_3'^2}{2g}$$

Then $\varepsilon_3/D_3 = 0.0006$. Assume $f'_3 = 0.020$; then $V'_3 = 4.01$ ft/s, $\mathbf{R}'_3 = 4.01 \times 1.333/0.00003 = 178{,}000$, $f'_3 = 0.020$, $Q'_3 = 5.60$ ft^3/s.

The total discharge for the assumed conditions is

$$\Sigma Q' = 3.00 + 1.44 + 5.60 = 10.04 \text{ ft}^3/\text{s}$$

Hence

$$Q_1 = \frac{3.00}{10.04} \times 12 = 3.58 \text{ ft}^3/\text{s} \quad Q_2 = \frac{1.44}{10.04} \times 12 = 1.72 \text{ ft}^3/\text{s}$$

$$Q_3 = \frac{5.60}{10.04} \times 12 = 6.70 \text{ ft}^3/\text{s}$$

Checking the values of h_1, h_2, h_3,

$$V_1 = \frac{3.58}{\pi/4} = 4.46 \quad \mathbf{R}_1 = 152{,}000 \quad f_1 = 0.021 \quad h_{f1} = 20.4 \text{ ft}$$

$$V_2 = \frac{1.72}{\pi/9} = 4.93 \quad \mathbf{R}_2 = 109{,}200 \quad f_2 = 0.019 \quad h_{f2} = 21.6 \text{ ft}$$

$$V_3 = \frac{6.70}{4\pi/9} = 4.80 \quad \mathbf{R}_3 = 213{,}000 \quad f_3 = 0.019 \quad h_{f3} = 20.4 \text{ ft}$$

f_2 is about midway between 0.018 and 0.019. If 0.018 had been selected, h_2 would be 20.4 ft.

To find p_B,

$$\frac{p_A}{\gamma} + z_A = \frac{p_B}{\gamma} + z_B + h_f$$

or

$$\frac{p_B}{\gamma} = \frac{80 \times 144}{62.4} + 100 - 80 - 20.8 = 183.5$$

in which the average head loss was taken. Then

$$p_B = \frac{183.5 \times 2 \times 32.2}{144} = 81.8 \text{ psi}$$

Two types of problems occur (1) with the elevation of the hydraulic grade line at A and B known, to find the discharge Q; (2) with Q known, to find the distribution of flow and the head loss. Sizes of pipes, fluid properties, and pipe wall roughness are assumed to be known.

The first type is the solution of a traditional pipe discharge problem, as the head loss is the drop in the hydraulic grade line. The individual discharges are then added to determine the total discharge. The second type is more complex, as neither the head loss nor the discharge for any one pipe is known. This type of problem can be solved by

1. Assuming a discharge Q'_1, through pipe 1
2. Solving for h_f, using the assumed discharge
3. Using h'_{f1}, find Q'_2, Q'_3,
4. With the three discharges flowing with a common head loss, now assume that the given Q is split up among the pipe in the same proportion as Q'_1, Q'_2, Q'_3 thus

$$Q_1 = \frac{Q'_1}{Q'} Q \qquad \text{(C1.2)}$$

$$Q_2 = \frac{Q'_2}{Q'} \qquad \text{(C1.3)}$$

$$Q_3 = \frac{Q'_3}{Q'} \qquad \text{(C1.4)}$$

5. Check the correctness of these discharges by computing h_{f1}, h_{f2}, h_{f3} for the computed Q_1, Q_2 and Q_3 flows.

Some other important relationships to consider in complex flow problems include the following:

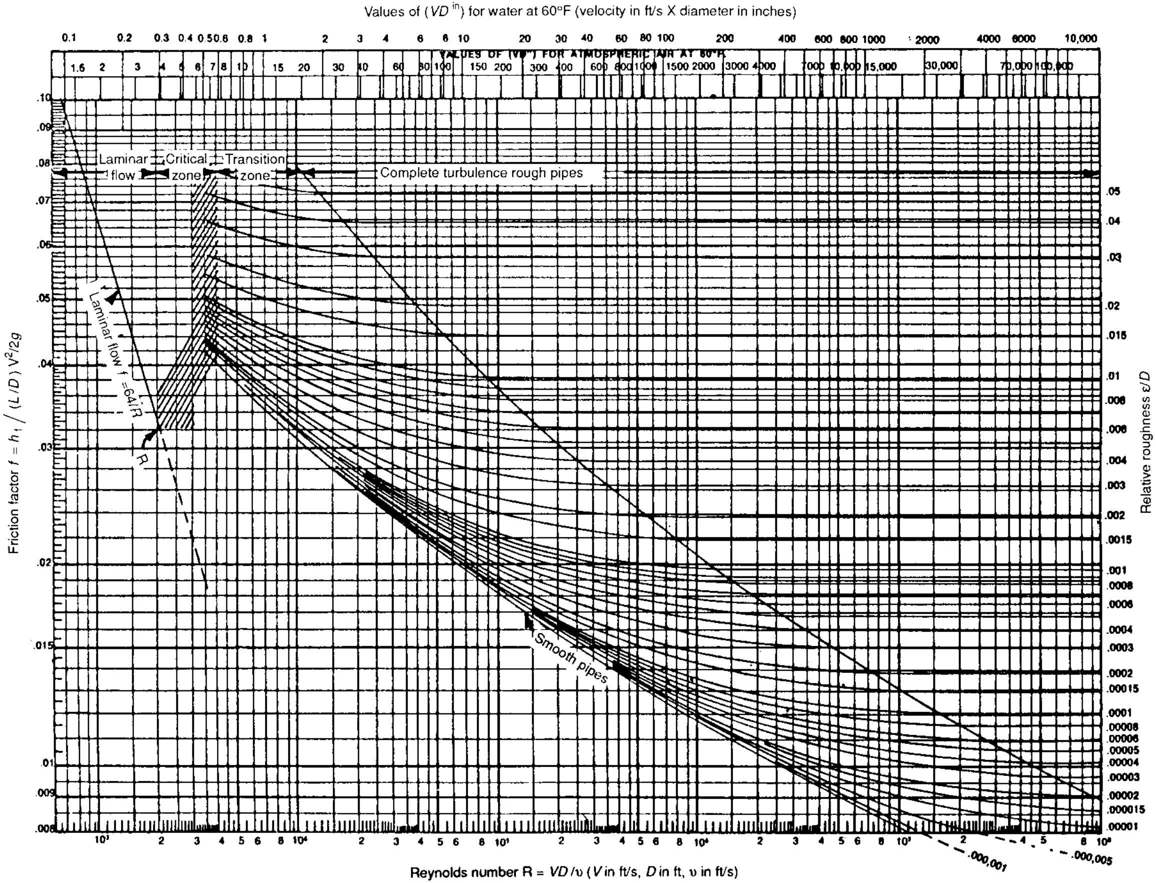

FIGURE C1.10 Moody diagram. Friction factors for any kind and size of pipe. (*Hydraulic Institute.*)

TABLE C1.1 Properties of Water at Various Temperatures from 32 to 720°F

			Specific gravity				
Temp. (°F)	Temp. (°C)	Specific volume (Cu·ft/lb)	39.2 F Reference	60 F Reference	68 F Reference	Wt in lb/cu ft	Vapor pressure psi abs
32	0	.01602	1.000	1.001	1.002	62.42	0.088
35	1.7	.01602	1.000	1.001	1.002	62.42	0.100
40	4.4	.01602	1.000	1.001	1.002	62.42	0.1217
50	10.0	.01603	.999	1.001	1.002	62.38	0.1781
60	15.6	.01604	.999	1.000	1.001	62.34	0.2563
70	21.1	.01606	.998	.999	1.000	62.27	0.3631
80	26.7	.01608	.996	.998	.999	62.19	0.5069
90	32.2	.01610	.995	.996	.997	62.11	0.6982
100	37.8	.01613	.993	.994	.995	62.00	0.9492
120	48.9	.01620	.989	.990	.991	61.73	1.692
140	60.0	.01629	.983	.985	.986	61.39	2.889
160	71.1	.01639	.977	.979	.979	61.01	4.741
180	82.2	.01651	.970	.972	.973	60.57	7.510
200	93.3	.01663	.963	.964	.966	60.13	11.526
212	100.0	.01672	.958	.959	.960	59.81	14.696
220	104.4	.01677	.955	.956	.957	59.63	17.186
240	115.6	.01692	.947	.948	.949	59.10	24.97
260	126.7	.01709	.938	.939	.940	58.51	35.43
280	137.8	.01726	.928	.929	.930	58.00	49.20
300	148.9	.01745	.918	.919	.920	57.31	67.01
320	160.0	.01765	.908	.909	.910	56.66	89.66
340	171.1	.01787	.896	.898	.899	55.96	118.01
360	182.2	.01811	.885	.886	.887	55.22	153.04
380	193.3	.01836	.873	.874	.875	54.47	195.77
400	204.4	.01864	.859	.860	.862	53.65	247.31
420	215.6	.01894	.846	.847	.848	52.80	308.83
440	226.7	.01926	.832	.833	.834	51.92	381.59
460	237.8	.0196	.817	.818	.819	51.02	466.9
480	248.9	.0200	.801	.802	.803	50.00	566.1
500	260.0	.0204	.785	.786	.787	49.02	680.8
520	271.1	.0209	.765	.766	.767	47.85	812.4
540	282.2	.0215	.746	.747	.748	46.51	962.5
560	293.3	.0221	.720	.727	.728	45.8	1133.1
580	304.4	.0228	.703	.704	.704	43.9	1325.8
600	315.6	.0236	.678	.679	.680	42.3	1542.9
620	326.7	.0247	.649	.650	.650	40.5	1786.6
640	337.8	.0260	.617	.618	.618	38.5	2059.7
660	348.9	.0278	.577	.577	.578	36.0	2365.4
680	360.0	.0305	.525	.526	.527	32.8	2708.1
700	371.1	.0369	.434	.435	.435	27.1	3093.7
720	374.1	.0503	.319	.319	.320	19.9	3206.2

Computed from Keenan & Keyes' Steam Table.

In the turbulent region, Reynolds number above 2000 (see Moody diagram, Fig. C1.10, to determine region and establish relationship for head loss), the pressure drop h varies as the 1.85 power of the flow rate Q, that is:

$$\frac{h_1}{h_2} = \left(\frac{Q_1}{Q_2}\right)^{1.85} \tag{C1.5}$$

In the viscous flow region (low flow, Reynolds number below 2000), the pressure drop varies directly as the flow or

$$\frac{h_1}{h_2} = \frac{Q_1}{Q_2} \tag{C1.6}$$

For the same flow, pressure drop varies approximately as the fifth power of the inside diameter D, so that,

$$\frac{h_1}{h_2} = \left(\frac{D^2}{D_1}\right)^5 \tag{C1.7}$$

These relationships have been widely used and have resulted in handy pressure drop tables. Appendix E.4 provides friction-loss data for water and commonly used steel pipe and lined ductile iron pipe (DIP) in some representative sizes. Table C1.1 provides properties of water at various temperatures. Figure C1.10 provides friction factors for any kind and size of pipe, based on pipe relative roughness and Reynolds number.

HYDRAULIC AND ENERGY GRADE LINES

The concepts of hydraulic and energy grade lines are useful in analyzing more complex water flow problems (see Fig. C1.11). If, at each point along a pipe system, the term P/γ is determined and plotted as a vertical distance above the center of

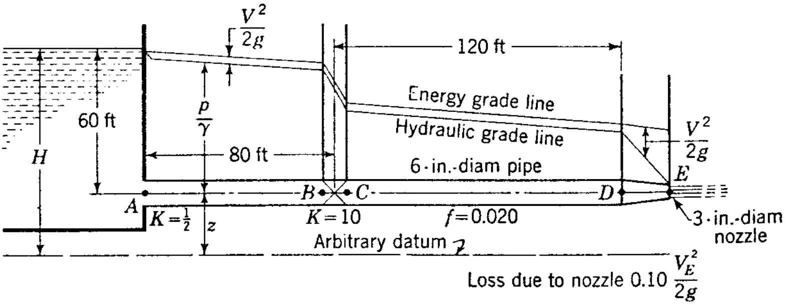
$\frac{V^2}{2g}$
120 ft
Energy grade line
Hydraulic grade line
6-in.-diam pipe
$\frac{p}{\gamma}$
60 ft
H
80 ft
$\frac{V^2}{2g}$
E
A
B
C
D
$K=\frac{1}{2}$
z
$K=10$
$f=0.020$
Arbitrary datum
3-in.-diam nozzle
Loss due to nozzle $0.10\,\frac{V_E^2}{2g}$

FIGURE C1.11 Hydraulic and energy grade lines.

the pipe, the connection of these points is the hydraulic grade line. More generally the plot of the two terms

$$\frac{p}{\gamma} + Z$$

for the flow as the ordinate against length along the pipe as abscissa produces the hydraulic grade line.

The hydraulic grade line is the locus of heights to which liquid would rise in vertical glass tubes connected to piezometer openings in the line. When the pressure in the line is less than atmospheric, p/γ is negative and the hydraulic grade line is below the pipeline.

The energy grade line is a line joining a series of points marking the available energy in ft · lb/lb for each point along the pipe as the ordinate, plotted against distance along the pipe as the abscissa. It consists of the plot of

$$\frac{V^2}{2g} + \frac{p}{\gamma} + Z$$

for each point along the line, where g = acceleration due to gravity, 32.2 ft/sec^2 [9.8 m/sec^2]. The energy grade line is always vertically above the hydraulic grade line by a distance of $V^2/2g$, neglecting the kinetic-energy correction factor.

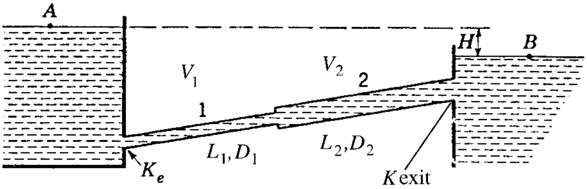

FIGURE C1.12 Pipes connected in series.

Pipes in Series

When two pipes of different sizes or roughness are connected so that fluid flows through one pipe and then through the other pipe, they are said to be connected in series. By applying the energy equation, including all losses, for the system in Fig. C1.12, for known lengths and sizes of pipes, the relationship between head loss and flow can be expressed as

$$H = K_e \frac{V_1^2}{2g} + \frac{f_1 L_1}{D_1} \cdot \frac{V_1^2}{2g} + \frac{f_2 L_2}{D_2} \frac{V_2^2}{2g} + K_{\text{exit}} \cdot \frac{V_2^2}{2g} \tag{C1.8}$$

where

K_e = entry loss coefficient

K_{exit} = exit loss coefficient

L_1, L_2 = pipe length of sections 1 and 2 respectively

D_1, D_2 = pipe diameter of sections 1 and 2 respectively

V_1, V_2 = velocity of flow in sections 1 and 2 respectively

Series pipes may be solved by the method of equivalent lengths. Two-pipe systems are said to be equivalent when the same head loss produces the same discharge in both systems. This is expressed as

$$\frac{f_1 L_1}{D_1^5} = \frac{f_2 L_2}{D_2^5} \tag{C1.9}$$

Solving for L_2

$$L_2 = L_1 \frac{f_1}{f_2} \left(\frac{D_2}{D_1} \right)^5 \tag{C1.10}$$

which determines the length of a second pipe to be equivalent for use with velocity of the first pipe.

REFERENCE DOCUMENTS

Codes and Standards

Table C1.2 provides a listing of the most commonly used industry codes and standards in water-systems design, fabrication, assembly, and testing.

American Society of Mechanical Engineers (ASME) Boiler and Pressure Vessel Code. The ASME code covers design and construction of boilers (Section I) or nuclear power plant components (Section III). Insurance companies and most state and municipal authorities recognize this code and make it a prerequisite for acceptance and installation of such power equipment within their jurisdiction.

The Code involves eleven sections, of which the following are concerned with piping:

Section I Power Boilers
Section II Materials
Section III Nuclear Power Plant Components
Section XI Rules for Inservice Inspection of Nuclear Power Plant Components

ASME Code for Pressure Piping, B31

B31.1 Power Piping
B31.3 Process Piping
B31.9 Building Services Piping

Other Standards

American Petroleum Institute
American Welding Society
American Water Works Association

TABLE C1.2

AWWA designation	ANSI designation	Title
		AWWA standards for ductile-iron pipe and fittings
C-104–95	A21.4	Standard for Cement-Mortar Lining for Ductile-Iron Pipe and Fittings for Water
C-105–93	A21.5	Standard for Polyethylene Encasement for Ductile-Iron Piping for Water and Other Liquids
C-110–93	A21.10	Standard for Ductile-Iron and Gray-Iron Fittings, 3 in. (75 mm) through 48 in. (1200 mm) for Water and Other Liquids
C111–95	A21.11	Standard for Rubber Gasket Joints for Ductile-Iron and Gray-Iron Pressure Pipe and Fittings
C115–94	A21.15	Standard for Flanged Ductile-Iron Pipe with Threaded Flanges
C150–96	A21.50	Standard for Thickness Design of Ductile-Iron Pipe
C151–96	A21.51	Standard for Ductile-Iron Pipe, Centrifugally Cast in Metal Molds or Sand-Lined Molds, for Water or Other Liquids
C153–94	A21.53	Standards for Ductile-Iron Compact Fittings 3 in. through 24 in. (75 mm through 610 mm), and 54 in. through 64 in. (1400 mm through 1600 mm) for water service
		AWWA standards for steel pipe
C200–97	—	Standard for Steel Water Pipe 6 in. (150 mm) and Larger
C203–97	—	Standard for Coal-Tar Protective Coatings and Lining for Steel Water Pipelines Enamel and Tape—Hot Applied
C205–95	—	Standard for Cement-Mortar Protective Lining and Coating for Steel Water Pipe 4 in. and Larger—Shop Applied
C206–97	—	Standard for Field Welding of Steel Water Pipe
C207–94	—	Standard for Steel Pipe Flanges for Waterworks Service Sizes 4 in. through 144 in. (100 mm through 3600 mm)
C208–96	—	Standard for Dimensions for Fabricated Steel Water Pipe Fittings
C209–95	—	Standard for Cold-Applied Tape Coatings for the Exterior of Special Sections, Connections, and Fittings for Steel Water Pipelines
C210–97	—	Standard for Liquid Epoxy Coating Systems for the Interior and Exterior of Steel Water Pipelines
C213–96	—	Standard for Fusion Bonded Epoxy Coating for the Interior and Exterior of Steel Water Pipelines
C214–95	—	Standard for Tape Coating Systems for the Exterior of Steel Water Pipelines
C215–94	—	Standard for Extruded Polyolefin Coatings for the Exterior of Steel Water Pipelines
C216–94	—	Heat-Shrinkable Cross-Linked Polyolefin Coatings for the Exterior of Special Sections, Connections and Fittings for Steel Water Pipelines
C217–95	—	AWWA Standard for Cold-Applied Petrolatum Tape and Petroleum Wax Tape Coatings for the Exterior of Special Sections, Connections, and Fittings for Buried Steel Water Pipelines

TABLE C1.2 (*Continued*)

AWWA designation	ANSI designation	Title
C218–95	—	AWWA Standard for Coating the Exterior of Aboveground Steel Water Pipelines and Fittings
C219–97	—	AWWA Standard for Bolted, Sleeve-Type Couplings for Plain-End Pipe
C220–92	—	AWWA Standard for Stainless Steel Pipe, 4 in. (100 mm) and Larger
C221–97	—	AWWA Standard for Fabricated Steel Mechanical Slip-Type Expansion Joints
		AWWA standard for concrete pipe
C300–97	—	Standard for Reinforced Concrete Pressure Pipe, Steel Cylinder Type, for Water and Other Liquids
C301–92	—	Standard for Prestressed Concrete Pressure Pipe, Steel Cylinder Type, for Water and Other Liquids
C302–95	—	Standard for Reinforced Concrete Pressure Pipe, Non-cylinder Type
C303–95	—	Standard for Concrete Pressure Pipe, Bar-Wrapped Steel-Cylinder Type
C304–92	—	Standard for Design of Prestressed Concrete Cylinder Pipe Asbestos-Cement Pipe
		AWWA standards for asbestos-cement pipe
C400–93	—	Standard for Asbestos-Cement Distribution Pipe 4 in. through 16 in. (100 mm through 400 mm), for Water Distribution Systems
C401–93	—	Standard for the Selection of Asbestos-Cement Pressure Pipe, 4 in. through 16 in. (100 mm through 400 mm), for Water Distribution Systems
C402–95	—	Standard for Asbestos-Cement Transmission Pipe, 18 in. through 42 in. (450 mm through 1050 mm) for Potable Water and Other Liquids
C403–95	—	Standard for the Selection of Asbestos-Cement Transmission and Feeder Main Pipe, Sizes 18 in. through 42 in. (450 mm through 1050 mm)
		AWWA standards for valves and hydrants
C500–93	—	Standard for Metal-Sealed Gate Valves for Water-Supply Service
C501–92	—	Standard for Cast-Iron Sluice Gates
C502–94	—	Standard for Dry-Barrel Fire Hydrants
C503–88	—	Standard for Wet-Barrel Fire Hydrants
C504–94	—	Standard for Rubber-Seated Butterfly Valves
C507–91	—	Standard for Ball Valves 6 in. through 48 in. (150 mm through 1200 mm)
C508–93	—	Standard for Swing-Check Valves for Waterworks Service, 2 in. (50 mm) through 24 in. (600 mm) NPS
C509–94	—	Resilient-Seated Gate Valves for Water Supply Service
C510–97	—	AWWA Standard for Double Check Valve Backflow-Prevention Assembly
C511–97	—	AWWA Standard for Reduced-Pressure Principle Backflow-Prevention Assembly

TABLE C1.2 (*Continued*)

AWWA designation	ANSI designation	Title
C512–92	—	AWWA Standard for Air-Release, Air/Vacuum, and Combination Air Valves for Waterworks Service
C513–97	—	AWWA Standard for Open-Channel, Fabricated Metal Slide Gates
C540–93	—	Standard for Power-Actuating Devices for Valves and Sluice Gates
C550–90	—	Standard for Protective Epoxy Interior Coatings for Valves and Hydrants
		AWWA standards for pipe installation
C600–93	—	Standard for Installation of Ductile-Iron Water Mains and Their Appurtenances
C602–95	—	Standard for Cement-Mortar Lining of Water Pipelines—4 in. (100 mm) and Larger in Place
C603–96	—	Standard for Installation of Asbestos-Cement Pressure Pipe
C605–94	—	AWWA Standard for Underground Installation of Polyvinyl Chloride (PVC) Pressure Pipe Fittings for Water
C606–97	—	Standard for Grooved and Shouldered Joints
C651–92	—	Standard for Disinfecting Water Mains
C652–92	—	Standard for Disinfection of Water Storage Facilities
C653–97	—	Standard for Disinfection for Water Treatment Plants
C654–97	—	Standard for Disinfection of Wells
		AWWA standards for meters
C700–95	—	Cold Water Meters—Displacement Type, Bronze Main Case
C701–88	—	Cold Water Meters—Turbine Type, for Customer Service
C702–92	—	Cold Water Meters—Compound Type
C703–96	—	Cold Water Meters—Fire-Service Type
C704–92	—	Cold Water Meters—Propeller Type for Waterworks Applications (R 1984)
C706–96	—	Standard for Direct Reading Remote-Registration Systems for Cold Water Meters
C707–82(R 92)	—	Standard for Encoder-Type Remote-Registration Systems for Cold Water Meters
C708–96	—	Standard for Cold Water Meters—Multi-Jet Types
C710–95	—	AWWA Standard for Cold-Water Meters—Displacement Type, Plastic Main Case (Includes addendum C710a–91.)
		AWWA standard for service lines
C800–89	—	Standard for Underground Service Line Valves and Fittings
		AWWA standard for plastic pipe
C900–97	—	Standard for Polyvinyl Chloride (PVC) Pressure Pipe, 4 in. through 12 in. (100 mm 300 mm) for Water Distribution
C901–96	—	Standard for Polyethylene (PE) Pressure Pipe and Tubing, ½ in. (13 mm) through 3 in. (76 mm) for Water Service
C905–97	—	Standard for Polyvinyl Chloride (PVC) Pressure Pipe and Fabricated Fittings, 14 in. through 48 in. (350 mm through 1,200 mm), for Water Transmission and Distribution

TABLE C1.2 (*Continued*)

AWWA designation	ANSI designation	Title
C906–90	—	Standard for Polyethylene (PE) Pressure Pipe and Fittings, 4 in. through 63 in., for Water Distribution
C907–91	—	Standard for Polyvinyl Chloride (PVC) Pressure Fittings for Water—4 in. through 8 in. (100 mm through 200 mm)
C908–97	—	Standard for PVC Self-Tapping Saddle Tees for Use on PVC Pipe
C950–95	—	Standard for Fiberglass Pressure Pipe
		AWWA standards for storage
D100–96	—	Standard for Welded Steel Tanks for Water Storage
D101–53(R86)	—	Standard for Inspecting and Repairing Steel Water Tanks, Standpipes, Reservoirs and Elevated Tanks for Water Storage (R 1986)
D102–97	—	Standard for Painting Steel Water-Storage Tanks
D103–97	—	Standard for Factory-Coated Bolted Steel Tanks for Water Storage
D104–97	—	Standard for Automatically Controlled, Impressed-Current Cathodic Protection for the Interior of Steel Water Tanks
D110–95	—	Standard for Wire- and Strand-Wound Circular Prestressed-Concrete Water Tanks
D115–95	—	AWWA Standard for Circular Prestressed Concrete Water Tanks with Circumferential Tendons
D120–84(R89)	—	Standard for Thermosetting Fiberglass-Reinforced Plastic Tanks
D130–96	—	Standard for Flexible Membrane-lining and Floating Cover Materials for Potable-Water Storage
		AWWA standard for vertical turbine pumps
E101–88	—	Standard for Vertical Turbine Pumps—Line Shaft and Submersible Types

Pipe Fabrication Institute

National Fire Protection Association (NFPA)

DESIGN BASIS CONSIDERATIONS

Design Criteria

Design Pressure. In the design of water piping systems the following guidance is provided in determining and specifying system-design pressure requirements.

The design pressure shall be based on the maximum expected operating pressure of a particular system which is determined from the maximum operating pressure of the connected pump, pressure vessels, relief valve settings, et cetera, depending on the type of system and equipment used. Reasonable margin shall be added to cover variations in expected maximum performance, transients, and control tolerances.

The internal design pressure, including the effect of the static head and allowance for pressure surges, shall not be less than the maximum sustained fluid operating pressure. Consideration shall also be given to pump shut-off pressure.

Piping subject to external pressure shall be designed for the maximum differential pressure anticipated during operating, shutdown, or test conditions, excluding pressure tests. Refer to Chap. B2. For buried piping this includes loading due to earth cover and traffic.

In accordance with ASME B31.1, Paragraph 102.2.4, the piping system shall be considered safe for occasional short operating periods at higher than design pressure or temperature, if the calculated stress value is not exceeded by more than 15 percent during less than 10 percent of any 24-hour operating period or by more than 20 percent during less than 1 percent of any 24-hour operating period.

A piping system is considered safe for operation if the maximum sustained pressure and temperature which may act at any part or component of the system does not exceed the maximum pressure and temperature determined in accordance with Code rules by the Power Piping Code ASME B31.1. Allowable stress values and pressure-temperature ratings are provided by the piping codes and the standards referenced therein.

Design Temperature. In the design of water distribution systems, the following guidance is provided in determining and specifying system-design temperature requirements.

The design temperature shall be determined on the basis of the maximum expected operating temperature. The effects of pumping, throttling, heating, cooling, et cetera, must be considered in the determination of the design temperature of the piping system.

Pipe Sizing Criteria. Typically, total piping system cost is approximately 7 to 8 percent of the total plant investment. These values range upward to 30 percent for municipal water systems and some ships. Selection of pipe sizes, beside affecting initial cost, will also affect operating costs due to their sensitivity to changes in pressure drop, heat losses, and maintenance requirements.

Selection of a pipe-line size involves determination of an optimum size. For instance, if extra pumping is needed to boost the fluid pressure or if the heat rate will be affected adversely, then the cost of the extra energy required becomes a significant factor in the evaluations. The optimum pipe size is obtained when the sum of installed and operating costs is at the minimum.

Piping optimization is not widely used in preliminary calculations. Where the pressure drop is defined by other considerations, the minimum pipe size compatible with good engineering practice will be selected.

Other related considerations which have an important impact on pipe size selection, include:

1. Noise—which can result from high velocity flow, cavitation or two-phase flow.
2. Vibration—which can result from noise, excessive velocities at changes in the direction of the fluid flow, or the causes of cavitation.
3. Erosion or corrosion—due to chemical action of the fluid, excessive velocities, cavitation, and excessive turbulence at fittings, valves, branch connections, etc.

4. Flow distribution—the more uniform the cross-sectional velocity profile, the more likely that the above factors will be reduced. This can be achieved by using reasonable velocities along with a piping layout that will produce a smooth flow pattern.
5. Cavitation—which can result from the collapse of bubbles close to a metallic surface at a high enough velocity to cause erosion, and two-phase flow fluids.

Effects of Velocity. Higher allowable velocities will lead to smaller pipe sizes and higher pressure drops. Excessively high velocities can cause noise, vibration, and erosion. Velocities in pump-suction lines shall be kept sufficiently low in order to maintain the pump's required net positive suction head (NPSH).

The pressure drop in a system can be decreased by selecting a larger pipe size or sometimes by using more than one pipe for the total flow.

For water piping systems a velocity in the range of 4 to 15 ft/sec (1.2 to 4.6 m/sec) is acceptable. Depending upon the material selected, piping design and size is either in the low or high side of this range, considering the economics of system installation and operation. For example, for brass pipe a velocity between 4 to 15 ft/sec (1.2 to 4.6 m/sec) would be recommended, while for steel pipe, a velocity of 7 to 10 ft/sec (2.1 to 3 m/sec) is the recommended range, while velocities to 30 ft/sec (9.1 m/sec) may be acceptable. Higher velocities are acceptable if materials less susceptible to erosion (e.g., stainless steel) are selected. Concurrently reducing vibration and meeting system hydraulic requirements will reduce the piping's susceptibility to erosion. In all cases, it should be recognized that these ranges are recommended only if system operating requirements are also satisfied. High velocities are often conducive to water hammer problems.

Pipe-Wall Thickness Selection. After determining the internal diameter of the pipe, the designer must select materials, consider their strength, and select a pipe-wall thickness or schedule, as a function of temperature, pressure, corrosion, erosion, vibration, and external loads, as required.

Pipe-wall thickness determination begins with the basic hoop stress in the pipe wall. This stress calculation ignores longitudinal wall stress that exists if the pipe has closed ends. An example of this is a flask or short header.

Advanced analysis shows that for thin-wall pipe, the outside diameter should be used in the hoop stress equation:

$$S = \frac{PD_o}{2t_{\min}} \tag{C1.11}$$

where P = internal design pressure, psig (kPa) [gauge]
D_o = outside diameter of pipe, in (mm)
$t_{\min}$ = minimum required pipe wall thickness, in (mm)
S = allowable stress, psi (kPa)

This equation, called the Barlow formula, is the basis for most code stress-pipewall-thickness calculations such as those provided in ASME B31.1 and B31.3. The formula also applies to thick-walled pipe.

The Barlow formula allows determination of wall thickness for flexible pipe required to handle internal pressure. Pipe-wall thickness must also be adequate to handle external loads such as soil cover and vehicle loads, vacuum, and buckling. For flexible pipe such as steel, ductile iron, PVC, and HDPE, determination of thickness for internal pressure and determination of thickness to handle external loads are calculated separately, and the greater of the two thicknesses is used. For flexible pipe, thickness required to handle deflection from external soil and vehicle loads is calculated using the Modified Iowa formula:

$$\Delta X = (D_L \times K \times W \times r^3)/\{(E \times I) + (.061 \times E' \times r^3)\} \tag{C1.12}$$

where D_L = deflection lag factor
K = bedding constant
W = load per unit length of pipe
r = pipe radius
E = modulus of elasticity of pipe material
I = moment of inertia of pipe
E' = modulus of soil reaction
ΔX = deflection

The minimum thickness is determined based on maximum allowable deflection. Maximum allowable deflection varies for different materials, e.g., steel, ductile iron, PVC, HDPE, et cetera. For steel and ductile iron, the limiting factor in maximum allowable deflection is the nature of lining and coating of the pipe, with concrete lining or coating limiting deflection to less than that for a more flexible lining or coating such as epoxy. For PVC and HDPE, the allowable stress and strain in the pipe wall determines the maximum allowable deflection. In the municipal water works industry, guidance for calculating pipe wall thickness for steel pipe is provided in AWWA Manual M11, in AWWA C900 and C905 and Manual M23 for PVC, in AWWA C906 and manufacturers' literature for HDPE, and in AWWA C150 for ductile iron.

For certain types of rigid-pressure pipe, for example, prestressed concrete–cylinder pipe and cast-iron pipe (no longer used), design is based on combined loading, wherein internal pressure and external load are considered simultaneously—as internal pressure increases, allowable external loading decreases, and vice-versa. Design guidelines for prestressed concrete–cylinder pipe are found in AWWA Manual M9.

In the design of pipe, various configurations of bedding, backfill, and trench preparation can contribute to the pipe's adequacy to handle external load. These factors are addressed in the aforementioned manuals and specifications.

The allowable stress in a pipe wall is not determined solely by the material's strength at the service temperature. In pipe with a longitudinal welded seam, the efficiency of the welded joint must also be considered.

ASME Power Piping Code, Section B31.1, provides efficiency factors of 0.60 for a furnace butt weld, 0.85 for an electric-resistance weld, and 1.00 for single or double butt weld with 100 percent radiography. Allowable stress for welded pipe is determined by multiplying the allowable stress value for seamless pipe at the given temperature by the efficiency factor. Tables of allowable stress in Codes, such as B31.1, include the joint efficiency. The B31.1 Code further specifies the following formula for determining the minimum thickness of pipe wall at design temperatures,

$$t_m = \frac{PD_o}{2(SE + Py)} + A \tag{C1.13}$$

or,

$$t_m = \frac{Pd + 2SEA + 2yPA}{2(SE + Py - P)} \tag{C1.14}$$

and the design pressure shall not exceed

$$P = \frac{2SE(t_m - A)}{D_o - 2_y(t_m - A)} \tag{C1.15}$$

$$P = \frac{2SE(t_m - A)}{d - 2_y(t_m - A) + 2t_m} \tag{C1.16}$$

where t_m = minimum pipe wall thickness, in (mm)
P = internal design pressure, psig (kPa [gage])
D_o = outside diameter of pipe, in (mm). For design calculations, the outside diameter of pipe, as given in tables of standards and specifications, is used in obtaining the value of t_m. When calculating the allowable working pressure of pipe on hand or in stock, the actual measured outside diameter and actual measured minimum wall thickness at the thinner end of the pipe may be used to calculate this pressure.
d = inside diameter of pipe, in (mm). For design calculations, the inside diameter of pipe is the maximum possible value allowable under the purchase specification. When calculating the allowable working pressure of pipe on hand or in stock, the actual measured inside diameter and actual measured minimum wall thickness at the thinner end of the pipe may be used to calculate this pressure.
SE = allowable stress for the material due to internal pressure and joint efficiency, at the design temperature, psi (kPa)
A = allowance for threading, grooving, mechanical strength, and the effects of erosion and corrosion, in (mm)
y = 0.4 for ferritic steels and austenitic steels for temperatures up to 900°F (480°C). For pipe with a D_o/t_m ratio less than 6, the value of y for ferritic and austenitic steels designed for temperature of 900 F (480°C) and below shall be taken as:

$$y = \frac{d}{d + D_o} \tag{C1.17}$$

If pipe is ordered by its nominal wall thickness, the manufacturing tolerance on wall thickness must be taken into account. After the minimum pipe wall thickness t_m is determined by equation C1.13 or C1.14, this minimum thickness shall be increased by an amount sufficient to provide the manufacturing tolerance allowed in the applicable pipe specification or required by the process. The next heavier commercial wall thickness shall then be selected from thickness schedules such as contained in ASME B36.10M, ASME B36.19, or from manufacturers' schedules for other than standard thickness. Refer to Chap. B2 for details on calculating the pipe-wall thickness. For cast piping components, or to compensate for thinning in bends, refer to the applicable Code.

Where ends are subject to forming or machining for jointing, the wall thickness of the pipe, tube, or component shall not be less than t_m, after such forming and machining.

The thickness of gray and ductile-iron pipe conveying liquids may be determined by selection from AWWA/ANSI C110/A21.10, AWWA/ANSI C115/A21.15, AWWA/ANSI C150/A21.50, AWWA/ANSI C151/A21.51, and Federal Specification WW-P-421.

While the thickness of steel pipe determined from Eq. C1.13 or C1.14 is theoretically ample for both bursting pressure and material removed in threading, the following minimum requirements are mandatory to provide added mechanical strength:

1. Where steel pipe is threaded and used for water service above 100 psi (700 kPa) with water temperature above 220°F (105°C), the pipe shall be seamless, having the minimum ultimate tensile strength of 48,000 psi (330 MPa) and a weight at least equal to Schedule 80 of ASME B36.10M.
2. Where threaded brass or copper pipe is used for the services described previously, it shall comply with pressure and temperature classifications permitted for these materials by other paragraphs of the applicable Code and shall have a wall thickness at least equal to that specified for steel pipe of corresponding size.
3. Plain-end nonferrous pipe or tube shall have minimum thickness as follows:
   - ***a.*** For nominal sizes smaller than NPS ¾ (DN20), the thickness shall not be less than that specified for Type K of ASTM B 88 for copper tubing.
   - ***b.*** For nominal sizes NPS ¾ (DN20) and larger, the wall thickness shall not be less than 0.049 in (1.25 mm). The wall thickness shall be further increased as required by determining the minimum wall.
4. After calculating the required minimum wall thickness, choice is usually made from standard thickness or schedules. Tables of pipe sizes and wall thickness (schedules) are presented in App. E2 and E2M. For tubing, refer to App. E3 and E3M.
5. For piping systems other than steel or cast iron, the reader is referred to the applicable code.

Design Features

Materials. This section discusses the most commonly used materials for water-distribution-system piping and piping components. Pipe description, material-specifications characteristics, available sizes, normal use, and advantages or disadvantages of different materials are briefly noted in Table C1.3. It should also be noted that state and local regulations may govern the preferred types of pipe to be used for water distribution systems.

The selection of water-distribution-system piping is based upon the following considerations: strength, ductility, modulus of elasticity, toughness, corrosion, erosion and abrasion resistance, weldability, workability, and surface smoothness. The most common piping materials are steel, either low-carbon, low-alloy, or stainless; plastic, either thermoplastic or thermosetting with fiberglass reinforcement; or concrete, lined and unlined. Aluminum, copper, brass, titanium, and high-nickel alloys are also used for some specific applications.

The metallurgy of the various types of metallic pipe material is somewhat complicated; however, an understanding of the basic physical properties and their effects is necessary for design engineers concerned with selecting pipe material, pipe fabrication process, welding process, and corrosion resistance properties. The most commonly accepted piping standards are those of the American Society for Testing and Materials (ASTM), American Water Works Association (AWWA), American National Standards Institute (ANSI), the American Society of Mechanical Engineers (ASME), and the American Petroleum Institute (API).

These standards have been developed by experimentation, testing, and experience. Most regulatory agencies use these guidelines to set their own requirements. Pipe manufacturers also publish product literature that is useful in pipe selection and installation. Table C1.4 summarizes the advantages and disadvantages of piping materials and related data of pipe joints and their applications.

TABLE C1.3 Piping Material Specifications, Standards, and Applications Material

Material	Industry standards	Common sizes diam in (mm)	Normal maximum working pressure psi (kPa)	Advantages	Disadvantages
Cast-iron pipe		4–30 (100–760)	350 (2414)	Durable, strong, flexural-strength, lighter weight than cast iron, greater carrying capacity, same external diameter, fracture resistant, easily tapped.	Subject to electrolysis and attack from acid and alkali soil, heavy to handle; may require thrust blocks at changes in direction or restraint of joints to counteract unbalanced forces.
Ductile iron	ANSI/AWWA/C151/A21.51				
Centrifugally cast in metal	ASTM A377				
Molds or sand-lined molds for water and other liquids					
Concrete		12–168 (300–4300)	50 (345)	Durable with low maintenance, good corrosion resistance, good flow characteristics, generally suited for gravity systems with low gradient.	May deteriorate in alkaline soil if cement type is improper or in acid soil if not protected; may require thrust blocks at changes in direction or restraint of joints to counteract unbalanced forces.
Reinforced concrete pressure	AWWA C302				
Pipe noncylinder type for water and other liquids					
Prestressed concrete		16–144 (410 mm–3660 mm)	250 (1724)	Durable, low maintenance, good corrosion resistance, good flow characteristics, resists backfill and external loads.	Same as above.
Pressure-pipe steel cylinder	ANSI/AWWA C301 and C304				
Type for water and other liquids					
Steel		4–120 (100–3000)	High	Easy to install, tensile strength, low cost, good hydraulically when lined, adapted to locations where some movement may occur.	Subject to electrolysis external corrosion in acid or alkali soil, poor corrosion-resistance welded unless properly lined, coated, and wrapped; low resistance to external pressure in large sizes; air-vacuum valves imperative in large sizes; subject to tuberculation when unlined.
Seamless pipe for high temperature service	ASTM A106, A335, A376				
Seamless and seam-welded pipe	ASTM A53, A312, A333, A714				
Forged and bored pipe for high-temperature service	ASTM A426, A451, A452				
Polyvinyl chloride (PVC)		4–36 (100–900)	200 (1380)	Light weight, easy to install, excellent resistance to corrosion, good flow characteristics, high tensile and impact strength	Difficult to locate underground; requires special care when tapping; susceptible to damage during handling; aboveground use may require more supports. PVC pipe also requires thrust restraint at change in direction or velocity.
PVC plastic pipe	ASTM D1785				
Schedule 40, 80 pressure rated (SDR) series	ASTM D2241				
PVC pressure pipe	ANSI/AWWA C900 and C905				

TABLE C1.3 Piping Material Specifications, Standards, and Applications Material (*Continued*)

Material	Industry standards	Common sizes diam in (mm)	Normal maximum working pressure psi (kPa)	Advantages	Disadvantages
Copper		⅛–12 (3–300)	<700 (4828)	Excellent resistance to corrosion; ideal for use in water supply and plumbing, including DWV, compressed-air-instrumentation lines, and heat transfer equipment.	Copper deteriorates rapidly under high temperature and repeated stresses.
Seamless copper Standard sizes	ASTM B42				
Seamless copper Water tube for general plumbing Purposes	ASTM B88				
Seamless, threadless copper pipe	ASTM B302				
Seamless copper tube	ASTM B75				
Copper nickel, seamless copper, nickel pipe and tube	ASTM B466			High level of corrosion resistance of copper nickel; 10% to corrosion and bifouling make ideal for use in piping systems for brackish or sea water. Copper nickel, 30% provides the best service under the most adverse condition. It offers excellent corrosion resistance to high-velocity seawater, immune to stress-corrosion cracking and resistant to the action of ammonia.	May undergo a general attack or uniform thinning in aggressive environment containing high concentration of oxygen and carbon-dioxide.
Welded copper nickel pipe					
Welded copper and copper alloy Heat-exchange tube, 90-10 and 70-30	ASTM B467				
Aluminum		⅛–12 (3–300)	<300 (2069)	Light weight, durable, strong, ideal for use in cyrogenic systems, heat-transpressure lines, process systems where performance requirements outweigh cost.	Requires special techniques and skills for brazing or welding joints depending on type of alloy.
Aluminum and aluminum alloy Seamless-pipe extruded tube	ASTM B241				
Drawn seamless tube for condensers and heat exchangers	ASTM B234				
Aluminum-alloy drawn seamless tube	ASTM B210				
Titanium		⅛–12 (3–300)	High	Excellent for general corrosion resisting and elevated temperature service. Lighter than steel while having strength comparable with alloy steel. Excellent for use with cooling water, fresh brackish or salt, polluted, etc., essentially immune to all forms of corrosion in condenser environments.	Resistance to bifouling is relatively poor when compared to copper alloy for similar application; coupling of titanium tubes with copper-alloy tube sheets in condensers may result in galvanic attack on the tube sheet in all types and make it essential to provide some form of cathodic protection.
Seamless and welded titanium Alloy pipe	ASTM B337				
Seamless and welded titanium Alloy tube for condensers and heat exchangers	ASTM B338				

Note: Materials used for piping within the jurisdiction of ASME I and ASME III, and boiler external piping are designated by SA/SB numbers and are derived from ASTM "A" specifications for ASME Boiler and Pressure Vessel Code applications, see related specifications SA/SB in Section II of the ASME Boiler and Pressure Vessel Code.

TABLE C1.4 Pipe Joints and Their Applications

Pipe material	Type of joints	Applications
Steel	Mechanical-type couplings	Pipes are less than 24 in od, especially linings.
Steel	Welded joints	Pipes 24 in od and larger with inside coatings ideal for soft soils where settlement may be excessive.
Steel	Flanged joints	Where flanged valves, fittings or nozzles of equipment are to be attached. Offer ease of assembly and disassembly.
Copper	Welded, flanged, threaded, screwed, or brazed, flared fittings	Generally used in underground water service, interior water, steam, gas, fuel, oil and for some underground drainage.
Copper-nickel	Flanged, soldered, or brazed fittings used with hard drain temperatures; flared compression fittings used with annealed temper tubes	Used in condenser tubing, systems for sea or brackish water.
Aluminum	Brazed, welded	Used in cryogenic systems, heat transfer, process systems and pressure lines.
Titanium	Welded	Used with any kind of cooling water in large power plant condenser tubing.

Pipe Toughness. Pipe toughness is the ability of piping to absorb impact without brittle rupture. Service metal temperature is important in design, as most pipe metals have a transition range over which ductile behavior changes to brittle behavior on impact as the temperature drops.

Gray and Ductile-Iron Pipe. Cast-iron pipe has been the standard for water distribution systems worldwide for many years. There are more miles of this pipe in use today than any other pipe. Two types of cast iron commonly found in distribution systems are gray cast-iron pipe (CIP) and ductile-iron pipe (DIP). (In this text, CIP is used as the abbreviation for gray cast-iron pipe; it does not stand for cast-iron pipe in general.)

Gray cast-iron pipe is strong but brittle, usually offers a long service life, and is reasonably maintenance free. Ductile-iron pipe resembles CIP in appearance and has many of the same characteristics. It differs from CIP in that the graphite is distributed in the metal in spheroidal or nodular form, that is, in ball-shape form rather than in flake form. This is achieved by adding a material called an innoculant, usually magnesium, to the molten iron. Ductile-iron pipe is much stronger, tougher, and more ductile than CIP. Gray cast-iron pipe has not been produced since 1980, due to the increased reliability of DIP, but is still used in the manufacture of valves and fittings.

Although unlined cast iron has a certain resistance to corrosion, aggressive waters can cause the pipe to lose carrying capacity through corrosion and tuberculation. The process for lining pipe with a thin coating of cement mortar made it possible to minimize tuberculation and maintain the carrying capacity of the pipe. The cement-mortar lining is approximately ⅛ in (3 mm) thick and adheres to the pipe. The lined pipe may be cut or tapped without damage to the lining. Ductile-iron pipe internal lining can be cement mortar. Various thermoplastic and other epoxy-lined pipe are also available but are expensive. Generally these would be used to handle fluids considerably more corrosive than water. Bituminous external coating and polyethylene wraps are methods commonly used to reduce external corrosion.

Ductile-iron pipe is available with standard wall thickness (referred to as TC) in diameters of 4 in (100 mm) and larger. The standard lengths are 18 and 20 ft (5.5 and 6.1 m). Ductile-iron pipe is strong and can withstand the working pressures found in distribution systems. It is also durable and can be cut and tapped in the field.

CIP and DIP Joints. Gray cast-iron and ductile-iron joints of the following types have been used to join pipe lengths together (listed in order of development):

- Flanged joints
- Bell-and-spigot joints
- Mechanical joints
- Ball-and-socket or submarine joints
- Push-on joints
- Bolted retainer-gland joints, to prevent pullout
- Push-on joints with restrained gaskets to prevent pullout

Flanged joints are easy to make and require no special tools. They are used aboveground in water plants, pump houses, and other places where rigidity, self-restraint, and tightness are required. Flanged joints will not flex and are not normally used underground.

Mechanical joints are made by bolting a moveable follower ring on the spigot to a flange on the bell and compressing a rubber gasket to form a tight seal. The mechanical joint is less economical than previously mentioned joints but is easily made and requires no special skill. Since the bell-and-spigot ends need not fit tightly, each joint can be made to deflect slightly.

Bell-and-socket joints are special-purpose joints most commonly used for submerged installations. Their great advantage is that they can accommodate large deflections (up to 15°). This makes them very useful for pipe lines laid across mountainous terrain or under rivers. Boltless flexible-pipe joints, designed on the brass-and-socket principle, are also available.

Push-on joints are the most popular joints in water-distribution-system installation today. The joint consists of a bell with a specially designed recess to accept a rubber ring gasket and a beveled-end spigot. The joint offers ease of installation, and when made up, the rubber ring gasket is compressed to produce water tightness and locked in place against further displacement. Push-on joints are available in several designs. In addition to ease of installation and water tightness, the joint permits deflections of 3° to 5°, depending on the design, for installation on a curve or irregular terrain. Small diameters may be assembled by hand; larger sizes usually require mechanical aids. For detailed discussion on the above joints, refer to Chap. A2.

Steel Pipe and Reinforced Concrete Pipe. Steel pipe and reinforced concrete pipe are sometimes used as large feeder mains in water-distribution systems.

Plastic Pipe. Plastic pipe is also used in water-distribution applications. Plastic pipe was first introduced in the United States around 1940.

Plastic pipe materials include polyvinyl chloride (PVC), chlorinated polyvinyl chloride (CPVC), polyethylene (PE), and a crylonitrile-butadiene-styrene (ABS). ASTM and AWWA standards cover PVC pipe in sizes from NPS 4 to 12 (DN100 to 300) in diameter. Polyvinyl chloride pipe is a rigid pipe manufactured by an extrusion process. Fittings are made by a mold process. It is available in diameters up to NPS 36 (DN900); lengths of 20–40 ft (6–12 m); and various types, grades, and pressure ratings. Within a given nominal pipe diameter, there are several equivalent systems for specifying internal and external diameters. Larger than NPS 12 (DN300) plastic pipe is normally specified by a sizing system other than the iron-pipe size (IPS) system.

The AWWA standard is based on outside diameter, the same as DIP. A new sizing system, termed the standard dimension ratio-pressure rated (SDR-PR) system, is a ratio of the outside pipe diameter to wall thickness. See Table C1.5. For more detailed discussion of thermoplastic pipe, refer to Chap. D1.

The SDR-PR system recognizes the strength properties of plastic and allows pipe of one pressure rating to be available in various sizes. State and local regulations should be checked to determine what types and sizes of plastic pipe are approved for a particular application.

Manufacturers' recommendations should be consulted when tap diameters exceed NPS 2 (DN50).

PVC pipe may be joined by a bell-and-spigot push-on joint or by a solvent-weld joint. Refer to Chap. D1 of this handbook.

Steel Pipe. Application may dictate the need for steel piping to be lined or coated with a plastic, tar, plastic-encapsulated cement, or rubber. ASME B31.1 App. IV, Corrosion Control for ASME B31.1—Power Piping Systems provides guidelines for the control of corrosion of steel piping.

The American Water Works Association likewise provides guidelines and standards for coating and lining potable water lines for corrosion protection. Also, refer to Chaps. B9, B10, B11, and B12.

Special applications might require the use of stainless steel, ductile iron, copper, copper alloys, plastic, fiberglass, and aluminum-alloy pipe. Utilization of these materials is generally based on their corrosion-resistance properties and ease of installation.

Copper is widely used in service connections for potable water. Heat-exchanger tubing is a common use for nonferrous metals, including copper, copper-nickel alloys, titanium, and aluminum.

Copper and its alloys, e.g., brass, are useful in this application because of their good thermal conductivity and favorable cold or hot working properties and corrosion resistance.

Aluminum's low density and relatively high strength of its alloys give it good corrosion resistance and good working properties.

Titanium and its alloys have strength comparable to alloy steels at 60 percent of its weight. Corrosion resistance is superior to that of aluminum and even stainless steel.

Expansion, Flexibility, and Support

Expansion and Flexibility. Water systems piping shall have adequate flexibility to account for thermal expansion. Water systems operating under low temperature (less than 250°F [121°C]) and low pressure (less than 300 psig [2070 kPa(gage)])

TABLE C1.5 PVC Type I Pressure Rated Pipe

Nominal pipe size (DN)	od	Min wall	Average id	Nominal weight per ft
SDR 26 NSF—W.P. 160 PSI (Water @ 73.4°F)				
½ (15)	See SDR 13.5			
¾ (20)	See SDR 21			
1 (25)	1.315	0.060	1.175	0.164
1¼ (32)	1.660	0.064	1.512	0.221
1½ (40)	1.900	0.073	1.734	0.284
2* (50)	2.375	0.091	2.173	0.432
2½* (65)	2.875	0.110	2.635	0.622
3* (80)	3.500	0.135	3.210	0.915
3½ (90)	4.000	0.154	3.672	1.183
4* (100)	4.500	0.173	4.134	1.494
5 (125)	5.563	0.214	5.109	2.288
6* (150)	6.625	0.255	6.085	3.228
8* (200)	8.625	0.332	7.921	5.468
10* (250)	10.750	0.413	9.874	8.492
12* (300)	12.750	0.490	11.710	11.956
14 (350)	14.000	0.538	12.860	14.430
16 (400)	16.000	0.615	14.696	18.810
18 (450)	18.000	0.692	16.534	23.860
20 (500)	20.000	0.769	18.370	29.470
24 (600)	24.000	0.923	22.043	42.520
SDR 41—W.P. 100 PSI (Water @ 73.4°F)				
18 (450)	18.000	0.439	17.070	15.370
20 (500)	20.000	0.488	18.970	18.920
24 (600)	24.000	0.585	22.748	27.320
SDR 21 NSF—W.P. 200 PSI (Water @ 73.4°F)				
½ (15)	See SDR 13.5			
¾ (20)	1.050	0.060	0.910	0.129
1 (25)	1.315	0.063	1.169	0.170
1¼ (32)	1.660	0.079	1.482	0.263
1½ (40)	1.900	0.090	1.700	0.339
2 (50)	2.375	0.113	2.129	0.521
2½ (65)	2.875	0.137	2.581	0.754
3 (80)	3.500	0.167	3.146	1.106
3½ (90)	4.000	0.190	3.596	1.443
4 (100)	4.500	0.214	4.046	1.825
5 (125)	5.563	0.265	5.001	2.792
6 (150)	6.625	0.316	5.955	3.964
8 (200)	8.625	0.410	7.755	6.679
SDR 13.5 NSF—W.P. 315 PSI (Water @ 73.4°F)				
½ (15)	0.840	0.062	0.696	0.104

Source: Harvel Plastics Inc. Product Bulletin 112/401, Effective 7.1.87, Revised 1/1/89, Harvel Plastics, Inc.

conditions are considered to have adequate flexibility if the following conditions are satisfied:

$$\frac{Dy}{(L - U)^2} \leq 0.03 \tag{C1.18}$$

where D = Nominal pipe diameter, in (mm)
y = Thermal growth of the pipe, in (mm)
L = Length of pipe in the system, ft (m)
U = Distance between rigid supports, ft (m)

If the conditions above are not met, a detailed analysis of the piping system may be needed. The reader is referred to Chap. B4, Stress Analysis of Piping Systems, for more information.

In piping systems without adequate flexibility, thermal expansion may lead to failure of piping or anchors. It may also lead to joint leakage and excessive loads on nozzles. The thermal expansion of piping can be controlled by use of proper locations of anchors, guides, and snubbers. Where expansion cannot be controlled, flexibility is provided by use of bends, loops, or expansion joints (bellows or slip-joints).

Detailed calculations for underground water-piping systems are not needed unless significant settlement, seismic, or temperature changes are expected. Buried piping, although supported throughout by proper bedding and backfilling procedures, also requires thrust restraint for unrestrained joints at changes of direction.

Pipe Support Systems. Standard component supports are normally used to carry dead weight and thermal expansion loads. The dead weight and thermal supports typically used are defined in MSS-SP-58. Part B, Chap. B5 of this handbook discusses pipe-support design and selection in detail.

Valve Selection. In water-piping systems, valves are generally used for isolating a section of a water main, draining the water line, throttling fluid flow, regulating water-storage levels, controlling water hammer, bleed off of air, or preventing backflow. Refer to Chap. A10.

Isolation. Gate valves are used to isolate specific areas of the system during repair work or to reroute water flow throughout the distribution system. An open gate valve allows water to flow through in a straight line. The valve may be closed during an emergency, such as a water-main break, or during routine maintenance.

Gate valves commonly used in water distribution systems are the iron-body bronze-mounted (IBBM) nonrising-stem (NRS) gate valves. Buried gate valves are usually nonrising-stem valves. In situations where an operator will need to know by observation whether a valve is open or closed, a rising-stem valve with an outside screw and yoke (OS&Y) is often used.

Service stops valves are used to shut off service lines to individual homes or businesses. Specific types of service stops include the corporation stop, which is tapped into the main, and the curb stop, which is located near the property line. Access to the curb stop is through a curb box. Small plug valves are used as curb stops and corporation stops.

Butterfly valves are also used for isolation purposes. Because the disk remains in the water path in all positions, the butterfly valve may create a slightly higher head loss than the gate valve. The position of the disk also makes it difficult to clean scale from a pipeline because the pig or swab is blocked by the valve disk. However, butterfly valves open easily, as the water pressures acting on one-half of the upstream side of the disk tends to force it open, balancing the pressure on the other half, which tends to force it closed. The cost of NPS 16 (DN400) and larger butterfly valves is less than the cost of large gate valves, as large gate valves normally require reduction gears, a bypass valve, rollers, tracks, and scrapers. Butterfly valves should be located away from sources of turbulence to preclude damaging effects of turbulence to the disk.

Draining the Water Line. Drain or blow-off valves may be installed at low points to flush sediment from the main or to drain the entire main. Gate valves are commonly used as drain valves. Where rapid draining is not important, globe valves may be used to drain lines where sediment accumulation is not a problem. Though quicker to operate and less costly to repair than gate valves, NPS 3 (DN80) and larger globe valves are less economical.

Throttling Flow and Regulating Water-Storage Levels. In addition to on-off control of flow, globe valves may be used to regulate or throttle flow. This can be done manually, although it is usually done automatically. For throttling under low-flow and low-pressure conditions, butterfly valves are also used. Large-plug valves may be used for throttling.

An altitude valve is a type of control valve, diaphragm or piston type, used to control the level of water in a tank supplied from a pressure system. There are two general types of altitude valves: single acting and double acting.

A single-acting altitude valve is used for filling the tank. A bypass line with check valves around the altitude valve is needed to permit backflow out of the tank and into the distribution system when the inlet pressure is lower than the tank. The tank discharges through a separate line or through a check valve in a bypass line around the altitude valve.

A double-acting altitude valve allows to flow both to and from the tank. When the tank becomes full, the valve closes to prevent overflow. When the distribution pressure drops below the pressure exerted by the full tank, the valve opens to discharge water into the distribution system.

Controlling Water Hammer. In a water distribution system, opening or closing a valve too fast can cause water hammer. This phenomena is discussed in Chap. B8. Pressure-relief valves are used to help control water hammer by releasing some of the energy that is created by a sudden stop in flow. They are fitted with an adjustable spring to set the maximum pressure of the line. When line pressure becomes greater than the set pressure, the valve opens until the pressure is equalized. Other choices include standpipes open to atmosphere and various kinds of surge tanks.

Bleed Off of Air and Breaking Vacuum. Air tends to collect in water lines. Under the pressure of the distribution system, air dissolves and can reappear as microscopic air bubbles, which gives water a cloudy appearance. A more common operating problem occurs when air collects in high places in the distribution system producing air pockets. Air pockets effectively reduce the area of pipe through which water flows, causing an affect known as *air binding*. The result is pressure loss and increased pumping costs.

Air vacuum and air release valves can be installed to eliminate these problems in pumping stations where air can enter the system and at high points where it can collect. Air-relief/release valves solve the problem by automatically venting any air that accumulates. Conversely, vacuum caused by column separation can be broken with vacuum-relief valves. Combination air and vacuum relief valves are used for this application.

Figure C1.13 shows a spring-loaded check valve that opens during forward flow and is closed by the spring when flow stops. When pressure drops to a low value, a second valve opens and allows air to enter this breaker. With this arrangement,

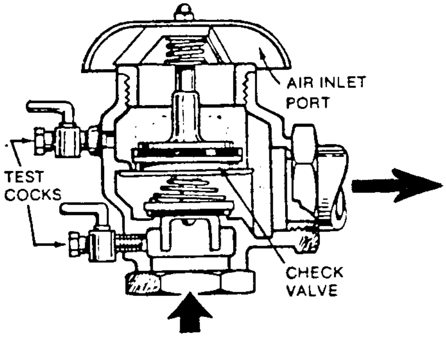

FIGURE C1.13 Pressure and vacuum breaker.

the breaker can remain under supply pressure for long periods without sticking and can be installed upstream from the last shut-off valve.

Figure C1.14 shows an atmospheric vacuum breaker, consisting of a check valve operated by water flow and a vent to the atmosphere. When flow is in the forward direction, the valve lifts and shuts off the air vent; when flow stops or reverses, the valve drops to close the water-supply entry and open an air vent.

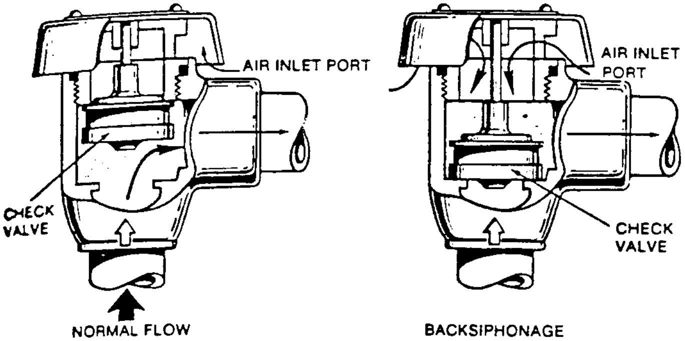

FIGURE C1.14 Atmospheric vacuum breaker.

Preventing Backflow. Backflow in a pump discharge line can be prevented by installing a check valve to allow flow in one direction only—away from the pump. However, check valves can contribute to water hammer problems, especially in the case of pump failure. Proper precautions to avoid or relieve these surges must be taken.

Backflow, or reversed flow, could result in contaminated or polluted water entering the water system. Backflow can occur through a cross-connection under two conditions: back pressure and back-siphonage (see Fig. C1.15). If a pressurized nontreated system is cross connected with a lower-pressure treated water system, then the pressure in the nontreated system can force nontreated fluid into the treated supply. This situation is referred to as backflow due to back pressure.

Valves are used as backflow-prevention devices. A device that can be used in every cross-connection situation and with every degree of risk is the reduced-

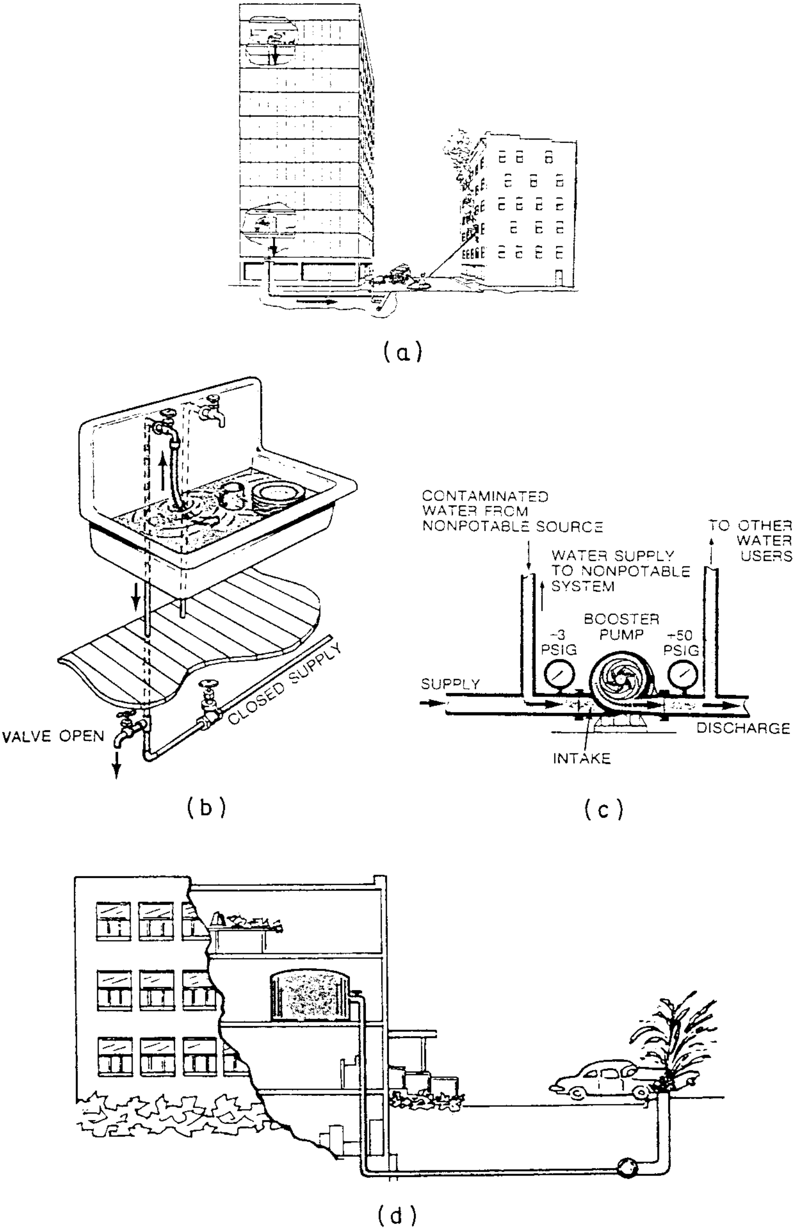
(a)
VALVE OPEN
CLOSED SUPPLY
(b)
CONTAMINATED WATER FROM NONPOTABLE SOURCE
WATER SUPPLY TO NONPOTABLE SYSTEM
TO OTHER WATER USERS
BOOSTER PUMP
-3 PSIG
+50 PSIG
SUPPLY
DISCHARGE
INTAKE
(c)
(d)

FIGURE C1.15 Examples of backflow due to back siphonage. (*a*) Backsiphonage due to pressure loss; (*b*) backsiphonage—hose forms cross connection; (*c*) backsiphonage from a booster pump; (*d*) backsiphonage due to a broken main. (*Introduction to Water Distribution Principles and Practices of Water Supply Operations,* American Water Works Association, 1986.)

pressure-zone backflow. This device consists of two spring-loaded check valves with a pressure-regulated relief valve located between them. Two check valves, even though well designed and constructed, are not considered sufficient protection, because all valves leak from wear or obstruction. For this reason, a relief valve is positioned between the two checks. Typical backflow conditions are illustrated in Fig. C1.16.

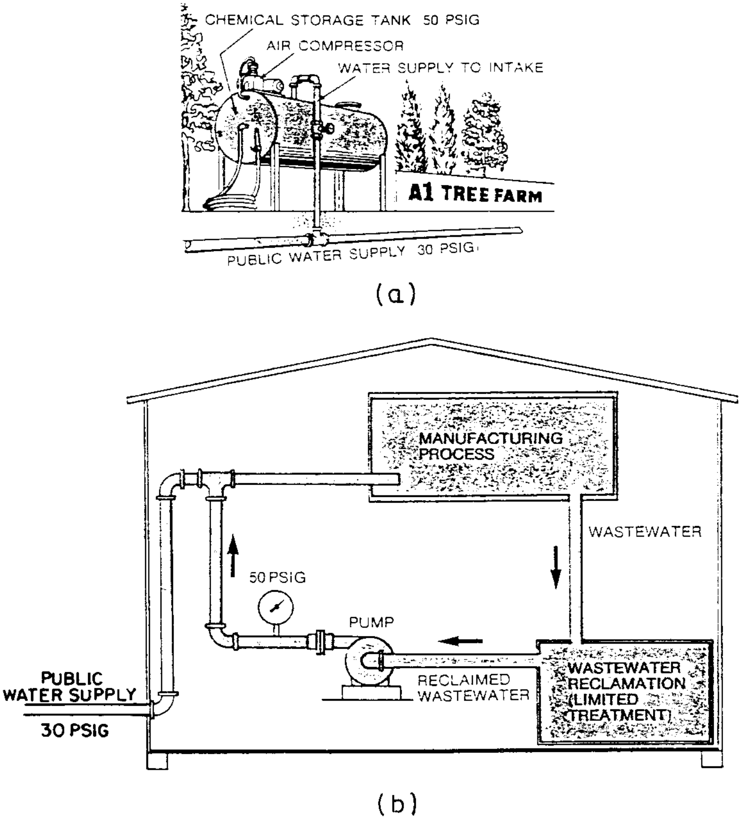
CHEMICAL STORAGE TANK 50 PSIG
AIR COMPRESSOR
WATER SUPPLY TO INTAKE
A1 TREE FARM
PUBLIC WATER SUPPLY 30 PSIG
(a)
MANUFACTURING PROCESS
WASTEWATER
50 PSIG
PUMP
RECLAIMED WASTEWATER
WASTEWATER RECLAMATION (LIMITED TREATMENT)
PUBLIC WATER SUPPLY
30 PSIG
(b)

FIGURE C1.16 Examples of backflow due to back pressure. (*a*) Cross connection between pressurized nonpotable system and lower pressure potable system; (*b*) backflow from recirculated system. (*Introduction to Water Distribution Principles and Practices of Water Supply Operations,* American Water Works Association, 1986.)

If a treated water-distribution system is cross connected to a nontreated source that is open to the atmosphere, and if the pressure in the treated system falls below atmospheric pressure, then the pressure of the atmosphere can force the nontreated fluid into the treated supply. This situation is called backflow due to *backsiphonage.* Examples of backsiphonage conditions include overpumping by fire or booster pumps, undersized distribution piping, and a broken main. When backsiphonage occurs, the partial vacuum pulls liquid back into the supply line. If air enters the line between a cross-connection and the source of the vacuum, then the vacuum will be broken and backsiphonage will be prevented.

Water Hammer and Surge Control. The problem of water hammer in water piping systems consists of containing the pressure and dissipating the water-flow energy. For example, the energy necessary to move the water through the piping is supplied by the pump. If a valve is suddenly closed at the end of the discharge line, the moving column of water is brought to a stop at the valve. The kinetic energy contained in the column of water, originally given to the water by the pump, is still present and must be dissipated. The column of water compresses, the pressure rises, and some of the kinetic energy is transformed to internal energy. The higher water pressure acts upon the pipe wall and does work in stretching it, but only a small percentage of energy will be lost in this. The pipe will obey the laws of vibration and return most of the energy to the water.

The water-hammer effects are obtained from equations that define relations between head and flow in the discharge line during the transient flow condition which results from water-hammer wave action.

Water-column separation might occur at high points near the hydraulic gradient on long discharge lines. This condition can create high-pressure conditions at the moment of rejoining of the separated water columns.

TABLE C1.6 Waterhammer Velocity in Piping Systems (a, wave velocity in feet per second)

D/t	Steel ($E = 28 \times 10^6$ psi)	Cast iron ($E = 16 \times 10^6$ psi)	Transite ($E = 3.4 \times 10^4$ psi)
20	4300	4100	3000
40	4000	3600	2300
60	3800	3350	2000
80	3600	3100	1750
100	3400	2900	1600
150	3100	2500	1300
200	2800	2250	1150
250	2600	2050	
300	2400		

Table C1.6 gives the water-hammer wave velocity as a function of diameter-to-thickness ratios for three different piping materials encountered frequently in water-supply or distribution systems. In this tabulation, a is the wave velocity in ft/sec (m/sec), D/t is the dimensionless ratio of diameter to thickness, and E is the modulus of elasticity.

If a valve is closed in the time of one wave cycle (in the time a pressure wave travels to the other end of the pipeline and returns to the closing valve) or less, then the water hammer should be calculated on the basis of instant valve closure.

To determine time for the wave cycle, use

$$T = \frac{2L}{a} \tag{C1.19}$$

To determine water hammer for instantaneous valve closing, use

$$h = \frac{aV}{g} \tag{C1.20}$$

where T = time for one wave cycle, sec
L = pipeline length, ft (m)
h = water-hammer head above static head, ft (m)
a = velocity of pressure wave, ft/sec (m/s)
V = water velocity at instant before valve closure, ft/sec (m/s)
g = 32.2 ft/sec^2 (9.81 m/sec^2)

To determine water hammer for slower valve closing, use

$$h_2 - h_1 = \frac{a(V_1 - V_2)}{g} \tag{C1.21}$$

where h_2 = pressure after partial closing of valve, ft (m)
h_1 = pressure before start of valve closing, ft (m)
$h_2 - h_1$ = pressure rise due to water hammer, ft (m)
V_1 = water velocity before start of valve closing, ft/sec (m/s)
V_2 = water velocity after partial closing of valve, ft/sec (m/s)

The phenomenon and damaging effects of water hammer is discussed in detail in Part B, Chap. B8 of this handbook.

A means of eliminating water hammer is to permit the liquid to surge into a tank or discharge to atmosphere. To quickly suppress all the momentum in a long pipe system would require high-pressure piping, which is very costly. With a surge tank or relief valve as near the valve as feasible, the development of excessive pressure in this region is prevented.

Surge tanks may be classified as simple, orifice, and differential. The simple surge tank has an unrestricted opening into it and must be of adequate size so that it will not overflow and so it will not be emptied to permit air to enter the pipeline. An orifice surge tank has a restricted opening between pipeline and tank and allows more rapid pressure changes in the pipeline. A more rapid pressure change causes a more rapid adjustment of flow. A differential surge tank is a combination of an orifice surge tank and a simple surge tank of small cross-sectional area.

Surge tanks under air pressure are utilized in certain circumstances, such as after a reciprocating pump. They are generally uneconomical for large pipelines.

Relief valves are available in various types from spring loaded to control blowdown diaphragm types.

Air Binding. Air which accumulates in water piping will reduce the effective cross-sectional area for water flow and thus increase pumping costs through the resulting extra head loss. Air enters the piping system from several sources, such as the release of air from the water, air carried in through vortices into the pump suction, air leaking in through joints that may be under negative pressure, and having air present in the piping system before filling.

The water from the water source may be nearly saturated with air. If the temperature of this water is raised and the pressure is lowered by the siphon action, the water will release most of its air. However, this air release is not instantaneous but proceeds on a time-rate release and is therefore dependent upon the length of time the water remains in the piping. Experience indicates that the actual air release in a circulating water system of a conventional power-generating plant is probably on the order of 10 percent of calculated theoretical release.

On gentle downward slopes, a continuous air pocket may form along the top of the pipe for the entire slope. In a sharper downward slope, several air pockets may form, each air pocket terminating in a hydraulic jump. Slopes may require a water velocity in excess of 10 fps (3 m/s) to assure that the piping remains free of air. In a 90° drop, an air pocket may form in the upper portion of the bend and a velocity in excess of 7 fps (2 m/s) may be required for air elimination. Connections for air vents should be provided at all high points in the piping system and along sloping piping of considerable length. Air-release valves at the high points of these systems' mains eliminate air pockets.

Pipeline Alignment. Alignment, both horizontal and vertical, is one of the most important considerations in the design of a pipeline system. The pipeline must be buried deep enough to prevent freezing of pipe contents as well as to prevent flotation where the pipe is in a high-groundwater environment and may be empty on occasion. The designer must provide an alignment that provides sufficient clearance from other existing and proposed pipelines and structures, minimizes need for fittings, and avoids highways or other paving when possible. Under important roadways, the highway authorities may require the pipe to be placed in a casing. Additionally, the alignment should be such that it minimizes damage to life and property in case of pipeline failure.

Finally, changes in pipeline direction or change in fluid velocity cause unbalanced forces in the pipeline. To provide pipeline stability, these forces must be restrained, using either thrust blocking or harnessing joints of enough pipe lengths to mobilize sufficient friction to counteract unbalanced forces.

Corrosion and Erosion Effects

Corrosion. All raw water coming from wells, rivers, lakes, or ocean is an extremely dilute water solution of mineral salts and gases. The salts are mineral matter dissolved by water flowing over and through the earth layers. The salts are mainly sulfates, bicarbonates, chlorides of calcium, sodium, and magnesium. These minerals give water its hardness (destroying soap and preventing lather) and precipitate as a white lime-type scale. The dissolved gases are atmospheric oxygen and carbon dioxide, picked up by water-atmosphere contact (e.g., spray, raindrops, and ammonia from decaying vegetable matter).

The dissolved gases are the prime agents of chemical corrosion that act on the metals of piping systems. The oxygen attacks the iron or steel, and the process is accelerated by the carbon dioxide. The rate and extent of the chemical corrosion are influenced by the amounts of mineral salts dissolved in the water.

The calcium content of water is used to measure the tendency of water to corrode or form scale. For this purpose, values are assigned to the calcium content and the alkalinity of the water. Adjustments are made for temperature and the effect of totally dissolved solids. The resultant value is compared with the observed pH of the water to determine whether it is corrosive or scaling. This is basically the Langelier saturation index as reported by Larson-Buswell in the *Journal of the American Water Works Association*, Vol. 28.

The water is corrosive when the Langelier index (calcium carbonate saturation index) is minus (−). The water analysis will generally, but not always, show a pH value below 7 (acidic).

The scaling in water lines occurs when the Langelier index is plus (+). The water analysis will generally show a pH value above 7 (basic).

The precipitation of calcium carbonate as a scale or film thickness may be desirable as a means of protection against corrosion if the rate of buildup is sufficiently low. Calcium carbonate is undesirable on heat-transfer surfaces. Since temperature lowers the solubility of calcium carbonate and calcium sulfate, the Langelier index will vary for colder water and for warm water.

The exterior of unprotected buried metallic pipe is subject to similar chemical action due to exposure to water. In addition, the pipe exterior is susceptible to attack by aerobic and anaerobic bacteria, galvanic action, and stray electric currents. The chemical action on the pipe exterior may be more intense because of concentration of oxygen, salts, and other chemicals leached out of the surrounding earth by ground water.

Some forms of anaerobic bacteria that thrive only in the absence of free oxygen obtain their oxygen by the chemical breakdown of oxygen compounds in the earth, with the resultant production of substances such as hydrogen sulfide that will corrode the base-metallic buried pipeline. There are also many types of aerobic bacteria that produce sulfuric acid, sulfate, and ferric hydroxide, compounds that are all corrosive to steel or iron. Organic soil should be kept away from the vicinity of the pipeline to minimize possibility of this corrosive action.

Also, when iron or steel is in contact with a more cathodic material, for example, copper or brass, a galvanic cell is formed, electrolysis results, and the corrosion rate of steel or iron increases. If iron or steel is in contact with a more anodic material, for example, zinc, the zinc will be the affected material and the corrosion rate of the steel or iron will decrease.

There is some natural resistance to chemical corrosion of the base-metallic pipe materials. The chemical-corrosion product, an oxide film, may build up sufficiently to slow down or prevent further corrosion.

The natural coating characteristics of the most commonly used piping materials are mentioned briefly below.

On cast iron, the rust (iron oxide) builds up into a strong adhesive coating that finally forms a barrier sufficient to stop or slow down further corrosion. The higher silicon cast iron has the best characteristics in this respect.

On steel, the rust powders and flakes off easily and does not build up into an adhesive, providing sufficient protective coating.

For concrete and cement piping, the corrosion is of a different form. These materials are subject to leaching of the free lime from the cement, deterioration in alkali soils, and attack by organic growth.

Cathodic Protection. If no protective coating is used, or if a low-cost, limited-life coating has been selected, cathodic protection may be considered as a means of limiting the main agent of corrosion, which is the electro-chemical process. In this process, the moist earth is the electrolyte, two dissimilar materials are the anode and the cathode, and the pipe wall between them completes the electric circuit. This process may be set in motion in a number of different ways, among which are dissimilar metals, galvanic action of a single metal due to dissimilar soils, variation in moisture and chemical content of soil, nonuniformity of metal caused by mill scale, surface scarring, welding, and even temperature differentials.

The current flows from the anode to the cathode and causes corrosion at a rate greater than that which would occur by normal chemical means. Corrosion rate is increased at the anode end and decreases at the cathode end. The anode is the point or area at which the current leaves the metal, and the cathode is the point at which the current enters the metal.

The electro-chemical galvanic series (Table C1.7) gives the relation between metals. The metal listed nearer the top of the table is the anode that will waste away. The metal nearer the bottom of the table is the cathode and will be protected. The farther from each other the metals are located in the table, the greater the potential difference will be between them and the greater the corrosion rate of the anode end.

A typical example of the galvanic action of dissimilar metals is represented by a steam condenser having a steel shell, steel-tube sheets, and copper-alloy tubes.

TABLE C1.7 Galvanic Series

Anode end (least noble, the wasting end)
Magnesium
Magnesium alloys
Zinc
Aluminum
Aluminum alloys
Cadmium
Carbon steel
Cast iron
Stainless steel (active)
Soft solder
Tin
Lead
Nickel (active)
Brasses
Copper
Bronzes
Nickel-copper alloys
Nickel (passive)
Stainless steel (passive)
Titanium
Silver solder
Silver
Graphite
Gold
Platinum
Cathode end (most noble, the protected end)

The steel is nearer the anode end than is the copper alloy and, as a consequence, the corrosion of the steel tube sheets and shell is accelerated. Always, that metal which is higher in the galvanic series will waste away.

Cathodic protection is a means of diverting the electro-chemical corrosion from the pipeline to wasting anodes.

There are two methods of providing cathodic protection. The less costly installation is the galvanic method based on a natural battery action between the position of metals in the electro-chemical table. An anode or wasting piece is deliberately used. This approach requires very careful analysis of all the varying conditions involved.

The second and more costly cathodic protection is the impressed-current method that requires an external source of electricity. The impressed-current renders the piping cathodic to the surrounding soil by a controlled difference of potential.

In locations where there may be stray currents, the installation of removal wires at designated points so that the current may leave the pipeline should be considered. In other words, stray currents are utilized to provide cathodic protection for the pipeline.

Protective Coatings. Since corrosion of metal is a surface reaction, it is obvious that, if a protective coating which is continuous, impervious, chemically inert, and electrically insulating can be bonded to the interior or exterior of the piping, corrosion cannot take place on the pipe surface as long as the protective coating remains in place undamaged and without cracks or pinholes.

The basis of selection for the best coating differs for the interior and exterior of the pipe.

The coating on the interior of the pipe, to perform its function properly, would be selected for its chemical inertness, imperviousness, adhesiveness, adjustment to pipe deformation, and resistance to erosion caused by the flowing water.

The coating on the exterior of the pipe would be selected for its chemical inertness, electrical resistance, imperviousness, adhesiveness, adjustment to pipe deformation, and resistance to shear and compression due to varying earth conditions.

Galvanizing. The zinc used for galvanizing pipe is on the anodic (wasting) or electro-chemical protective side of the steel, and it is wasted or changed to zinc compounds before the steel pipe will be attacked.

Coal-Tar Enamel. Specification AWWA C203 covers the coal-tar enamel protective coatings for steel water pipe. This standard delineates the specifications for the materials involved, method of application to the inside and outside of the piping, the thickness required, protection of the coatings, testing, and other specifications.

The type of enamel is specified as AWWA coal-tar enamel and is described in this standard with full characteristics and the ASTM tests required.

Erosion. Erosion effects in water piping systems is fundamentally an accelerated form of corrosion and as such is distinguishable from mechanical processes such as erosion abrasion and cavitation. Single-phase and two-phase erosion-corrosion differ in that a second damage process (droplet impingement) is available under two-phase conditions, and this can accelerate the overall rate of attack. In the most severe cases of two-phase erosion-corrosion, rapid rates of metal loss (approximately 40 mils/year) have been reported.

Erosion is observed only when specific combinations of material, water chemistry, and hydrodynamic conditions coexist. Most problems have been associated with plain carbon or very highly alloyed steels having a low content of dissolved oxygen and a pH less than about 9.3. Detrimental erosion occurs at temperatures within the range of 212°F to 525°F ([100°C to 274°C] but most rapidly between 260°F and 400°F [127°C and 204°C]) and is restricted to locations where the mass-transfer coefficient is high. This can be either as a result of a high-fluid flow rate or because of the presence of a geometric flow discontinuity such as an impingement orifice, bend, tee, et cetera.

Erosion under both single-phase and two-phase conditions can lead to a characteristic *scalloped* surface appearance, and in carbon steels the pearlite is preferentially attacked. Corrosion films are typically very thin and the surface sometimes appears polished, in marked contrast to adjacent regions which generally are more heavily oxidized.

A number of laboratory investigations of erosion have been conducted (almost exclusively in single-phase water flow only), and major variables affecting the process have been identified and their effects documented. Quantitative mechanistic understanding is not yet complete, but empirical predictive models are available. Laboratory studies have shown the feasibility of a variety of mitigating actions and remedies, and several of these have been applied successfully. The physical picture of the erosion process that has emerged from this work is illustrated in Fig. C1.17. As can be seen, erosion can be viewed as a flow-accelerated corrosion process characterized by the presence of a poorly adherent magnetite film.

The rate of metal removal depends on interactions between the rates of a number of subprocesses.

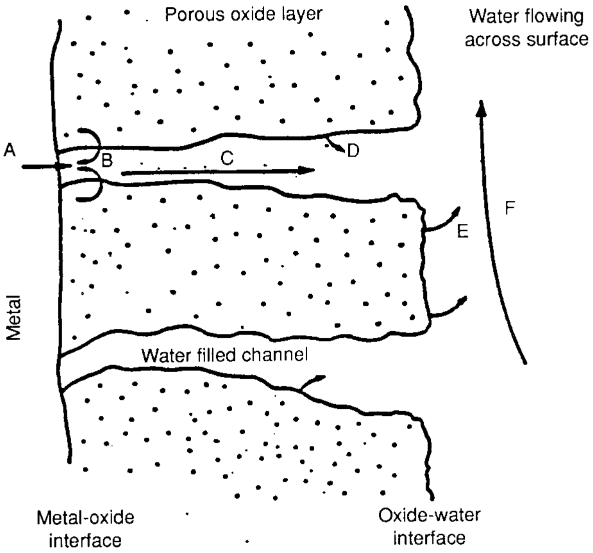

FIGURE C1.17 Phenomena occurring during erosion-corrosion.

The laboratory work shows that three main groups of variables affect the rate of metal loss by erosion under single-phase conditions:

- Material variables (chiefly the chemical composition)
- Water-chemistry variables (temperature, pH, oxygen concentration, impurity content)
- Hydrodynamic variables (flow rate, geometry)

Some largely empirical models have been developed (Ref. 5) and are capable of metal-loss predictions within the range of the data on which they are based.

Erosion occurs most readily in plain carbon steel. Austenitic stainless steels essentially are immune to erosion-corrosion. In ferritic steels, alloying elements such as molybdenum, copper and particularly chromium (even when present at levels of 1 percent or less) can greatly improve the erosion-corrosion resistance.

The effect of steel composition depends on the severity of hydrodynamic conditions; as conditions become more demanding, higher alloy contents are required to confer the same resistance to erosion-corrosion. However, in the relatively mild situation typical of feedwater piping, significant effects of small changes in material composition would be anticipated based on the laboratory data.

The effects on the erosion rates of water temperature, pH, and dissolved oxygen content have been studied by a number of investigators. For the orifice configuration tested, the temperature dependence at pH 9.05 has a flow-rate-dependent peak at about 284°F (140°C), suggesting that the erosion-corrosion rate is controlled by oxide dissolution kinetics at low temperatures and by mass-transfer limitations at higher temperatures. A marked decrease in erosion rate accompanies increases of pH.

Dissolved oxygen also has a marked effect in neutral water. Iron-release rates from carbon steel in 100°F to 400°F (38°C to 204°C) water at a flow rate of 6 ft/sec (1.8 m/s) have been shown to decrease by up to two orders of magnitude as oxygen concentration was increased over the range 1 to 200 ppb. Tests indicated that it is important to keep oxygen levels above 15 to 20 ppb, and oxygen dosing is a fairly common practice.

The effects on erosion of ionic impurities such as chlorides and sulfates have not been widely studied. In particular, there is little information which bears upon the question of whether a long prior period of adverse chemistry could have any irreversible effects.

Plant experience indicates that geometry and flow rate are important factors in erosion. The physical picture of the process shown in Fig. C1.17 suggests that the importance of geometry and flow rate rises through their influence on the rate of mass transfer of oxide dissolution products away from the oxide-water interface. Laboratory studies have confirmed that the mass-transfer coefficient is the controlling parameter; however, the exponent of the power function relating the erosion-corrosion rate and the mass-transfer coefficient is dependent on temperature. Since the mass-transfer coefficients for simple flow geometries can be calculated, the existence of these empirical relationships allows the erosion rate to be estimated for a variety of situations. However, local mass-transfer coefficients are sensitive to local geometrical discontinuities and at present can only be derived empirically.

Component redesign or flow-path geometry improvements, aimed at reducing the mass-transfer coefficient, can sometimes be used to remedy erosion-corrosion problems.

Referring to Fig. C1.17, the phenomena occurring during erosion is

A. Iron hydroxides are generated:

$$\mathrm{Fe} + 2\mathrm{H_2O} \rightarrow \mathrm{Fe(OH)_2} + \mathrm{H_2}.$$

B. Magnetite is formed according to the Schikorr reaction:

$$3\mathrm{Fe(OH_2)} \rightarrow \mathrm{Fe_3O_4} + \mathrm{H_2} + 2\mathrm{H_2O}.$$

C. A fraction of the hydroxides formed in step B and hydrogen generated in steps A and B diffuse along pores in the oxide.

D. Magnetite can dissolve in the pore.

E. Magnetite dissolves at the oxide-water interface.

F. Water flow removes the dissolved species by a convection mass transfer mechanism.

Example C1.3. The following presents a sample calculation of the rate of erosion-corrosion under single-phase flow conditions. The methodology used is based upon the work performed by Coney (Refs. 6 and 7).

Physical and flow conditions for this example are

Pipe outside diameter = 18.00 in (0.46 m)
Pipe inside diameter = 17.00 in (0.43 m)

Wall thickness (nom.) = 0.50 in (.013 m)
pH = 9
Pressure = 367 psig (2531 KPa) [gauge]
Temperature = 380°F (193°C)
Flow Rate = 5,000,000 lbm/hr (630 kg/s)

For these conditions the Reynolds number, Re, is

$$\mathrm{Re} = VD_H\rho/\mu \tag{C1.22}$$

where V = velocity, ft/sec (m/sec)
D_H = inside diameter, ft (m)
μ = dynamic viscosity, lbm/sec·ft (N·s/m^2)
ρ = density, lbm/ft^3 (kg/m^3)

Since the flow rate is known, the velocity can be calculated:

$$W = \rho AV \tag{C1.23}$$

or

$$V = \frac{W}{A\rho} \tag{C1.24}$$

where W = flow rate, lbm/hr (kg/sec)
A = flow area, ft^2 (m^2)

and

$$\mathrm{Re} = \frac{(55)\frac{\mathrm{lbm}}{\mathrm{ft}^3}\left(\frac{\mathrm{kg}}{\mathrm{m}^3}\right) \times (17)\frac{\mathrm{ft}}{\mathrm{sec}}\left(\frac{\mathrm{m}}{\mathrm{sec}}\right)\frac{17}{(12)\,\mathrm{ft}}\left(\frac{1}{\mathrm{m}}\right)}{9.66 \times 10^{-5}\frac{\mathrm{lbm}}{\mathrm{sec\text{-}ft}}\left(\frac{\mathrm{N\cdot s}}{\mathrm{m}^2}\right)} = 1.29 \times 10^7$$

$$V = \frac{(5 \times 10^6)\frac{\mathrm{lbm}}{\mathrm{hr}}\left(\frac{\mathrm{kg}}{\mathrm{sec}}\right) \times \frac{1\,\mathrm{hr}}{3600}\mathrm{sec}}{\frac{\pi}{4}\left(\frac{17}{12}\right)^2 \mathrm{ft}^2(\mathrm{m}^2) \times 55\frac{\mathrm{lbm}}{\mathrm{ft}^3}\left(\frac{\mathrm{kg}}{\mathrm{m}^3}\right)} = 17\ \mathrm{ft/sec,\ (m)/sec}$$

The mass-transfer rate is now calculated.

In order to calculate the mass-transfer coefficient, an empirical correlation must be used. The Berger and Hau correlation is used prediciting this coefficient. The recommended range of this correlation is $10^4 < \mathrm{Re} < 10^6$. This correlation will be used for two reasons:

1. The turbulent-flow mass-transfer correlations are based, by analogy, on heat-transfer correlations. And heat-transfer correlations of the same form as Berger and Hau typically are valid up to Re = 10^7.

2. In view of the limited mass-transfer data at very high Reynolds number, this was judged to be the most suitable correlation for this application.

The Berger and Hau (Ref. 8) correlation is

$$\mathrm{Sh} = 0.0165\ \mathrm{Re}^{0.86}\ \mathrm{Sc}^{0.33} \tag{C1.25}$$

where the Sherwood number and the Schmidt number are dimensionless numbers defined as

$$\mathrm{Sh} = \frac{KD_H}{d} \tag{C1.26}$$

$$\mathrm{Sc} = \frac{\mu}{\rho d} \tag{C1.27}$$

where K = mass-transfer coefficient, ft/sec (m/sec)
d = diffusivity, ft^2/sec (m^2/sec)

The diffusivity of dissolved species in water, d, is equal to about 135×10^{-9} ft^2/sec (m^2/sec) for the temperature of interest.

Thus,

$$\mathrm{Sc} = \frac{\mu}{\rho d} = \frac{9.66 \times 10^{-5}\left(\frac{\mathrm{lbm}}{\mathrm{sec\text{-}ft}}\right)\left(\frac{\mathrm{N \cdot s}}{\mathrm{m}^2}\right)}{55\left(\frac{\mathrm{lbm}}{\mathrm{ft}^3}\right)\left(\frac{\mathrm{kg}}{\mathrm{m}^3}\right) \times 135 \times 10^{-9}\left(\frac{\mathrm{ft}^2}{\mathrm{sec}}\right)\left(\frac{\mathrm{m}^2}{\mathrm{sec}}\right)} = 13$$

Using the Berger and Hau correlation and rewriting to solve for K,

$$K = \left(\frac{d}{D_H}\right)(0.0165)(\mathrm{Re})^{0.86}(\mathrm{Sc})^{0.33} \tag{C1.28}$$

Since everything is now known, K is calculated

$$K = \frac{\left(135 \times 10^{-9}\frac{\mathrm{ft}^2}{\mathrm{sec}}\right)\left(\frac{\mathrm{m}^2}{\mathrm{sec}}\right)}{\left(\frac{17}{12\,\mathrm{ft}}\right)\left(\frac{1}{\mathrm{m}}\right)}(0.0165)(1.37 \times 10^7)^{0.86}(13)^{0.33}$$

$$K = 0.005 \text{ ft/sec or } 1.53 \text{ mm/sec}$$

This mass-transfer coefficient is for a straight pipe. For a rupture occurring near a change in flow direction, the straight pipe value should be increased. Figure C1.18 presents a wide range of data showing the increase of heat and mass transfer with bends of various geometries. At the value corresponding to the elbow (0.5), the data range from about 0.4 to almost 2.0, with most of the data less than 0.7. To bound the problem, three calculations have been made. A low case at a value of 0.4, a midcase at a value of 0.55, and a high case at a value of 0.7. For a straight-pipe mass-transfer coefficient of 1.53 mm/sec, the low-, mid-, and high-mass transfer coefficients in the elbow are: 2.14, 2.35, and 2.60 mm/sec, respectively.

There is a large amount of experimental data correlating mass-transfer coefficient and erosion rate. The data are presented in Fig. C1.19. Using this figure, at the above values, and a pH of 9.0, the predicted erosion-corrosion rates are about 0.4,

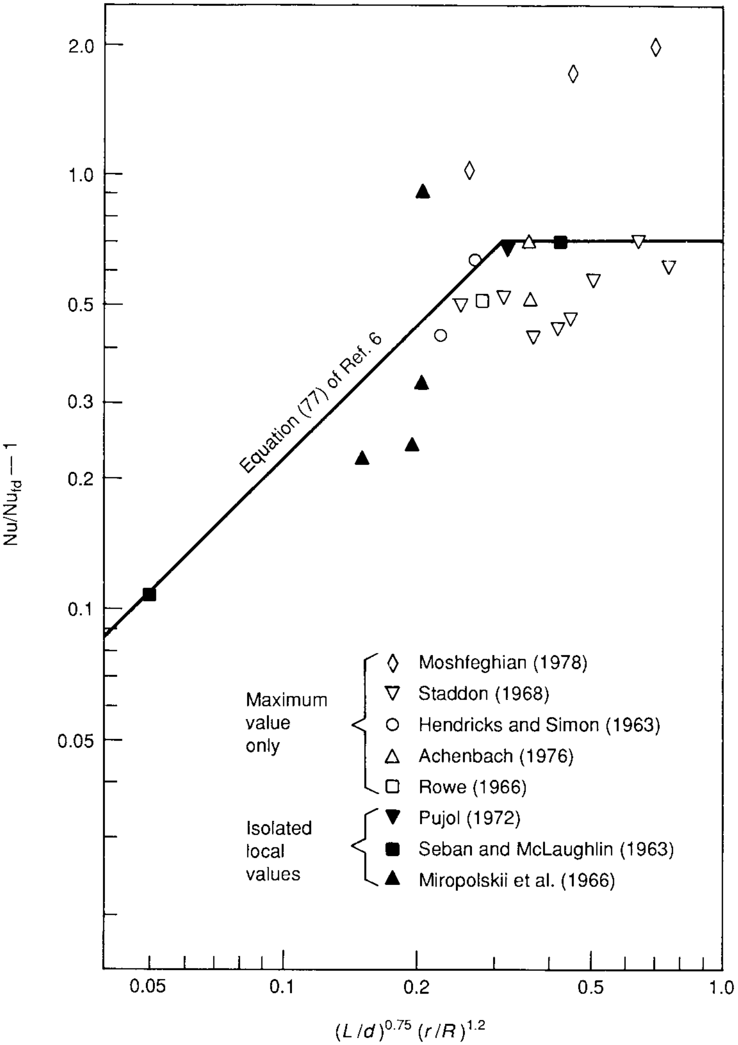

FIGURE C1.18 Comparison of Eq. (77) of Ref. 6 with the data of various authors on heat and mass transfer in bends.

0.5, 0.8 mm/year, respectively. How long would it take at the *nd* erosion rate to erode the pipe to one-half its original thickness?

$$\text{time} = \frac{\text{thickness}}{\text{erosion rate}} \tag{C1.29}$$

$$\text{time} = \frac{0.25\ \text{inches} \times 25.4\frac{\text{mm}}{\text{inches}}}{0.5\ \text{mm/year}} = 12.7\ \text{years}$$

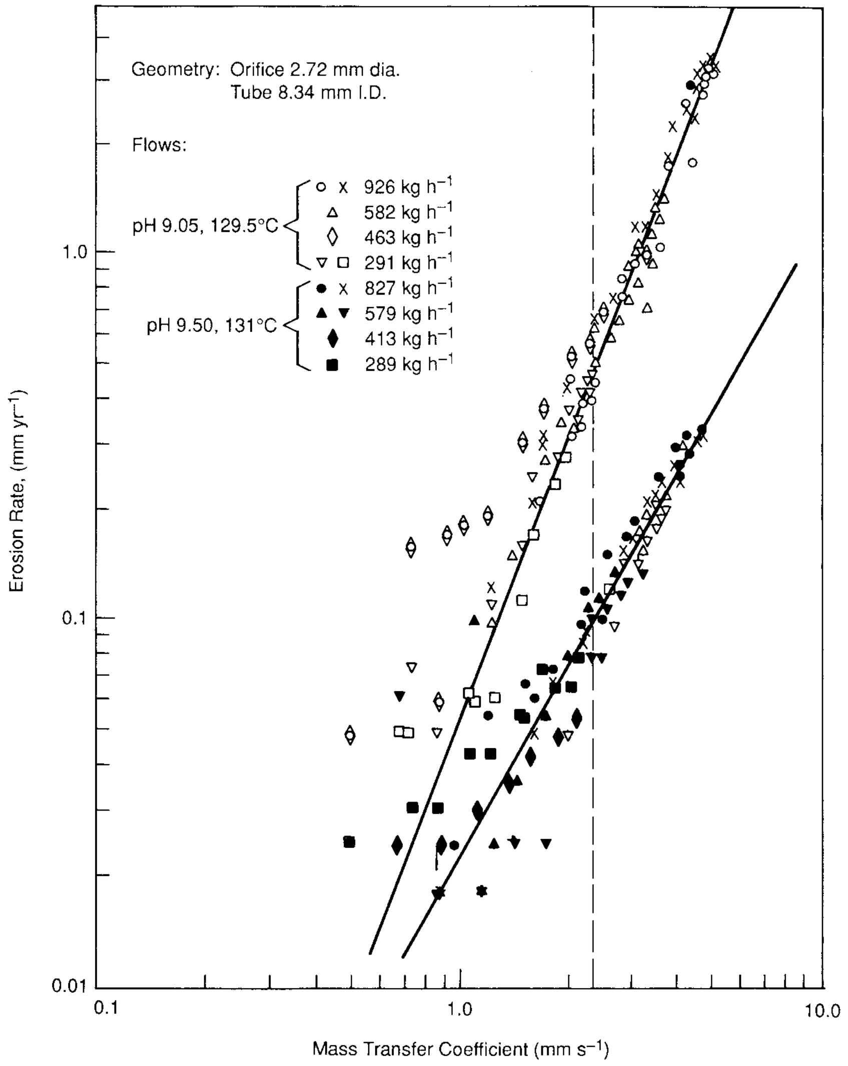

FIGURE C1.19 Mass transfer coefficient dependencies at different pHs. Correlations from loss profiles of specimens at four flow velocities.

At the low rate, the time to thin the wall to half the original thickness is about 15.9 years. At the high erosion rate it is about 7.9 years.

Start-Up, Operation, and Maintenance Considerations

Start-Up and Operation. Prior to start-up of water systems, the piping system should be cleaned as required. In some cases, chemical solvents are utilized, followed by flushing. Care should be taken that components not compatible with the chemical being used are removed during the cleaning and flushing process. Temporary strainers are sometimes included in the system for preoperational purposes. This practice protects pumps and valve-seating surfaces from large particles left in the pipe from the installation and testing periods. Temporary strainers are replaced by spool pieces when the system is ready for start-up. The strainers should be kept on hand and installed in the system during major work or repair to the system and replaced by the spool pieces after the system is certified to be clean. Potable water lines are disinfected prior to being put in service.

Prior to starting any system, the following precautions should be taken and included in plant procedures:

1. Verify that the system is free of debris, has been cleaned and flushed thoroughly, and that all testing and inspections are complete.
2. Verify that all components function as required. Rotate pumps by hand to ensure that impellers rotate freely, exercise valves several times, and if necessary, adjust packing.
3. Verify that all instrumentation is in place and root valves open.
4. Verify that the system piping and components are properly vented and drained. For high-pressure or high-temperature systems, ensure that vents and drains are routed away from personnel or sensitive equipment. Close the valves as evidence of complete venting and drainage occur.
5. Verify valve line up intended for start-up, especially the required positions of pump discharge valves and minimum-flow recirculation valves.
6. Monitor system initial operation for anomalies, such as surges, spikes, leaks, and control failures, and make necessary adjustments or shutdown the system and correct any problems.
7. Monitor system pressures, flow rates, and component response as a regular planned routine. Logs should be maintained to develop a baseline condition for comparison for all modes of operation.
8. System shutdown should generally be performed in reverse of the startup procedure. It is important, however, that specific instructions for the shutdown and securing of a system be included in operational procedures. In most cases drains should be left opened.
9. High-energy systems require extra precautionary measures such as tagging or locking valve positions and the active overrides to controls and interlocks.

Flow Balancing. The system through which water flows offers resistance to flow (as discussed) such as friction, static head, and back pressure. Flow rates in a system vary, depending on several factors, such as

1. Variations in static head
2. Valve alignment
3. System demands or loads
4. Flow control valve operation

All affect system resistance.

To design and operate a system, it would be ideal to assume steady-state operation. If steady-state operation is assumed and the system contains branch lines of flow, it is important for economy and system stability to proportion flow in accordance with the specific demands of each branch or service. This is achieved by flow balancing. On a theoretical basis this is done by plotting the system resistance curves for each branch for a given system flow. Since the total flow must equal the sum of all branch flows and the total pressure drop across each branch between junction points must be identical, the flow divides to produce these identical losses. The sum of the flow rates through each branch at a particular head provides the total flow rate for the system at that head. The total system flow required can be determined from load data, and resistance can be added to the branch lines by adjusting throttle-valve positions. In some cases orifices may be warranted.

This practice in the field can be tedious but may be made easier with the proper flow- and pressure-measuring instrumentation and favorable throttle-valve characteristics.

Maintenance. A major factor in developing a maintenance program is the accessibility of piping and components. Although accessibility should be designed into a system, it is not always practical; for example, in intake or municipal water systems, where most of the piping is buried. In cases such as this, it is cost effective to maintain piping upon failure. The designer should therefore be attentive about the design for buried pipe, including wall design to handle internal pressure and external loading, coating and linings to protect from corrosion, and other design elements. In considering accessibility of buried piping, the designer considers an alignment that will provide sufficient clearances from adjacent pipelines and structures to allow for possible future excavation and repair. Likewise, the designer may choose an alignment that avoids existing or future paved areas in order to minimize the expense of demolition or repair of the pavement and to minimize traffic disruption during initial construction as well as subsequently if pipeline maintenance is required. Generally, the buried portion of a system is limited to passive components. Piping and normally opened or closed valves not usually requiring normal maintenance fall in this category. Other active components such as pressure regulators, relief valves, pumps, large valves, and metering devices should be located in buildings, modules, or manholes and be readily accessible. For this latter category of components, a rigorous maintenance schedule should be developed.

Depending on the degree of importance for safety and operation of a system, an inspection program should be instituted. Inspection during operation is mostly visual; however, some systems may be fitted with taps or probes for on-line inspection.

Beyond inspection, there are components which must be maintained on a regular basis regardless of need. The components' manufacturer provides instruction manuals which recommend maintenance and spare parts for replacement. The station operator must also use judgment and operating experience in the development and implementation of maintenance procedures. Generally speaking, bolt tensions, gasket condition, and packing leakage can be monitored daily. Pressure and temperature monitoring can show evidence of component deterioration or malfunction. Problems such as clogged strainers, hung-up valves, and leaks or breaks can be determined by instrumentation readings when the problem is not normally visible. Instrument calibration for both system components and testing instruments should be more tightly controlled, although frequency varies. Inspection of coatings and painting on a scheduled basis will help to eliminate corrosion problems for exposed components.

Accordingly, a sufficient supply of spare parts should be on hand. The system can be surveyed to determine which parts should be ordered. Operating experience can also help predict the expected life of parts that wear.

Water sampling should be performed routinely. Depending on the service, it can determine the safety of the supply (if it is for human consumption) or prevent corrosive or abrasive attack on internal components of the system. Sampling procedures should be developed to locate sampling points and to facilitate storage or transportation to the testing laboratory. Procedures should also contain acceptance criteria for each system application and associated water-treatment solutions for unacceptable water quality.

Occasionally, water systems require flushing or mechanical cleaning. These operations remove bacteriological growth, silt deposits, and scale buildup on pipe walls. Again, strict procedures must be developed and adhered to in order to control work.

Installation and Testing. Designer's piping-arrangement drawings and isometrics, if provided, are the governing documents for installation of piping. Unless existing site conditions warrant otherwise, piping shall be installed in accordance with the piping-arrangement drawings.

Buried Piping. The trench for installation of buried piping shall be of sufficient width and depth to provide necessary bedding and cover, depending on traffic volume and depth of frost line, and to facilitate joining, tapping, and future maintenance considerations. Pipe should be laid flat on the bedding and not supported on the end by the bell.

The trench should be filled in accordance with the specified requirements for fill material, rock size, and compaction. When specified, an insulating type of initial fill may be used. As indicated previously, configuration of trench and type and compaction of bedding and backfill can have a large impact on pipe adequacy to handle external loads. Generally, in the municipal waterworks industry, ductile-iron pipe is installed in accordance with AWWA C600, PVC in accordance with AWWA C905, prestressed concrete pipe in accordance with AWWA Manual M9, and steel pipe with AWWA Manual M11.

Aboveground Piping. For support of aboveground piping, there are two generally accepted procedures. One is to temporarily support the piping during fit-up and then to install the supports. The second procedure is to install the pipe support, then the piping. In either case, location tolerances should be provided and adhered to during design so as not to invalidate stress-analysis calculations. Cold springing of pipe should also be avoided but, if required, kept within tolerances.

Prior to being placed in service, pipelines are generally tested for a specified time period at pressures that include operating and possibly surge-allowance pressures.

REFERENCES

1. *AWWA Principles and Practices of Water Supply Operations*, Vol. 3—"Introduction to Water Distribution."
2. *Hydraulic Institute Engineering Data Book*, 2d ed., 1990, Hydraulic Institute.
3. Harvel Plastics, Inc. Products Bulletin 112/401, Effective 7/1/87, Revised 1/1/89, Havel Plastics, Inc.
4. Larson and Buswell, *Journal of the American Water Works Association*, Vol. 28, 1931, pp. 1500.
5. *EPRI Final Report—Single Phase Erosion-Corrosion of Carbon Steel Piping*, Feb. 19, 1987.
6. M.W.E. Coney, "Erosion-Corrosion: The Calculation of Mass-transfer Coefficients," Central Electricity Generating Board, May 1981, RD/L/N 197/80, Job No. VE 280.
7. M.W.E. Coney, S.J. Wilkin, and H.S. Oates, "Thermal-hydraulic Effects on Mass-transfer Behaviour and on Erosion-Corrosion Metal Loss Rates," Jan. 1983, Central Electricity Generating Board, TPRD/L/2349/N82.

8. F.P. Berger and K.-F F-L Hau, ‘‘Mass Transfer in Turbulent Pipe Flow Measured by the Electrochemical Method,’’ 1977, Int. J. Heat Mass-Transfer, 20:1185–1194.
9. Ductile Iron Pipe Research Association, TL/8-96/2M, Truck Loads on Pipe Buried at Shallow Depths.
10. Ductile Iron Pipe Research Association, DIPRA/8–96/5M, Design of Ductile Iron Pipe.
11. Ductile Iron Pipe Research Association, Thrust Restraint Design for Ductile Iron Pipe, 3d ed., 1992.

CHAPTER C2

FIRE PROTECTION SYSTEMS PIPING

Russell P. Fleming, P.E.
Vice President of Engineering
National Fire Sprinkler Association, Inc.
Patterson, New York

Daniel L. Arnold
Engineering Manager
Rolf Jensen & Associates, Inc.
Atlanta, Georgia

INTRODUCTION

General

Fire protection systems are unique in that the majority of their service life is spent in a static, no-flow condition. However, when required to operate in an emergency, fire protection systems can be critically important to the safety of building occupants, the protection of property, and the continued operation of a facility. For these reasons, the piping associated with fire protection systems must be designed to minimize service interruptions and be capable of operating reliably over an extended period of time.

To ensure that fire protection systems are reliable, building and insurance authorities require that they be constructed in accordance with nationally recognized standards. Federal regulations or locally adopted requirements may also be applicable.

Fire protection piping, as treated in this chapter, deals with the network of distribution piping that delivers fire extinguishing agents. This chapter presents general information on piping materials, available references, and design considerations for both aboveground system piping and underground water supply piping.

Types of Fire Suppression Systems

There are numerous types of fire suppression systems. All of them use piping or tubing to convey fire suppression agents to a protected area or to a specific fire hazard. The type of fire suppression system selected for a particular building or location depends on the nature of the fire hazard, the value of the building and contents, applicable code and regulatory requirements, and physical considerations such as environment and aesthetics. The common fire suppression systems are described in the following subsections.

Automatic Sprinkler Systems. An automatic sprinkler system, for fire protection purposes, is a network of piping to which automatic sprinklers or open sprinklers are attached. The system is connected to an automatic water supply. The piping network and connected sprinklers are distributed throughout the protected area in accordance with fire protection engineering standards.

Automatic sprinkler systems may be wet pipe, dry pipe, preaction, or deluge type (each discussed independently in the following paragraphs) depending upon the conditions by which water is admitted into the piping for distribution out of the sprinklers. With the exception of the deluge-type system, which uses open sprinklers, all automatic sprinkler systems use automatic sprinklers.

Automatic sprinklers are sealed by a heat-responsive element such as a eutectic solder link or a frangible glass bulb. When the heat-responsive element of an automatic sprinkler reaches its predetermined operating temperature during a fire, the individual sprinkler opens, discharging water to control the fire.

System operation is generally stopped manually by closing the system control valve. Control valves should be kept in the open position until the fire is completely extinguished and should be constantly manned during postfire overhaul operations in case the fire rekindles.

The *wet pipe* system is the most basic and common type of automatic sprinkler system. See Fig. C2.1. It is the most economical system as well as the most reliable one due to its simplicity. In the wet pipe system, the system piping is constantly charged with water under pressure. In addition to the *main control valve*, the system may also have *sectional control valves*. The system is also required to include at least a local water flow alarm. It is now common to use central station signaling systems to monitor water flow in the system; to supervise the open position of system control valves; and to supervise the ready condition of water supply elements such as pumps, pressure tanks, and gravity tanks.

The *water flow alarm* device for any automatic sprinkler system is located in the main supply pipe of the system, generally a vertical section of main termed the *system riser*. For a wet pipe system the alarm device is usually either an alarm check valve or a paddle-type water flow switch. An *alarm check valve* (see Fig. C2.2) is a valve with a free-swinging, hinged clapper that opens when water flows through the system and automatically reseats when the flow stops. Moving the clapper from its seat, as in a system flow condition, opens ports that permit water to flow to mechanical water gongs or electric pressure switches. In a *water flow switch,* (Fig. C2.3) the paddle in the water piping lies motionless until water flows through the system. Movement of the paddle by water flow closes contacts used to initiate electrical alarms.

Automatic wet pipe sprinkler systems are provided for general fire suppression throughout an area where fixed suppression is required and where there are no special considerations that restrict their use.

Dry pipe automatic sprinkler systems are used primarily in unheated occupancies and structures. See Fig. C2.4. In a dry pipe system, a *dry pipe valve* is located in the main supply header or system riser. All piping downstream of the dry pipe valve is charged with air or nitrogen to hold the clapper of the dry pipe valve closed. The dry valve is configured to give a mechanical advantage to the downstream pressure, such that 30 to 40 psi (200 to 300 kPa) air or nitrogen pressure can hold back up to 175 psi (1200 kPa) water pressure. When a sprinkler opens, the air or nitrogen is released, tripping the dry pipe valve and introducing water to the system piping. See Fig. C2.5.

Deluge systems are used to provide fire protection specifically for high-hazard equipment or areas such as transformer areas and ammunition magazines. A deluge

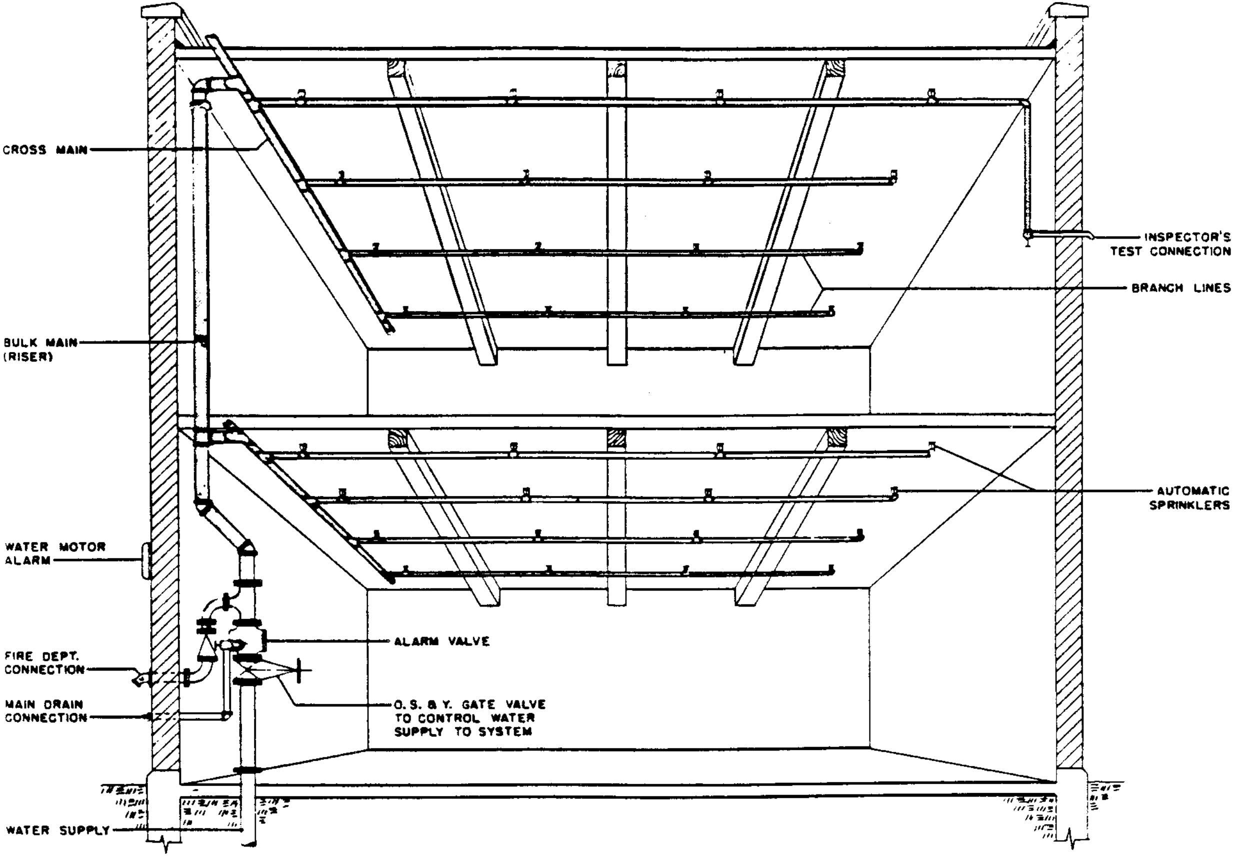
CROSS MAIN
INSPECTOR'S TEST CONNECTION
BRANCH LINES
BULK MAIN (RISER)
AUTOMATIC SPRINKLERS
WATER MOTOR ALARM
ALARM VALVE
FIRE DEPT. CONNECTION
MAIN DRAIN CONNECTION
O. S. & Y. GATE VALVE TO CONTROL WATER SUPPLY TO SYSTEM
WATER SUPPLY

FIGURE C2.1 Typical wet pipe system.

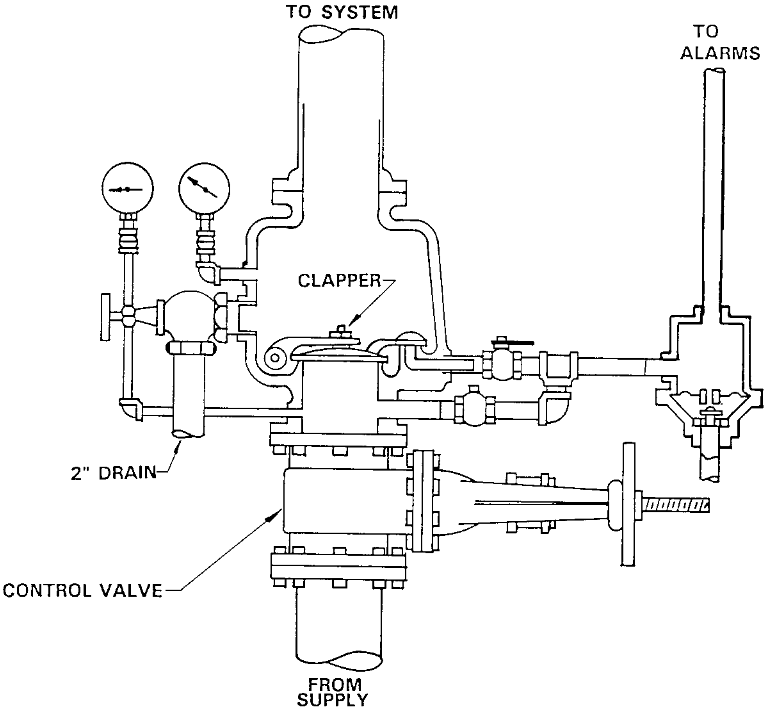

FIGURE C2.2 Typical wet pipe system alarm check valve.

valve, as described for the preaction system, is provided in the main supply header or system riser. See Fig. C2.6. A *deluge valve* is a normally closed, automatic control valve located in the system riser that prevents water from entering the system piping until required. Operation of the deluge valve is achieved by an electric, hydraulic, or pneumatic signal initiated by a separate detection system located within the protected space. The detection system can employ fixed temperature or rate-of-rise heat detectors, smoke detectors, infrared or ultraviolet detectors, or separate "pilot line" sprinklers. The deluge valve must also be arranged to be operated manually. Open sprinklers or spray nozzles are mounted to the piping network of deluge systems in lieu of sealed automatic sprinklers. When the deluge valve is opened upon activation of the separate detection system, water simultaneously flows from all sprinklers or spray nozzles on the system.

Preaction sprinkler systems are provided for fixed fire suppression where it is particularly important to prevent the accidental discharge of water into an area. The piping network of a preaction sprinkler system is maintained dry until water is needed for fire suppression. Automatic sprinklers are installed on the piping network. See Fig. C2.7.

A deluge valve is provided for each preaction system. The preaction system is generally required to be charged with a low supervisory air pressure.

Preaction systems can be configured in various ways. The traditional preaction system, in which water enters the piping based only upon the activation of the

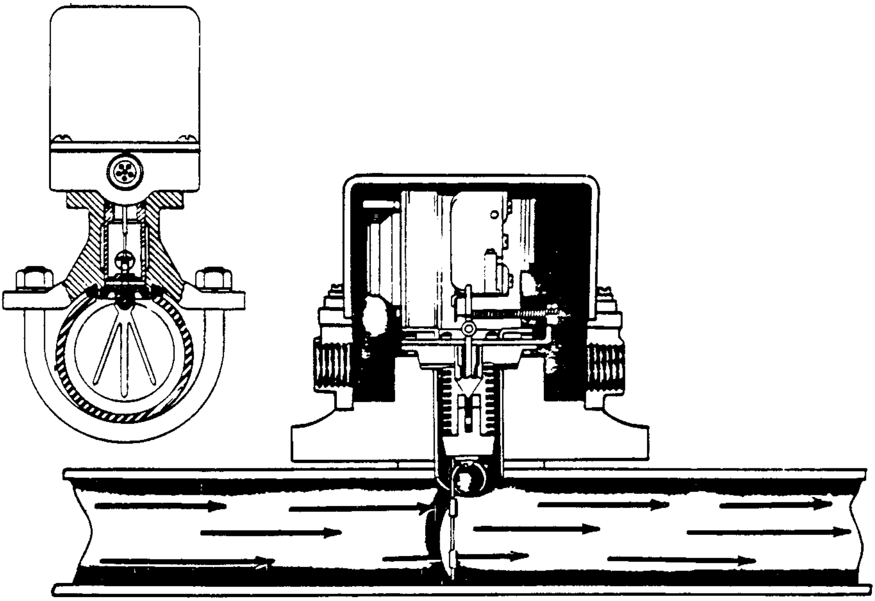

FIGURE C2.3 Water flow detector/switch.

detection system, is now termed a *single-interlock* preaction system. A *noninterlocking* preaction system is one configured such that either the activation of the detection system or the operation of an automatic sprinkler permits water to flow into the system piping. A *double-interlock* preaction system, intended for use in freezers and other locations where water trapped in the piping would cause damage, requires both the activation of the detection system and the operation of one or more automatic sprinklers in order to release water into the system piping.

Gaseous Fire Suppression Systems. Gaseous fire suppression systems are provided in areas where water is not the extinguishing agent of choice, such as for specialized electronic equipment rooms or water-sensitive storage areas. Nevertheless, it is often recommended that gaseous fire suppression systems be supplemented with an automatic sprinkler system protecting the same area due to the high reliability of the latter.

Gaseous fire suppression systems formerly included *halogenated gas* (Halon) suppression systems, but these have been largely eliminated by international agreement due to their ozone-depleting properties. New alternative "clean agents" have joined carbon dioxide as acceptable gaseous fire suppression system agents. These extinguishing agents are generally stored in pressurized cylinders or tanks. The number of cylinders and quantity of extinguishing agent required for a particular area is dependent on the volume of the protected space, the design concentration demonstrated to achieve fire control or extinguishment, and the physical arrangement of system piping and nozzles.

Automatic activation of these systems is initiated by an electrical signal from a

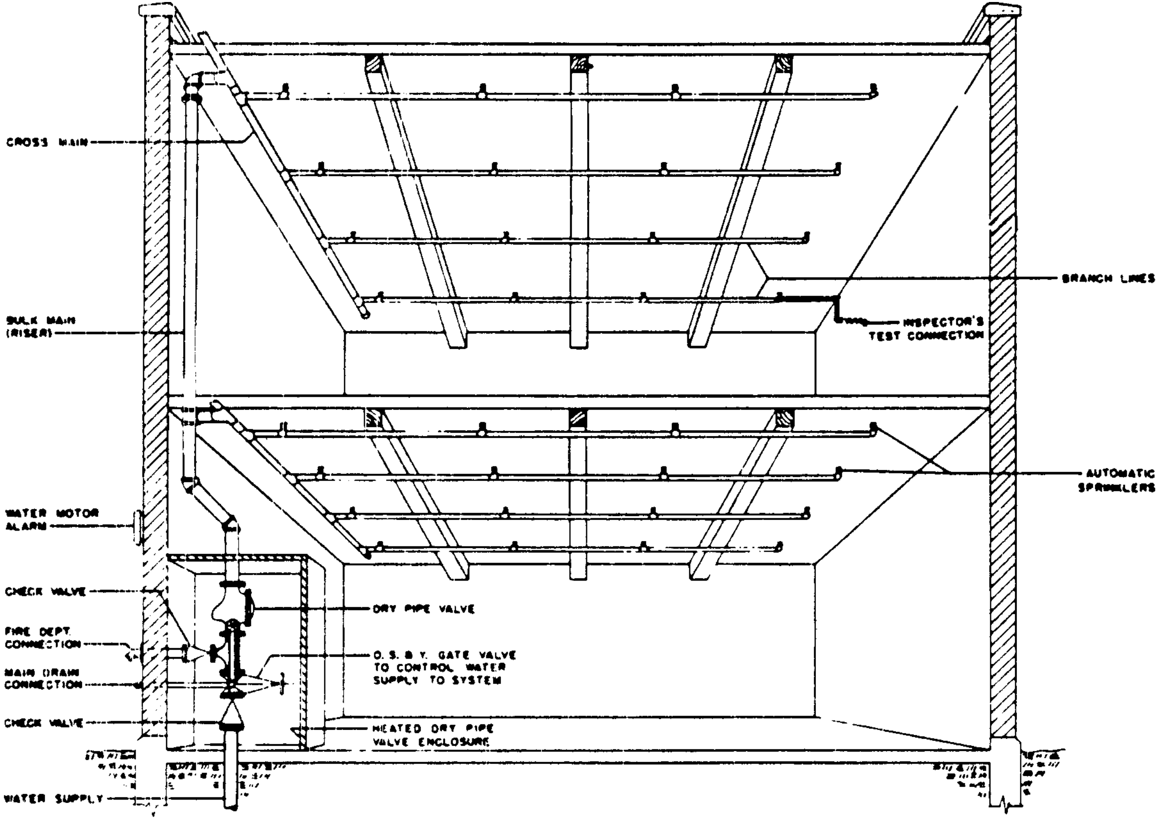
CROSS MAIN
BULK MAIN (RISER)
WATER MOTOR ALARM
CHECK VALVE
FIRE DEPT. CONNECTION
MAIN DRAIN CONNECTION
CHECK VALVE
WATER SUPPLY
BRANCH LINES
INSPECTOR'S TEST CONNECTION
AUTOMATIC SPRINKLERS
DRY PIPE VALVE
O. S. & Y. GATE VALVE TO CONTROL WATER SUPPLY TO SYSTEM
HEATED DRY PIPE VALVE ENCLOSURE

FIGURE C2.4 Typical dry pipe system.

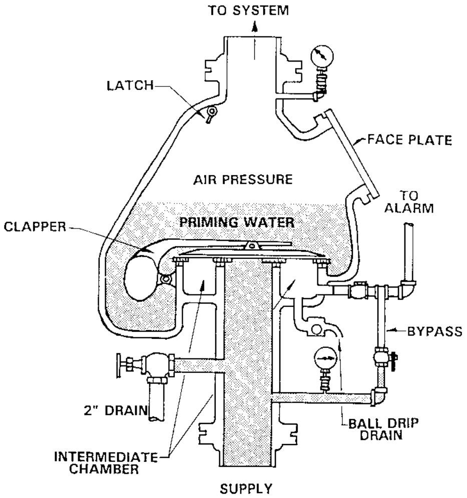
TO SYSTEM
LATCH
FACE PLATE
AIR PRESSURE
TO ALARM
CLAPPER
PRIMING WATER
BYPASS
2" DRAIN
BALL DRIP DRAIN
INTERMEDIATE CHAMBER
SUPPLY

FIGURE C2.5 Schematic dry pipe valve diagram.

separate detection system installed in the protected space. When the detection system senses the fire condition, the extinguishing agent is released into the protected space. Manual means for discharging the systems are also provided. Discharge of gases that would create a hazard to life safety must be accompanied by warning systems within and around the protected area.

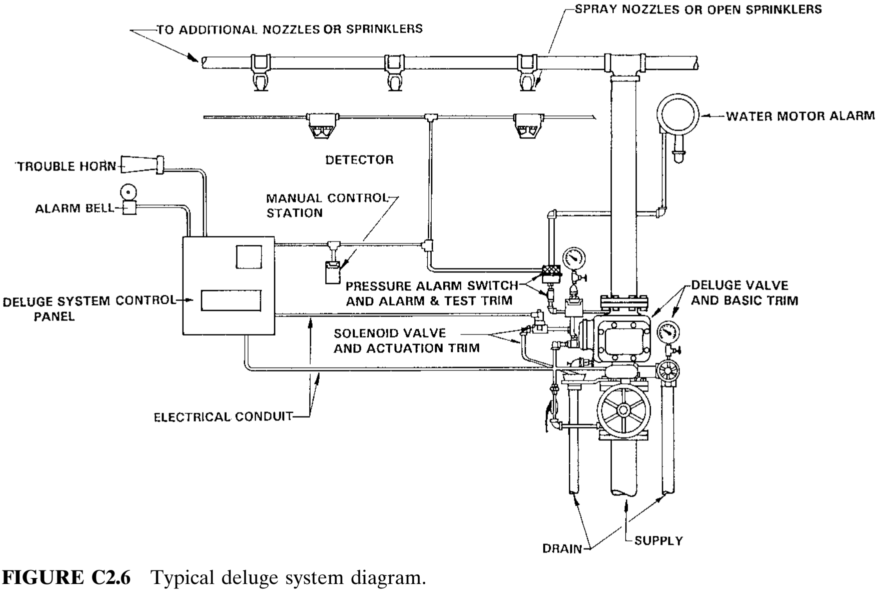
SPRAY NOZZLES OR OPEN SPRINKLERS
TO ADDITIONAL NOZZLES OR SPRINKLERS
WATER MOTOR ALARM
DETECTOR
TROUBLE HORN
ALARM BELL
MANUAL CONTROL STATION
PRESSURE ALARM SWITCH AND ALARM & TEST TRIM
DELUGE VALVE AND BASIC TRIM
DELUGE SYSTEM CONTROL PANEL
SOLENOID VALVE AND ACTUATION TRIM
ELECTRICAL CONDUIT
DRAIN
SUPPLY

FIGURE C2.6 Typical deluge system diagram.

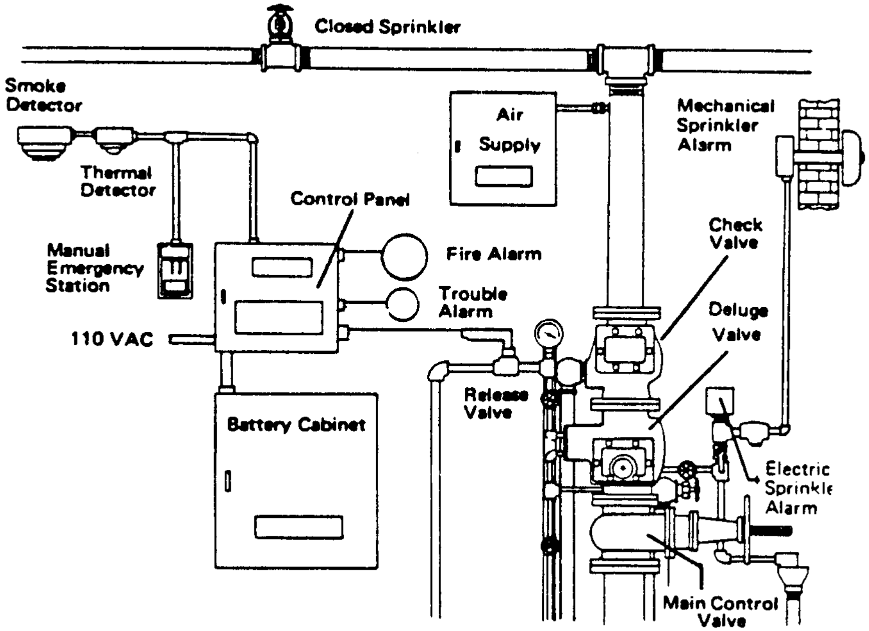
Closed Sprinkler
Smoke Detector
Thermal Detector
Manual Emergency Station
110 VAC
Control Panel
Air Supply
Fire Alarm
Trouble Alarm
Battery Cabinet
Release Valve
Mechanical Sprinkler Alarm
Check Valve
Deluge Valve
Electric Sprinkle Alarm
Main Control Valve

FIGURE C2.7 Typical preaction sprinkler system diagram.

To be effective, the extinguishing agent must be maintained in the protected area at design concentrations for a sufficient length of time, often 10 minutes or more. To maintain the concentration level, the protected space should have boundary penetrations appropriately sealed to prevent leakage of the agent.

Foam Fire Suppression Systems. Foam fire suppression systems are used primarily to protect hazards or areas having flammable liquid fire hazards. The fire extinguishing foam is made by mixing foam concentrate and water within the piping network. The foam extinguishes fire by smothering the fire, suppressing flammable vapor production, and cooling the fuel in adjacent areas.

The specifications for piping material that carries foam concentrate and solution must be closely coordinated with the recommendations of the foam manufacturer. Often stainless steel piping is recommended. Selecting an inappropriate piping material may increase maintenance needs on the system and decrease the piping's usable service life.

Foam can also be added to automatic sprinkler systems to improve performance, especially for fires involving flammable liquids.

Chemical Extinguishing Systems. Dry and wet chemical extinguishing systems are generally *preengineered* systems, meaning that flow rates, nozzle pressures, and quantities of agent are predetermined for the geometries of specific hazards.

Historically, the most common application for these systems has been for restaurant, commercial, and institutional hoods, plenums, and ducts, mainly those associated with cooking appliances. *Dry chemical* systems employ a powder composed of very small particles, usually with a base of either sodium bicarbonate, potassium bicarbonate, or ammonium phosphate. *Wet chemical* systems employ a solution of water and either potassium carbonate-based or potassium acetate-based chemicals.

Water Mist Systems. Water mist systems were developed in part to substitute for the use of Halon, and in part as an alternative to the use of automatic sprinkler systems where water supply must be kept to a minimum due to limitations on either weight or volume. Water mist systems are distinguished from automatic sprinkler systems by their smaller droplet sizes, which tend to be more effective in cooling but less effective in penetrating upward fire plumes. Some water mist systems are configured much like automatic sprinkler systems, utilizing small orifices to produce the small droplet diameters. Others utilize pressures in excess of 1500 psi (10 MPa) to produce the water mist. Still others employ twin fluid nozzles, using air or nitrogen under pressure to break a water stream up into a fine mist.

Standpipe Systems. A standpipe system consists of a network of piping that supplies water for manual fire suppression throughout a building or facility. The network is supplied by a fire protection water supply system and it distributes water to normally closed standpipe valve outlets or hose stations.

Standpipe systems often serve as the source of water supply to automatic fire sprinkler systems, particularly in high-rise buildings. In such cases, sprinkler systems on each floor are fed from the vertical standpipe riser through floor control valves. Each floor is provided with a water flow switch and a combination test/drain valve, connected to a separate drain riser. This enables the alarms from the flow switches on each floor to be tested.

Hydrant Systems and Water Supplies. Hydrant systems are generally used in conjunction with private fire service mains, which also serve to distribute water from the source of supply to most water-based fire protection systems. In many cases the source of supply is the public water main as maintained by the public water works company. In other instances, such as in a large industrial plant, the water supply system may be privately owned and operated. Regardless of ownership, the design of the water supply to fire protection systems is a critical factor in assuring reliable fire protection.

A fire protection water supply system may consist of storage tanks, pumps, underground and aboveground piping, and associated control and isolation valves. Underground valves are normally of the post indicating type.

The capacity and pressure required of a particular water supply system is generally related to the design demands of the water-based fire suppression system in conjunction with the normal water consumption for a facility. Additionally, local authorities and insurance organizations often prescribe fire flow requirements for individual properties.

REFERENCE DOCUMENTS

Codes and Standards

As a rule, building and fire codes do not specifically address fire protection system piping, but instead reference system installation standards. The generally recognized standards that address fire protection systems piping are those developed by the National Fire Protection Association (NFPA). Federal regulations may reference applicable NFPA standards, but often include special requirements for unique fire protection systems such as those protecting marine, military, or nuclear facilities. Local, municipal, or state regulations may also be applicable.

Some insurance organizations publish their own standards or supplements to the NFPA standards that may be applicable to a particular project.

Some generally recognized standards that relate to fire protection piping systems are listed in Table C2.1. Table C2.2 contains additional standards referenced with regard to materials, joining and installation methods.

There are additional NFPA codes, standards, and recommended practices and guides which may contain specific design criteria for particular hazards or facilities. A complete listing of available documents developed by NFPA technical committees is available by contacting the National Fire Protection Association, Batterymarch Park, P.O. Box 9101, Quincy, MA 02269–9101.

Fire protection standards often require specific equipment or materials to be ''listed.'' The term *listed* means that the equipment or material has been evaluated by a recognized product evaluation organization and has been found to meet appropriate standards or has been tested and evaluated for use in a particular fire protection application. Recognized organizations concerned with product evaluation publish lists of evaluated and approved, i.e., listed products. Additionally, the listing organization performs periodic follow-up inspections of the production of listed

TABLE C2.1 National Fire Protection Association (NFPA) System Standards

NFPA standard no.	Title
NFPA 13	Standard for the Installation of Sprinklers
NFPA 13D	Standard for the Installation of Sprinkler Systems in One- and Two-Family Dwellings and Mobile Homes
NFPA 13R	Standard for the Installation of Sprinkler Systems in Residential Occupancies Up to Four Stories in Height
NFPA 14	Standard for the Installation of Standpipe and Hose Systems
NFPA 20	Standard for the Installation of Centrifugal Fire Pumps
NFPA 22	Standard for the Installation of Water Tanks for Private Fire Protection
NFPA 24	Standard for Private Fire Service Mains and Their Appurtenances
NFPA 11	Standard for Low-Expansion Foam
NFPA 11A	Standard for Medium- and High-Expansion Foam Systems
NFPA 15	Standard for Water Spray Fixed Systems
NFPA 16	Standard for Deluge Foam-Water Sprinkler and Spray Systems
NFPA 16A	Standard for the Installation of Closed-Head Foam-Water Sprinkler Systems
NFPA 231	Standard for General Storage
NFPA 231C	Standard for Sprinkler Protection for Rack Storage of Materials
NFPA 12	Standard on Carbon Dioxide Extinguishing Systems
NFPA 12A	Standard on Halon 1301 Fire Extinguishing Systems
NFPA 17	Standard for Dry Chemical Extinguishing Systems
NFPA 17A	Standard on Wet Chemical Extinguishing Systems
NFPA 750	Standard on Water Mist Fire Protection Systems
NFPA 1963	Screw Threads and Gaskets for Fire Hose Connections
NFPA 2001	Standard on Clean Agent Fire Extinguishing Systems

TABLE C2.2 Additional Standards for Fire Protection Piping

ASME B36.10M	Welded and Seamless Wrought Steel Pipe
ASME B36.19M	Stainless Steel Pipe
ASME B1.20.1	Pipe Threads, General Purpose
ASME B16.18	Cast Copper Alloy Solder Joint Pressure Fittings
ASME B16.22	Wrought Copper and Copper Alloy Solder Joint Pressure Fittings
ANSI/AWWA A21.50/C150	Thickness Design of Ductile-Iron Pipe
ANSI/AWWA A21.51/C151	Ductile-Iron Pipe, Centrifugally Cast, for Water or Other Liquids
ASME B31.1	Power Piping Code
ASME B31.3	Process Piping Code
ASTM A795	Black and Hot-Dipped Zinc Coated (Galvanized) Welded and Seamless Steel Pipe for Fire Protection Service
ASTM A53	Welded and Seamless Steel Pipe
ASTM A135	Electric Resistance Welded Steel Pipe
ASTM A268	Seamless and Ferretic Stainless Steel Tubing for General Service
ASTM A269	Seamless and Welded Austenitic Stainless Steel Tubing for General Service
ASTM A632	Seamless and Welded Austenitic Stainless Steel Tubing (Small Diameter) for General Service
ASTM A778	Welded Unannealed Austenitic Stainless Steel Tubular Products
ASTM A789/A789M	Seamless and Welded Ferritic/Austenitic Stainless Steel Tubing for General Service
AWWA C203	Standard for Coal-Tar Protective Coatings and for Steel Water Pipelines—Enamel and Tape—Hot Applied
AWWA C205	Standard for Cement/Mortar Protective Lining and Coating for Steel Water Pipe [4 in (100 mm) and Larger]—Shop-Applied
NFPA 51B	Standard for Fire Prevention in Use of Cutting and Welding Processes

equipment and material. It is important that all fire protection piping products be used in applications consistent with their listing.

For fire suppression system equipment, two product evaluation organizations in the United States are generally recognized by authorities having jurisdiction as providing appropriate listing services: Underwriters Laboratories, Inc. (UL) and Factory Mutual Research Corporation (FM).

Other Reference Documents

Other references related to the design of fire protection piping systems include the following:

- NFPA Fire Protection Handbook, National Fire Protection Association
- Fire Protection Equipment List, Underwriters Laboratories, Inc.
- Factory Mutual System Approval Guide, A Guide to Equipment, Materials and Services Approved by Factory Mutual Research for Property Conservation

- Automatic Sprinkler Systems Handbook, National Fire Protection Association
- The SFPE Handbook for Fire Protection Engineering, Society of Fire Protection Engineers
- AWWA Handbooks, Manuals and Standards, American Water Works Association
- Federal Regulations, Standards and Specifications
- State and Local Codes and Standards
- Insurance Organization Standards and Manuals

Federal agencies and departments that regulate fire-protection-related matters reference NFPA standards extensively. However, specific federal regulations may be issued. When issued for enforcement, these federal regulations are published in the Code of Federal Regulations, available from the General Services Administration. Departments of the U.S. Government that issue regulations related to fire protection include the General Services Administration; the departments of Defense, Energy, Labor, Veterans Affairs, and Housing and Urban Development; and the U.S. Coast Guard and branches of the military.

Several insurance organizations publish standards to be used in the evaluation of property insurance risks and to provide fire protection guidance to their insureds. Such organizations include the Factory Mutual Research Corporation (FMRC), Industrial Risk Insurers (IRI), and Kemper Insurance. The Insurance Services Office (ISO) relies exclusively on the use of NFPA standards. Other insurance associations that exist for special underwriting risks such as the nuclear, marine, textile, and food industries sometimes have their own guidelines and special requirements.

Most standards related to fire protection piping have been developed based on the needs and experience of a particular region or industry. In North America, these standards are generally based on NFPA codes and standards. With the increasing global community and economy, awareness of standards from other countries and communities is becoming imperative. Examples include DIN (German Standards Institute), AFNOR (French Standards Association), and BSI (British Standards Institute). It should be recognized that many European standards are currently being harmonized as CE (European Community) standards.

DESIGN CONSIDERATIONS

To ensure that all necessary aspects that could impact fire protection piping systems are considered, design goals should be established based on present and projected system needs and conditions. These design goals must consider expected fire suppression system demands, building locations, economic constraints, reliability, water supply source availability, design pressures, and environmental conditions.

Design Conditions

Working Pressure. The maximum working pressure of a particular installation must be considered when selecting the type and class of pipe to be used. To determine the maximum working pressure for water systems, designers should consider fire pump shut-off head, elevation changes, and the expected range of source pressures.

Pipe in underground fire service mains is generally expected to withstand a working pressure of not less than 150 psi (1.0 MPa). System components are listed accordingly.

Pipe in overhead fire protection systems such as sprinkler systems and standpipe systems is generally listed for a minimum working pressure of 175 psi (1.2 MPa). This matches the usual minimum working pressure of system components such as automatic sprinklers, water flow switches, alarm valves, and dry valves. However, some components are listed for higher working pressures. When working pressures exceeding 175 psi (1.2 MPa) are expected, all valves, fittings, and pipe should be rated for the appropriate pressure. Several types of pipe specifically listed for fire protection service are listed for a working pressure of 300 psi (2.0 MPa).

Because sprinkler system components are generally intended for use up to 175 psi (1.2 MPa), higher pressures should be avoided. However, in design situations such as high-rise buildings and large multibuilding complexes, higher pressures may be necessary. When these situations occur, sprinkler system components should be protected from excessive pressures. This is accomplished by utilizing approved pressure-reducing valves.

Pressure-reducing valves are intended to protect components from both high static (nonflowing) and flowing pressures. A pressure relief valve that simply drains away flow to relieve pressure is not a pressure-reducing valve, nor is a restricting orifice that simply reduces flowing pressures. A *pressure control valve* is a pilot-operated pressure-reducing valve that can be used to reduce the downstream water pressure to a maximum specific value under both static and flowing water conditions. The setting of the valve must be carefully controlled and its operability regularly maintained to assure that sufficient pressure is available to properly operate the fire protection systems.

When evaluating the impact of fire pump operating pressures on the maximum working pressure conditions, the total discharge pressure at pump shut-off should be considered. Centrifugal fire pumps, the types of pumps used in most water-based fire protection systems, are permitted to have a shut-off or churn pressure of up to 140 percent of rated pressure.

The minimum operating pressure at the discharge point of sprinklers or spray nozzles must be maintained to assure proper discharge flow and water spray distribution. Operating below these minimums can prevent a system from controlling or suppressing a fire.

NFPA 13 requires a minimum discharge operating pressure of 7 psi (48 kPa) for any sprinkler. Higher minimums are required for devices with special applications or nonstandard coverage areas and flows, such as extended-coverage sprinklers. The minimum pressure required for such specific application sprinklers can be unique to manufacturer, model, and intended application. These higher minimums are part of the sprinkler's listing and are described in the manufacturer's product literature that is approved at the time of the product listing.

The working pressures for gaseous suppression systems and water mist can be substantially higher than those normally found in most water-based fire protection water systems. Storage cylinders with pressures of 600 to 850 psi (4 to 6 MPa) are typical for gaseous systems, and pressures in excess of 1500 psi (10 MPa) are encountered with some types of water mist systems. These pressures result in substantial thrust forces and piping stresses that are critical factors in the design of these fire suppression piping systems.

Sources of Water Supply. Water for fire protection purposes can be obtained from public water systems, storage tanks, and raw water sources such as rivers, lakes, and reservoirs. The source must be reliable and of sufficient flow and capacity to operate the connected fire protection systems.

The required flow capacity and residual pressure for a particular building is dependent on automatic sprinkler system demand, hose stream demand for interior fire fighting purposes, and exterior hose stream demand from fire hydrants. The required flow capacity at minimum residual pressure is often referred to as the *system demand*. For a sprinkler system, system demand is the minimum water supply required to operate the number of sprinklers contemplated to open from a particular fire hazard, plus an allowance for manual hose stream operations. NFPA 13 covers water supply requirements for most automatic sprinkler systems.

NFPA 14 provides requirements for the water supply necessary for various classes of standpipe systems. For fully sprinklered buildings, the water supply for sprinklers need not be added to the standpipe system demand required by NFPA 14. This is in recognition of the reduced likelihood of a large uncontrolled fire in a fully sprinklered building. For partially sprinklered buildings, the sum of the sprinkler system demand and standpipe system demand must be supplied by the water source.

Water demand requirements for a particular building in excess of minimum standards may be set forth by the loss-prevention department of the property's insurance carrier.

When raw water is the supply source for automatic sprinkler systems, special provisions are required to reduce the accumulation of sediment in piping drop nipples. Return bends are required to prevent the accumulation of sediments in drop nipples that might eventually plug sprinklers, obstructing the flow of water (see Fig. C2.8).

All sprinkler system cross mains must be arranged for flushing with easily removable fittings. Internal inspections of fire protection piping systems should be conducted whenever any of the following conditions are observed:

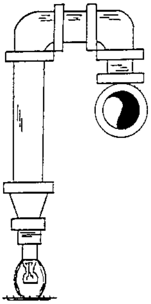

FIGURE C2.8 Typical return bend arrangement.

- Defective intake screens for fire pumps taking suction from open bodies of water
- Discharge of obstructive material during system tests
- Foreign material in fire pumps or system valves
- Plugged sprinklers, nozzles, or piping during system alterations
- Failure to flush yard piping or surrounding public mains at time of new installation or repairs
- Record of broken public mains in the vicinity
- Abnormally frequent false tripping of dry pipe valve(s)
- System returned to service after shutdown exceeding a year
- Reason to suspect sodium silicate or highly corrosive fluxes were used within system piping

Freezing Temperatures. Fire protection piping systems must be protected from freezing when temperatures cannot be constantly maintained above 40°F (4°C). For underground mains, burying pipes below the frost line is the usual method to protect against freezing. The depth of cover for underground water mains to avoid freezing in different regions of the United States and Canada is shown in Fig. C2.9.

In fire protection system piping, there may be no circulation of water through the piping such as exists in a public waterworks system. As such, depth of bury is usually deeper than with other piping systems. Exposed short sections of pipe should be boxed or wrapped and heated, since the use of exterior insulation only on exposed pipes is likely to be ineffective for prolonged exposure to freezing condition.

Aboveground fire protection systems must also be protected from low temperatures. Where required, this is usually accomplished by providing special suppression systems such as a dry pipe sprinkler system. For dry pipe systems, the dry pipe valve must be located within a heated enclosure. Attempts to use heat tape to protect dry valve bodies against freezing can result in damage to internal gaskets and seals.

For residential sprinkler systems, where the pipe is separated from the heated area by no more than a sheet of gypsum board, R-19 insulation carefully installed between the system piping and the exterior walls and roof is considered capable of protecting the pipe from exterior temperatures as low as −40°F (−40°C). This assumes that the building interior is maintained at a minimum 50°F (10°C) temperature. Insulation should never be used between the sprinkler system piping and the heated space.

Corrosive Environments. Corrosive conditions, both in soil and in air, require special precautions for fire protection system piping, fittings, and hangers. The

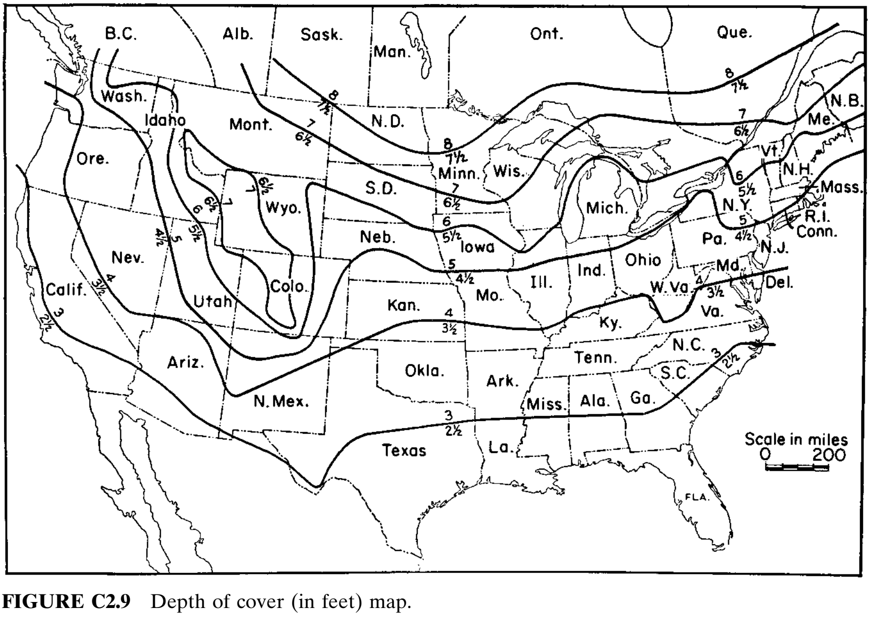
B.C.
Alb.
Sask.
Man.
Ont.
Que.
Wash.
Idaho
Mont.
N.D.
Minn.
Wis.
Mich.
N.Y.
Vt.
N.H.
Me.
N.B.
Mass.
R.I.
Conn.
N.J.
Pa.
Md.
Del.
Ore.
S.D.
Wyo.
Neb.
Iowa
Ohio
Ind.
Ill.
W.Va.
Va.
Nev.
Calif.
Utah
Colo.
Kan.
Mo.
Ky.
N.C.
Tenn.
S.C.
Ariz.
N.Mex.
Okla.
Ark.
Miss.
Ala.
Ga.
Texas
La.
FLA.
8
7½
7
6½
6
5½
5
4½
4
3½
3
2½
Scale in miles
0 200

FIGURE C2.9 Depth of cover (in feet) map.

precautions may involve the use of corrosion-resistant material or the application of protective coatings or wraps. The method of protection depends on the expected severity of the corrosive conditions.

All buried ferrous metal pipe be lined, and steel pipe must be coated and wrapped to meet the requirements of NFPA 24. Galvanizing, either internally or externally, does not satisfy these requirements. Buried steel pipe fittings must also be lined, and fittings and joints must be field-coated and wrapped after assembly.

Cement mortar lining should be in accordance with the requirements of AWWA C104 for ductile iron pipe and fittings, of AWWA C205 for steel water pipe, or of AWWA C602 when lining pipe in place. Polyethylene encasement in accordance with AWWA C105 is recognized for protecting ductile iron pipe. When coal-tar enamel protective coatings are used for steel water pipe, the requirements of AWWA C203 apply. AWWA C105 is referenced for polyethylene encasement of steel pipe as well.

Damage to piping due to corrosive atmospheric conditions can be a problem in areas with high levels of moisture, salt air, or fumes from corrosive chemicals. Where these conditions exist, corrosion-resistant pipe, fittings, and hangers should be used or a protective coating applied to exposed surfaces. In high-moisture areas, consideration should be given to the use of galvanized pipe or copper tubing for aboveground fire protection piping. Commercial grade corrosion-resistant paint can be used in a corrosive environment. As with any coating, maintenance is important for maximum effectiveness.

When a corrosive water supply exists, threaded thin-wall pipe should be avoided. When these conditions exist, piping wall thickness should be at least Schedule 40. NPS 8 (DN 200) and larger pipe may be Schedule 30.

Seismic Integrity. Fire protection piping systems require protection from damage when installed in areas subject to earthquakes. Areas where the potential for earthquake damage exists and special protection is required are determined by building codes, insurance requirements, and regulatory agencies.

Where earthquake protection is required for aboveground piping, NFPA 13 provides appropriate design criteria for automatic sprinkler systems and similar systems. NFPA 13 does not require seismic protection, but rather provides criteria where such protection is required by other codes and standards. Flexible pipe couplings, lateral and longitudinal sway bracing, and prescribed pipe clearances are strategically used to prevent damage to piping.

Flexible mechanical pipe couplings are mandated at strategic points in the system where building components are expected to move differentially. For example, flexible couplings are required near the top and bottom of sprinkler and standpipe risers on each floor of multistory buildings to accommodate maximum expected building drift. Except where flexible couplings are provided on both sides of walls, floors, platforms, and foundations, annular clearances up to 2 inches (50 mm) are necessary. Sway bracing is used to limit excessive lateral and longitudinal movement of mains and large branch lines where the system is expected to move with the building, such as below floor/ceiling slabs.

NFPA 13 provides additional details on the seismic protection of sprinkler systems. Alternate means of protecting automatic sprinkler systems from earthquake damage to those found in NFPA 13 may be used when an analysis demonstrates that acceptable system performance is achieved under expected seismic forces. For additional information on piping system stress analysis and supports, refer to Chaps. B.4 and B.5 of this handbook.

Aboveground Piping

Materials and Wall Thickness. Fire protection piping systems can convey many different suppression agents at a wide range of operating conditions. These agents include water and aqueous solutions, chemicals, and gases, each with different piping material requirements. Therefore, aboveground piping for fire protection systems must be designed and installed in accordance with the applicable NFPA standards relating to the system type being installed. The appropriate type of pipe is determined by design considerations, economics, ease of installation, and trouble-free service and environmental factors.

The vast majority of piping used in aboveground piping for fire protection is steel, which accounts for more than 90 percent of installations. Steel piping for fire sprinkler systems and most other water-based fire suppression systems must either be listed for its service or meet or exceed the requirements of one of the following specifications:

ASTM A795—Black and Hot-Dipped Zinc Coated (Galvanized) Welded and Seamless Steel Pipe for Fire Protection Service

ASTM A53—Welded and Seamless Steel Pipe

ASTM A135—Electric-Resistance Welded Steel Pipe

ASME B36.10M—Welded and Seamless Wrought Steel Pipe

Out of concern for potential clogging of small orifices, water mist systems are not permitted to be constructed of black steel or galvanized piping. Piping is required to have corrosion resistance equivalent to pipe made to the following acceptable standards:

ASTM A269—Seamless and Welded Austenitic Stainless Steel Tubing for General Service

ASTM A632—Seamless and Welded Austenitic Stainless Steel Tubing (Small-Diameter) for General Service

ASTM A778—Welded Unannealed Austenitic Stainless Steel Tubular Products

ASTM A789/A789M—Seamless and Welded Ferritic/Austenitic Stainless Steel Tubing for General Service

NFPA 13 provides wall thickness requirements for steel pipe in sprinkler systems. The wall thicknesses are dependent on pipe size and the method of joining. Heavier wall pipe is required when threaded fittings or cut groove mechanical fittings are used. Refer to Table C2.3.

TABLE C2.3 Sprinkler System Minimum Nominal Wall Thickness, Steel Pipe (ASTM A795, A53, A135) for Pressures up to 300 PSI

	Pipe diameter		
Fitting type	Up to NPS 5 (DN 125)	NPS 6 (DN 150)	NPS 8 (DN 200) and larger
Welded	Sch. 10	0.134 in (3.4 mm)	0.188 in (4.8 mm)
Roll grooved	Sch. 40	0.134 in (3.4 mm)	0.188 in (4.8 mm)
Threaded	Sch. 40	Sch. 40	Sch. 30
Cut grooved	Sch. 40	Sch. 40	Sch. 30

Nearly half of all steel piping used in sprinkler systems today is threaded, with the other half generally roll-grooved or welded. Only a small percentage utilizes cut grooves or other joining techniques. Yet only about half of the threaded pipe conforms to the wall thicknesses shown in Table C2.3. This is because NFPA 13, since the late 1970s, has also permitted other types and thicknesses of pipe to be used for sprinkler systems when the product has been evaluated and listed for fire protection service and installed per manufacturer's instructions.

The original special listed steel pipe was threadable lightwall pipe, with wall thicknesses approximating Schedule 10, but with tolerances tightly controlled such that the outside diameters were held to the low end of the allowable range. This permitted the maximum remaining wall thickness at the most vulnerable point in the piping system: the first exposed thread outside of the fitting. Even so, the remaining wall thickness at that point was substantially less than that of threaded Schedule 40 pipe. Underwriters Laboratories, the product evaluation organization that granted the first listing, developed a mechanism by which to evaluate the severity of the reduced wall thickness. The corrosion resistance ratio (CRR) was calculated for each type and size of pipe as the cube of the ratio of remaining wall thickness compared to that of Schedule 40 pipe in the same nominal diameter:

$$\mathrm{CRR} = (t/t_{40})^3 \tag{C2.1}$$

where t is the least wall thickness of the special listed pipe (at the first exposed thread root for threaded pipe) and t_{40} is the wall thickness at the first exposed thread root for Schedule 40 pipe of the same nominal pipe size.

The CRR values for various sizes of threadable lightwall pipe vary from as little as 0.18 to 0.35. Because the rate of pitting corrosion through the wall is believed to progress at a rate comparable to the cube of the wall thickness, these CRR values would indicate a life expectancy of 18 to 35 percent of comparable Schedule 40 steel pipe. The actual life expectancy needed depends on site-specific conditions related to the corrosivity of the water supply and other environmental factors.

Threadable lightwall products now account for almost a third of the threadable pipe installed in fire protection systems. But the fastest growing segment of the threadable steel sprinkler pipe market is made up of listed threadable alternates to Schedule 40. Like the threadable lightwall, they are manufactured with tightly controlled tolerances. However, their nominal wall thickness is closer to that of Schedule 30, so as to produce a first exposed thread root that permits a CRR value of 1.0, equivalent to Schedule 40 pipe.

Special listings are also being obtained for high-strength thinwall pipe for use in automatic sprinkler systems. Between Schedule 5 and Schedule 10 in nominal wall thickness, these products must be joined by roll-groove fittings or welding.

Gaseous suppression systems are often subject to higher operating pressures than water-based suppression systems. Additionally, thrust forces are a major consideration in the acceptability of piping and fittings. For gaseous systems, ferrous piping must be black or galvanized steel pipe conforming to either ASTM A53, Grade A or B or ASTM A106, Grade A, B, or C. Other piping materials appropriate for high pressures, such as stainless steel and copper, may be used for gaseous systems. When these are used, pipe wall thickness must be calculated per the Power Piping Code, ASME B31.1. Refer to Chapter B2 in Part B of the handbook. NFPA Standards do not permit the use of ordinary cast-iron or nonmetallic piping for gaseous suppression systems.

Copper tubing for water-based fire suppression systems must meet or exceed the requirements of ASTM B75 or ASTM B88. Copper tube used in sprinkler systems must have a wall thickness of Type K, L, or M. Bending of copper tube (Types K and L) is acceptable per NFPA 13, which specifies a minimum bend radius of 6 pipe diameters for NPS 2 (DN 50) and smaller pipe, and 5 pipe diameters for NPS 2-½ (DN 65) and larger pipe.

Several of the NFPA standards permit the use of other types of pipe and tube in aboveground piping systems if they are investigated and listed by recognized testing organizations for fire protection service. When used, the pipes must be installed in accordance with the limitations of the organization's listing, including all installation instructions.

When other pipe materials are investigated for use by a testing laboratory, many factors are considered. These include:

- Working pressure rating
- Beam strength affecting hanger spacing requirements
- Unsupported vertical stability
- Movement during sprinkler operation affecting sprinkler or nozzle distribution
- Corrosion resistance, both internal and external
- Resistance to failure when exposed to elevated temperatures
- Joining methods (strength, permanence, and fire resistance)
- Integrity during earthquakes

Special thermoplastic piping systems have been investigated and have been approved for use in some fire suppression system installations—specifically residential and other light hazard automatic sprinkler and water mist systems. The thermoplastic piping material that is currently listed is chlorinated polyvinyl chloride (CPVC). Not all CPVC pipe that is manufactured is acceptable for use in fire sprinkler systems. Only pipe that is specifically approved for fire protection service and that carries the listing mark of a nationally recognized independent testing laboratory such as Underwriters Laboratories, Inc. may be used. The basic standard used by UL to evaluate thermoplastic sprinkler pipe is UL 1821—Thermoplastic Sprinkler Pipe and Fittings for Fire Protection Service. Polyethylene piping is currently being investigated for use in residential sprinkler systems.

Special installation and design criteria exist for listed nonmetallic fire suppression piping systems. These criteria are contained in the listing information for the material and relate to:

- Limitations on use based on hazard classification
- Physical protection and pipe location
- Hanger spacing
- Piping restraint and deflection
- Maximum ambient temperature

Piping Joints. There are several acceptable means of joining aboveground fire protection piping. Steel pipe with sufficient wall thickness may be joined using *threaded connections*. See Table C2.3. Threads must be cut to the requirements of ASME B1.20.1, Pipe Threads, General Purpose.

In normal applications, threaded fittings which have been listed for use in fire suppression systems by a recognized testing laboratory may be used with steel pipe with wall thicknesses less than Schedule 40 for pipe sizes NPS 8 (DN 200) and smaller, and Schedule 30 for sizes NPS 8 (DN 200) or larger.

Sections of aboveground fire protection piping may be *shop-welded*. However, field welding of fire protection piping should be avoided. When it is necessary to cut or weld inside a building, strict fire prevention precautions as described in NFPA 51B must be established at the site.

Welding methods for joining fire protection pipe are described in the NFPA standard for the type of suppression system being installed. Welding methods that comply with AWS D10.9, Level AR-3 or Section IX of the ASME Boiler and Pressure Vessel Code are generally acceptable.

Mechanical couplings have become a popular method of joining aboveground fire suppression system piping. Mechanical couplings are assemblies of clamps, gaskets, and bolts. There are mechanical couplings appropriate for use on rolled groove, cut groove, and plain pipe ends. Refer to Chap. A9 of this handbook.

Couplings for rolled groove pipe may be used with pipe having a minimum wall thickness of Schedule 10 unless specifically evaluated and listed for use with for thinner wall pipe. Since cut grooved pipe reduces wall thickness similar to threads, fittings for cut grooved pipe are limited to Schedule 40 pipe in sizes less than NPS 8 (DN 200). Schedule 30 may be used in pipe sizes NPS 8 (DN 200) and larger with cut grooved mechanical fittings. Only mechanical couplings which have been investigated and listed by a recognized testing laboratory specifically for fire protection service may be used. Working pressures, temperatures, system rigidity needs, and external and internal loads should always be investigated when considering mechanical joining methods. Many styles of mechanically joined piping components are available including couplings, fittings, and valves.

Listed pipe couplings and fittings can be either flexible or rigid. *Flexible couplings and fittings* are defined as those that permit axial displacement, rotation, and at least 1 degree of angular movement of the pipe without inducing harm on the pipe. For pipe sizes NPS 8 (DN 200) and larger, angular movement is permitted to be less than 1 degree, but not less than 0.5 degree. *Rigid-type pipe couplings* are those that do not permit sufficient flexibility to meet the noted criteria.

Plain-end pipe fittings are popular for sprinkler system installation due to the lack of needed pipe-end treatment. When used, they must be listed and be used with pipe having a minimum wall thickness specified by the manufacturer's installation instructions.

Only mechanical couplings which have been investigated and approved by a regular testing laboratory specifically for fire protection service may be used. Working pressure, temperatures, system rigidity needs, and external and internal loads should always be investigated when considering mechanical joining methods. Many styles of mechanically joined piping components are available including couplings, fittings, and valves.

In general, copper tubing used in fire protection systems should be joined by brazing in accordance with the requirements of ASME B16.22. However, soldered joints may permitted for wet pipe systems protecting Light and Ordinary Hazard Occupancies when the maximum ceiling temperature is less than 150°F (65°C) and the tube is concealed. Where soldering is used, the fittings shall conform to the requirements of ASME B16.18.

Nonmetallic fire protection piping system components are joined using methods and materials that have been evaluated by the listing organization. A solvent cement is used for CPVC pipe. The methods and restrictions for joining nonmetallic pipe materials are detailed in manufacturer's installation instructions. These instructions are included as part of the product's special listing by the testing organization that evaluated and listed the product. Nonmetallic materials are prohibited for gaseous systems.

Due to the more extreme operating pressures and thrust forces associated with gaseous suppression systems, fittings capable of withstanding higher pressures are required. ANSI C.S.P. (carbon steel pipe) Class 150 and cast iron fittings are not permitted. For example, fittings for 600 psi (4 MPa) stored pressure Halon 1301 systems are required to have a working pressure of 100 psi (690 kPa). Due to the cooling effect that gaseous system discharges have on the piping system, the relationship between material temperature and coincident pressure rating must be considered. For additional guidance, refer to ASME B31.1 and manufacturer information.

Hangers and Supports. The adequate support of aboveground fire protection piping systems is important. NFPA standards provide detailed information on methods and rules of proper support of sprinkler system piping. Other standards commonly reference NFPA 13 regarding hangers and supports.

Aboveground piping must be independently supported from the building structure. Hangers may not be suspended from ceilings or nonstructural partitions. The points of connection to the structure must be capable of supporting the sprinkler system.

Hanger components for aboveground piping systems are typically made of ferrous materials. Nonferrous hanger components may be used only when they have been evaluated as acceptable through fire testing and are listed by a recognized testing organization.

Hanger components that attach to the pipe or to the building structure (such as clamps, concrete inserts, and hanger rings) must be listed. If the hanger components are not listed, the hanger and installation methods must be designed to support five times the weight of the water-filled pipe plus 250 lb (114 kg) at each point of connection, in addition to any other applied loads at the point of hanging.

The maximum spacing between hangers is related to the piping's rigidity based on the piping material and the pipe size, in accordance with the requirements of the installation standards or the piping's listing. In general, hangers for steel pipe NPS 1-½ (DN 40) and larger can be spaced no more than 15 ft (4.6 m) apart. For steel pipe smaller than NPS 1-½ (DN 40), the maximum spacing is reduced to 12 ft (3.7 m).

Nonmetallic piping systems and some special listed steel piping systems require closer hanger and support spacing. The maximum support spacings are detailed in the product's installation instructions. For example, maximum hanger spacing for NPS 1 (DN 25) diameter UL-listed CPVC sprinkler piping is 6 ft (1.8 m), increasing to 10 ft (3.0 m) for NPS 3 (DN 80) diameter CPVC pipe. For discussion of nonmetallic piping, refer to Part D of the handbook.

Many different styles and types of hangers are available for use with the various types of ceiling construction. Careful evaluation of hanger alternatives will result in a well-supported and reliable piping system. For additional details on hangers and supports, refer to Chap. B5.

Piping Layout and Design. The piping layout for most aboveground fire protection piping systems consists of risers, feed and cross mains, and branch lines. *Branch lines* are the pipe sections to which the sprinklers or nozzles are attached. The *feed mains* and *cross mains* are the pipes which supply the branch lines. *Risers* are essentially vertical feed mains.

The piping layout should be carefully considered to ensure that the resulting arrangement conforms to applicable standards in a manner that provides maximum efficiency and flexibility.

Considerations should include the following:

- Proper location and size of risers
- Available water supply location and its characteristics
- Building construction, height, and area
- Hazard classification
- Interferences to piping layout, including overhead cranes, ducts, and so forth.
- Architectural considerations such as aesthetics

There are three basic piping layout configurations for sprinkler systems: tree, loop, and grid. See Fig. C2.10. The tree configuration is the traditional piping layout. Loop and grid layouts have become popular with the use of hydraulically designed systems.

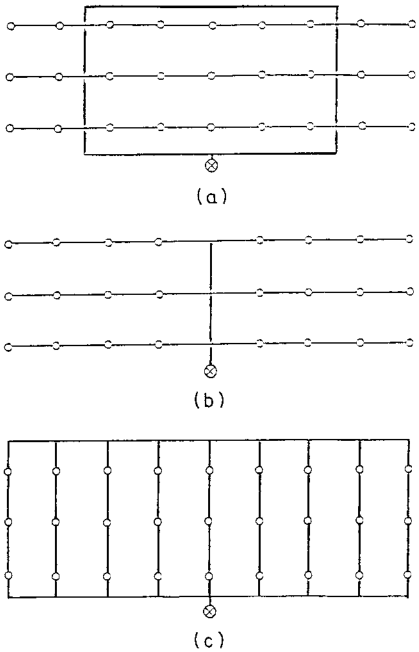

FIGURE C2.10 Typical sprinkler system piping layouts: (*a*) grid; (*b*) tree; (*c*) loop.

Piping layout of aboveground fire protection piping associated with automatic sprinkler systems involves the following principles:

- Provide automatic sprinklers throughout
- Do not exceed the maximum permitted area of protection per sprinkler
- Position sprinklers to optimize activation and water distribution

The most effective automatic sprinkler system provides full area coverage throughout the protected premises. Partial systems are sometimes used to protect hazardous areas in an otherwise nonsprinklered facility. The use of partial systems should be considered with caution, as it is difficult to predict with accuracy where a fire is most likely to occur. Additionally, a partial sprinkler system may not be capable of controlling a fully developed fire spreading from a nonsprinklered area.

The maximum protection areas per standard sprinkler are shown in Table C2.4. Systems with nonstandard sprinklers may exceed these areas when designed and installed in accordance with the listing limitations of the extended coverage or specialized sprinklers.

Sprinklers should be postioned to optimize activation and distribution. The spacing of branch lines and the location of sprinklers relative to walls, ceilings, structural members, and other obstructions are important factors.

The layout of aboveground fire protection piping for gaseous systems differs significantly from that of sprinkler systems. Rather than sprinklers located at prescribed spacing throughout an area, the objective of gas system nozzle placement is to achieve design gas concentrations by strategic nozzle placement to assure

TABLE C2.4 Maximum Protection Area per Standard Sprinkler

Hazard classification	Ceiling construction	Maximum protection area
Standard pendent and upright sprinklers		
Light	Unobstructed or noncombustible obstructed	225 ft^2 (20.9 m^2)
	Combustible obstructed	168 ft^2 (15.6 m^2)
Ordinary	All	130 ft^2 (12.1 m^2)
Extra	All	100 ft^2 (9.3 m^2)
High-piled	All	100 ft^2 (9.3 m^2)
Standard sidewall sprinklers		
Light	Combustible finish	120 ft^2 (11.1 m^2)
	Noncombustible or limited combustible finish	196 ft^2 (18.2 m^2)
Ordinary	Combustible finish	80 ft^2 (7.4 m^2)
	Noncombustible or limited combustible finish	100 ft^2 (9.3 m^2)

proper distribution and mixing of the gas when discharged. Also, due to working pressures up to 850 psi (6 MPa) and high discharge velocities, the support of the piping layout is critical. For additional information, refer to NFPA 12A or 12B for Halon suppression systems and NFPA 13 for carbon dioxide suppression systems.

Inspection and Testing. Prior to making connections to aboveground piping risers, underground piping must be flushed to remove any accumulated sediment or material which could affect suppression system operation.

To assure adequate cleaning, the minimum flow rate for the flushing should achieve a velocity of 10 ft/s (3 m/s) in the underground piping system.

Newly installed pipe should be hydrostatically tested for leaks and to detect faulty pipe, fittings, or joints. No visible leakage is acceptable for interior fire protection piping. Aboveground fire protection piping should be tested at a minimum hydrostatic pressure of 200 psi (1.4 MPa) for two hours. If the maximum system pressures exceeds 150 psi (1.0 MPa), the hydrostatic test pressure should be 50 psi (350 kPa) greater than the maximum pressure. For example, if the maximum system pressure was 175 psi (1.2 MPa), the hydrostatic test pressure should be 225 psi (1.5 MPa) minimum.

Underground Piping

Materials. The selection of appropriate underground pipe and fittings for fire service mains should consider economical installation, trouble-free service, and easy maintenance. The review of these factors should include the required methods of trenching and laying, the characteristics of the water to be handled, and the corrosiveness of the soil. The pipe material should be recognized by applicable codes and standards, and be suitable for the conditions under which it will be installed.

The majority of pipe for underground fire service mains currently being installed is ductile iron. *Ductile iron* is a cast-iron material where the primary graphite content occurs as nodules or spheroids. The graphite in this form maximizes impact resistance and ductility.

Ductile iron pipe that is manufactured in accordance with ANSI/AWWA A21.51/C151 may be used for fire protection service. The pipe class, or wall thickness, required for a particular condition should be determined on the basis of expected internal pressure, laying conditions (e.g., trench load, vehicle loads), and soil characteristics.

Design methods for determining the minimum required thickness of ductile iron pipe are provided in ANSI/AWWA 21.50/C150. These methods consider the conditions of trench load and internal pressure. The net thickness required to withstand the larger of bending stress or deflection caused by the trench load is added to the thickness required for the hoop stress due to internal pressure. Additional thickness is provided to the sum of these net thicknesses for service allowance and casting tolerance.

As previously indicated, steel pipe is generally not permitted for underground fire mains. However, due to its high strength, it is sometimes used by special permission for locations subject to vibrations or shock as from railroad tracks, truck crossings, or highways. When used, steel pipe should conform to AWWA C200, be standard weight for the size (Schedule 40 minimum), and be lined and coated for corrosion protection.

Nonmetallic pipe is available for use in underground fire service mains. Nonmetallic materials used include polyvinyl chloride, reinforced concrete, and polyethylene and glass fiber reinforced composites. The benefits of these materials may include their light weight and corrosion resistance. When used for underground fire protection service, the pipe should be listed, comply with applicable standards, and be installed according to the manufacturer's installation instructions.

Joints. Joints for underground fire protection piping vary with piping material. The joint must be suitable for the pipe material, working pressures, and the particular installation conditions. Manufacturers specifications should be followed.

The majority of cast-iron and ductile iron joints are push-on or mechanical. Bell and spigot joints that use jute and molten lead are no longer used but are found in many existing installations.

Push-on joints utilize a special rubber gasket. The rubber gasket is placed in the bell end of the pipe. When the spigot end of the pipe is pushed into the socket past the gasket, the joint is formed. Push-on joints do not require packing or caulking. For more details on push-on type joints, refer to Chap. A2 in this handbook.

Mechanical joints are those which utilize a bolted follower ring or gland to hold the gasket in place. The ring is placed over the spigot end, and bolts are used to compress the gasket and the bell end of the pipe. The bolts must be tightened in accordance with the manufacturer's recommendations. They should also be coated to minimize corrosion. Refer to Chap. A2 and A7 in this handbook for additional information regarding this type of joint.

Joints for steel pipe may be welded, threaded, or mechanical. Welding should conform to AWWA C206, Standard for Field Welding of Steel Water Pipe Joints. Since field welding can damage pipe coatings and linings, the weld ends are left bare. Coating and lining are then applied to the welded joints area after welding is completed. Any damage should be repaired.

Nonmetallic pipe is joined using approved butt fusion, push-on joints, mechanical fittings, or solvent cement and couplings. The limits of the approval and the manufacturer's recommendations should be followed.

Installation. Many factors need to be considered when laying underground pipe, including preparation of the trench, placing and aligning the pipe, making the joints, and anchoring, leak testing, and backfilling the installation.

Trenches should be excavated carefully to minimize the potential for crumbling walls or cave-ins. In sandy or lose soils, sheeting or bracing may be necessary. The bottom of the trench should conform to the grade of the pipeline. It may be necessary to excavate to an extra depth and prepare a stable pipe bed with a layer of firmly compacted soil. Pipes should not be laid in contact with rocks or boulders.

The trench should be wide enough to allow careful alignment of the pipe and convenient making up of the joint. Space should be provided below joints so that the joint can be properly made and so that there will be no localized bearing load on the joint.

Foreign material and water should not be permitted to enter the pipe during installation. Unattended open pipe ends should be closed using watertight plugs or by other means. Additionally, flotation of pipe during installation due to excessive trench water should be avoided by using sufficient backfilling.

Most types of underground pipe joints are not designed to resist significant axial forces that would tend to pull them apart. The friction between the pipe and the ground will help to resist this lateral movement. However, where such forces are significant such as at bends, tees, plugs, and at points where pipe is laid with a steep slope, special consideration is required. A typical location where lateral restraint is required is at the connection of a fire service main to a fire protection system riser. See Fig. C2.11.

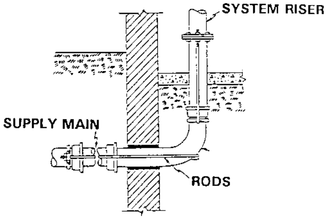

FIGURE C2.11 Typical fire protection riser restraint.

To restrict lateral movement, joints at bends, tees, and plugs should be anchored by clamps, rods, bolts, or concrete thrust-blocks. Mechanical fittings can be obtained with lugs for anchorage by tie-rods. Pipe clamps and anchor straps are also available.

When determining anchorage methods, consideration must be given to the maximum forces produced by water pressure, the direction in which the forces act, and allowances for favorable conditions such as pipe-to-earth friction and the resistance that can be provided by various anchorage methods.

Table C2.5 quantifies forces tending to separate single joints at such locations as plugs, tees, the base of hydrants, and bends having only one joint that needs

TABLE C2.5 Forces (in pounds) to be Resisted by Anchorage at Pipe Joints

Size, in.	Outside diam, in.	Separating force produced by 200 psi at tee and plug	Resultant of forces at bends		
			90 deg (1.41)	45 deg (0.765)	22½ deg (0.385)
6	6.90	7,500	10,600	5,740	2,890
8	9.05	12,900	18,200	9,880	4,970
10	11.10	19,400	27,400	14,850	7,480
12	13.20	27,300	38,200	20,850	10,520
14	16.65	38,400	54,200	29,400	14,800
16	17.80	49,700	70,100	38,000	19,150
20	22.96	76,400	108,000	58,400	29,450

anchorage; it also provides the resultant effect of the two forces acting at the ends of an elbow or bend.

As just indicated, thrust blocks may also be used to anchor horizontal pipes at fittings (see Fig. C2.12). For maximum effectiveness, thrust blocks should bear against undisturbed soil yet leaving the pipe joint accessible for inspection and repair. Thrust blocks should only be considered satisfactory where the bearing soil is suitable to provide support.

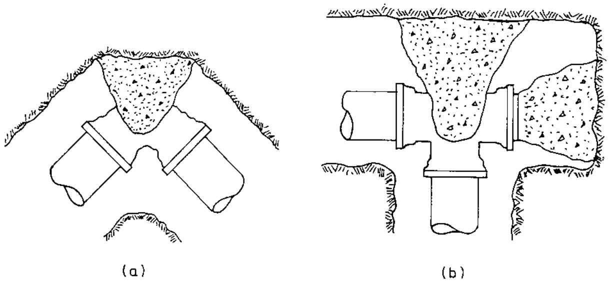

FIGURE C2.12 Typical thrust block configurations.

Thrust blocks should be made of concrete mixed not leaner than 1 part cement, 2½ parts sand, and 5 parts stone. The bearing area should ensure adequate resistance to the thrust force anticipated. NFPA 24 provides guidance on the required bearing area of concrete thrust blocks. The required bearing face area of concrete thrust blocks is dependent on the type of fitting being restrained (such as quarter-bend or tee), the system's water pressure, and the undisturbed soil resistance.

Coatings and linings are used for underground piping installations to resist the corrosiveness of water and soil. Protective coal tar enamel per AWWA C203 and cement-mortar coatings and linings (AWWA C205) are used extensively.

Polyethylene encasement, in accordance with AWWA C105, provides good protection to cast- and ductile iron pipe exposed to corrosive soil conditions. Cathodic protection systems may also be used for the external protection of iron and steel water mains against galvanic action.

The backfill for underground fire protection piping should be free of cinders, refuse, plant material, and rocks, and have a consistency that will compact firmly. The top of the piping shall be buried not less than 1 ft (0.3 m) below the frost line for the locality but in no case less than 2.5 ft (0.75 m) below the surface to prevent mechanical damage. The depth of cover for underground fire protection piping to avoid freezing in different regions of the United States and Canada is shown in Fig. C2.9. Due to variations in pipe material performance under varying temperature conditions, manufacturer's instructions should always be followed.

Inspections and Testing. Newly installed fire protection mains should be inspected for faulty pipe or fittings. The piping should be hydrostatically tested for tightness. Prior to hydrostatically testing newly installed underground pipe, the installation should be firmly backfilled to above the centerline of the pipe for cast- and ductile iron pipe. For nonmetallic pipe, the backfill should extend 1 to 2 ft (0.3 to 0.6 m) over the pipe, except at joints. All joints, regardless of pipe type, should be left exposed until tests are satisfactorily completed. If used, thrust-blocking should be adequately cured to restrict pipe movement.

Similar to aboveground fire protection piping, all new underground piping

TABLE C2.6 Typical Values for Hazen-Williams Formula

Type of pipe	Value of *C*
New or in condition of new, pipe	
Cast iron—unlined	120
Cast iron—cement lined	130
Cast iron—bituminous lined	140
Nonmetallic	140
Steel	140

should be hydostatically tested at not less than 200 psi (1.4 MPa) for 2 hours. If the service pressure and rating of the pipe installed exceeds 150 psi (1.0 MPa), the hydrostatic test pressure should be 50 psi (350 kPa) above the service pressure or rating.

An entire installation may be tested at once, or smaller sections may be tested using installed isolation valves. All entrapped air should be released from the test section using hydrants or connected aboveground fire suppression systems.

During the hydrostatic testing, all joints should be inspected for leakage. A small amount of leakage is permitted for new underground fire protection piping installations. The quantity of leakage is determined by pumping from a calibrated container. The maximum amount of leakage permitted by NFPA 24 for new pipe is 2 quarts per hour (1.89 l/h) per 100 gaskets or joints. The pipe diameter and the length of pipe gaskets are not considered. When a metal seated valve is used to isolate a test section, the allowable leakage is increased to compensate for valve leakage at a rate of 1 fluid ounce per inch of valve diameter per hour (30 ml/25 mm/h) for each metal seated valve isolating the test section.

Pipe Sizing

Most modern fire protection piping systems are hydraulically designed. That is, appropriate pipe sizes are determined by considering system demand, available water supply, and pipe network considerations such as friction loss, elevation changes, and pipe type.

TABLE C2.7 Variation in Hazen-Williams Coefficient *C* with Age of Unlined Cast-Iron Pipe

Age of pipe, years	Value of *C*
New	120
10	105
15	100
20	95
30	87
50	75

TABLE C2.8 Friction Loss in Pipes (f in Hazen-Williams Formula) Loss in pressure in psi per 1,000 ft of pipe $C = 100$*

Flow (gpm)†	Inside diameter of pipe (in) (nominal)‡						
	4	6	8	10	12	14	16
50	1.47	0.204					
60	2.06	0.285					
75	3.11	0.430					
100	5.29	0.735	0.181				
125	8.0	1.11	0.273				
150	12.1	1.55	0.381				
200	19.1	2.65	0.652	.0220			
250	28.8	4.00	0.985	0.332			
300	40.4	5.62	1.38	0.466	0.192		
400	68.8	9.55	2.35	0.793	0.326	0.154	
500	104.0	14.4	3.53	1.20	0.493	0.233	0.122
750	220.0	30.5	7.52	2.54	1.04	0.493	0.257
1,000	375.0	52.0	12.8	4.32	1.78	0.839	0.438
1,500	—	110.0	27.1	9.14	3.76	1.78	0.928
2,000	—	—	46.2	15.6	6.41	3.30	1.58
2,500	—	—	—	23.5	9.69	4.57	2.39
3,000	—	—	—	33.0	13.6	6.41	3.34
4,000	—	—	—	—	23.1	10.9	5.69
5,000	—	—	—	—	34.9	16.5	8.60

*For values of c different from 100, multiply the flow rates listed in Table C2.8 by the conversion factors listed in Table C2.9.

†For approximate interpolation between the *tabulated flows*, calculate the actual flow as a percent of the next lower tabulated flow, convert this percent to the given value in Table C2.10 and take this percent of the friction loss corresponding to the lower tabulated flow.

‡Nominal pipe diameters were used in calculating the tabulated friction losses. The inside diameter of pipe conforming to American National Standards Institute or American Water Works Association Standards will vary with the process of manufacture, material, and pressure classification and can be found in the Standards. Some published tables of friction losses are based upon actual internal diameters. The errors caused by minor differences in internal diameter are usually not significant when considered in relation to the uncertainties in assumed coefficients and rates of flow. If desired, adjustment for differences in diameter can be made by applying a factor $d(\text{nominal})^{1.25}/d(\text{actual})^{1.25}$ to the values given in Table C2.10.

The generally accepted formula for estimating friction loss in fire protection piping practice is the Hazen-Williams formula. The form of the Hazen-Williams formula used is:

$$f = \frac{4.52\,Q^{1.85}}{C^{1.85}\,d^{4.87}} \tag{C2.2}$$

Where f = friction loss, psi per ft
Q = rate of flow, gpm
C = Hazen-Williams pipe coefficient
d = internal pipe diameter, in

TABLE C2.9 Conversion for Different Values of C in Williams and Hazen Friction-Loss Table

Value of C	Conversion factor
140	0.537
130	0.615
120	0.714
110	0.836
100	1.000
90	1.22
80	1.51
70	1.93
60	2.57

In metric units, the formula is:

$$f = \frac{6.05\ Q^{1.85}}{C^{1.85}\ d^{4.87}} \tag{C2.2M}$$

Where f = friction loss, bars per m
Q = rate of flow, L/min

TABLE C2.10 Interpolation for Water Flows between Values Given in Table C2.8

Actual flow as % of next lower tabulated flow	Converted % to be applied to friction loss at next lower tabulated flow
105	110
110	120
115	130
120	140
125	151
130	162
135	174
140	186
145	198
150	211
160	238
180	296
200	361

Example: 8-in. pipe, flow 650 gpm.
Next lower tabulated flow 500 gpm.
Percent of lower flow = 650 ÷ 500 = 130 percent.
Converted percent = 162.
Tabulated lower friction loss at 500 gpm = 3.53.
Approximate actual friction loss = 3.53 × 130 percent = 4.58 psi/1,000-ft.

C = Hazen-Williams pipe coefficient
d = internal pipe diameter, mm

The value for coefficient C varies with pipe type and internal pipe conditions. The lower the capacity-carrying characteristics of the pipe, the lower the value of C. Table C2.6 lists C values for various pipe internal surfaces.

Increasing age generally decreases the capacity-carrying characteristics of unlined steel and cast-iron pipe. The variations of C with age from mildly corrosive water is shown in Table C2.7. Table C2.8 gives the friction loss of nominal pipe in psi per 1000 ft. When using Table C2.8, note the references to Tables C2.9 and C2.10.

Appendix E4 in this handbook contains additional pressure drop tables for different sizes of pipe.

The degradation of C accelerates with moderately or severely corrosive water. In these cases, the coefficient may be reduced to 60 to 75 for 15-year-old pipe. A coefficient of $C = 100$ is commonly used for average or new conditions. In sections of fire protection pipe in which there is normally no flow, such as sprinkler systems, deterioration is less rapid. For underground piping, lined nonmetallic pipe typically exhibits little decrease in capacity over time.

For moderate- and high-pressure water mist systems with pressures above 175 psi (1.2 MPa), the Hazen-Williams equation is not considered sufficient, and hydraulic calculations must be performed using the Darcy-Weisbach method. This method should also be used for water-based systems with additives, since this method can accommodate fluid densities and viscosities other than those of water.

The determination of proper pipe size for gaseous suppression systems is by complex floor calculations that consider the two phase (i.e., liquid and vapor) characteristics of the agent flowing through the pipe network. These calculation methods consider storage pressure, rate of pressure reduction, elevation line pressure, heat transfer of the piping network, density, and other factors. Details on acceptable calculation methods can be found in NFPA 12 for carbon dioxide systems and NFPA 12A for Halon systems.

CHAPTER C3
STEAM SYSTEMS PIPING

Daniel A. Van Duyne, P.E.
Senior Design Engineer, Northeast Utilities
Millstone Nuclear Power Station, Waterford, Connecticut
Formerly Assistant Chief Engineer, Mechanical Division
Stone & Webster Engineering Corporation
Boston, Massachusetts

INTRODUCTION

General

In this chapter we will first review the basics of piping system design for steam systems applications; we will then consider specifics for underground steam piping and steam piping used in power plants.

Definitions and Terminology

Condensate. Condensed steam.

Trunk line distribution system. Distribution system with a large-diameter line leaving the boiler plant; as lateral branches are installed off it for service, the trunk line gradually diminishes in diameter.

Main and feeder network distribution system. Distribution system that receives its supply of steam through a high-pressure feeder main leading from the plant through the network; the size of the feeder main required in this case is not as large as in a trunk-line system with the same boiler-plant steam pressure.

Protective conduits (typically for underground steam lines). Enclosures for underground steam mains and services to (1) protect the pipe and insulation from damage due to earth pressure and impact loadings, (2) allow free longitudinal expansion and contraction while held in proper alignment, and (3) prevent groundwater seepage or flooding by providing either drains or a completely waterproof structure.

Light water reactors (LWR). Nuclear power reactors of either the pressurized water reactor (PWR) or boiling water reactor (BWR) type.

ASME Class 1[1] *piping.* Includes main steam piping up to and including the first stop valve outside the reactor containment for BWRs and it is designated as ASME Class 1.

ASME Class 2[1] *piping.* Includes main steam piping up to and including the first stop valve outside the reactor containment for pressurized water reactors (PWRs) and BWR main steam piping after the first isolation valve outside the reactor containment and it is designated as ASME Class 2.

ASME B31.1[2] *piping.* Includes main steam piping downstream of the first stop valve outside the reactor containment in PWRs and piping external to boilers in fossil power plants, and it is constructed to the ASME B31.1 Code for Pressure Piping.

ASME B31.3[3] *piping.* Includes steam process piping in industrial plants and it is designed to the ASME B31.3 Code for Process Piping.

BEP. Boiler external piping.

DNBR. Departure from nucleate boiling ratio.

FFWT. Final feedwater temperature.

HARP. Heater above the reheat point.

IP. Intermediate pressure (turbine).

IV. (Governor-operated) intercept valve.

kPa. Pressure in kilo pascals.

LP. Low pressure (turbine).

MPa. Pressure in mega pascals.

NSSS. Nuclear steam supply system.

Pa. Pressure drop or pressure in pascals.

psi. pressure drop in pounds (force) per square inch, $\mathrm{lb_f/in^2}$.

psia. pressure in pounds (force) per square inch, absolute.

psig. pressure in pounds (force) per square inch, gauge.

PWHT. Postweld heat treatment.

VWO. Valves wide open (steam turbine).

Nomenclature

A. An additional thickness to provide for material removed in threading, corrosion or erosion allowance, and material required for structural strength of the pipe, as appropriate, in (mm). See Table C3.1 for selected values of A.

d. Inside diameter of pipe, in (mm). In using Eq. (C3.4), the value of d is for the maximum possible inside diameter allowable under the purchase specifications.

D_o. Outside diameter of pipe, in (mm). For design calculations, the outside diameter of pipe as given in ASME B36.10M and ASME B36.19M[4,5] and specifications shall be used in obtaining the value of t_m.

L. Length of pipe, ft (m).

P. Internal design pressure, psi (Pa).

P_a. Calculated maximum allowable internal pressure, psi (Pa), for straight pipe which shall be at least equal the design pressure. P_a may be used for piping products with pressure ratings equal to that of straight pipe.[6] For pipe products where the

TABLE C3.1 Selected Values of $A^{1,2}$

Type of pipe	A, in (mm)
Cast-iron pipe centrifugally cast or cast horizontally in green sand molds	0.14 (3.56)
Cast-iron pipe, pit cast	0.18 (4.57)
Threaded steel, wrought-iron or nonferrous ¾ in (19 mm) nominal and smaller	0.065 (1.65)
Threaded steel, wrought-iron or nonferrous 1 in (25 mm) nominal and larger	Depth of thread
Grooved steel, wrought-iron, or nonferrous	Depth of groove plus 1/64 in. (0.40 mm)
Plain-end steel or wrought-iron pipe or tube for sizes 1 in (25 mm) and smaller	0.05 (1.27)
Plain-end steel or wrought-iron pipe or tube for sizes over 1 in (25 mm)	0.065 (1.65)
Plain-end nonferrous pipe or tube	0.00

pressure rating may be less than that of the pipe (e.g., flanged joints and reinforced branch connections where part of the required reinforcement is in the run pipe), the design pressure shall be used instead of P_a.

ΔP. Pressure drop, psi (Pa).

S. Maximum allowable stress for the material at the design temperature, psi (Pa).

t. Specified or actual wall thickness minus, as appropriate, material removed in threading, corrosion or erosion allowance, material manufacturing tolerances, bending allowance (see Table C3.2), and material to be removed by counterboring, in (mm).

t_m. Minimum required wall thickness, in (mm). If pipe is ordered by its nominal wall thickness, the manufacturing tolerance on wall thickness must be taken into account.

W. Steam flow, lb_m/min (kg/hr).

Y. Density of steam, lb_m/cu ft (kg/m^3) [used in Eqs. (C3.2) and (C3.2M)].

y. A coefficient having values as given in Table C3.3. For pipe with a D_o/t_m ratio

TABLE C3.2 Minimum Thickness Prior to Bending* [18]

Radius of bend	Furnace bending	Induction and incremental bending	Rotary draw bending	Ram and roll bending
6 Dn	$1.06t_m$	$1.06t_m$	$1.09t_m$	$1.08t_m$
5 Dn	$1.08t_m$	$1.08t_m$	$1.14t_m$	$1.10t_m$
4 Dn	$1.14t_m$	$1.10t_m$	$1.20t_m$	$1.13t_m$
3 Dn	$1.25t_m$	$1.14t_m$	$1.26t_m$	$1.17t_m$
2 Dn		$1.22t_m$		
1.5 Dn		$1.30t_m$		

* t_m is determined by Eq. (C3.3) or (C3.4).

TABLE C3.3 Values of Coefficient $y^{1,2}$

Temperature °F (°C)	900 (482) and below	950 (510)	1000 (538)	1050 (566)	1100 (593)	1150 (621) and above
Ferritic steels	0.4	0.5	0.7	0.7	0.7	0.7
Austenitic steels	0.4	0.4	0.4	0.4	0.5	0.7

Note: The value of y may be interpolated between the 50°F (28°C) values shown in the table. For nonferrous materials and cast-iron, y equals 0.4.

less than 6, the value of y for ferritic and austenitic steels designed for temperatures of 900°F (482°C) shall be as calculated from Eq. (C3.1), as follows:

$$y = \frac{d}{d + D_o} \qquad \text{(C3.1)}$$

Types of Systems

Steam Distribution Systems. While there are no fixed standards for the design of steam distribution piping systems, most of the systems fall into one of two general classes: (1) a trunk-line distribution network system and (2) a main and feeder distribution network system.

In Case 1, the diameter of the trunk line leaving the boiler plant is large, and as lateral branches are installed off it for service, the diameter of the trunk line is gradually reduced as the needs for carrying capacity are diminished.

In Case 2, the main and feeder network distribution system receives its supply of steam through a high-pressure feeder main leading from the plant through the network. Advantage is taken of the pressure drop available for the transportation of large volumes of steam to the low-pressure network.

Figures C3.1 and C3.2 show typical steam distribution systems.

Since piping is the largest individual factor in the selection and design of a steam distribution system, the major items that must be resolved are as follows: (1) pipe size, (2) wall thickness, (3) materials selection, (4) types of joints, (5) proper insulation, (6) a protective conduit for the pipe and insulation from water and mechanical damage, (7) drainage of condensate, (8) provision for thermal expansion with controlling anchorage, and (9) safety provisions.

Underground Steam Piping. Underground piping for steam distribution has been a highly specialized field of engineering peculiar to the district-heating industry; today underground steam piping is also used to carry process steam. With the advent of groups of buildings such as in housing developments, institutions, and industrial plants, central heating systems and steam distribution problems are no longer restricted to the district-heating industry. Steam piping systems may be buried and not readily available for enlargement, replacement, and repair. Such piping must be protected from ground elements and excessive heat losses; thus it is important that before such a system is installed every phase of its design and operation be understood. Figures C3.1 and C3.2 show typical steam distribution systems which would be fed by underground steam lines.

See "Protective Conduits for Underground Lines" for more information about

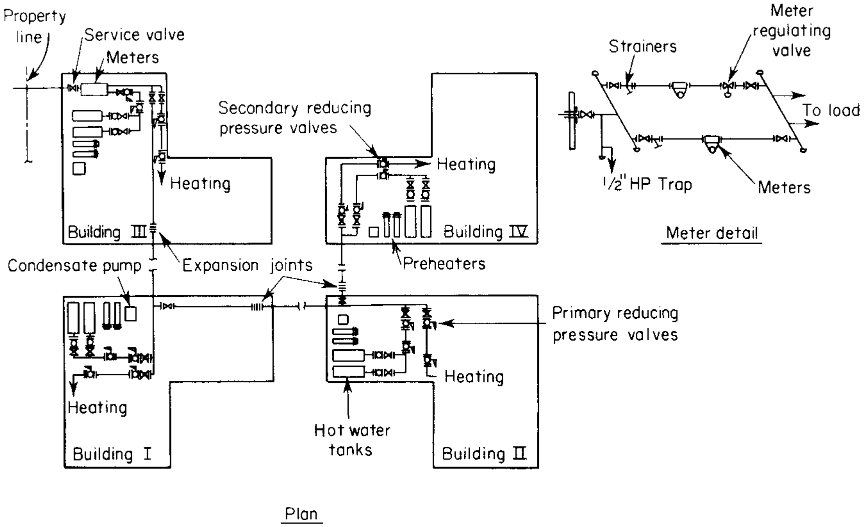
Property line
Service valve
Meters
Secondary reducing pressure valves
Heating
Heating
Building III
Building IV
Condensate pump
Expansion joints
Preheaters
Strainers
Meter regulating valve
To load
1/2" HP Trap
Meters
Meter detail
Primary reducing pressure valves
Heating
Heating
Building I
Hot water tanks
Building II
Plan

FIGURE C3.1 Typical steam distribution system for a housing development.

protective enclosures and "Drainage of Condensate" for condensate drainage considerations for underground piping.

Fossil-Fueled Power Plants. The main steam system conducts superheated steam from the steam generator (economizer plus evaporator and superheater) to the turbines as shown in Fig. B1.1 in Part B of this handbook. Figure C3.3 shows a simplified schematic of a main steam system. The main steam system may also provide steam for various auxiliary services.

The piping layout, for a steam power plant, in addition to paying due respect to economic factors, should consider (1) the layout's mechanical design or ability to function properly and efficiently with respect to the mechanical equipment which it serves, (2) the layout's convenience from an operating standpoint, and (3) the layout's appearance as a coordinated part of the plant. Although the relative importance of these basic points obviously falls in the order named, each has an important bearing on the acceptability of any arrangement, as will be discussed in the following sections.

B31.1[1] states that when boilers are connected to a common header, the connection from each boiler having a manhole opening shall be fitted with two stop valves having an ample free-blow drain between them. The discharge of this drain shall be visible to the operator while manipulating the valve. The stop valves shall consist preferably of one automatic nonreturn valve (see next to the boiler) and a second valve of the outside-screw-and-yoke type, or two valves of the outside-screw-and-yoke type shall be used. When a second stop valve or valves is required, it shall have a pressure rating at least equal to that required for the expected steam temperature and pressure at the valve, or the pressure rating at least equal to 85 percent of the lowest set pressure of any safety valve on the boiler drum and for the expected temperature of the steam at the valve, whichever is greater. All valves and fittings on steam lines shall have a pressure rating of at least 100 psig [700 kPa (gauge)] in accordance with the applicable American National Standard.

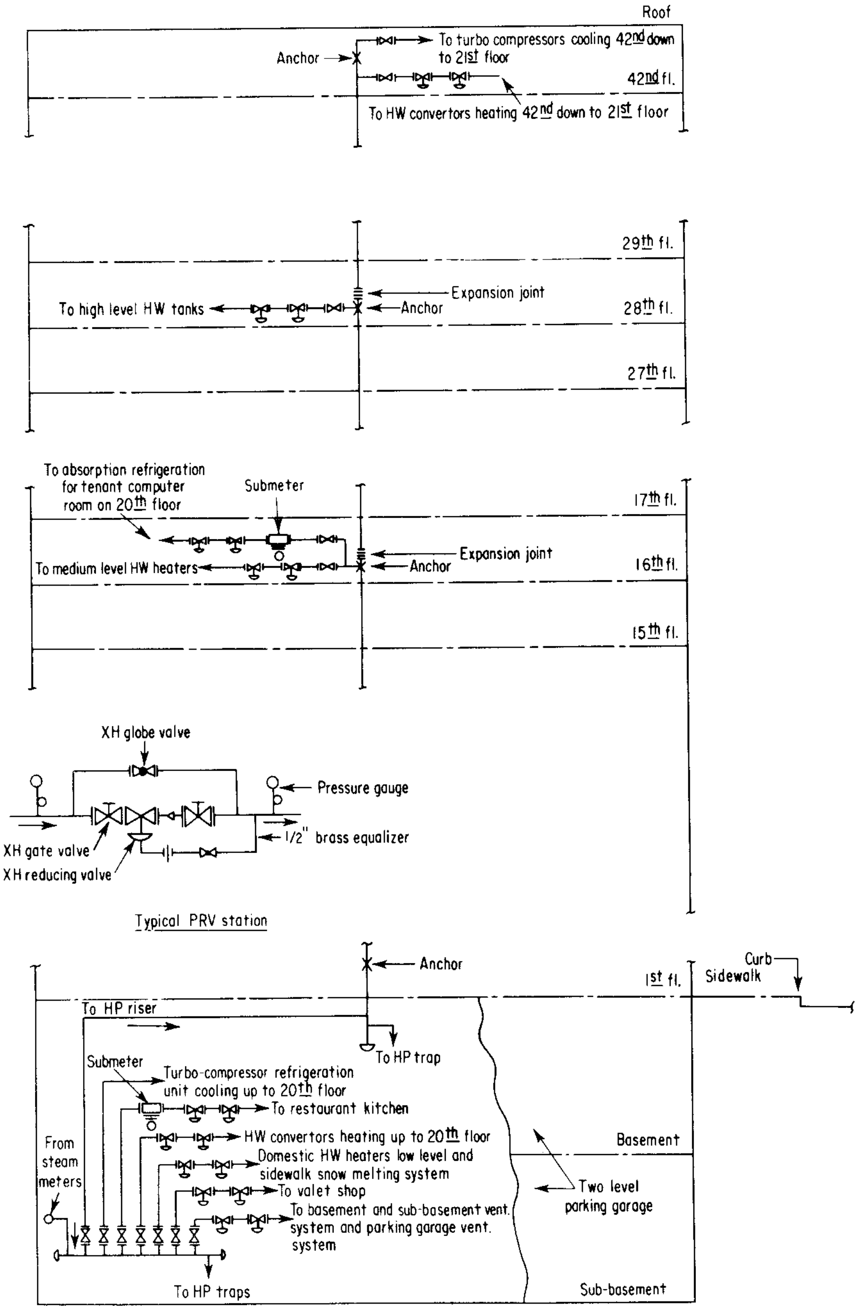
Roof
To turbo compressors cooling 42nd down to 21st floor
Anchor
42nd fl.
To HW convertors heating 42nd down to 21st floor
29th fl.
Expansion joint
To high level HW tanks
Anchor
28th fl.
27th fl.
To absorption refrigeration for tenant computer room on 20th floor
Submeter
17th fl.
Expansion joint
To medium level HW heaters
Anchor
16th fl.
15th fl.
XH globe valve
Pressure gauge
1/2" brass equalizer
XH gate valve
XH reducing valve
Typical PRV station
Anchor
1st fl.
Curb
Sidewalk
To HP riser
To HP trap
Submeter
Turbo-compressor refrigeration unit cooling up to 20th floor
To restaurant kitchen
HW convertors heating up to 20th floor
Basement
From steam meters
Domestic HW heaters low level and sidewalk snow melting system
To valet shop
Two level parking garage
To basement and sub-basement vent. system and parking garage vent. system
To HP traps
Sub-basement

FIGURE C3.2 Typical high-pressure steam-distribution system in a tower office building.

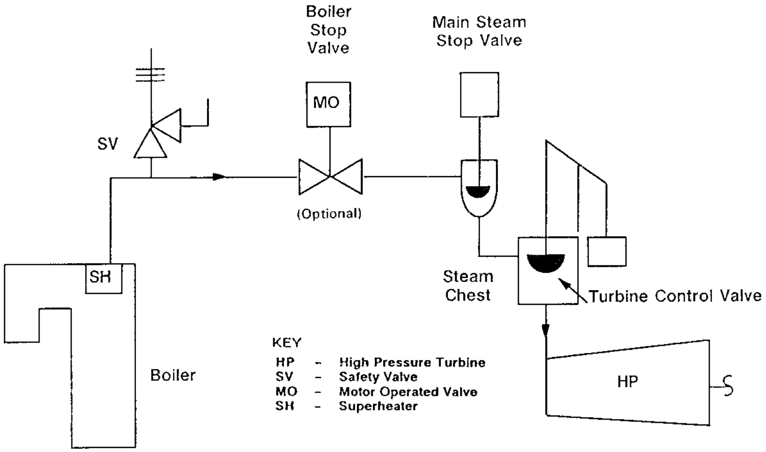
Boiler Stop Valve
Main Steam Stop Valve
SV
MO
(Optional)
SH
Steam Chest
Turbine Control Valve
Boiler
KEY
HP - High Pressure Turbine
SV - Safety Valve
MO - Motor Operated Valve
SH - Superheater
HP

FIGURE C3.3 Main steam system.

Availability of steam generators has increased to the extent that single units are used almost universally to supply the steam to turbines of sizes up to approximately 1000 MW. In fossil-fueled power plants exhaust steam from the high-pressure turbine is piped back to the steam generator, where it is reheated in a special section before being returned to the inlet of the intermediate pressure or reheat turbine.

The cold reheat system (CRS) and the hot reheat steam (HRS) system shown in Fig. C3.4 are treated here in one section because they are parts of the same overall system used for reheating steam. The CRS conducts steam from the outlet

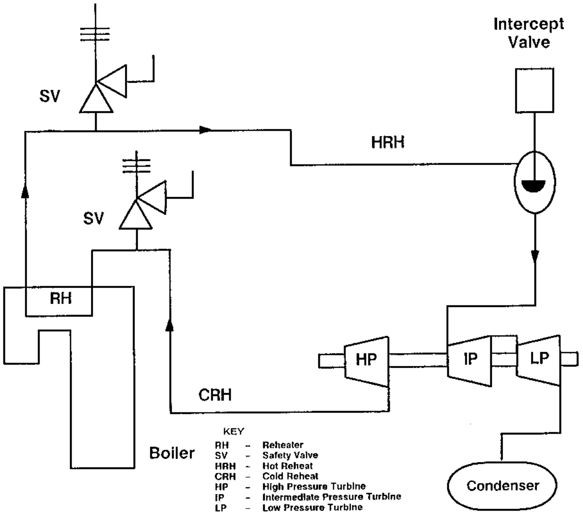
Intercept Valve
SV
HRH
SV
RH
HP
IP
LP
CRH
Boiler
KEY
RH - Reheater
SV - Safety Valve
HRH - Hot Reheat
CRH - Cold Reheat
HP - High Pressure Turbine
IP - Intermediate Pressure Turbine
LP - Low Pressure Turbine
Condenser

FIGURE C3.4 Reheat steam system.

of the high-pressure turbine to the reheater inlet and provides steam for the auxiliary steam and extraction steam systems. The CRS is the normal auxiliary steam source, but at low loads auxiliary steam is usually augmented from the main steam system via a pressure-reducing station.

The exhaust steam from the high-pressure turbine is transported in single or multiple leads into the reheater inlet. Each reheater may have a desuperheater for reheater outlet temperature control, and safety valves at the reheater inlet. A cross-connection (cross-tie) may be used between the two cold reheat leads to provide steam to the associated feedwater heater and the auxiliary steam system without creating a pressure imbalance at the reheater inlet. This system has provisions for isolation of the reheater for hydrostatic testing.

The extraction steam system conducts steam from the high-pressure turbine, cold reheat line, intermediate-pressure turbine, and the low-pressure turbines to the feedwater heaters. This extraction steam is required for feedwater heating. Feedwater heating increases cycle efficiency; in addition, the extraction steam system may provide steam for the feedwater pump turbine. In nuclear units, the system also removes moisture from the turbine to provide protection for the lower-pressure turbine blades and to increase turbine efficiency.

The hot reheat system conducts superheated steam from the reheater outlet header to the intermediate-pressure turbine or to the inlet of the low-pressure turbine. One or more hot reheat leads may be furnished. Each lead has a safety valve for reheater protection. A cross-connection between the two hot reheat leads is often furnished to ensure equal pressure at each reheat stop and intercept valve before entering the turbine.

Nuclear-Fueled Power Plants. Only the stationary light water reactor, either of the PWR or BWR type, is discussed in this chapter as being typical of nuclear practice. In the typical boiling water reactor the reactor is the steam generator. Water is circulated through the reactor core, producing steam which is separated from recirculation water, dried in the top of the reactor vessel, and directed to the steam turbine.

The pressurized water reactor uses two closed systems—a primary system including the reactor and its cooling system, and a secondary system including a turbine-generator, a condensate system, and a feedwater system. The two systems communicate with each other at the steam-generator tube interface, where pressurized water of the primary system transfers fission-reaction heat to the steam-generator feedwater in the secondary system, producing steam to drive the turbine generators. PWR power plants typically utilize two, three, or four primary loops, each containing a steam generator which transfers the energy from primary coolant to the feedwater on the secondary side.

The nuclear steam supply system (NSSS) customarily consists of those components in contact with the reactor coolant, and specialized auxiliary machinery.

The main steam system in LWRs transports steam from the outlet of the reactor/steam generators to the turbine stop valves. The main steam system also provides steam for various auxiliary services. Additionally, it provides a means of controlled heat release from the NSSS during periods of station electrical load rejection.

In PWRs, each steam generator supplies steam to a line which connects to a common main steam manifold. Valves in each line permit isolation of individual steam generators. Safety valves on each line provide pressure-relief protection for the steam generators. The main steam manifold supplies steam to the high-pressure turbine throttle valves, the moisture separator reheaters, and auxiliary steam loads.

The main steam system includes a turbine bypass system that provides a direct

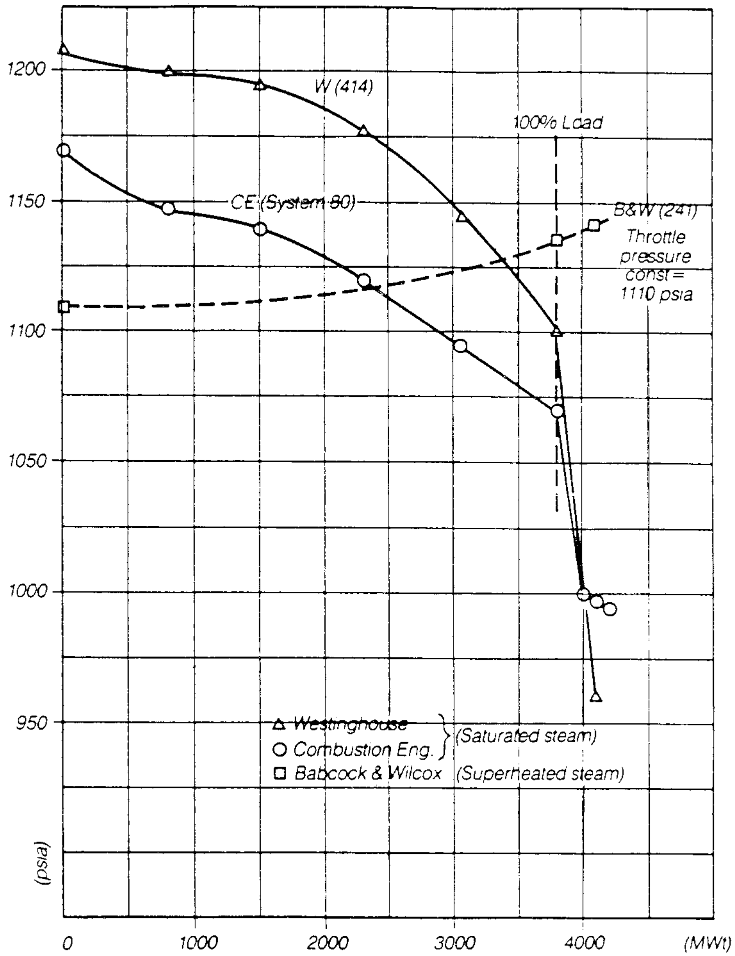

FIGURE C3.5 Typical NSSS performance curves.

steam path to the condenser and to the atmosphere in order to prevent unnecessary reactor trips during load rejections up to 100 percent of full electrical load.

The turbine bypass system also permits testing NSSS at power levels up to 55 percent without having the turbine loaded. It is also used to maintain reactor coolant temperature during hot standby and shutdown operation and is used to conduct controlled cooldown of the plant to the point where the residual heat removal system can be placed in operation.

For the PWR and BWR, the main steam system design pressure is typically about 1200 psia (8280 kPa) (see Fig. C3.5) and 600°F (316°C). Actual design conditions depend upon the specific reactor design. Main steam line sizing is determined by performing an economic analysis of pressure drop, pipe cost, and so on, with a maximum velocity of 15,000 fpm (250 fps) (4570 m/min, 76 m/s); see "Preventing

Turbine Overspeed" for more flow velocity data. Preliminary pipe sizing is based on a 3 percent pressure drop from the steam generator outlet to the turbine stop valves. Wall thickness is calculated using the equations presented in "Design Pressure."

For PWR and BWR main steam lines, turbine water induction problems are of a great concern as the main steam is saturated or contains some moisture. Prevention criteria are to be as specified in ASME Standard No. TDP-2,[7] "Recommended Practices for the Prevention of Water Damage to Steam Turbines Used for Electric Power Generation," Nuclear Fueled Plants.

Each type of nuclear plant has isolation valves outside of the reactor containment. BWR plants also have isolation valves in main steam lines inboard of the reactor containment. Since the BWR main steam is radioactive, it must be shielded, and special considerations must be made in its design to minimize crud traps (small deposits of radioactive contaminants in flow passages). When welding pipes together, the use of backing rings is avoided.

In LWR nuclear plants, reheating is achieved in a combined moisture separator and reheater unit. High-pressure turbine exhaust steam passes through the moisture separator portion of the unit, where most of the moisture is removed mechanically. The steam is then reheated in one or two stages by passing over the bundles of tubes containing high-temperature heating steam. For single-stage reheat and for the second stage of two-stage reheat, the heating steam is supplied from the main steam system at a point ahead of the turbine stop valves. Pipelines carrying live steam to reheaters belong to the main steam system. For two-stage reheat, the first-

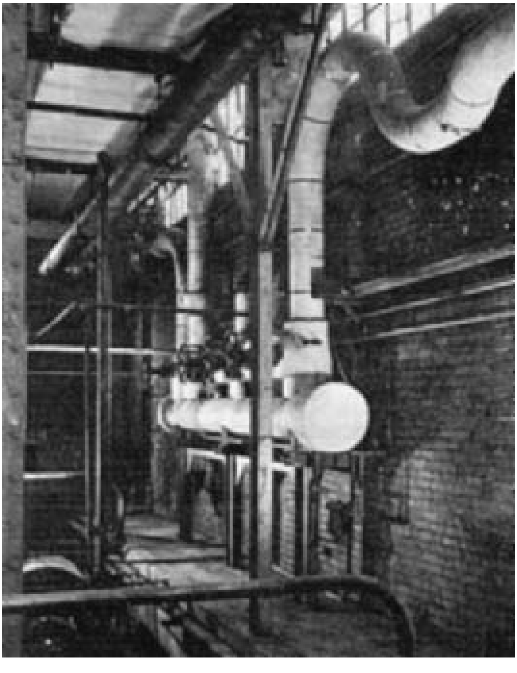

FIGURE C3.6 Steam header in industrial plant. *(Courtesy of Valve World.)*

stage heating steam supply is from an intermediate stage of the high-pressure turbine. More advanced liquid metal cooled fast breeder reactor (LMFBR) nuclear power plants may employ the liquid metal for steam reheating.

Industrial (Process) Power Plants. In industrial power plants, power generation may be considered as a by-product, depending upon the process steam requirements. Process steam is the main product of the cogenerating plant. Industrial turbines, with controlled exhaust and extraction pressures, are very efficient throttling devices (replacing valves), supplying steam at desired pressures to a process plant (e.g., oil refinery) while generating electricity. Variations in process heat and power demands usually do not coincide. In a case where electrical power generation requirements are specified, separate condensing steam turbines or gas turbines must be installed in the power plant to make up the difference between electric power demand and the process-heat dependent power generated by industrial steam turbines.

A typical steam header in a modern industrial plant is shown in Fig. C3.6, which is a photograph of an installation in the Wabash, Indiana, plant of the General Tire Company. As may be noted, the boiler leads and connections supplying steam to process, heating, pumps, and so on, are brought down to this header, which is located near the floor so that all valves are readily accessible.

REFERENCE DOCUMENTS

Various codes and standards and other reference documents used for the design of steam systems piping are listed under ‘‘References’’ at the end of this chapter. The reader may find other documents suitable for use in the area of steam systems piping.

Extensive safety requirements for power-piping systems are contained in the ASME Boiler and Pressure Vessel Code, Section I, Power Boilers, and ASME Section III, Nuclear Power Plant Components, and the ASME B31.1 Power Piping Code. In designing the component parts of piping systems within the jurisdiction of these codes, reference should be made to specific provisions as representing standards for minimum safety requirements, but this is not intended to indicate necessarily the best practice known to the art. Requirements of the Code for Pressure Piping are not compulsory in any state until they have been adopted as law by that state. They are in common use, however, and frequently are referred to in contract specifications and similar documents. Sometimes, even though the state has not adopted the codes, the insurance carriers make it a requirement to comply with certain codes.

The selection of suitable dimensional standards for flanges, fittings, valves, pipe, and bolting for ordinary service conditions can be made from the appropriate publications of the American National Standards Institute (ANSI), American Standards for Testing and Materials (ASTM), and American Society of Mechanical Engineers (ASME) which are referenced in the governing codes, such as B31.1, ASME I, ASME III, and ASME B31.3. Appendix E10 provides a partial list of international codes and standards.

DESIGN CONSIDERATIONS

Design Conditions

Design conditions or loadings include design pressure, design temperature, and design mechanical loads.

The ASME Code, Section III, NCA-2142.1[1] defines *design pressure* as follows: "The specified internal and external Design Pressure shall not be less than the maximum difference in pressure between the inside and outside of the item, or between any two chambers of a combination unit, which exists under the most severe loadings for which the Level A Service Limits are applicable. The Design Pressure shall include allowances for pressure surges, control system error, and system configuration effects such as static pressure heads." Level A service limits encompass those normal loadings which a component may be subjected in the performance of its specified service function.

The B31.1 code, paragraph 101.2[2] defines *internal design pressure* as follows: "The internal design pressure shall not be less than the maximum sustained operating pressure (MSOP) within the piping system including the effects of static head." *External design pressure* is defined as follows: "Piping subject to external pressure shall be designed for the maximum differential pressure anticipated during operating, shutdown, or test conditions."

The ASME Code, Section III, NCA-2142.1[1] defines *design temperature* as follows: "The specified Design Temperature shall not be less than the expected maximum mean metal temperature through the thickness of the part considered for which Level A Service Limits are specified. Where a component is heated by trace heating, such as induction coils, jacketing, or by internal heat generation, the effect of such heat input shall be considered in establishing the Design Temperature. The Design Temperature shall consider control system error and system configuration effects."

The B31.1 code, paragraph 101.3[2] defines *design temperature* as follows: "The piping shall be designed for a metal temperature representing the maximum sustained condition expected. . . . For steam, feedwater, and hot water piping leading from fired equipment (such as boiler, reheater, superheater, economizer, etc.), the design temperature shall be based on the expected continuous operating condition plus the equipment manufacturer's guaranteed maximum temperature tolerance."

The ASME Code, Section III, NCA-2142.1[1] defines *design mechanical loads* as follows: "The specified Design Mechanical Loads shall be selected so that when combined with the effects of Design Pressure, they produce the highest primary stresses of any coincident combination of loadings for which Level A Service Limits are designated in the Design Specification."

The B31.1 code, paragraph 101.5[2] identifies *design mechanical loads* generally as dynamic effects as follows: Impact forces caused by all external and internal conditions shall be considered in the piping design. Water or steam hammer is a form of impact load which is caused by rapid opening or closing of a valve in the system. Exposed piping shall be designed to withstand wind loadings, using meteorological data to determine wind forces. The effect of earthquakes, where applicable, shall be considered in the design of piping, pipe supports and restraints, using data for the site as a guide in assessing the forces involved. Piping shall be arranged and supported with consideration of vibration. Suitable vibration dampers, sway braces, restraints, and anchors shall be used to control the movement of piping due to vibration.

Design Pressure. The factors which determine the size of a steam pipe for a specific installation are as follows: (1) the initial steam pressure, and other conditions (temperature), (2) the minimum permissible discharge pressure, (3) the allowable velocity, (4) the quantity of steam, and (5) the length of line, including equivalent lengths for fittings. By knowing or assuming any one or all of these factors, the pipe size may be calculated by means of one of the pressure-drop formulas of Chap. B8 in this handbook.

The Unwin formula[8,9] has been widely used in the district-heating industry for many years. At elevated velocities, Unwin's formula gives pressure drops known to be higher than actual. This formula, in English units, is as follows:

$$\Delta P = \frac{0.0001306 W^2 L(1 + 3.6/d)}{Y d^5} \tag{C3.2}$$

where P = pressure drop (psi)
W = steam flow rate (lb/min)
L = length of pipe (ft)
d = pipe inside diameter (in)
Y = steam density (lb/ft^3)

Example C3.1. Find the pressure drop in an NPS 8 straight pipe 100 ft long with a flow of 40,000 lb/hr of saturated steam and an initial pressure of 150 psia [steam density (Y) = 0.3318 lb/ft^3].

Solution. P = 0.774 psi

The Unwin formula in Sl units is as follows:

$$\Delta P = \frac{0.6753 \times 10^6 W^2 L(1 + 91.4/d)}{Y d^5} \tag{C3.2M}$$

where P = pressure drop (Pa)
W = steam flow rate (kg/hr)
L = length of pipe (m)
d = pipe inside diameter (mm)
Y = steam density (kg/m^3)

Example C3.1M. Find the pressure drop in a 203.2 mm diameter straight pipe 30.48 m long with a flow of 18,144 kg/hr of saturated steam and an initial pressure of 1034 kPa [steam density (Y) = 5.313 kg/m^3].

Solution. P = 5337 Pa

Note that both of these examples represent the same physical pipe and flow conditions, and both result in the same pressure drop.

Pressure drops through fittings such as elbows, tees, and valves vary in proportion to the pressure drop through straight pipe. Because of this fact, it is possible to express the resistance of fittings as equivalent lengths of straight pipe and to compute the pressure drop for the whole line as if it consisted only of straight pipe as discussed in Chap. B8.

Where grid or network systems are involved, the computation of pipe size, pressure drops, and quantities of steam flowing presents a more complex problem. See Chap. B8 for a discussion of calculating these properties.

Minimum pipe-wall thickness for either heavy-wall or thin-wall pipe may be calculated from the following formulas from NC-3641 of Section III of the ASME Code[1] or equivalent, ASME B31.1 or B31.3 Code.[2,3] See Chap. B2 in this handbook for more information on wall thickness. The y factors adjusts for elastic or plastic properties of the respective materials over the expected range of operating temperatures:

$$t_m = \frac{PD_o}{2(S + Py)} + A \tag{C3.3}$$

$$t_m = \frac{Pd + 2SA + 2yPA}{2(S + Py - P)} \tag{C3.4}$$

Equation (C3.3) is used when outside pipe diameter D_o is considered for calculating required minimum wall thickness, t_m, whereas Eq. C3.4 is utilized with inside pipe diameter, d.

The allowable working pressure of pipe may be determined from the following equation:

$$P_a = \frac{2St}{D_o - 2yt} \tag{C3.5}$$

Large fossil power plants generally use a 2400 psig (16.6 MPa) drum-type steam generator or 3500 psig (24.2 MPa) once-through, supercritical steam generator. Small- and medium-sized power plants of less than 200 MW use lower standard pressures. For the large fossil power plants, the main steam design pressure is typically 2650 or 3860 psig (18.4 MPa or 26.7 MPa) (lowest superheater safety valve setting), and design temperature is 1015 or 1050°F (546 or 566°C) (maximum expected superheater outlet temperature). The steam at these conditions is superheated, so there is no moisture, but the lines must still have moisture-removal capabilities.

Boiler External Piping (BEP). ASME B31.1[2] Paragraph 122.1.1 presents the minimum pressure and temperature and other special requirements for boiler external piping including the following:

> It is intended that the design pressure and temperature be selected sufficiently in excess of any expected operating conditions, not necessarily continuous, to permit satisfactory operation without operation of the overpressure protection devices. Also, since the operating temperatures of fired equipment can vary, the expected temperature at the connection to the fired equipment shall include the manufacturer's maximum temperature tolerance.

For steam piping the value of design pressure, P, to be used in Eqs. (C3.3), (C3.4), and (C3.5) according to ASME B31.1 Paragraph 122.1.2 shall be as follows:

> (A.1) For steam piping connected to the steam drum or to the superheater inlet header up to the first stop valve in each connection, the value of P shall be not less than the lowest pressure at which any drum safety valve is set to blow, and the S value shall not exceed that permitted for the corresponding saturated steam temperature.
>
> (A.2) For steam piping connected to the superheater outlet header up to the first stop valve in each connection, the design pressure, except as otherwise provided in (A.4) below shall be not less than the lowest pressure at which any safety valve on the superheater is set to blow, or not less than 85 percent of the lowest pressure at which any drum safety valve is set to blow, whichever is

greater, and the *S* value for the material used shall not exceed that permitted for the expected steam temperature.

(A.3) For steam piping between the first stop valve and the second valve, when one is required by Para. 122.1.7, the design pressure shall be not less than the expected maximum sustained operating pressure or 85 percent of the lowest pressure at which any drum safety valve is set to blow, whichever is greater, and the *S* value for the material used shall not exceed that permitted for the expected steam temperature.

(A.4) For boilers installed on the unit system (i.e., one boiler and one turbine or other prime mover) and provided with automatic combustion control equipment responsive to steam header pressure, the design pressure for the steam piping shall be not less than the design pressure at the throttle inlet plus 5 percent, or not less than 85 percent of the lowest pressure at which any drum safety valve is set to blow, or not less than the expected maximum sustained operating pressure at any point in the piping system, whichever is greater, and the *S* value for the material used shall not exceed that permitted for the expected steam temperature at the superheater outlet. For forced-flow steam generators with no fixed steam and waterline, the design pressure shall also be no less than the expected maximum sustained operating pressure.

(A.5) The design pressure shall not be taken as less than 100 psig [700 kPa (gauge)] for any condition of service or material.

For example, for a fossil power plant with the lowest pressure at which any drum safety valve is set to blow at 2400 psig (16.6 MPa), the design pressure shall not be less than maximum sustained operating pressure for all steam piping connected to the steam drum or to the superheater outlet header up to the first stop valve, or 2040 psig (85 percent of 2400) (14.2 MPa, 85 percent of 16.6 MPa), whichever is greater, for piping as noted in A.2, A.3, or A.4.

Initial steam conditions at the steam generator outlet depend upon the plant under consideration. For process plants, steam parameters are dictated by the process requirements. In nuclear power plants, steam parameters depend upon the characteristics of the nuclear reactor which is the source of heat for generating steam. The maximum permissible heat-flux for fuel, reactor vessel pressure, and the DNBR are limiting factors influencing turbine initial steam conditions of nearly saturated steam at about 1100 psia (7.6 MPa) (see Fig. C3.5) in a NSSS with a PWR. In BWR the steam moisture problem assumes a major role in optimizing steam pressure at about 1000 psia (6.9 MPa).

The most freedom in selecting initial steam conditions is found in fossil-fueled power plants, which may be designed as subcritical or supercritical units. The question then arises: What are the most economical initial steam conditions for the present technological state of the art? Generally, from a thermodynamic point of view, an increase in initial steam temperature or pressure increases the power plant cycle efficiency (see Fig. C3.7).

Cold Reheat Systems. The cold reheat and hot reheat steam systems for fossil power plants, are designed to ASME B31.1. For PWR- and BWR-equipped plants the reheat lines are part of the turbine manufacturer's area of responsibility and are designed to turbine manufacturer's criteria which must equal or exceed the rules and requirements of ASME B31.1. Design temperatures and pressures are the maximum ones expected in the system (consult appropriate heat balance diagrams and system descriptions).

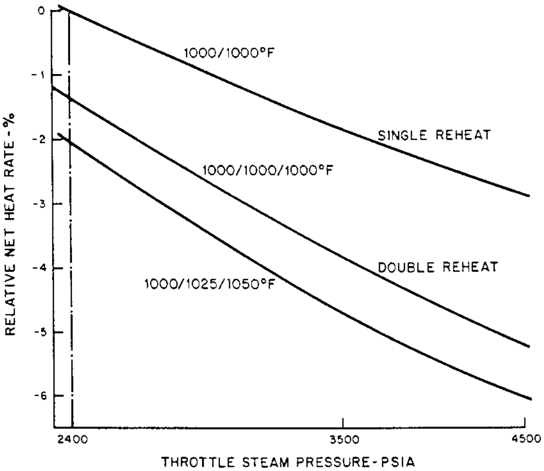

FIGURE C3.7 Effect of steam conditions on heat rate.

Extraction Steam Systems. The extraction steam system is designed to ASME B31.1. The extraction line design pressure and temperature depend upon the specific extraction point from the turbine as shown on the full-load heat balance diagram at valve wide open (VWO) and 5 percent overpressure. Extraction steam is typically superheated steam except for the lowest extraction points, which are in the wet steam region.

Extraction line sizing is determined by performing an economic analysis of pressure drop, pipe costs, and so on, with a maximum velocity limit of 15,000 fpm (250 fps) (4570 m/min, 76 m/s) for superheated steam. See "Determining Reasonable Flow Velocity" for more flow velocity data. Since extraction steam piping affects heat rate and output of a plant, this piping is sized so that pressure drop does not exceed about 5 percent of turbine stage pressure for the low-pressure lines and 3 percent for the higher-pressure lines. However, these pressure drops should be as low as practical, especially those related to the higher-pressure heaters. Also, keep them low to avoid erosion/corrosion problems.

Design Temperature. Historical development of throttle parameters reveals that in the field of throttle temperatures certain stabilization was reached, while the throttle pressures are continuously rising and the condenser back-pressure is steady at approximately 1 psia (7 kPa). The effect of steam-turbine throttle conditions on overall power plant efficiency is shown in Fig. C3.8. The results shown in Fig. C3.8 indicate that the efficiency increases by 1.5 to 2.5 points as pressure increases from 2400 to 5000 psia (16.6 to 34.5 MPa) at constant throttle and reheat temperature of 1000 to 1400°F (538 to 760°C). It is also seen that the 3500 psia (24.1 MPa) plant efficiency increases by nearly four points as the throttle temperature is increased from 1000 to 1400°F (538 to 760°C).

Some utilities have installed units using supercritical steam pressure; that is, pressures higher than 3206 psia (22.1 MPa), at which point the specific volumes of steam and water are equal. Thus, the main steam pressure for larger units lies between, say, 1450 psia (10.0 MPa) and the supercritical region. Main steam tempera-

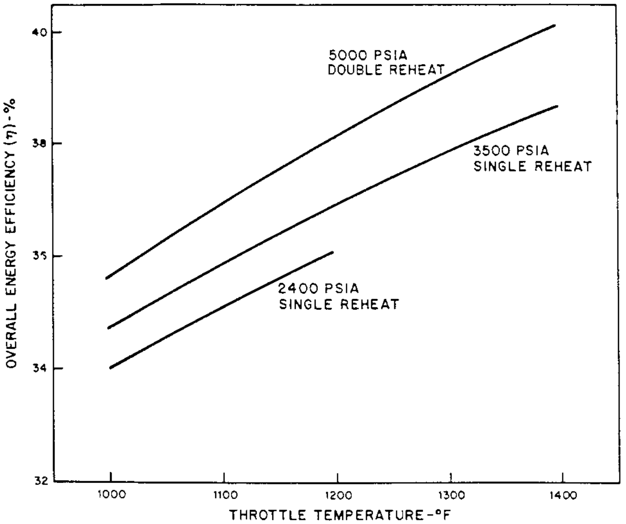

FIGURE C3.8 Effect of steam turbine throttle pressure and temperature on overall efficiency of a power plant.

ture may then range up to and beyond 1050°F (566°C), necessitating the upgrading of main steam line material as the temperature increases, as noted in the following recommendations:

Up to 775°F (413°C)—Carbon steel.

Up to 950°F (510°C)—Use 1¼ Cr.

From more than 950 to 1050°F (510 to 566°C)—Use 2¼ Cr.

From 1000 to 1200°F (540 to 650°C)—Consider using 9–12 Cr such as P91 as discussed in "Design Features, Pipe Size and Materials" later in this section.

From 1050 to 1200°F (566 to 650°C)—Consider using austenitic stainless steel.

Beyond 1200°F (650°C)—Use austenitic stainless steel.

Weight Effects. See Chap. B2 of this handbook for consideration of weight effects.

Thermal Expansion and Contraction Loads. Thermal expansion of pipelines can be compensated for by use of pipe bends, offsets, or expansion loops, or changes in direction of the pipeline itself. Where pipe bends or offsets can be used or where the pipeline direction is changed to provide for expansion, the provisions of the appropriate codes must be followed as required to ensure that all expansion stresses are within the applicable code limits.

Dynamic Effects. Consider transient effects for turbine trip and safety and relief valve discharge early in the design schedule so that pipe supports and structural steel are adequate to withstand dynamic loads. Typical turbine trip loads on pipe segments in a main steam system (Fig. C3.3) range up to 17,500 lb (78,000 N) after the main steam stop valve closes in approximately 100 milliseconds.[11] Corresponding

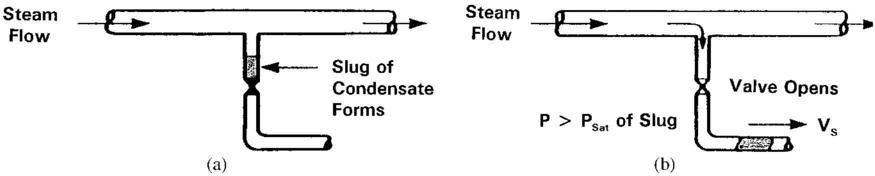

FIGURE C3.9 Steam-propelled water slug: (*a*) slug forms in closed drain line; (*b*) rapidly moving slug loads pipe due to impact on elbows or restrictions.

reheat steam system (Fig. C3.4) pipe segment loads range up to 13,200 lb (58,700 N) after the reheat intercept valve simultaneously closes in approximately 150 milliseconds.

Another significant dynamic event to be considered in steam piping is steam-propelled water slug,[12] as shown schematically in Fig. C3.9. When a drain valve opens, an upstream slug of condensate could be propelled through the drain piping, causing large loads at each bend until the slug dissipates or exits the piping. Condensate in nearly horizontal steam lines may be swept into slugs, which could also result in large steam-propelled water slug forces, particularly when initiating steam flow into cold piping. The recommended method to prevent steam-propelled dynamic events is to eliminate condensate in steam lines by proper line sloping and drainage, and by carefully warming up cold steam lines.

Also, nozzle design loads for safety and relief valve discharges should be considered. See Chap. B8 in this handbook for more information about transient flow analysis.

Design Features

Pipe Size and Materials. Specific materials for components used in steam piping systems must satisfy the requirements of the applicable codes. Any standards or specifications quoted in this chapter are minimum requirements. Construction at least equal to that required by the applicable codes is mandatory. The following discussion for piping and fittings is generally acceptable for American National Standards Institute (ANSI) and may be used as a guide. However, other codes and standards, including Deutche Industrie Norm (DIN), Japanese Industrial Standard (JIS), and many others such as British, Canadian, Norwegian, and Swedish codes, must be considered for worldwide steam piping applications. See Apps. E2 and E3 for pipe and tube properties, and see App. E6 for "International Piping Material Specifications." Appendix E5 lists ASTM/ASME material specifications acceptable for use for the ASME B31, Pressure Piping Code, and the ASME Boiler and Pressure Vessel Code, Sections I and III. Refer to App. E10 for international codes and standards.

Steel pipe, either seamless or welded, is generally used in steam systems, although the piping codes permit a variety of materials and several types of welded pipe. For welding and bending, a carbon seamless steel pipe is recommended. Seamless or electric-resistance welded steel pipe A53, Grade B and seamless steel pipe A106, Grade B are popular selections.

Adjusted ratings at temperatures above and below 750°F (399°C) for carbon and alloy steels and other alloys are given in the standards to govern their use under pressure or temperature other than the primary service ratings.

Selection of materials for temperatures above 750°F (399°C) from the various grades of alloys described in ASTM Specifications for high-temperature service is facilitated by reference to specific standards. The multiplicity of services in a large plant and the variety of dimensional standards and materials, possible joints, and different types of welding available make it desirable to provide proper standards, design details, and materials selection guidelines.

Main steam line sizing is determined by performing an economic analysis of pressure drop, pipe cost, and so on, with a maximum velocity limit of 15,000 fpm (250 fps) (4570 m/min, 76 m/s). See ''Determining Reasonable Flow Velocity'' for more flow velocity data. Preliminary pipe sizing is often based on approximately a 3 percent pressure drop from the superheater outlet to the turbine stop valves. Wall thickness is calculated using the equations presented in ''Design Pressure.'' Thus the main steam piping between the turbine and boiler may consist of one or more lines, with metallurgy varying from pressure-temperature rating requirements.

Because of the high cost of alloy piping, the selection of its size is usually the subject of an economic study where the increased pressure drop and its effect on turbine output are weighted against unit pipe cost including installation and hangers. For systems operating at or below 1050°F (566°C), chrome-moly alloy steel is often used in order to bring the pipe thickness down to an economically acceptable value for the steam pressures used.

Main steam piping at 1015°F (546°C) is typically 2¼ percent chrome, 1 percent molybdenum steel to ASTM A335, Grade P22 in U.S. fossil power plants (see ''Design Temperature''). However, there have recently been extensive investigations of using higher levels of chrome, ranging up to 12 percent. There is a gap between the low- and medium-alloyed ferritic steels on one side and the high-alloyed austenitic steels on the other, as shown on Fig. C3.10.[13] This gap in the creep rupture strength versus temperature diagram is occupied by the group of ferritic/martensitic 9–12 percent chromium steels. Compared to P22 (10 CrMo 9 10), the creep rupture strength of P91 is even twice as high.[14] Several of these 9–12 percent chromium steels have been developed and used worldwide,[13] including X 12 CrMo 9 1, which has been used as steel under hydrogen pressure for tubes and pipes mainly in chemical plants, and X 20 CrMo 12 1, which has been used with great success in power plant piping, tubing, and headers. A similar steel, X 10 CrMoVNb 9 1, developed in the United States, has been standardized in ASTM A213 for tubing (T91), in ASTM A335 for piping (P91), and in ASTM A336 for forging (F91). Parallel developments include the Japanese steel NF 61615.[15]

For the given initial steam conditions, power plant capacity, pipe material, and economic factors, the number of main steam leads should be optimized considering the steam generator manufacturer's header arrangement and the turbine valve arrangement. Selection of the operating steam pressure and temperature for a turbine-generator installation is based on an economic study or on experience derived from previous installations. Studies have shown that higher pressures and temperatures are associated with larger units or with higher expected fuel costs.

Main steam piping for the PWR and BWR is typically carbon steel to ASTM A106, Grade B or C.

In practical applications, steam generator and main steam line material limitations, plant reliability, and economic considerations influence the initial steam conditions. For a given pipe, an increase of initial steam temperature above certain values requires lower initial pressure. The maximum allowable stress values in tension for pipe materials for various metal temperatures may be obtained from the appropriate codes being used for design of the piping.

If better materials are used for main steam (MS) pipes, steam generators, and turbines, additional steam reheat may be beneficial, since this will allow higher throttle pressure at fixed throttle steam temperature. This additional steam reheat

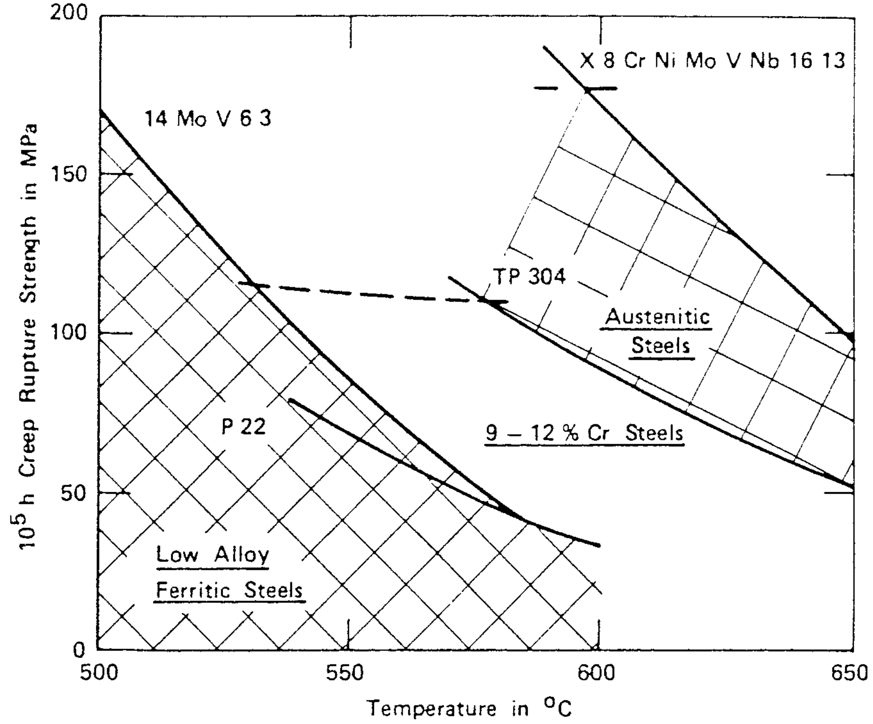

[Temperature in °F = 1.8 °C + 32.]

FIGURE C3.10 Creep rupture strength of heat-resistant ferritic and austenitic steels. *(From Ref. 13.)*

not only guards a turbine against operation in a high moisture region, but also increases fuel savings due to the carnotization of a Clausius-Rankine Cycle. See "Understanding the Extraction Steam System."

The high-pressure main steam piping must be designed with attention to the need for adequate size (pipe diameter), thermal expansion, piping supports, and drain of condensate, with the last factor being especially important when warming up the system preparatory to a start.

Pressure drop in steam lines to turbines and heat losses to the surroundings have an important influence on power plant performance. Long runs of pipe, or shorter runs of expensive, thick-walled, alloy steel, high-pressure pipe create the need for an economic determination of optimum pipe size. The higher the steam velocity, the smaller the required size of pipe, but unfortunately the frictional pressure loss increases as the square of the velocity. In an economic analysis, the higher capital cost of larger pipe diameters, including insulation and support, must be weighed against the lower operating costs resulting from better plant performance. For more information on the economic optimization of line sizes, see Chapter B8 in this handbook. The amount of insulation to apply is a separate economic consideration and is also governed by the maximum allowable surface temperature for personnel protection.

Piping Joints. To a large extent, pressure piping is welded. Welded joints have generally replaced most of the screwed or flanged joints in new construction of steam distribution system mains and customers' service lines. Joint construction must satisfy the requirements of the code applicable for construction.

Although welding has largely displaced flanged joints, some flanged connections are nevertheless required, particularly in making connections to flanged valves, expansion joints, or fittings where space limitations do not permit welding, or where easy removal of a fitting or valve is desired. Malleable, cast-iron, bronze, or brass fittings may be used for pressures not exceeding 250 psi (1725 kPa) and temperatures not in excess of 450°F (232°C). Cast or forged carbon steel fittings are required for pressures above 250 psi (1725 kPa). For temperatures above 775°F (413°C), carbon steel is not recommended. Welded fittings must comply with the American Standard for Factory-Made Wrought Steel Buttwelding Fittings (ASME B16.9[6]) or American Standard for Forged Steel Fittings, Socket-Welding and Threaded (ASME B16.11[16]) where applicable, and the material shall conform to ASTM Specification A216, A234, or A105. Special fittings or welded assemblies fabricated in either the shop or field are required to conform to the requirements of the appropriate codes.

Gaskets. Gaskets may be made of metal or other material which will not burn, char, or change in character so as not to perform the service intended. Asbestos is prohibited. Several alternatives for asbestos, including spiral-wound gasket applications, have recently been developed by the gasket manufacturers. A summary of material specifications for selected lines for a 150 MW circulating fluidized bed power plant is given in Table C3.4.

Threaded Joints. Limitations for threaded joints are contained in both the ASME Code, Section III[1] and ASME B31.1.[2] Paragraph 114 in B31.1 includes the following guidance, which is similar to that in the ASME code for Class 2 and 3 piping (threaded joints are not allowed in ASME Class 1 piping): All threads on piping components shall be taper pipe threads in accordance with the applicable Standards listed in Table 126.1.[2] Threads other than taper pipe threads may be used for piping components where tightness of the joint depends on a seal weld or a seating surface other than the threads, and where experience or test has demonstrated that such threads are suitable.

Threaded joints shall not be used where severe erosion, crevice corrosion, shock, or vibration is expected to occur, nor at temperatures over 925°F (495°C). Size limits for steam and hot water service [above 220°F (105°C)] shall be as listed in Table C3.5. Threaded access holes with plugs, which serve as openings for radiographic inspection of welds, are not subject to the limitations of Table C3.5. Threaded connections for insertion-type fluid temperature determination and sampling devices are not subject to the temperature limitations stated in Table C3.5. At temperatures greater than 925°F (495°C) or at pressures greater than 1500 psi (10,350 kPa), these threaded connections shall be seal-welded. The design and installation of insertion-type fluid temperature determination and sampling devices shall be adequate to withstand the effects of the fluid characteristics, fluid flow, and vibration.

Paragraph 104.1.2(C) of B31.1[2] states that "Where steel pipe is threaded and used for steam service at pressures above 250 psi (1750 kPa) or for water service above 100 psi (700 kPa) with water temperatures above 220°F (105°C), the pipe shall be seamless having the minimum ultimate tensile strength of 48,000 psi (330 MPa) and a weight at least equal to Schedule 80 of ANSI B36.10M.[4]

TABLE C3.4 Material Specification for Selected Lines (150 MW Circulating Fluidized Bed Power Plant)

	SYSTEM					
Item	Main steam	Hot reheat	Cold reheat first point extraction	Second point extraction	Condensate pump discharge; fourth, fifth, sixth point heater outlet	Third-sixth point extraction, raw water, service water, other condensate piping
Design pressure and temperature	1985 psig, 1015°F	590 psig, 1015°F	615 psig, 710°F	210 psig, 785°F	330 psig, 285°F	110 psig, 650°F or less
Pipe size, schedule	16.1 in OD, 2.10 $t_{\text{min.}}$ 11.7 in OD, 1.51 $t_{\text{min.}}$	22 in Sch 80	24 in Sch 60, 8 in XS	8 in Std	Over 2 in, Std Up to 2 in, Sch 80	Over 2 in, Std Up to 2 in, Sch 80
Pipe material	A335 P22	A335 P22	A106 Gr B	A335 P22	A106 Gr B	A53 Gr B
Pipe construction	Seamless	Seamless	Seamless	Seamless	Seamless	Seamless
Flange type	Not allowed	Welding neck	Welding neck	Welding neck	Welding neck	Slip-on or welding neck
Flange material	N/A	A182 F22	A105	A182 F11	A-105	A105
ANSI standard	N/A	B16.5	B16.5	B16.5	B16.5	B16.5 or MSS-SP-44
Class	N/A	900 RF	600 RF	300 RF	300 RF	150 RF
Gaskets	Not allowed	Spiral-wound	Spiral-wound	Spiral-wound	Spiral-metal	*
Fittings over 2 in						
ASTM spec.	A234 WP22	A234 WP22	A234 WBP	A234 WP11	SA234 WPB	A234 WPB, or A216 WCB
ANSI std.	B16.9, B16.28	B16.9, B16.28	B16.9, B16.28	B16.9, B16.28	B16.9, B16.28	B16.9, B16.28
Type	Butt weld	Butt weld	Butt weld	Butt weld	Butt weld	Butt weld, or flanged
2 in and smaller						
ASTM spec.	A182 F22	A182 F22	A105	A182 F11	SA-105	A-105
ANSI	B16.11	B16.11, MSS-SP-79	B16.11, MSS-SP-79	B16.11, MSS-SP-79	B16.11, MSS-SP-79	B16.11, MSS-SP-79
Rating	9,000 Class	3,000 Class	3,000 Class	3,000 Class	3,000 Class	3,000 Class
Type	Socket weld	Socket weld	Socket weld	Socket weld	Socket weld	Socket weld

* Spiral-wound if over 180°F; red rubber J-M Style 107, or equal if below 180°F; Vellumoid if oil.

TABLE C3.5 Threaded Joint Size Limits for Steam and Hot Water Service Above 220°F (105°C)[1,2]

Maximum nominal pipe size	Maximum pressure	
	psi	kPa
3	400	2,750
2	600	4,150
1	1200	8,300
¾ and smaller	1500	10,350

Note: For instrument, control, and sampling lines, refer to Para. 122.3.6.[2]

Paragraph 102.4.2 of B31.1[2] states that "The calculated minimum thickness of piping (or tubing) which is to be threaded shall be increased by an allowance equal to thread depth; dimension *h* of ASME B1.20.1 or equivalent shall apply. For machined surfaces or grooves, where the tolerance is not specified, the tolerance shall be assumed to be 1⁄64 in (0.40 mm) in addition to the specified depth of cut."

Cast-Iron Flanges. It is advisable to express a word of caution regarding connecting cast-iron flanges and fittings to steel flanges and fittings. Class 25 and Class 125 cast-iron flanges have plain faces, while the Class 250 flanges have raised faces which come out practically to the inner edge of the bolt holes whereas those of steel flanges are narrower and stop some distance inside the bolt holes. The plain face or wide raised face on cast-iron fittings and flanges is a necessary precaution to prevent cracking the flange in drawing up the bolts. Numerous instances have been observed where cast-iron flanges have cracked when being bolted to raised-face steel flanges. In cases where it is necessary to bolt cast-iron and steel flanges together, the raised face of the steel flange should be machined down flush with the flange edge. For the same reason, when lap-joint pipe is made up with cast-iron flanges, the lapped end should be brought out to the inner edge of the bolt holes. These type of flange joints should only be used where permitted by the governing code.

For reasons similar to those just stated, it is inadvisable to use alloy steel bolts in cast-iron flanges. Commercial carbon-steel bolts (A307, Grade B) are amply strong for use in cast-iron flanges up to a temperature of 400°F (205°C), and there is no occasion to risk cracking such flanges through the use of high-strength bolts. Steel flanges are properly designed, both as regards dimensions and material, for use with a narrow raised face and alloy-steel bolts.

Valves. Valves must be of a design at least compatible with the service conditions and constructed of the materials allowed by the appropriate codes for design pressure and design temperature.

ANSI pressure class determination should be based on the design and operating conditions of the system (i.e., temperature, pressure). It should be noted that for valves with elastomeric or plastic gaskets, packing, or seating elements, the valves may not meet the entire range of pressure/temperature conditions for their designated ASME pressure class. See Chap. A10 for selection and application of valves.

For power work, the following codes give pressure/temperature tables for valves:

ASME B16.34—“Valves-Flanges, Threaded, and Welding End”[17]
API602—“Compact Steel Gate Valves, Fifth Edition”[19]

When selecting a valve, consider the following:

- The system safety category
- The design and operating conditions of the system, or portion of the system in which the valve will be installed
- Valve function; that is, isolation, throttling, or modulating
- Radioactivity level, if any
- Whether pressure drop is critical
- Preferred end connection; that is, socket weld, butt weld, threaded, flanged, or mechanical
- Special features, including minimum operating time, stem leakoff required, exceptional tightness required for seat and/or seals, body taps
- Material requirements; that is, alloy, carbon steel, hard-facing, and so on

Isolation and Control Valves. Selecting the proper valve for a particular purpose depends on the operating pressure and temperature and on the type of valve best-suited for the use to which it will be put. In general, it is customary to use *gate valves* in locations where pressure drop through the valve is a consideration, and where the valve will either be wide open or fully closed. Guard valves and shutoffs for boiler and turbine leads, and so on, are almost always of the gate type. *Globe valves* are commonly used in water, steam, and air lines for control or throttling purposes, as the globe type permits closer regulation of flow. Throttling often involves some steam cutting of the seat and disk, and these parts of globe valves are more easily repaired or replaced than in gates. Some appropriate uses for globe valves under these conditions are turbine and engine throttles, bypasses around traps or reducing valves, and hand-feed regulation on boilers.

Check valves are required in feed lines close to a boiler to prevent water or steam from blowing back from the boiler, if, for any reason, the feed line ruptures or its pressure fails. It is advisable to use check valves in individual pump or trap discharges before they join a common header and where different lines are joined together to discharge into a common header. A check valve cannot be counted on for closing a line off completely against pressure working back through, but it will stop a considerable flow. In pump discharges where the header remains under pressure after the pump is shut down, a gate valve should be provided in addition to the check valve. It is also desirable to provide a small relief valve on the pump suction to prevent pressure backing up through the pump and overpressurizing the suction side of the system pump.

With pressure-reducing or other control valves it is desirable to select a size that is loaded somewhere near capacity under normal operation, as such valves are then more stable in their operation. If there is considerable seasonal variation in the load on a reducing or control station, it is good practice to install a large and a small valve in parallel, and use the one best fitting the load at any particular time. It is frequently desirable to install a hand-operated bypass around a control valve so that service can be maintained while the special valve is being repaired. Such an arrangement with provision for shutoff to repair the special valve while the line

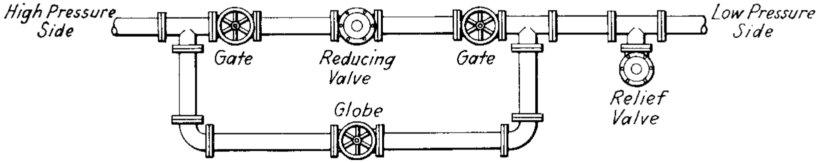

FIGURE C3.11 Pressure-reducing station.

is in operation is shown in Fig. C3.11, which includes flanged valves. Advantage can be taken of improved valve design, wherein weld ends are used while still permitting the internals to be removed for repairs. Main steam lines usually do not use flanges. Filler pieces should be provided between a flanged reducing valve and the adjacent gates, as reducing valves usually are constructed so it is impossible to remove all the end-flange bolts when they are bolted directly to other valves or fittings because of close clearance at the valve bonnets or fitting necks. For convenience in removing these valves from the line, flanged connections are used frequently at such points, even though the rest of the line is made with screwed or welded joints. When reducing from a pressure that requires the use of a heavy standard for flanges and fittings to a pressure with which a lighter standard is used or to which low-pressure equipment is connected, relief valves should be provided on the low-pressure side. The use of the heavier standard should be continued through to the last valve ahead of the relief valve, as it is possible to have full pressure up to that point. A reducing valve seldom has a tight shutoff, and at times of negligible steam consumption, leakage through the valve may be enough to build up full line pressure on the low-pressure side. The ASME Code for Power Piping requires that the combined discharge capacity of the safety or relief valves shall be such that the pressure rating of the lower-pressure piping will not be exceeded in case the reducing valve sticks open.

Safety and Relief Valves. Safety and relief valves are defined in Section I of the ASME Code[20] as follows:

> Safety Valve: An automatic pressure relieving device actuated by the static pressure upstream of the valve and characterized by full-opening pop action. It is used for gas or vapor service.
>
> Relief Valve: An automatic pressure relieving device actuated by the static pressure upstream of the valve which opens further with the increase in pressure over the opening pressure. It is used primarily for liquid service.
>
> Safety Relief Valve: an automatic pressure-actuated relieving device suitable for use either as a safety valve or relief valve, depending on application.

The construction and method of installing safety valves for power boilers are explained in Section I of the ASME Boiler and Pressure Vessel Code.[20] The boiler safety valve requirements are excerpted as follows:

> Each boiler shall have at least one safety valve or safety relief valve and if it has more than 500 ft^2 [46 m^2] of bare tube water-heating surface, or if an electric boiler has a power input more than 1100 kW, it shall have two or more safety valves or safety relief valves. For a boiler with combined bare tube and extended water-heating surface exceeding 500 ft^2 [46 m^2], two or more safety valves or

> safety relief valves are required only if the design steam generating capacity of the boiler exceeds 4000 lb/hr [1810 kg/hr]. . . .
>
> The safety valve or safety relief valve capacity for each boiler shall be such that the safety valve, or valves will discharge all the steam that can be generated by the boiler without allowing the pressure to rise more than 6 percent above the highest pressure at which any valve is set and in no case to more than 6 percent above the maximum allowable working pressure. . . .
>
> One or more safety valves on the boiler proper shall be set at or below the maximum allowable working pressure. If additional valves are used the highest pressure setting shall not exceed the maximum allowable working pressure by more than 3 percent. The complete range of pressure settings of all the saturated-steam safety valves on a boiler shall not exceed 10 percent of the highest pressure to which any valve is set. Pressure setting of safety relief valves on high-temperature water boilers may exceed this 10 percent range.

Additional requirements and requirements for alternate protection against overpressure are included in Section I of the ASME Boiler and Pressure Vessel Code,[20] Section PG-67.

Where more than one safety or relief valve is used on a boiler or other pressure vessel, it is desirable to set one or more of the valves to relieve at a lower pressure than the rest. This serves as a warning before too much steam is lost through all the valves opening at once and also tends to facilitate repairs by confining any cutting action to the one or more valves that open first. In some cases an extra safety valve, known as the power-control valve, is set to blow before the others and is mounted above a gate valve so that it can be removed for repairs while the boiler or steam line is in service. The capacity of this valve cannot be considered in meeting Code or other safety requirements, because it might be shut off. Where the hazard involved does not require the installation of a full-size relief valve, it is sometimes desirable to install a small-size pop valve as a telltale to give warning when the usual working pressure is exceeded. The operator can then attend to restoring it to normal conditions. A safety valve for use with a compressible fluid, such as steam or air, is distinguished from a relief valve in that a safety valve has an adjusting, or huddling, ring and chamber to control the amount the pressure blows down before the valve reseats.

Bolting. In bolting cast-iron flanges or steel flanges to cast-iron flanges, valves, fittings, and so forth, bolts must be of carbon steel equivalent to ASTM A307, Grade B, without heat treatment other than stress relief. Otherwise, they may be too strong for the cast-iron flanges. Threads in accordance with the coarse-thread series of the standard for screw threads, ASME B1.1 and B18.2.1,[21,22] are recommended for carbon-steel bolts. Carbon-steel bolts conforming to A307 may be the standard regular or heavy hexagonal-head bolts and must be used with standard heavy semifinished hexagonal nuts, B18.2.2,[23] which conform to ASTM A194.

For high-temperature service or for insurance of a tight joint in the case of steel flanges, bolts or stud bolts should be of alloy steel, conforming to ASTM A193, typically Grade B7. Nuts must be of steel according to ASTM A194, Grade 2H.

Bolt and nut selection for use with flanges in power piping may often be made from the alloy-steel bolts listed in Tables 112 and 126.1 and Section 108.5 of ASME B31.1.[2] See Chap. A7 in this handbook for additional information on bolted joints.

Following is a summary of the principal bolting selections by the architect/

constructor for a typical 150 MW circulating fluidized bed power plant (see Table C3.4):

- *Bolt studs:* Eight threads per in (25.4 mm) [coarse thread for less than 1 in (25 mm)] with two nuts.
- No bolted joints are allowed for main steam.
- *Stud material:* A193, B16 for hot reheat, if present; A193, B7 for all other systems noted.
- *Nuts:* Hexagon semifinished Heavy Series per B18.2.2.[23]
- *Nut material:* A194, Grade 4 for hot reheat; A194, Grade 2H nut standard for all other systems noted.

Protective Conduits for Underground Lines. Protective conduits for underground steam mains and services are necessary to protect the pipe and insulation from damage due to earth pressure and impact loadings; to allow free longitudinal expansion and contraction while held in proper alignment; and to prevent groundwater seepage or flooding by providing either drains or a completely waterproof structure.

Many types of conduits are used by the steam-piping industry today. They can be categorized into the following general classifications: prefabricated, boxtype, solid pour, granular fused, and tunnels.

Prefabricated conduits are popular with utilities located in large cities, where conditions exist such as congested subsurface, heavy surface traffic, tidewater, and rock areas. The ideal design for these conditions is one with the smallest cross-sectional area, consistent with thermal requirements, to fit into limited subsurface space. Two prefabricated designs are shown in Fig. C3.12.

In Fig. C3.12*a*, the insulated pipe is placed within a corrosion-resistant, helically corrugated metal jacket which is protected with a heavy asphaltic coating. In Fig. C3.12*b*, the insulated pipe is placed concentrically within the corrosion-resistant metal jacket, and the intervening space between jacket and insulation is poured full of high-melting-point asphalt, which is a protective medium for the insulation. Some of these prefabricated designs are also available with cast-iron casings with fittings designed for joints, bends, and so on.

Boxtype conduits have many variations. Depending on loading conditions, reinforcement may or may not be necessary. Drainage is provided by filling drainage pockets with crushed stone or gravel; these pockets may be installed on either or both sides of the conduit. They conduct water from the top of the conduit to the lower drain, which is connected to a sewer.

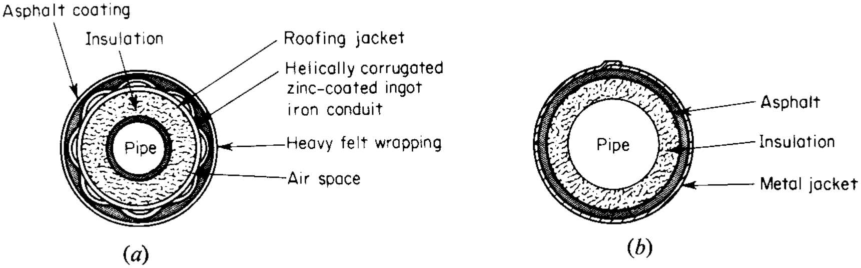

FIGURE C3.12 Prefabricated conduits for underground steam pipes: (*a*) coated and wrapped corrugated conduit; (*b*) poured asphalt protects thermal insulation.

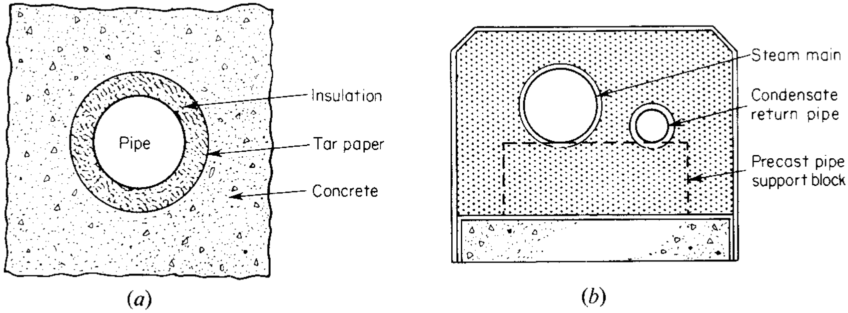
Pipe
Insulation
Tar paper
Concrete
Steam main
Condensate return pipe
Precast pipe support block
(a)
(b)

FIGURE C3.13 Solid-pour protection for underground steam pipe: (*a*) insulated and wrapped pipe in structural concrete; (*b*) pipe is surrounded by insulating concrete.

Solid-pour construction, such as is shown in Fig. C3.13*a*, consists of poured structural concrete which is vibrated or tamped around a conventionally insulated steam line. If the insulation has a high compressive strength, such as is characteristic of diatomaceous earth or silica, it can support the pipe; otherwise, it should be supported independently. Reinforcing is sometimes used to prevent settlement. An eccentric space may be left around the pipe by using insulation larger than the outside diameter of the pipe. This permits the pipe to rise during the warming-up period without crushing the insulation.

The design of Fig. C3.13*b* utilizes an insulating concrete as a conduit. The concrete is poured around the steam pipe, which is supported on precast blocks of the same material. The insulating concrete may consist of any mixture of insulation or other cellular materials and portland cement or a mixture of a special foaming material mixed with portland cement; the aim is to create a cellular mass composed of minute air cells in the concrete so as to develop insulating qualities. The piping (which could be a number of pipes) is wrapped with corrugated paper before the insulation is poured, and a heavy-asphalt-coated waterproofing membrane, or equivalent waterproof sheeting, is installed to protect the top and side of the structure before backfilling.

Granular-fused types of conduits as shown in Fig. C3.14 consist of a granular

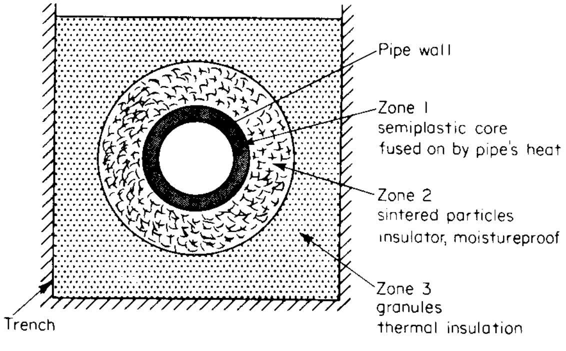
Pipe wall
Zone 1
semiplastic core
fused on by pipe's heat
Zone 2
sintered particles
insulator, moistureproof
Zone 3
granules
thermal insulation
Trench

FIGURE C3.14 Granular-fused conduit for underground steam pipe.

bitumen, selected for the required temperature range and poured and tamped around the pipe or pipes in a trench. Heat passing through the pipe forms three concentric zones: (1) a dense semiplastic core fused on by the pipe's own heat, (2) a sintered zone providing thermal insulation and moisture proofness, and (3) an outer layer of granules providing a final zone of thermal insulation and the load-bearing portion of the structure.

Walk-through tunnels are usually not provided for steam mains unless they are required for underground passage between buildings, as in institutions, and then, they are usually constructed to accommodate other utilities services such as electricity, water, and gas. Tunnels are very costly and are constructed only out of necessity.

Provision for condensate drainage, ventilation, and insulating methods to reduce heat loss are considered for all portions of underground steam mains.

The illustrations shown here are only a few of the many designs utilized in practice today. Choice and application depend upon the project design requirements and site conditions. In the economic evaluation, factors to be considered include life expectancy, operation and maintenance costs, impact of geotechnical conditions on foundations, external and internal drainage, corrosive action of soil conditions, loads to be imposed, field installation practices, and necessary insulating properties.

Drainage of Condensate. To prevent a water slug type of water hammer and a possible rupture of the steam main, condensed steam or condensate within the steam main must be removed. Even superheated steam lines need drainage since condensation forms during the warming-up period, or while the line is hot but without flow. The points to be drained are the low points in the line, moisture separators, drip pockets, and valves, especially in vertical lines. Horizontal portions of the steam lines should be pitched downward approximately ⅛ in/ft (10 mm/m) in the direction of flow or ¼ in/ft (20 mm/m) for lines that contain a steam/water mixture or require draining periodically. Condensate flow against the steam should be avoided if possible.

Since the contour of the ground or subsurface structures will dictate the pitch of the steam main, provisions must be made during construction to grade the steam main carefully so as to pitch the pipe adequate for condensate drainage. Since it is unlikely that a continuous slope can be maintained in a long run of main, removal of condensate (drainage) must be provided for at all low points where a water pocket will exist. In any event, recommended lengths of steam main for draining off condensate should not exceed 300 to 400 ft (90 to 120 m).

To provide for condensate drainage from a steam main, a drain pocket is welded to the bottom of the pipe to be drained. The diameter of the pocket should be about one-third the diameter of the line, up to a maximum of NPS 6 (DN 150) for NPS 18 (DN 450) and larger mains. The pocket not only provides for condensate removal but also allows for sediment removal. Figure C3.15 shows this design. Figure C3.16 is a design in the form of a separator, which is more prevalent in underground steam mains.

For systems which supply high flow rates to concentrated loads, it probably will be economical to return the cond-

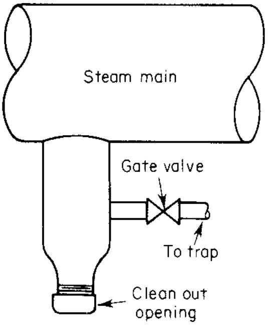

FIGURE C3.15 Drain pocket for steam-trap connection to low-velocity steam main.

ensate in order to recover the energy in the condensate and thereby reduce the costs of treating raw makeup water.

Sometimes, however, it is not economically feasible or practical to return the condensate from district-heating systems because of the high cost of installing and maintaining pumping equipment, manholes, and return piping.

In such cases, traps off the drain pocket can often be discharged through cooling coils to the city sewer system. City regulations may require the condensate discharge to be cooled before entering the sewer. In some cases, condensate discharge lines are piped to sump pits in manholes, where the water is removed by float-controlled electric pumps which discharge it into the sewer. See Figs. C3.17 and C3.18.

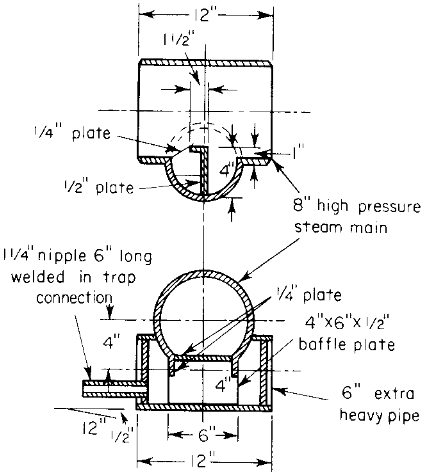
12"
1 1/2"
1/4" plate
1"
4"
1/2" plate
8" high pressure steam main
1 1/4" nipple 6" long welded in trap connection
1/4" plate
4"x6"x1/2" baffle plate
4"
4"
6" extra heavy pipe
12"
1/2"
6"
12"

FIGURE C3.16 Drain pocket for steam-trap connection to high-velocity steam main.

In process and power system piping, condensate removal is an important consideration to prevent water slug formation in steam lines. Paragraph 122.11 of ASME B31.1[2] contains the following provisions for drains, drips, and steam traps:

> Drip lines from piping or equipment operating at different pressures shall not be connected to discharge through the same trap. If two or more traps discharge into the same header which is, or may be, under pressure, a stop valve and a check valve shall be provided in the discharge line from each trap.

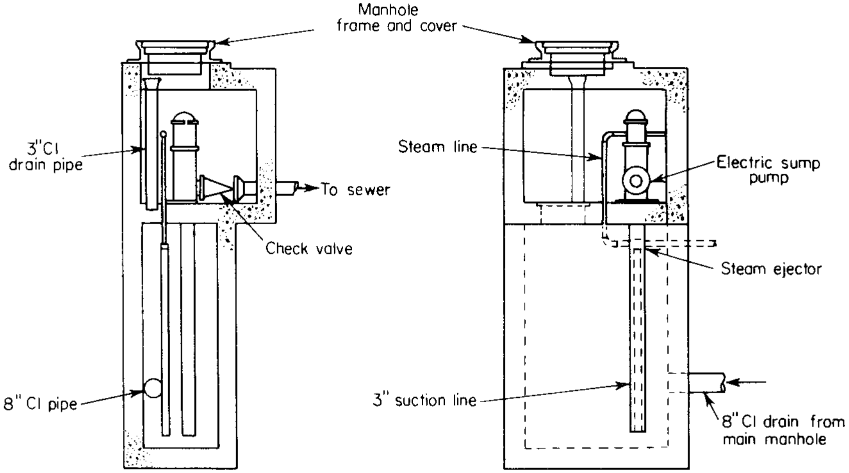
Manhole frame and cover
3"CI drain pipe
To sewer
Check valve
8" CI pipe
Steam line
Electric sump pump
Steam ejector
3" suction line
8" CI drain from main manhole

FIGURE C3.17 Manhole for sump pump.

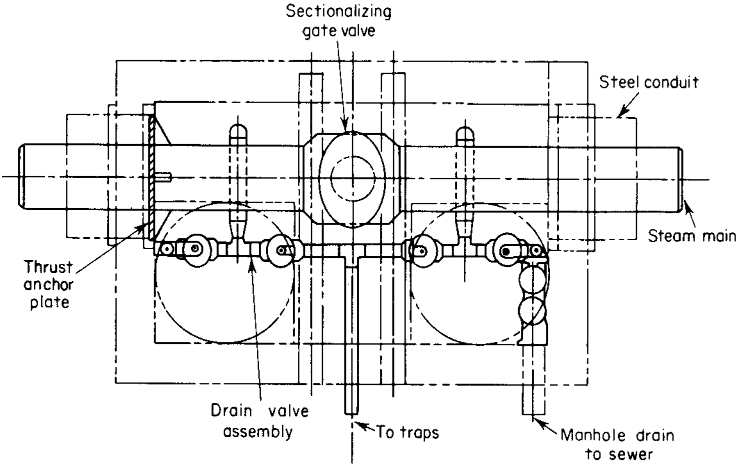
Sectionalizing gate valve
Steel conduit
Steam main
Thrust anchor plate
Drain valve assembly
To traps
Manhole drain to sewer

Plan

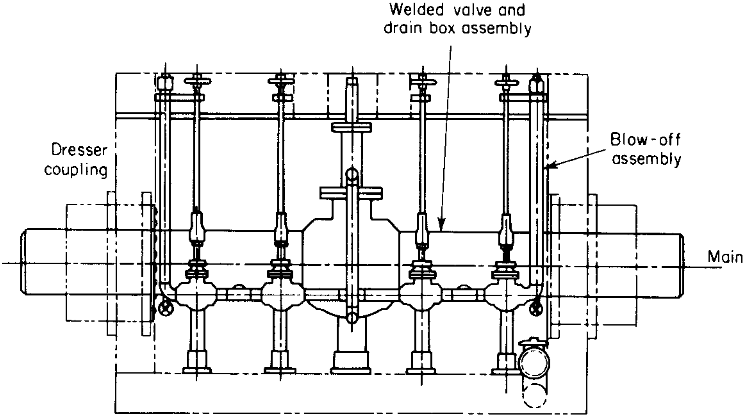
Welded valve and drain box assembly
Dresser coupling
Blow-off assembly
Main

Elevation

FIGURE C3.18 Manhole for sectionalizing valve and drain valve assembly.

Trap discharge piping shall be designed for the same pressure as the inlet piping unless the discharge is vented to atmosphere, or is operated under low pressure and has no stop valves. In no case shall the design pressure of trap discharge piping be less than the maximum discharge pressure to which it may be subjected.

Steam traps are automatic devices used to trap or hold steam until it has condensed and to allow condensate and air to pass as soon as they accumulate. In general, a trap consists of a vessel in which the condensate accumulates, an orifice through which the condensate is discharged, a valve to close the orifice port, mechanisms to operate the valve, and inlet and outlet openings for the entrance and

TABLE C3.6 Reasonable Design Velocities for Flow of Fluids in Pipes

Fluid	Pressure, psig	Use	Reasonable velocity Ft/minute	Ft/second
Water	25–40	City water	120–300	2–5
Water	50–150	General service	300–600	5–10
Water	150 up	Boiler feed	600–1,200	10–20
Saturated steam	0–15	Heating	4,000–6,000	67–100
Saturated steam	50 up	Miscellaneous	6,000–10,000	100–167
Superheated steam	200 up	Large turbine and boiler leads	10,000–20,000	167–334

Source: Courtesy of Stone & Webster.

discharge of the condensate from the trap vessel. Steam traps are discussed in detail in Chap. A2.

Determining Reasonable Flow Velocity. Before proceeding beyond a preliminary layout of piping systems, it is necessary to determine pipe sizes which allow reasonable velocities and friction losses. The maximum allowable velocity of the fluid in a pipeline is that which corresponds to the permissible pressure drop from the point of supply to the point of consumption or is that which does not result in excessive pipeline erosion. The economic optimization of line sizes is discussed in Chap. B8 in this handbook. The values of velocity listed in Tables C3.6 and C3.6M (Metric) are reasonable for use in such cases. The lower velocities should be used for small pipes, and the upper limits for large ones. These values represent good average practice and may be used as a guide in many cases where actual pressure drops are not computed. Additional steam line velocity information is given in Chap. B8 in this handbook.

Erosive action on valve seats and similar exposed parts also affects permissible velocity. This action is much more pronounced in the case of wet steam than with superheated steam, and velocities should be correspondingly lower when there is much moisture in the steam.

High velocities are sometimes used in dry steam lines where excess pressure exists, to absorb the higher pressure drop. The high velocity is not in itself objection-

TABLE C3.6M (Metric) Reasonable Design Velocities for Flow of Fluids in Pipes

Fluid	Pressure (kPa gauge)	Use	Reasonable velocity m per minute	m per second
Water	172–276	City water	36–91	0.61–1.52
Water	345–1034	General use	91–183	1.52–3.05
Water	1034 up	Boiler feed	183–366	3.05–6.10
Saturated steam	1–103	Heating	1220–1830	20.4–30.5
Saturated steam	345 up	Miscellaneous	1830–3050	30.5–50.9
Superheated steam	1380 up	Large turbine and boiler leads	3050–4570	50.9–76.2

Source: Courtesy of Stone & Webster.

able, since with dry steam there is no appreciable erosion of the pipe walls and no undesirable effects save that high velocities are accompanied by considerable noise (which would be objectionable in heating systems in office buildings and dwellings but may not be in power plants).

In the selection of pipe sizes for exhaust lines from auxiliary turbines and similar services where high velocities may be used to advantage, consideration should be given to the limiting velocities which can be obtained. This limiting or sonic velocity has a definite value for each combination of steam density and pressure (see Chap. B8).

It is often cheaper to use a larger standard pipe size than to use a unique pipe size. Table C3.4 shows a special size for main steam piping and standard sizes recommended for the other systems. Where space is at a premium, it may be necessary to use a smaller size than would otherwise be good practice. The calculation of velocity or pressure drop is a valuable check, but in the last analysis judgment is the deciding factor, and the blind use of generalized criteria is impracticable.

Special attention should be given to sizing hot and cold reheat piping since pressure drop in reheat systems affects turbine heat rate. Cost of piping must be compared with these effects to arrive at the most economical piping arrangement. Normally, total pressure drop in reheat piping and the reheating section of the steam generator should be 7 to 9 percent of high-pressure turbine exhaust pressure. It is desirable to use a smaller-diameter hot reheat line and larger-diameter cold reheat line, taking a greater pressure drop in the more expensive (alloy) hot reheat line.

Loss Due to Steam Leaks. Modern power plants with almost all welded joints experience leakage through only a few nonwelded joints at valves or other equipment connections. The hazard of high-pressure, high-temperature steam leaks, together with the cost of chemicals required in most makeup systems, makes early repairs mandatory.

Existing low-pressure plants using flanged or screwed joints experience considerable leakage and where maintenance is deferred are wasting both water and energy at a rate which depends on the size of the opening and steam pressure.

The value of steam which can be lost through a comparatively small leak becomes appreciable when considered over a period of time. The amounts of steam which will escape through various sizes of orifices at different pressures can be computed by an appropriate flow formula. Table C3.7, which was computed by Grashof's formula,[24] gives the pounds of steam and gallons of water wasted per month, while Table C3.7M (Metric) gives the kg of steam and m^3 of water wasted per month.

Expansion, Flexibility, and Supporting. Chapters B4 and B5 in this handbook provide basic information on the thermal expansion, the needed flexibility, and the supporting of piping systems. In underground steam piping, expansion joint fittings are more commonly used for thermal expansion owing to the limitations of space and costly trenching. Expansion joints are often used for application in underground steam mains.

The basic design of a *slip-type joint* consists of a cast-iron or steel body with a stuffing box and a sliding sleeve. The advantage of slip-type joints is the longer traverses that can be obtained to absorb pipe expansion; the disadvantage is the necessity for maintaining packing. By the very nature of its construction, the slip joint is capable of absorbing only axial movement.

The *metallic bellows expansion joint* is composed of the following components: (1) the flexible element proper (corrugated metal tube), the rings enabling reinforced

TABLE C3.7 Loss Due to Steam Leaks*

Size of orifice, in	Pounds steam wasted per month	Water wasted, gal
250-lb gauge		
½	1,780,000	213,600
⅜	1,001,000	120,100
¼	445,000	53,400
⅛	111,000	13,300
1⁄16	27,800	3,300
1⁄32	7,000	800
300-lb gauge		
½	2,125,000	255,000
⅜	1,195,000	143,400
¼	531,000	63,700
⅛	132,800	15,900
1⁄16	33,200	4,000
1⁄32	8,300	1,000
400-lb gauge		
½	2,804,000	336,500
⅜	1,577.000	189,200
¼	701.000	84,100
⅛	175,200	21,000
1⁄16	43,800	5,300
1⁄32	11,000	1,300
600-lb gauge		
½	4,157,000	498,800
⅜	2,338,000	280,600
¼	1,039,000	124,700
⅛	259,000	31,200
1⁄16	65,000	7,800
1⁄32	16,300	2,000

* Values in the table are based on the use of Grashof's formula.

elements to support higher pressures, and the end collars or other structures serving to increase pressure capacity of cylindrical ends and transfer spring force and hydrostatic end thrust to connected piping, and (2) the end nipples or flanges and, for other than anchored axial joints, the various hardware items used to cross-connect the ends, such as tie rods, hinges, and gimbals.

The advantages of the bellows type of joint which permit its use in buried steam piping are that it requires no maintenance and can absorb a combination of axial, lateral, and angular movement within a large range of pressures and temperatures. Its disadvantage is the limitation of traverse, generally 7 to 8 in (180 to 200 mm) of axial movement.

Adequate anchoring and guiding are essential for the proper functioning of all expansion joints. Main anchors for end thrusts must be designed for the sum of the pressure thrust, the force required to deflect the joint, and the force due to friction in the piping guides. Intermediate anchors are used between balanced or double-type joints where the pressure thrust is balanced and the anchor need be designed only to restrict the expansion movement of the pipe. Guides are essential

TABLE C3.7M (Metric) Loss Due to Steam Leaks*

Size of orifice (mm)	Steam wasted per month (kg)	Water wasted (m^3)
1,724 kPa gauge		
12.70	807,000	808.6
9.52	454,000	454.6
6.35	201,800	202.1
3.18	50,300	50.3
1.59	12,600	12.5
0.79	3,200	3.0
2,068 kP gauge		
12.70	936,900	965.3
9.52	542,000	542.8
6.35	240,900	241.1
3.18	60,200	60.2
1.59	15,100	15.1
0.79	3,800	3.8
2,758 kPa gauge		
12.70	1,271,900	1,273.8
9.52	715,300	716.2
6.35	318,000	318.4
3.18	79,500	79.5
1.59	19,900	20.1
0.79	5,000	4.9
4,137 kP gauge		
12.70	1,885,600	1,888.2
9.52	1,060,500	1,062.2
6.35	471,300	472.0
3.18	117,500	118.1
1.59	29,500	29.5
0.79	7,400	7.6

* Values in the table are based on the use of Grashof's formula.

to assure proper pipe alignment into the expansion joint so that undesirable torques are not imposed on the expansion element.

Cold springing of expansion joints used only for lateral deflection can provide several advantages. The most significant of these is the optimization of the position of the expansion joint. In addition, the joint is more stable at high pressures, since the maximum angular displacement of the corrugations is reduced. Joints with internal sleeves and external covers must have adequate clearance to permit the lateral deflection of the expansion element. If the deflection can be reduced by 50 percent, these clearances can also be reduced by 50 percent. Internal sleeves can then be of maximum diameter, and external sleeves are held to a minimum diameter.

All piping systems expand with an increase in temperature in the system. Long runs of high-temperature piping generally use bends, fittings, and offsets to assist in keeping the stresses within the code's allowable values, and reactions (forces and moments) on the turbine or boiler connections within the manufacturer's allowable values. Rigid hangers, constant and variable support hangers, guides, and anchors are also useful to control the thermal growth but must be carefully engineered.

For piping such as main steam and hot reheat systems operating in the creep range [900°F (482°C) and above], cold springing may prove useful in controlling the reactions on the equipment within the manufacturer's specified limits, although this technique is not universally recommended. (Cold springing is the process of cutting short the piping by a certain percentage of the expected thermal growth so that equipment loading in the cold, erected position is that percentage of the calculated hot reactions from the thermal analysis.) Cold springing does not reduce the stresses in the piping as allowed by the Code, but may be useful in meeting the vendors' limits on allowable forces and moments on their equipment, provided that the piping does not creep significantly at operating temperature. As the piping heats up and cycles through a number of thermal cycles in the creep range, the cold reactions will gradually be self-relieved to a certain extent. See ASME B31.1 Code,[2] Paragraphs 119.9 and 119.10 or ASME Section III,[1] Paragraphs NC-3673.3 and NC-3673.5 for a more complete discussion of this subject.

The piping designer needs to work closely with the vendors of the equipment in laying out the high-temperature piping and support systems, in conjunction with the flexibility analyst, so that these systems will meet all requirements over the life of the plant. Especially critical are the loads imposed on rotating equipment such as steam turbines, since clearances are critical and distortion due to piping loads can cause real problems to this equipment.

The true economics of the system design must include all the above factors plus the normal cost factors (piping, insulation, hangers, etc.).

Fabrication, Assembly, and Erection. For underground steam piping, manholes are required for sectionalizing valves and bypass valve piping, trap piping and traps, some types of expansion joints, and convenience of location of other expansion joints and anchorage. Modern manholes are constructed of reinforced concrete, cast-iron, or steel. In field-pour concrete construction, waterproofness should be assured by pouring the walls and floor monolithically. Prefabricated enclosures are pretested for waterproofness before installation. Other provisions that should be considered in manhole design are (1) adequate working space for maintenance, (2) clearance for removal of equipment, (3) ventilation, and (4) drainage. If the manhole floor elevation is below the sewer or if a sewer is not accessible for drainage piping from the manhole, sump pump manholes with automatic pumps or water ejectors must be provided. An example of such an installation is shown in Fig. C3.17. In prefabricated steam-main construction, prefabricated manholes with the necessary valves and piping installed may be delivered to the job site as a unit. This type of manhole is shown in Fig. C3.18.

With prefabricated installation, expansion joints of the bellows design may be delivered to the job site and welded into the steel piping and conduit of the steam main. This provides for directly buried expansion joints in a fully-encapsulated system. Where convenient or necessary, expansion joints are installed in manholes with sectionalizing valves and thrust-type anchors. For ease of maintenance, traps are usually installed in their own manholes; that is, in a manhole separate from that which houses the sectionalizing valve.

Steam piping in power plants is fabricated and installed in accordance with the appropriate code. The following discussion highlights several of the requirements for ASME Class 2 piping,[1] but specific codes should be reviewed as applicable. Components, parts, and appurtenances shall be fabricated and installed in accordance with the rules in the code and shall be manufactured from materials which meet the requirements of the code.

Material for pressure-retaining parts shall carry identification markings which will remain distinguishable until the component is assembled or installed. If the original identification markings are cut off or the material is divided, either the marks shall be transferred to the parts cut, or a coded marking shall be used to ensure identification of each piece of material during subsequent fabrication or installation. In either case, an as-built sketch or a tabulation of materials shall be made identifying each piece of material with the Certified Material Test Report, where applicable, and the coded marking. For studs, bolts, nuts, and heat exchanger tubes, it is permissible to identify the Certified Material Test Reports for material in each component in lieu of identifying each piece of material with the Certified Material Test Report and the coded marking. Material supplied with a Certificate of Compliance and welding and brazing materials shall be identified and controlled so that they can be traced to each component or installation of a piping system, or else a control procedure shall be employed which ensures that the specified materials are used.

Material originally accepted on delivery in which defects exceeding the limits of acceptance are known or discovered during the process of fabrication or installation, is unacceptable. However, the material may be used, provided the condition is corrected in accordance with the requirements for the applicable product form.

Materials may be cut to shape and size by mechanical means such as machining, shearing, chipping, or grinding, or by thermal cutting. When thermal cutting is performed to prepare weld joints or edges to remove attachments or defective material, or for any other purpose, consideration shall be given to preheating the material, using preheat schedules such as suggested in the code.

Any process may be used to hot- or cold-form or bend pressure-retaining materials, including weld metal, provided the impact properties of the materials, when required, are not reduced below the minimum specified values, or they are effectively restored by heat treatment following the forming operation. *Hot-forming* is defined as forming with the material temperature higher than 100°F (38°C) below the lower critical temperature of the material.

When impact testing is required by the design specifications, a procedure qualification test shall be conducted using specimens taken from materials of the same specification, grade or class, heat treatment, and with similar impact properties as required for the material in the component. These specimens shall be subjected to the equivalent forming or bending process and heat treatment as the material in the component. Applicable tests shall be conducted to determine that the required impact properties of the code are met after straining.

The tolerance requirements for formed or bent piping include maintaining minimum wall thickness and ovality. Bending processes shall be selected and qualified to ensure a wall thickness for bent piping sufficient to satisfy the requirements of the design calculations at the resultant section thickness. Unless otherwise justified by the design calculations, the ovality of piping after bending shall not exceed 8 percent as noted in Eq. (C3.6):

$$100 \times \frac{D_{\max} - D_{\min}}{D_o} \leq 0.08 \tag{C3.6}$$

where D_o = the nominal pipe outside diameter, in (mm)
$D_{\min}$ = the minimum outside diameter after bending or forming, in (mm)
$D_{\max}$ = the maximum outside diameter after bending or forming, in (mm)

Parts that are to be joined by welding may be fitted, aligned, and retained in position during the welding operation by the use of bars, jacks, clamps, tack welds, or temporary attachments. When the inside surfaces of items are inaccessible for welding or fairing, alignment of sections shall meet the following requirements:

> For circumferential joints the inside diameters shall match each other within 1⁄16 in (1.5 mm). When the items are aligned concentrically, a uniform mismatch of 1⁄32 in (0.8 mm) all around the joint can result. However, other variables not associated with the diameter of the item often result in alignments that are offset rather than concentric. In these cases, the maximum misalignment at any one point around the joint shall not exceed 3⁄32 in (2.4 mm). Should tolerances on diameter, wall thickness, out-of-roundness, and so on, result in inside diameter variation which does not meet these limits, the inside diameters shall be counterbored, sized, or ground to produce a bore within these limits. Offset of outside surfaces shall be faired to at least a 3:1 taper over the width of the finished weld or, if necessary, by adding additional weld metal.
>
> For longitudinal joints the misalignment of inside surfaces shall not exceed 3⁄32 in (2.4 mm), and the offset of outside surfaces shall be faired to at least a 3:1 taper over the width of the finished weld or, if necessary, by adding additional weld metal.

No welding shall be undertaken until after the welding procedures which are to be used have been qualified. Only welders and welding operators who are qualified in accordance with code requirements shall be used. All welding procedure qualification tests shall be in accordance with the requirements of the code.

The method used to prepare the base metal shall leave the weld preparation with reasonably smooth surfaces. The surfaces for welding shall be free of scale, rust, oil, grease, and other deleterious material. The work shall be protected from deleterious contamination and from rain, snow, and wind during welding. Welding shall not be performed on wet surfaces. Rules for making welded joints in piping are described in the following paragraphs.

Backing rings which remain in place may be used for piping in accordance with the requirements of the code. The materials for backing rings shall be compatible with the base metal, but spacer pins shall not be incorporated into the weld.

In double-welded joints, before applying weld metal on the second side to be welded, the root of full penetration double-welded joints shall be prepared by suitable methods such as chipping, grinding, or thermal gouging, except for those processes of welding by which proper fusion and penetrations are otherwise obtained and demonstrated to be satisfactory by welding procedure qualifications.

Where single-welded joints are used, particular care shall be taken in aligning and separating the components to be jointed so that there will be complete penetration and fusion at the bottom of the joint for its full length.

When components of different diameters are welded together, there shall be a gradual transition between the two surfaces. The slope of the transition shall be such that the length-offset ratio shall not be less than 3:1, unless greater slopes are shown to be acceptable by analysis. The length of the transition may include the weld.

Thickness of weld reinforcements for piping is specified in Table C3.8. For double-welded butt joints the limitation on the reinforcement given in Column 1 of the table shall apply separately to both inside and outside surfaces of the joint. For single-welded butt joints, the reinforcement given in Column 2 shall apply to the inside surface and the reinforcement given in Column 1 shall apply to the outside surface. The reinforcements shall be determined from the higher of the abutting surfaces involved.

Fillet welds may vary from convex to concave. A fillet weld in any single continu-

TABLE C3.8 Thickness of Weld Reinforcements for Piping[1]

Material nominal thickness in (mm)	Column 1: Both double-welded butt joints and outside single-welded butt joints	Column 2: Inside single-welded butt joints
Up to ½ (3.2), incl.	³⁄₃₂ (2.4)	³⁄₃₂ (2.4)
Over ⅛–³⁄₁₆ (3.2–4.8), incl.	⅛ (3.2)	³⁄₃₂ (2.4)
Over ³⁄₁₆–½ (4.8–12.7), incl.	⁵⁄₃₂ (4.0)	⅛ (3.2)
Over ½–1 (12.7–25.4), incl.	³⁄₁₆ (4.8)	⁵⁄₃₂ (4.0)
Over 1–2 (25.4–51), incl.	¼ (6.4)	⁵⁄₃₂ (4.0)
Over 2 (51)	The greater of ¼ in (6.4 mm) or ⅛ times the width of the weld in inches (mm)	⁵⁄₃₂ (4.0)

ous weld may be less than the specified fillet weld dimension by not more than ¹⁄₁₆ in (1.5 mm), provided that the total undersize portion of the weld does not exceed 10 percent of the length of the weld. Individual undersize weld portions shall not exceed 2 in (52 mm) in length. In making socket welds, a gap of approximately ¹⁄₁₆ in (1.5 mm) at the end of the pipe shall be provided prior to welding. The gap need not be present nor be verified after welding.

Structural attachments shall conform reasonably to the curvature of the surface to which they are attached. Full penetration, fillet, or partial penetration continuous or intermittent welds are acceptable, depending on service conditions.

Attachments may be welded to the piping system after performance of the pressure test provided the welds do not require postweld heat treatment (PWHT); welds shall be restricted to fillet welds not exceeding ⅜ in (9.5 mm) throat thickness and to full penetration welds attaching materials not exceeding ½ in (12.7 mm) in thickness; welds shall not exceed a total length of 24 in (60 cm) for fillet welds or 12 in (30 cm) for full penetration welds; and welds shall be examined as required by the code.

The need for and temperature of preheat are dependent on factors such as the chemical analysis, degree of restraint of the parts being joined, elevated temperature, physical properties, and material thicknesses. Postweld heat treatment must provide the required heating and cooling rates, metal temperature, metal temperature uniformity, and temperature control.

The threads of all bolts or studs shall be engaged in accordance with the design. Any lubricant or compound used in threaded joints shall be suitable for the service conditions. All threading lubricants or compounds shall be removed from surfaces which are to be seal-welded. In bolting gasketed flanged joints, the contact faces of the flanges shall bear uniformly on the gasket in accordance with the design principles applicable to the type of gasket used. All flanged joints shall be made up with uniform bolt stress.

Examination, Inspection, and Testing. The inside of all pipes, valves, fittings, traps, and other apparatus shall be smooth, clean, and free from all blisters, loose mill scale, sand, and dirt when erected. All main steam lines and significant branch lines shall be steam-blown before placing in service.

Steam piping in power plants must be examined, inspected, and tested in accordance with the appropriate code. The following discussion summarizes several general requirements for ASME Class 2 piping,[1] but specific codes should be reviewed as applicable.

The examinations required by the code shall be performed by personnel who have been qualified as required by code, and results of the examinations shall be evaluated in accordance with the specified acceptance standards.

Following any nondestructive examination in which examination materials are applied to the piece, the piece shall be thoroughly cleaned in accordance with applicable materials or procedure specifications.

Acceptance examinations of welds and weld metal cladding shall be performed at the following stipulated times during fabrication and installation.

1. Radiographic examination of welds will usually be performed after an intermediate or final PWHT, when required.
2. Magnetic particle or liquid penetrant examinations of welds shall be performed after any required PWHT, except that welds in P-No. 1 materials may be examined either before or after PWHT.
3. All dissimilar metal weld joints such as in austenitic or high nickel to ferritic material or using austenitic or high nickel alloy filler metal to join ferritic materials which penetrate the wall shall be examined after final PWHT.
4. The magnetic particle or liquid penetrant examination of weld surfaces that are to be covered with weld metal cladding shall be performed before the weld metal cladding is deposited. The magnetic particle or liquid penetrant examination of weld surfaces that are not accessible after a PWHT shall be performed prior to the operation which caused this inaccessibility. These examinations may be performed before PWHT.
5. Ultrasonic examination of electroslag welds in ferritic materials shall be performed after a grain refining heat treatment, when performed, or after final PWHT.

The codes provide specific acceptance standards for radiographic, ultrasonic, magnetic particle, liquid penetrant, and metallographic examination of all components. Unique examination requirements are usually specified for bellows expansion joints.

Pressure Testing. Before installation, all valves, fittings, and so forth shall be capable of withstanding an appropriate hydrostatic shell test, and piping shall be capable of meeting the hydrostatic test requirements contained in the respective material specifications under which it was purchased. All pressure-retaining components, appurtenances, and completed systems shall be pressure tested. Bolts, studs, nuts, washers, and gaskets are exempted from the pressure test. Pressure testing required by the applicable code often must be performed in the presence of the inspector.

After installation, the complete system shall be hydrostatically tested as noted in Table C3.9. When conducting pressure tests at low metal temperatures, the possibility of brittle fracture shall be considered. At no time during the hydrostatic test shall test pressure exceed the maximum allowable test pressure of any nonisolated components, such as vessels, pumps, or valves. Nor shall any of the maximum allowable stress limits be exceeded for any components being tested.

Following the application of the hydrostatic test pressure for the required time, all joints, connections, and regions of high stress (such as regions around openings and thickness transition sections) shall be examined for leakage, except in the case of pumps and valves, which shall be examined while at test pressure. The piping

TABLE C3.9 Selected Hydrostatic Test Pressure and Allowable Limits[1,2]

Code class and category of component	Hydro test pressure as a multiple of the design pressure (DP)	Maximum allowable stress at test temperature, circumferential (hoop) stress, if not noted otherwise
ASME Class 1		
Vessels	1.25 times DP	Note 1
Piping	1.25 times DP	Note 1
Equipment	1.5 times DP	Note 1
Valves	Per NB-3531[1]	Per NB-3531[1]
Relief valves	1.5 × set pressure	Per NB-3531[1]
ASME Class 2 and 3		
Vessels	1.25 times DP	Note 2
Piping	1.25 × DP, Note 3	Note 2
Equipment	1.5 times DP	Note 2
Valves	Per NC/ND-3500[1]	Per NC/ND-3500[1]
ASME B31.1		
System	1.5 times DP	90% of yield strength, Note 4
Piping	1.5 times DP	90% of yield strength, Note 4
Equipment	Note 5	Note 5
Valves	Note 5	Note 5

Notes:

1. Primary membrane stress intensity less than 90% of tabulated yield strength at test temperature and other limits in NB-3226.[1]
2. Primary membrane stress intensity less than 90% of tabulated yield strength at test temperature and other limits in NC-3218.[1]
3. As an alternative, piping between the discharge side of a centrifugal pump and the first shutoff valve may be hydrostatically tested at the shutoff head of the pump (NC/ND-6221[2]).
4. In addition, the sum of longitudinal stresses due to test pressure and live and dead loads at the time of test, excluding occasional loads, shall not exceed 90% of the yield strength at test temperature (Para. 102.3.3[2]).
5. Hydrostatic test pressure shall not exceed the maximum allowable test pressure of any nonisolated components, such as vessels, pumps, or valves.

system, exclusive of possible localized instances at pump or valve packing, shall show no visual evidence of weeping or leaking. Leakage of temporary gaskets and seals, installed for the purpose of conducting the hydrostatic test, and which will be replaced later, may be permitted unless the leakage exceeds the capacity to maintain system test pressure for the required amount of time. Other leaks, such as from permanent seals, seats, and gasketed joints in components, may be permitted when specifically allowed by the design specifications.

The component or system in which the test is to be conducted shall be vented during the filling operation to minimize air pocketing. Water or an alternative liquid, as permitted by the design specification, shall be used for the hydrostatic test. It is recommended that the test be made at a temperature that will minimize the possibility of brittle fracture. The test pressure shall not be applied until the component, appurtenance, or system and the pressurizing fluid are at approximately the same temperature.

The pressure test may be performed progressively on erected portions of the system. Components and appurtenances shall be pressure-tested prior to installation in a system except that the system pressure test may be substituted for a component or appurtenance pressure test provided the following is true: The component can be repaired by welding, if required, as a result of the system pressure test; the component repair weld can be postweld heat-treated, if required, and nondestructively examined, as applicable; and the component is resubjected to the required system pressure test following the completion of repair and examination if the repair is required to be radiographed. Valves also require pressure testing prior to installation in a system.

All joints, including welded joints, shall be left uninsulated and exposed for examination during the test. Components designed to contain vapor or gas may be provided with additional temporary supports, if necessary, to support the weight of the test liquid. Expansion joints shall be provided with temporary restraints, if required, for the additional pressure load under test. Equipment that is not to be subjected to the pressure test shall be either disconnected from the component or system or isolated during the test by a blind flange or similar means. Valves may be used if the valves with their closures are suitable for the proposed test pressure. Flanged joints at which blanks are inserted to isolate other equipment during the test need not be retested. If a pressure test is to be maintained for a period of time and the test medium in the system is subject to thermal expansion, precautions shall be taken to avoid excessive pressure. The test equipment shall be examined before pressure is applied to ensure that it is tight and that all low-pressure filling lines and other items that should not be subjected to the test have been disconnected or isolated.

The hydrostatic test requirements for bellows expansion joints require that the completed expansion joint shall be subjected to a hydrostatic test in accordance with the applicable code. This test may be performed with the bellows fixed in the straight position, at its neutral length, or in some cases, this test shall be performed with the bellows fixed at the maximum design rotation angle or offset movement.

Pressure test gauges used in pressure testing shall be indicating pressure gauges and shall be connected directly to the component. If the indicating gauge is not readily visible to the operator controlling the pressure applied, an additional indicating gauge shall be provided where it will be visible to the operator throughout the duration of the test. For systems with a large volumetric content, it is recommended that a recording gauge be used in addition to the indicating gauge. All test gauges shall be calibrated against a standard dead-weight tester or a calibrated master gauge. The test gauges shall be calibrated before each test or series of tests.

When hydrostatic testing is impractical, it shall be required that the piping be tested with steam at a pressure at least equal to the pressure at which the piping is to be operated. These tests shall be made on sections, or on the whole of the piping system, but the connections between the sections must be similarly tested.

Special Design Criteria

Overpressure Protection. Overpressure protection of the components in a steam system shall be provided as an integrated system using pressure-relief devices and associated pressure-sensing elements. Detail requirements for overpressure protection for ASME Class 1, 2, and 3 systems are provided in Articles NB-7000, NC-7000, and ND-7000,[1] respectively.

Each main steam lead generally has safety valves at the superheater outlet and often a motor-operated block valve which is used for isolation. A main steam stop valve at the boiler outlet facilitates boiler hydro testing prior to completion of turbine erection; whether to provide it is a matter of economics. In the case of two leads, the cross-connection between the two main steam leads shall permit full-closed testing of one turbine stop valve at a time while the turbine is operating.

The cross-connection line may have connections to the steam-generator feed pump turbines, auxiliary steam loads, turbine-generator gland seal system, and the steam-generator restart system, depending on system design requirements.

Protecting District Heating and Steam Distribution Systems. Construction of underground steam mains must adhere to the requirements as provided for in Section 122.14 of ASME B31.1[2] when the piping is within the jurisdiction of ASME B31.1. Where pressure-reducing valves are used, one or more relief devices or safety valves are provided on the low-pressure side of the system. The relief or safety devices are located as close as practicable to the reducing valve. The combined relieving capacity provided must be such that the design pressure of the low-pressure system will not be exceeded if the reducing valve fails to open.

In district heating and steam distribution systems where the steam pressure does not exceed 400 psi (2760 kPa) and where the use of relief valves as previously described is not feasible, alternative designs may be substituted for the relief devices. For example, this could occur if there is no acceptable discharge location for the vent piping. Two or more steam-pressure-reducing valves capable of independent operation may be installed in series, each set at or below the safe working pressure of the equipment and piping system served. In this case, no relief device is required. A trip-stop steam valve set to close at or below the design pressure of the low-pressure system may be used in place of a second reducing valve or a relief valve.

Design of Restrained Underground Piping. Appendix VII in B31.1[2] provides non-mandatory procedures which may be conservatively applied to the design and analysis of buried piping systems. Buried piping is supported, confined, and restrained continuously by the passive effects of the backfill and the trench bedding. The effects of continuous restraint cannot be easily evaluated by the usual methods applied to exposed piping, since these methods cannot easily accommodate the effects of bearing and friction at the pipe/soil interface. All components in the buried system must be given consideration, including the building penetrations, branches, bends, elbows, flanges, valves, grade penetrations, and tank attachments. Welds should be made in accordance with the B31.1 code, and appropriate corrosion protection procedures for buried piping are to be followed.

Preventing Turbine Overspeed. Turbine water induction problems from main steam lines would normally only occur during start-up or shortly after shutdown, so prevention criteria are limited to low-point drain design per ASME Standard No. TDP-1.[26] Steam storage in the turbine, reheater, and reheat piping presents a problem in turbine speed control because surplus energy can continue to be generated in the IP and the LP sections for some time after the main governor has reacted to a load decrease. This condition could result in dangerous overspeeding. To prevent this, governor-operated intercept valves are installed ahead of the point of reintroduction of the reheated steam to the turbine. The IVs are adjusted to begin closing when the normal speed is exceeded but before turbine speed has increased to the point (approximately 10 percent over normal RPM) where an emergency overspeed trip would shut down the whole unit.

Understanding Reheat Steam Systems

Advantages of Reheat Cycles. The example of power plant cycle efficiency improvement by increased initial steam conditions in ‘‘Design Temperature’’ suggests that maintaining the initial temperature constant over a range of pressures (as in the Carnot Cycle) might also prove fruitful. This would require reheating the main steam to its initial temperature again after each infinitesimal amount of expansion in the turbine. Such a cycle might be said to have an infinite number of reheats.

There is also another important advantage derived from using steam reheat in a power cycle. Reheating is a feature associated with high steam pressures where there is insufficiently high initial steam temperature to yield an expansion that will end with an acceptable moisture content at the condenser pressure. This limit of moisture at the last stage of a turbine is roughly 12 to 14 percent. Moisture in the steam flow causes erosion of turbine buckets, shortening their useful life, and also results in an efficiency loss in the turbine. The purpose of reheat is to take full advantage of higher initial steam parameters discussed in ''Design Temperature'' as they become commercially available.

Reheat Performance Efficiency. The number of reheats to be used must be evaluated. The high-pressure, high-temperature steam generator, together with the extra cost of a turbine, piping, and controls, makes plants with reheat more expensive than those without this feature. Economically, single reheating has proved desirable on most machines above 100 MW. In actual practice the gain from single reheating is about 4 to 7 percent in thermal efficiency over an equivalent nonreheat cycle. The gain in performance which can be realized from a second reheating is smaller than that from the first. For large units operating at 3500 psig (24.2 MPa), the gain in performance due to a second reheat is in the neighborhood of 2 percent of the net heat rate (see Fig. C3.8). Performance gains for additional reheats diminish rapidly, and the justification for greater expenditures for equipment depends strongly upon the price of fuel.

For every set of initial steam conditions there exists an optimum reheat pressure (or pressures in a double-reheat cycle) which yields the maximum efficiency (minimum heat rate) of the power plant. Studies made of the performance and economic application of single-reheat cycles indicate that for a seven (or less) feedwater heater cycle the cold reheat pressure is adjusted by the turbine manufacturer to provide either the optimum or desired final feedwater temperature. If eight (or more) feedwater heaters are used, it proves economical to design the cycle with the first point heater located above the reheat point (HARP extraction). Figure C3.19[27] indicates typical optimum reheat pressures corresponding to 2400 psig/1000°F/1000°F (16.6 MPa/538°C/538°C) steam conditions for units taking extraction for the top heater at the reheat point (curve marked ''Top heater at reheat point'') or above the reheat point where the optimum reheat pressure is found at the low point of a curve corresponding to required final feedwater temperature.

It is seen from this figure that minor deviations from the optimum reheat pressure have a small effect on performance; however, the performance penalties should always be estimated. Size of the turbine, throttle temperature, and reheat temperature have a relatively minor effect on the indicated optimum conditions, and Fig. C3.19 may therefore be considered as reasonably accurate for any single-reheat unit at indicated throttle pressure. However, if more accurate information is needed, it should be obtained from the turbine manufacturer. It should be noted that the relative performance indicated applies only at rated output.

The selection of optimum reheat pressures for a double-reheat turbine is an involved problem. It is affected not only by thermodynamic optimization but also by design limitations (e.g., second-reheat intercept-valve pressure must be fixed at about 300 to 400 psia (2070 to 2760 kPa) at rated conditions due to the very large volumetric steam flows which would result at lower pressures). Figures C3.20 and

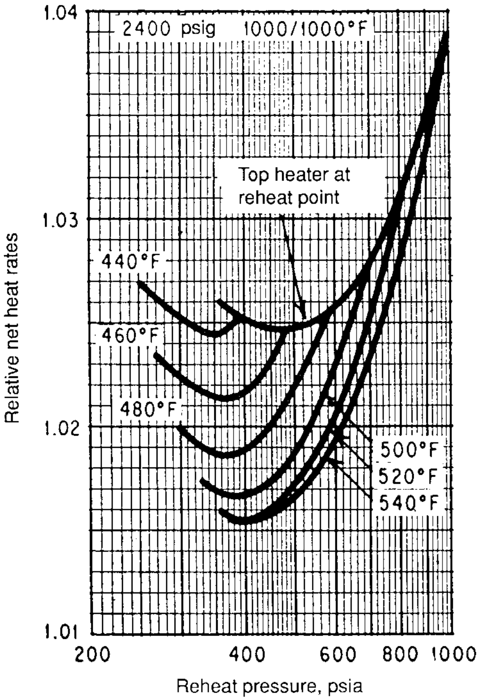

FIGURE C3.19 Relative performance for typical single-reheat units with various combinations of first-reheat intercept-valve pressure and final feedwater temperature.[27] *(Courtesy of General Electric Co.)*

C3.21[27] show the heat rate penalty which results from the use of reheat pressures other than optimum when the throttle pressure is 3500 to 4500 psig (24.2 to 31.1 MPa), respectively, and the second cold reheat pressure is fixed at 300 psia (2070 kPa).

Tables C3.10[28] and C3.10M (Metric) compare the basic cycle parameters for the 738-MW, 3500-psig (24.2-MPa) unit and the 900-MW, 4500-psig (31.1-MPa) design. The relatively higher first reheat pressure of the 4500-psig (31.1-MPa) cycle makes possible an additional attractive thermodynamic gain when an eighth feedwater heater, extracting steam from the first reheat section, is added to the cycle. The use of a heater above the reheat point in the 3500-psig (24.2-MPa) cycle will result in an improvement in the heat rate. In this case the required final feedwater temperature would set the limit on the HARP extraction pressure.

Understanding the Extraction Steam System

Regenerative feedwater heating improves the Rankine cycle efficiency. It is achieved by withdrawing a portion of steam flowing through the turbine at a number of points along the flow path (extraction, bleeding). The steam so extracted is condensed in

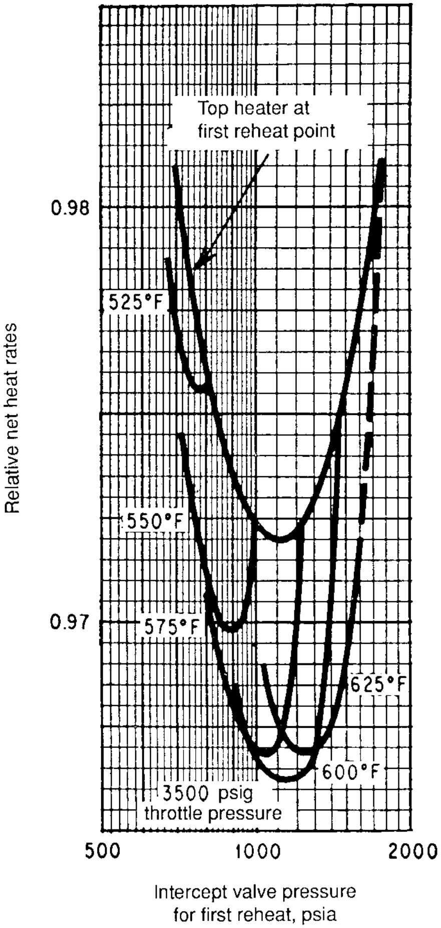

FIGURE C3.20 Relative performance for typical double-reheat units with various combinations of first-reheat intercept-valve pressure and final feedwater temperature.[27] *(Courtesy of General Electric Co.)*

a series of heat exchangers (feedwater heaters) through which flows the feedwater from the condenser on its return to the steam generator. Bleeding is also advantageous for the turbine in that it reduces the mass flow rate of steam in the lower-pressure stages, which is a desirable feature from the turbine designer's point of view. In most cases it reduces the exhaust losses which occur between the last turbine stage and the condenser.

One of the most frequent cycle changes which is considered in designing a power plant is whether to increase the number of feedwater heating extraction points. This problem does not have a simple answer applicable in every case. Theoretical prediction of a change in station heat rate, as published by many authors, is based

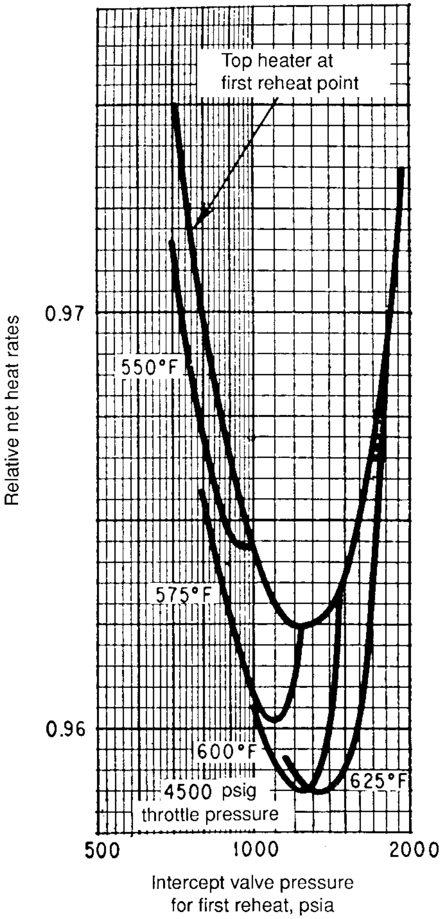

FIGURE C3.21 Relative performance for typical double-reheat units with various combinations of first-reheat intercept-valve pressure and final feedwater temperature.[27] *(Courtesy of General Electric Co.)*

TABLE C3.10 Basic Cycle Parameters[28]

	738 MW, 3500 psig	900 MW, 4500 psig
Maximum capability, MW	826	1000
Maximum throttle pressures, psia	3500	4500
First reheat intercept valve pressure, psia	980	1360
Second reheat intercept valve pressure, psia	340	390
Final feedwater temperature, °F	548	590
Number of feedwater heaters	7	8

TABLE C3.10M (Metric) Basic Cycle Parameters[28]

	738 MW, 24.13 MPa gauge (3500 psig)	900 MW, 31.03 MPa gauge (4500 psig)
Maximum capability (MW)	826	1000
Maximum throttle pressure (MPa)	24.13	31.03
First reheat intercept valve pressure (MPa)	6.76	9.38
Second reheat intercept valve pressure (MPa)	2.34	2.69
Final feedwater temperature (°C)	287	310
Number of feedwater heaters	7	8

on the assumption that the enthalpy (or temperature) rise is divided equally among the heaters. This is difficult to achieve in practice since the actual feedwater enthalpy rises in the heaters are determined by the extraction location available in the turbine. As a result, the heat-rate gains due to additional heaters typically may be only about one half the theoretical value. Normally for optimum application, the heater above the reheat point has a feedwater temperature rise of 50 to 100°F (10 to 38°C). The number of feedwater heaters to be used is also an economic consideration which must be determined on the basis of power plant cycle optimization. Recently, seven or eight heaters have been used in both fossil-fueled and nuclear power plants.

It must be emphasized that the stage pressures at extraction points change with turbine load and are roughly proportional to the mass flow rate of steam to the following stage.

In a multistring cycle when a heater is removed from service, the extraction cross-tie arrangement will be one of the deciding factors in the turbine load limitation. Extraction cross ties are the means by which extraction pipes at the same pressure level can be connected.

EXPERIENCE FEEDBACK

Use appropriate materials and welding processes and procedures for all piping. Be aware of erosion and corrosion problems in high-moisture-content steam lines (>5 percent moisture steam extraction lines) and in drain lines (feedwater heater, moisture separator, and reheat drain lines).

Preventing Turbine Water Induction

Turbine water induction prevention criteria for hot reheat lines in fossil-fired power plants are similar to those for main steam, that is, low-point drain design per ASME TDP-1.[26] Turbine water induction prevention criteria for cold reheat lines are more of a concern due to reheater atemperator (regulating the hot reheat steam temperature) spray or feedwater heaters which extract steam from the cold reheat line. The special prevention criteria for cold reheat lines are specified in the ASME Standard No. TDP-1. For nuclear power plants with light water cooled reactors (PWR, BWR), cold reheat lines carry steam containing moisture. Therefore, the special prevention criteria specified in ASME Standard No. TDP-2[7] must be applied.

REPAIRS, REPLACEMENTS, AND MODIFICATIONS

Use of flanges in high-pressure and high-temperature steam may cause leakage problems. Defects in weld metal detected by examinations or by tests shall be eliminated and repaired when necessary or the indication reduced to an acceptable limit. Weld metal surface defects may be removed by grinding or machining and need not be repaired by welding, provided the remaining thickness of the section is not reduced below that required. The depression, after defect elimination, is blended uniformly into the surrounding surface; and the area is examined by a magnetic particle or liquid penetrant method in accordance with the code after blending. Defects detected by visual or volumetric method and located on an interior surface need only be reexamined by the method which initially detected the defect when the interior surface is inaccessible for surface examination. Excavations in weld metal, when repaired by welding, shall meet the requirements of the code. The repaired area shall be heat treated, if required.

It is important, for the convenience of the operating and maintenance personnel and to minimize the possibility of making mistakes, that piping be arranged so as to make the purpose of each line and valve as obvious as possible. Good arrangement is especially important to personnel making repairs, replacements, and modifications to piping systems and components. Valves in general, and bypass valves in particular, should be installed so that their purpose is evident at a glance. It is desirable that bypass valves be grouped together where all can be seen at once rather than placed in scattered locations close to separate pieces of equipment. The possibility of an error in operation or maintenance procedures can be further reduced by stenciling the purpose of each line on the pipe close to its valve. A simple illustration of this point is shown in Fig. C3.22, a photograph of the piping for a small deaerator.

A good piping arrangement should utilize the foregoing criteria. It must also

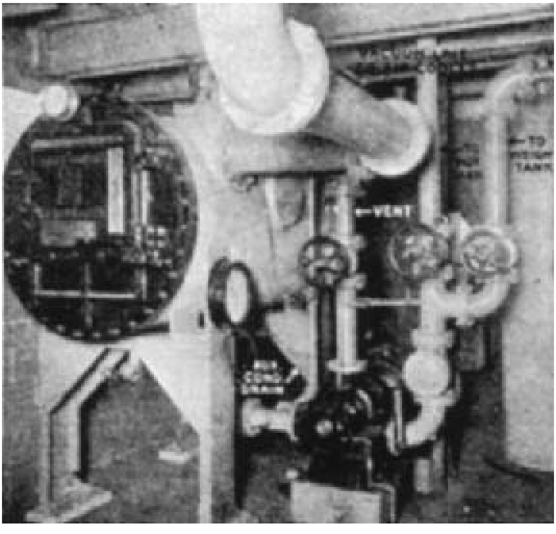

FIGURE C3.22 How to make the purpose of valves obvious.

be coordinated with the plant structure; heating, ventilating, and air-conditioning (HVAC) systems; electrical layout; equipment selection; and other local features that impact access, visibility, and related factors. The concepts in Chap. B1 and B3, the flow characteristics in Chap. B8, and the computer methods in App. E9 of this handbook provide guidance for the design phase of steam piping systems. Operational and life-extension phases must also be considered in steam systems.

REFERENCES

1. The American Society of Mechanical Engineers Boiler and Pressure Vessel Code, Section III, Rules for Construction of Nuclear Power Plant Components, 1995 ed., New York.
2. ASME Code for Pressure Piping, B31, an American National Standard, Power Piping, ASME B31.1 (1998 ed.), American Society of Mechanical Engineers, New York.
3. ASME Code for Pressure Piping, B31, an American National Standard, Process Piping, ASME B31.3 (1996 ed.), American Society of Mechanical Engineers, New York.
4. American Standard, ‘‘Welded and Seamless Wrought Steel Pipe,’’ ASME B36.10M, 1995.
5. American Standard, ‘‘Stainless Steel Pipe,’’ ASME B36.19M, 1985.
6. American Standard, ‘‘Factory-Made Wrought Steel Buttwelding Fittings,’’ ASME B16.9, 1993.
7. ASME Standard TDP-2, ‘‘Recommended Practices for the Prevention of Water Damage to Steam Turbines Used for Electric Power Generation,’’ Nuclear Fueled Plants, 1985.
8. W.C. Unwin, ‘‘Flow of Gas in Mains and Distribution at High Pressure,’’ *Proceedings of the Institute of Gas Engineers*, in *J. Gas Lighting, Water Supply, etc*., June 21, 1904, pp. 852–867.
9. National District Heating Association, *District Heating Handbook* (Third ed.).
10. T.J. Swierzawski, ‘‘Selected Considerations Related to Improvements in Thermal Performance of Nuclear Power Plants,’’ The Second International Topical Meeting on Nuclear Power Plant Thermal Hydraulics and Operations, Tokyo, Japan, April 1986.
11. J.W. Rooney, J.W. Sabin, D.A. Van Duyne, J.S. Hsieh, and W. Shaver, ‘‘Typical Turbine Trip Loads in a Fossil Power Plant,’’ TP 90–36, 1990 ASME Pressure Vessels and Piping Conference, Nashville, Tennessee, June 17–21, 1990.
12. D.A. Van Duyne, M. Merilo, H.H. Safwat, and A.H. Arastu, ‘‘Reducing The Frequency of Water Hammer in Nuclear Power Plants,’’ TP 90–77, 1990 ASME Pressure Vessels and Piping Conference, Nashville, Tennessee, June 17–21, 1990.
13. W. Bendick, K. Haarmnn, G. Wellnitz, and M. Zschau, ‘‘Properties of 9–12% Chromium Steels And Their Behaviour Under Creep Conditions,’’ VGB Conference ‘‘Residual Service Life 1992,’’ Mannheim, July 6 and 7, 1992.
14. W. Bendick, K. Haarmnn, and M. Zschau, ‘‘Retrofitting of Old Steamline Components by P91,’’ Baltica II International Conference on Plant Life Management & Extension, Helsinki-Stockholm, October 5–6, 1992.
15. M. Mimura, M. Ohgame, H. Naoi, and T. Fujita, ‘‘Development of 9 Cr-0.5 Mo-1.8 W-V-Nb Steel for Boiler Tube and Pipe,’’ *Proceedings for Conference on High Temperature Materials for Power Engineering*, 1990, pp. 485–494, Liege, September 24–27, 1990.
16. American Standard, ‘‘Forged Steel Fittings, Socket-Welding and Threaded,’’ ASME B16.11, 1996.
17. American Standard, ‘‘Valves—Flanges, Threaded, and Welding End,’’ ASME B16.34, 1996.
18. Pipe Fabrication Institute Specifications & Standards No. PFI ES-24 92, November 14, 1997.

19. American Petroleum Institute Standard, ‘‘Compact Steel Gate Valves’’ (Fifth ed.), API 602, 1993.
20. The American Society of Mechanical Engineers Boiler and Pressure Vessel Code, Section I, Rules for Construction of Power Boilers (1995 ed.), New York.
21. American Standard, ‘‘Unified Inch Screw Threads (UN and UNR Thread Form),’’ ANSI B1.1, 1989.
22. American Standard, ‘‘Square and Hex Bolts and Screws Inch Series Including Hex Cap Screws and Lag Screws,’’ B18.2.1, 1981.
23. American Standard, ‘‘Square and Hex Nuts (Inch Series),’’ ANSI B18.2.2, 1987.
24. *Piping Handbook* (Sixth ed.), edited by M. L. Nayyar, McGraw-Hill Book Company, New York, 1992.
25. American Standard, ‘‘Pipe Flanges and Flanged Fittings,’’ ASME B16.5, 1996.
26. ASME Standard, TDP-1, ‘‘Recommended Practices for the Prevention of Water Damage to Steam Turbines Used for Electric Power Generation,’’ Fossil Fueled Plants, 1985.
27. R.L. Bartlett, *Steam Turbine Performance and Economics,* McGraw-Hill, New York, 1958.
28. R.C. Spencer, ‘‘Design of Double Reheat Turbines for Supercritical Pressures,’’ *Proceedings of the American Power Conference*, vol. 42, 1980.
29. *Annual Book of ASTM Standards*, Volume 01.01 ‘‘Steel—Piping, Tubing, Fittings,’’ ASTM, Philadelphia, Pennsylvania, 1997.

BIBLIOGRAPHY

American Standard, ‘‘Wrought Steel Buttwelding Short Radius Elbows and Returns,’’ ANSI B16.28, 1994.

Manufacturers Standardization Society Standard, MSS-SP-79, ‘‘Socket-Welding Reducer Inserts,’’ 1992.

ASME B16.47, 1996, ‘‘Large Diameter Steel Flanges.’’

Manufacturers Standardization Society Standard, MSS-SP-44, ‘‘Steel Pipe Line Flanges,’’ 1990.

CHAPTER C4
BUILDING SERVICES PIPING

Mohammed N. Vohra, P.E.
Senior Mechanical Engineer
Delon Hampton & Associates
Washington, D.C.

Paul A. Bourquin, P.E.
Consultant
Pleasantville, New York

This chapter discusses the building services piping for heating, cooling, and compressed air installed in industrial, institutional, commercial, and public buildings and multiunit residences. Generally building-services piping operates at relatively low temperatures and pressures. ASME Pressure Piping Code, Sec. B31.9, Building Services Piping, was developed to employ a simplified approach. ASME B31.9 covers the piping which does not require the ranges of sizes, pressures, and temperatures covered in ASME Pressure Piping Code, Sec. B31.1, Power Piping.

CONSTRUCTION CODES

Every plot of land is under the authority of a jurisdiction. It is necessary to obtain a building permit from the authorities having jurisdiction over the property on which the building is to be placed. To obtain a permit the plans must show that the building is to be built in conformance with the building code which has been adopted by the local authority. The local authority has its own construction codes or has adopted one of the several national codes.

Building codes are omnibus-type documents which treat all aspects of construction and specify safety requirements as well as referencing safety codes written by other code-writing organizations. Building codes, safety codes, and standards are updated periodically by the issuing organizations, and the latest revision should be used.

A listing of code-writing bodies and the specific sections of the codes which control piping follows:

Building Codes

International Mechanical Code—A comprehensive International Mechanical Code was prepared in 1995 by a development committee appointed by and consisting of representatives of Building Officials and Code Administrators International

TABLE C4.1 Safety Codes

ASME—American Society of Mechanical Engineers

- BPVC—Boiler and Pressure Vessel Code
  - Section I—Power Boilers
  - Section IV—Heating Boilers
  - Section VIII—Pressure Vessels
  - Section IX—Welding and Brazing Qualifications
- ASME B31—Code for Pressure Piping
  - B31.1—Power Piping
  - B31.3—Process Piping
  - B31.5—Refrigeration Piping
  - B31.9—Building Services Piping

NFPA—National Fire Protection Association

- National Fire Codes
  - NFPA 30—Flammable and Combustible Liquids Code
  - NFPA 30A—Automotive and Marine Service Station Code
  - NFPA 31—Installation of Oil Burning Equipment
  - NFPA 32—Drycleaning Plants
  - NFPA 50—Bulk Oxygen Systems at Consumer Sites
  - NFPA 51—Design and Installation of Oxygen-Fuel Gas Systems for Welding, Cutting, and Allied Processes
  - NFPA 51B—Cutting and Welding Processes
  - NFPA 54 (ANSI Z223.1)—National Fuel Gas Code
  - NFPA 58—Storage and Handling of Liquified Petroleum Gases
  - NFPA 88B—Repair Garages
  - NFPA 99—Health Care Facilities
  - NFPA 407—Aircraft Fuel Servicing

(BOCA), International Conference of Building Officials (ICBO), and Southern Building Code Congress International (SBCCI). The International Mechanical Code is supported and maintained jointly by BOCA, ICBO, and SBCCI for use with each organization's family of codes.

Requirements for piping were specified in the mechanical sections of the building codes and in the referenced safety sections. The 1995 edition of International Mechanical Code supersedes the earlier editions of the individual mechanical codes published by each code writing body, i.e., National Mechanical Code, Uniform Mechanical Code, and Standard Mechanical Code. When referenced, the applicable section of the ASME B31 Pressure Piping Code should be used.

Safety Codes

Safety codes give rules for the construction of piping systems. These codes are often listed as reference documents in building codes. They have also been adopted as law by some states. Applicable codes are listed in Table C4.1

Component Standards

Component standards list dimensions, chemical composition, and tensile strength of materials. They sometimes contain pressure-temperature ratings. These standards are referenced in both the building codes and the safety codes. Component standards used for building piping are listed in Table C4.2.

Responsibility

The ultimate responsibility for the proper design and construction of a building and its various systems remains with the owner. The owner can use professionals and experts to do the actual work and perform the inspections, but in the event of a failure, the owner is the first person who will be sought out for satisfaction. Based on the requirements of the local law, however, the division of responsibility may differ from one jurisdiction to another.

BASIC SYSTEMS

Each piping system in a building is used to convey a fluid to heat, cool, or perform some other service. Energy must be used to move the fluid: For a liquid, the energy is provided by a pump; for steam systems, a boiler; and for compressed air, a compressor. Systems fall into two broad categories:

1. Recirculating
2. Distributing

Steam

Steam systems are usually of a recirculating type to return the condensate to the boiler. If the condensate is not recoverable or may be contaminated, it is wasted and the system becomes, in effect, distributive. The return of a steam-recirculating system is in the form of liquid condensate which is recovered through steam traps which pass the condensed steam in the form of a liquid but do not pass steam. Steam piping should be pitched downward in the direction of steam flow. Steam takeoffs should always be from the top of the main. As condensation is constantly occurring due to heat loss through the pipe walls, a trap must be installed at any rise in pipe elevation, at the end of horizontal mains, and at intermediate points of long runs. Traps are also used at the discharge of heating devices such as radiators, unit heaters, and steam coils.

The condensate system should be pitched downward in the direction of flow to the boiler or recovery tank. If it is not feasible to have continuous pitch to the boiler, a condensate pump can be used and the pump discharge line can change elevation as needed.

Some small low-pressure systems do not use traps; the condensate returns by gravity to the boiler through the supply or return pipes. All piping must pitch downward toward the boiler. Supply pipe-steam velocities should be kept low to prevent slugs of condensate from being carried along with the steam and producing loud knocks at changes in direction. Noise is apt to occur during warm-up when cold pipes result in heavy condensation.

TABLE C4.2 Component Standards

Ferrous pipe and tubing	
ASME	
B36.10	Welded and Seamless Wrought Steel Pipe
B36.19	Stainless Steel Pipe
ASTM	
A53	Pipe, Steel-Black and Galvanized, Welded and Seamless
A106	Seamless Carbon Steel Pipe for High Temperature Service
A135	Electric-Resistance-Welded Steel Pipe
A139	Electric Fusion Welded Steel Pipe
A211	Spiral-Welded Steel or Iron Pipe
A312	Seamless & Welded Austenitic Stainless Steel Pipe
A377	Ductile Iron Pressure Pipe
A539	Electric-Resistance-Welded Coiled Steel Tubing for Gas and Fuel Oil Lines
ANSI/AWWA	
A21.51/C151	Ductile Iron Pipe Centrifugally Cast in Metal Molds or Sand-Lined Molds for Water or Other Liquids
AGA/ANSI	
A21.52	Ductile Iron Pipe, Centrifugally Cast in Metal Molds or Sand-Lined Molds for Gas
Ferrous fittings and valves	
ASME	
B16.1	Cast Iron Pipe Flanges and Flanged Fittings
B16.3	Malleable Iron Fittings, Classes 150 and 300
B16.4	Cast Iron Threaded Fittings, Classes 125 and 250
B16.5	Pipe Flanges and Flanged Fittings
B16.9	Factory-Made Wrought Steel Butt-Weld Fittings
B16.10	Face-to-Face and End-to-End Dimensions of Valves
B16.11	Forged Steel Fittings, Socket-Weld, and Threaded
B16.14	Ferrous Pipe Plugs, Bushings and Lock Nuts with Pipe Threads
B16.28	Wrought Steel Butt-Weld Short Radius Elbows and Returns
B16.33	Manually Operated Metallic Gas Valves for Use in Gas Piping Systems up to 125 psig
B16.34	Valves—Flanged, Threaded, and Welding End
B16.39	Malleable Iron Threaded Pipe Unions, Classes 150, 250, and 300
B16.42	Ductile Iron Pipe Flanges and Flanged Fittings, Classes 150 and 300
B16.47	Large Diameter Steel Flanges
ASTM	
A403	Wrought Austenitic Stainless Steel Piping Fittings
MSS	
SP-43	Wrought Stainless Steel Butt-Weld Fittings
SP-76	Butterfly Valves
SP-70	Cast Iron Gate Valves, Flanged and Threaded Ends
SP-71	Cast Iron Swing Check Valves, Flanged and Threaded Ends
SP-72	Ball Valves with Flanged or Butt-Weld Ends for General Service
SP-78	Cast Iron Plug Valves, Flanged or Threaded Ends
SP-83	Carbon Steel Pipe Unions, Socket-Weld or Threaded
SP-84	Steel Valves, Socket-Weld and Threaded Ends
SP-85	Cast Iron Globe and Angle Valves, Flanged and Threaded Ends

TABLE C4.2 Component Standards (*Continued*)

Copper and aluminum pipe and tubing	
ASTM	
B42	Seamless Copper Pipe, Standard Sizes
B43	Seamless Red Brass Pipe, Standard Sizes
B68	Seamless Copper Tube, Bright Annealed
B75	Seamless Copper Tube
B88	Seamless Copper Water Tube
B210	Aluminum-Alloy Drawn Seamless Tube
B241	Aluminum-Alloy Seamless Pipe and Seamless Extruded Tube
B251	General Requirements for Wrought Seamless Copper and Copper-Alloy Tube
B302	Threadless Copper Pipe
B547	Aluminum-Alloy Formed and Arc Welded Round Tube
Copper and aluminum fittings and valves	
ASME	
B16.15	Cast Bronze Threaded Fittings, Classes 125 and 250
B16.18	Cast Copper-Alloy Solder Joint Pressure Fittings
B16.22	Wrought Copper and Copper-Alloy Solder Joint Pressure Fittings
B16.24	Bronze Pipe Flanges and Flanged Fittings, Classes 150 and 300
B16.26	Cast Copper-Alloy Fittings for Flared Copper Tubes
B361	Factory-Made Wrought Aluminum and Aluminum-Alloy Welding Fittings
MSS	
SP-80	Bronze Gate, Globe, Angle, and Check Valves
Other components and standards	
ASME	
B1.20.1	Pipe Threads
B16.21	Nonmetallic Flat Gaskets for Pipe Flanges
B16.25	Butt-Weld Ends for Pipe, Valves, Flanges and Fittings
B18.2.1	Square and Hex Bolts and Screws
B18.2.2	Square and Hex Nuts
ASTM	
A36	Structural Steel
A183	Carbon Steel Track Bolts and Nuts
A193	Alloy-Steel and Stainless Steel Bolting Materials for High Temperature Service
A194	Carbon and Alloy-Steel Nuts for Bolts for High Pressure and High Temperature Service
A307	Carbon Steel Bolts and Studs, 60,000 psi Tensile Strength
B32	Solder Metal
ANSI/AWWA	
A21.11/C111	Rubber-Gasket Joints for Ductile Iron and Gray-Iron Pressure Pipe and Fittings
ANSI/AWS	
A5.1	Covered Carbon Steel Arc Welding Electrodes
A5.2	Iron and Steel Oxyfuel Gas Welding Rods
A5.3	Aluminum and Aluminum-Alloy Covered Arc Welding Electrodes

TABLE C4.2 Component Standards (*Continued*)

ANSI/AWS (*Continued*)	
A5.6	Covered Copper and Copper-Alloy Welding Rods and Electrodes
A5.7	Copper and Copper-Alloy Bare Welding Rods and Electrodes
A5.8	Brazing Filler Metal
A5.9	Corrosion-Resisting Chromium and Chromium-Nickel Steel Bare and Composite Metal Cored and Stranded Welding Electrodes and Welding Rods
A5.10	Aluminum and Aluminum-Alloy Bare Welding Rods and Electrodes
A5.12	Tungsten Arc Welding Electrodes (Non-Consumable)
A5.18	Carbon Steel Filler Metals for Gas Shielded Arc Welding
A5.20	Carbon Steel Electrodes for Flux Cored Arc Welding
A5.22	Flux Cored Corrosion-Resisting Chromium and Chromium-Nickel Steel Electrodes
MSS	
SP-6	Standard Finishes for Contact Faces of Pipe Flanges and Connecting-End Flanges of Valves and Fittings
SP-25	Standard Marking System for Valves, Fittings, Flanges, and Unions
SP-58	Pipe Hangers and Supports—Materials, Design, and Manufacture
SP-69	Pipe Hangers and Supports—Selection and Application
SP-89	Pipe Hangers and Supports—Fabrication and Installation Practices
ASTM	
E488	Test Method for Strength of Anchors in Concrete and Masonry Elements
ANSI/AWWA	
A21.50/C150	Thickness Design of Ductile Iron Pipe
Nonmetallic pipe and fittings*	
ASTM	
F412	Definition of Terms Relating to Plastic Piping Systems
D1788	Specifications for Acrylonitrile-Butadiene-Styrene (ABS) Plastics, Rigid
D1527	ABS Plastic Pipe, Schs 40 and 80
D2235	Solvent Cement for ABS Plastic Pipe and Fittings
D2468	ABS Plastic Pipe Fittings, Sch 40
D3965	Rigid ABS Compounds for Pipe and Fittings
D2581	Specifications for Polybutylene (PB) Plastics Molding and Extrusion Materials
D2657	Standard Practice for Heat-Joining Polyolefin Pipe and Fittings
D2666	PB Plastic Tubing
D3000	PB Plastic Pipe (SDR-PR) Based on Outside Diameter
D1248	Specifications for Polyethylene (PE) Plastics Molding and Extrusion Materials
D2104	PE Plastic Pipe, Sch 40
D2447	PE Plastic Pipe, Schs 40 and 80, Based on Outside Diameter
D2683	Socket-Type PE Fittings for Outside Diameter Controlled PE Pipe and Tubing
D2737	PE Plastic Tubing
D3350	Specifications for PE Plastic Pipe and Fittings Materials
D1784	Specifications for Rigid Poly (Vinyl Chloride) (PVC) Compounds and Chlorinated Poly (Vinyl Chloride) (CPVC) Compounds
F437	Threaded CPVC Plastic Pipe Fittings, Sch 80
F438	Socket-Type CPVC Plastic Pipe Fittings, Sch 40

TABLE C4.2 Component Standards (*Continued*)

ASTM (*continued*)	
F439	Socket-Type CPVC Plastic Pipe Fittings, Sch 80
F441	CPVC Plastic Pipe, Schs 40 and 80
F442	CPVC Plastic Pipe (SDR-PR)
F493	Specification for Solvent Cements for CPVC Plastic Pipe and Fittings
D2846	CPVC Plastic Hot- and Cold-Water Distribution Systems
D1785	PVC Plastic Pipe, Schs 40 and 80
D2241	PVC Pressure-Rated Pipe (SDR Series)
D2464	Threaded PVC Plastic Pipe Fittings, Sch 80
D2466	PVC Plastic Pipe Fittings, Sch 40
D2467	Socket-Type PVC Plastic Pipe Fittings, Sch 80
D2564	Solvent Cements for PVC Plastic Pipe and Fittings
D2855	Practice for Making Solvent-Cemented Joints with PVC Pipe and Fittings
D2310	Standard Classification for Machine-Made Reinforced Thermosetting-Resin Pipe (RTRP)
D2517	Reinforced Epoxy Resin Gas Pressure Pipe and Fittings
D2996	Filament-Wound Reinforced Thermosetting-Resin Pipe
D3517	Fiberglass (RTRP) Pressure Pipe
D3754	Fiberglass (RTRP) Sewer and Industrial Pressure Pipe

* This list is limited to some of the basic piping standards. There are more than 200 ASTM standards relating to plastic pipe.

Condenser Water

A typical condenser-water system recirculates the water from the refrigeration machine condenser, through the pump, up to the sprays on the top of the cooling tower, and from the basin of the tower back to the condenser. Since this is an open system, expansion of the water is not a factor; the water level in the basin compensates.

Because it is sprayed through the air, the water contains oxygen and other contaminants and becomes extremely corrosive. For many years chromates were used to inhibit steel-pipe corrosion with success. Recent environmental rules have prohibited chromate water treatment, and new methods which require closer control are being used. It is important to clean condenser-water systems carefully and monitor treatment closely to prevent the destruction of the piping system.

Chilled Water

Chilled water systems are closed recirculating systems and therefore require expansion tanks. An open expansion tank can be used at the highest point of the system, with makeup water provided through a tank level control device. Expansion can also be provided for by use of a closed hydropneumatic tank at any point in the system. For this type of tank the water level is maintained by a pressure pump controlled by a tank-level sensor. As sufficient air pressure must be maintained above the water in the tank to support the water to the highest point of the system, it is sometimes necessary to provide a method for increasing the air pressure in the tank. The tank must be constructed for the proper pressure, and a relief valve must be provided. The corrosion problem is not as severe as in condenser-water systems, but water treatment should be used.

Hot Water

A high-temperature hot-water system is a closed recirculating system that returns the hot water to the boiler. High-temperature hot water is relatively high-pressure water distributed to the point of usage by means of pumps. High-temperature hot water can be directly piped to heating coils or to heat exchanger where it can be converted to a lower pressure system, steam, or low-temperature hot water. Generally the circulation is limited to mechanical rooms for safety concerns.

Low-temperature hot water is a relatively low-pressure recirculating system and requires an expansion tank when a heat exchanger is utilized for conversion. Air vents and air separators are required to remove trapped air which affects the flows. Because it is a secondary recirculating system, water treatment is required. Normally an expansion tank is a closed hydro-pneumatic tank equipped with an air diaphragm which is sized to meet the expansion of the fluid in the system.

Compressed Air

A compressed-air system is an example of a distributive system. The air is piped to its point of use for a control or tool system, at which point energy is recovered and reduced to atmospheric pressure and released.

PIPE DESIGN

Piping systems are designed to withstand the combined effects of the internal pressure and temperature of the contained fluid and other external stress-imposing forces such as expansion or contraction, support spans, earthquake, and wind.

The internal pressure produces two types of stresses in the pipe:

1. *Hoop stress,* also called the tangential stress, is the result of the radial pressure in the pipe. This force tends to split the pipe open along a seam.
2. *Longitudinal stress* is caused by the force of the pressure on the end of the pipe. This force is exerted equally on a closed end such as a cap or on an open component such as an elbow. It acts along the axis of the pipe and tends to pull the pipe apart around its circumference or at a joint. Other longitudinal stresses are caused by the pipe acting as a beam between supports and by expansion or contraction where the pipe ends are fixed by anchors.

Pressure

The internal pressure of steam systems is the gauge pressure of the steam as determined by the boiler control or the setting of a pressure-reducing valve. For compressed air or other gasses, the gauge pressure is determined by the compressor control or the setting of a regulator. This pressure can be considered constant throughout the system.

For liquid piping systems the pressure at any point is determined by adding the pressure produced by the circulating pump to the static pressure. The static pressure is calculated in a state of no flow (pump off) and is the result of the weight of the liquid in the pipe from the highest point of the system to the lowest. This pressure varies with the elevation of each point in the piping.

The pressure in liquid-piping systems is also referred to as *head*. This is the height of a column of the liquid in the pipe which would be supported by the pressure.

The weight of one cubic foot (0.028 cubic meter) of water at Standard Temperature and Pressure (STP) is 62.5 pounds (28.3 kg.). The footprint of a cubic foot is 144 square inches. The weight per square inch of a column of water one foot high is:

$$62.5/144 = 0.43 \text{ psi } (3 \text{ kPa}) \text{ or}$$
$$1 \text{ psi } (6.9 \text{ kPa}) = 2.3 \text{ ft } (0.7 \text{ m}) \text{ of water}$$

For circulating liquid piping systems, the datum pressure is at the expansion tank. With an open tank the pressure at the surface is atmospheric (0 psig). A hydropneumatic tank has a regulator or relief valve which determines the pressure on the surface of the water in the tank. The pressure at other points in the system is found by adding the pressure produced by the circulating pump to the static pressure of the system. For a flowing closed-loop system the pump pressure is highest at the pump discharge and will decrease, due to friction, as the fluid flows through the pipe and other elements of the system back to the pump suction. For a system which may have no flow with the pump running, the pump shutoff pressure may be imposed on the system, depending on the location of the expansion tank. See Fig. C4.1 for examples.

In Fig. C4.1*b* a 30-story building with two subgrade levels could have a water piping–elevation difference of 400 ft (122 m) from the open expansion-tank water surface in the penthouse down to the pump in the basement. This is called a static head of 400 ft (122 m) the design static pressure would be calculated as follows:

$$400 \text{ ft} \times 0.43 \text{ psi/ft} = 172 \text{ psi } (1186 \text{ kPa})$$

Horizontal offsets in the piping system do not affect the static pressure.

The total pump head is 70 ft, which is required to overcome the resistance of the system. The pump-discharge pressure in this example is 48 ft, or 21 psi, which when added to the static pressure would provide the system design pressure:

$$\text{Design pressure} = 172 \text{ psi} + 21 \text{ psi} = 193 \text{ psi } (1331 \text{ kPa})$$

All pipe, fittings, valves, pumps, and heat exchangers on the pump-discharge part of the system must be designed to withstand this pressure at the lower elevation. If it is possible to block the flow in the system, a study should be made to see if the pump shutoff pressure may cause a higher design pressure. On the suction side of the pump, the design pressure will be 172 psi (118 kPa), which will be the pressure when the pump is not operating. It is advantageous to locate the heat exchangers and associated valves in the lower pressure portion of the piping system. At the higher elevations it is economical to use valves and fittings of a lower pressure class rating.

Temperature

The pipe-material temperature is considered to be the same as the temperature of the fluid in the pipe. For saturated steam systems it is the saturation temperature corresponding to the gauge pressure. The temperature is important since the

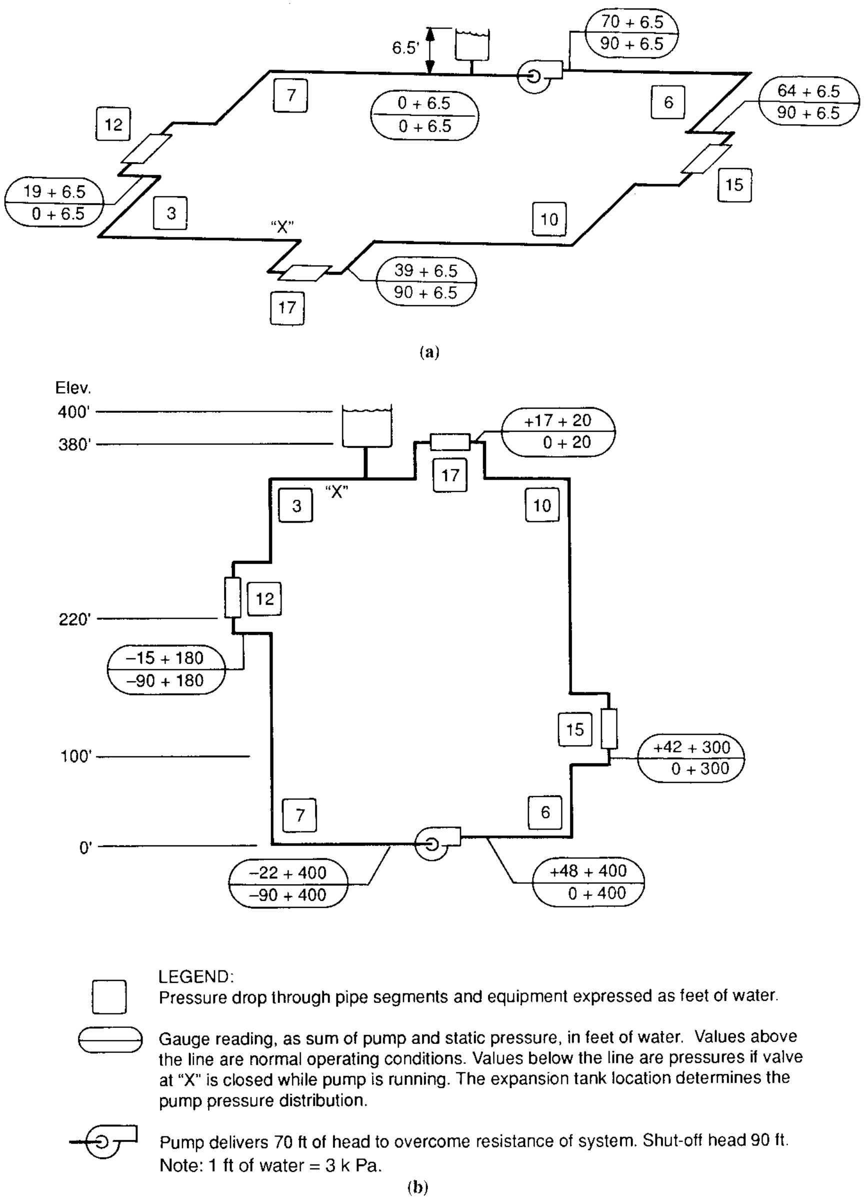
6.5'
70 + 6.5
90 + 6.5
7
0 + 6.5
0 + 6.5
6
12
64 + 6.5
90 + 6.5
19 + 6.5
0 + 6.5
3
"X"
10
15
17
39 + 6.5
90 + 6.5
(a)
Elev.
400'
380'
+17 + 20
0 + 20
17
"X"
3
10
12
220'
−15 + 180
−90 + 180
15
+42 + 300
0 + 300
100'
7
6
0'
−22 + 400
−90 + 400
+48 + 400
0 + 400
(b)

LEGEND:

Pressure drop through pipe segments and equipment expressed as feet of water.

Gauge reading, as sum of pump and static pressure, in feet of water. Values above the line are normal operating conditions. Values below the line are pressures if valve at "X" is closed while pump is running. The expansion tank location determines the pump pressure distribution.

Pump delivers 70 ft of head to overcome resistance of system. Shut-off head 90 ft. Note: 1 ft of water = 3 k Pa.

FIGURE C4.1 (*a*) Horizontal piping system; (*b*) vertical piping system.

strength of materials used in the systems decreases as the temperature rises. For ferrous materials in building systems fluid temperatures are not usually high enough to be a factor. However, copper and aluminum and the joints in these materials can be affected by the temperatures encountered. Thermoplastics, as a group, lose strength rapidly as the temperatures rise above 70°F (21°C). At 100°F (38°C) they have lost approximately 25 percent of their strength and at 140°F (60°C) less than 50 percent remains.

Allowable Stress

Allowable stresses for pipe materials are tabulated in the safety codes listed in Table C4.1. As this chapter concerns piping in buildings, App. A of ASME B31.9, Building Services Piping, will be used for allowable stress values.

The published allowable stresses are determined for various materials by using the lowest of the following criteria for each material:

1. Cast iron or ductile iron
    - ***a.*** One-tenth of the specified minimum yield strength at room temperature
    - ***b.*** One-tenth of the tensile strength at the listed temperature
2. Malleable iron
    - ***a.*** One-fifth of the specified minimum tensile strength at room temperature
    - ***b.*** One-fifth of the tensile strength at the listed temperature
3. Other metals
    - ***a.*** One-fourth of the specified minimum tensile strength at room temperature
    - ***b.*** One-fourth of the tensile strength at the listed temperature
    - ***c.*** Two-thirds of the specified minimum yield strength at room temperature
    - ***d.*** Two-thirds of the yield strength at the listed temperature
4. Thermoplastics
    - ***a.*** One-half of the hydrostatic design basis at design temperature as determined by the methods in ASTM D2837
5. Reinforced thermosetting resins
    - ***a.*** One-half of the hydrostatic design basis at design temperature as determined by the methods in ASTM D2992

The tensile and yield strengths are found in the standards listed in Table C4.2 for each material specification. The shear and bearing stress values of pipe materials can be determined by applying multipliers:

$$\text{Shear stress} = 0.8 \times \text{basic allowable stress}$$

$$\text{Bearing stress} = 1.6 \times \text{basic allowable stress}$$

When pipe is produced by a method of manufacture which results in a welded longitudinal seam, the basic allowable stress for the pipe is modified by a factor E, called the joint efficiency factor. Table C4.3 lists some piping materials used for building piping and the allowable stresses and E factors for each material. The listed values are SE, which is the product of the allowable stress S and the longitudinal joint efficiency factor E.

TABLE C4.3 Allowable Stresses

Material & ASTM Spec. no.	Grade	Available sizes NPS (DN)	*E* factor	Strengths		Max allowable stress value *SE* (ksi) for metal temperature not over			
				Min. tensile (ksi)	Min. yield (ksi)	0–100°F	200°F	300°F	400°F
Carbon steel									
Seamless pipe and tube									
A 53	B	¼ to 26 (8 to 650)	1.00	60.0	35.0	15.0	15.0	15.0	15.0
A 106	B	¼ to 30 (8 to 750)	1.00	60.0	35.0	15.0	15.0	15.0	15.0
Electric resistance welded pipe and tube									
A 53	B	2 to 20 (50 to 500)	0.85	60.0	35.0	12.8	12.8	12.8	12.8
A 135	B	2 to 30 (50 to 750)	0.85	60.0	35.0	12.8	12.8	12.8	12.8
Furnace butt welded (continuous weld) pipe and tube									
A 53	F	½ to 4 (15 to 100)	0.60	45.0	25.0	6.8	6.8	6.8	6.8
Wrought welding fittings									
A 234	WPB	½ to 42 (15 to 1050)	1.00	60.0	35.0	15.0	15.0	15.0	15.0
Stainless steel; welded pipe and tube									
A 312	TP304	¼ to 30 (8 to 750)	0.85	75.0	30.0	18.8	15.7	14.1	13.0
A 312	TP316	¼ to 30 (8 to 750)	0.85	75.0	30.0	18.8	16.2	14.6	13.4

TABLE C4.3 Allowable Stresses (*Continued*)

Material & ASTM Spec. no.	Grade	Available sizes NPS (DN)	*E* factor	Strengths		Max allowable stress value *SE* (ksi) for metal temperature not over			
				Min. tensile (ksi)	Min. yield (ksi)	0–100°F	200°F	300°F	400°F
Ductile iron									
C151/A21.51		4 to 48 (100 to 1200)	—	60.0	42.0	4.2	4.2	4.2	4.2
Aluminum Alloy; seamless pipe and tube									
B 241	3003	¾ to 24 (20 to 600)	0	14.0	—	3.4	3.4	2.4	1.4
B 241	6061	¾ to 24 (20 to 600)	T4	26.0	—	6.5	6.5	6.0	4.5
Copper and copper alloys; seamless pipe and tube									
B 75	102–142	¼–12 (8–300)	annealed	30.0	9.0	6.0	4.8	4.7	3.0
B 75	102–142	¼–12 (8–300)	light drawn	36.0	30.0	9.0	9.0	9.0	8.2
B 75	102–142	¼–12 (8–300)	hard drawn	45.0	40.0	11.3	11.3	11.3	4.3
B 88	102–122	¼–12 (8–300)	annealed	30.0	9.0	6.0	4.8	4.8	3.0
B 88	102–122	¼–12 (8–300)	drawn	36.0	30.0	9.0	9.0	9.0	8.2
Structural shapes for pipe supports									
A 36	—	—	—	58.0	36.0	11.6	11.6	11.6	11.6
Bolts, nuts, and studs for flanges and supports									
A 307	B	—	—	55.0	—	7.0	7.0	7.0	7.0

Pipe Wall Thickness

The dimensions of steel pipe are governed by ASME B36.10M. This standard lists nominal pipe sizes (NPS) from NPS 1/8 to NPS 80 (DN 6 to DN 2000), with a range of wall thicknesses for each size. There are 23 different standardized wall thicknesses listed for NPS 8 (DN 200) pipe. Not all of the diameters and thicknesses are manufactured by the mills on a regular basis. Before making a selection check with a pipe supply warehouse for availability. Mills will make large quantities on order.

Pipe sizes up to and including NPS 12 (DN 300) have a standardized outside diameter which is greater than the nominal size. For sizes NPS 14 (DN 350) and larger the outside diameter is equal to the nominal size.

Two different systems for describing commonly used pipe-wall thicknesses have developed. The first, which has been used commercially for many years, uses these designations:

STD	Standard
XS	Extra strong, also called extra heavy
XXS	Double extra strong, also called double extra heavy

The second system developed from an attempt to establish a set of schedule numbers. Each schedule was to designate a wall thickness for each pipe size so the pressure-carrying capacity would be the same regardless of size. Some schedules in use are

Sch 40	Schedule 40
Sch 80	Schedule 80
Sch 160	Schedule 160

Standard and Sch 40 are the same thickness through NPS 10 (DN 250). Standard wall thickness is ⅜ (9.5 mm) in for all larger sizes, whereas Sch 40 becomes increasingly thicker. Extra strong and Sch 80 are the same thickness for all sizes through NPS 8 (DN 200). For all larger sizes extra strong pipe remains at ½-in (12.7 mm) wall thickness whereas Sch 80 becomes increasingly thicker.

Even though pipe-stress calculations are seldom required for building piping, a brief review of the basics is given so that the principles can be understood. To find the required pipe-wall thickness to contain the fluid at the design pressure use the following formula:

$$t_m = \frac{PD}{2SE} + A \qquad \text{(C4.1)}$$

Conversely, to find the pressure a pipe of known wall thickness will withstand the formula is

$$P = \frac{2SE(t_m - A)}{D} \qquad \text{(C4.2)}$$

where t_{in} = minimum required wall thickness (in)
P = internal design pressure (psig)
D = outside pipe diameter (in)
S = basic allowable stress (psi)

E = longitudinal joint efficiency factor

A = allowance for corrosion, mill tolerance, joint preparation, mechanical strength, and so on

For example, this is the procedure to find the proper wall for a NPS 2 (DN 50) 125-psig (860 kg/mm^2) steam line with threaded fittings using A53 Grade B ERW pipe:

$$t_m = \frac{PD}{2SE} + A$$

$$P = 125 \text{ psig } (878 \text{ kg/mm}^2)$$

$$D = 2.375 \text{ in } (60 \text{ mm})$$

$$SE = 12{,}800 \text{ psi } (90{,}000 \text{ kg/mm}^2)$$

$$= 0.012 \text{ in} + A \ (0.3 \text{ mm} + A)$$

The factor A requires some consideration. The corrosion allowance depends on the expected service and the maintenance of a chemical water-treatment system. For closed systems a value of 0.025 in (0.6 mm) may be sufficient. For open systems a value of 0.065 in (1.6 mm) or higher may be needed. These values can be varied for the expected service conditions in the system being designed. The allowable mill minus tolerance for A53 pipe is given in the ASTM specification as 12.5 percent of the nominal wall thickness. If the pipe is to be threaded or grooved, the depth of the groove or the depth of the thread, as listed in Table C4.4, plus a tolerance of 0.015 in (0.4 mm) should be allowed. For threaded NPS 2 (DN 50) standard weight pipe which has a nominal wall thickness of 0.154 in (4 mm) the factor A will equal the sum of:

Corrosion allowance =	0.025
Mill tolerance = 0.125 × 0.154 =	0.019
Thread depth (from Table C4.4) = 0.070 + 0.015	= 0.085
	Total A = 0.129

Note: 1 in = 25.4 mm

The minimum required wall thickness plus allowance is

$$t_m = 0.012 \text{ in } + 0.129 \text{ in } = 0.141 \text{ in } (3.6 \text{ mm})$$

Select the next larger commercially available wall thickness for use. In this case standard weight pipe with a wall thickness of 0.154 in (4 mm) is suitable for the service.

Mechanical strength should be considered as the overriding wall thickness needed to withstand the shear loads at hangers, the rough handling during installation, and unanticipated use of the pipe such as for scaffolding or hoisting after installation.

If in the above example the pipe was used for 5-psig (34 kPa) steam, the wall thickness needed to withstand the pressure would be 0.0005 in. The allowances do not change so the minimum pipe wall thickness required would be 0.0005 in (0.013 mm) + 0.129 in, which is 0.1295 in (3.3 mm). This points out that the prime consider-

TABLE C4.4 Thread and Groove Depths (tolerances not included)

Nominal pipe size (DN)	Thread depth (in)*	Groove depth (in)†
½ (15)	0.057	—
¾ (20)	0.057	0.056
1 (25)	0.070	0.063
1¼ (32)	0.070	0.063
1½ (40)	0.070	0.063
2 (50)	0.070	0.063
2½ (65)	0.100	0.078
3 (80)	0.100	0.078
4 (100)	0.100	0.083
5 (125)	0.100	0.084
6 (150)	0.100	0.085
8 (200)		0.092
10 (250)		0.094
12 (300)		0.109
14 (350)		0.109
16 (400)		0.109
18 (450)		0.109
20 (500)		0.109
24 (600)		0.172

* Dimension *h*, the height of thread, from ASME B1.20.1, Pipe Threads—General Purpose. Pipe more than 6 in is rarely threaded.

† Reference groove depth as listed by Victaulic Co.

General Note: As the plus tolerance on the pipe's outside diameter increases, the fixed thread or groove diameter cuts away more of the pipe wall thickness. Victaulic limits the plus tolerance to 1⁄32 in. This is less than that allowed by ASTM A53 or A106. If the pipe is 1⁄32 in oversize, the groove or thread depth is increased by about 30 percent. If large pipe is to be used for grooving, the plus tolerance should be stated on the pipe purchase order.

Note: 1 in = 25.4 mm.

For DN equivalents refer to Chap. A1 or App. E2.

ation for low-pressure piping systems is the mechanical strength rather than pressure containment.

Elbows, Bends, and Miters

A change in pipe direction for building piping is done by using an elbow fitting. Bends and miters may also be used but are generally not economical when labor costs are high.

Additional wall thickness must be provided when a bend is made, since the heel of the bend will stretch and thin. Table C4.5 gives the added thickness needed to provide the required minimum thickness in a 90° finished bend. The flattening of pipe during a bend should not result in a reduction of the original diameter by more than 8 percent.

For miter joints, an angular offset of 3° or less is considered to be the same as a girth weld and does not require an increase in the calculated pipe-wall thickness. The angular offset is the change in direction of the axis of the pipe. A 3° offset will result in a miter angle of 1½° to be cut on the end of each of the pipe segments to be joined. Miters can be used for offsets from 3° to 45° at pressures of 50 psig

TABLE C4.5 Pipe Thickness for Bends

Radius of bend pipe diameters*	Thickness increase†
6 or greater	$1.06t_m$
5	$1.08t_m$
4	$1.14t_m$
3	$1.24t_m$

* The pipe diameter is the nominal diameter.
† t_m is the minimum required wall thickness.

(345 kPa) or less. For miters at higher pressures the formulas in ASME B31.9 or B31.3 should be used.

Pipe Branch Design

Branch connections for pipe sizes under NPS 3 (DN 80) are usually made with threaded or grooved tees. For larger pipe sizes with welded joints, branches are made by using a welding tee, an integrally reinforced outlet fitting, or by welding the branch pipe directly to the main using a full-penetration weld.

When welding the branch directly to the main, the opening in the main for the branch pipe weakens the main, and the need for added reinforcement to replace the removed material must be evaluated. Reinforcement is *not* needed when

1. The branch connection is made using a fitting made to an ASME B16.9-listed standard
2. The branch connection is made using a threaded or socket-weld coupling not exceeding
    - ***a.*** NPS 2 (DN 50) or
    - ***b.*** One-fourth the nominal diameter of the main

    The coupling wall thickness should be not less than that of the branch pipe and welded to the main with a full penetration weld.
3. An integrally reinforced outlet fitting is used

Table C4.6 lists the maximum internal pressure permitted without reinforcement for various combinations of branch and main sizes for ASTM A53 Grade B and A106 Grade B pipe at 90° and 45° branch angles. For pressures higher than those listed, use a fitting or use the rules in ASME B31.1 for determining the required reinforcement and the method of application.

Closures and Blanks

Closures are made at the end of pipe runs using standard fittings such as caps, plugs, or blind flanges. A flat plate can also be used as a closure when it is welded to the pipe with a full penetration weld.

TABLE C4.6 Maximum Operating Pressures for Unreinforced Welded Branch Connections—Valid to 650°F—for ASTM A53, A135, and A106 Grade B Pipe. S = 15,000 psi

NPS (DN)		Standard weight pipe Pressure (psig)		Extra heavy pipe Pressure (psig)	
Main	Branch	90° branch	45° branch	90° branch	45° branch
3 (80)	2 (50)	842	713	1252	1076
4 (100)	3 (80)	720	620	1105	963
	2 (50)	723	613	1096	942
6 (150)	4 (100)	567	490	934	816
	3 (80)	583	502	955	831
	2 (50)	582	494	945	813
8 (200)	6 (150)	489	426	826	724
	4 (100)	503	435	830	724
	3 (80)	515	444	846	735
	2 (50)	513	437	835	719
10 (250)	8 (200)	443	387	667	586
	6 (150)	448	389	674	589
	4 (100)	458	396	674	587
	3 (80)	468	403	686	595
	2 (50)	465	398	674	580
12 (300)	10 (250)	385	336	544	477
	8 (200)	387	337	570	499
	6 (150)	390	339	574	501
	4 (100)	356	345	573	498
	3 (80)	406	350	582	504
	2 (50)	404	345	570	491
14 (350)	12 (300)	346	302	483	424
	10 (250)	352	307	498	436
	8 (200)	353	308	522	457
	6 (150)	356	309	525	459
	4 (100)	363	314	523	455
	3 (80)	371	319	531	461
	2 (50)	368	314	520	448
16 (400)	14 (350)	301	263	420	368
	12 (300)	304	266	426	373
	10 (250)	310	270	439	384
	8 (200)	311	270	460	403
	6 (150)	313	272	463	404
	4 (100)	319	276	460	400
	3 (80)	325	280	467	404
	2 (50)	322	275	456	393
18 (450)	16 (400)	265	231	369	323
	14 (350)	269	234	376	329
	12 (300)	272	237	381	333
	10 (250)	276	241	393	343
	8 (200)	277	241	412	360
	6 (150)	279	242	413	360
	4 (100)	284	246	411	357
	3 (80)	290	249	416	360
	2 (50)	287	245	406	350

TABLE C4.6 Maximum Operating Pressures for Unreinforced Welded Branch Connections—Valid to 650°F—for ASTM A53, A135, and A106 Grade B Pipe. S = 15,000 psi (*Continued*)

NPS (DN)		Standard weight pipe Pressure (psig)		Extra heavy pipe Pressure (psig)	
Main	Branch	90° branch	45° branch	90° branch	45° branch
20 (500)	18 (450)	236	206	329	288
	16 (400)	239	209	333	292
	14 (350)	243	212	340	297
	12 (300)	245	214	345	301
	10 (250)	249	217	355	310
	8 (200)	250	218	372	325
	6 (150)	251	218	373	326
	4 (100)	256	221	371	322
	3 (80)	261	225	376	325
	2 (50)	258	221	366	315
24 (600)	20 (500)	196	171	273	238
	18 (450)	198	173	276	241
	16 (400)	200	175	280	245
	14 (350)	203	177	285	249
	12 (300)	205	179	289	253
	10 (250)	209	182	298	260
	8 (200)	209	182	312	273
	6 (150)	210	182	313	273
	4 (100)	214	185	310	269
	3 (80)	218	188	314	272
	2 (50)	215	184	306	263

Notes: Pressures change directly with the ratio of SE to S.

1. For A53 Type F Butt Weld Pipe use a multiplier of 0.75.
2. If the branch opening in the main cuts the stem of pipe with a longitudinal weld, multiply table values by

Electric resistance weld pipe	0.85
Type F butt weld pipe	0.45

3. Based on the rules in B31.1.
4. A 12½ percent mill tolerance and a 1⁄32-in corrosion allowance have been used to calculate the pipe wall thickness for this table.
5. 1 in. = 25.4 mm.
6. For DN equivalents refer to Chap. A1 or App. E2.

The minimum thickness of the closure plate, *tc*, can be calculated by

$$t_c = d\sqrt{CP/S} + A \tag{C4.3}$$

where d = inside pipe diameter (in)
$C = 0.5t_m/T$, but not less than 0.3
t_m = minimum required pipe-wall thickness (in)
T = nominal wall thickness of pipe (in)
P = internal design pressure (psi)
S = maximum allowable stress of plate material (psi)

A blank can be installed between two flanges to close off a portion of a system. The minimum thickness of the blank, t_b, can be calculated by

$$t_b = d_g\sqrt{3P/16S} + A \tag{C4.4}$$

where d_g = inside diameter of the gasket (in)

When the blank is to be left in place during operation, use the same nomenclature as above. If the blank is to be used only during hydrostatic testing, P is the test pressure and S is 0.95 times the specified minimum yield strength of the blank material.

PIPE MATERIALS

Pipe, fittings, and valves suitable for building service piping systems are available in many different materials. A brief discussion of the advantages and disadvantages of commonly used materials follows.

Steel

Steel (ASTM A53, A106) is the most widely used material for pipe. Its advantages are strength, availability, and economy. Because of its wide use there is a large pool of skilled labor knowledgeable in its installation. The disadvantages of steel pipe are its weight and low resistance to corrosion.

Copper

Copper tube (ASTM B88) is widely used as a material for sizes up to 3 or 4 in. It is available up to 8 in and on order up to 12 in, but it is not usually economical in the larger sizes. ASTM B88 gives dimensions for copper tube up to NPS 12 (DN 300) but it is not commonly made. Refer to App. E3M.

The nominal sizes of copper tubing approximate the inside diameter. The outside diameter is always ⅛ in (3 mm) larger than the nominal size. Copper tube for refrigerant service (ACR tube) is referred to by its actual outside diameter.

Copper tube is furnished in two tempers—drawn and annealed. The pressure rating of annealed tube is about 60 percent of that of drawn tube. When joints are made by brazing, the tube in the vicinity of the joint becomes annealed and the annealed pressure rating should be used. Drawn tubing is used for most building applications. Drawn tubing has been work hardened and is furnished in straight lengths. In the annealed form the tube is soft and very easily bent. It is furnished in coils or straight lengths.

Copper pressure tube is furnished in three standard thicknesses which vary with the size. The heaviest is Type *K*, followed by Type *L* and Type *M*. All three are suitable, but Type *M* is thin walled and does not have mechanical strength and is therefore easily damaged.

The advantages of copper are its resistance to corrosion and the fact that it is light weight. It is not as strong as steel and not available in sizes over 12 in. Copper can readily be bent using bending tools which keep the tube from flattening. The disadvantages of copper as a material are its low strength compared to steel and its high cost. The high cost is offset in the smaller sizes by the ease of installation.

Red Brass Pipe

Red brass pipe (ASTM B43) is made up to NPS 12 (DN 300) for standard weight and NPS 10 (DN 250) for extra strong weight. Copper tube has largely replaced brass pipe for reasons of economy. It is made to steel pipe dimensions and is sometimes used where the added mechanical strength is needed.

Thermoplastics

Thermoplastics, which are discussed in detail in Part D of this handbook, are widely used for liquids with temperatures up to 100°F (38°C) for PVC and 180°F (82°C) for CPVC. These plastics have exceptional resistance to corrosion, are light weight, easy to install, and readily available and economical. The disadvantages of thermoplastics are lower strength, which necessitates short hanger spans, high coefficients of expansion, which must be compensated for when using long straight runs of pipe, and the emission of toxic fumes under fire conditions. Fire codes in some locations do not permit the use of some plastic materials.

PVC pipe can be used as underground pressure pipe as well as for aboveground service.

Thermosetting Resins

Thermosetting resins are used for reinforced thermosetting resin pipe (RTPP), also called fiberglass reinforced plastic (FRP) pipe. This pipe is made in larger sizes and can be used at higher pressures and temperatures than thermoplastics. It is suitable for aboveground or underground service. Refer to Part D, Chap. D2 of this handbook for more information. See manufacturers' data for specific ratings.

Ductile Iron

Ductile iron has replaced cast iron as water main pipe and is used for corrosion-resistant buried pipe. It is stronger and less brittle than cast iron. Ductile-iron pipe is made in standard thickness classes, the use of which is determined by the depth of bury and laying condition. This pipe is made in standard sizes from NPS 3 to NPS 54 (75 mm to 1350 mm).

Stainless Steel and Aluminum

Stainless steel and aluminum are expensive and therefore used only when corrosion resistance and strength are needed. Schedule 5S and Schedule 10S light-wall stainless pipe are commonly used to reduce cost.

Discontinued Pipe

Discontinued pipe materials, which are no longer made, are A72 wrought iron pipe, low-alloy (Yoloy) pipe, and ASTM A120 steel pipe.

PIPE FITTINGS AND JOINTS

Pipe joints fall into two basic categories—restrained and unrestrained. Restrained joints have inherent mechanical properties that prevent the joint from separating axially as well as containing the fluid. Unrestrained joints rely on packing to contain the fluid and the friction of the packing to keep the joints from separating. Systems with unrestrained joints must be provided with external restraint if they are to withstand pressure.

Bell and spigot piping is unrestrained. Mechanical joint and sleevetype couplings, which rely on a bolted gland retainer, are also unrestrained.

Threaded, flanged, and grooved joints are restrained. Welded, soldered, brazed, flared, and compression joints are considered to be restrained but are dependent on the skill of the assembler.

Some of the fittings discussed here are also made for higher pressures and temperatures than those mentioned.

Steel Pipe

Steel pipe is joined by threading, welding, or grooving. Threaded fittings are made of cast iron, malleable iron, ductile iron, and forged steel for joining pipe up to NPS 8 (DN 200). It is an industry standard, however, to change to welding or grooving at sizes above NPS 2 (DN 50). Threaded joints are made using ASME B1.20.1 standard taper pipe threads. Pipe lighter than standard weight must not be threaded.

Cast iron threaded fittings (ASME B16.4) are made in Class 125 (standard) and Class 250 (extra heavy) and are used in most threaded applications. Cast iron is brittle, so if ductility or higher strength is required malleable- or ductile-iron fittings should be used.

Malleable-iron threaded fittings (ASME B16.3) are made in Classes 150 and 300 and are stronger and less brittle than cast iron. Care must be taken when threading steel pipe into Class 150 malleable-iron fittings. The joint can be overtightened since the malleable fitting will stretch. Two threads should be exposed on the pipe when the joint is properly made up.

Ductile-iron threaded fittings are made in Class 300 and fall between the Class 150 and 300 malleable-iron fittings in strength. There is no listed ASTM standard for ductile-iron threaded fittings.

Forged-steel threaded fittings (ASME B16.11) are made in smaller sizes and have high pressure-temperature ratings. They are used primarily for high-pressure steam.

Welding is normally used to join steel pipe from NPS 2 ½ (DN 65) and up. Welding fittings (ASME B16.9) are made to match steel-pipe diameters and wall thicknesses. They are furnished with a standard bevel end for butt welding to the pipe. Weld fittings have the same pressure-temperature ratings as the equivalent thickness scamless pipe.

For smaller sizes, forged steel socket-weld fittings (ASME B16.11) can be used for high-pressure service.

Properly made welded joints are as strong as the pipe, do not deteriorate, and have a smooth inside contour to minimize friction losses.

Flanges are used in large piping to connect to valves and equipment and to provide a means of disassembly in welded piping systems. Flanges are made of cast iron, ductile iron, bronze, and steel.

Cast-iron threaded flanges and flanged fittings (ASME B16.1) are available in Classes 125 and 250. Ductile-iron threaded flanges and flanged fittings (ASME B16.42) are made in Classes 150 and 300. Threaded flanges are used for mounting equipment and valves in larger sized threaded pipe systems.

Class 125 cast-iron flanges have a flat face and are often mated to Class 150 steel flanges which have a raised face. Great care must be taken in tightening the bolts to avoid cracking the cast-iron flange. The steel flanges can be ordered with the raised face removed by machining.

Steel flanges (ASME B16.5) are made in Classes 150 and 300 for the services discussed in this chapter. They are available for higher pressures up to Class 2500. Steel flanges are generally used in welded piping systems. These flanges are made in weld neck, slip-on, and socket weld configurations. Classes 150 and 300 have a raised face.

Gasket material (ASME B16.21) should be suitable for the fluid and pressure to be contained. Full-face gaskets are used for flat-faced flanged joints and ring gaskets are used in raised-face joints. The flange bolts should be suitable for the pressure and flange facings.

Grooved pipe–joining systems are made by several manufacturers, but as yet there is no ASME standard for dimensions or pressure ratings. All the leading manufacturers use the same "standard" cut-groove and roll-groove dimensions. The joint consists of a circumferential groove cut into the outside of each pipe, close to the end to be joined. A coupling with continuous internal ridges engages the grooves in the pipe, and a gasket inside the coupling is expanded by the pressure in the pipe and seals against the pipe and coupling.

Grooves can be rolled into standard weight and lighter steel pipe. Cut grooves can be used on standard weight and thicker pipe. Gaskets are available for a great variety of liquids and gases.

These systems are extremely versatile and offer many advantages. They are easy to install, have inherent expansion compensation and flexibility, and are easy to disassemble. Grooved systems are not recommended for steam.

Copper Tube

Copper tube is joined by soldering or brazing using solder joint fittings (ASME B16.18, B16.22) or using flare (ASME B16.26) or compression fittings. Solder joints are also referred to as sweat joints.

Solder (ASTM B32) is defined as a filler metal whose melting point does not exceed 800°F (427°C). Brazing filler metals (ANSI/AWS A5.8) are specified as those whose melting points are 1000°F (538°C) or higher. Soldered and brazed joints rely on capillary attraction to draw molten filler metal into the gap between the socket on the fitting end and the tube.

The strength of the joint depends upon the composition of the solder used. Brazing provides much stronger joints than soldering but anneals drawn tubing in the vicinity of the joint. It is against the law to use solders containing lead for

TABLE C4.7 Pressure Ratings of Copper Tube Joints*

		Tube size, Types *K*, *L*, and *M* (in)					
Solder or brazing alloy used in joints	Service temperature (°F max.)	Water, noncorrosive liquids and gases					Steam
		¼–1	1¼–2	2½–4	5–8†	10–12†	All
50–50	100	200	175	150	130	100	—
Tin-lead	150	150	125	100	90	70	—
Solder	200	100	90	75	70	50	—
ASTM B32 Gr 50A‡	250	85	75	50	45	40	15
95–5	100	500	400	300	270	150	—
Tin-antimony	150	400	350	275	250	150	—
Solder	200	300	250	200	180	140	—
ASTM B32 GR 95TA	250	200	175	150	135	110	15
Brazing alloys	200	§	§	§	§	§	—
ANSI/AWS A5.8	250	300	210	170	150	150	—
(melting above 1000°F)	350	270	190	150	150	150	120

* Ratings for solder joints are from ASME B16.22 and B16.18. Ratings for brazed joints and steam are from *The Copper Tube Handbook,* published by the Copper Development Association, Inc.

† B31.9 prohibits compressed air or other gases above 20 psig in these sizes.

‡ It is prohibited by law to use lead solder for potable water.

§ The pressure rating of the tube determines the strength of this joint.

Note: 1.8 °C = °F − 32.

drinking water–piping systems, but they can be used for heating, cooling, and other building-service applications. Table C4.7 gives working pressures for copper-tube joints made by soldering and brazing.

Flared and compression-type fittings are made by many manufacturers for copper, steel, stainless steel, and aluminum tubing. Fittings are available for sizes NPS 2 (DN 50) and under but are used primarily in sizes NPS 1 (DN 25) and under. These joints can be taken apart and reassembled with ease. The manufacturers' catalogs give pressure ratings which can be as strong as the tube being joined.

Grooved-joint couplings and fittings are made to match copper-tube sizes. Since tube walls are thin, roll grooving is used.

Bronze pipe flanges and flanged fittings (ASME B16.24) are made in Classes 150 and 300 and can be used to join copper tube to flanged valves or equipment.

Red Brass Pipe

Red brass pipe is joined in the smaller sizes using cast-bronze threaded fittings (ASME B16.15) which are made in Classes 125 and 250. ASME B16.24 flanges as mentioned above can be used for sizes above NPS 2 (DN 50).

Plastics

Plastic piping is the subject of Part D of this handbook. To aid those reading this chapter, a brief summary of joining methods and fittings is given here.

Solvent cementing is the most common method used for joining PVC (ASTM D2564, D2855), CPVC (F493) pipe, and ABS (D2235). Socket-type fittings are available in Sch 40 (PVC-ASTM D2466, CPVC-ASTM F438) and Sch 80 (PVC-ASTM D2467, CPVC-F439) for pressure systems to at least NPS 8 (DN 200). Check on availability before deciding to use larger sizes. Solvent cement joints are best made when the ambient temperature is between 40 and 100°F (4°C and 38°C).

Threaded fittings up to NPS 4 (DN 100) are available for PVC (ASTM D2464) and CPVC (ASTM F437) piping systems. Only Sch 80 pipe should be threaded, and its pressure rating should be reduced by 50 percent. This type of joint can be taken apart and reassembled.

Flanges are available with solvent cement sockets up to NPS 8 (DN 200) and are made to Class 125 dimensions. Threaded flanges are made up to NPS 4 (DN 100). Flanges can be installed in cemented systems for ease in disassembly. An ASTM standard for thermoplastic flanges has yet to be developed.

Heat joining methods are also available for certain polyolefin joints (ASTM D2657), particularly for polypropylene. Pipe and fittings of this plastic are used for acid-resistant drainage systems. A wire filament is embedded in the socket of the joint then electrically heated with a special timing device to fuse the joint.

Bell and spigot PVC–pressure pipe (AWWA C900) is made for underground water mains. The bell is made to contain an elastomer gasket (ASTM F477), and the joint is assembled by pushing the spigot into the bell. RTRP can be joined using a special taper on the end of the pipe which can be cemented into a matching bell on a coupling or fitting. Refer to Part D of this handbook.

Mechanical joint fittings (AWWA C110/ANSI A21.10) of ductile or cast iron can be used with PVC or RTRP pipe made to AWWA ductile-pipe dimensions (AWWA C151/ANSI A21.51).

Ductile Iron

Ductile iron pipe is used primarily for underground systems. Fittings are rated in pressure classes (AWWA C110/ANSI A21.10).

Bell and spigot fittings are available and made of cast or ductile iron with bell ends. Pipe is made with one end belled. An elastomer gasket fits into a special groove in the bell, and the plain end of the pipe to be joined is pushed into the bell. This can be difficult with large pipe.

Mechanical joint fittings made from cast or ductile iron are available and are easier to work with in larger pipe sizes. The pipe is assembled into the bell before the gasket is in place, which reduces the friction. The gasket is then slid into the bell and a retainer ring is bolted into place to secure the gasket.

Grooved couplings are available and made to fit AWWA ductile-iron pipe diameters (AWWA C151/ANSI A21.51) from NPS 3 to NPS 36 (DN 80–DN 900). Special cut grooves are needed on the pipe. Grooved fittings are not made. Bell and spigot or mechanical joint fittings can be used.

Stainless Steel and Aluminum

Stainless steel and aluminum pipe and fittings are joined using the same methods as those for steel. The availability of fitting sizes is limited and should be investigated before using them in design.

TABLE C4.8 Material Application Chart for Saturated Steam and Condensate*†

	Pipe						Fitting					Valve				
Line	Material	ASTM standard	Mfr. process	Weight	Joint	Pressure rating (psig)	Class	Material	Joint	ASTM standard	Pressure rating (psig)	Class	Material	Joint	Type	Pressure rating (psig)
	Low pressure to 15 psig; Medium pressure 16–90 psig															
A. (1)	Steel	A 53 B	Type F(CW)	Std.	Thread	230	125	Cast iron	Thread	B 16.4	125	125	Bronze	Thread	Gate	140
(2)	Steel	A 53 B	Seamless	Std.	Thread	510	300	Ductile iron	Thread	—	430		Bronze	Thread	Ball	150
(3)	Copper	B 88	Drawn	Type L	95-5 Solder	15		Wrought copper	95-5 Solder	B 16.22	15					
(4)	Copper	B 88	Drawn	Type K	Braze	120		Wrought copper	Braze	B 16.22	120					
	NPS 2½–12															
B. (1)	Steel	A 53 B	ERW	Std.	Weld	530	Std	Wrought steel	Weld	B 16.9	580	125	Cast iron	Flange	Gate	150
(2)							150	Wrought steel	Flange	B 16.5	150		Steam trim	Wafer	Butter-fly	150
(3)								Std ERW steel	90° weld branch		375					
	NPS 14–20															
C. (1)	Steel	A 53 B	ERW	Std.	Weld	335	Std	Wrought steel	Weld	B 16.9	395	125	Cast iron	Flange	Gate	100
(2)							150	Wrought steel	Flange	B 16.5	150	150	Ductile iron	Flange	Gate	208
(3)								Std ERW steel	90° weld branch		230		Steam trim	Lug wafer	Butter-fly	150

TABLE C4.8 Material Application Chart for Saturated Steam and Condensate*† (*Continued*)

	Pipe						Fitting					Valve				
Line	Material	ASTM standard	Mfr. process	Weight	Joint	Pressure rating (psig)	Class	Material	Joint	ASTM standard	Pressure rating (psig)	Class	Material	Joint	Type	Pressure rating (psig)
	High pressure 91 to 150 psig at 366°F															
	NPS 2 & smaller															
D. (1)	Steel	A 53 B	ERW	Std.	Thread	645	250	Cast iron	Thread	B 16.4	250	200	Bronze	Thread	Gate	275
(2)		A 53 B	Seamless	XS	Thread	1215	300	Ductile iron	Thread	—	415	300	Bronze	Thread	Gate	410
(3)		A 106 B	Seamless	Std	Socket weld	1385	3000	Forged steel	Socket weld	B 16.11	2600					
(4)	Copper	B 88	Drawn	Type K	Braze	120		Wrought copper	Braze	B 16.22	120	800	Forged steel	Socket weld	Gate	1710
	NPS 2½–12															
E. (1)	Steel	A 53 B	ERW	Std	Weld	530	Std	Wrought steel	Weld	B 16.9	580	250	Cast iron	Flange	Gate	315
(2)		A 53 B	Seamless	Std	Weld	620	300	Wrought steel	Flange	B 16.5	300	150	Ductile iron	Flange	Gate	204
								Std SML steel	90° weld branch		440		Steam trim	Lug wafer	Butter-fly	200
	NPS 14–20															
F. (1)	Steel	A 53 B	ERW	Std	Weld	335	Std	Wrought steel	Weld	B 16.9	395	150	Ductile iron	Flange	Gate	204
(2)		A 53 B	Seamless	Std	Weld	395	300	Wrought steel	Flange	B 16.5	300		Steam trim	Lug wafer	Butter-fly	200
(3)		A 53 B	Seamless	XS	Weld	560		Std ERW steel	90° weld branch		230					
(4)								XH SML steel	90° weld branch		360					

* Pressure ratings for steel pipe are calculated using a mill tolerance of −12.5 percent of the wall thickness, the thread or groove depth, a corrosion allowance of 0.025 in for pipe to NPS 2, and 0.065 in for 2½-in and larger pipe. No pipe reinforcement value is applied for the strength of threaded fittings or grooved couplings.

† Pressure ratings are for the highest temperature and largest pipe size in each group. Higher ratings can be found for lower temperatures and smaller pipe sizes.

TABLE C4.9 Material Application Chart for Water Systems*,†,‡

	Pipe								Fitting	
						Pressure rating				
Line	Material	ASTM standard	Mfr. process	Wall thickness	Joint	@ 75°F (psig)	@ 150°F (psig)	@ 220°F (psig)	Material	Class
	In the building or above ground									
	NPS 2 and smaller									
G. (1)	Steel	A 53 B	Type F(CW)	Std.	Thread	230	230	230	Cast iron	125
(2)	Steel	A 53 B	Type F(CW)	Std.	Groove	275	275	275	D.I. or M.I.	
(3)	Steel	A 53 B	Type F(CW)	Sch 10	Roll groove	400	400	400		
(4)	Copper	B 88	Drawn	Type L	95-5 solder	400	350	220	Wrought copper	
(5)	Copper	B 88	Drawn	Type K	Braze	380	380	300	Wrought copper	
(6)	Steel	A 53 B	Seamless	Std	Thread	510	510	510	Cast iron	250
(7)	Steel	A 53 B	Seamless	Std	Groove	605	605	605	Malleable iron	150
(8)	CPVC	F441	Seamless	Sch 40	Solvent	280	125	NR	CPVC	Sch 40
	NPS 2½–12									
H. (1)	Steel	A 53 B	ERW	Std	Weld	530	530	530	Wrought steel	Std
(2)	Steel	A 53 B	ERW	Std	Groove	310	310	310	D.I. or M.I.	
(3)	Steel	A 53 B	Seamless	Std	Weld	620	620	620	Cast iron	125
(4)	Steel	A 53 B	Seamless	Std	Groove	365	365	365	Wrought steel	150
(5)									Std ERW steel unreinforced 90° weld branch	
(6)									Wrought steel	300
(7)	Copper	B 88	Drawn	Type *L*	95-5 solder	150	150	130	Wrought copper	
(8)	Copper	B 88	Drawn	Type *L*	Braze	260	220	190	Wrought copper	
(9)	Copper	B 88	Drawn	Type *K*	Braze	380	320	285		
(10)	Copper (to 6 in)	B 88	Drawn	Type *L*	Roll groove	300	300	300	Wrought copper	(to 6 in)
(11)	CPVC	F 441	Seamless	Sch 40	Solvent	130	70	NR	CPVC (to 6 in)	Sch 40
(12)	CPVC	F 441	Seamless	Sch 80	Solvent	230	105	NR	CPVC (to 6 in)	Sch 80
	NPS 14–20									
I. (1)	Steel	A 53 B	ERW	Std	Weld	335	335	335	Wrought steel	Std
(2)	Steel	A 53 B	ERW	Std	Groove	195	195	195	D.I. or M.I.	
(3)	Steel	A 53 B	Seamless	Std	Weld	395	395	395	Cast iron	125
(4)	Steel	A 53 B	Seamless	Std	Groove	230	230	230	Wrought steel	150
(5)									Std ERW steel unreinforced 90° weld branch	
(6)									Wrought steel	300

MATERIAL SELECTION

The selection of the material to be used for each system is based on an evaluation of the following factors:

1. Requirements and limitations of the building and piping codes
2. The fluid in the pipe
3. The pressure and temperature of the fluid in the pipe
4. The location and external environment of the pipe

Fitting					Valve						
		Pressure rating							Pressure rating		
Joint	ASTM standard	@ 75°F (psig)	@ 150°F (psig)	@ 220°F (psig)	Class	Material	Type	Joint	@ 75°F (psig)	@ 150°F (psig)	@ 220°F (psig)
Thread	B 16.4	175	175	160	125	Bronze	Gate	Thread	200	200	180
Groove	—	500	500	500		Bronze	Ball	Thread	400	400	400
95-5 solder	B 16.22	375	320	220		Bronze	Ball	95-5 solder	400	350	220
Brazed	B 16.22	445	375	310	200	Bronze	Gate	Thread	400	400	365
Thread	B 16.4	400	400	360							
Thread	B 16.3	300	300	255							
Solvent	F 438	280	125	NR		CPVC	Ball	Socket	150	100	NR
Weld	B 16.9	510	510	510	125	Cast iron	Gate	Flange	150	150	130
Groove	—	500	500	500	150	Ductile iron	Gate	Flange	250	250	230
Flange	B 16.1	200	200	180	250	Cast iron	Gate	Flange	500	500	445
Flange	B 16.5	285	270	250		Buna-N liner	Butterfly	Wafer	150	150	NR
		375	375	375		EPDM liner	Butterfly	Wafer	150	150	150
Flange	B 16.5	720	710	695		Hi-service	Butterfly	Lug	250	250	250
95-5 solder	B 16.22	150	150	130							
Braze	B 16.22	380	320	285	200	Cast iron	Plug	Flange	200	200	180
					500	Cast iron	Plug	Flange	500	500	445
Roll groove	—	300	300	300							
Solvent	F 438	180	80	NR							
Solvent	F 439	280	125	NR							
Weld	B 16.9	400	400	400	125	Cast iron	Gate	Flange	150	150	130
Groove	—	300	300	300	150	Ductile iron	Gate	Flange	250	250	230
Flange	B 16.1	150	150	130	250	Cast iron	Gate	Flange	300	300	275
Flange	B 16.5	275	255	235		Buna-N liner	Butterfly	Wafer	150	150	NR
		230	230	230		EPDM liner	Butterfly	Wafer	150	150	150
Flange	B 16.5	720	710	695		Hi-service	Butterfly	Lug	250	250	250

5. Availability of the material
6. The expected life of the facility where the system is to be installed
7. The installed cost of the system

The first four factors relate to safety and are of primary importance. The last three are related to the economics of the project and are weighted to suit.

Steam and Condensate Systems (to 150 psig) (1035 kPa)

Steel pipe is used for steam and condensate systems. Fittings for sizes under NPS 2½ (DN 65) are threaded cast iron. Larger fittings are steel with welding ends.

TABLE C4.9 Material Application Chart for Water Systems*,†,‡ (*Continued*)

Line	Pipe								Fitting	
						Pressure rating				
Line	Material	ASTM standard	Mfr. process	Wall thickness	Joint	@ 75°F (psig)	@ 150°F (psig)	@ 220°F (psig)	Material	Class
	Below gound (Corrosion protected materials from lines G, H, I may be used underground.)									
	NPS 4–20									
J. (1)	Ductile iron	A 21.51	Cast	Class 50	Mech. jt.	300	300	—	Ductile iron	Class B
(2)	Ductile iron	A 21.15	Cast	Class 50	Flange	250	250	—	Ductile iron	Class B
	NPS 2–16							@ 210°F		
K. (1)	RTRP-11AF	D 2996	Fil. wound	—	B&S adhesive	150	150	150	RTRP-11AF	
	NPS 4–24						@ 100°F			
L. (1)	PVC	AWWA C900	Seamless	Class 100	B&S O-ring	100	60	NR	Ductile iron	Class B
(2)	PVC	AWWA C900	Seamless	Class 150	B&S O-ring	150	90	NR		
(3)	PVC	AWWA C900	Seamless	Class 200	B&S O-ring	200	120	NR		

* Pressure ratings for steel pipe are calculated using (a) a mill tolerance or −12.5% of the wall thickness, (b) the thread or groove depth where used, and (c) a corrosion allowance of 0.025 to NPS 2 and 0.065 for NPS 2½ and larger. No pipe-wall reinforcement value is applied for the strength of threaded fittings or grooved couplings.

† Copper tube pressures are based on the joint strength when soldered or brazed.

‡ Pressure ratings are for the largest pipe size in each group. Smaller pipe sizes have higher ratings.

Bronze valves are used for small sizes and cast or ductile iron, as required by the pressure, for valves NPS 2½ (DN 65) and over. Large gate valves in high-pressure systems should be provided with a bypass to allow warm-up of the downstream pipe before full opening. Equalizing the pressure with a bypass also allows the valve to open.

Ball valves and special steam butterfly valves may be used, but only if the valve has a gear operator so it cannot be opened rapidly. Ball valves can be used for small valves on low-pressure systems.

Copper tubing with brazed joints may be used up to 120 psig (827 kPa). The high energy content of steam makes mechanically restrained joints preferred. However, when space is limited, copper tubing with wrought brazed fittings, which is a much less bulky system than steel, can be used. Welding and brazing should be performed by qualified operators.

Steam condensate piping requires additional attention, since condensate corrodes steel pipe. To lengthen the life of small size pipe, extra heavy weight pipe is often specified. For larger pipe sizes, the increased wall thickness of standard weight pipe provides added material to prolong pipe life. For small low-pressure systems, copper tube with 95-5 solder joints may be used. Fittings and valves for condensate are the same as those used for steam.

Table C4.8 shows some of the materials which can be used for steam and condensate service. Code pressure ratings for the various components or joints are

Fitting					Valve						
		Pressure rating							Pressure rating		
Joint	ASTM standard	@ 75°F (psig)	@ 150°F (psig)	@ 220°F (psig)	Class	Material	Type	Joint	@ 75°F (psig)	@ 150°F (psig)	@ 220°F (psig)
Mech. joint	A 21.10	350	350	350	Same as listed in H and I above.						
Flange	A 21.10	250	250	—							
B&S or T.A.B.		150	150	@ 210°F 150	Same as listed in H and I above.						
Mech. joint	A 21.10	350	350	350	Same as listed in H and I above.						

listed. The table should not be read line by line. For example, any of the fittings and valves listed on lines D(1)–(4) may be used with any of the pipe types listed on lines D(1)–(3).

Recirculating Water Piping Systems

Closed recirculating water systems such as chilled water, hot water, and dual temperature water are used for heating and cooling. System temperatures can range from 50 to 200°F (10 to 93°C) and the pressure can be above 200 psig (1380 kPa) on the lower floors of tall buildings.

For pipe NPS 2 ½ (DN 65) and larger the preferred material is steel with welded or grooved joints. The selection of materials for water piping systems NPS 2 (DN 50) and under is usually based on economics. The fluctuating price of materials and the skills of the labor to be used for installation make a number of combinations possible. For pressures above 150 psig (1035 kPa) and temperatures above 200°F (93°C), seamless or extra strong steel pipe with the proper class of threaded fittings or grooved joints can be used. Copper tube with solder or brazed joints is also widely used. For low temperatures, plastic piping systems can be used.

Bronze gate and ball valves are used on small pipe systems, and cast-iron gate, plug, and butterfly valves are used with large pipe.

Table C4.9 lists materials for pipe, fittings, and valves and gives pressure ratings at 75, 150, and 220°F (24, 65, 104°C). The rating at 75°F (24°C) can be used down to 0°F (−17°C). Materials within any letter group can be mixed when a suitable joint can be made.

TABLE C4.10 Material Application Chart for Air, Gas, and Oil Systems*,†,‡

	Pipe								Fitting	
						Pressure rating				
Line	Material	ASTM standard	Mfr. process	Wall thickness	Joint	@ 75°F (psig)	@ 150°F (psig)	@ 220°F (psig)	Material	Class
	Compress air to 20 psig									
	NPS 2 and smaller									
O. (1)	Same materials as listed in Table C4.9 lines G(1) through (7).									
	NPS 2½–12									
M. (1)	Same materials as listed in Table C4.9 lines H (1) through (6), (8), and (9).									
	Compressed air to 100 psig									
	NPS 2 and smaller									
N. (1)	Same materials as listed in Table C4.9 lines G (1) through (3) and (5) through (7).									
(2)	Line (7), copper with solder joints may be used at or below NPS 4.									
	NPS 2½–12									
O. (1)	Same materials as listed in Table C4.9 lines H (1) through (6) and (8) through (10).									
O. (1)	Same materials as listed in Table C4.9 lines H (1) through (6) and (8) through (10).									
	Fuel gas to 5 psig									
P. (1)	NPS 2 and smaller									
(2)	Steel	A 53 B	ERW	Std	Thread	430	430	430	Malleable iron	150
(3)	Steel	A 106	Seamless	Std	Thread	510	510	510	Ductile iron	300
(4)	Steel tube	A539, A254			Braze	Use mfrs. rating				
(5)	Copper tube	B 88		Type L, K	Braze, flare	315	315	260	Wrought copper	
(6)	Corrugated S.S. Conduit AGA 1-87				System	Use mfrs. rating				
	NPS 2½–6									
Q. (1)	Steel	A 53	ERW	Std	Weld	695	695	695	Wrought steel	Std
(2)	Steel	A 106	Seamless	Std	Weld	815	815	815	Wrought steel	150
	Fuel oil									
	NPS 2 and smaller									
R. (1)	Steel	A 53	Seamless	XH	Thread	1215	1215	1215	Malleable iron	150
(2)	Steel	A 106	Seamless	XH	Thread	1215	1215	1215	Ductile iron	300
(3)	Steel tube	A539, A254			Braze				Forged steel	3000
	NPS 2½–12									
S. (1)	Steel	A 53	Seamless	Std	Weld	620	620	620	Wrought steel	Std
(2)	Steel	A 106	Seamless	Std	Weld	620	620	620	Wrought steel	150

* Pressure ratings for steel pipe are calculated using (a) a mill tolerance or −12.5% of the wall thickness, (b) the thread or groove depth where used, and (c) a corrosion allowance of 0.025 in to NPS 2 and 0.065 for NPS 2½ and larger. No pipe-wall reinforcement value is applied for the strength of threaded fittings or grooved couplings.

† Copper tube pressures are based on the joint strength when soldered or brazed.

‡ Pressure ratings are for the largest pipe size in each group. Smaller pipe sizes have higher ratings.

Condenser Water Systems

Refrigeration condenser water is usually cooled in a cooling tower where the water temperature is reduced by evaporation to the atmosphere. Lake, river, and well water are also used for condensing refrigerant. As oxygen and atmospheric contaminants are regularly induced into the water, corrosion becomes a major problem.

When a cooling tower is used, the same water plus makeup water are recirculated and chemicals must be added to the system to protect the pipe against corrosion.

Fitting					Valve						
		Pressure rating							Pressure rating		
Joint	ASME/ ASTM standard	@ 75°F (psig)	@ 150°F (psig)	@ 220°F (psig)	Class	Material	Type	Joint	@ 75°F (psig)	@ 150°F (psig)	@ 220°F (psig)
Thread	B 16.3	300	300	255	125	Bronze	Gate	Thread	200	200	180
Thread	A 395	500	500	460		Bronze	Ball	Thread	400	400	400
Brazed	B 16.22										
Weld	B 16.9	510	510	510	125	Cast iron	Gate	Flange	150	150	130
Flange	B 16.5	285	270	250	150	Ductile iron	Gate	Flange	250	250	230
					200	Cast Iron	Plug	Flange	200	200	180
Thread	B 16.3	300	300	255	125	Bronze	Gate	Thread	200	200	180
Thread	A 395	500	500	460		Bronze	Ball	Thread	400	400	400
Socket weld	B 16.11	2600	2600	2600							
Weld	B 16.9	510	510	510	150	Ductile iron	Gate	Flange	250	250	230
Flange	B 16.5	285	270	250							

With river water or well water, corrosion-resistant materials must be used for the system or the interior of the pipe must be lined with a corrosion-resistant material. Refer to Chaps. B9, B10, B11, and B12 for lined piping systems.

Steel pipe is most often used for large condenser-water piping systems aboveground. Where chemical treatment is possible it does not have to be lined, but the use of extra heavy pipe should be considered. Where chemicals cannot be used, steel pipe can be cement lined using welded or grooved joints. Plastic lining can also be used with grooved joints (Refer to Chap. B12). Linings do not add to the strength of the pipe and may reduce the flow capacity.

Condenser-water lines are often run below ground. Ductile-iron or plastic water-main pipe can be used, since both the interior and exterior are corrosion resistant. Copper is a good alternative for both aboveground and underground condenser-water piping. Table C4.9 lists some materials suitable for condenser water and the pressures at which they can be used.

Compressed Air

High temperatures are not usually involved, but compressed air contains stored energy, and system failure can result in explosive reactions. Welding or a restrained joint should be used for large sizes. Do not use PVC or CPVC or any material subject to brittle failure for compressed air. Other thermoplastics which are not subject to brittle failure may be used. Check with the manufacturer of the material to be sure it is recommended for compressed air service.

Steel and copper pipe with malleable iron, cast-iron, or copper fittings are suitable materials for compressed air. Ball, butterfly, or gate valves can be used. For large sizes use welded, flanged, or grooved systems. ASME B31.9, Building Services Piping, does not permit the use of copper with soldered joints for sizes above NPS 4 (DN 100) size at pressures exceeding 20 psig (138 kPa). Table C4.10 lists some suitable materials.

Fuel Gas

Pipe material for use in buildings should be standard weight, electric resistance weld, or seamless steel or copper tube Type *K* or *L*. Copper is not to be used if the gas contains more than an average of 0.3 grain of hydrogen sulfide per 100 standard cubic feet of gas. Fittings for steel pipe may be threaded malleable iron or ductile iron for sizes up to and including NPS 3 (DN 80). Some jurisdictions require cast fittings to be galvanized to seal casting-pin holes. For sizes NPS 2½ (DN 65) and over, welded joints should be used with steel fittings and flanges.

Copper tube should be joined by brazing, using a brazing alloy that does not contain phosphorus, or by the use of flared connections. Table C4.10 lists some suitable materials.

Fuel Oil

For piping to boilers operating at or under 15 psig (103 kPa) steam or 30 psig (207 kPa) water, use electric-resistance welded, seamless steel pipe, or copper tube, Type *K* or *L*. When threaded joints are used, malleable-iron, ductile-iron, or forged-steel fittings may be used. A thread-sealing compound suitable for oil should be used when making the joints. Joints in copper tube may be brazed or made by using flared or compression fittings.

Oil piping to boilers operating at steam pressures from 16 to 150 psig (110 to 1035 kPa) should be seamless steel, standard weight, when welded or extra strong if threaded. Threaded joints using ductile-iron or forged-steel fittings may be used if unavoidable. Valves should be made of ductile iron or brass.

Outside the boiler room malleable-iron threaded fittings may be used. Type *K* or *L* copper tube with brazed joints may also be used outside the boiler room. Table C4.10 lists some suitable materials.

WELDING

Welding Qualification

To comply with the B31 Pressure Piping Code sections, all welding procedures and welders must be qualified as required by Sec. IX of the ASME Boiler and Pressure Vessel Code. B31.9, Building Services Piping, also permits qualification to AWS D10.9, Qualification of Welding Procedures and Welders for Piping and Tubing.

A welding procedure specification is written to outline a method for making a weld. It lists the conditions under which the weld must be made. The procedure is qualified by making a weld following the specification. If the weld passes the prescribed tests, the procedure is qualified as being able to make a sound weld.

Welders and welding operators are tested to see that they have the necessary skills by making a weld using a qualified weld procedure specification. If the weld passes the required test, the welder can be termed qualified by his employer.

Boiler External Piping

For boilers operating at pressures higher than 15 psig (103 kPa), the ASME Boiler and Pressure Vessel Code has administrative control over the welding on boiler external piping (BEP), which is broadly defined as the piping between the boiler and (1) the first steam stop valve, (2) the second feedwater valve, and (3) the second blowdown valve. When multiple boilers are connected to a header, the BEP extends to the second steam valve.

The boiler external piping must be fabricated and installed by an organization holding an ASME certificate and must be provided with data reports, inspection, and stamping as required by the boiler code.

The ASME Pressure Piping Code B31.1, Power Piping, does not require nondestructive examination of welds unless the pressure is above 1025 psig (7067 kPa) with a temperature above 350°F (177°C) or the temperature is above 750°F (400°C) at all pressures. If radiography or other nondestructive examination is desired in excess of code requirements, it should be clearly spelled out in the contract or specification.

HANGERS AND SUPPORTS

This section gives a brief outline of the use of hangers, supports, anchors, and guides. See Part B of this handbook for a detailed discussion of hangers and hanger loads.

Hangers support the pipe from above; supports bear the load of the pipe from below; anchors restrain pipe movement; guides allow only axial movement of the pipe and direct expansion forces.

Buildings are built to provide usable floor space; therefore, piping is usually hung from the structure above. Hangers are concentrated loads; an allowance of extra distributed–dead load in the structure above mechanical rooms will not necessarily be sufficient to support the point loads of large pipelines or suspended equipment. Piping should be arranged to allow the use of major structural elements for hanging pipelines. Major loads that pipe hangers impose on a structure should be reviewed by a structural designer.

Hanger loads are calculated according to B31.9 by taking the following elements into account:

1. The dead weight of the pipe, fittings, valves, insulation, and the hanger itself.
2. The weight of liquid in the pipe.
3. Occasional loads, such as ice, wind, earthquake, a test liquid, and water hammer. Occasional loads need not be considered as acting concurrently.

The forces acting on pipe anchors are

1. The hanger loads listed above.
2. Forces caused by expansion and contraction of the pipe.
3. Expansion joint forces needed to overcome joint friction and separation. The separation force is the product of the line pressure and the largest inside cross-section area of the joint.

When supporting a riser, the entire weight of the riser pipe and the fluid or test liquid in that vertical section of the pipe must be carried by the base elbow or anchor.

Hanger design is based on using one-fifth of the minimum tensile stress of the hanger material. If the minimum tensile strength of a material is not known, a value of 9500 (65 MPa) psi may be used. During hydrostatic testing this value may be increased to 24,000 (165 MPa) psi. Allowable stress values for shear are 80 percent and for bearing are 160 percent of the values determined above.

The carrying capacity of threaded rod is based on the rod area at the root of the thread. The allowable stress is reduced by 25 percent for cut threads. See Table C4.11 for rod-carrying capacities.

TABLE C4.11 Capacities of Threaded Steel Rods

Rod diameter (in)	Root area of thread (in^2)	Unknown steel rolled threads, $S = 9.5$ ksi (lb)
¼	0.027	260
⅜	0.068	650
½	0.126	1200
⅝	0.202	1900
¾	0.302	2900
⅞	0.419	4000
1	0.551	5200
1⅛	0.693	6600
1¼	0.889	8400
1⅜	1.054	10000
1½	1.294	12300

Hangers should be designed to permit vertical adjustment. When this is done with threaded elements, double nuts or other locking devices should be used to prevent vibration from working the nut loose.

Hangers are attached to the structure by welding, beam clamps, concrete inserts, and metal-deck inserts and by drilling expansion anchors directly into the concrete. Loads on inserts in, or attachments to, concrete should be limited to one-fifth of the ultimate strength of the attachment as determined by the manufacturer's tests.

TABLE C4.12 Pipe Spans for Standard Weight Steel Pipe for Straight Runs with No Valves or Components

	Pipe and insulation						Pipe, water, and insulation					
	ASTM A53 type F butt weld S = 11,250			ASTM A53B Smls or ERW S = 15,000			ASTM A53 type F butt weld S = 11,250			ASTM A53B Smls or ERW S = 15,000		
	Pressure in pipe			Pressure in pipe			Pressure in pipe			Pressure in pipe		
Pipe size NPS (DN)	300 psig (ft)	15 psig (ft)	Hanger load (lb)	400 psig (ft)	15 psig (ft)	Hanger load (lb)	300 psig (ft)	15 psig (ft)	Hanger load (lb)	400 psig (ft)	15 psig (ft)	Hanger load (lb)
½ (15)	6	6	5	6	6	5	6	6	6	6	6	6
¾ (20)	7	7	9	7	7	9	7	7	11	7	7	11
1 (25)	9	9	16	9	9	16	9	9	19	9	9	19
1¼ (32)	11	11	26	11	11	26	11	11	32	11	11	32
1½ (40)	12	12	34	12	12	34	12	12	45	12	12	45
2 (50)	14	14	56	14	14	56	13	14	75	14	14	77
2½ (65)	16	16	96	16	16	96	15	16	128	16	16	129
3 (80)	17	17	139	17	17	139	16	17	189	17	17	195
4 (100)	20	20	224	20	20	224	18	19	317	20	20	334
5 (125)				22	22	338				22	22	530
6 (150)				24	24	478				23	24	782
8 (200)				28	28	829				25	28	1431
10 (250)				31	31	1309				28	31	2369
12 (300)				34	34	1746				28	33	3301
14 (350)				36	36	2038				29	34	3929
16 (400)				38	38	2500				29	35	5015
18 (450)				40	40	2993				28	36	6223
20 (500)				43	43	3515				28	36	7561
24 (600)				46	47	4638				27	37	10603

1. Spans based on lesser of (1) half that permitted by allowable stress in simple beam formula or (2) deflection of 0.1 × NPS to 0.2 in max. for empty pipe and fiberglass insulation.

2. Formulas used: Deflection span, ft = $[(384\ EIG/W)^{0.25}]/12$. Simple beam span, (ft) = $[\{8Z(S - SL)/W\}^{0.5}]/12$, where E = modulus of elasticity, I = moment of inertia, G = permitted deflection, Z = section modulus, S = allowable stress, SL = longitudinal stress caused by pressure, W = weight.

3. Hanger loads listed are the full weight of the longer span in each category.

4. For DN equivalents refer to Chap. A1 or App. E2.

5. 1 psi = 6.895 kPa.

6. 1 lb = 2.24 kg.

TABLE C4.13 Pipe Spans for Copper Tube Type *L* for Straight Runs with No Valves or Components

	Pipe and insulation			Pipe, water, and insulation		
	ASTM B88 type *L* hard drawn S = 11,300 to 250°F			ASTM B88 type *L* hard drawn S = 11,300 to 250°F		
	Pressure in tube			Pressure in tube		
Nominal pipe size NPS (DN)	300 psig (ft)	15 psig (ft)	Hanger load (lb)	300 psig (ft)	15 psig (ft)	Hanger load (lb)
½ (15)	4	4	1	4	4	2
⅝ (18)	5	5	2	5	5	3
¾ (20)	5	5	3	5	5	4
1 (25)	7	7	6	7	7	8
1¼ (32)	8	8	8	8	8	13
1½ (40)	9	9	12	9	9	19
2 (50)	11	11	22	10	11	37
2½ (65)	12	12	33	10	12	56
4 (100)	14	14	52	12	13	88
3½ (90)	15	15	70	12	14	124
4 (100)	16	16	93	13	15	167
5 (125)	18	18	147	14	17	269
6 (150)	20	20	216	15	18	400
8 (200)	23	23	473	18	21	854
10 (250)	25	25	791	20	23	1480
12 (300)	28	28	1175	21	25	2214

1. Spans based on (1) lesser of half that permitted by allowable stress in simple beam formula or (2) deflection of 0.1 × NPS to 0.2 in max.

2. Formulas used: Simple beam span (ft) = $[\{8Z(S - SL)/W\}^{0.5}]/12$; Deflection span (ft) = $[(384\,EIG/W)^{0.25}]/12$, where E = modulus of elasticity, I = moment of inertia, G = permitted deflection, Z = section modulus, S = allowable stress, SL = longitudinal stress caused by pressure, W = weight (lb/in).

3. Hanger loads listed are the full weight of the longest span in each category.

If the compressive strength of the concrete is unknown, it can be assumed to be 2500 psi (17250 kPa) and the results of the manufacturer's test derated proportionally. Explosively actuated fasteners should not be used where a group of pins is needed to support a load.

Spring hangers should be used where expansion can cause vertical movement of a pipeline. For example, if a branch line is connected to a vertical heating-cooling riser on the 12th floor of a high-rise building, the connection point could be 1 in (25 mm) above its ambient elevation during the heating season and 1 in (25 mm) below in the summer. Using spring hangers on the branch near the riser connection will provide support under both conditions.

Hanger spacing is often determined by the building steel available for suspending the pipe. Tables C4.12, C4.13, C4.14, and C4.15 show maximum spans for steel, copper, aluminum, and plastic pipe. These tables are calculated using a simple beam formula to determine stress and deflection. The basic allowable stress of the pipe will not be exceeded at double the span shown in the tables. The usable stress for bending is that which remains after the stresses due to longitudinal pressure have been deducted from the basic allowable stress of the material. The tables also have

TABLE C4.14 Pipe Spans for Standard Weight Aluminum Pipe for Straight Runs with No Valves or Components

	Pipe and insulation			Pipe, water, and insulation		
	ASTM B241 A93003-0 S = 3,400 to 200°F			ASTM B241 A93003-0 S = 3,400 to 200°F		
	Pressure in pipe			Pressure in pipe		
Nominal pipe size NPS (DN)	180 psig (ft)	15 psig (ft)	Hanger load (lb)	180 psig (ft)	15 psig (ft)	Hanger load (lb)
½ (15)	6	6	2	6	6	3
¾ (20)	7	7	4	7	7	5
1 (25)	8	8	6	8	8	9
1¼ (32)	10	10	10	8	9	14
1½ (40)	12	12	13	9	10	19
2 (50)	13	14	19	9	10	31
2½ (65)	14	15	33	10	12	51
3 (80)	16	17	47	11	12	77
4 (100)	18	20	74	12	14	132
5 (125)	19	22	108	12	14	207
6 (150)	21	24	149	13	15	304
8 (200)	22	27	252	13	17	550
10 (250)	25	31	383	14	18	901
12 (300)	26	33	534	14	19	1329

1. Spans based on (1) lesser of half that permitted by allowable stress in simple beam formula or (2) deflection of 0.1 × NPS to 0.2 in max.

2. Formulas used: simple beam span (ft) = $[\{8Z(S - SL)/W\}^{0.5}]/12$; deflection span (ft) = $[(384\,EIG/W)^{0.25}]/12$, where E = modulus of elasticity, I = moment of inertia, G = permitted deflection, Z = section modulus, S = allowable stress, SL = longitudinal stress caused by pressure, W = weight (lb/in).

3. Hanger loads listed are the full weight of the longest span in each category.

the deflection limited to the smaller of 0.2 in or 10 percent of the nominal pipe diameter at the listed span.

The tables show the effect of internal pressure on pipe spans. In general the deflection is the governing factor in the smaller sizes. The weights and spans have been calculated based on mineral-fiber insulation.

EXPANSION AND FLEXIBILITY

Expansion in building-service piping must be recognized and allowed for. The temperature extremes may run from 40°F (4°C) for chilled water, which will result in the contraction of a pipe installed at 70°F (21°C), to 360°F (182°C) for 150 psig (1035 kPa) steam; which will give rise to a much greater expansion of a pipe. Part B of this handbook gives a detailed discussion on expansion and flexibility as well as tables giving coefficients of expansion and the actual expansion for various materials between given temperatures.

Uncontrolled expansion forces can be harmful at equipment connections by imposing loads on the equipment. Manufacturers will provide the allowable forces

TABLE C4.15 Pipe Spans for Sch 40 CPVC, PVC, ABS, and Sch 80 PP Thermoplastic Pipe, Including Water and Insulation

	CPVC ASTM F441 #4120 Cell no. 23447						PVC ASTM D1785 #1120 Cell no. 12454				ABS ASTM D1517 Des. no. 1210				Polypropylene Schedule 80 pipe					
	Pipe pressure (psig)						Pipe pressure (psig)				Pipe pressure (psig)				Pipe pressure (psig)					
	73°F		100°F		180°F		73°F		100°F		73°F		100°F		73°F		100°F		180°F	
Nominal pipe size NPS (DN)	100 (ft)	15 (ft)	100 (ft)	15 (ft)	100 (ft)	15 (ft)	100 (ft)	15 (ft)	100 (ft)	15 (ft)	100 (ft)	15 (ft)	100 (ft)	15 (ft)	100 (ft)	15 (ft)	100 (ft)	15 (ft)	100 (ft)	15 (ft)
½ (15)	3	3	3	3	3	3	3	3	3	3	3	3	3	3	3	3	3	3	2	3
¾ (20)	4	4	3	3	2	3	4	4	4	4	3	3	3	3	3	3	3	3	EX	3
1 (25)	4	4	4	4	3	3	4	4	4	4	4	4	4	4	4	4	4	4		3
1¼ (32)	5	5	5	5	EX	4	5	5	3	5	5	5	4	5	5	5	5	5		3
1½ (40)	6	6	6	6		4	6	6	6	6	5	6	4	5	6	6	5	6		3
2 (50)	7	7	7	7		4	7	7	7	7	5	6	4	5	6	7	5	6		4
2½ (65)	8	8	8	8		5	8	8	8	8	6	7	5	6	7	7	6	7		4
3 (80)	9	9	8	9		5	9	9	8	9	6	8	5	7	8	8	6	7		4
4 (100)	10	10	8	10		5	10	10	9	10	6	8	EX	7	8	9	6	8		5
5 (125)	10	11	9	10		5	10	12	9	11	EX	8		7						
6 (150)	11	12	9	11		6	11	12	9	11		9		8	9	11	7	9		5
8 (200)	11	13	9	12		6	11	13	9	12		9		8	9	12	EX	10		6
10 (250)	12	14	10	13		7	12	14	10	13		10		9						
12 (300)	12	15	10	13		7	12	15	10	14		11		9						

1. Spans based on lesser of (1) half that permitted by allowable stress in simple beam formula or (2) deflection of 0.1 × NPS to 0.2 in max. For empty pipe and glass fiber insulation.

2. Formulas used: Deflection span (ft) = $[(384EIG/W)^{0.25}]/12$; simple beam span (ft) = $[\{8Z(S - SL)/W\}^{0.5}]/12$, where E = modulus of elasticity, I = moment of inertia, G = permitted deflection, Z = section modulus, S = allowable stress, SL = longitudinal stress caused by pressure, W = weight.

EX—At this pressure the hoop stress in the pipe exceeds the allowable stress for this size and larger.

and moments. When necessary these forces can be controlled by providing an anchor or restraint on the piping at or near the connection.

Long straight runs of pipe with no offsets, or very short offsets, need to be checked for total linear expansion. These are found most often as risers in vertical buildings and mains in horizontal buildings. If the amount of expansion encountered cannot be absorbed by the flexibility in the pipe configuration at take-offs from a main, or at the end of a main, an expansion joint or pipe loop must be used.

There are three categories of expansion joints: corrugated bellows, packed slip joints, and rotary or ball joints. All expansion joints must be placed between anchors to direct the forces and in some cases to keep the joint from separating due to the internal pressure.

1. Corrugated joints have no packing, which is an advantage since they do not develop leaks. The pipe leading to this type of joint must be provided with adequate guiding to keep the pipe axially aligned and direct the expansion forces into the joint. If the pipe is improperly guided the joint may squirm, which results in misalignment and possible catastrophic failure.
2. Packed slip joints have the disadvantage of packing, which must be maintained. They must also be guided, but catastrophic failure is unlikely unless an anchor fails.
3. Ball joints are used in pairs in branch pipes, or in the main after an elbow, to take up the expansion offset. These are packed swivel joints which need maintenance but will not separate.

Flexibility is inherent in a building system due to the elbows and offsets usually necessary to get from the source to the destination. An unrestrained piping system will find its own point of least stress and have the lowest end forces. If an inspection of the pipe route does not reveal any places where the expected expansion will interfere with walls, columns, ducts, or other pipes, it is advisable not to introduce anchors. Detailed flexibility analysis methods can be found in Part B of this handbook.

TESTING

Before putting a system in service it should be tested for leakage or proof tested to demonstrate its ability to withstand the design pressure. This can be done by several methods.

Hydrostatic Testing

Hydrostatic testing is the preferred method of testing, since leaks are detectable and the stored energy in the pipe is low. All joints should be exposed and uninsulated. Before initial filling, the following precautions should be observed:

1. A survey of the entire pipeline should be made to ensure that there are no open ends; all hangers, anchors, and guides are in place; and all joints are properly made.
2. All equipment that will be damaged by the test pressure should be isolated from the system.

3. Expansion joints and anchors in the pipeline should be checked for their ability to withstand the test pressure.
4. If the test pressure is to be left on the system for an extended period, a relief valve should be installed to prevent overpressurization due to expansion of the fluid caused by an increase in temperature.
5. Vents should be used to release air from high points of the system. Drains should be provided to remove the test liquid.

Test Medium. The test medium should be water unless there is a risk of freezing or water will damage the system. A glycol solution can be used if provisions are made to flush the system and properly dispose of the glycol at the end of the test. The system should be filled gradually and examined to detect leaks as the filling progresses.

Test Pressure. The test pressure required by B31.9 is 1.5 times the design pressure at all points of the system. For vertical systems the pressure at the bottom should not exceed the lower of

1. 90 percent of the minimum yield strength of the material
2. 1.7 times the SE value of brittle materials
3. The rated pressure of valves or equipment which will be subjected to the pressure

Examination. Examination of the entire system for leaks should be made after the test pressure has been on the system for at least 10 minute. If leaks are found they should be repaired and the test repeated until no leakage is detected.

Pneumatic Testing

Pneumatic testing is dangerous and should only be used within the following conditions:

1. There are no soldered joints in the system over NPS 4 (DN 100).
2. If brittle plastic, no pipe is larger than NPS 2 (DN 50).
3. Water will be detrimental to the system.
4. The test pressure does not exceed 150 psig (1035 kPa).

The test medium should be air, nitrogen, or any other innocuous gas.

Test Pressure. The test pressure for a pneumatic test is limited by B31.9 to a maximum of 1.25 times the design pressure. The pressure should be introduced gradually with the first increment not more than 10 psig (69 kPa), at which time an inspection can be made for major leaks. The pressure can then be raised in increments of 25 percent, pausing at each increment to allow system equalization.

Examination. Examination for leaks should be made after the full test pressure has been on the system for 10 minute or more. Leaks can be detected by soap bubbles, special testing fluids, ultrasonic means, or test-gauge monitoring.

Service Testing

Service testing can be used in place of the above tests for low-pressure systems that operate below 15-psig (103 kPa) steam pressure or 30-psig (207 kPa) water pressure. Proof testing is not needed, and an examination for leaks can be made when the system is placed in initial operation for the service intended.

PROBLEMS AND SOLUTIONS

Some of the problems occurring most often with piping systems are discussed below.

The cost of the installation is too high. If this comment is heard, check the following:

1. Has seamless pipe been used when furnace butt-weld or electric resistance-weld pipe will be adequate?
2. Has Type *K* copper tubing been called for when Type *L* is adequate?
3. Have steel valves been used when ductile-iron or cast-iron valves are strong enough?
4. Has radiography of welds been called for when it is not required by the piping code?
5. Are too many anchors and expansion joints called for when the system has inherent flexibility?
6. Have factory-made tees or reinforced outlet fittings been used when welded branch connections are suitable?
7. Has the use of grooved-type joints been permitted where they are economical?
8. Has the use of plastic materials been considered?
9. Are pipe sizes too large? This requires analysis of the long-term pumping costs, since smaller pipe sizes will result in greater friction.
10. Has the hanger spacing been checked to make sure the most economical spacing has been allowed?
11. Has the system configuration been reviewed to be sure the most direct route possible has been selected?

The system does not circulate the proper GPM. Look for the following:

1. Are all of the valves open?
2. Is the system fully vented?
3. Are all the strainers clean?
4. Is the pump providing the proper pressure differential?
5. Is there an obstruction in the piping? Check pressures along the system to find an unpredicted drop.

The system is noisy. Look for the following causes:

1. Has the system been fully vented? Air in the system is noisy.
2. Is the pump circulating too much fluid? If the required system head has been

predicted higher than the actual one, the pump is circulating too much fluid and causing velocity noise. Throttle a pump-balancing valve to introduce more pressure drop in the system. If this solves the problem, the pump impeller should be changed for long-term economy.

The chilled water expansion tank overflows. Investigate the following:

1. The makeup level in the tank is set too high and water is added when the system is operating cold.
2. The tank does not have the capacity for the expansion volume.
3. There is a cross connection to another system.

The steam pipes make knocking noises. Investigate the following:

1. The steam pipe has not been pitched in the direction of condensate flow.
2. The distance between drip legs on long runs is too great. If the knocking only occurs on warmup, look for a slower warmup method.

The water pipes hammer or shake. Water hammer can be caused by the following:

1. The sudden opening or closing of a valve. Automatic valves can be made to operate slower to prevent water hammer. Manual valves should always be operated slowly.
2. The starting or stopping of a pump. A spring-loaded or hydraulically operated check valve should always be installed at the discharge of large pumps.
3. Air can be sucked into a piping system at a cooling-tower basin and cause violent pipe movement. Install a vortex breaker in the basin.

Is the system ready to be placed in operation?

1. The pressure test should be performed and all blanks removed.
2. The system should be flushed, and the water treatment system should be operable.
3. A visual inspection should be made to be sure all open ends have been secured, all block valves are in the proper position for operation, all safety and relief valves are installed, and if a water system, the system is full and vented.
4. A visual inspection should be made to be sure adequate pipe expansion room is available. Some approximations that can be used for visual inspection are as follows per 100 ft (30.5 m) of straight pipe per 100°F (38°C) from ambient temperature (do not use for exact calculations):

Ductile iron	Expands	1 in
Steel	Expands	1 in
Stainless steel	Do	1¼ in
Copper or brass	Do	1½ in
Aluminum	Do	2 in
RTRP	Do	2 in
PVC & CPVC	Do	5 in
Polypropylene	Do	6 in
ABS	Do	7 in
PB	Do	9½ in

5. Check that all anchors and guides are in place.

Life Expectancy. Piping in power plants, refineries, industrial plants, and so on, where the piping is a part of the process, is subjected to extreme service conditions and is therefore closely monitored. Building piping, while necessary to the operation of a building, is not subject to severe service and therefore not watched as closely. Because the pipe is built into walls and shafts, it is expensive to replace and is generally designed to last as long as the building.

The corrosion of steel pipe is the biggest concern. Closed recirculating systems such as chilled water or heating water can circulate for years with very little corrosion, since no new oxygen is introduced into the system. Cooling tower piping systems require very close monitoring, and alternative materials should be considered.

BIBLIOGRAPHY

ASHRAE Handbook, American Society of Heating, Refrigerating and Air Conditioning Engineers, Atlanta, GA.

ASME Boiler & Pressure Vessel Code, ASME, New York.
  Section I, Power Boilers
  Section IV, Heating Boilers
  Section VI, Recommended Rules for Care and Operation of Heating Boilers
  Section IX, Welding and Brazing Qualifications

ASME Code for Pressure Piping B31, ASME, New York.
  B31.1, Power Piping
  B31.3, Chemical Plant and Petroleum Refinery Piping
  B31.5, Refrigeration Piping
  B31.9, Building Services Piping

ASTM Annual Book of ASTM Standards, ASTM, Philadelphia, PA.
  Volume 01.01, Steel-Piping, Tubing, Fittings
  Volume 02.01, Copper and Copper Alloys
  Volume 08.04, Plastic Pipe and Building Products

Piping Engineering, Tube Turns Division of Chemetron Corporation, Louisville, KY.

Copper Tube Handbook, Copper Development Association Inc., Greenwich, CT.

Victaulic Mechanical Piping Systems General Catalog, Victaulic Company of America, Easton, PA.

MSS Standard Practices, Manufacturers Standardization Society, Inc., Vienna, VA.
  SP-58, Pipe Hangers and Supports—Materials, Design and Manufacture
  SP-69, Pipe Hangers and Supports—Selection and Application

PFI Technical Bulletin, Pipe Fabrication Institute, Springdale, PA. TB2, Reinforcement Tables for Branch Connections

CHAPTER C5

OIL PIPELINE SYSTEMS

Charles L. Arnold
Principal Pipeline Consultant,
Albany, California

Lucy A. Gebhart
Pipeline Engineer,
Bechtel Corporation

INTRODUCTION

This chapter on oil pipeline systems has been prepared as a basic guide to the design of cross-country pipelines for liquid petroleum and related products. It focuses on the fundamentals of pipeline design, emphasizing practical guidelines for real systems. It provides a general overview of the system approach to design, which integrates the hydraulic, mechanical, and operations and maintenance aspects in the design of a system, along with project economic analysis, in determining the preferred pipeline system.

This chapter also includes discussion of design topics for related pipeline-system components such as pump station and location and sizing, material selection for pipe, metering, leak detection, and system control. Aspects of petroleum-system design related to the special characteristics of some petroleum commodities are also addressed, in particular topics related to high-vapor pressure systems, multiproduct systems, and systems requiring consideration of variable thermal properties of the fluid, i.e., hot oil systems. Finally, design considerations for seismic and underwater design of pipeline systems are outlined.

Scope

There are three basic codes developed by the American Society of Mechanical Engineers (ASME) which govern the design of piping systems in chemical, petroleum liquid, and gas usage.

Piping inside the boundaries of a chemical plant, refinery, or gas processing plant falls under the scope of ASME B31.3 and is covered separately in this handbook (see Chap. C7). Likewise, ASME B31.8, covering gas transmission and distribution piping systems, is specifically addressed in Chap. C6 of this handbook.

This chapter specifically addresses oil transportation systems as covered by the ASME B31.4 Code—*Pipeline Transportation Systems for Liquid Hydrocarbons and Other Liquids*.[1] In this chapter, references to specific sections of the ASME B31.4 Code will be cited as ''Sec.   of the Code,'' or in some cases ''the Code.''

Figures C5.1a and C5.1b are schematic diagrams illustrating the scope of ASME B31.4 for liquid petroleum piping systems other than carbon dioxide and carbon dioxide respectively.

Code Compliance

The ASME Codes set forth the practices required for design and operation of safe pipeline systems. Section 400.1.1 of the Code states its scope, in part, as follows:

> This code prescribes requirements for the design, materials, construction, assembly, inspection, and testing of piping transporting liquids such as crude oil, condensate, natural gasoline, natural gas liquids, liquified petroleum gas, carbon dioxide, liquid alcohol, liquid anhydrous ammonia, and liquid petroleum products between producers' lease facilities, tank farms, natural gas processing plants, refineries, stations, ammonia plants, terminals (marine, rail, and truck), and other delivery and receiving points.

While the Code gives guidelines for pipeline system design, it is not intended to provide complete specifications for all phases of design and operation. Furthermore, there may be additional federal (or country), state, and local regulations governing pipeline design, construction, and operation.

It is the intent of this chapter to supplement the Code with discussion of the principles governing the design of a petroleum transportation system, identifying the analytical and design tools and procedures an engineer might use. This chapter in itself may not address all the design problems which will arise in the real world, and there are some cases where even the best design guide or reference cannot replace experience and judgement. Specific engineering and operating companies may also have guidelines which they require an engineer to follow in the course of designing a pipeline transportation system.

The responsibility rests with the engineer or designer to identify the specific requirements and applicable codes for a given system with regard to design and operational conditions, as well as to follow specific guidelines mandated by the engineering or operating company and any relevant additions to the Code, and other regulations which may govern the design.

Codes, Standards, Specifications, and Recommended Practices

In general, pipelines which are designed in accordance with the Code will meet the requirements in the USA for liquid petroleum pipelines and associated facilities.

In addition to the ASME B31.4 Code, the following codes, specifications, standards, regulations, and recommended practices may be applicable to a proposed pipeline system or component thereof (this list is representative but is not comprehensive):

Design

U.S. Code of Federal Regulations, Title 49, Part 195—Transportation of Hazardous Liquids by Pipeline (known as 49 CFR 195)

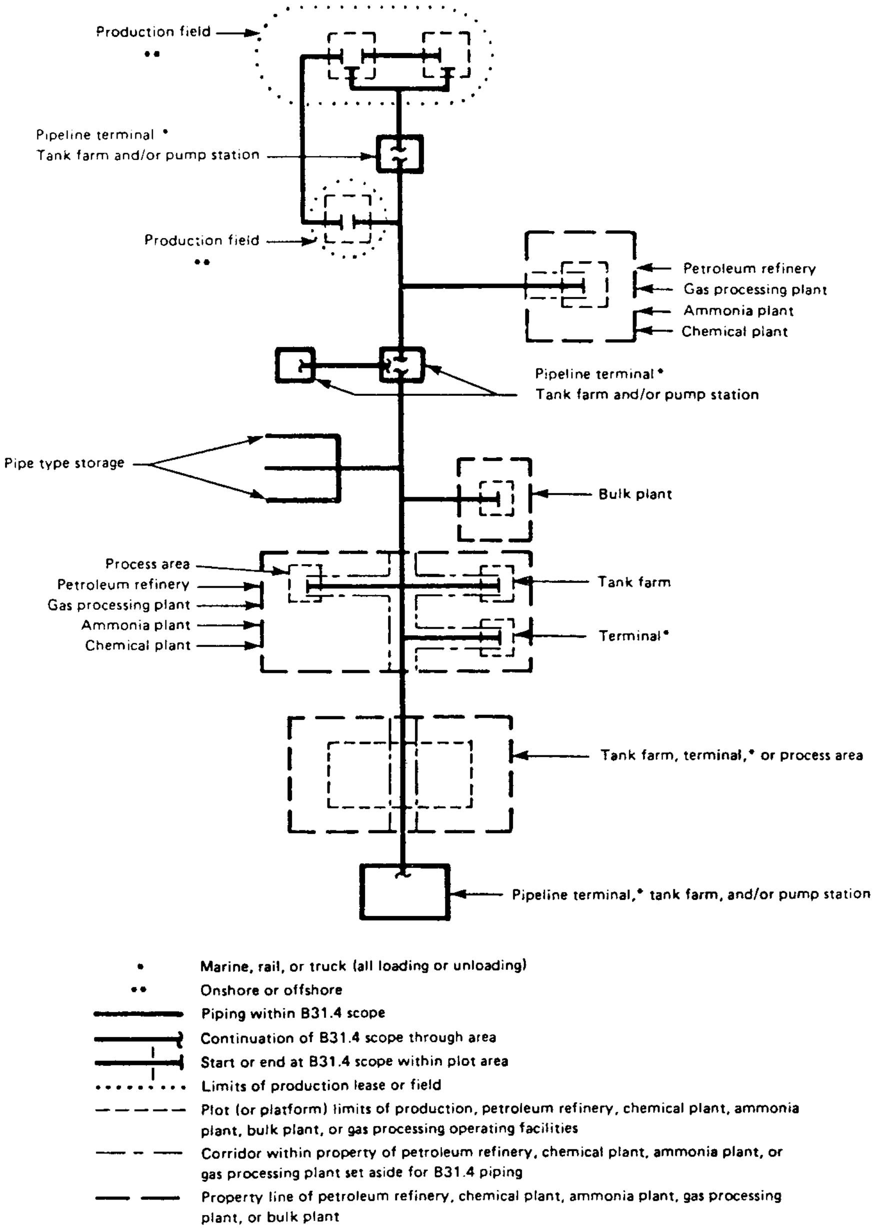
Production field
••
Pipeline terminal *
Tank farm and/or pump station
Production field
••
Petroleum refinery
Gas processing plant
Ammonia plant
Chemical plant
Pipeline terminal *
Tank farm and/or pump station
Pipe type storage
Bulk plant
Process area
Petroleum refinery
Gas processing plant
Ammonia plant
Chemical plant
Tank farm
Terminal*
Tank farm, terminal,* or process area
Pipeline terminal,* tank farm, and/or pump station
* Marine, rail, or truck (all loading or unloading)
•• Onshore or offshore
Piping within B31.4 scope
Continuation of B31.4 scope through area
Start or end at B31.4 scope within plot area
Limits of production lease or field
Plot (or platform) limits of production, petroleum refinery, chemical plant, ammonia plant, bulk plant, or gas processing operating facilities
Corridor within property of petroleum refinery, chemical plant, ammonia plant, or gas processing plant set aside for B31.4 piping
Property line of petroleum refinery, chemical plant, ammonia plant, gas processing plant, or bulk plant

FIGURE C5.1a Scope of ASME B31.4, excluding carbon dioxide pipeline systems.

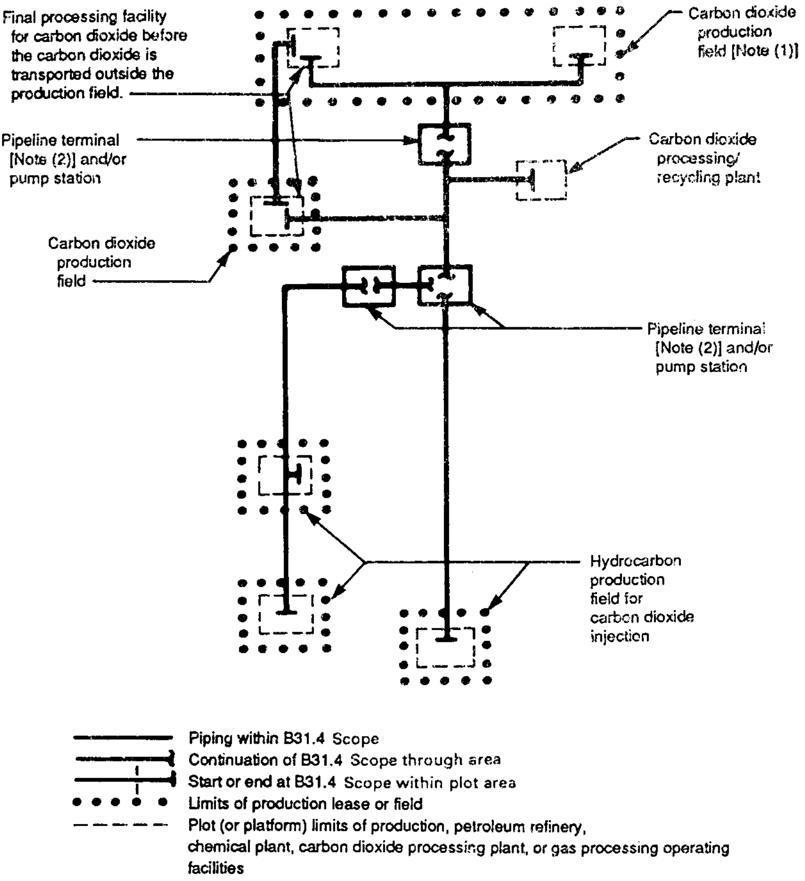
Final processing facility for carbon dioxide before the carbon dioxide is transported outside the production field.
Carbon dioxide production field [Note (1)]
Pipeline terminal [Note (2)] and/or pump station
Carbon dioxide processing/ recycling plant
Carbon dioxide production field
Pipeline terminal [Note (2)] and/or pump station
Hydrocarbon production field for carbon dioxide injection
Piping within B31.4 Scope
Continuation of B31.4 Scope through area
Start or end at B31.4 Scope within plot area
Limits of production lease or field
Plot (or platform) limits of production, petroleum refinery, chemical plant, carbon dioxide processing plant, or gas processing operating facilities

NOTES:

(1) Onshore or offshore.

(2) Marine, rail, or truck (all loading or unloading).

FIGURE C5.1b Scope of ASME B31.4 for carbon dioxide pipeline systems.

American Petroleum Institute (API) RP 1102—Recommended Practice for Liquid Petroleum Pipelines Crossing Railroads and Highways

American Petroleum Institute (API) RP 1111—Recommended Practice for Design, Construction, Operation and Maintenance of Offshore Hydrocarbon Pipelines

Australian Standard–1997: AS 2885.1 Pipelines—Gas and Liquid Petroleum—Part 1: Design and Construction

Australian Standard–AS 1978–1987: Pipelines—Gas and Liquid Petroleum—Field Pressure Testing

BS 8010: Part 1: 1989—Pipelines, Part 1. Pipelines on land: general Canadian Standard: CAN/CSA-Z662–96 Oil and Gas Pipeline Systems

API STD 1104, 1994: Welding of Pipelines and Related Facilities ASME Section IX—Welding and Brazing Qualifications

Material

API 5L—Specifications for Line Pipe[2]

API 6D—Pipeline Valves (Gate, Plug, Ball, and Check Valves)[3]

ASME B16.5—Pipe Flanges and Flanged Fittings[4]

ASME B16.34—Valves—flanged, Threaded, and Welding End[5]

ISO 3183−1, −2, and −3, 1996: Petroleum and natural gas industries—Steel pipe for pipelines—Technical delivery conditions

These codes, specifications, et cetera, also cross reference additional standards and recommended practices that apply to various aspects of petroleum pipeline system components.

Systems of Units. The metric units used herein are adopted from reference codes ASME B31.4a (1994); ASTM E380–93 Standard Practice for International System of Units (SI); ANSI/ASTM D1250 Manual of Petroleum Measurement Standards (MPMS)—Chap. 11.1, Volume Correction Factors[6]; ANSI/ASTM D1298 API Manual of Petroleum measurement Standards; API 5L Specifications for Line Pipe; and API 6D Pipeline Valves (Gate, Plug, Ball, and Check Valves). Each of these codes presents metric values, originally standardized in the English system, to the accuracy with which the conversions warrant. The reader should refer to these references for additional detail.

The engineer is concerned with physical dimensions and mechanical properties of materials comprising the pipeline system to an accuracy limited by repeatability and error of measurement. Similarly, the quantity of commodity transported is determined by the combined accuracy and repeatability of quantity measurement and determination on a weight basis at the time of delivery for commercial transaction, relative to standard temperature and pressure. The Manual of Petroleum Measurement Standards, Chap. 15—Guidelines for the use of the International System of Units (SI) in the Petroleum and Allied Industries (API Publication 2564),[7] establishes both SI units and acceptable exceptions.

Within these guidelines, SI units will be used herein with the exceptions °C for °K, and limiting expressions of pressure, head, and flow rate to the range 0.1 to 1,000 by powers of 10. Additionally, the period will be used for the radix as in customary English usage rather than the comma. The examples illustrating pipeline design methods are shown in metric units, and example calculations and tables include both customary English and metric units.

Conversion factors between English and metric systems are based on six significant figures to enhance repeatability. However, fewer significant figures are used for exact values, or when precision of the determinable value is limited. The Manual of Petroleum Measurement Standards expresses volume and density measurements to four significant figures. API 5L tabulates nominal metric pipe dimensions to 0.1 mm and pipe minimum yield and ultimate tensile strengths in MPa as integers to three significant figures. API Specification 6D, Pipeline Valves, designates pressure class as nominal pressure (PN) and nominal pipe diameter as (DN). For NPS 4 and larger sizes, multiply the NPS by 25 to obtain the corresponding DN.

This chapter of the *Piping Handbook* includes at the end of this chapter three tables of conversion factors useful in pipeline engineering practice but may not be inclusive of all used. The range of operating pressures, flow rates, fluid characteristics, size and strength of materials used in designing and fabricating pipeline systems introduces a requirement for numerical presentation in consistent scales that include the range of a particular application without introducing varying powers of 10. The examples in this chapter follow the practice of showing calculations in the same numerical form used in the illustrations.

References

General references and supplements for the material covered in this chapter are supplied at the end of the chapter. The majority of the material covered in this chapter is also available in numerous petroleum reference books and technical papers through trade publications. No attempt has been made to reference all sources of relevant data available. Only those most pertinent to the discussions are included here, or those considered most useful.

LIQUID-PETROLEUM PIPELINE SYSTEMS

It is interesting to note that liquid-petroleum pipeline systems have been in operation since the late 1800s; and, as illustrated in the title of the Code, a number of different commodities are transported via pipeline, with widely varying properties. Therefore, to begin the discussion of liquid-petroleum pipeline systems, it is useful to illustrate some of the characteristics of fluids covered by the B31.4 Code, based on examples of real pipeline systems. Then, as this chapter is intended to be an aid in the selection of the preferred pipeline design, the concept of the *system approach* to design is introduced, wherein the hydraulic, mechanical, and operations and maintenance aspects of design are integrated and evaluated with economic analysis to select the most economically attractive system.

Characteristics of Transported Commodities

ASME B31.4 covers a wide range of petroleum liquid commodities, including crude oils, residuals, and products of refining such as diesel oil, jet fuel, gasoline, natural gas liquids, oil-water emulsions, anhydrous ammonia, alcohols, carbon dioxide, and others. The physical properties of these commodities are also variable, and each pipeline system design is based on specific properties of an identified commodity, or group of commodities in the case of multiproduct pipeline systems.

Table C5.1 identifies general characteristics of some fluid commodities covered under the Code. The API gravity, viscosity, and temperature values shown (where available) are specific examples of operating pipeline systems and should only be considered as examples. The table also identifies specific considerations for different commodities which can have an effect on the design and operation of a pipeline sytem.

Table C5.1 includes reference to API gravity, which relates specific gravity of the petroleum commodity at 60°F to water at 60°F (60/60°F). While API gravity and specific gravity are related, API gravity characterizes boiling-point fraction range and, historically, has been indicative of the commercial value of the commodity and vapor pressure.

For pipeline hydraulics, the engineer is concerned with density, viscosity, vapor pressure, and pour point. Section 15.4.10 of the Manual of Petroleum Measurement Standards (MPMS) advises that API gravity and specific gravity are to be eliminated for use. API gravity is to be replaced with absolute density in kg/m^3, and specific gravity(sg) by relative density(rd) to water, both at standard conditions 15°C and 101.325 kilopascals. Vapor pressure is determined by ASTM D323-Reid Method, for volatile crudes and products except liquified petroleum gas (LPG). Vapor pressure for LPG is determined by ASTM D1267-LP Gas Method.

System Approach to Design

In the design of an oil transportation system, it is necessary to consider many aspects of design and operation as well as project economics in determining the preferred pipeline system to transport a commodity, or commodities, from a source to a destination. On a technical or engineering level, there are three aspects of design which are interrelated in the system approach to design:

- Hydraulic
- Mechanical
- Operations and Maintenance

Decisions in one area of design directly affect, or limit, the options in another area. For example, it may be necessary to locate a pump station such that it is accessible, for example, on a main road, near an electrical power source. Thus the pipeline route will have an intermediate location point set, in addition to the origin and terminal points. Likewise, preliminary design and cost estimating are not separate and independent procedures but are instead closely related and proceed concurrently.

The hydraulic design is the process of evaluating the physical characteristics of the commodity or commodities to be transported, the quantities to be transported, the pipeline route and topography, and the range of pressures, temperatures, and environmental conditions along the route. Identifying the number and location of pump stations with respect to the hydraulic characteristics of the system is also part of the hydraulic design. There may be several viable hydraulic designs for any given pipeline-design basis and route. The most feasible is identified in conjunction with the owner or operator of the system, giving consideration to early use requirements and future capacity plans for the system.

For any one hydraulic design there are a number of mechanical system designs that can be developed to meet the criteria of the design basis and deliver the commodity from origin to destination. The mechanical design is governed by the codes and standards developed from experience in operating petroleum pipelines systems, and focuses on selection of pipe material and the specification of physical line-pipe properties such as pipe diameter and wall thickness as required by the stresses imposed on the system by the hydraulic and thermal conditions, yet within the limits set by the Code. Other aspects of the mechanical design include the type, size, and power required of pumps and other equipment or ancillary facilities required to meet the hydraulic-thermal design, such as heating stations, and the support or burial requirements for the pipeline.

The final aspect of design takes into consideration the day-to-day tasks of operating and maintaining the functional integrity of the system. These include the

TABLE C5.1 Petroleum Commodity Characteristics for Pipelines

Commodity	Temp range F/(C)	Relative density	API gravity	Viscosities		Pour point F/(C)	Vapor press psi (kPa)	Remarks: flow regime, rheology, general conditions
				cSt at F/(C)	cSt at F/(C)			
Residuals:	150 to 250 (65 to 121)	1.02	7.2	50,000 at 130 (54)	330 at 250 (121)	130 (54)	—	Common design temperature in the range of 150 to 250°F (65–105°C). [One design for 800°F (427°C) is operating.] Thermal design required. Laminar flow.
	150 to 250 (65 to 121)	0.96	15.9	1,000 at 100 (38)	45.7 at 210 (99)	90 (32)	—	
Crudes:								
General	40 to 160 (4 to 70)	0.84	12–40	11 at 68 (11 at 20)	4.1 at 122 (4.1 at 50)	55 (13)	15 (103)	Generally newtonian in range of operating temperature. May require thermal design considerations. Transition to fully turbulent flow.
High wax content	70 to 140 (20 to 60)	0.81	35–45	7.4 at 122 (7.4 at 50)	3.3 at 140 (3.3 at 60)	95 (35)	15 (103)	Generally newtonian above cloud point; develops yield stress and nonnewtonian flow characteristics after static cooling. Transition to fully turbulent flow.
Shale oil	40 to 120 (4 to 50)	Data still emerging in shale oil systems—state of the art						Fluid properties vary with method of extraction and preparation for transport. Require considerations for vapor pressure, interfacial mixing and fluid properties when setting operations requirements.
Products:								
No. 2 furnace	30 to 80 (−1 to 27)	0.82–0.84	39	5.7 at 30 (5.7 at −1)	2.6 at 100 (2.6 at 38)	—		Newtonian fluids. Fully turbulent flow. May require thermal design.
Diesel–No. 1	30 to 80 (−1 to 27)	0.83		2.8 at 30 (2.8 at −1)	1.4 at 100 (1.4 at 38)	—		Multiproduct hydraulic design is based on the combination of fluid properties in the system that produces the maximum system stress and required pumping power at stations.

TABLE C5.1 Petroleum Commodity Characteristics for Pipelines *(Continued)*

Commodity	Temp range F/(C)	Relative density	API gravity	Viscosities cSt at F/(C)	Viscosities cSt at F/(C)	Pour point F/(C)	Vapor press psi (kPa)	Remarks: flow regime, rheology, general conditions
Diesel–No. 3	30 to 80 (−1 to 27)	0.88		10 at 30 (10 at −1)	3.6 at 100 (3.6 at 38)			
Jet fuel	30 to 80 (−1 to 27)	0.78		2.2 at 30 (2.2 at −1)	1.3 at 100 (1.3 at 38)			
Gasoline	30 to 80 (−1 to 27)	0.71–0.73	65	0.8 at 30 (0.8 at −1)			30@100 (207@38)	Require considerations for vapor pressure, interfacial mixing, and fluid properties when setting operations requirements, selecting pumps.
Natural gas liquids (NGL) and other high–vapor pressure petroleum liquids	30 to 130 (−1 to 55)	0.5		0.23 at 30 (0.23 at −1)	0.2 at 100 (0.2 at 38)	—	200 at 60 (1380 at 15) to 700 at 120 (4830 at 50)	Pressure is maintained above the critical pressure to avoid two-phase flow. Special considerations for loading pumps and blowing down pipeline sections are required. Fully turbulent flow.
Other:								
Oil-water emulsions	There is no specific example pipeline system for this commodity, or the information is proprietary or confidential.							May be either an oil or water suspension; fluid properties are extremely variable.
Alcohols	There is no specific example pipeline system for this commodity, or the information is proprietary or confidential.							Toxic; flame may be invisible in daylight.
Anhydrous ammonia	There is no specific example pipeline system for this commodity, or the information is proprietary or confidential.							Toxic and corrosive—Code requires >0.2 percent water by weight to inhibit stress corrosion cracking.
Carbon dioxide	There is no specific example pipeline system for this commodity, or the information is proprietary or confidential.							(See high–vapor pressure liquids.) Dehydration is required for pipeline quality. Heavier than air, toxic in elevated concentrations.

necessary control systems to operate the system within its design parameters and to promote safe and continuous operation.

The preferred pipeline system for a given set of conditions is selected through an economic comparison of several systems, seeking to identify the system that yields the best economic return on the investment dollar, depending on the initial and subsequent capital costs, the method of financing, and the operating and maintenance costs for the economic life of the investment. If alternatives require capital investments, e.g., for pumping stations, at different future dates, then these costs should be compared on a present-value basis, discounted at a real (after inflation) interest rate, to ensure a valid, unbiased selection of the preferred system. The details of economic analysis are addressed in financial analysis references.[22]

Programs are available for hand-held calculators, personal computers and mainframe computers for separately performing the hydraulic, thermal, mechanical, and economic analyses and design of petroleum pipeline systems.[28,29]

Concurrent with the hydraulic, mechanical, and operations and maintenance designs, the pipeline project team will also be performing many tasks related to the construction of the pipeline. These include technical and environmental surveys of the pipeline route and surrounding areas, preparation of environmental impact reports, acquisition of permits and rights-of-way, procurement of construction materials, development of construction costs considering pipe diameter, wall thickness, grade of steel and welding procedures, and preparation of contract specifications and bidding papers. These and other topics related to construction of pipelines are covered in other handbooks.

The investigation of any pipeline system begins by establishing the design basis for the commodity, then making a preliminary selection of pipe diameters and cost estimates for comparative economic attractiveness. If the preliminary estimates indicate further consideration is desirable, then preliminary feasibility considerations begin by selecting possible routes and developing a preliminary design.

The preliminary cost estimates developed in Tables C5.7, C5.7M, C5.8, and C5.8M, are examples of initial order-of-magnitude cost estimates for selecting alternative pipe diameters and overall cost feasibility. The pipe diameters used in Table C5.8M are the basis for the discussion of the hydraulic designs illustrated in the section that follows. The pipe diameters used have been selected to illustrate considerations in the hydraulic analysis and effect on mechanical design and cost rather than to select a preferred design for the example system discussed.

HYDRAULIC DESIGN

The hydraulic design integrates the physical characteristics of the transported commodity along a given pipeline route, within specified operating conditions as established in the design basis. The result of the hydraulic design is identification of the total system energy required to meet the design criteria. In addition, the hydraulic calculations indicate a range of feasible pipe diameters and preliminary spacing of pump stations along the route.

When the design is finalized, i.e., the route selected, pipe-line size determined, and type of pipe selected, the hydraulic calculations are refined to determine the conditions for over-pressure control during line shutoff and surges during operation. Hyraulic calculations can also be made for the variables in the operating conditions (temperature, ranges of viscosities for products pipelines, et cetera) and for future expansion of system capacity.

Route Selection

Given the task of transporting a liquid commodity from one point to another—whether it is from the point of production or storage to a processing plant, or from the process plant to distribution facilities—the first selection of route will logically be the shortest course, or a straight line.

While a straight-line route is a reasonable first approximation of the pipeline route, there are several common-sense reasons for deviation, including:

- Significant natural obstacles such as mountain ranges, rivers, swamps, et cetera.
- Minimizing of control points in the hydraulic profile (discussed later).
- Access for construction equipment and materials.
- Permitting restrictions.

A preliminary route is determined using suitable maps of the area which need to show geographic features such as contour lines as well as towns, roads, rivers, railroads, existing pipelines and utility corridors, et cetera. World Aeronautical Charts are available for most parts of the world, on different scales, for this purpose. U.S. Geological Survey maps are particularly useful for pipeline routing in the United States. Aerial photographs are also useful.

Several of the factors which will influence the selection of the design route may not be readily identifiable or resolved until later phases of design, in particular, environmental and permitting requirements and land acquisition. However, a preliminary route can be selected and later modified when more information on the specific and final route is available. Once an initial route is identified, the ground profile is plotted for use in the hydraulic design.

Example C.5.1. Figure C5.2 is a potential pipeline-route profile for a crude-oil pipeline design illustrated in this chapter. This example is a simplified profile. Real

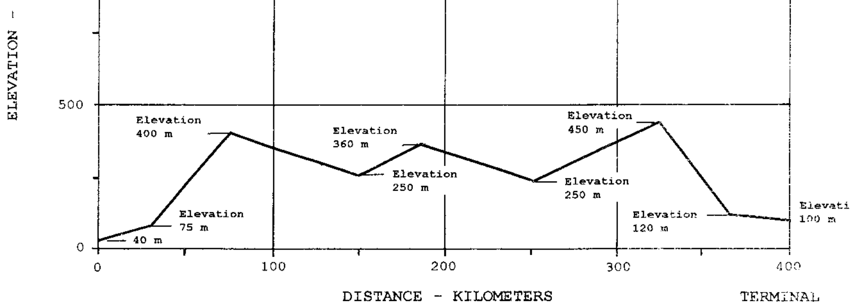

FIGURE C5.2 Example pipeline route profile.

pipeline systems typically have much more detail, showing river crossings, mountain ranges, and other geographical points.

It should be emphasized that this is not a cross-section of a straight-line course from origin to terminal but represents the real route, avoiding major obstacles mentioned earlier. The selected route results in a length of 248 miles (400 kilometers). Elevations of significant points along the route are shown.

If more than one reasonable alternative route has been identified, they are also plotted, and designed and analyzed simultaneously. Following sufficient identification, the alternatives will be evaluated on the basis of construction, operation, and maintenance cost, and a comparative economic analysis spanning the effective project or system life is performed to identify the preferred alternative. This topic is covered in more detail later in this chapter.

Design Basis

When beginning the design of a pipeline system, it is necessary to define the basis of the design as completely as possible. The general parameters which are required for the design of the system include:

- System operating parameters, such as design *throughput* or flow rate; operating temperature of the system
- Environmental conditions, such as ambient ground and air temperature (average and extremes)
- Properties of the transported fluid(s), or commodity, such as viscosity, relative density, vapor pressure, and pour point temperature.

System Parameters. There are a number of system parameters which are typically defined by the operating company or owner of the system. It is helpful for the design flow rate for the system to be defined as closely as possible. Maximum, minimum, and forecast future daily or annual throughputs of the pipeline system are required for good design, resulting in selection of the economically preferred line size as early as possible. This limits the iterations of the design as well as the range of alternatives.

The design throughput of an oil pipeline may vary by year and is usually expressed as the average daily flow rate in barrels per day (BPD) or 1000 m^3 per calendar day (1,000 m^3/cd), or in million tonnes[a] per annum (MTA), which requires conversion to daily rates for computation. The actual flow rate that a system must be capable of attaining to compensate for lost capacity from shutdowns and reduced flow conditions is the flow rate per operating day BPOD, or (1,000 m^3/d), which is greater than the flow rate per calendar day. The ratio of flow rate per calendar day to operating day is the load factor.

$$\text{load factor} = \text{rate per calendar day/rate per operating day} \tag{C5.1}$$

A well-operated pipeline can be expected to have a load factor of 92 to 95 percent. For domestic pipelines, this may be used in the design procedure unless special circumstances dictate a lower factor. Pipelines to be located in remote areas, more complex systems with many pump stations, or pipelines operated with expected flow variations would be more reasonably designed to a lower load factor, 85 to

---

[a] A tonne is equal to 1,000 kg (2205 lbs).

90 percent, to account for greater system downtime, i.e., from interruptions in service as a result of operations and maintenance.

Environmental Parameters. The critical environmental parameter for the hydraulic design is the ambient temperature of the ground, for buried pipelines, or the air, for aboveground systems. Most locations will have seasonal variations, and long pipeline systems may have variations over the length of the system. It is important to identify the mean or average ambient temperature as well as the seasonal and local extremes.

Properties of the Commodity. Specification of the commodity to be transported includes identification of viscosity, density, vapor pressure, and pour-point temperature. Some of these properties will have to be determined from laboratory tests on specific commodity samples. However, design may proceed on the basis of a typical commodity and include flexibility for a specified range of variation.

Viscosity is the physical property of fluids which resists flow and, for liquids, varies inversely with temperature. Besides density, viscosity is a key characteristic of the fluid to be considered in the design of liquid pipelines, having a significant effect on determining line size, station spacing, and pumping-power requirements. A discussion of viscosity, including the definitions of kinematic and absolute viscosity, has been included in Chap. B8, Flow of Fluids. Several of the references may also be consulted for viscosity data on specific hydrocarbons and other fluids.[7,8,9,10,11,12]

Example C5.2. Figure C5.3 shows the approximate viscosity-temperature (for a limited range of temperatures) relationship for a crude oil sample, having a viscosity of 6.0 centistokes (cSt) at 129.2°F (54°C), and 23.7 cSt at 59°F (15°C). This will be used for the basis of the example.

The viscosity-temperature is not truly linear, unless plotted on a special ASTM graph paper designed for this purpose. Figure C5.3 is plotted for the range 32 to 140°F (0 to 60°C) to the coordinates of ASTM D-341, Chart VII: kinematic viscosity, middle range, degrees Celsius, for the temperature range of −40 to 302°F (−40 to 150°C).

Reference ASTM D-341[11] for further discussion.

For crude oils, the pour point of the oil, i.e., the temperature at which viscosity of a cooling oil abruptly increases, needs to be considered to determine if special measures are required to move the oil when ambient ground and air temperatures are below this temperature. An oil with a pour-point temperature above the ambient condition will require dilution with a lighter stock oil (sometimes referred to as cutter stock), addition of a pour-point depressant, or a heated pipeline system.

Isothermal Systems

Oil transportation pipelines typically will have some variation in temperature over the entire system. As this then affects viscosity and has other design impacts, the discussion of the hydraulic design will continue based on isothermal—constant temperature—systems, with the assumption that temperature variations are limited. Special considerations for nonisothermal systems are discussed later.

Example C5.3. Crude-oil pipeline system, isothermal flow, 248 ground miles (400 km) over a route with a maximum elevation of 1476 ft (450 m). Figure C5.2, included earlier, shows the route profile for this example. The initial elevation is 131 ft (40 m) at the origin, and a liquid head level of 492 ft(150 m) with respect to the datum is maintained at the terminal.

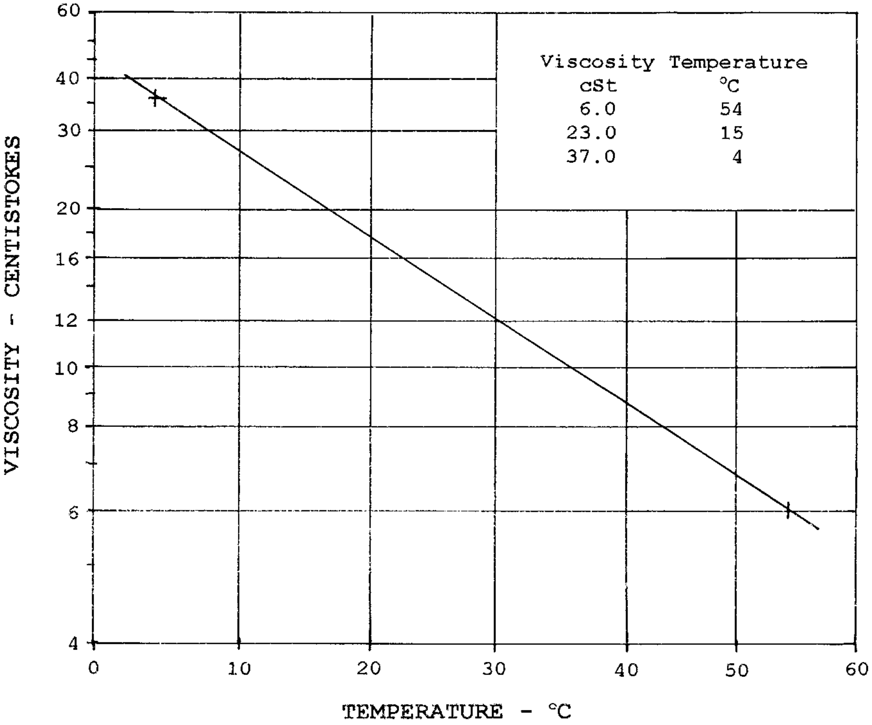

FIGURE C5.3 Example viscosity versus temperature, crude oil.

Design Basis:

API gravity at 60°F	32.6
Specific gravity (relative density) based on water @60°F (15°C)	0.8623
Ambient design temperature	39.2°F (4.0°C)
Viscosity @ 59°F (15°C)	23.0 cSt
Viscosity @ 129.2°F (54.0°C)	6.0 cSt
Flow rate (average)	169,800 BPCD (27,000 m^3/d)
Load factor	0.9

The design temperature for average operation differs from the measurement standard of the design crude. Consequently, it is necessary to make adjustments from the values given here at standard conditions @ 60°F (15°C) to the operating conditions.[7,8,10,11]

MPMS Chap. 11.1[7] Tables 5.3A and 5.4A tabulate correction factors for density and volume that adjust standard conditions to the design conditions for generalized crude oils, which will be used here. Additionally, Tables 5.3B and 5.4B tabulate correction factors for generalized products.

The correction factors are applied to the standard conditions to adjust density and volume to the design conditions. Density-and volume-correction factors are reciprocals of each other and can be applied by multiplication or division as required.

$$\text{Relative density } (rd) = \text{standard density kg/m}^3 / 1{,}000 \text{ kg/m}^3 \qquad \text{(C5.2)}$$

$$\text{Relative density @ } 4^\circ\text{C} = 862.3/1{,}000 \times 1.0091 = 0.8701$$

$$\text{Design flow rate} = 27{,}000/(0.9 \times 1.0091) = 29{,}790\text{m}^3/\text{d}$$

adjusted for both load factor and volume correction factor.

Use 188,700 BPOD (30,000 m^3/d) (rounded)

Viscosity @ 4°C = 37 cst, see Fig. C5.3

System Energy

Both head, H, and pressure, P, are used in discussing system energy. The conversions from head to pressure, and vice versa, are given by the following formulas, for standard conditions 60°F (15°C), with correction for specific gravity (*sg*) or relative density (*rd*) of the commodity, which adjusts the pressure or head to operating conditions.[7,8,10,11]

$$H, \text{ ft} = 2.31 \times P, \text{ psi}/sg \qquad \text{(C5.3)}$$

or

$$H, \text{ m} = 9.807 \times P, \text{ kPa}/rd$$

$$P, \text{ psi} = H, \text{ ft} \times 0.433 \times sg \qquad \text{(C5.4)}$$

or

$$P, \text{ kPa} = H, \text{ m} \times 0.102 \times rd$$

The total pressure drop in a pipeline system comprises three components:

1. Static pressure drop, due to changes in elevation
2. Acceleration pressure drop, due to changes in pipe geometry or phase
3. Friction pressure drop, due to flow rate, fluid properties, and pipe characteristics

When using the term *head* of fluid to denote system energy, the three components of head are typically referred to as static, or elevation head, H_s, velocity head, H_v, and friction head, H_f. These are the terms of the Bernoulli equation discussed in Chap. B8. Head loss expressed per unit of pipe length uses the lower case h, with the same subscripts.

The elevation head, H_s, is the difference between the inlet and outlet elevations between points on a system. The velocity-head component for long pipeline systems,

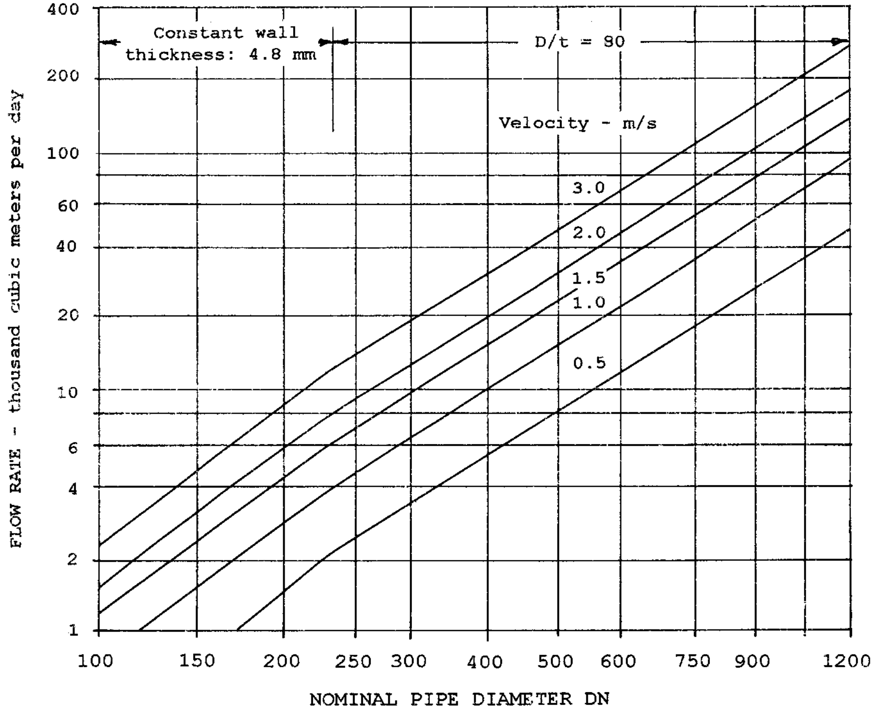

Note: DN (metric) = 25 x NPS (English)

FIGURE C5.4 Flow rate versus nominal pipe diameter for velocities of 0.5, 1.0, 2.5, 2.0, and 3.0 m/s.

and generally for systems with high head requirements, is a small percentage of the total head and is often assumed to be negligible in energy calculations.

Friction-head loss, on the other hand, is the dominant effect in most liquid pipeline systems and can be calculated using one of the following equations previously discussed in Chap. B8, Flow of Fluids:

- Darcy-Weisbach
- Fanning
- Hazen-Williams

The former two equations require a determination of friction factor as a function of the Reynolds number. The Hazen-Williams equation accounts for friction in a coefficient *C*, which is an empirically determined factor for the specific commodity.

Friction-loss tables based on the Darcy-Weisbach formula are available in many engineering reference books for water and viscous liquids.[9,13] Generally these tables, as illustrated in App. E, give friction loss in units of head loss, ft of head per 100 ft of pipe. Multiplying by 10 gives pipe friction loss in ft/1000 ft, or m/1000 m of pipe length. Each of these unit friction losses can be converted to pressure loss per unit of length using the appropriate conversion factor and density of fluid.

Hydraulic calculations are not complex for pipelines with a single commodity having little variation in viscosity. The first task is to specify the nominal pipeline diameter, or range of diameters, based on the design flow rate.

An approximation of line size can be made for the design flow rate using the tables available in handbooks, standard fluid-design manuals, or engineering reference books. The selection of line size is based on a preliminary economic analysis of alternatives discussed in Table C5.7 or C5.7M. Depending upon commodity, location, distance, and energy costs, velocities for preliminary estimates of line size are typically in the range of 2 to 10 ft/s (1 to 3 m/s). Figure C5.4 shows daily flow rate in 1000 m^3/d versus nominal pipe diameter, DN, in millimeters for velocities between 0.5 to 3 m/sec.

At this point a preliminary choice of one or more wall thicknesses is necessary, as eventually a cost of pipe will be found and because wall thickness will also be a component of the internal pressure and stress limitations. For a given diameter, D, also referred to as the nominal pipe size (NPS) or diameter (DN), a range of pipe Specified Minimum Yield Strength (SMYS) and wall thickness, t, is available.[1,2] Standard pipe wall thickness, depending on diameter, such as 0.250 in (6.4 mm) or 0.375 in (9.5 mm), may be used for the early design, and later adjusted if special commodity or system requirements are identified, such as high pressure or limitation on the allowable pipe stress in a section of the system.

The examples that follow use the internal design pressure, calculated by Code formula for the pipe grade and wall thicknesses, to determine the maximum allowable operating pressure (MAOP). After converting MAOP in units of pressure to units of head (MAOH) in feet or meters for the particular density of the fluid, the calculated slopes of hydraulic gradients between the MAOH at a pump station and the intersection with the ground profile determine pump-station locations for the given diameter and flow rate.

Example C5.4. Returning to the example, for the flow rate of 188,700 BPOD (30,000 m^3/d), assume that there are three diameters of pipe which are viable to illustrate the effect of pipe diameter on design. The following table can be constructed using a tabulation of the Darcy-Weisbach formula and a minimum wall thickness of 0.250 in (6.4 mm), for the three diameters:

TABLE C5.2 Example: Pipeline System Parameters

Parameter	NPS 16		NPS 20		NPS 24	
O.D. and wall thickness, in	16.0 × 0.250		20.0 × 0.250		24 × 0.250	
Flow rate, MBPD nominal	126.8	251.6	126.8	251.6	126.8	251.6
Roughness, in	0.0018	0.0018	0.0018	0.0018	0.0018	0.0018
Reynold's number	20,385	40,450	16,200	32,150	13,445	26,680
Darcy-Weisbach friction factor	0.026	0.022	0.027	0.023	0.029	0.024
Unit friction loss, ft/mi	65.37	220.42	21.88	73.34	9.01	30.05
Velocity, ft/s	6.64	13.29	3.97	7.95	2.73	5.47

TABLE C5.2M Example: Pipeline System Parameters

Parameter	DN 400		DN 500		DN 600	
O.D. and wall thickness, mm	406.4 × 6.4		508.0 × 6.4		610.0 × 6.4	
Flow rate, cubic meters per day	20,000	40,000	20,000	40,000	20,000	40,000
Roughness, mm	0.0457	0.0457	0.0457	0.0457	0.0457	0.0457
Reynold's number	20,240	40,480	16,085	32,170	13,335	26,670
Darcy-Weisbach friction factor	0.026	0.022	0.028	0.023	0.029	0.024
Unit friction loss, m/km	12.22	41.78	4.09	13.90	1.68	5.67
Velocity, m/s	1.90	3.80	1.20	2.40	0.825	1.65

Figure C5.5 is graphed using the data from Table C5.2M. The use of log/log scales results in an approximately linear relationship between flow rate and unit friction loss, h_f.

Two of the diameters also show the effect of adjusted viscosity to the operating condition of 39.2°F (4°C).

It is important to point out the adjustments made for the viscosity at operating temperature. If using a reference table based on water ($sg = 1.0$) to determine unit friction loss, or if the friction loss chart is based on viscosity at 60°F, corrections would need to be made for the design temperature and viscosity of the specific commodity at operating conditions.

Summing the friction losses for a specific set of pipeline diameters along the system results in the net friction head that must be overcome by the pump stations of the system. In addition, the positive or negative static head due to elevation difference between the inlet and outlet must be considered in determining the pumping requirements of the system. Minor losses at valves and fittings between stations are normally ignored, initially, or an allowance of an added length of pipe may be added to the scaled length to determine the estimated total system friction head loss.

Hydraulic Gradient

The hydraulic gradient is a profile representing the static head at any point in the pipeline system, relative to a common datum elevation, which is usually mean sea level. Ground elevation is represented by the route-elevation profile to the same datum. Energy added to the system through a pump station is plotted above the elevation profile. Head losses from friction, et cetera, are also shown graphically. For a pipeline system with constant parameters along the system, such as viscosity, relative density, and diameter, the hydraulic gradient will be a straight line with a slope equal to the friction loss per unit of length, h_f, for a specific flow rate. Therefore, the actual pressure in the pipeline at any point along the route is the difference between the hydraulic gradient and the ground elevation.

Figure C5.6 illustrates the slope of hydraulic gradients based on the 188,700 BPOD (30,000 m^3/d) flow rate and the three diameters tabulated in Table C5.2M, where an assumed pump-station discharge head of 3281 ft (1000 m) is shown at the origin. The hydraulic gradient, being the available head at any point along the pipeline route, cannot be less than the elevation of the pipeline-route profile. Therefore, where the gradient intersects the pipeline elevation, a pump station is required. It is obvious from Fig. C5.6 that unrealistically high station discharge

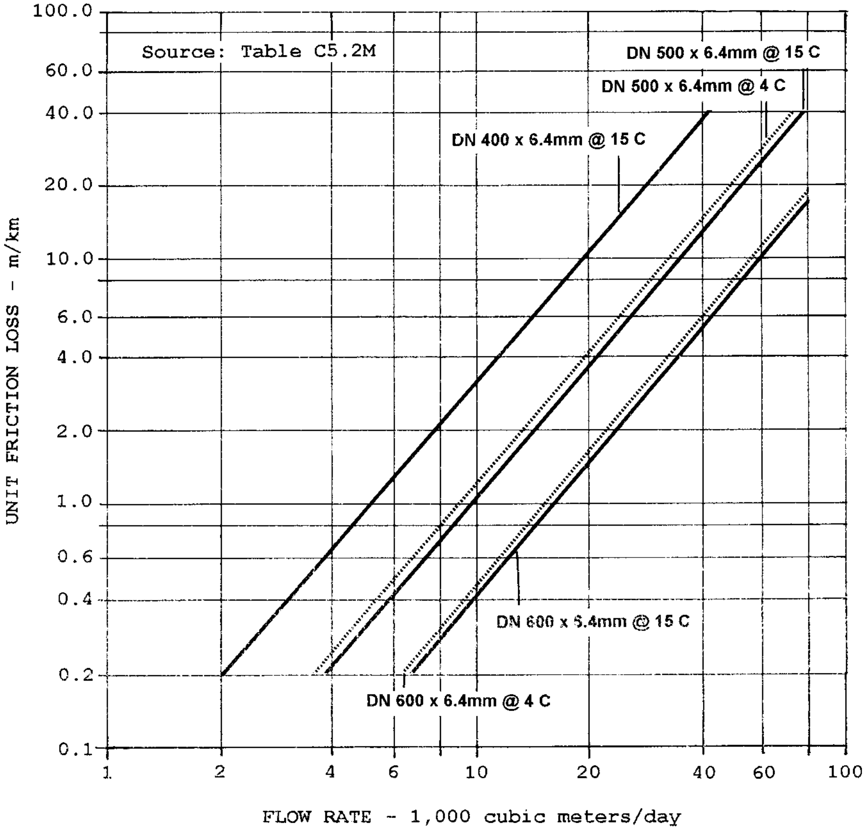

FIGURE C5.5 Unit friction loss versus flow rate.

heads would be required for only one pump station using NPS 16 (DN 400) or NPS 20 (DN 500) pipe. However, one station could be used on the NPS 24 (DN 600) pipeline by elevating the hydraulic gradient at the station discharge sufficiently to clear the ground profile at mile post 202 (kilometer post 325). The station discharge head is usually selected on the basis of the maximum allowable pressure rating for valves and fittings, or the MAOP of the selected pipe, whichever provides the required operating flexibility, and is the most attractive economically.

The example above for the NPS 24 (DN 600) pipeline illustrates an important use of the hydraulic gradient for identifying hydraulic control points on a pipeline route. A hydraulic control point is a high elevation point that will govern the inlet head for a section of pipeline as discussed above. In the example, the maximum profile elevation of 1476 ft (450 m) at milepost 199 (kilometer post 320) is a control point. It is logical that the hydraulic gradient must clear the ground elevation control point, but in doing so, two situations may result downstream as shown in Fig. C5.7 for the hydraulic gradient of the NPS 24 (DN 600) line.

1. Either the line is designed to flow full, requiring that back pressure control is provided at the terminal, or

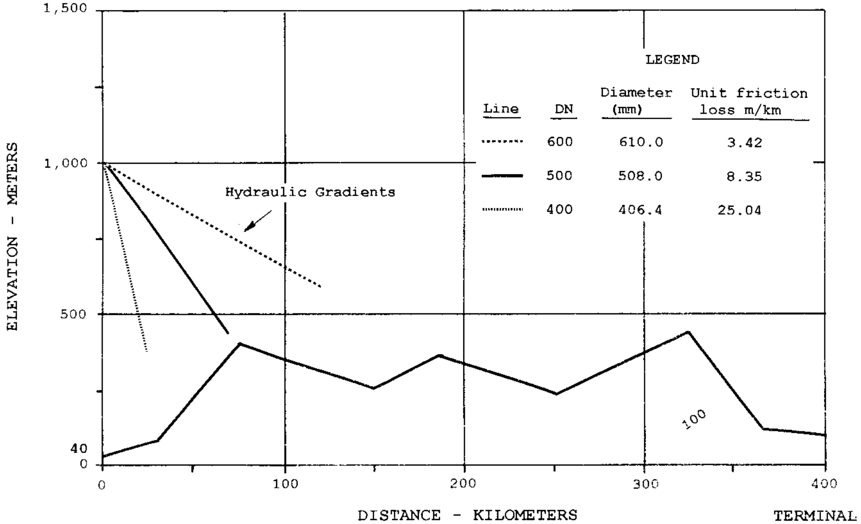

FIGURE C5.6 Example hydraulic gradient for 30,000 m^3/d for DN 400, DN 500, and DN 600 nominal pipe size.

2. Without back pressure control, the length of line downstream of the control point will flow partially full in a cascade or slack-line condition. Slack flow may not be a desirable condition in some pipeline systems; however, systems transporting crudes having low vapor pressures can, and do, operate successfully with slack flow.

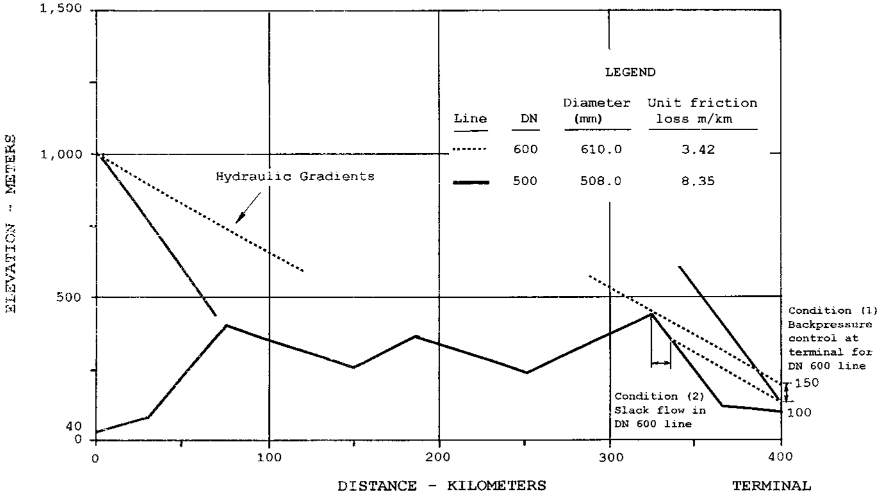

FIGURE C5.7 Example for clearance of a control point illustrating backpressure control and slack flow for 30,000 m^3/d.

In this example, the hydraulic gradient of the NPS 20 (DN 500) line clears the elevation of the control point, and the considerations for back-pressure control or slack flow only occur at lower flow rates.

Throughout this section, the example which will be discussed is a system with constant flow rate and one delivery point. In general, pipeline systems may have intermediate injection or delivery points along the route such that flow in the main line is increased or decreased. Hydraulic design of this type of system requires that the gradients for each section of the system with different flow rates be calculated and plotted in succession along the pipeline.

Maximum Allowable Operating Pressure

Section 404.1.2 of the Code expresses the required wall thickness for the internal design pressure for straight pipe by Eq. C5-5.

$$t = P_i \times D/(2 \times S) \qquad \text{(C5.5)}$$

where P_i = maximum allowable internal gauge pressure, psig (SI and metric units, see Eq. C5.6)
D = outside diameter, in (mm)
S_A = allowable stress, psig (MPa)—see sec. 4.2
t = wall thickness, in (mm)

Expressing Eq. C5-5 in the following form for calculating the internal design pressure,

$$P_i = B \times S_A \times t/D \qquad \text{(C5.6)}$$

The constant B is determined by the units of the allowable stress S_A, and the units of pressure to be determined using the ratio of *t/D* in consistent units.

Units	SI	bar	Metric	English
Allowable stress S_A	MPa	MPa	MPa	psi
Pressure	MPa	bar	kPa	psi
Constant B	2.0	20	2000	2.0

Wall thickness, *t*, for calculation of the MAOP excludes additional thickness for corrosion allowance, or imposed stresses such as concentrated loads at supports, thermal expansion or contraction, and bending. Determination of additional required wall thickness for these considerations is discussed later in this chapter.

At this point, the reader is referred to the tabulations for specified minimum yield strength and allowable stress which can also be found in API Specification 5L, Specification for Line Pipe,[2] which is based on the restrictions on allowable stress, according to the Code.

The following example uses the tabulated allowable stress values of API Specification 5L, and solves Eq. C5.6 for P_i based on an assumed diameter, wall thickness, and material.

Example C5.5. For the example pipeline system, assume the steel pipe is API grade 5L-X60, having a specified minimum yield strength of 60,000 psi (413 MPa).

TABLE C5.3 Maximum Allowable Operating Pressure

Pipe nominal size, NPS	16		20		24	
Pipe wall thickness, in	0.250	0.312	0.250	0.312	0.250	0.312
MAOP, psig	1,350	1,684	1,080	1,347	900	1,123
MAOH, ft[2]	3,580	4,468	2,864	3,574	2,387	2,978

TABLE C5.3M Maximum Allowable Operating Pressure

Pipe nominal diameter, DN	400		500		600	
Pipe wall thickness, mm	6.4	7.9	6.4	7.9	6.4	7.9
MAOP, kPa[1]	9,366	11,561	7,493	9,249	6,240	7,702
MAOH, m[2]	1,097	1,354	878	1,083	731	902

[1] API wall thickness in millimeters is approximately 0.6% greater than direct conversion of API wall thickness in inches, which yields a corresponding increase of MAOP when converted from wall thickness in English units. Maximum allowasble operating pressures are gauge.

[2] Allowable head is based on 0.8701 specific gravity (rd).

Tables C5.3 and C5.3M tabulate the MAOP and MAOH for grade X60 pipe for three diameters and two wall thicknesses.

(Calculations are based on Eq. C5.5, using actual pipe diameter, mm, and tabulated value of SMYS from API 5L. Allowable stress, S_A, calculated using Eq. C5-14, is 74.93 bar (7,493 kPa) with design factor of 0.72, and SMYS of 413 MPa per tables in API Spec 5L.)

The MAOP is used in the development of the system hydraulic design as a limit on the internal pressure component of the hydraulic gradient. When plotted above the route profile, the hydraulic gradient may not exceed this limit and still be designed to the B31.4 Code. MAOP is also used in determining the approximate number of pump stations.

Pump Stations

The calculated total system head required to achieve a given flow rate through a pipeline system with a selected diameter, which includes the total friction component and the static elevation difference between inlet and outlet, determines the pumping requirements of the system. As seen in Fig. C5.6, at least one intermediate pump station is required for the example system and pipe diameters illustrated. This section discusses a method of determining how many pump stations are required and locating them on the basis of hydraulic balance and a graphical method.

Number of Pump Stations. A rough number of pumping stations is found by dividing the total system pressure or head required to overcome elevation changes and friction, by the maximum allowable operating pressure or head, MAOP or MAOH, for a specific diameter, wall thickness and pipe material, using consistent units. For example:

$$\text{No. of pump stations} = \text{Total System Head}/(\text{MAOH} - \text{NPSH}) \qquad (C5.7)$$

Example C5.6. The first step to determining the number of pump stations is to determine the pressure or head required to overcome the frictional resistance caused by the flow of oil. Using a NPS 20-(DN 500) diameter pipe size with 0.250 in- (6.4 mm) wall thickness (this is usually written 20 × 0.250 in (508.0 × 6.4 mm) and a hand-held calculator programmed with the Darcy-Weisbach equation, the unit friction head loss, h_f, for the design flow of 188,700 BPOD (30,000 m^3/d) is 44.06 ft/mi (8.35 m/km).

Summing the friction head loss over the 248 miles (400 kilometers) measured length of the system yields 10,958 ft (3,340 m) of total head loss due to friction, H_f.

There is also a static head, H_s, of 361 ft (110 m) to be pumped against due to a change in elevation between the initial point and the head required at the terminal.

The total head, H, which is required from all pump stations on the system, is the sum of the static head and the friction head:

$$\begin{aligned} H,\ \text{ft} &= (H_f + H_s)\ \text{ft} & H,\ \text{m} &= (H_f + H_s)\ \text{m} \\ &= 10{,}958 + 361 & &= 3{,}340 + 110 \\ &= 11{,}319\ \text{ft} & &= 3{,}450\ \text{m} \end{aligned} \tag{C5.8}$$

The MAOP of API 5L Grade X60 pipe NPS 20 × 0.250 in wall (DN 500 × 6.4 mm), expressed in units of head is 2 864 ft (873 m). Assuming 82 ft (25 m) of head loss in station piping, the available head per station is

$$\begin{aligned} \text{Number of pump stations} &= 11{,}319\ \text{ft}/(2{,}864 - 82)\ \text{ft} = 4.07 \\ &= 3{,}450\ \text{m}/(878 - 25)\ \text{m} = 4.04 \end{aligned}$$

Fractional stations may be accounted for by using heavier wall pipe for a limited length, or by installing a booster station. These alternatives are evaluated on the basis of economics.

Location of Pump Stations. One pump station is located at the initial point of the pipeline. Downstream stations are initially located such that each of the pipeline sections will be in hydraulic balance, i.e., with each station having approximately the same differential head or pressure, thereby distributing the energy load equally.

$$\begin{matrix}\text{Pump Station} \\ \text{Differential Head}\end{matrix} = \begin{matrix}\text{Total} \\ \text{System Head}\end{matrix} / \begin{matrix}\text{Number of} \\ \text{Pump Stations}\end{matrix} \tag{C5.9}$$

In level terrain, this procedure for determining the number of pump stations would space stations equally along the route. However, in uneven terrain, such as in the example, the stations can be balanced using a graphical technique.

Figures C5.8 and C5.9 illustrate stations located graphically for the NPS 20 (DN 500) and NPS 24 (DN 600) pipelines by beginning at the elevation required at the terminal, then drawing the hydraulic gradient upstream to the intersection of the MAOH of the pipe, which is plotted above the ground-elevation profile. This location establishes the Actual Discharge Head (ADH) at the discharge valve of the pump station. The ADH is used here to avoid confusion with the term Total Discharge Head (TDH), which refers to pump performance relative to the centerline elevation of a pump.[13]

The elevation of the hydraulic gradient into the station is plotted above the ground elevation by the allowance to provide station losses to the pumps, and provide the required Net Positive Suction Head (NPSH) at the pumps. In this

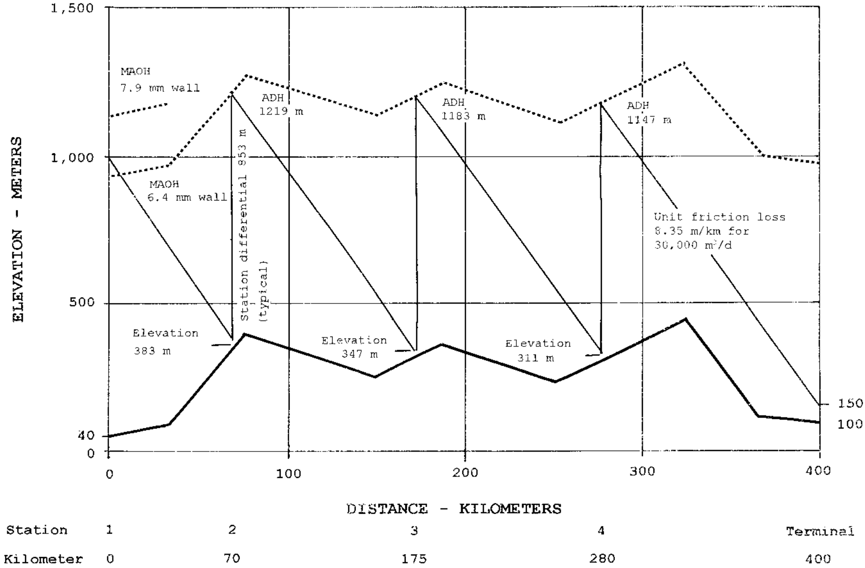

FIGURE C5.8 Hydraulic gradient for DN 500 pipeline example, 30,000 m^3/d.

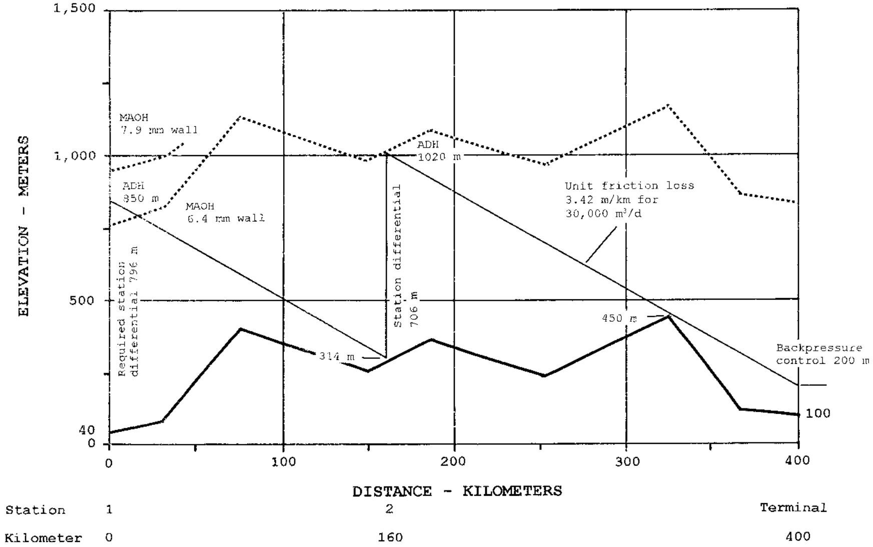

FIGURE C5.9 Hydraulic gradient for DN 600 pipeline example, 30,000 m^3/d with profile control point and backpressure control at terminal.

example the allowance is 25 meters. The difference between the ADH and the elevation of the incoming head is the difference between the head at the station discharge valve and the station suction valve, and is the station differential. In this example, the station differential is the MAOH of the pipe, minus the allowance for station suction losses and NPSH. The example below shows the calculation for the station differentials for the NPS 20 (DN 500) and NPS 24 (DN 600) systems.

Example C5.7: Station Differentials

Nominal pipe size	NPS 20 (DN 500)	NPS 24 (DN 600)
OD and wall, in (mm)	20 × 0.250(508.0 × 6.4)	24 × 0.250(610.0 × 6.4)
MAOH, ft(m)	2863(873)	2387(731)
Station loss, ft(m) and NPSH	82(25)	82(25)
Station differential, ft(m)	2781(848)	2305(706)

The actual differential head required of the pumps, however, is greater than the station differential by adding the total of all station losses including a discharge pressure-control valve if one is included in the station discharge piping.

Generally, an allowance of 50 to 100 feet (15 to 30 meters) of head at the intake of the pump station will account for the suction requirements of the pumps, station valves, and fittings losses. The estimate may be revised once specific pumps at a given station—station piping and control discharge head and the associated suction head requirements—are determined. Subsequent pump stations are located similarly with the use of a parallel-rule drafting tool to draw the gradients.

Alternatively, in more complicated terrain, pump-station locations may be determined beginning at the initial point and the MAOH, then progressing downstream using the same graphical procedure. Using this procedure, the station is located at the elevation required for the incoming hydraulic gradient above the ground profile.

While it is not required that the pump stations along a pipeline system be equal in energy, or discharge head, doing so results in a better operating environment. Other considerations may preclude a pure balance between the stations. For example, it may be necessary to fix or shift the location of intermediate pump stations due to unsuitable terrain, population and infrastructure criteria, or operations and maintenance considerations. Many designs, especially in rugged terrain or populated regions, may involve fixing certain key stations in accessible locations, i.e., near power lines, then locating other stations by the trial and error method.

The graphical technique described here allows leeway to make these adjustments. A considerable amount of adjustment can be made with little effect on the total hydraulic design, with respect to pipe diameter or total pump station power. However, moving stations to accommodate unequal station differentials may require using heavier wall pipe on the discharge of some stations. Figures C5.8 and C5.9 illustrate using 0.312-in (7.9 mm) wall pipe for the NPS 20 (DN 500) and NPS 24 (DN 600) systems at the discharge of station 1 to accommodate the hydraulic gradients that exceed the MAOH of 0.250-in (6.4 mm) wall pipe used farther downstream. In this case, the total requirement for heavier wall pipe to avoid a fractional station is installed at the initial station rather than distributed in shorter sections to the discharge of the remaining stations.

In the cases illustrated, using 0.312-in (7.9 mm) wall pipe increases the friction loss between station 1 and station 2, and the pumping head at station 1.

Example C5.8: Incremental Friction Loss

Nominal pipe size	NPS 20 (DN 500)	NPS 24 (DN 600)
Pipe diameter, in (mm)	20.0(508.0)	24.0(610.0)
Wall thickness, in (mm)	0.250(6.4)0.312(7.9)	0.250(6.4)0.312(7.9)
Friction loss, ft/mi	44.06 45.43	18.09 18.55
(m/km)	(8.35) (8.58)	(3.42) (3.50)
Incremental friction, ft/mi	45.43 − 44.06 = 1.37	18.55 − 18.09 = 0.46
due to increase of		
wall thickness, (m/km)	8.58 − 8.35 = 0.23	3.50 − 3.42 = 0.08
Length of pipe, mi (km)	19.3(31)	24.9(40)
Total incremental friction loss, ft(m)	26.4(7.1)	11.5(3.2)

In cases where the hydraulic gradient crosses deep defiles in the terrain, heavier wall pipe may be required to prevent exceeding the MAOH at these locations. Increased friction loss is determined for these locations similar to this example, or by accumulating the distance and friction loss for each of the selected wall thicknesses.

System Growth and Station Bypass. Many pipeline systems are designed to operate, initially, at a reduced flow rate, with increments added in subsequent years. The design basis for these systems is usually the economic-maximum future flow rate, considering oil characteristics, pipe diameter, wall thickness, and grade of steel.

During the early years of operation, only the stations necessary to transport the initial flow rate are installed. Stations are then added as flow rate is increased until the pipeline is fully developed. Intermediate pumping stations are installed at locations determined from the design for the maximum flow rate. As part of the system design, each station, except the first, is omitted from the system to establish the maximum flow rate possible through the system for that configuration. In other words, each omitted station creates a bottleneck in the system at some maximum flow rate.

Example C5.9. The bypass operating conditions for the NPS 20 (DN 500) and NPS 24 (DN 600) pipeline systems are shown in Fig. C5.10 and C5.11.

The hydraulic gradient bypassing a single station is drawn, and the unit head loss determined, graphically or numerically. Then, using the unit friction-loss graph constructed earlier for the specific crude oil transported in the system, Fig. C5.5, the limiting flow rate is found. In Fig. C5.10, the section between stations 1 and 3 is a bottleneck section that limits the flow rate to 116,800 BPOD (20,800 m^3/d.)

Designing for bypassing station 2 in the NPS 20 (DN 500) and NPS 24 (DN 600) systems would use 19 and 24 (nominal) miles (31 and 40 km) of 0.312-in (7.9 mm) wall pipe respectively, as illustrated in Figs. C5.10 and C5.11. Pipe tonnage would be adjusted upward as shown in Tables C5.8 and C5.8M to

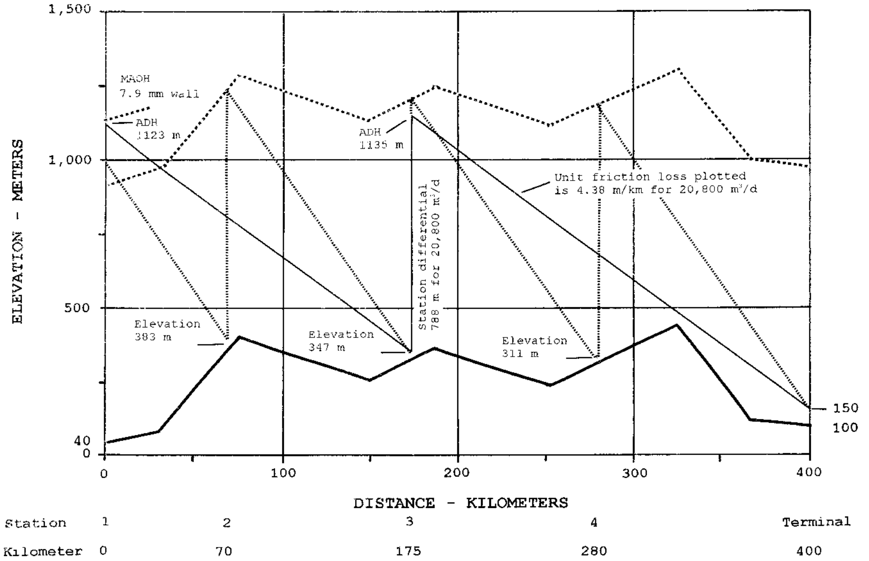

FIGURE C5.10 Hydraulic gradient for DN 500 pipeline example, 20,800 m³/d with bypass at stations 2 and 4.

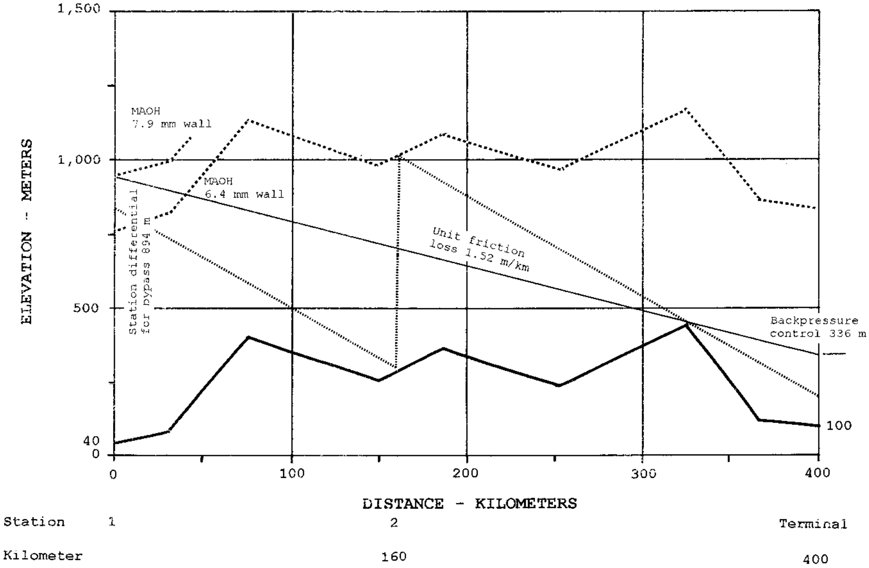

FIGURE C5.11 Example hydraulic gradient for DN 600 pipeline, 18,900 m³/d with bypass at station 2 and profile control point at kilometer 325.

reflect the effect of ground-elevation profile on the mechanical design and cost. Additional heavier wall pipe would be inserted in other locations where the MAOH would lie below the hydraulic gradient to accumulate the appropriate pipe tonnage. Additionally, the increasing wall thickness adds to the friction loss. In this case, the added friction loss would appear at station 1 and increase the pumping power at this station.

Figures C5.9 and C5.11 for the NPS24 (DN 600) pipeline illustrate a hydraulic control point establishing the elevation of the hydraulic gradient out of a station. The elevation added to clear a hydraulic control point adds to the static head difference for pumping. In Fig. C5.9, the added head for the design flow rate shifted the intermediate pump station closer to the hydraulic control point than for a level line. The added head was then moved to station 1 by limiting the discharge head at station 2 to the MAOP of NPS 20 (DN 500) wall pipe.

In this case, 0.312-in (7.9 mm) wall placed at station 1 for the design flow rate is available for increasing flow rate when bypassing station 2. The incremental length of 0.312-in (7.9 mm) wall pipe at station 1 to bypass station 2 is 25 mi (40 km) to utilize the available MAOH of 0.312-in (7.9 mm) wall pipe at station 1, which is illustrated in Fig. C5.11 Placing any length of 0.312-in (7.9 mm) wall pipe at station 2 would not be available for improving the flow rate to bypass station 2.

Depending upon the ground profile and the length of the system, bypassing one station may also allow bypassing other stations and redistributing units of pumping energy among the remaining stations, as illustrated for the NPS 20 (DN 500) system in Fig. C5.10. This same analysis can also be used to establish the logical growth pattern for installation of intermediate stations.

Once the logical growth pattern has been established, and the hydraulic gradients plotted for each stage of growth, it is possible to identify sections of the pipeline where different wall thicknesses, material with higher yield strength, or reductions in line diameter may be economical. When the pipeline system is fully commissioned and operating, this design becomes the operating design for the system when any station is bypassed.

System Curves. The basis for selecting the actual type and size of pump unit(s) at a station is aided by plotting the resistance curve for the section the station must deliver energy to and superimposing it on the characteristic operating, or performance, curve of the pump(s) being considered.

The system-resistance curve is constructed using the unit head loss curve, such as Fig. C5.5. For several flow rates, h_f is multiplied by the distance to the next station, resulting in the friction loss in that section of pipeline for each of the several flow rates. A graph can be constructed this way for a range of operating flow rates. Superimposed on this is the head required to overcome elevation changes between two stations, or the elevation of a critical profile point, plus an allowance for station losses resulting from flow-through fittings, control valves, et cetera. The resulting curve is the system-resistance curve and is concave upward, i.e, the total friction head increases at a faster rate than flow rate increases.

Example C5.10. Figure C5.12 is the system-resistance curve for Station 1 of the NPS 20-(DN 500) diameter example.

A pump unit of a given model and size can deliver a specific quantity of flow at a given discharge pressure or head. Pump manufacturers publish this information in the form of head-capacity curves, otherwise known as pump-performance curves. Performance curves for centrifugal pumps are characteristically concave downward, i.e., delivered head decreases as capacity increases for a given model.

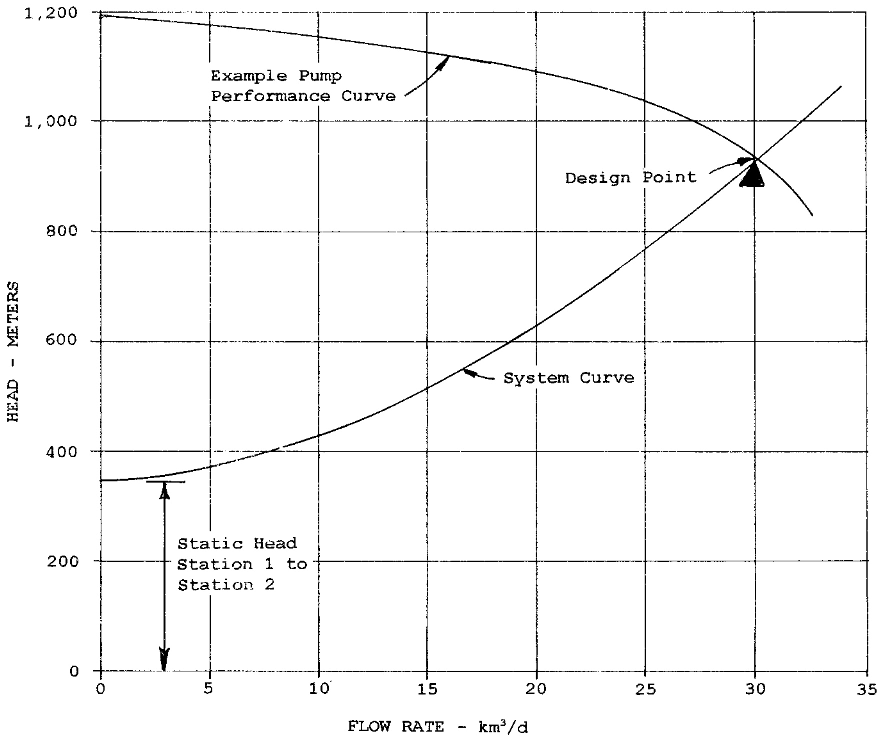

FIGURE C5.12 System curve for Station 1 with example pump-performance curve.

Superimposing a pump-performance curve on the system-resistance curve results in an intersection of the two curves, which is the operating point of the pump units at the station. The configuration of multiple pumps at a station is also considered. For example, pumps in parallel result in increased capacity without a similar increase in head delivered. Pumps in series yield increased head at a given capacity, which is roughly additive.[13,14] Therefore, the net performance curve of the combination of pumps at the station and the combination of pump units that satisfies the required pumping head and power requirements most efficiently are selected for that station.

Nonisothermal Systems[15,16]

Up to this point, the discussion of hydraulic design has focused on isothermal pipeline systems. However, in general, the physical properties of petroleum commodities are temperature dependent, and the significance of temperature change varies with the commodity. Therefore, the true nature of liquid petroleum systems is nonisothermal.

Temperature Profiles. The basis for nonisothermal hydraulic design is an analysis of the thermal nature of the system, considering variations of external, or environmental, temperature as well as systemic factors, i.e., flow rate and its effects on friction, including heat generated by friction. The analysis of a particular system's hydraulic design is based on an analysis of the temperature profile for the range of operating conditions.

The temperature profile can be calculated by the following equation (holds for any set of consistent units):

$$T(x) = T(a) + [T(0) - T(a)] \times e^{[-(uAx)/(wcv)]} \tag{C5.10}$$

where $T(x)$ = temperature at distance x along the pipeline, °F (°C)
$T(a)$ = ambient temperature, °F (°C)
$T(0)$ = temperature at the initial point, °F (°C)
u = overall heat transfer coefficient per unit of area, Btu/ (hr-ft-°F) ($\mathrm{W/m^2 \cdot °C}$)
A = pipe surface area per unit of length, $\mathrm{ft^2/ft}$ ($\mathrm{m^2/m}$)
x = distance from initial point, ft (m)
w = weight of fluid per unit of length, $\mathrm{lb_f/ft}$ ($\mathrm{kg_f/m}$)
c = specific heat of fluid, $\mathrm{Btu/lb_f \cdot °F}$ ($\mathrm{J/kg_f \cdot °C}$)
v = velocity of fluid, ft/s (m/s)
J = joule, N · m
W = watt, J/s

Hydraulic designs for heavier commodities, such as heavy crude oils and residual fuel oils, are influenced largely by the effect of temperature on viscosity and related friction losses. For lighter commodities, such as gasoline and natural gas liquids (NGL), hydraulic friction losses diminish continuously with declining flow rate, but for some heavy commodities, continuing reduction of flow rate may cause an increase in pump-station discharge pressure to overcome the fluid's resistance to motion by increasing viscosity. Hydraulic design for the lighter commodities, although relatively independent of viscosity, is more dependent on vapor pressure, which is also a function of temperature.

In the discussion of isothermal oil systems, Fig. C5.5 illustrated that at constant flow rate, unit friction loss increases with declining temperature, and that at constant temperature, unit friction loss reduces with declining flow rate. In nonisothermal systems, temperature typically decreases at increasing distance from a heating station, increasing the unit friction in the direction of flow, which is illustrated in Fig. C5.13. Generally, total friction loss in a hotoil pipeline decreases with declining flow rate as in isothermal systems. However, for some commodities, friction loss reaches a minimum, then increases at lower flow rates. Figure C5.14 shows that pipeline friction for 113,200 BPD (18,000 $\mathrm{m^3/d}$) lies above the pipeline friction for 150,950 BPD (24,000 $\mathrm{m^3/d}$) at distances greater than 53 mi (85 km), and above 188,700 BPD (30,000 $\mathrm{m^3/d}$) at distances greater than 65 mi (105 km). Figure C5.14 includes the beneficial effect of heat of friction. Friction loss would be greater if heat of friction were ignored.

Heat of Friction. In a flowing fluid, the pressure dissipated by friction becomes heat. The effect of friction heating generally increases with flow rate, viscosity, insulation, and line length. Heat of friction should be considered at high flow rates to assure that overheating will not occur. Pipeline insulation to reduce heat loss during cold weather may contribute to overheating in summer.

When heat of friction is considered, the limit of cooling while the line is operating can be obtained by adding the temperature offset by heating to the ambient tempera-

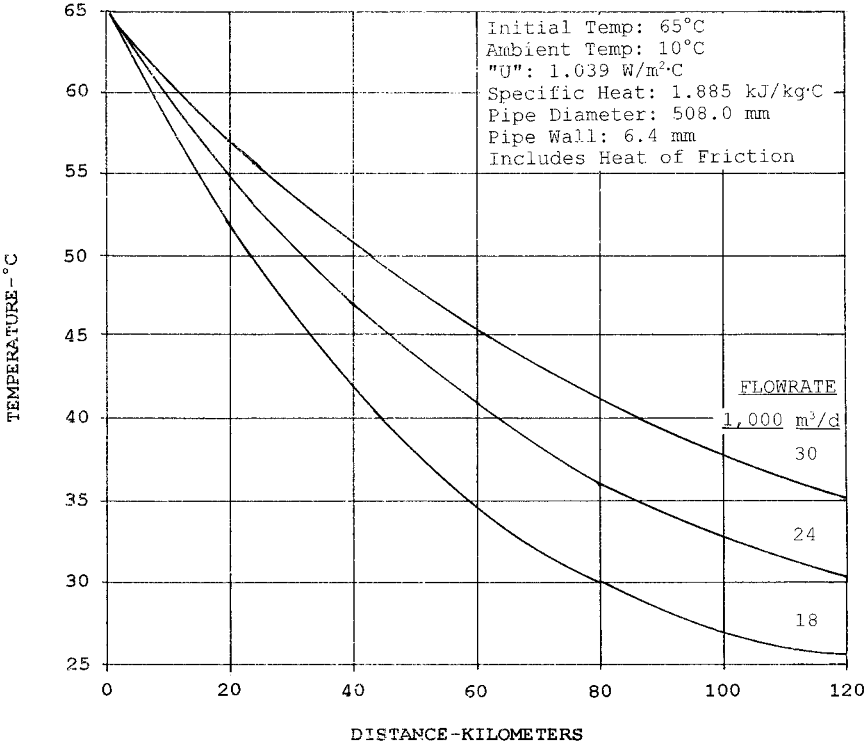

FIGURE C5.13 Example temperature profiles for DN 500 hot-oil system, 18-, 24-, and 30-thousand m^3/d.

ture. The temperature offset is calculated by solving the heat-flow equation for temperature difference where the heat flow equals the frictional heat generated by a unit length of fluid flowing in the pipe:

$$(T - T_A) = Q/(u \times A) \tag{C5.11}$$

where Q = unit heat of friction, Btu/ (h · ft) (J/s · m)
u = heat transfer coefficient per unit of area, Btu/ (h · ft^2 · °F) (W/m^2 · °C)
A = pipe surface area per unit of length, ft^2/ft (m^2/m)
T = flowing temperature, °F (°C)
T_A = ambient temperature, °F (°C)
J = joule, N · m
W = watt, J/s

The heat of friction, Q, can be calculated by converting the unit friction loss to heat, and multiplying by the weight of fluid per unit length and velocity in m/sec.

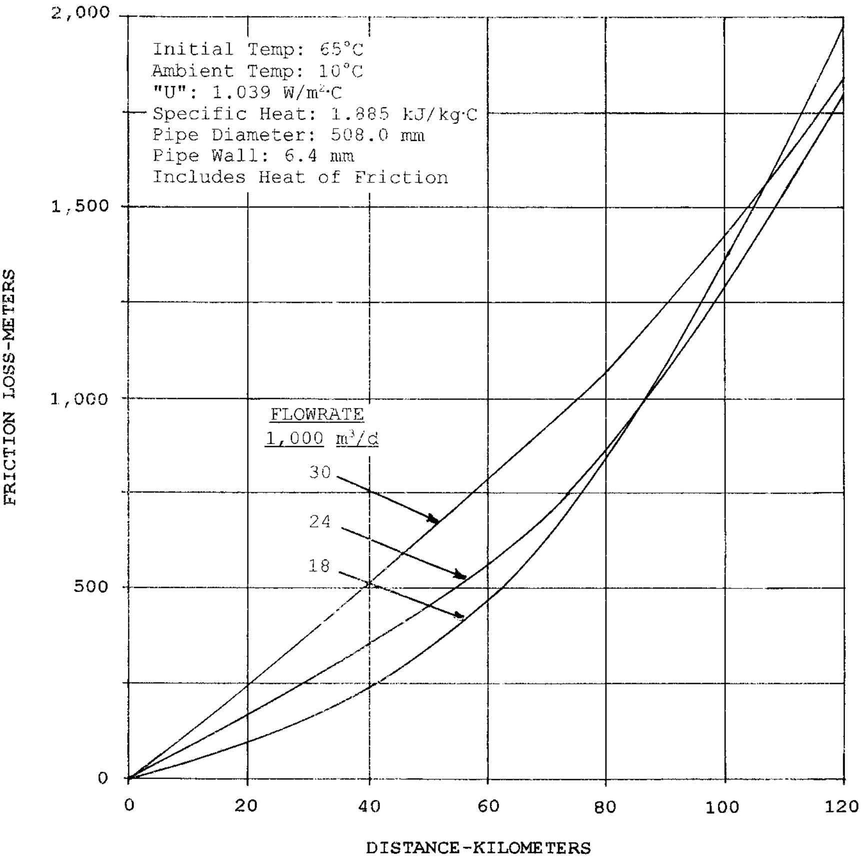

FIGURE C5.14 Example DN 500 pipeline friction versus temperature, 18-, 24-, and 30-thousand cubic meters per day.

For large diameter pipelines and high flow rates, heat generated by friction loss should also be included in the temperature profile, and the following equation results:

$$T(x) = [T(a) + Q/uA] + \{T(a) - [T(a) + Q/uA]\}e^{[-(uAx)/(wcv)]} \qquad \text{(C5.12)}$$

where Q = heat generated per linear unit of flowing liquid in a unit of time by converting the unit friction loss to thermal units as previously described.

Example C5.11. Figure C5.13 shows calculated temperature profiles versus distance, including heat of friction, for a 0.976-specific gravity- (976.0 kg_f/m^3) density crude oil, flowing between 113,200 BPD (18,000 m^3/d) and 188,700 BPD (30,000 m^3/d) in a NPS 20-(DN 500) diameter pipeline.

Figure C5.14 shows friction loss as a function of the distance from a pumping and heating station, with an initial temperature of 149°F (65°C) to correspond with the temperature profiles of Fig. C5.13.

Thermal-Hydraulic Gradients

For initial hydraulic designs, once the temperature profile is determined, the system can be divided into discrete sections and the thermal-hydraulic gradient calculated for appropriate sections using the average viscosity of the successive sections. Station locations and sizes are then determined in the manner described for the isothermal case.

For a more detailed hydraulic design, it is recognized that the hydraulic gradients of nonisothermal systems are curves of increasing friction loss as a result of cooling, as the distance from the pumping and heating station increases, unless heat of friction is a significant factor, such as in a large diameter line at high flow rates and with a low initial temperature, wherein temperature may actually increase with distance from the station.

Example C5.12. Table C5.4M and Fig. C5.15 illustrate the hydraulic gradients of a pipeline system for 0.976 sg–(976.0 kg_f/m^3) density crude oil along the given route, for three flow rates—113,200 BPD (18,000 m^3/d), 150,950 BPD (24,000 m^3/d), and 188,700 BPD (30,000 m^3/d). The discharge temperature at each station is 149°F (65°C), and the ground temperature is 50°F (10°C).

Table C5.4M illustrates the effect of increasing distance between heating stations by comparing the difference in friction loss between Station 1 and the remaining stations as flow-rate increases.

This example illustrates, by comparison with Fig. C5.8, the effect of characteristics between a 0.8701 and 0.976-relative-density (32.6 and 13.5 API gravity) crude oil on the hydraulic, mechanical, and operating designs that differ between an isothermal and nonisothermal system for a given pipeline route.

The hydraulic and mechanical designs of nonisothermal systems are more detailed than systems within the isothermal range at usual ambient temperatures including the additional effects of temperature on stresses and of materials and components for the operating conditions. Mechanical design is discussed in the following section.

Intermediate pumping and pumping and heating stations would be investigated in this example to determine the effect increasing the average flowing temperature would have on reducing average viscosity and the total friction loss, and on establishing the required wall thickness between pumping stations. Further analysis would also include increasing the temperature of the heated crude leaving the stations and insulating the pipeline and analyzing other pipe diameters.

With some commodities such as heavy and waxy crudes, the effect of friction heating can be significant, and it results in a decrease in the energy required for pumping. The decrease in pumping energy is a factor of how much the viscosity decreases by increasing temperature and how sensitive the flow regime is to changes in viscosity, i.e., pressure drop in laminar flow is a stronger function of viscosity than in transition flow and is a relatively insignificant function of viscosity in the fully turbulent flow regime.

Shutdown and Restart. During periods when flow ceases, fluid in the pipeline cools statically without the heat of friction until flow resumes, or the system reaches

TABLE C5.4 Example: Hot Oil System Station Discharge Heads, NPS 20 System

	Unit	Station 1 at origin			Station 2 MP 46.6			Station 3 MP 108.7			Station 4 MP 174.0		
Flow rate	MBPD	113	151	189	113	151	189	113	151	189	113	151	189
Friction loss	feet	2,067	2,677	4,301	4,451	4,580	4,961	4,455	4,580	4,967	6,522	5,892	6,066
Head at inlet downstream	feet	1,257	1,257	1,257	1,138	1,138	1,138	1,020	1,020	1,020	492	492	492
Head out of station	feet	3,323	3,524	4,301	5,594	5,719	6,106	5,476	5,600	5,988	7,014	6,385	6,558
Station elevation	feet	131	131	131	1,175	1,175	1,175	1,056	1,056	1,056	938	938	938
Suction loss + NPSH	feet	82	82	82	82	82	82	82	82	82	82	82	82
Station differential	feet	3,310	3,310	4,088	4,337	4,462	4,849	4,337	4,462	4,849	5,994	5,364	5,538
Station loss	feet	82	82	82	82	82	82	82	82	82	82	82	82
Pumping head	feet	3,192	3,392	4,170	4,419	4,544	4,931	4,419	4,544	4,931	6,076	5,446	5,620

TABLE C5.4M Example: Hot Oil System Station Discharge Heads, DN 500 System

	Unit	Station 1 at origin			Station 2 km 75			Station 3 175			Station 4 km 280		
Flow rate	1,000 m^3/d	18	24	30	18	24	30	18	24	30	18	24	30
Friction loss	meters	630	691	1,311	1,358	1,396	1,514	1,358	1,396	1,514	1,988	1,796	1,849
Head at inlet downstream	meters	383	383	383	347	347	347	311	311	311	150	150	150
Head out of station	meters	1,013	1,074	1,311	1,705	1,743	1,861	1,669	1,707	1,825	2,138	1,946	1,999
Station elevation	meters	40	40	40	358	358	358	322	322	322	286	286	286
Suction loss + NPSH	meters	25	25	25	25	25	25	25	25	25	25	25	25
Station differential	meters	948	1,009	1,246	1,322	1,360	1,478	1,322	1,360	1,478	1,827	1,635	1,688
Station loss	meters	25	25	25	25	25	25	25	25	25	25	25	25
Pumping head	meters	973	1,034	1,271	1,347	1,385	1,503	1,347	1,385	1,503	1,852	1,660	1,713

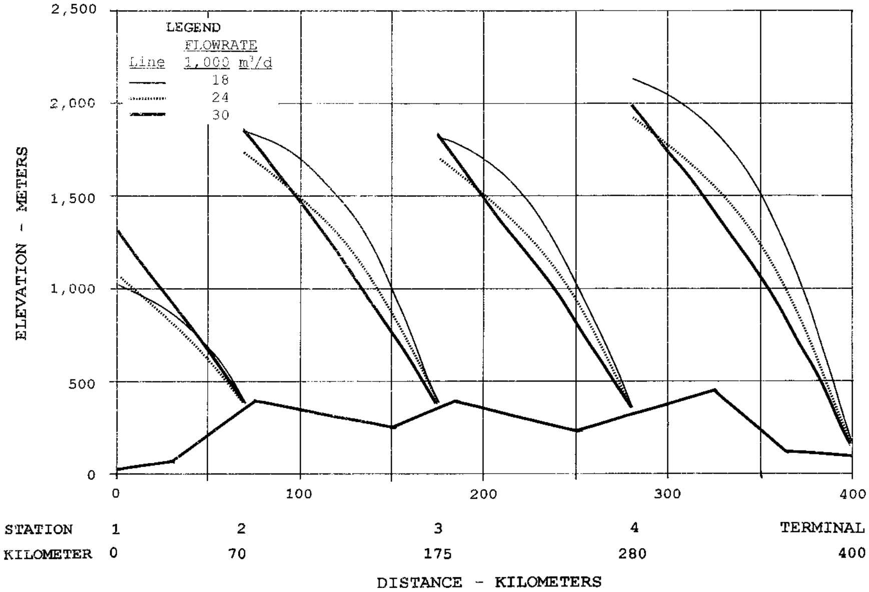

FIGURE C5.15 Example plot of DN 500 hot-oil pipeline hydraulic gradients for 18, 24, and 30 thousand m³/d.

the ambient temperature. During static cooling, the temperature may be calculated by

$$T(t) = T(a) + [T(0) - T(a)] \times e^{-(uAt)/(wc)} \tag{C5.13}$$

where $T(t)$ = temperature at time t, °F (°C)
$T(a)$ = ambient temperature, °F (°C)
$T(0)$ = temperature at the initial point, °F (°C)
t = time from start of static cooling, s
e = base of natural logarithms
u = heat transfer coefficient, $\mathrm{Btu/h \cdot ft^2 \cdot {}^\circ F}$ ($\mathrm{W/m^2 \cdot {}^\circ C}$)
w = weight of fluid per unit length, $\mathrm{lb_f/ft}$ ($\mathrm{kg_f/m}$)
c = specific heat, $\mathrm{Btu/lb_f \cdot {}^\circ F}$ ($\mathrm{J/kg_f \cdot {}^\circ C}$)

On restart, the viscosity, determined by the local temperature, determines the local friction loss. The restart flow rate and pressure may be determined by dividing the pipeline into segments, then summing the friction losses of the segments. Repeating this process stepwise as sequential segments are displaced with heated oil determines the calculated startup pumping rate and restart time. Waxy crudes may develop a yield stress on cooling, which may require additional pressure to reestablish flow.

Figure C5.14 showed that a flow rate can be reached where friction loss can increase for decreasing flow rates. At lower flow rates, where friction loss increases, the friction loss may increase beyond the head capacity of the pumps or the pressure rating of the pipeline leaving the station. This condition would plug the pipeline and must be avoided. Methods of preventing plugging a pipeline that cools below the limit of pumpability, either by low flow rate or static cooling include:

- maintaining the flow rate above the temperature at which the viscosity effect increases friction loss
- blending with a lighter oil having a lower pour point (a cutter stock) to reduce the viscosity at lower temperatures
- displacing with a displacement fluid before static cooling
- insulating and heat tracing

Pipelines using the displacement method generally require preheating before refilling the line with the commodity. These systems are preheated by circulating heated displacement fluid until the system is sufficiently warm to accept the heated commodity and allow time to redisplace if a false start should occur during the refill and restart operation.

MECHANICAL DESIGN

Mechanical design of a pipeline system is the selection of materials, including type of steel and diameter and wall thickness of pipe. Selected also are methods of support and restraint for the system in response to the loadings and stresses imposed on the pipeline system by physical pressures and forces such as the internal and external design pressures; static loadings and weight effects of the pipe, fluid, and soil; dynamic loadings from wind, waves, earthquake, and other natural forces; and relative motion of connected components. These factors impose loadings on the pipe and result in longitudinal, hoop, and radial stresses which must be evaluated in the mechanical design of the piping system.

In addition to the mechanical factors that affect the allowable stress levels for design, the grade of steel and wall thickness determine welding procedures and affect construction cost. Section 434.8 of the Code prescribes the requirements for welding. Section 434.8.3 specifies welding qualifications with reference to API 1104 and Sec. IX of the ASME Boiler and Pressure Vessel Code. The engineer should refer to these references for welding requirements that may determine the maximum diameter, wall thickness, or grade steel for the system on the basis of cost.

The mechanical design of the pipeline, with respect to restraint against longitudinal, or axial, and radial motions, considers the pipeline as a unit and must provide sufficient flexibility in the system to ensure that expansion or contraction, as a result of the internal or external loadings, do not cause excessive stresses in the piping material, bending moments at joints, or excessive forces or moments at points of connection to equipment or at supports.

Mechanical piping-system design primarily utilizes computer programs, many of which operate on personal computers. In most cases, the code requirements are built into the programs, so for a set of internal pressures and external loadings, the program will give the optimum wall thickness, pump locations, and maximum stress values on the basis of parameters input by the engineer. However, this does not preclude the possibility of error. The engineer must be able to determine accurately the required loadings and pressure and to analyze the computer results, verifying their validity to the overall system.

Line Pipe, Fittings, and Valves

Specifications for line pipe and for fittings, valves, and flanges are given in various API, ANSI, and ASME standards and specifications including:

- ANSI/ASME B36.10M, Welded and Seamless Steel Pipe
- ANSI/ASME B36.19M, Stainless Steel Pipe
- API 5L, 5LU, Line Pipe
- ANSI B16.5, B16.9, B16.10, B16.11, B16.25, B16.28, Flanges, Fittings, Valves
- API 6D Pipeline Valves, Gate, Plug, Ball, and Check Valves
- API 600, 602, 603, Valves

Additional information on components of piping can be found in Chap. A2, Piping Components. Chapter A10 deals with selection and application of valves.

Line pipe is manufactured by several methods, the most common being seamless (SMLS), electric resistance welded (ERW), and submerged arc welded (SAW) in the form of longitudinal and helical (spiral) welds. Table C5.5 summarizes some of the characteristics for these four types of pipe manufacture. Each has advantages and disadvantages for different uses, and there are also economic and availability considerations which enter into the decision on the type specified and supplied on a particular project.

With respect to the mechanical design of a pipeline, the characteristic of line pipe which is of critical interest is the specified minimum yield strength (SMYS) of the material. API 5L, Specifications for Line Pipe, is available in various strength grades, ranging from Grade B, rated at 35,000 psi (241 MPa) to Grade X80, rated at 80,000 psi (551 MPa), where the Grade X80 refers to the SMYS in ksi, which is defined as kips per square inch, a kip being 1,000 pounds.

There is some advantage to the higher strength grades, principally that wall thickness may be reduced. In some cases this may have an economic impact on the project, as thinner walls translate into lower steel tonnage for the entire pipeline system, and this may be a significant factor, even though higher grades of pipe cost more per ton. Cost savings can also result from reduced time required to field weld the thinner wall sections. There are other considerations which will affect the decision to use higher strength, thinner wall pipe. These include aspects of construction which are the result of experience in the field, such as the way the pipe handles with regard to field bending, laying stresses, tendency to go *out of round*, et cetera. In addition, there may be limitations placed on the grade of pipe and wall thickness used for a particular project, particularly for a system which will be in *sour* or corrosive service.

Valves, pipe flanges, and fittings are described by class ratings, which are not the same as the rated pressure for a particular class. For example, API 6D, Specification for Pipeline Valves, Class 300 (PN 50) valves, standard flanged end and standard weld end, have a nominal pressure rating of 720 psig at −20 to 100 F° (−29 to 38°C), not 300 psig (91.2MPa). Metric designations, PN for nominal pressure and DN for nominal pipe size replace class and nominal pipe diameter respectively. Refer to Chaps. A1 and A10.

However, API 6D, App. B, states that English units are preferred and are the standard. Section 402.2.1 of the Code specifies for pressure-temperature ratings of piping components as follows: "Within the metal temperature limits of −20°F (−30°C) to 250°F (120°C), pressure ratings for components shall conform to those stated for 100°F (40°C) in material standards listed in Table 423.1."

TABLE C5.5 Availability and Usage for Types of Line Pipe

	Seamless	ERW	SAW, longitudinal welds	SAW, helical (spiral) welds
Minimum diameter	2.375 in (DN 60) or less.	2.375 in (DN 60) or less.	NPS 16 to 20 (DN 400 to 500).	NPS 16 (DN 400).
Maximum diameter	NPS 16 to 26 possible. (DN 40 to 650 possible.)	NPS 24 to 26 possible. (DN 600 to 650 possible.)	64 to 84 in. (DN 1,600 to DN 2,100.)	80 to 100 + in. (DN 2,000 to DN 2,500.)
Maximum wall thickness	0.75 to 2.00 in (19.1 to 51 mm).	0.312 to 0.750 in (7.9 to 19.1 mm).	0.625 to 1.500 in (15.9 to 38.1 mm).	0.500 to 1.500 in (12.7 to 38.1 mm).
Grades	B through X-80. Grades X-60 and higher are heat treated.	B through X-70. X-52 and higher are made from controlled rolled skelp.	B through X-80. X-52 and higher are made from controlled rolled plate.	B through X-70. X-52 and higher are made from controlled rolled skelp.
Service	All services: on and off shore.	All services: generally not used for offshore.	All services: on and offshore.	Experience limited to less critical service; used as equivalent to SAW in other countries.
Relative cost	More expensive than ERW. Cost premium for larger diameters/wall thickness, higher grades.	Less expensive than seamless.	Less expensive than seamless, more than ERW (within size overlap range).	May be less expensive than SAW (depends on manufacturer).

TABLE C5.6 Pressure Ratings of Valves

	Class					
	150	300	400	600	900	1500
Temperature °F	Pressure rating, psig					
−20 to 100	275	720	960	1440	2160	3600
150	270	705	940	1415	2120	3540
200	260	675	900	1350	2025	3375
250	255	665	885	1330	1995	3325

Interpolation is permitted for intermediate temperatures.

TABLE C5.6M Pressure Ratings of Valves

Class (PN)	150 20	300 50	400 68	600 100	900 150	1500 250	2500 420
Temperature °C	Rating, bar						
−29 to 38	19.0	49.6	66.2	99.3	149	248	414
50	18.8	49.2	65.6	98.5	148	246	411
66	18.6	48.6	64.8	97.6	146	244	407
75	18.4	47.9	63.9	96.0	144	240	400
93	17.9	46.5	62.1	93.1	140	233	388
100	17.7	46.4	61.8	92.7	139	232	387
121	16.9	45.9	61.0	91.7	138	229	382

For temperatures below −29°C the rating shall be not greater than rating for −29°C.

Few pipelines now in operation utilize fittings heavier than Class 600 (PN 100), rated at 1,440 psig (9,930 kPa), although the trend is toward higher pressure ratings. Deep-water subsea pipelines which have heavier wall thickness due to laying stresses and high external pressures may have fittings and flanges rated at Class 1,500 (PN 250), rated at 3,600 psi (24,000kPa). Tables C5.6 and C5.6M list maximum operating temperatures and pressures for standard flanged-end and standard weld-end valves by nominal pressure rating, Class (PN), from API 6D, App. B, Table B2.1.

Allowable Pipe Stress

Paragraph 402.3.1 of the Code establishes the allowable stress value, S_A in psi (MPa), to be used in the temperature range −20°F to 250°F (−30°C to 120°C) for design calculations:

$$S_A = \text{design factor} \times \text{SMYS} \times \text{joint weld factor} \qquad \text{(C5.14)}$$

Paragraph 402.3.1 describes application of Eq. C5-11 for allowable stress values of S_A depending on new, used, or reclaimed straight pipe of known or unknown specification. Sub paragraphs 402.3.1 (a) through 402.3.1 (d) are summarized below.

Reference paragraph	Application for straight pipe	Formulations and reference paragraphs
402.3.1(a)	New pipe of known specification	$S_A = 0.72 \times E \times$ SMYS psi(MPa) where E = joint factor, Table 402.3.1(a).
402.3.1(b)	Used or reclaimed pipe of known specification	$S_A = 0.72 \times E \times$ SMYS psi(MPa) in accordance with paragraph 405.2.1(b), Table 423.1, and limitations in paragraphs 437.4.1, 437.6.1, 437.6.3, and 437.6.4.
402.3.1(c)	New, used, or reclaimed pipe of unknown or ASTM A 120 specification	$S_A = 0.72 \times E \times$ minimum yield strength of pipe, psi (MPa) [24,000 psi (165 Mpa) or yield strength determined in accordance with paragraphs 437.6.6 and 437.6.7], and limitations in paragraph 405.2.1(c).
402.3.1(d)	Pipe cold worked in order to meet specified minimum yield strength and subsequently heated to 600°F (300°C) or more except welding.	S_A = 75% of applicable allowable stress value as determined by paragraphs 402.3.1(a), (b), or (c) for design calculations of wall thickness in paragraph 404.1.2 (see Eqs. C5.12 and C5.12M).

Table 402.3.1(a) of the Code tabulates allowable stress values for various grades of material specifications and manufacturing processes.

Specified minimum yield strength of a pipe material is used as the basis of design because it is a property which can be determined for a specific material. Furthermore, steel generally behaves elastically below this stress level. Ultimate yield strength has also been used as the basis for design and may still be used in other countries.

A particular batch of steel line pipe may be tested and determined that its elastic yield strength is higher than the nominal value; however, Section 402.3.1 (g) of the Code specifies, "In no case where the Code refers to the specified minimum value of a physical property shall a higher value of the property be used in establishing the allowable stress value."

Table 402.3.1 (a) also includes the joint weld factor E in calculating allowable stress as a consideration to the way the line pipe is manufactured. In most cases, the joint weld factor is 1.00, but it may be 0.80 or 0.60 for specific grades of steel and welding method of the manufacturing process.

It is useful at this point to clarify a question that arises periodically as to whether the mechanical stress calculations are based on a particular design temperature, i.e., if S_A is temperature dependent. Section 401.3.1 of the Code states "it is not necessary to vary allowable design stress for metal temperatures between −20°F (−30°C) and 250°F (120°C)." However, for applications where ground or air temperature is expected to be extremely low, seasonally or locally, the properties of pipe-component materials at low temperatures should be considered to verify that the design will be adequate.

Allowable stress limits for shear and bearing are given in Sec. 402.3.1(e) of the Code. For shear, S_A shall not exceed 45 percent of SMYS; for bearing, S_A is limited to 90 percent of SMYS. Limits on calculated stresses due to sustained loads and thermal expansion and due to occasional loads in operation and test conditions are specified in Sec. 402.3.2 and 402.3.3 of the Code. In general, these limits fall within the definition of allowable stress given previously; however, special circumstances may apply, and the engineer is encouraged to verify the stresses and relevant limitations.

Pipe Diameter

In the hydraulic design of a pipeline system, line size is initially based on a preliminary choice of diameter and wall thickness from experience and from simplified charts. Further calculations are needed to verify the selection and finalize the system design based on the Code requirements as well as on considerations for project cost and material availability.

For most pipeline systems, the pipe cost, which is based on the diameter and wall thickness, will be the highest material cost in the system. In addition, the size of pipe will have a direct effect on the cost of installation. Therefore, total project cost is impacted by the selection of pipe size. For this reason, it is important to optimize the pipe diameter, wall thickness, and grade of steel to be used so that the overall project cost is contained.

As discussed earlier in the hydraulic-design section of this chapter, the diameter of pipe is based on the design flow rate, and mechanical-design considerations have little effect on diameter selection. However, internal and external pressure, allowable stress, and other considerations do affect the final design of the wall thickness for the selected diameter.

Wall Thickness

In the hydraulic design, a preliminary determination of wall thickness is based on experience for the preliminary selection of pipe diameter and grade of steel. The actual design of a system must reflect Code requirements for the wall thickness, which is based on internal design pressure and additional loads at the design temperature.

Internal Design Pressure. By definition, Sect. 401.2.2 of the Code prescribes the following:

> The piping component at any point in the piping system shall be designed for an internal design pressure which shall not be less than the maximum steady state operating pressure at that point, or less than the static head pressure at that point with the line in a static condition. The maximum steady state operating pressure shall be the sum of the static head pressure, pressure required to overcome friction losses, and any required back pressure. Credit may be given for hydrostatic external pressure, in the appropriate manner, in modifying the internal design pressure for use in calculations involving the pressure design of a piping component (see Para. 404.1.3). Pressure rise above maximum steady state operating pressure due to surges and other variations from normal operations is allowed in accordance with para. 402.2.4.

The earlier discussion of MAOP in the hydraulic design defined it as a function of diameter, wall thickness, and allowable stress for a material, per Code restrictions. Section 402.2.4 of the Code provides for an additional allowance of 10 percent over the internal design pressure for surges and other variations from the normal operation.

Additional Loads. Additional loads for determining wall thickness include loadings applied on a pipeline system from pipeline material and commodity weight, wind, hydrostatic, and other external forces such as impact loads. In some applications, external pressure may be a significant factor in pipeline wall thickness determination. One such example is a subsea pipeline. Section 401.2.3 of the Code specifies that a component of the pipeline system shall be designed to withstand the maximum differential between external and internal design pressures.

Wall Thickness Calculation. Minimum wall thickness, t, is a function of internal pressure, P_i, nominal diameter, D, and the allowable stress, S_A, as specified by Sec. 404.1.2 of the Code by solving Eq. C5-4 for wall thickness. Refer to Eq. C5.4 for determination using various pressure units.

$$t = P_i\ D/(2\ S_A)\ \text{English units} \tag{C5.15}$$

$$P_i,\ \text{psig},\ D \text{ and } t,\ \text{in}$$

$$t = P_i\ D/(20\ S_A)\ \text{metric units} \tag{C5.15M}$$

$$P_i\ \text{gauge pressure, bar},\ D \text{ and } t,\ \text{mm}$$

Nominal wall thickness, t_n, includes an allowance for manufacturing tolerance.

$$t_n = t + \text{allowance}(s) \tag{C5.16}$$

The actual wall thickness used in the system will be equal to or greater than this calculated value. API 5L, Specifications for Line Pipe, Table 6.2, lists commonly manufactured wall thickness for various grades of materials.

With respect to construction and installation of a pipeline, there is also a practical minimum wall thickness, based on handling during installation, as the pipe wall must be able to resist damage and maintain roundness during construction. Good judgement should be used in balancing higher strength steel materials versus heavier wall thickness.

It is not a requirement that wall thickness be constant for the entire length of the system. Specific sections of the system may have different wall-thickness requirements as determined by the internal pressure and other imposed stresses, and making use of the hydraulic gradient developed in the hydraulic design. Thinner wall may be installed at some distance downstream of pumping stations as the operating pressure in the system declines. There are economic benefits to utilizing the minimum wall thickness allowed under Code design; however, there are other considerations, such as complications in construction, i.e., field welding, of a system with frequent variations in wall thickness. Practically speaking, changes in wall thickness should be limited. Furthermore, anticipated growth or expansion of the system capacity should be considered carefully.

Design of Restrained and Unrestrained Pipelines

A pipeline system is subjected to static and dynamic loads due to local environmental and operating conditions, and provision must be made for the system to have flexibility and expansion capability to prevent excessive stresses in the pipe or components, excessive bending or unusual loads at joints, or undesirable forces or moments at points of connection to equipment. The types of loadings which will affect the flexibility and expansion of the pipeline as a system include:

- Thermal expansion and contraction
- Internal pressure
- Fluid expansion
- Pipe and soil–friction interaction
- External pressure
- Bending (sag or uplift) due to

  Dead Loads, including weight of the pipe, coatings, backfill, and unsupported pipe appurtenances

  Live Loads such as liquid transported, wind, snow, earthquake, waves, or currents

The stresses that may develop in the pipe are functions of both the loadings on the pipeline system and the degree of restraint against motion of or in the pipeline system or a section of the system. Stresses may be reduced to acceptable levels by a combination of anchors; extra depth of burial of piping; use of bends, loops, or offsets in the piping; heavier wall-piping components; or other interventions. The reader is referred to Chap. B4, Stress Analysis of Piping Systems, and Chap. B5, Piping Supports, for additional information on stress and supports.

Long, cross-country pipelines are generally buried for the following reasons:

1. Surface use of pipeline corridor
2. Protection from intentional or accidental damage
3. Protection against expansion and contraction from ambient-temperature changes and radiant-energy gains and losses
4. Minimizes variations of ambient temperature and resultant effects on fluid viscosity

5. Provides restraint longitudinally along pipeline length
6. Regulations restrict aboveground installation

Although a buried pipeline can be considered restrained against expansion or contraction radially and longitudinally as a result of the overburden of soil and soil-pipe friction, expansion calculations are necessary, per Sec. 419.6.4 (b) of the Code, if significant temperature changes are expected, as in a heated oil system. Furthermore, thermal expansion of buried lines may cause movement at a transition to an aboveground section and at the termination points of the pipeline or a section of line. There may also be movement where the buried line changes direction, i.e., when there is insufficient soil restraint, therefore either the system should be designed with adequate flexibility in these areas or anchors against motion should be provided.

Pipeline systems may be partially or wholly installed aboveground for reasons of economy of construction, maintenance, et cetera. Likewise, installation on the surface may be practical for pipelines requiring insulation or heat tracing. An aboveground pipeline can be designed with longitudinal restraints at certain support locations such that expansion or contraction due to temperature or pressure changes is absorbed by axial, or longitudinal, compression or tension stress, in addition to radial expansion. The additional consideration in aboveground pipeline systems is that beam-bending stresses in spans between and at supports must be evaluated.

Thermal Expansion and Contraction. Thermal expansion and contraction calculations are necessary for buried and aboveground systems if a substantial temperature change is expected between installation and operation, such as when the line is to carry a hot oil, or where significant variations in local environmental temperatures will occur. Thermal expansion may cause movement where the line changes direction or terminates or where a discontinuity occurs, such as a change in size. In some pipeline systems, these motions may not be restrained by anchors or supports, i.e., absorbed by direct axial stress of the pipe, in which case flexibility must be provided using loops, bends, or expansion joints.

The total maximum range of temperature is used to determine thermal expansion, with the linear coefficient of thermal expansion, α, for carbon and low alloy high tensile steel being 6.5×10^{-6} in/in °F (11.7×10^{-6} mm/mm °C) up to 250°F (120°C). For a section of pipe restrained at both ends, longitudinal stress, $S_{L/T}$, due to a temperature change, ΔT, is given by

$$S_{L/T},\ \text{psi (MPa)} = \mathrm{E}\,\alpha\,\Delta T \tag{C5.17}$$

where E is the modulus of elasticity for steel 30×10^6 psi (2×10^5 MPa). An increase in temperature results in a compressive longitudinal stress, and vice versa. The general convention is that tensile stress is positive and compressive stress is negative.

Internal Pressure. Internal pressure imposes a radial and longitudinal component of stress in the pipe material. The hoop stress, which is in the radial direction due to internal pressure, was discussed earlier in Eq. C5.4. In a free, or unrestrained, section of pipe material, or pipeline system, as internal pressure increases, the length of a section will decrease due to the Poisson effect.

Restrained systems will develop a component of longitudinal stress as a result of the internal pressure, $S_{L/IP}$, given by

$$\begin{aligned} S_{L/IP} &= \nu\, S_H \quad \text{psi (MPa)} \\ &= \nu\, P_I\, D/2\,t \end{aligned} \tag{C5.18}$$

where ν = Poisson's ratio, 0.30 for carbon steel

This is generally a tensile (positive) stress in the longitudinal direction. For most liquid lines, maximum internal pressure will most likely occur during the hydrostatic test prior to operation.

Fluid Expansion. The expansion of the fluid in a liquid pipeline due to increase in temperature will impose an additional component of pressure which will have both a radial and a longitudinal component, resulting in stress in the pipe material. This stress, $S_{L/E}$, is calculated in the same manner as the stresses from internal pressure after conversion of the expansion of the fluid to equivalent pressure terms.

Pipe and Soil–Friction Interaction. The combined longitudinal effects of temperature, pressure, and expansion of the fluid can cause significant stresses in long sections of pipe. For buried pipelines, the interaction of the pipe material and the soil will have an opposing friction effect, with the maximum stress due to soil friction occurring at the midlength of the section. The friction stress is calculated as follows, with any set of consistent units:[17]

$$S_{L/F} = L \times H \times \rho \times \sigma/(2t) \tag{C5.19}$$

where L = length of pipe section, ft (m)
H = depth of cover above the pipe, ft (mm)
ρ = unit weight of the soil cover, lb_f/ft^3 (kg_f/m^3)
σ = coefficient of friction between pipe and soil
t = wall thickness, in (mm)

External Pressure. For sections of pipe laid underwater, external hydrostatic pressure needs to be considered in the stress analysis. The hoop and longitudinal stresses resulting from hydrostatic pressure are calculated in the same way as the internal pressure stresses are calculated and are opposite in sign. A similar condition arises when thin-walled pipe is drained and a vacuum is produced inside the pipe.

The critical collapse pressure, P_{cr}, for round thin-walled pipe with a diameter-to-wall thickness is calculated by the equation:[18]

$$P_{cr} = 2 \times \mathrm{E} \times (t/D)^3/(1 - \nu^2) \tag{C5.20}$$

where E = modulus of elasticity, 30×10^6 psi (2×10^5 MPa)
ν = Poisson's ratio, 0.3

Eq. C5.20 assumes the stress is within the elastic range and the ratio of length to radius is greater than 20. If the pipe section is out-of-round, the resistance to collapse is reduced by flattening. Stiffening rings or heavier wall pipe may be used to prevent or limit collapse due to external pressure. Collapse of buried pipe can also be controlled by careful preparation of the bedding and compaction of the backfill around the pipe. Additional detail is beyond the purpose here, and the reader should refer to appropriate references or specialists where collapse by external pressure is a concern.

Considering all the longitudinal components of stress discussed to this point, the net longitudinal stress, S_L, imposed on a restrained pipeline due to the combined effects of internal pressure, external pressure, temperature, fluid expansion, and soil and pipe friction is the algebraic sum of Eqs. C5.14, C5.15, and C5.16, where tensile stress is the positive convention:

$$S_L = S_{L/IP} + S_{L/EP} S_{L/T} + S_{L/E} + S_{L/F} \qquad \text{(C5.21)}$$

where S_L = net longitudinal stress, psi (MPa)
$S_{L/IP}$ = internal pressure, psi (MPa)
$S_{L/EP}$ = external pressure, psi (MPa)
$S_{L/T}$ = thermal expansion/contraction, psi (MPa)
$S_{L/E}$ = fluid expansion, psi (MPa)
$S_{L/F}$ = pipe/soil friction, psi (MPa)

The net longitudinal stress is generally tensile, as the internal-pressure and fluid-expansion components are tensile, countered by the compressive temperature component and by the soil and friction interaction in buried pipeline systems; the external hydrostatic pressure component is only applicable to deepwater crossings. Concentrated loadings at highway and railroad crossings require special consideration and may require casing. Refer to Sec. 434.13.4 of the Code.

It is important to note that in an axially restrained line, if the increase in temperature between placement of the line and operation is great enough, the compressive stress from the restraint to pipe "growth" by thermal expansion from Eq. C5.17 will exceed the tensile stress due to internal pressure.

The numerical sum of the longitudinal stress and the hoop stress is called the equivalent tensile stress. In the case where net S_L is negative, i.e., compressive, then the absolute values are used for pipe stresses, and the equivalent tensile stress is the sum of the absolute value of S_H and S_L. Section 419.6.4(b) of the Code specifies that the equivalent tensile stress for restrained lines is not to exceed 90 percent of the SMYS calculated for the nominal pipe wall thickness. Stresses may be reduced by burial, anchors, heavier pipe wall components, or expansion provisions such as loops, offsets, or bends. The following section discusses the beam-bending stresses which are included in longitudinal stress calculations for aboveground portions of restrained as well as unrestrained lines.

Bending or Beam Stresses. For most cases, welded pipelines are very stiff longitudinally and make good beams capable of sustaining typical loadings from the weight of the pipe itself, the commodity within, and any coatings applied. However, a bending-stress analysis is a standard part of pipeline system design, in particular aboveground sections, and is generally carried out by an expert, using one of several computer programs available.

When considering the structural nature of a pipeline system, one of two types of *beam* or structural models can be assumed. A buried pipeline or section of a longer pipeline system can be considered continuously supported as long as the bedding it is laid on is uniform. Even if not perfectly uniform, the stiffness of the pipe will allow reasonable spans across low or soft areas in the soil bedding or rock protrusions.[19]

An aboveground pipeline system and a buried pipeline system with nonuniform bedding can be modeled as a continuous beam system with multiple supports. At each support there will be reactions to the loadings on the pipeline due to pipe material, commodity, and coating weights, as well as loadings from environmental factors such as snow, earthquake, and wind.

Beam-bending stresses resulting from sagging (deflection) are included in the analysis of maximum stresses. This means evaluating the pipeline for different loading cases and combinations of loadings. Section 419.6 of the Code provides for the possibility for bending moments in the plane of the pipe (M_i); transverse to the plane (M_o); and torsionally, i.e., about the axis of the pipe (M_t); with the resultant stress due to expansion from bending for unrestrained pipelines in the expansion stress as follows:

$$S_E = \sqrt{S_b^2 + 4 \times S_t^2} \tag{C5.22}$$

where S_E = stress due to expansion
S_b = equivalent bending stress, psi (MPa)
$S_b = \sqrt{(\mathrm{i}_i \times \mathrm{M}_i)^2 + (i_o \times M_o)^2}/Z$
S_t = torsional stress, psi (MPa)
$= M_t/2 \times Z$
i_i = stress intensification factor (in-plane)
i_o = stress intensification factor (transverse)
Z = section modulus of pipe, in^3 (mm^3)

For straight pipe, the stress intensification factors (in-plane and transverse) have a value of 1, therefore the S_b component reduces to the flexure formula ($S_b = M/Z$). Stress intensification factors for elbow, miter bends and tee sections of pipe can be found in Fig. 419.6.4© in the ASME B31.4 Code. This figure also includes a correction of pressure (Note 7) to be applied to large-diameter, thin-walled pipe fittings, as pressure can significantly affect the stress intensification and flexibility of these components.[1]

Code Stress Limits.[1] Sections 402.3.2 and 402.3.3 of the Code specify that the calculated stresses due to sustained loads, thermal expansion, and occasional loads are to be limited by:

- Internal pressure stresses—not to exceed S_A as discussed in the Code paragraph 402.3 (see Sec. 4.2 of this chapter).
- External pressure stresses—considered within bounds where the minimum wall thickness has been calculated based on the code formulas.
- Expansion stresses—allowable stress, S_A, values for the equivalent tensile stress for restrained lines is not to exceed 90 percent of SMYS; for unrestrained lines, it shall not exceed 72 percent of SMYS.
- Additive longitudinal stresses—the sum of longitudinal stresses due to pressure, weight, and other external sustained loadings shall not exceed 75 percent of S_A calculated for the expansion cases stated above.
- Additive circumferential stresses—the sum of circumferential stresses due to internal design pressure and external loads is not to exceed allowable stress calculated for internal pressure.
- Longitudinal stresses from occasional loads—the sum of the longitudinal stresses produced by pressure, live and dead loads, and occasional loads such as wind or earthquake (not considered concurrently), shall not exceed 80 percent of SMYS.

Pump Selection

The concept of pump curves and preliminary pump selection was discussed earlier. Expanding on that discussion, it is assumed that the hydraulic and pipe design are essentially complete. The next step is to choose the pumps and drivers. The first decision is what type of driver—diesel, turbine, or electric. This is primarily an economic decision influenced by the availability of fuel and cost of electric power. When electric power is readily available, electric motors provide simple operation, low cost, and low maintenance; where natural gas or other unrefined fuels are available, gas turbines may give low fuel costs; and occasionally a steam turbine or some combination of machines proves the best choice. It may even be possible to draw off commodity from the system, to fuel the pump drivers themselves, for example, with a diesel transport system.

Pumping power requirements for the entire system can be calculated using the following formula, where H_T and P_T refer to the total system head and pressure requirements:

$$\text{Power, hp} = \text{Flow, BPOD} \times H_T,\ \text{ft} \times \text{sg}/(136{,}000 \times \text{eff}) \qquad \text{(C5.23)}$$

$$= \text{Flow, GPM} \times P_T,\ \text{psi}/(1{,}714 \times \text{eff}) \qquad \text{(C5.24)}$$

$$\text{power, kW} = \text{Flow, m}^3/d \times H_T,\ \text{m} \times \text{rd}/(8{,}810 \times \text{eff}) \qquad \text{(C5.25M)}$$

Pump efficiency in percent typically ranges from 70 to 80 percent for centrifugal pumps to 90 percent for reciprocating pumps. Determination of pumping power for individual stations and pumps is similar, using the head or pressure required for the downstream section between one station and the next. As motor power is provided in standardized increments, the power provided by the motor will exceed the required pumping power.

Example. In the example for the NPS 20 (DN 500) pipeline, assuming 82 percent efficiency for the pumps, the required system operating power at the design temperature is:

$$\text{power, hp} = 188{,}700,\ \text{BPOD} \times 10{,}984,\ \text{ft} \times .8701,\ \text{sg}/(136{,}000 \times .82)$$

$$= 16{,}200 \text{ (rounded)}$$

$$\text{power kW} = 30{,}000,\ \text{m}^3/d \times 3{,}450,\ m \times 0.8701,\ rd/(8{,}810 \times 0.82)$$

$$= 12{,}460 \text{ (rounded)}$$

Specification for the main line pumps should stress performance, efficiency and ease of maintenance, because over the life of a pipeline, the cost of fuel and power will be the major operating or annual expense. Therefore, a percent or two in pump or driver efficiency has a major impact. Consideration should also be given to variable speed contrifugal pumps, on the basis of economics, in order to satisfy varying flow and pressure or head requirements over the life of a pipeline system. It may be that the added cost of a variable speed pumping unit is favorable versus controlling station discharge pressure by throttling.

Valve Spacing

The location and spacing of section block valves along an oil pipeline is a matter of design procedure and may be dependent on factors such as the terrain that the pipeline is crossing. In general, valves should be installed at locations where they will contribute to the safe operation of the line and enhance the safety of the system. Section 434.15.2 of the Code provides the details for these considerations.

Typically, valves are installed at the origin and termination of a pipeline and at branch points to provide isolation of a section and to facilitate hydrostatic testing, i.e., anywhere that the test pressure is differentiated such as sections of higher operating pressure or a change in wall thickness. Section block valves should be located in easily accessible positions, e.g., aboveground on a buried pipeline or in an impervious pit where the groundwater level is high.

OPERATIONS AND MAINTENANCE DESIGN

Operating Conditions

The operating conditions for a pipeline system are defined by the operator of the system and are part of the design basis. Many of the design decisions are directly related to the operating philosophy of the system, both in an intermediate stage, as with a phased or growth system, and in the final system. For example, if the pipeline will be transporting a hot oil, it is critical that the system not be underdesigned, i.e., that the operating temperature be reasonably set, thereby leading to a viable design of the pumping and heating station requirements. Maintenance aspects of the system will also influence the design with regard to location of facilities (near fuel or power sources) and spacing of stations for cleaning facilities (pigging). The aspect of operator training and required level of supervision to monitor and verify the function of the pipeline system may dictate the location of controls and instrumentation readout panels, spacing of head operator and control function locations, and required personnel to operate the facilities.

The following sections discuss some of the specific operation and maintenance considerations for liquid pipeline design.

Surge

An important consideration in the design of liquid pipelines is surge, also known as water hammer. It is comprised of the pressure wave and reflected wave which travel through the fluid up and down a length of pipe when the velocity of the flowing column of fluid is altered or stopped suddenly. For example, water flowing at 10 ft/s (3 m/s) can generate a surge pressure of 500 psi (3400 kPa).

If a valve is closed against a flowing stream or if the velocity of the stream is slowed, as when a pump station is stopped, the kinetic energy of flow is converted to pressure energy and a positive wave is sent upstream at the velocity of sound in the medium:

$$V_s = \sqrt{\frac{BK/\rho}{1 + (KdC)/(Et)}} \tag{C5.26}$$

where V_s = speed of sound through commodity, ft/s (m/s)
B = 4,637 in^2/ft.s^2 for Eng units (1.0 for metric units)
K = bulk modulus of liquid,[8,10] psi (kPa)

ρ = density of liquid, $\mathrm{lb}_m/\mathrm{ft}^3$ ($\mathrm{kg/m}^3$)
d = inside diameter of pipe, in (mm)
E = modulus of elasticity, psi (kPa)
t = wall thickness, in (mm)
C = constant of pipe fixity (0.91 for an axially restrained line, 0.95 for unrestrained)

In the case of a main-line block valve closing instantaneously some distance downstream of a pump station, flow is stopped in the vicinity of the valve but continues to flow from the pump station. The continued pumping packs the line section between the pump and the valve. The surge wave beginning at the valve travels up the hydraulic gradient reaching the pump several seconds later, raising the discharge pressure high enough to reach the shutoff head or setpoint of the pump, causing the discharge check valve to close. This closed valve reflects the wave back toward the valve, reinforcing the incoming wave and resulting in line pressure much higher than normal. This case is exaggerated as instantaneous, while in reality valve closure is not. However, in a real situation such as described, the effect is measurable and can be dramatic.

The surge wave travels upstream and is reflected downstream, oscillating back and forth until its energy is dissipated in pipe wall friction. The amplitude of the surge wave, or the magnitude of the pressure surge, P_{surge}, is a function of the change in velocity and the steepness of the wave front and is the inverse of the time it took to generate the wave:

$$P_{\text{surge}} = B v_s \rho \Delta \mathrm{V} \qquad \text{for } T < 2\mathrm{L}/\mathrm{v}_s \tag{C5.27}$$

where P_{surge} = pressure, psig (kPa)
B = 2.157E–04 for Eng units; (1.0 E–03 for SI units;)
v_S = speed of sound through commodity, f/s (m/s)
ρ = density of liquid, $\mathrm{lb_m/ft^3}$ ($\mathrm{kg_m/m^3}$)
ΔV = total change in velocity of fluid, ft/s (m/s)
$2\mathrm{L}/v_S$ = propagation time, s
T = valve closing time, s
L = distance from inception, ft (m)

This is only an approximation of the surge pressure magnitude for cases limited by the stated time of closure criteria.

Computer programs are utilized to give specific and accurate analysis of the maximum surge pressure, location of critical points in the system, and other factors.

The surges are attenuated by friction, and the surge arriving at any point on the line is less than at the origin of the surge wave. Nevertheless, when flow velocity is high and stoppage is complete, or when a pump station is bypassed suddenly, the surge energy generated can produce pressures high enough to burst pipe, sometimes at points distant from the point of origin of the event.

Another case of surge is when a pump station is shut down suddenly, as in a power failure at an electrically powered station, causing the station to be bypassed automatically. This produces a drastic change in velocity of the flow but not a complete stoppage. As in any other surge, a pressure wave is sent upstream and a refraction wave is sent back downstream from some point in the system where there is sufficient discontinuity to permit total or partial reflection of the wave, i.e., a valve, or major bend in the pipe. The positive surge wave, traveling upstream, reaches the next upstream station, raising both its discharge and suction pressure (with the wave effectively passing counter to flow through the pump since the check valve does not close). It is possible that this situation may shut down the upstream station on high discharge pressure, thereby starting a new surge wave which effectively adds to the first. This pyramiding of surges can travel hundreds of miles knocking down pump station after station in domino style and producing higher and higher pressures upstream. In the downstream direction, the negative wave may shut down stations downstream of the event by starving their suction pressure.

Severe surge problems can be mitigated through the use of quick-acting relief valves, tanks, and gas-filled surge bottles. These facilities tend to be expensive single-purpose devices which are seldom needed and are often inadequately maintained by operators. An inexpensive feature of modern computer-based control systems is the *permissive* circuit, which can be rigged so that the system cannot be operated at a rate above an intrinsically safe level unless all outside parameters are satisfied. The loss of a signal saying for example, that a given station is operating will cause other stations, set points to be backed off to a level consistent with any surge situation.

Design for the control of surges requires a thorough understanding of the particular pipe, pump, valve, and tank systems and their instrumentation. Therefore the total evaluation of the surge problems on a new system must await a fairly complete design (pipe size, wall thickness, taper, profile, flow velocity, tankage requirements, block-valve spacing, number, size and arrangement of pumping units, type of devices, and static-relief systems must be defined). Certain rudimentary surge considerations can be observed from the beginning which will help surge-proof the system. These include:

- Provide interlocks such that all pumping stops before main-line block valves can be closed.
- Low flow velocities ensure that changes in velocity cannot be too great.
- Long station spacing ensures maximum surge attenuation.
- Multiple pumping units at each pump station minimize the opportunity for a complete station failure.
- Looped feeders for electric stations.
- A margin of error between the hydraulic gradient and the MAOP based on wall thickness.
- SCADA communications to prevent upstream pump stations from over pressuring the downstream section.

Section 402.2.4 of the Code addresses the topic of surge pressure, stating that ". . . the level of pressure rise due to surges and other variations from normal operations shall not exceed the internal design pressure at any point in the piping system and equipment by more than 10 percent."

Corrosion Protection[20,21]

Corrosion of a pipeline can be both external and internal. Internal corrosion, apart from exceptional cases of corrosive fluid components such as H_2S, is usually a gradual process resulting in a lowering of pipeline efficiency and is characterized by indentations and pits. Regular line cleaning with scraper *pigs*, discussed later, can be utilized to care for the internal surface of most installations. Internal corrosion can also be controlled by injecting a corrosion inhibitor into the transported fluid.

Another method of reducing internal corrosion is by internally lining the pipe. While there are few examples of existing liquid hydrocarbon pipeline systems using epoxy coatings, they give good protection, long life, and have a low friction factor.

External corrosion is a major factor in the design and operation of a pipeline system; external corrosion can reduce the life of a pipeline and impair its safety. External corrosion is mitigated by application of a pipe coating and the installation of a cathodic protection system. The external coating increases the pipe-to-soil electro-chemical resistance, and the cathodic protection (impressed current or galvanic anodes) system makes the pipe cathodic with respect to the surrounding soil.

There are a number of methods and materials available for external coatings, offering different benefits and a range of cost. Methods include over-the-ditch after welding, and precoating pipe joints at the pipe mill before shipping or in plants located near the jobsite before stringing.

Materials for over-the-ditch include cleaning and priming followed by one or more sequential layers of hot-applied asphalt or coal-tar enamel, felt wrap, and a final wrap of kraft paper. The most recent applications of plant-applied materials are fusion-bonded, thin-film epoxy (FBE), followed by an extruded copolymer adhesive and an extruded polyethylene jacket. (Refer to Chap. B10 for more details on FBE lining and coating.) Consideration for selection of a coating should include, in addition to installation and shipping costs, quality and integrity of the completed coating system as installed and other concerns, such as chemical resistance to soil conditions, stray electrical currents, maximum service temperature, storage and handling, et cetera. Specialty coating systems for thermally insulated pipelines in high-temperature service may require an exterior jacket impervious to intrusion by water vapor.

Further discussion of internal and external coatings and of cathodic protection systems can be found in Chap. C6, Gas Systems Piping. The same material is applicable to liquid petroleum systems.

ASME B31.4 does not specify that an allowance be made for corrosion in determining nominal wall thickness for fluids and services covered by the Code, with the provision that internal and external corrosion control is provided as directed by Chap. VIII of the Code.

Metering

Early methods for monitoring the volume of flow through a liquid pipeline relied on tankage gauge readings at different points along the system. With the development of computer monitoring systems, liquid pipeline systems are now monitored continuously. Metering devices used in the pipeline business today fall into three groups:

- Pressure drop
- Positive displacement
- Turbines
- Miscellaneous, including sonic and vortex meters

The first group measures the pressure drop created when flow is restricted either across an orifice plate or a venturi tube. This type of meter is unable to identify variations in density and viscosity, which may be variable in liquid petroleum services, and therefore is not used for fine measurements except in conjunction with a viscosity or density meter.

The positive displacement group of meters includes a wide variety of mechanical devices which entrap a discrete quantity of fluid and move it physically from one side of the meter to the other. Screws, pistons, buckets, gears, and sliding vanes have been used successfully, especially with viscous fluids, but are subject to wear in continuous, high-capacity low-lubricity situations.

Turbine meters consist of a turbine wheel with tiny magnets mounted axially between sleeve bearings inside a short length of pipe. As the fluid turns the turbine wheel, the rotations are recorded and counted electronically by the passage of the magnets. These meters have been successful because they are simple in design, essentially having only one moving part. The turbine wheel, when in motion, tends to center itself in the pipe so there is almost no bearing friction.

All three of these meter types have their uses. The orifice, because it is rugged and low in cost, is used where exact measurement is not required. Positive displacement meters are used where the fluid is viscous or a high range of viscosity is expected and close measurements are needed for custody transfer. Turbine meters are used for the continuous, high-capacity bulk movement of fluids because they are reliable and accurate over a wide range of flow rates.

The fourth group has more specialized meters. Information on a particular type of meter or installation is available from manufacturers.

Leak Detection

Detection of major leaks is a major concern of pipeline operating companies. Large leaks can be detected with relatively simple instrumentation; however, to detect small leaks requires computer systems that can also monitor and account for variations in temperature, pressure, density, and composition. To illustrate the problem of leak detection, with an order of magnitude comparison, consider that for an NPS 8 (DN 200) line transporting 24,000 BPD (3,815 m^3/d), a detectable deficiency of +/− 2 percent of flow is a 14 gpm (3.18 m^3/h) leak. A 0.2 percent deficiency, detectable only with a sophisticated leak detection system, on a NPS 48 (DN 1,200) line pumping 2.4 MMBPD (381,000 m^3/d), is a 140-gpm (31.8 m^3/h) leak. The hole in the pipe which would leak 140 gpm (318 m^3/h) at gage pressure of 500 psig (34.5 bar) is more that 0.50 in (12.7 mm) in diameter. The hole which would leak 14 gpm (3.18 m^3/h) at the same pressure is less than 0.0625 in (1.59 mm) in diameter.

For years, basic leak detection has been based on the principle of line balance, based on the continuity of flow in the pipeline, i.e., flow in equals flow out. In its simplest form, leak detection can rely solely on readings of flow meters or tank gauges at periodic intervals, with a recurring discrepancy indicating a leak. For line balance to be viable, accurate flow measurements at both ends of the pipeline or section of pipeline must be made and reconciled regularly. In early pipeline systems, minor differences in reading time, temperature, line pack et cetera, made the results somewhat erratic, but a continuous shortage in delivery for several hours was sufficient cause for a line patrol to be sent out or for the system to be shut down and pressure tested. Large leaks or line breaks were detected by comparing suction and discharge pressures with flow at pump stations, e.g., falling discharge pressure combined with increased flow meant a leak downstream; falling suction pressure combined with decreased flow meant a leak upstream.

In modern pipeline systems, computer-based monitoring systems compare flow rates as well as total flow and record the variables of the flow (temperature, viscosity, et cetera) The determination of whether there is a leak in the system is based on the readout differentials. For reliable pipeline surveillance, both short-term (minutes) and long-term (days) calculations should be maintained and compared against respective threshold values.

Perhaps the more important problem in leak detection is location of the leak once it has been detected. While line balance will indicate the magnitude of the leak, other means are required to pin-point the location between two monitoring positions.

A general method for location of a leak is to compare the hydraulic gradient for the flow measured upstream with that of the flow measured downstream, with the intersection of the hydraulic gradients being the approximate leak location. Methods for location of rapidly formed leaks include monitoring the rate of change of pressure and flow (dp/dt and dq/dt, respectively) and the pressure-wave differential which occurs as the result of a rapid leak, propagating from the leak in both directions, with the velocity of sound in the liquid (see surge discussion). Similarly, the transient pressure wave can be monitored with transducers which will detect the transient pressure wave, its magnitude being the generated pressure wave at the leak location delayed exponentially as a function of the distance to the leak and the velocity of sound in the liquid.

More discussion on the theory of these leak detection and location methods can be found in standard hydraulic texts, manufacturer's literature, and in some of the references and bibliography.

Pipeline Pigs

A ‘‘smart’’ pig is an instrumented device which travels internally along a pipeline, monitoring the operating parameters (flow, temperature, etcetera) and the physical condition of the pipe (wall thickness, corrosion, out-of-roundness, et cetera). Pigs are also used to ‘‘listen’’ for the acoustical traces of leaks. Simple pigs, on spheres, are sometimes used to mark the transition between two commodities in a multiproduct pipeline.

The information the pig collects must be relayed to the master control center, and the pumping, heating, or pumping-heating stations along the route must have facilities designed for the handling of pigs, including launching and receiving traps. Additionally, the design for use of pigs may influence the specifications for elbows, tees and valves.

SCADA[23]: Supervisory Control and Data Acquisition

Maintaining the integrity of a pipeline system which spans hundreds of miles (kilometers) is a complicated task, involving the monitoring, measurement, and analysis of a continuous flow of data from meters, pipeline pigs, transducers, and other collecters. Just as critical as collecting the data from source points along the length of the system is the transmission of the data to the facilities of the pipeline operating company, which may be remote from the pipeline itself. There is also the aspect of control and coordination of multiple stations along the system so that they operate in conjunction with each other rather than in opposition.

Early pipeline systems relied on analysis of data at the local station and communication of information by voice over telephone or wireless. The operating philosophy of many pipeline systems today is to limit the number of manned control stations. Today's technology relies instead on SCADA (Supervisory Control and Data Acquisition) systems to collect data from monitor points by fiber optics, microwaves, and satellite-communications technology to transmit the data to control stations. Here, high-speed computers analyze the data and perform on-line control functions required to maintain system parameters within their operating limits. Application of these technologies requires consideration early in the mechanical design to include the operating components for the intended modes of operation and control.

The result of this technology has been to maximize the safety and operating efficiency of the system. Additionally, the collection and storage of operational information over the life of a pipeline system facilitates new pipeline design and operation through the verification of computer models which are used in the design phase to:

- Identify out-of-range operating variables
- Select preferred operations at and among pumping stations to control use of pumping units and cost of energy
- Identify limits for pumping rates and fluid properties of commodities transported
- Predict effects of modifying system facilities, operations, or changing characteristics of commodities transported
- Schedule tenders, or contracts, for transporting commodities by various fluid properties, ownership, source and destination

SYSTEM COST ANALYSIS[22]

The first several sections of this chapter have shown that for a given proposed pipeline, there are many possible pipeline systems which can be assigned to transport the commodity. Selection of the preferred pipeline route, diameter, material, wall thickness, pump-station location, pump units, and operational equipment or facilities is typically the result of economic analysis and investment-capital evaluation of the most reasonable scenarios developed through the design phase.

Typically, even before the detailed design of a pipeline systems has begun, an order-of-magnitude cost study will be performed, with the goal of determining the feasibility of continuing to invest time and capital in the design phase of the project. At this point, a preliminary route may have been selected; however, other possibilities may still exist, and further developments may indicate a change in the assumptions or information available during the preliminary analysis. In conjunction with the hydraulic, mechanical, and operational and maintenance designs, the economic analysis progresses, at times steering the decisions made in the design.

For a typical cross-country pipeline project, the cost of pipe and its associated construction and installation costs can be as much as 80 percent of the capital investment; therefore, the selection of the pipe, with regard to type of material, size, et cetera is very important. Trade-offs can be made during the design process with regard to diameter and wall thickness, grade of steel, and method of manufacture, as discussed in various earlier sections of this chapter. The cost of the pipe itself generally represents 25–50 percent of the total line cost, and the use of a reliable cost, based on current industry information, is significant. Annual cost indexes are published in a number of trade periodicals. Another source of costs for line pipe, as well as component fittings, valves, and installation factors are manufacturing associations and the construction industry publications.

Using the information developed through the earlier example, a comparison of system designs can be made, as shown in Tables C5.7, C5.7M, C5.8, and C5.8M. These tables illustrate the general procedure for selecting an appropriate pipeline system for a specific route. The same comparisons can be made for different routes.

TABLE C5.7 Isothermal Crude Oil System

Comparison of alternative diameters			
188,700 BPOD			
Pipe OD × wall thickness, in	16 × 0.250	20 × 0.250	24 × 0.250
Unit friction loss, ft/mile	132.1	44.1	18.1
Length, miles	248	248	248
Pipe friction loss, ft	32,756	10,934	4,486
Static head, ft	50	50	50
Total head, ft	32,806	10,984	4,536
Total pressure, psi	12,357	4,137	1,709
MAOH, ft	3,580	2,864	2,387
MAOP, psi	1,350	1,080	900
Number of pump stations	9.15	3.83	1.90
Operating horsepower @ 82% efficiency	48,382	16,200	6,690
Preliminary comparative cost comparison			
Capital cost ($1,000)			
Pipeline	16 × 0.250	20 × 0.250	24 × 0.250
Pipe unit weight, tons/mile	111.0	139.2	161.4
Pipe weight, tons	27,528	34,522	40,027
Pipe cost @ $700/ton	19,270	24,165	28,019
Unit installation cost, $/ft	35	40	45
Pipeline installation	45,830	52,378	58,925
Total pipeline cost	65,100	76,543	86,944
Pump stations			
Installed horsepower per station	5,000	4,250	3,500
Base cost per station	1,000	1,000	1,000
Installed horsepower @ $750/hp	3,750	3,188	2,625
Cost per station	4,750	4,188	3,625
Total pump station cost	47,500	16,750	7,250
Total system capital cost	112,600	93,293	94,194
Annual costs			
Insurance @ 1% of installed cost	1,126	933	942
Operating cost			
Pipeline @ 1.5% of installed cost	977	1,148	1,304
Stations @ 3% of installed cost	1,425	503	218
Financing cost (assuming 100% @ 7% of total cost)	7,882	6,530	6,594
Annual power @ $0.08 per kw	23,985	8,031	3,317
Total annual cost	35,395	17,145	12,374

TABLE C5.7M Isothermal Crude Oil System

Comparison of alternative diameters

30,000 cubic meters per day

Pipe size × wall thickness, mm	DN 400 × 6.4	DN × 6.4	DN 600 × 6.4
Unit friction loss, m/km	25.04	8.35	3.42
Length, km	400	400	400
Pipe friction loss, m	10,016	3,340	1,368
Static head, m	110	110	110
Total head, m	10,126	3,450	1,478
Total pressure, kPa	86,406	29,439	12,612
MAOP, kPa	9,366	7,493	6,240
MAOH less NPSH, m	1,073	853	706
Number of pump stations	9.44	4.04	2.09
Operating power @ 82% efficiency, kW	36,584	12,464	5,340

Preliminary comparative cost comparison

Capital cost ($1,000)

Pipeline	DN 400 × 6.4	DN 500 × 6.4	DN 600 × 6.4
Pipe unit weight, tonnes/km	62.5	78.4	94.3
Pipe weight, tonnes	25,000	31,360	37,720
Pipe cost @ $775/tonne	19,375	24,304	29,233
Unit installation cost, $/m	115	131	148
Pipeline installation	46,000	52,400	59,200
Total pipeline cost	65,375	76,704	88,433
Pump stations			
Installed power per station, kW	3,900	3,300	2,700
Base cost per station	1,000	1,000	1,000
Installed power @ $1,000/kW	3,900	3,300	2,700
Cost per station	4,900	4,300	3,700
Total pump station cost	49,000	17,200	7,400
Total system capital cost	114,375	93,904	95,833
Annual costs			
Insurance @ 1% of installed cost	1,144	939	958
Operating cost			
Pipeline @ 1.5% of installed cost	981	1,151	1,326
Stations @ 3% of installed cost	1,470	516	222
Financing cost (assuming 100% @ 7% of total cost)	8,006	6,573	6,708
Annual power @ $0.08 per kw	23,074	7,862	3,368
Total annual cost	34,675	17,040	12,583

TABLE C5.8 Isothermal Crude Oil System

Revised comparison for station bypass condition		
188,700 BPOD		
Pipe OD, in	20.0	24.0
Length of pipe (nominal), mi		
0.0250 in wall	229	223
0.312 in wall	19	25
Unit friction loss, m/km		
0.250 in wall	44.06	18.09
0.312 in wall	45.43	18.55
Pipeline friction, ft		
0.250 in wall	10,090	4,034
0.312 in wall	863	464
Total pipeline fiction, ft	10,953	4,498
Static head, ft	360	360
Number of pump stations	4	2
Station losses @ 15 m per station	200	100
Total pumping head, ft	11,513	4,958
Total pumping pressure, psi	4,341	1,869
Pumping power @ 82% efficiency, hp	16,979	7,312
Adjusted comparative cost		
Capital cost ($1,000)		
Pipeline OD, in	20.0	24.0
Pipe unit weight, tons/mi		
0.250 in wall	139.2	167.4
0.312 in wall	173.2	208.4
Pipe weight, tons		
0.250 in wall	31,877	37,330
0.312 in wall	3,291	5,210
Total pipe weight, tons	35,168	42,540
Pipe cost @ $700/ton	24,617	29,778
Unit installation cost, $/ft	40	45
Pipeline installation	52,378	58,925
Total pipeline cost	76,995	88,703
Pump stations		
Installed power per station, hp	4,300	3,700
Base cost per station	1,000	1,000
Installed power @ $750/hp	3,225	2,775
Cost per station	4,225	3,775
Total pump station cost	16,900	7,550
Total system capital cost	93,895	96,253
Annual costs		
Insurance @ 1% of installed cost	939	963
Operating cost		
Pipeline @ 1.5% of installed cost	1,155	1,331
Stations @ 3% of installed cost	507	227
Financing cost (assuming 100% @ 7% of total cost)	6,573	6,738
Annual power @ $0.08/kw	7,989	3,440
Total annual cost	17,162	12,698

TABLE C5.8M Isothermal Crude Oil System

Revised Comparison for station bypass condition		
30,000 cubic meters per day		
Pipe size	DN 500	DN 600
Length of pipe, km	400	400
6.4 mm wall	369	360
7.9 mm wall	31	40
Unit friction loss, m/km		
6.4 mm wall	8.35	3.42
7.9 mm wall	8.58	3.50
Pipeline friction, m		
6.4 mm wall	3,081	1,231
7.9 mm wall	266	140
Total pipeline friction, m	3,347	1,371
Static head, m	110	110
Number of pump stations	4	2
Station losses @ 25 m per station, m	100	50
Total pumping head, m	3,557	1,531
Total pumping pressure, kPa	30,355	13,067
Pumping power @ 82% efficiency, kW	12,852	5,532
Adjusted comparative cost		
Capital cost ($1,000)		
Pipeline size	DN 500	DN 600
Pipe unit weight, tonnes/km		
6.4 mm wall	78.4	94.3
7.9 mm wall	97.5	117.4
Pipe weight, tonnes		
6.4 mm wall	28,930	33,948
7.9 mm wall	3,023	4,696
Total pipe weight, tonnes	31,952	38,644
Pipe cost @ $775/tonne	24,763	29,949
Unit installation cost, $/m	131	148
Pipeline installation	52,400	59,200
Total pipeline cost	77,163	89,149
Pump stations		
Installed power per station, kW	3,300	2,800
Base cost per station	1,000	1,000
Installed power @ $1,000/kW	3,300	2,800
Cost per station	4,300	3,800
Total pump station cost	17,200	7,600
Total system capital cost	94,363	96,749
Annual costs		
Insurance @ 1% of installed cost	944	967
Operating cost		
Pipeline @ 1.5% of installed cost	1,157	1,337
Stations @ 3% of installed cost	516	228
Financing cost (assuming 100% @ 7% of total cost)	6,605	6,772
Annual power @ $0.08/kW	9,007	3,878
Total annual cost	18,230	13,183

These comparisons also illustrate that consideration should be given to the method of financing and appropriate economic factors, such as system growth and annual operating costs.

The reader should refer to a handbook on financial decision making to learn more about the process of optimum system selection on economic grounds, including the processes of discounted cash-flow analysis.[22]

SPECIAL OIL PIPELINE DESIGN TOPICS

Special Hydraulic Conditions

Pipeline systems which fall under the scope of the Code have a wide variety of physical properties, as was shown in Table C5.1. Furthermore, two of the most important properties—viscosity and vapor pressure—vary with temperature. Earlier sections have discussed pipeline systems having no fluctuation in temperature, therefore the hydraulic system design was simplified. Hydraulic design of nonisothermal systems for heavier commodities, such as heavy crude and residual fuel oils are influenced by the effect of temperature on viscosity and related friction losses. Hydraulic design for the lighter commodities, such as gasoline and natural gas liquids (NGL), is relatively independent of viscosity, but more dependent on vapor pressure considerations.

This section summarizes the special considerations which will arise in the design of multiproduct, high-vapor pressure, hot oil, and non-Newtonian fluid pipeline systems, without attempting to be comprehensive. The reader is encouraged to consult specialists and specific references for more detailed discussions of the design of these systems than can be described here.

Multi-product Pipelines. If the pipeline system is to transport fluids of differing properties such as in a batch-type operation of a multiproduct system, the design fluid should be considered as the fluid producing the greatest friction loss, i.e., with the greatest viscosity at the design operating temperature. Using this fluid assures that all pumping stations have adequate power and all sections between stations have adequate wall thickness to sustain the design pressure and flow rate. Furthermore, multiproduct systems may have intermediate deliveries to the system and discharges from the system, i.e., different flow rates for each pipeline section may need to be considered.

To avoid excessive mixing of products, the system should be designed for flow in the turbulent region. Batching pigs can be used to minimize interface mixing at low flow rates.

A special pipeline application uses a batch-flow technique to transport unlike petroleum products sequentially in a single pipe without significant deterioration of the quality of the products by contamination. An explanation of the principle involves a discussion of laminar and turbulent flow regimes, as given in Chap. B8, Flow of Fluids.

In laminar flow, the molecules travel forward in parallel. Velocity is maximum at the center of the pipe, with decreasing velocity to zero at the pipe wall caused by viscous drag among the molecules and friction at the pipe wall. The standard velocity profile is parabolic over the cross-section of the pipe. Therefore, in the laminar flow region, an interfacial plane between adjacent products would rapidly deteriorate into a bulge, and the trailing product would tend to push through the leading product travelling more slowly near the pipe wall.

In turbulent flow, however, the molecules are in random motion, bouncing off other molecules as well as the pipe wall, and tend to remain in relative position. Therefore the profile of velocity is almost constant over the cross-section of the pipe and the fluid flows more like a ‘‘plug.’’ The interfacial plane between adjacent batches in the pipeline tends to remain in place as the products proceed down the pipeline. Some mixing occurs, principally by diffusion, and is more a function of length (time) of transport than velocity. The amount of contamination of the leading product by the trailing is the same as the contamination of the following by the leading. The transition from one product to another, as the interfacial zone passes a point, takes the shape of a sine wave. At some point as the interface wave passes the switching manifold, the flow is diverted to separate storage or distribution facilities. The contamination of one product in another is controlled by timing the *cut* or diversion. One way this is done is to place a gravitometer some distance upstream of the receiving terminal and to record its signal at the terminal so that the receiving operator has a preview of exactly what the interface will look like on arrival. From a design point, a batch flow pipeline has several hydraulic gradients, at least one for each product, as well as for the mixing zone.

High Vapor-Pressure Pipelines. High vapor-pressure systems are characterized by low density, low viscosity, and the necessity to operate the system at elevated pressure to maintain the fluid as a single phase in the pipeline. Single phase is maintained throughout the pipeline by maintaining the elevation of the hydraulic gradient above the ground profile by more than the head equivalent of the local vapor pressure. Back-pressure regulators may be installed in terminals to maintain the required elevated gradient. In this sense, the design of high vapor-pressure lines differs from crude-oil pipelines in that the parameter governing design is the vapor pressure, directly related to temperature, rather than viscosity, which is on maximum temperature, where maximum vapor pressure occurs, versus the maximum viscosity or minimum temperature point which is the design basis of highly viscous fluid systems.

Waxy and Heavy Crude Oils. One treatment for waxy and heavy crude oils is to heat the commodity as part of the transport operation. This concept was discussed earlier under nonisothermal hydraulics.

Chemical additives have also been used in oil pipeline systems to improve flow, i.e., reduce the drag of heavy and waxy crudes. Initially developed to enhance oil-well fracturing, these additives are hydrocarbon-based polymers. The additives are solutions of a high molecular–weight copolymer or polyolefin in a hydrocarbon solvent. Being a hydrocarbon, it distills according to the volatility of its fractions and is not distinguishable from the hydrocarbons originally present in crude oil. The additive reduces the turbulent flow, effectively expanding the transition flow region. It is injected into the flowing pipeline stream by a compact, skid-mounted chemical injection module consisting of injection pumps, positive displacement flowmeters with totalizers, and miscellaneous instrumentation. The polymer itself is so viscous that an inert gas, such as nitrogen, is used to help transfer the material from tank to pumps.

Injection of the additive must be at every station on a system, because the polymer is degraded by the action of centrifugal pumps. Initially it was thought that only very large diameter pipelines could benefit from the use of drag reducers.

Widespread tests have demonstrated that smaller crude and product lines can also benefit.

Multiphased Flow. The presence of gas and liquid phases of a product in sections or in the entire pipeline length has been mentioned in the discussion of slack flow. Multiphased flow is particularly a factor in flow lines used to gather the produced gas-oil-water mixture from wells in a production field and transport it to separation facilities. Detailed knowledge of phase-equilibrium conditions and related product properties as well as specific multiphased flow energy and hydraulic conditions is required for the design of these systems. Computer programs have been developed to include the possibility of multiphased flow and are commonly employed for the solution of the hydraulic design of this type of system.

Seismic Considerations

The entire topic of designing facilities and systems, including pipeline systems for earthquakes, is of major importance in many parts of the world. With consideration to pipeline design, three major seismic hazards for buried pipelines are landslides, liquefaction of soil under and around the pipe, and differential fault movement and ground rupture. Ground motion (shaking) itself is a major consideration in the design of stations and terminal facilities and aboveground supports of a pipeline, but has less effect on buried pipelines.[24,25] Differential settlement and faultline shifts with vertical and horizontal displacement will impose additional longitudinal stresses on the pipe material.

In route selection, a survey of alternate routes should consider evidence of past landslides, i.e., movement of the ground triggered by a seismic occurrence. Slopes showing signs of recent instability or movement may be candidates for further disturbance in event of an earthquake. If slope instability involves deep translations and rotational displacement, the potential ground movements in the area may be large, and relocation of the pipeline may be more cost beneficial than expensive stabilization measures. If instability involves slumps and shallow slides, slope stabilization may be effective. In any case, seismic and geologic specialists should be consulted.

In saturated, cohesionless soils, for example, nonplastic silts and medium-dense sands, liquefaction may be the major hazard wherein the soil temporarily is transformed into a liquid state, losing shear strength and bearing capacity. Liquefaction leads to lateral spreading, loss of bearing capacity, and uplift of buried pipe due to increased buoyancy. Several measures can be taken to design a pipeline system crossing areas susceptible to liquefaction, including designing for moderate deformations as a result of uplift during an event, limited burial in the area, and adding weight coatings, thereby limiting uplift. Operationally, additional line block valves for shut-off in case of a failure following an earthquake may need to be provided.

Fault movement is the most dramatic earthquake occurrence, and potentially catastrophic for a pipeline. Pipeline alignment in fault zones should be such that the expected fault movement will produce tensile stresses in the pipe. If compressive stresses result, buckling may occur. The line should be laid in relatively straight sections, crossing the fault at an angle of 60 to 90° and without abrupt changes in direction or elevation, a procedure which might serve as an anchor during an earthquake. Depth of cover should be minimal, thereby reducing soil restraint, and the backfill material should be granular, medium-range soft sand without large stones, placed well around the pipe to allow relatively free movement.

Two of the references, “Guidelines for the Seismic Design of Oil and Gas Pipeline Systems,”[24] and “Seismic Design of Oil Pipeline Systems”[25] have additional material on the location and operation of pipelines across earthquake fault zones.

Underwater Pipeline Design[26,27]

The subject of underwater pipeline design, in particular ocean or deepwater pipelines, is worthy of a separate chapter. Yet it is important to reference some of the related topics here, particularly about the section of a pipeline system that may cross a river or lake, requiring placement underwater. There are generally two types of underwater pipelines—those that cross a relatively short distance and represent a minimal portion of the entire system design, e.g., a river crossing; and the submarine pipeline, which is primarily underwater. River crossings of a pipeline can be made by pulling the pipe string previously welded onshore, or by laying the pipeline into a trench beneath the depth of scour, then covering with protective backfill. Directional drilling techniques to drill under the riverbed are available where soil conditions, distance, construction space, and pipe properties are amenable. However, the design of an underwater, or submarine, pipeline has several special considerations, which may or may not also be major considerations in river crossings of terrain pipeline systems. The reader is referred to specific handbooks on the design of ocean pipelines for more specific information on this topic.

If a body of water is to be crossed as part of a terrain pipeline and the decision is made to place the line underwater, a hydrographic survey of the area should be initiated. In addition to as much information as possible about the potential route, other hydrographic data are required, such as current and tidal data, weather records, wave height and patterns, possible underwater obstructions along the route, and sources of impact such as dragging anchors. Selection of the landfall location is also an important element in the route selection.

External pressure, discussed earlier, will be greatest on the empty pipeline after placement. The tendency of the pipe to buckle under external pressure should always be checked and design of buckle arresters, i.e., stiffer sections, included in the design to limit buckle propagation.

Selection of the material for the pipeline should take into consideration that the stresses during the laying operation may govern the mechanical design. Note that these stresses do not occur in conjunction with internal pressure. The laying

TABLE C5.9 Conversion Factors, Length

To obtain → Multiply ↓ by ↘	mm	in	ft	m	mi	km
Millimeter	1	0.03937	0.003281	0.001	6.2137E-7	1.000E-6
Inch	25.4	1	0.08333	2.540E-2	1.5783E-5	2.540E-5
Foot	304.8	12	1	3.0480E-1	1.8939E-4	3.048E-4
Meter	1000	39.37	3.2808	1	6.2137E-4	1.000E-3
Mile	1.6093E6	6.336E4	5.280E3	1.6093E3	1	1.6093
Kilometer	1.0000E6	3.937E4	3.2808E3	1.000E3	6.2139E-1	1

TABLE C5.10 Conversion Factors, Hydraulic Gradients

To obtain → Multiply ↓ by ↘	kg$_f$/cm^2/km	kPa/km	psi/mi	ft$_{hd}$/mi	m$_{hd}$/km
kg$_f$/cm^2 per km	1	98.0665	22.8892	52.828/rd	10/rd
kPa per kilometer	0.0102	1	0.2334	0.5387/rd	0.10976/rd
psi per mile	0.04369	4.2843	1	2.3077/rd	0.4371/rd
foot$_{hd}$ per mile	0.01893*rd	1.8564*rd	0.4333*rd	1	0.1894
meter$_{hd}$ per kilometer	0.10*rd	9.8067*rd	2.2879*rd	5.280	1

rd = relative density: absolute density of fluid divided by density of water @15°C and 101.325 kPa, where density of water is taken as 1000 kg/m^3. Subscript hd = head in column of liquid at the density of the fluid.[6,7]

stresses can be categorized as direct pulling stresses, from welding onshore and pulling into location or from the tension of laying from a laybarge; bending stresses as the pipe is lowered to the riverbed or seabed; torsional stresses induced during the laying operation; and current and wave stresses during tow and placement.

Pipeline stability, once in place, is another consideration to ensure security of the pipeline. If additional weight is required, it can be provided by weights or anchors placed at intervals or by continuous weight coating. Placement of the pipeline in a trench and covering with protective backfill is another alternative.

TABLE C5.11 Conversion Factors, Pressure

To obtain → Multiply ↓ by ↘	lb$_f$/sq in	lb$_f$/sq ft	kg$_f$/sq cm	bar (b)	kPa
Pound$_f$ per square inch	1	144	0.070307	6.89476E-2	6.89476
Pound$_f$ per square foot	6.943E-3	1	4.883E-4	4.787E-4	0.04787
Kilogram$_f$ per square centimeter	14.223	2048.1	1	0.9807	98.0665
Bar	14.504	2088.6	1.0197	1	100
Kilopascal	0.14504	20.89	0.010197	0.0100	1

Unit Conversion Tables. Tables C5.9, C5.10 and C5.11 provide unit conversion factors for length, hydraulic gradient, and pressure, respectively. Refer to App. E1 also.

REFERENCES

1. ASME B31.4a–1994, Pipeline Transportation Systems for Liquid Hydrocarbons and Other Liquids, American Society of Mechanical Engineers, New York, 1994.
2. API SPEC 5L—Specifications for Line Pipe, American Petroleum Institute, Washington, DC, 1992.
3. API 6D—Specification for Pipeline Valves (Gate, Plug, Ball, and Check Valves), American Petroleum Institute, Washington DC, 1991.
4. ASME B16.5—Pipe Flanges and Flanged Fittings, NPS 1/2 through NPS 24, American Society of Mechanical Engineers, New York, 1996.
5. ASME B16.34-Valves—Flanged, Threaded and Welding End, American Society of Mechanical Engineers, New York, 1996.
6. ASTM 1250—Manual of Petroleum Measurement Standards, Chapter 11.1, Vol. VIII, API Standard 2540, American Petroleum Institute, Washington DC, 1993.
7. API Publication 2564—Manual of Petroleum Measurement Standards, Chap. 15-Guidelines for the Use of the International System of Units (SI) in the Petroleum and Allied Industries, American Petroleum Institute, Washington DC.
8. C.B. Lester, *Hydraulics for Pipeliners*, Vol. 1: Fundamentals, 2nd ed., Gulf Publishing Company, Houston, TX, 1994.
9. ‘‘Flow of Fluids through Valves, Fittings, and Pipe, ’’ Technical Paper no. 410 by Crane Company, New York, 1981.
10. *GPSA Engineering Handbook*, Revised 10th ed., Gas Processors Supplies Association, 1994.
11. ASTM D341–Standard: Viscosity-Temperature Charts for Liquid Petroleum Products, American Society for Testing and Materials, 1993.
12. E.F. Brater and H.W. King, *Handbook of Hydraulics*, 7th ed., McGraw-Hill, New York, 1996.
13. *Cameron Hydraulic Data*, 17th ed. (C.C. Heald, ed.), Ingersol-Rand, Woodcliff Lake, NJ, 1992.
14. R.H. Warring, *Pumps: Selection, Systems and Applications*, 2nd ed., Gulf Publishing, Houston, 1984.
15. C.L. Arnold, ‘‘Temperature Effects on Hydraulics and Fluid Mechanics,’’ presented at 1981 Annual Pipeline Design and Construction Symposium, Dallas, TX, April 30, 1981. *Oil and Gas Journal*, June 15, 1981.
16. P.E. Ford, J.W. Ellis, and R.J. Russell, ‘‘Pipelines for Viscous Fluids, ’’ Proceedings of the Fourth World Petroleum Congress–Section VIII/B, 1964.
17. J. Vincent-Genod, *Fundamentals of Pipeline Engineering*, Gulf Publishing, Houston, 1984.
18. S. Timoshenko, *Strength of Materials, Part II, Advanced Theory and Problems*, 3rd ed., Robert Krieger Publishing, New York, 1956, p. 189.
19. R.K. Watkins, ‘‘Longitudinal Stresses in Buried Pipes,’’ *Advances in Underground Pipeline Engineering*, American Society of Civil Engineers, New York, 1985.
20. R. Galka and A.P.J. Yates, *Pipe Protection: A Review of Current Practice*, 2nd ed., British Hydromechanics Research Association, Bedford, England, 1984.
21. M.E. Parker and E.G. Peattie, *Pipeline Corrosion and Cathodic Protection*, 3rd ed., Gulf Publishing, Houston, 1984.

22. C.U. Ikoku, *Economic Analysis and Investment Decisions*, John Wiley, New York, 1985.
23. R.J. Williams, *Handbook of SCADA (Supervisory Control & Data Acquisition) Systems*, PennWell Publishing Company, Tulsa, Oklahoma, 1995.
24. ‘‘Seismic Response of Buried Pipes and Structural Components,’’ a report by the ASCE Committee on Seismic Analysis, American Society of Civil Engineers, New York, 1983.
25. ‘‘Guidelines for the Seismic Design of Oil and Gas Pipeline Systems, ’’ prepared by the ASCE Committee on Gas and Liquid Fuel Lifelines, American Society of Civil Engineers, New York, 1984.
26. ‘‘Rules for Submarine Pipelines, ’’ Det Norsk Veritas, Oslo, Norway. 1981.
27. Herbich, J.B. *Offshore Pipeline Design Elements.* Sponsored by Marine Technology Society. Marcel Dekker, Inc., New York, 1981.
28. Gulf Publishing Company, P.O. Box 2608, Houston, TX 77252–2608.
29. PennWell Publishing Company, P.O. Box 21288, Tulsa, OK 74121.

BIBLIOGRAPHY

API-Bul 5C3—Bulletin on Formulas and Calculations for Tubing, Drill Pipe and Line Pipe Properties, American Petroleun Institute, Washington D.C.

API-RP 1102—Recommended Practice for Liquid Petroleum Pipelines Crossing Railroads and Highways, American Petroleum Institute, Washington D.C.

API-RP 1110—Recommended Practice for the Pressure Testing of Liquid Petroleum Pipelines, American Petroleum Institute, Washington, D.C.

API-RP 1111—Recommended Practice for Design, Construction, Operation and Maintenance of Offshore Hydrocarbon Pipelines, American Petroleum Institute, Washington, D.C.

Bell, H.S., ed., *Petroleum Transportation Handbook*, McGraw-Hill, New York, 1963.

CFR 49, Part 195—Transportation of Hazardous Liquids by Pipeline, Codes of Federal Regulation, U.S. Department of Transportation, Washington, D.C.

Fletcher, L., ed., ‘‘Design and Operation of Pipeline Control Systems,’’ Proceedings of a session sponsored by the Pipeline Division of ASCE (San Francisco, Oct. 5, 1984), American Society of Civil Engineers, New York, 1984.

CSA Z662—Oil and Gas Pipeline Systems, Canadian Standards Association.

Hein, M.A., *HP41 Pipeline Hydraulics and Heat-Transfer Programs*, PennWell Publishing Company, Tulsa, Oklahoma, 1984.

Hosmanek, M., *Pipeline Construction*, Petroleum Extension Service, Division of Continuing Education, University of Texas, Austin, 1984.

Kiefner, J.F. and Wall, T.A., ‘‘Calculations Help Control Stresses,’’ *Oil and Gas Journal*, October 14, 1985.

‘‘Lifeline Earthquake Engineering—Buried Pipelines, Seismic Risk and Instrumentation,’’ ASME Third National Congress on Pressure Vessel and Piping, San Francisco, 1979.

Mendel, O., *Practical Piping Handbook*, PennWell Publishing Company, Tulsa, Oklahoma, 1981.

Mousselli, A.H., *Offshore Pipeline Design, Analysis, and Methods*, PennWell Publishing Company, Tulsa, Oklahoma, 1981.

‘‘Pipeline Design for Hydrocarbon Gases and Liquids,’’ Report of the ASCE Committee on Pipeline Planning, American Society of Civil Engineers, New York, 1975.

Pipeline Safety Code, 4th ed., Institute of Petroleum, Model Code of Safe Practice in the Petroleum Industry, Part 6, John Wiley and Sons, London, 1982.

Schurr, B., *Manual of Practical Pipeline Construction*, Gulf Publishing Company, Houston, 1982.

Seiders, E. J., ed., Pipeline Safety and Leak Detection, presented at the Petroleum Division Fall Workshop, Houston, TX, 1988, American Society of Mechanical Engineers.

Whitelaw, J.A. and Reppond, D.W., ‘‘Designs for Buried Pipelines Can Reduce Seismic Hazards,’’ *Oil and Gas Journal*, October 17, 1988.

CHAPTER C6
GAS SYSTEMS PIPING

Peter H.O. Fischer
Pipeline Project Manager
Bechtel Corporation
San Francisco, California

INTRODUCTION

General

Natural gas is the cleanest of all fossil fuels. Plentiful supply, competitive cost, and versatility continue to support an upward trend in the consumption of natural gas on a worldwide scale. In addition to its traditional industrial and residential uses, natural gas has made inroads as a motor fuel for fleet and private vehicles, and as a supply for gas-fired cogeneration power plants and for use in fuel cells.

Increasingly, gas fields are being discovered in the remotest regions of the world. Gas transportation and distribution to and within the industrial and/or populated areas where it is needed is a significant factor in its development as an energy resource. Over long distances, gas can be transported by pipelines or in liquid form in ships. For local distribution, the gas can be delivered through piping distribution networks or in trucks in liquid form.

This chapter addresses the transport and distribution of gas by pipelines and piping systems. Throughout the chapter, reference will be made to Section B31.8 of the American Society of Mechanical Engineers (ASME) Code for Pressure Piping, Gas Transmission and Distribution Piping Systems. This is for convenience only as it is beyond the scope of this endeavor to reference, cross-reference, or compare the many excellent codes and standards that have been developed and that are in use in other countries.

Definitions

Section B31.8 of the ASME Code for Pressure Piping, Gas Transmission and Distribution Piping Systems, defines *gas* as follows:

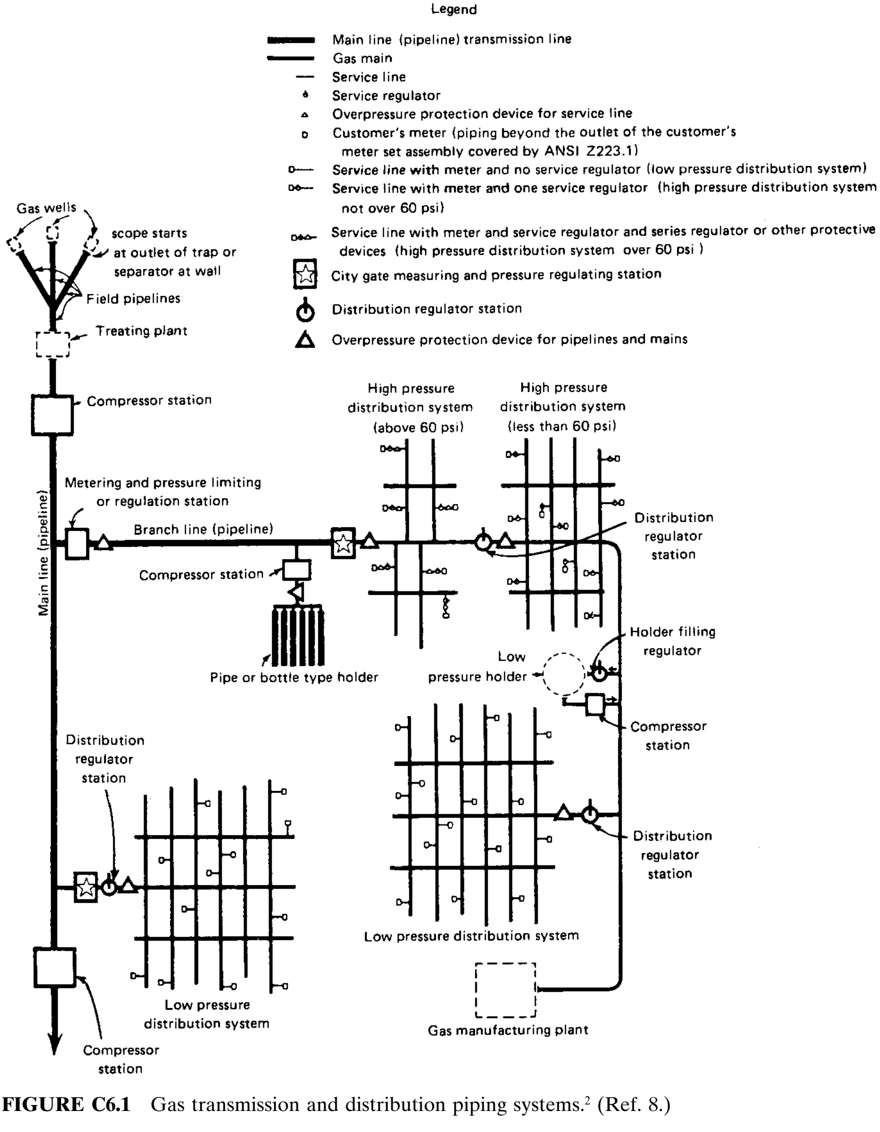
Legend
Main line (pipeline) transmission line
Gas main
Service line
Service regulator
Overpressure protection device for service line
Customer's meter (piping beyond the outlet of the customer's meter set assembly covered by ANSI Z223.1)
Service line with meter and no service regulator (low pressure distribution system)
Service line with meter and one service regulator (high pressure distribution system not over 60 psi)
Service line with meter and service regulator and series regulator or other protective devices (high pressure distribution system over 60 psi)
City gate measuring and pressure regulating station
Distribution regulator station
Overpressure protection device for pipelines and mains
Gas wells
scope starts at outlet of trap or separator at wall
Field pipelines
Treating plant
Compressor station
Main line (pipeline)
Metering and pressure limiting or regulation station
Branch line (pipeline)
Compressor station
Pipe or bottle type holder
High pressure distribution system (above 60 psi)
High pressure distribution system (less than 60 psi)
Distribution regulator station
Holder filling regulator
Low pressure holder
Compressor station
Distribution regulator station
Low pressure distribution system
Gas manufacturing plant
Distribution regulator station
Low pressure distribution system
Compressor station

FIGURE C6.1 Gas transmission and distribution piping systems.^{2} (Ref. 8.)

Gas, as used in this Code, is any gas or mixture of gases suitable for domestic or industrial fuel and transmitted or distributed to the user through a piping system. The common types are natural gas, manufactured gas, and liquefied petroleum gas distributed as a vapor, with or without the admixture of air. (Ref. 8.)

A comprehensive listing of the definitions of general terms used in the gas transmission industry is provided in Secs. 803 through 806 of ASME B31.8.

Types of Systems

Figure C6.1, abstracted from ASME B31.8, gives an overview of the piping and facilities (indicated by solid lines) considered to be part of gas transmission and distribution piping systems.

Gas Gathering System. The gas gathering system consists of field pipelines transporting dry or wet gas from the wellheads to a central treating facility, where initial separation of gas and liquids takes place.

Mainline (Pipeline) Transmission Lines. Main transmission pipelines transport gas from a source or sources of supply to one or more distribution centers or to one or more large-volume customers, or may interconnect sources of supply. Main transmission pipelines are usually characterized by larger-diameter pipe installed over longer distances with intermediate compressor stations.

Gas Distribution System. The gas distribution system is a piping system installed within a community to convey gas to individual service lines or other gas mains.

REFERENCE DOCUMENTS

Codes and Standards

In the United States as well as many other countries the need for a national code for pressure piping became evident in the early stages of the pipeline industry. To meet this need, codes and standards were developed, and reviewed and revised over the years as needed, to meet the requisites of the industry and of government regulatory agencies. The process is ongoing.

In some instances the codes and standards have become law, as is the case with The Pipeline Safety Act in the United States in the form of Title 49 Part 192 and 195 of the Code of Federal Regulations, ‘‘Transportation of Natural and Other Gas by Pipeline’’ and ‘‘Transportation of Liquids by Pipeline.’’

Needless to say, whether enacted into law or not, it is not the intent of codes and standards to provide a set of rigid rules and formulas, which if followed diligently, will always result in the design and construction of a perfect pipeline system. The great number of variables involved, the unknown circumstances that can be encountered, and the random eventualities which may occur preclude such an approach. Codes and standards do, however, provide a framework within which the experienced and competent designer or engineer can develop a safe, reliable, and economic pipeline.

The following is a listing of codes and standards referenced in this chapter:

API 5L	Line Pipe
API 1104	Welding of Pipelines and Related Facilities
API RP 520	Sizing, Selection, and Installation of Pressure-Relieving Devices in Refineries

TABLE C6.1 Gas Pipeline Code Comparison for Various Countries

Country/code	Location	Safety factor	Percent of yield	Design on min. or nom. wall thickness	Allowance for excess pressure	Main line valve frequency	Normal temperature range	Special remarks
U.S.A. ASME B31.8 1995	Class 1 Div 1 Class 1 Div 2 Class 2 Class 3 Class 4	1.25 1.4 1.7 2.0 2.5	80 72 60 50 40	Nominal	Lesser of 10% overpressure or 75% of yield	Class 1 20 miles Class 2 15 miles Class 3 10 miles Class 4 5 miles	−20°F to 450°F (−29°C to 232°C) Derating above 250°F (121°C)	Class 1: Desert or farmland Class 2: Town outskirts Class 3: Residential and commercial Class 4: Town center, high rises
CANADA-CSA Z662	Class 1 Class 2 Class 3 Class 4	1.4 1.7 2.0 2.5	72 60 50 40	Nominal	Lesser of 10% overpressure or 75% of yield	Class 1 Not Required Class 2 25 km Class 3 13 km Class 4 8 km	−100°F to 450°F (−74°C to 232°C) Derating above 250°F (121°C)	Class 1: <10 dwellings for human occupancy Class 2: >10 <46 dwellings Class 3: >46 dwellings Class 4: Buildings 4 or more stories
AUSTRALIA-AS 2885	Class R1 Class R2 Class T1 Class T2	1.4 1.4 1.7 2.0	72 72 60 50	Nominal	10% Overpressure	Class R1 As Required Class R2 30 km Class T1 15 km Class T2 15 km	−22°F to 446°F (−30°C to 230°C) Derating above 248°F (120°C)	Class R1: Undeveloped, sparsely populated Class R2: Small farms, rural residential Class T1: Residential, commercial, industrial areas Class T2: Buildings 4 or more floors Submarine lines S.F. 1.4 except at piers, risers, scraper traps S.F.: 1.7. Station piping and on bridges S.F. 1.7.
ISO/DIS 13623	Class 1 Class 2 Class 3 Class 4 Class 5	1.2 1.3 1.5 1.8 2.25	83 77 67 55 45	Minimum	None	At beginning and end of pipelines, and as needed.		Class 1: Areas of infrequent human activity Class 2: Population density <50 persons/sq km Class 3: Population density ≥50 <250/sq km Class 4: Population density ≥250/sq km Class 5: Buildings 4 or more stories

ANSI/AWWA C151/A21.51	Ductile-Iron Pipe, Centrifugally Cast, for Water
ASME 16.5	Pipe Flanges and Flanged Fittings
ASME B31.8	Gas Transmission and Distribution Piping Systems
ASME	Boiler and Pressure Vessel Code
ASTM D 2513	Thermoplastic Gas Pressure Pipe, Tubing, and Fittings
ASTM D 2517	Reinforced Epoxy Resin Gas Pressure Pipe and Fittings
DOT 49 PT 192/195	Transportation of Natural and Other Gas by Pipeline/Transportation of Liquids by Pipeline
NFPA 30	Flammable and Combustible Liquids Code

Other Reference Documents

Many countries other than the United States have pipeline regulations of their own, and in many cases these are more stringent than the U.S. codes, especially where licensing and leak testing are concerned. These must always be researched before starting design intended for the installation of pipelines in other countries. Countries known to have codes include:

Algeria
Austria
Australia
Belgium
Canada
France
Germany
Great Britain
Japan
Italy
Russia

Table C6.1 provides a synopsis of *some* of these pipeline codes.

DESIGN

The specific identification of types of pipe generally used for high-pressure gas lines is given in the latest edition of the ASME Code for Pressure Piping, ASME B31.8. Special fittings for gas systems, together with typical details and design recommendations, are included in this chapter.

Basic Flow Equations

Rational Gas Flow Formula. Many equations for calculations involving isothermal gas flow in horizontal gas pipelines have been used by the pipeline industry with varying degrees of success over the years. One of the more common is the rational gas flow formula:

$$P_1^2 - P_2^2 = Bf(ZTGQ^2/D^5)L \tag{C6.1}$$

where

		Units	
		Imperial	*Metric*
B =	dimensional constant	76.86	5608
D =	internal diameter	in	mm
f =	friction factor	dimensionless	
L =	length	mi	km
G =	gas gravity	(air = 1)	
P_1 =	initial line pressure	psia	kg/cm^2
P_2 =	final line pressure	psia	kg/cm^2
Q =	flow rate	1000 ft^3/hr (MCF/hr)	m^3/hr
T =	absolute gas temperature	°R (°F+460)	K (°C+273)
Z =	compressibility factor, at average flow conditions	dimensionless	

To take into account differences in elevation, the pressure profile for flow in gas pipelines is determined using the rational gas flow formula modified with J. William Ferguson's elevation correction method as follows:

$$P_1^2 - e^S P_2^2 = Bf\,(ZTGQ^2/D^5)L_e \tag{C6.2}$$

where

		Units	
		Imperial	*Metric*
B =	dimensional constant	76.86	5608
P_1 =	initial line pressure	psia	kg/cm^2
P_2 =	final line pressure	psia	kg/cm^2
e =	natural logarithmic	base, 2.71828	
f =	friction factor	dimensionless	
G =	gas gravity	(air = 1)	

$T =$	absolute gas temperature	°R	K
$Q =$	flow rate	1000 ft^3/hr (MCF/hr)	m^3/hr
$Z =$	compressibility factor, at average flow conditions	dimensionless	
$L =$	length of pipe segment	mi	km
$H =$	elevation difference over the segment (positive uphill, negative downhill)	ft	m
$A =$	dimensional constant	26.647	14.637
$s =$	GH/(ATZ)	dimensionless	
$L_e =$	effective length $(e^s - 1)$ L/s	mi	km
$D =$	pipe internal diameter	in	mm
$e^s =$	elevation correction factor	dimensionless	

Pipe Design Formula. The design pressure for steel gas piping systems or the nominal wall thickness for a given design pressure is determined by the following formula:

$$P = 2StFET/D \tag{C6.3}$$

where

		Units	
		Imperial	*Metric*
$P =$	permissible design pressure	psig	kg/cm^2
$S =$	yield strength	psig	kg/cm^2
$D =$	nominal outside pipe diameter	in	mm
$t =$	nominal pipe wall thickness	in	mm
$F =$	design factor. Value depends on location class. (See Table C6.2). Exceptions are given in Table C6.3.	dimensionless	
$E =$	longitudinal pipe joint factor. This is a function of the type of pipe manufacture. (See Table C6.4).	dimensionless	

$T =$	temperature derating factor. (See Table C6.5)	dimensionless

Location Classes for Design. The possibility of damage to a gas pipeline increases with greater concentrations of people and buildings. One method of providing added protection is to lower the pipe stress level as a function of public activity.

TABLE C6.2 Basic Design Factor F (Ref. 8)

Location class	Design factor F
Location Class 1, Division 1	0.80
Location Class 1, Division 2	0.72
Location Class 2	0.60
Location Class 3	0.50
Location Class 4	0.40

ASME B31.8 quantifies this activity by determining location class and relating the design of the pipeline to the appropriate design factor.

ASME B31.8 has defined *location classes* as follows:

> *Location Class 1.* A Location Class 1 is any 1 mile section that has 10 or fewer buildings intended for human occupancy. A Location Class 1 is intended to reflect areas such as wasteland, deserts, mountains, grazing land, farmland, and sparsely populated areas.
>
>> *Division 1.* A Class 1 location where the design factor of the pipe is greater than 0.72, but equal to or less than 0.80, and which has been hydrostatically tested to 1.25 times the maximum operating pressure.
>>
>> *Division 2.* A Class 1 location where the design factor of the pipe is equal to or less than 0.72, and which has been tested to 1.1 times the maximum operating pressure.
>
> *Location Class 2.* A Location Class 2 is any 1 mile section that has more than 10 but fewer than 46 buildings intended for human occupancy. A Location Class 2 is intended to reflect areas where the degree of population is intermediate between Location Class 1 and Location Class 3 such as fringe areas around cities and towns, industrial areas, ranch or country estates, etc.
>
> *Location Class 3.* A Location Class 3 is any 1 mile section that has 46 or more buildings intended for human occupancy except when a Location Class 4 prevails. A Location Class 3 is intended to reflect areas such as suburban housing developments, shopping centers, residential areas, industrial areas, and other populated areas not meeting Location Class 4 requirements.
>
> *Location Class 4.* Location Class 4 includes areas where multistory buildings are prevalent, and where traffic is heavy or dense and where there may be numerous other utilities underground. Multistory means 4 or more floors above ground including the first or ground floor.

The design factor for pipelines or mains supported by railroad, vehicular, pedestrian, or pipeline bridges must be determined in accordance with the location class

TABLE C6.3 Design Factors for Steel Pipe Construction (Ref. 8)

	Location class				
	1		2	3	4
Facility	Div. 1	Div. 2			
Pipelines, mains, and service lines	0.80	0.72	0.60	0.50	0.40
Crossings of roads, railroads without casing:					
(a) Private roads	0.80	0.72	0.60	0.50	0.40
(b) Unimproved public roads	0.60	0.60	0.60	0.50	0.40
(c) Roads, highways, or public streets, with hard surface and railroads	0.60	0.60	0.50	0.50	0.40
Crossings of roads, railroads with casing:					
(a) Private roads	0.80	0.72	0.60	0.50	0.40
(b) Unimproved public roads	0.72	0.72	0.60	0.50	0.40
(c) Roads, highways, or public streets, with hard surface and railroads	0.70	0.72	0.60	0.50	0.40
Parallel encroachment of pipelines and mains on roads and railroads:					
(a) Private roads	0.80	0.72	0.60	0.50	0.40
(b) Unimproved public roads	0.80	0.72	0.60	0.50	0.40
(c) Roads, highways, or public streets, with hard surface and railroads	0.60	0.60	0.60	0.50	0.40
Fabricated assemblies	0.60	0.60	0.60	0.50	0.40
Pipelines on bridges	0.60	0.60	0.60	0.50	0.40
Compressor station piping	0.50	0.50	0.50	0.50	0.40
Near concentration of people in Location Classes 1 and 2	0.50	0.50	0.50	0.50	0.40

TABLE C6.4 Longitudinal Joint Factor E (Ref. 8)

Spec. No.	Pipe class	E factor	Spec No.	Pipe class	E factor
ASTM A 53	Seamless	1.00	ASTM A 671	Electrical fusion welded	
	Electrical resistance welded	1.00		Classes 13, 23, 33, 43, 53	0.80
	Furnace butt welded—Continuous weld	0.60		Classes 12, 22, 32, 42, 52	1.00
ASTM A 106	Seamless	1.00	ASTM A 672	Electric fusion welded	
ASTM A 134	Electric fusion arc welded	0.80		Classes 13, 23, 33, 43, 53	0.80
ASTM A 135	Electric resistance welded	1.00		Classes 12, 22, 32, 42, 52	1.00
ASTM A 139	Electric fusion welded	0.80			
ASTM A 211	Spiral welded steel pipe	0.80	API 5L	Seamless	1.00
ASTM A 333	Seamless	1.00		Electric resistance welded	1.00
	Electric resistance welded	1.00		Electric flash welded	1.00
ASTM A 381	Double submerged-Arc-welded	1.00		Furnace butt welded	0.60
				Submerged arc welded	1.00

General note:
Definitions for the various classes of welded pipe are given in ASME B31.8.

TABLE C6.5 Temperature Derating Factor T for Steel Pipe (Ref. 2)

Temperature		Temperature derating factor T
°F	°C	
250 or less	121 or less	1.000
300	149	0.967
350	177	0.033
400	204	0.900
450	232	0.867

General note:
For intermediate temperatures, interpolate for derating factor.

prescribed for the area in which the bridge is located, except that in Location Class 1, a design factor of 0.6 must be used.

Flowing Temperature. The original equation developed to predict with reasonable accuracy the temperature of gas at any point along a transmission line was derived by Charles E. Schorre and presented in 1954 (Schorre, C.E., ‘‘Flow Temperature in a Gas Pipeline,’’ *OGJ*, Sept. 27, 1954).

However, with Schorre’s equation, flowing gas temperatures continuously decrease with downstream distance, never reaching an equilibrium value as would be expected when the Joule-Thompson cooling effect is offset by heat gain from warmer surrounding soil.

In 1979, D.M. Coulter and M.F. Bardon developed the following equation which gives a logarithmically decreasing flowing gas temperature which asymptotically approaches a value below that of the ground temperature. Using the same nomenclature as Schorre (and P = pressure):

$$T_2 = (T_1 - (T_g + (\mu/a)(dP/dX)))\, e^{(-aX)} + (T_g + (\mu/a)(dP/dX)) \qquad (C6.4)$$

where

		Units	
		Imperial	*Metric*
$\mu =$	Joule-Thompson coefficient	°F/psi	$°C/kg/cm^2$
$\mu(dP/dX) = J =$	Joule-Thompson effect	°F/ft of pipe	°C/m of pipe
$X_1 =$	distance to T_1 from initial point	ft	m
$X_2 =$	distance to T_2 from initial point	ft	m
$X =$	$X_2 - X_1$	ft	m
$J/a =$	temperature difference between the ground and gas which would be necessary to hold the gas temperature constant	°F	°C

T_1 =	initial gas temperature at point X_1	°F	°C
T_2 =	gas temperature at point X_2	°F	°C
T_g =	average ground temperature	°F	°C

$$a = 2\pi RU/(qC_p) \tag{C6.5}$$

where

		Units	
		Imperial	*Metric*
π =	Pi	3.1416	3.1416
R =	pipe radius	ft	m
U =	heat-transfer coefficient	Btu/hour/ °F/sq.ft.	Joules/hour/ °C/cm^2
q =	gas flowing	1000 ft^3/hr (MCF/hr)	m^3/hr
C_p =	specific heat of gas at constant pressure	Btu/°F/ MCF	Joules/°C/ m^3

(Coulter, D.M., Bardon, M.F.,[5] "Revised equation improves flowing gas temperature prediction," *OGJ*, Feb. 26, 1979)

Transmission Factor. The transmission factor, $(1/f)^{0.5}$, is one of the most difficult values to determine. The following equations have proven to be reasonably reliable for use with the rational gas flow formula.

For laminar flow:

$$(1/f)^{0.5} = 0.5(4\log_{10}(f^{0.5}R_e) - 0.6) \tag{C6.6}$$

For fully turbulent flow:

$$(1/f)^{0.5} = 0.5(4\log_{10}(3.7D/k_e)) \tag{C6.7}$$

For fully turbulent flow using Colebrook's[9] equation:

$$(1/f)^{0.5} = 1.74 - 2\,\mathrm{Log}_{10}(2\varepsilon/D + 18.7/(R_e f^{0.5})) \tag{C6.8}$$

The Colebrook equation requires an iterative procedure to solve for *f*.

where

		Units	
		Imperial	*Metric*
f =	friction coefficient	dimensionless	
D =	inside diameter of pipe	in	mm
ke	effective roughness	in	mm

ε =	absolute roughness	in	mm
R_e =	Reynolds number	dimensionless	

The Reynolds number for flowing gas is determined by the following:

$$R_e = C Q_b\, G P_b/(\mu D\, T_b) \qquad \text{(C6.9)}$$

where

		Units	
		Imperial	*Metric*
C =	Dimensional constant	0.7099	12.3039
Q_b =	flow rate at P_b, T_b	ft^3/day	m^3/hr
G =	gas specific gravity	(Air = 1.0)	
P_b =	base pressure	psia	kg/cm^2
μ =	viscosity	centipoise	kgf s/m^2
D =	internal diameter	in	mm
T_b =	base temperature	°R	K

Compressibility Factor. The compressibility factor, Z, may be obtained from the standard gas compressibility factor chart, Fig. C6.2.

$$\text{Pseudo-reduced temperature,} \qquad T_r = T/T_c \qquad \text{(C6.10)}$$

$$\text{Pseudo-reduced pressure,} \qquad P_r = P/P_c \qquad \text{(C6.11)}$$

where

		Units	
		Imperial	*Metric*
T_c =	absolute pseudo-critical temperature	°R	K
P_c =	absolute pseudo-critical pressure	psia	kg/cm^2
P =	absolute pressure at which the gas exists	psia	kg/cm^2
T =	absolute temperature at which the gas exists	°R	K

Figure C6.3 provides convenient approximations for determining the pseudo-critical pressure and pseudo-critical temperature of gases when only the specific gravity of the gas is known. Otherwise, these values should be calculated based on actual gas composition.

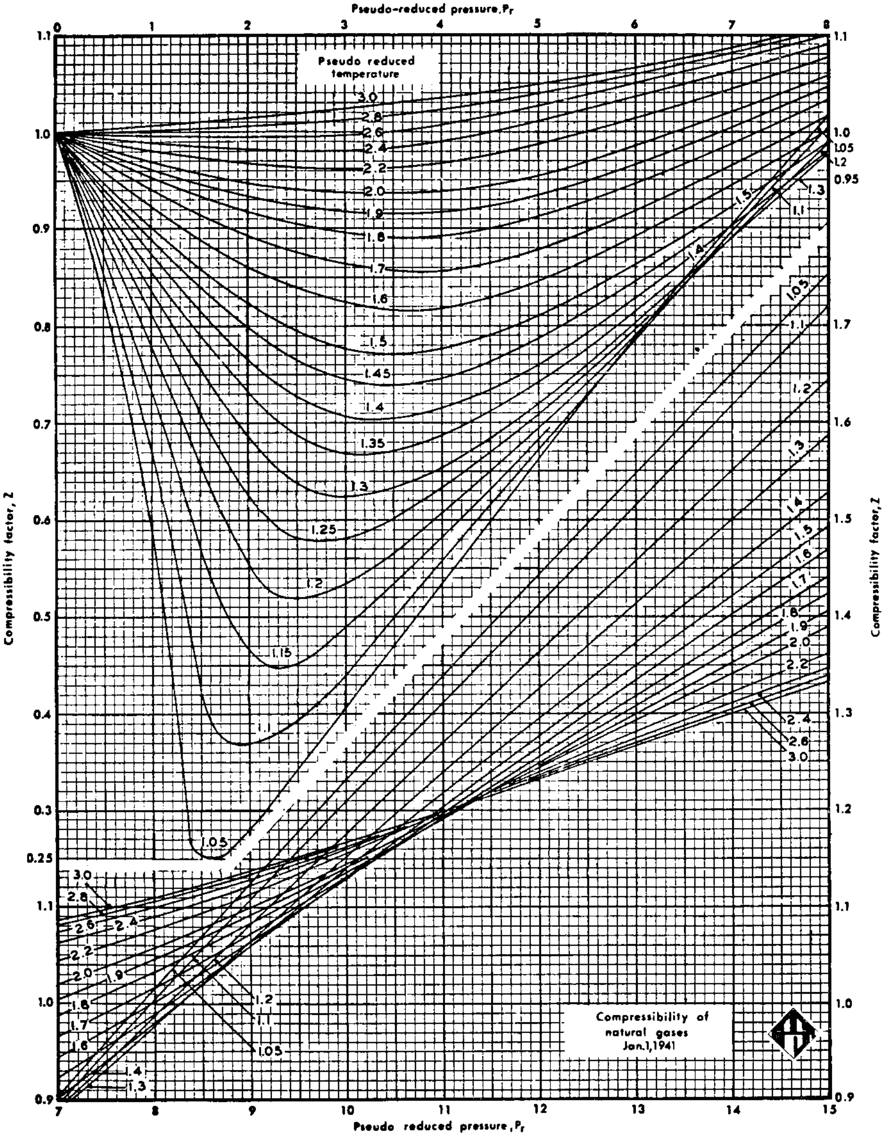

FIGURE C6.2 Compressibility factors for natural gas. *(Gas Processor Suppliers Association Engineering Data Book.)*

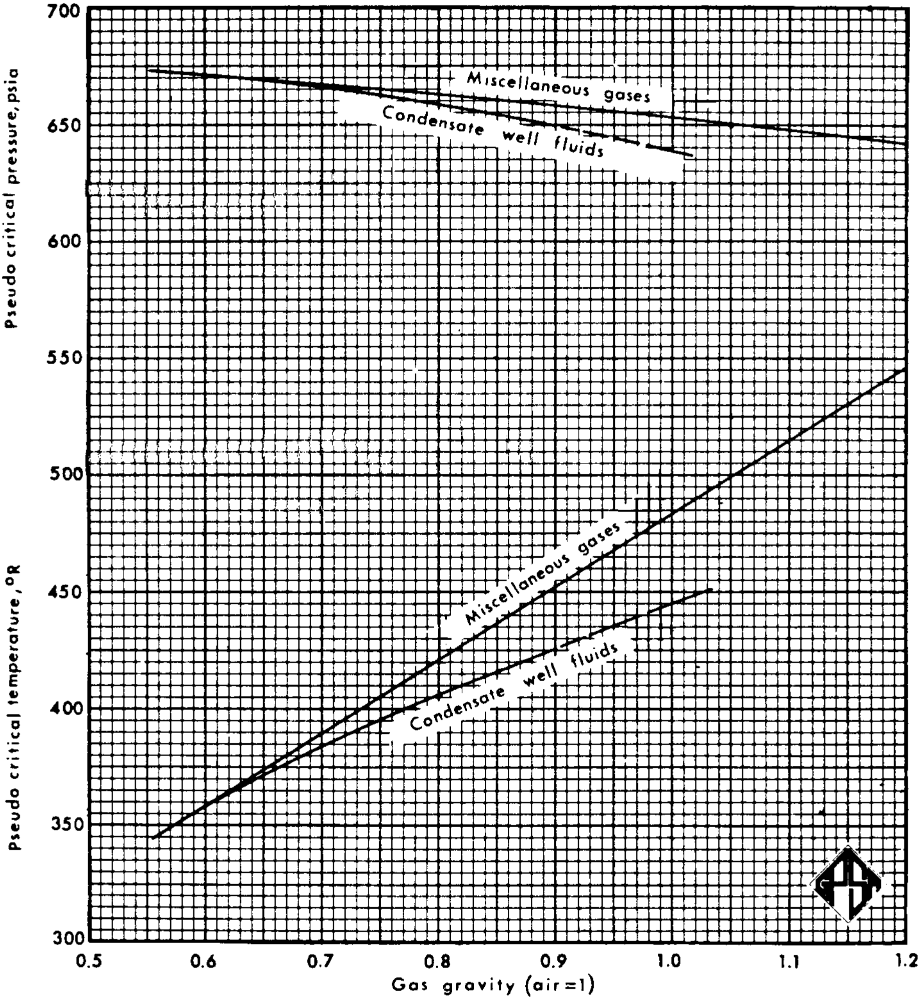

FIGURE C6.3 Pseudocritical properties of natural gases. *(Gas Processors Suppliers Association Engineering Data Book.)*

Gas Gathering Systems

Condensate Formation. Liquids are created in gas pipelines when the temperature of the gas flowing through the pipeline drops below the dewpoint of the gas. As the gas has both a hydrocarbon dewpoint and a water dewpoint, both hydrocarbons and water may condense and accumulate at low points in the pipeline to obstruct the flow of gas. In addition to the reduction in the capacity of the pipeline, the arrival of large volumes of liquid at downstream gas treatment facilities can result in severe damage to equipment or, at the least, cause erratic plant operation.

Two-Phase Flow. Accurate determination of pressures along the route of a wet gas pipeline operating in two-phase flow is difficult because the flow regimes associated with two-phase flow are numerous, complex, and difficult to define. Consideration must be given to gas and liquid fluid properties, flow regimes, pressure drop, and liquid holdup.

The major complication with two-phase flow is the variety of flow patterns that can be produced in a gas-liquid system. The type of flow pattern encountered depends upon the flow rates and properties (density and viscosity) of each of the gas and liquid components, surface tension between the two phases, pipe size, and pipe configuration, and terrain. These factors have rendered the derivation of general flow correlations difficult.

New correlations for pressure loss and liquid holdup in gas/liquid pipelines are continuously being developed and are showing consistently reliable predictions for both holdup and pressure loss when compared to actual field operating data.

The very number, complexity, and application specific limitations of many of these correlations precludes the presentation and discussion of any particular correlation in this chapter. The reader is referred to current literature to obtain the latest information and formulas, and to proprietary computer software available on the market.

Hydrate Considerations. Under unfavorable conditions, the low molecular weight hydrocarbons such as methane, propane, or butane form insoluble hydrate deposits in conjunction with water molecules. These hydrate crystals, which resemble ice or wet snow, have been known to virtually plug and stop gas transmission lines.

Hydrates may also occur in equipment as a result of cooling due to pressure reduction. This can be a problem particularly in pressure-control valves and pressure regulators, which can literally freeze up.

The methods for determining the hydrate temperature/pressure are covered in detail in Sec. 15 of the Gas Processors Suppliers Association (GPSA) Engineering Data Book.

Hydrate formation can be prevented by maintaining the gas at a higher temperature, by dehydrating the gas, or by the injection of glycol or methanol. Where hydrate problems occur at pressure-control valves or other equipment, localized heating of the equipment may provide an efficient solution.

Gas Transmission Systems

Route Selection. The most logical pipeline route is a straight line between the point of supply and the point of delivery. However, in practice this tends to be the exception and not the rule. Physical terrain, soil conditions, built-up areas, population densities, and both natural and man-made obstacles together with the requirements of codes and standards will force deviations from a straight line route.

Normally, the best route from a number of alternates will be that which results in the lowest overall project cost for the life of the project, considering material and equipment, construction, and operation and maintenance costs.

In evaluating possible pipeline routes, consideration must be given to the following:

> *Location of Facilities.* Although the locations of supply and delivery points are usually fixed, the siting of these facilities should take into account the availability of suitable pipeline routes whenever possible.

On long transmission lines, the availability of suitable sites for intermediate compressor stations will also have an impact on the selection of the final route.

And finally, the location of possible future supply and delivery connections to the mainline may play a role in the alignment of the mainline.

Environment. Impact on the environment of pipeline construction, maintenance, and operation must be considered and mitigated, or avoided altogether by rerouting. Special attention must be given to the habitats of endangered species of plant and animal life. In many instances severe restrictions will be imposed on the construction of the pipeline and related facilities.

Cultural and Historical Heritage. Sensitivity to the significance of local cultural and historical areas to the local peoples must be exercised in developing the pipeline route. Gaining the trust and respect of the people who will be affected by the installation and operation of the pipeline will reap substantial benefits for construction and future operation.

Terrain. The terrain which a pipeline traverses has a significant impact on construction costs and in some cases maintenance costs. For instance, the amount of rock along the pipeline route has a major impact on the cost of installation, but little or none on operating or maintenance costs. However, areas of soil erosion, landslide areas, swamps, and river crossings increase both the cost of installation and the cost of maintenance. Such areas usually require special construction methods and in many cases require stabilization measures after installation which become a continuing maintenance item.

Man-Made Infrastructure. The pipeline route must normally also cross roads, highways, railroads, canals, and irrigation structures. Such crossings increase the installation costs as additional depth of burial, and in some instances, the installation of casing is required. The costs of crossing such obstacles must be weighed against the costs of alternate routes, if available.

Populated Areas. The pipeline route should avoid populated areas to reduce the exposure of the population to hazards associated with the pipeline. Also, by avoiding populated areas, the possibility of damage to or interference with the pipeline is reduced.

There is also an economic penalty in crossing populated areas. Most codes will require the use of a lower pipe design factor, resulting in the installation of heavier-wall pipe. More expensive construction methods may also be required and ready access to the pipeline for operation and maintenance may be reduced.

The area defined by Section 840 of ASME B31.8 in which the design of the pipeline is affected by the density of the population extends 200 meters (⅛ mile) on either side of the pipeline. As future increases in population density can force the upgrading of an existing pipeline, the rate of development and probable direction of future population growth must be considered in selecting the pipeline route.

Diameter Selection/Station Spacing. Investment in pipe invariably represents the largest single expenditure for a transmission line. It is therefore imperative to find the size of pipe that will most cost-effectively handle the required gas volumes. To do so, horsepower and compressor station spacing must be considered. While pipe tonnage represents a high first cost in investment compared to the installation of horsepower, the operating charges for pipe are relatively negligible, while fuel and maintenance costs of compressor facilities are high. The savings realized by decreasing pipe tonnage can eventually be offset by the costs associated with the increased horsepower required.

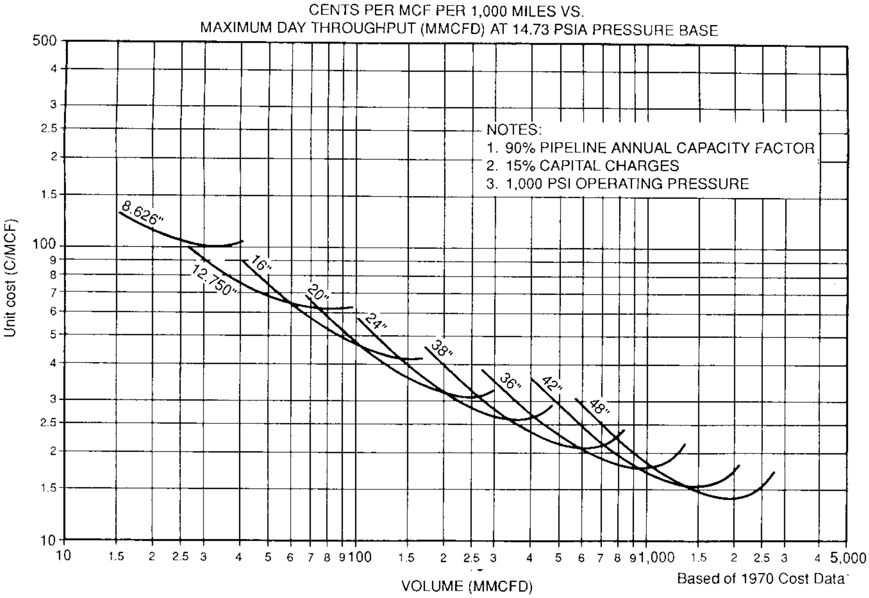

FIGURE C6.4 Effect of pipeline diameter on gas transmission costs.

An estimate of the pipe size required can be made from charts similar to Fig. C6.4, which plot gas transmission costs against throughput volume for varying pipe diameters. With the approximate pipe size(s) determined, a preliminary economic analysis can be performed using computer programs developed for economic studies of gas pipeline systems. These programs allow for the rapid comparison of a number of alternatives, allowing the selection of the one apparently offering most economic advantages.

With an optimum pipe size determined, a more precise design of the selected system can be undertaken.

Mainline Valves. Mainline valves are installed in gas transmission lines for both safety and economic reasons. The basic concern is the loss of gas and the associated hazards in the event of a break in the pipe. Factors which must be considered in determining the spacing of mainline valves include:

- The availability of continuous access to the valves
- The conservation of gas
- The time required to blow down any given section of pipe in case of emergency or maintenance
- Continuity of gas service
- Operating flexibility
- Future development within the pipe section
- Any significant natural conditions which could adversely affect the operation and security of the pipeline

The maximum spacing between valves is specified in Sec. 846 of ASME B31.8 and varies with the population density along the pipeline. Spacing on new transmission lines may not exceed the following:

Location	*Spacing*
Class 1	20 miles (32 km)
Class 2	15 mile (24 km)
Class 3	10 miles (16 km)
Class 4	5 miles (8 km)

The mainline valves should be of the full-opening, through-conduit type to allow for the passage of scrapers and inspection pigs. Either ball or gate valves are suitable, preferably weld-end (avoids flange leaks) with shop-welded transition pieces. Valves for underground service should have stem extensions to elevate the valve operators above grade and should also have lubricant and bleed lines extended for ease of access.

Blowdown Assemblies. Blowdown assemblies allow for the evacuation of gas from sections of pipeline under emergency conditions or for scheduled maintenance operations. A typical mainline valve and blowdown assembly is shown in Fig. C6.5.

The primary consideration in sizing the piping for the assembly is the time required to blow down the section between two mainline valves.

The following formula, found in the American Gas Association Manual, provides a means of determining venting time and blowdown valve size:

$$T_m = B P_1^{1/3} G^{1/2} D^2 L F_c / d^2 \qquad \text{(C6.12)}$$

where

		Units	
		Imperial	*Metric*
$T_m =$	blowdown time	min	min
$B =$	dimensional constant	0.0588	0.0886
$P_1 =$	initial line pressure, abs	psia	kg/cm^2
$G =$	specific gravity	(Air = 1.0)	
$D =$	inside diameter of pipe	in	mm
$L =$	length of pipeline section	mi	km
$d =$	inside diameter of blowdown	in	mm
$F_c =$	choke factor: ideal nozzle = 1.0 through gate = 1.6 regular gate = 1.8 regular lube plug = 2.0 venturi lube plug = 3.2		

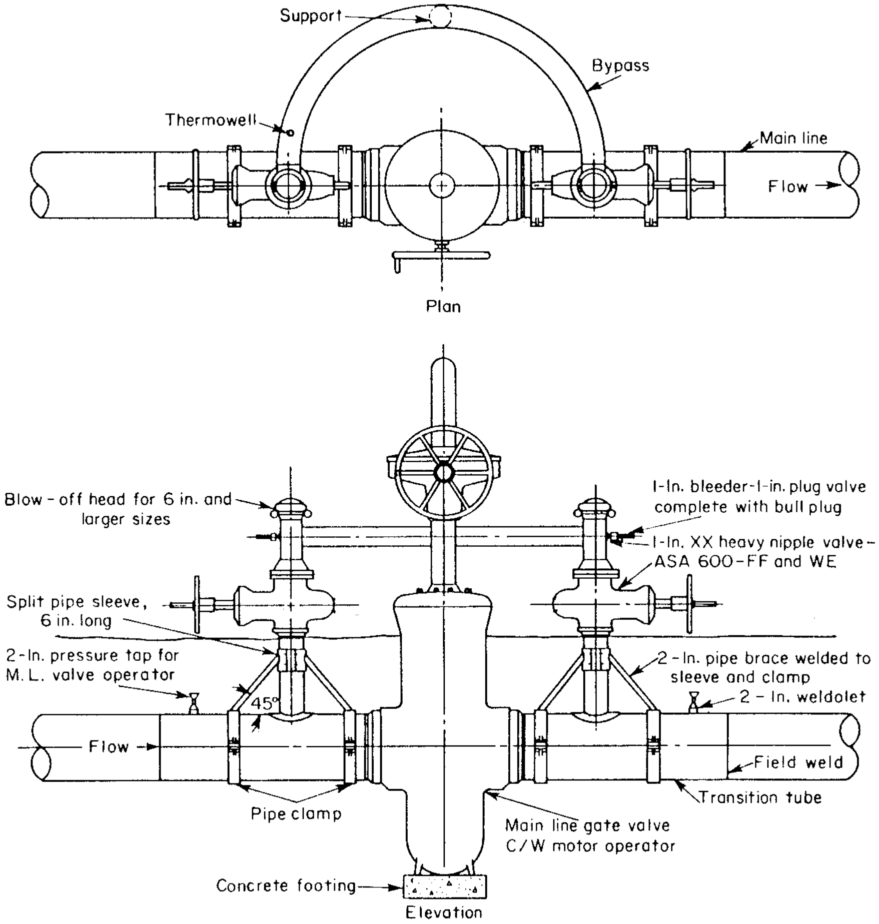
Support
Bypass
Thermowell
Main line
Flow
Plan
Blow-off head for 6 in. and larger sizes
1-in. bleeder-1-in. plug valve complete with bull plug
1-In. XX heavy nipple valve–ASA 600-FF and WE
Split pipe sleeve, 6 in. long
2-In. pressure tap for M.L. valve operator
2-In. pipe brace welded to sleeve and clamp
2-In. weldolet
45°
Flow
Field weld
Transition tube
Pipe clamp
Main line gate valve C/W motor operator
Concrete footing
Elevation

FIGURE C6.5 Mainline gate valve equipped with bypass and blowoff arrangement. *(Piping Handbook, fifth edition.)*

Supports for the blowdown assembly must be designed to not only carry the weight of valves and piping but also the thrust loads which will occur during venting.

Gas Distribution Systems

Although the service pipe that connects the street main to the customer's meter is usually installed by the gas supplying company, the actual ownership (and hence, responsibility) of the pipe varies. In some areas, the gas company owns the pipe all the way to the meter set assembly, but in others the customer owns the pipe from the property line.

Sizing of services may be facilitated by reference to published tables and charts,

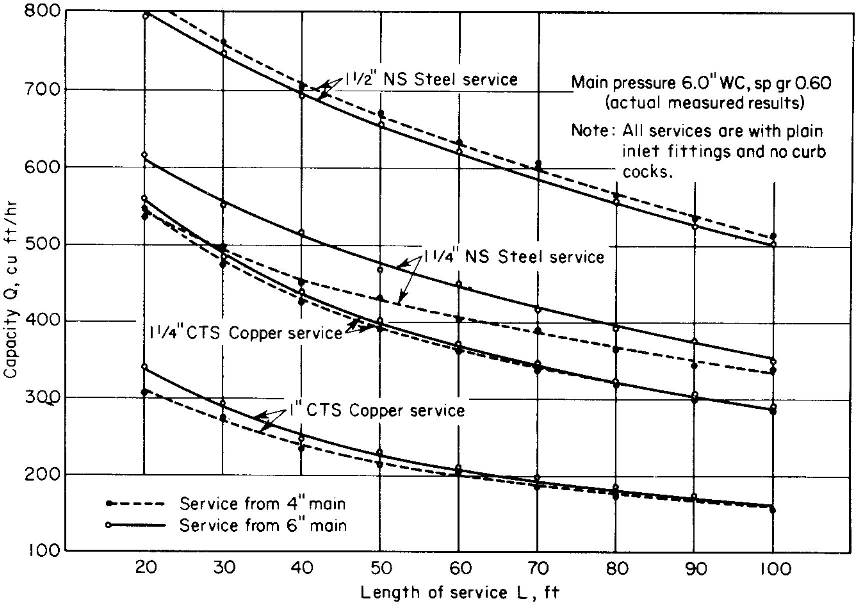

FIGURE C6.6 Total gas flow through LP services, 0.5 in (12.7 mm) water column total drop.

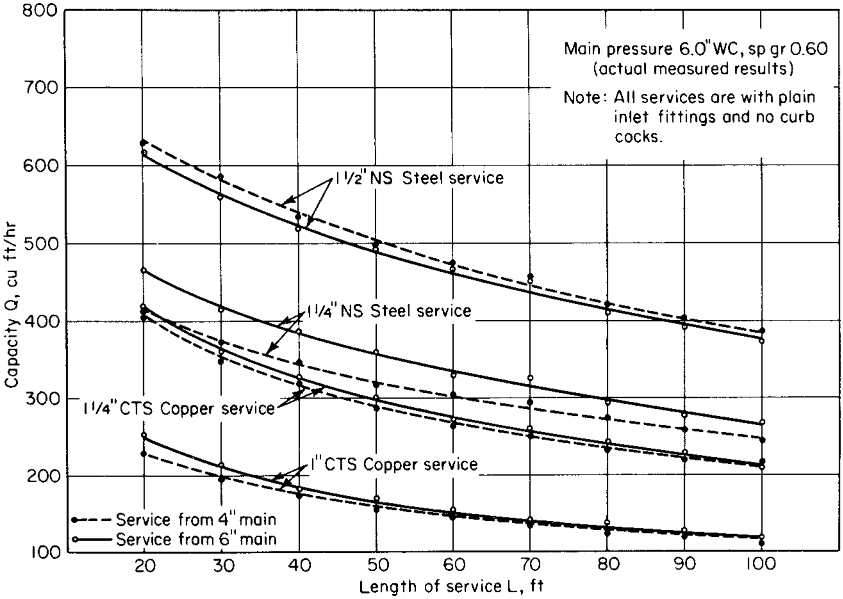

FIGURE C6.7 Total gas flow through LP services, 0.3 in (7.6 mm) water column total drop.

or now, more than likely through the use of either proprietary gas company or marketed computer software. Regardless of the tools used, the following discussion still provides an overview of the thought processes involved, and the charts and tables allow for a simplified means of determining pressure drop and flow rate.

Many different bases are available and used in selecting the proper size. Some use a maximum pressure drop; some use a maximum size for all services; others make a detailed pressure drop calculation for each installation. A brief description of the methods followed by a majority of the companies will be of interest. Consideration of connected load, length of service, and main pressure are made in selecting service pipe size. Generally this combination of variables is handled by means of selecting an allowable pressure drop for a particular main pressure and then selecting the pipe size based upon length of service and anticipated load, which will result in a calculated pressure drop of less than the allowable. Since it is usually the easiest to determine the connected load on a gas service, this flow is used to size the service pipe. Some companies refine the principle by introducing a diversity factor based upon the assumption that all of the appliances will not be in use at the same time. Others assume that the service will ultimately supply a piece of gas space heating equipment and size the service for this load even if no house heating load is installed at present.

The pressure drop allowed on a gas service is primarily a function of the pressure being carried on the mains during the time the mains are supplying the peak demand. In a low-pressure system which operates at a nominal main pressure of from 6 to 8 in (152.4 to 203.2 mm) of water column, most of the companies consider the maximum allowable pressure drop on a gas service to be either 0.3 or 0.5 in (7.6 or 12.7 mm) of water column (see Figs. C6.6 and C6.7). An intermediate-pressure system operating at a main pressure of from 1 to 15 psig (0.07 to 1.05 kg/cm^2) will generally permit an allowable pressure drop of about 0.5 psig (0.035 kg/cm^2). High-pressure distribution systems permit allowable pressure drops of 0.5 to 3 psig (0.035 to 0.21 kg/cm^2). Another method of selecting the allowable pressure drop is to specify that it be some percentage of the main pressure during the maximum hour. One company selects a 20 percent drop, and another a 10 percent drop. Still another method is to specify a value of 10 for the difference in squares of the absolute inlet and outlet pressures.

Flow Characteristics of Low-Pressure Services. Experiments in 1960 showed that the widely used Spitzglass equation for low-pressure gas flow required new resistance values. This flow is a function of inside diameter rather than surface smoothness. Thus, tubing of smaller diameter does not have a capacity equal to that of a larger steel pipe through which it may be drawn for replacement purposes.

The flow equation for either copper or steel services from ¾ in copper tubing size (CTS) copper to NPS 1½ (DN 40) steel pipe was found to follow the form:

$$Q = C\left[\frac{\text{total pressure drop in service, } P}{(K_p)(S/S')(L + L_{ef})}\right]^{0.54} \qquad \text{(C6.13)}$$

			Units	
			Imperial	*Metric*
where	$Q =$	flow	ft^3/h	m^3/h

$C =$	dimensional constant	1	0.009012
$P =$	total pressure drop in service	in H_2O	cm H_2O
$K_p =$	pipe constant, Table C6.6	dimensionless	
$S =$	sp gr of gas	dimensionless	
$S' =$	sp gr 0.60	dimensionless	
$L =$	length of service	ft	m
$L_{ef} =$	equivalent length of fittings, Table C6.7	ft	m

TABLE C6.6 Values of K_p

CTS ¾ (DN 20) copper	1.622×10^{-6}
NPS 1 (DN 25) plastic	0.279×10^{-6}
CTS 1 (DN 25) copper	0.383×10^{-6}
CTS 1¼ (DN 32) copper	0.124×10^{-6}
NPS 1¼ (DN 32) steel	0.080×10^{-6}
NPS 1½ (DN 40) steel	0.037×10^{-6}

TABLE C6.7 Equivalent Length of Fittings

	Feet	Meters
CTS 1 (DN 25) or CTS 1¼ (DN 32) curb cock for copper service	3.5	1.07
NPS 1¼ (DN 32) curb cock for steel service	13.5	4.11
1½-in (DN 40) curb cock for 1½-in (DN 40) steel service	12.0	3.66
NPS 1¼ (DN 32) street elbow for steel service	7.5	2.29
NPS 1½ (DN 40) street elbow for steel service	7.5	2.29
NPS 1¼ (DN 32) street tee for steel service	10.5	3.20
NPS 1½ (DN 40) street tee on sleeve or NPS 1¼ (DN 32) hole in main	15.0	4.57
NPS 1¼ × 1 × 1¼ (DN 32 × 25 × 32) street tee	23.0	7.01
NPS 1½ × 1¼ × 1½ (DN 40 × 32 × 40) street tee	19.0	5.79
Combined outlet fittings:		
CTS ¾ (DN 20) copper	2.0	0.61
CTS 1 (DN 25) copper or plastic	6.0	1.83
NPS 1¼ (DN 32) steel	8.0	2.44
NPS 1½ (DN 40) steel	22.0	6.71

PIPE AND FITTINGS

Primary Materials

Most pipe for transmission pipelines worldwide is made to American Petroleum Institute (API) Specification 5L, Specification for Line Pipe, and virtually all the major pipe mills in the world qualify for the API stamp. The API specification covers:

- Pipe made from mild steel, Grades A and B (specified minimum yield strengths up to 35,000 psi)
- Pipe made from high-strength steels (i.e., X42, X46, X52 etc., the number following the "X" being the specified minimum yield strength expressed in thousands of psi)
- Pipe made by welding coiled skelp into a helix (spiral) and welding the abutted edges

Refer to App. E5 and App. E6.

Line pipe comes in a variety of sizes from NPS 3 to NPS 60 (DN 80 to DN 1500) in outside diameter. Special production runs of pipe up to NPS 100 (DN 2500) in diameter have been made. Wall thickness is usually specified in 1⁄32 in (0.8 mm) in intervals, from 3⁄16 in in small pipe sizes to 1¼ in (31.75 mm) in the larger diameters. American engineers use the decimal equivalent of 1⁄32 in to express wall thickness (.219 for 7⁄32 in, .250 for ¼ in, etc.). Engineers in metric countries express the same wall thickness in millimeters (.219 in = 5.56 mm, .250 in = 6.35 mm, etc.). Pipe sizes in the metric system tend to be expressed in multiples of 25 mm nominal (NPS 14 = DN 350, NPS 24 = DN 600, etc.). Refer to Chap. A1.

Pipe flanges and flanged fittings are manufactured according to the American Society of Mechanical Engineers Standard, ASME B16.5, Steel Pipe Flanges and Flanged Fittings, which establishes pressure ratings for eight classes of flanges and fittings. ASME B16.5 details the standard physical dimensions, number and size of bolt holes, etc. for each size fitting. The exact pressure rating of each class of fitting varies with type of steel and the design temperature.

Other Materials

Other materials which have been used in gas service include ductile-iron, plastic, and copper. Cast-iron, because of its brittleness, is quickly being replaced by plastic pipe. These are generally limited to use in mains and service lines in distribution systems. A brief summary of the limitations and restrictions on their use is given below.

Ductile-Iron. Ductile-iron pipe must be manufactured in accordance with ANSI A21.51/AWWA C151 Ductile Iron Pipe, Centrifugally Cast, in Metal Molds or Sand Lined Molds for Gas.

Plastic. Plastic pipe and components must be manufactured in accordance with the following American Society for Testing and Materials (ASTM) standards:

ASTM D 2513	Thermoplastic Gas Pressure Pipe, Tubing, and Fittings
ASTM D 2517	Reinforced Epoxy Resin Gas Pressure Pipe and Fittings

Copper. Copper tubing or pipe for use in gas mains is limited to pressures of 100 psi (7 kg/cm^2) or less, must have a minimum wall thickness of 0.065 in (1.65 mm), and must be hard-drawn.

Where the gas being transported contains more than an average of 0.3 grains of hydrogen sulfide per 100 standard cubic feet (2.83 standard cubic meters) of gas, copper may not be used.

COMPRESSOR STATIONS

Types and Function

The compressor station is the equivalent of the pump station on a liquid transportation pipeline system. Whenever a gas has insufficient energy for transport, a compressor station is installed. The types of compressor stations that are in general use can be categorized as follows:

Field or Gathering Stations. These stations gather gas from wells in which pressure is not sufficient to produce a desired flow rate into transmission or distribution systems. Such stations may handle suction pressures from below atmospheric pressure up to 750 psig (53 kg/cm^2), and volumes from a few thousand to many million standard cubic feet (30 to 30,000 m^3) per day.

Repressurizing or Recycling Stations. This type of station is an integral part of a processing or secondary recovery facility, which may or may not involve transportation of natural gas to a consumer. All or a percentage of the gas is reinjected into the reservoir for reservoir maintenance, or for storage for future use. Discharge pressures can exceed 6000 psig (420 kg/cm^2).

Storage Field Stations. These stations compress trunk line gas for injection into designated storage wells. Discharge pressures may range up to 4000 psig (280 kg/cm^2) with compression ratios as high as 1 to 4. Some storage stations are designed to also permit the withdrawal of gas from storage as well, and to inject the gas into high-pressure pipe lines. These field stations require precise design engineering due to the wide range of pressure-volume operating conditions encountered.

Distribution Plant Stations. Distribution plant stations compress gas from a holder supply to medium- or high-pressure distribution lines at about 20 to 100 psig (1.4 to 7 kg/cm^2), or compress gas into bottle storage at pressures up to 2500 psig (175 kg/cm^2).

Pipeline Booster Stations. Stations of this type are used in gas transmission line service. The volume through these stations is usually quite large with compression ratios below 2. The pressure range is generally between 200 and 1000 psig (14 and 70 kg/cm^2), sometimes as high as 1200 psig (84 kg/cm^2). However, this upper limit is continuously being challenged and gas transmission systems with an ASME Class 900 pressure rating (150 kg/cm^2/2160 psi) are being considered.

Compressor Station Layout

A typical compressor station arrangement can be broken down into three principal systems:

- Main Gas System
- Unit Gas System
- Auxiliary Gas System

Main Gas System. The main gas system includes the main gas piping and equipment between the transmission pipeline and the compressor unit suction and discharge leads. Equipment encompasses:

- Station Block Valves
- Station Bypass Valve
- Station Purge Valve
- Gas Scrubbers
- Orifice Fitting
- Station Surge Valve
- Station Relief Valves
- Station Blowdown Valve

Unit Gas System. The unit gas system includes the suction and discharge leads from the main gas header to the compressor and back to the main gas header. Equipment basically consists of:

- Unit Block Valves
- Unit Bypass Valve
- Unit Purge Valve
- Unit Vent Valve

Auxiliary Gas System. The auxiliary gas system supplies the gas needed for compressor start-up and operation and for other facilities (such as power generation and valve actuation) within the compressor station which require gas. The subsystems include:

- Fuel Gas System
- Starting Gas System
- Utility Gas System

Gas enters the station through the station block valve, passes through the scrubber, orifice meter, and unit suction block valve to the compressors where it is compressed, and is then discharged through a unit discharge block valve to the station discharge piping and block valve back to the transmission line.

Piping

In the United States, compressor station piping design is governed by the minimum requirements of the Federal Safety Standard ‘‘DOT Title 49 Part 192 Transportation of Natural and Other Gas by Pipeline.’’

For high-pressure transmission service, the law specifies certain types of pipe materials. According to ASME B31.8, compressor station piping must be Class 3 construction. A design factor of 0.5 (Table C6.2) must be used in the steel pipe design formula.

After possible pipe sizes are determined and preliminary station layouts are prepared, pressure-drop studies and thermal piping stress studies must follow. The thermal piping stress analysis determines that stresses in station piping in general stays within allowable limits, and that, in particular, forces and moments on compressor flanges do not exceed allowable values set by the compressor manufacturer. Pipe stresses are caused by the temperature increase when gas is being compressed. The temperature rise across a compressor can range from 0.2 to 4°F (0.1 to 2°C) per 1.5 psi (0.1 kg/cm^2) increase in pressure, depending on the specific gas and pressure involved.

Noise is defined as airborne sound energy within a broad range of frequencies that has the potential to cause either physical or psychological discomfort, or injury to personnel. In order to keep noise levels in station piping within acceptable limits (on the order of 80 decibels), the following gas velocities should not be exceeded:

• Station Main Gas Piping	40 fps (12 m/s)
• Unit Main Gas Piping	25 fps (7.5 m/s)
• Fuel Gas Piping	25 fps (7.5 m/s)

The selection of maximum allowable velocities requires an engineering study for each specific application.

In designing compressor station piping, consideration must also be given to installing piping above ground, or below ground. It should be noted that aboveground piping is easier to monitor for gas leaks and to maintain; however, station yard access may be impeded. For buried piping, the reverse applies.

An additional item often overlooked in station piping design is the installation and placement of drain connections to properly drain the water out of piping after hydrostatic testing.

Components and Equipment

Buildings. Types of compressor station buildings will vary depending on geographic location and climate, whether the station is manned or unmanned, and whether it is located in a rural or a populated area. Structures can vary from a simple shelter to provide some protection from sun and rain, to site-constructed or prefabricated buildings, to totally enclosed prepackaged units ready for installation.

Station Valves—Operators. Main station valves, normally ball, plug, or gate, are actuated by gas or electric motors for ease and speed of operation. Use of motor operators for valves is a function of the availability and cost of power. Gas actuators usually utilize the energy inherent in the pressurized gas of the main line. However, gas actuators will vent spent gas to the atmosphere, so the frequency of valve operation and the quantity of gas needed per operation must be evaluated.

Scrubbers. Gas scrubbers are installed in upstream station piping to remove any liquids or solid particles which may damage the compressors. They tend to be of two types as follows:

Horizontal Inline Type. Horizontal inline scrubbers take advantage of the effect of the helicoid tuyere. The gas, after entering the vessel, is subjected to an extended centrifugal motion which throws the heavier particles to the periphery of the vessel. Here the particles are forced into an annular space, at which point all solid particles are trapped and ejected through the drain. The inlet stream, freed from entrained particles, continues through to the outlet of the separator.

A secondary vortex breaker prevents reentrainment, thereby extending flow range. General scrubber characteristics are as follows:

Efficiency:	99.5 percent of all solids or liquids
Pressure drop:	Low
Cost:	Medium
Flow Range:	Relatively wide
Installation:	Simple and straightforward

Vertical Tube Type. In vertical tube type gas scrubbers, dust-laden gas enters the tube tangentially, creating a high centrifugal force that projects solids and liquid droplets to the walls of the tube. Clean gas reverses flow at the vortex and passes through a concentric outlet tube to an outlet plenum. Impurities continue downward to a storage area for disposal.

Flowmeters. (see Gas Metering.)

Purge, Relief, Surge, and Blowdown. (see Pressure Relief.)

OTHER FACILITIES

Pressure Relief

The following discussion on pressure-relief valves was abstracted from an article by Gary B. Emerson in the February 1987 issue of *Pipe Line Industry.*[1]

A *safety relief valve* is an essential and important piece of equipment on virtually any pressured system. Required by the ASME Boiler and Pressure Vessel Code, Sec. VIII, Pressure Vessels, among others, it must be carefully sized to pass the maximum flow produced by emergency conditions.

Sizing. The sizing formulas for vapors and gases fall into two general categories:

- Based on the flowing pressure with respect to the general categories
- Based on the flowing pressure with respect to the discharge pressure

When the ratio of P_1 (set pressure plus allowable accumulation) to P_2 (outlet pressure) is greater than two, the flow through the relief valve is sonic; the flow reaches the speed of sound for the particular flowing medium. Once the flow becomes sonic, the velocity remains constant; it cannot go supersonic. No decrease of P_2 will increase the flow rate.

Sonic Flow. In accordance with API RP 520, Part 1, Sec. 4.3.2, the formulas used for calculating orifice areas for sonic flow are:

$$A = B_w W (TZ/M)^{0.5} / CKP_1 \tag{C6.14}$$

TABLE C6.8 Gas Constant Based on Ratio of Heats

Gas	Mol. wt.	C_p/C_v	C
Acetylene	26	1.26	343
Air	29	1.40	356
Ammonia	17	1.31	348
Argon	40	1.67	378
Benzene	78	1.12	329
Butadiene	54	1.12	324
Carbon dioxide	44	1.28	345
Carbon monoxide	28	1.40	356
Ethane	30	1.19	336
Ethylene	28	1.24	341
Freon 22	86.47	1.18	335
Helium	4	1.66	377
Hexane	86	1.06	322
Hydrogen	2	1.41	357
Hydrogen sulfide	34	1.32	349
Methane	16	1.31	348
Methyl mercapton	48.11	1.20	337
N-Butane	58	1.09	326
Natural gas (0.60)	17.4	1.27	344
Nitrogen	28	1.40	356
Oxygen	32	1.40	356
Pentane	72	1.07	323
Propane	44	1.13	330
Propylene	42	1.15	332
Sulfur dioxide	64	1.29	346

$$A = B_q Q(TZM)^{0.5}/(6.32CKP_1) \tag{C6.15}$$

where

		Units	
		Imperial	*Metric*
A =	calculated orifice area	in^2	cm^2
B_w =	dimensional constant	1	1.3387
B_q =	dimensional constant	1	21.4881
W =	flow capacity	lb/h	kg/h
Q =	flow capacity	scfm	m^3/min
M =	molecular weight of flowing media	dimensionless	
T =	inlet temperature, absolute	°F + 460	°C + 273

Z =	compressibility factor	dimensionless	
C =	gas constant based on ratio of specific heats (Table C6.8)	dimensionless	
K =	valve coefficient of discharge	dimensionless	
P_1 =	inlet pressure (set pressure + accumulation + atmospheric pressure)	psia	kg/cm^2

Subsonic Flow. The second general category for vapor or gas sizing is generally when P_2 is greater than half of P_1 (back pressure greater than half of inlet pressure).

Using k (ratio of specific heats) and P_1/P_2 (absolute), confirm from Fig. C6.8 that the subsonic ("low pressure") flow formula is required. If so, then determine F factor. If not, use sonic flow formula.

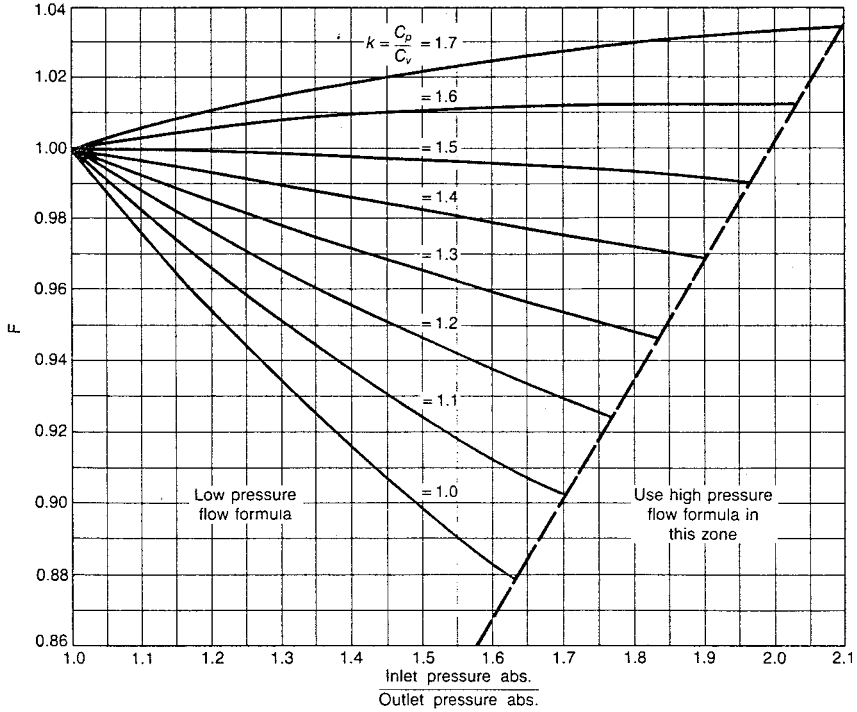

FIGURE C6.8 Low-pressure and high-pressure flow formulas.

$$A = BQ(GTZ)^{0.5}/[863KF((P_1 - P_2)P_2)^{0.5}] \tag{C6.16}$$

where

		Units	
		Imperial	*Metric*
A =	calculated orifice area	in^2	cm^2
B =	dimensional constant	1	21.4881
Q =	flow capacity	scfm	m^3/min
G =	specific gravity	dimensionless	
T =	inlet temperature, absolute	°F + 460	°C + 273
Z =	compressibility factor	dimensionless	
F =	factor obtained from Figure C6.8	dimensionless	
K =	valve coefficient of discharge	dimensionless	
P_1 =	inlet pressure (set pressure + accumulation + atmospheric pressure)	psia	kg/cm^2
P_2 =	outlet pressure (back pressure + atmospheric pressure)	psia	kg/cm^2

After determining the calculated orifice area, select the next-largest standard orifice size from the relief valve manufacturer's catalog.

Selection. The fundamental selection of a relief valve involves the consideration of the two basic types more commonly used.

Conventional spring-loaded relief valves embody the following advantages:

- Competitively priced at lower pressures and in smaller sizes
- Wide range of chemical compatibility
- Wide range of temperature compatibility, particularly at higher temperatures

The disadvantages of conventional spring-loaded relief valves are:

- Metal-to-metal seat not tight near set pressure and usually after valve relieves
- Sensitive to conditions that can cause chatter and/or rapid cycling
- Protection against effects of back pressure is expensive, pressure limited, and creates possible additional maintenance problems
- Testing of set pressure not easily accomplished

Advantages of pilot-operated type relief valves are:

- Seat tight to set pressure (Fig. C6.9)
- Ease of setting and changing set and blowdown pressures
- Can achieve short blowdown without chatter
- Pop or modulating action available
- Easy maintenance
- Easy verification of set pressure without removing relief valve from service
- Flexible—options for remote operation, back pressure protection, valve position indication

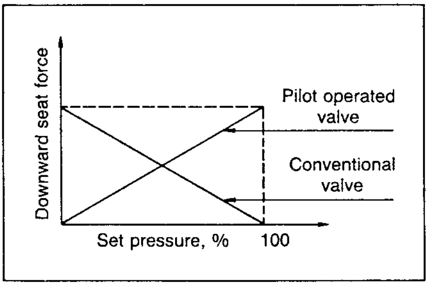

FIGURE C6.9 Setting seat pressure to set flow pressure.

The disadvantages of pilot-operated relief valves are:

- Maximum temperature limitations
- Should not be used in extremely dirty or polymerizing type service

Inlet Piping. The proper design of safety relief valve inlet piping is extremely important. Very often, safety relief valves are added to an installation at the most physically convenient location, with little regard to flow considerations. Pressure loss during flow in a pipe always occurs. Depending upon the size, geometry, and inside surface condition of the pipe, the pressure loss may be large (20, 30, or 40 percent) or small (less than 5 percent).

API RP 520, Part 2, recommends a maximum inlet pipe pressure loss to a safety relief valve of 3 percent. This pressure loss shall be the sum total of the inlet loss, line loss, and when a block valve is used, the loss through it. The loss should be calculated using the maximum rated flow through the pressure-relief valve.

The 3 percent maximum inlet loss is a commendable recommendation but often very difficult to achieve. If it cannot be achieved, then the effects of excessive inlet pressure should be known. These effects are rapid or short cycling with direct spring-operated valves or resonant chatter with pilot-operated relief valves. In addition, on pilot-operated relief valves, rapid or short cycling may occur when the pilot pressure sensing line is connected to the main valve inlet. Each of these conditions results in a loss of capacity.

Pilot-operated valves can tolerate higher inlet losses when the pilot senses the system pressure at a point not affected by inlet pipe pressure drop. However, even though the valve operates satisfactorily, reduced capacity will still occur because of inlet pipe pressure losses. The sizing procedure should consider the reduced flowing inlet pressure when required orifice area, A, is calculated.

A conservative guideline to follow is to keep the equivalent L/D ratio (length/diameter) of the inlet piping to the relief valve inlet to five or less.

Discharge Piping. Discharge piping for direct spring-operated valves is more critical than for pilot-operated valves. As with inlet piping, pressure losses occur in discharge headers with large equivalent L/D ratios. Excessive back pressure will reduce the lift of a direct spring-operated valve, and enough back pressure (15 to 25 percent of set + overpressure) will cause the valve to reclose. As soon as the valve closes, the back pressure in the discharge header decreases and the valve opens again, with the result that rapid cycling can occur.

Pilot-operated relief valves with the pilot vented to the atmosphere or with a pilot balanced for back pressure are not affected by back pressure. However, if the discharge pressure can ever exceed the inlet pressure, a back-flow preventer must be used.

The valve-relieving capacity for either direct- or pilot-operated relief valves can be affected by back pressure if the flowing pressure with respect to the discharge pressure is below critical (subsonic flow).

Balanced bellows valves (direct spring-operated) have limitations on maximum permissible back pressure due to the collapse pressure rating of the bellows element. This limitation will in some cases be less than the back pressure limit of a conventional valve. Manufacturer's literature should be consulted in every case. If the bellows valve is used for systems with superimposed back pressure, the additional built-up back pressure under relieving conditions must be added to arrive at maximum back pressure.

Satisfactory performance of pressure-relief valves, both as to operation and flow capacity, can be achieved through the following good discharge piping practices:

- Discharge piping must be at least the same size as the valve outlet connection and may be increased when necessary to larger sizes.
- Flow direction changes should be minimized, but when necessary use long-radius elbows and gradual transitions.
- If the valve has a drain port on its outlet side, it should be vented to a safe area. Avoid low spots in discharge piping; preferably pitch piping away from valve outlet to avoid liquid trap at valve outlet.
- Proper pipe supports to overcome thermal effects, static loads due to pipe weight, and stresses that may be imposed due to reactive thrust forces must be considered.

Reactive Force. On large-orifice, high-pressure valves, the reactive forces during valve relief are substantial, and external bracing may be required (see Fig. C6.10).

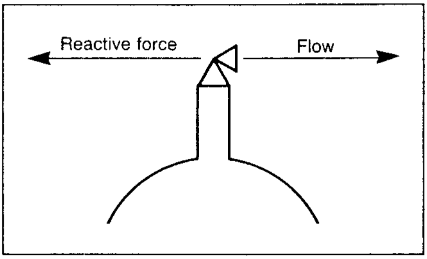

FIGURE C6.10 Reactive forces during valve relief.

API RP 520, Part 2 gives the following formula for calculating this force.

$$F = [Q_h/366][(kT/(k+1)M]^{0.5} \qquad \text{(C6.17)}$$

where

		Units	
		Imperial	*Metric*
$F =$	reactive force at valve outlet centerline	lb	kg
$Q_h =$	flow capacity	lb/h	kg/h

$k =$	ratio of specific heats (C_p/C_v)	dimensionless	
$T =$	inlet temperature, absolute	°F + 460	°C + 273
$M =$	molecular weight of flowing media	dimensionless	

If bracing is not feasible, a dual-outlet valve (available in some pilot-operated safety relief valves) can be used. The reactive forces are equal but opposite, resulting in zero force on the valve outlet, but if redirected can still impose loads that must be reacted to in some manner.

Testing. Using DOT Title 49, Part 192.739 as a guideline, each valve should be inspected at least once a year to determine that it:

- Is in good mechanical condition
- Will operate at the correct set pressure
- Has adequate capacity and is operationally reliable
- Is properly installed and protected from dirt, liquids, or other conditions that might prevent proper operation.

The effectiveness of a safety relief valve installation depends greatly on proper sizing and selection of the valve type, suitable installation conditions, and proper and timely testing of the valve.

Pressure Regulation

Good regulation of high-pressure gas is important for two reasons:

- To protect low-pressure equipment from becoming overpressured and becoming a hazard.
- If located near an orifice meter station, a regulator station must operate smoothly or it will result in a chart record which is impossible to interpret accurately.

Types of Regulator. The type of load to be controlled usually dictates the type of regulator to be selected:

- *Globe Bodied*: The globe-bodied control valve has been the standard for the gas industry for many years and performs well in a wide range of applications. When properly sized and mated with a good controller, it is very well-suited for difficult applications such as pressure control on a plant where load changes rapidly. However, it becomes very large and difficult to maintain when sized to control large loads with low pressure drops. The globe-bodied regulator is also inherently noisy.

  With some relatively new designs, the disadvantages of the globe-bodied control valve are being overcome. Patented trim designs control flowing velocities by forcing the gas through a large number of very small flow paths with multiple 90° turns. The resulting reduced flowing velocities effectively minimize erosion, noise, and vibration, and result in enhanced process control.

- *Expansible Tube*: The expansible tube regulator is extremely simple in its construction and principle of operation. On many applications it does not require a controller but operates with a pilot regulator.

  The expansible tube is by nature quieter than many regulators and it has good low-flow characteristics and tight shutoff. It does have a minimum differential pressure requirement of 10 to 50 psi (0.70 to 3.52 kg/cm^2), depending on size, which precludes its use in some applications.
- *Ball Valve*: The ball valve is best suited to large loads where small pressure drops are required. This is often the case in flow control applications or where pipeline pressure varies from time to time. The ball valve can perform a double duty when used as a monitor regulator and as an isolating valve on one side of a primary regulator.

  Ball valves are inherently noisy and can give erratic control if not maintained properly. Due to their large capacity, it is often important to consider pressure losses through adjacent piping when sizing this type of regulator.

Influence on Station Design. Whichever type regulator is selected, the way it is installed is important for successful operation. For most applications, it is best to have at least two parallel units. If the load varies widely, *split range* control is used, requiring two regulators, one to control low flows and a large-capacity unit to come in when required. For critical applications, it is desirable to have a standby regulator which would not normally be used but would open in an emergency.

When necessary to make a very large pressure reduction, it is best handled in two stages, with each regulator making about half the cut. Two-stage regulation can enhance measurement if one stage is placed on each side of the measuring station.

The upstream regulators should be used to control pressure in order to maintain a constant pressure at the measuring station. Downstream regulators can be used to control flow or to control customer pressure. As much volume as possible should be provided between the two regulator gauges; otherwise stable control may be difficult to achieve.

Overpressure Protection. The most important part of designing a regulator station is being as sure as possible that the system downstream cannot be overpressured. The first step in protection is strict compliance with all safety regulations and, in particular, Part 192 of the Department of Transportation Safety Regulations (DOT 192).

Basically DOT requires secondary protection if it is possible for the pressure upstream of a regulator to reach a level which will be dangerous to the downstream system. Secondary protection may be provided either by a monitor regulator installed in series with the primary regulator or by a relief valve.

There are systems, however, where a safety/relief valve may be the best selection. If a regulator feeding a small-capacity system fails suddenly, a monitor may be too slow to prevent the system from being overpressured. A relief valve should be provided on small downstream systems to take off valve leakage if the load is cut off completely.

Gas Metering

Efficient measurement and control of high-pressure natural gas is vital. A measurement error of only 1 percent can cost thousands of dollars a day at a single large-volume station.

Measurement. Measurement requirements in the gas industry can be broken into two broad categories:

1. *Custody Transfer:* Most important and demanding is custody transfer at a station measuring gas flowing from one company to another. The orifice meter has dominated the field in measurement of large volumes of gas at high pressure. However, turbine meters and rotary meters are being used more and more where better accuracy is justified.
2. *Control.* Control, or check measurement, is used for routing gas toward a customer, control of compressor stations, and so forth. Repeatability is the most important feature of such measurement, and the complexity and expense of custody transfer type metering are not usually justified.

Gas industry meters operate on simple physical principals and have a long history of reliable and accurate performance. The commonly used meters fall into two categories: *displacement types* such as diaphragm, rotary-lobed impeller, and rotary vane shown in Fig. C6.11 and C6.12; and *rate-of-flow (velocity)* meters such as orifice meters and turbine meters shown in Fig. C6.13.

Tables C6.9 and C6.10 list factors which affect selection of the five meter types used in the gas industry. The tables are intended as a guide and should not be used without further study when selecting the best meter for a particular application. Capacity ranges given in Table C6.9 are shown graphically in Fig. C6.14 The ranges are representative and are intended to give preliminary information for specific problems. Since the chart reflects information from many manufacturers, individual model lines may not have the exact capacity shown.

A relatively recent addition to the long line of meters available to the gas industry is the ultrasonic gas flow meter. An array of ultrasonic transducers placed at angles across the bore of the meter tube measure the time it takes for sound to travel in a number of parallel planes. Sound transit times are measured with and against the flow through the meter. Given that travel time in the direction of flow is less than that against the flow, and the transducer locations are a known constant, the mean velocity of the gas can be calculated by averaging the measurements from each plane. The accuracy of the ultrasonic meter has evolved to the point now that it can determine gas flow rates to custody transfer standards.

The major advantage of the ultrasonic gas flow meter is its nonintrusive design. There are no parts in the gas stream to obstruct flow. There are also no moving parts requiring lubrication and maintenance.

Leak Detection

Leak detection for both gas and liquid pipelines, and especially for those fluids such as ethane and propane that are sometimes liquid and sometimes gas, has been an industry problem for many years. Public attention to the subject is now widespread.

The safety record of the pipeline industry is quite good. Measured in terms of accidents (defined by the U.S. Department of Transportation regulations in terms of dollars and fluid loss) per 1000 mi (1600 km) of pipeline, deaths per ton mile of cargo moved, or any other scale, the pipeline record is better than other means of transportation by at least an order of magnitude.

The causes of leaks are many and varied, but over 70 percent are accounted for by accidental damage from external sources, corrosion, and defective pipe.

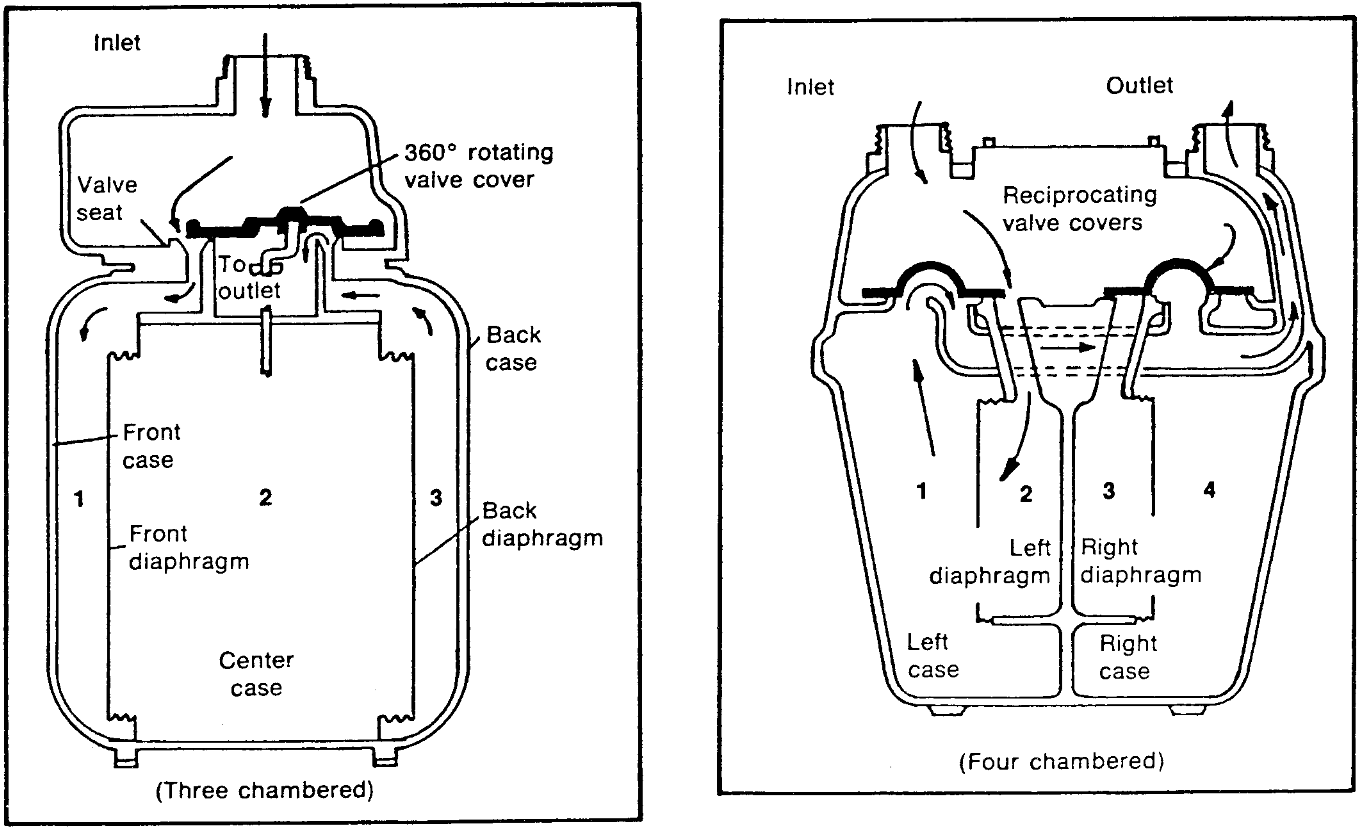
Inlet
Valve seat
360° rotating valve cover
To outlet
Back case
Front case
1
2
3
Front diaphragm
Back diaphragm
Center case
Inlet
Outlet
Reciprocating valve covers
1
2
3
4
Left diaphragm
Right diaphragm
Left case
Right case

(Three chambered)

(Four chambered)

FIGURE C6.11 Diaphragm displacement meters operate by alternately filling chambers of known volume.

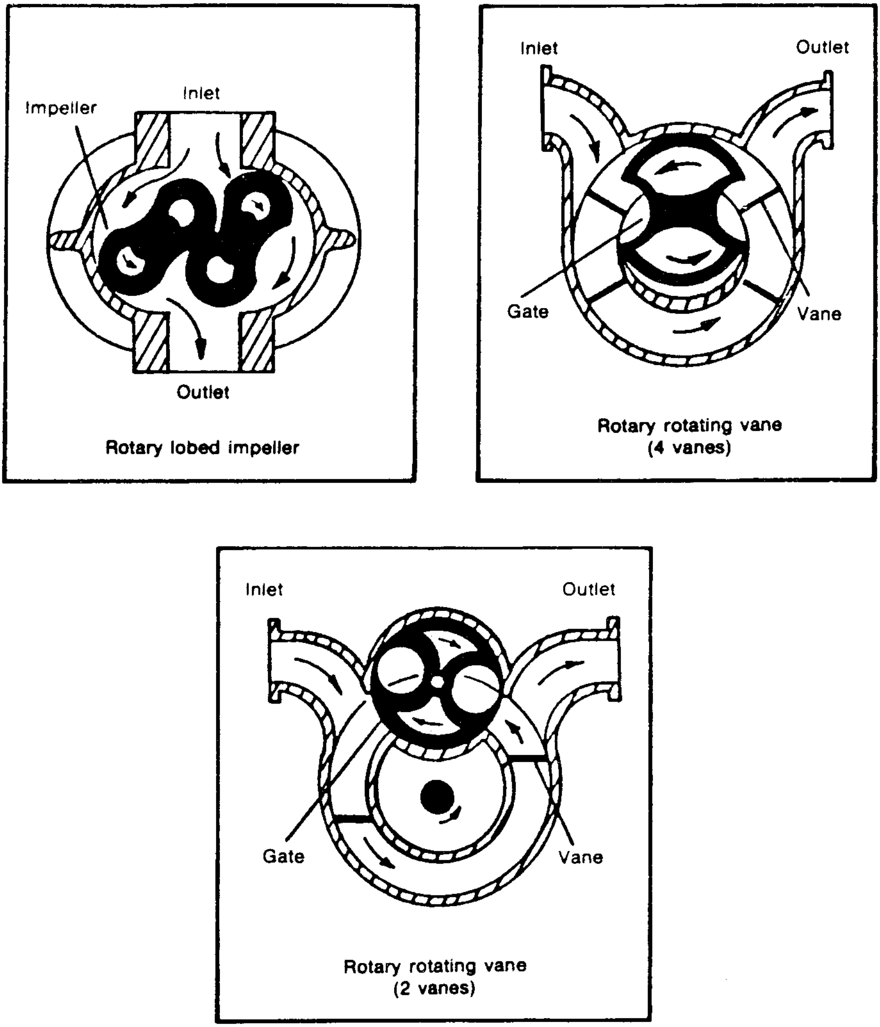
Impeller
Inlet
Outlet
Rotary lobed impeller
Inlet
Outlet
Gate
Vane
Rotary rotating vane
(4 vanes)
Inlet
Outlet
Gate
Vane
Rotary rotating vane
(2 vanes)

FIGURE C6.12 Rotary displacement meters, like diaphragm meters, measure gas flow by alternate filling and emptying of fixed volume chambers. A counter or dial registers the total gas amount.

Historically, the number one source of leaks has been external corrosion, but modern pipe coatings and the almost universal application of cathodic protection system in the last 60 years has all but eliminated corrosion leaks on the newer pipelines. Modern mill practices and more conscientious hydrostatic testing have almost eliminated defective pipe as a cause of leaks on new lines. Of ever-increasing importance, however, is the problem of damage to pipelines by construction machinery. The problem is made worse by the fact that the very machine that does the damage comes equipped with a spark or hot exhaust to ignite the leaking fuel. It

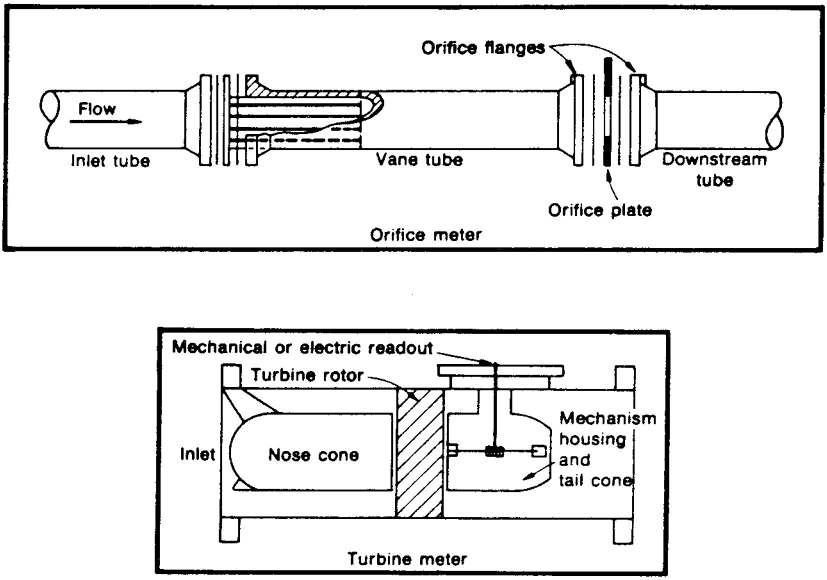

FIGURE C6.13 Velocity flow meters pass a steady gas stream. Flow is detected as a differential pressure in the orifice meter and as rotor movement in the turbine meter.

is recommended that such protective measures as extra-depth burial, concrete slabs and/or warning tapes buried above pipe, and extra line markers be considered at major road crossings and in city growth areas.

One of the problems with leak detection is the frustration of knowing that when a leak has been detected a large part of the damage has already been done. It is well and good to say that early remedial action is needed. However, one must know what action to take—for example, to immediately slam a mainline valve shut would almost invariably be the wrong thing to do on a liquid line. Any action following a leak signal must be thought out very carefully. The other frustrating problem with leak detection is that it may be impossible to do at any reasonable cost.

Rudimentary leak detection was carried out for years by reporting hourly meter readings. Minor differences in reading time, temperature, line pack, and so forth made the result somewhat erratic, but a continuous shortage in delivery on a small pipeline was sufficient cause to assume a leak. Large leaks or *line breaks* were detected (sometimes automatically) by the combinations of suction and discharge pressure with flow at pump stations; that is, falling discharge pressure combined with increased flow meant a leak downstream; falling suction combined with decreased flow meant a leak upstream. The difference today is in the magnitude of the problem. The ±2 percent deficiency detectable on an NPS 8 (DN 200) line transporting 25 million cubic feet per day (25 MMCFD; 708 Mm^3/D) was a 0.5 MMCFD (14 Mm^3/D) leak. Today, the ±0.2 percent deficiency (may be) detectable by a sophisticated leak detection system on an NPS 42 (DN 1050) line transporting 1000 MMCFD (28 MMm^3/D) is a 2 MMCFD (57 Mm^3/D) leak.

Some new, patented devices which "listen" for the pressure wave which is generated by a suddenly occurring leak are state of the art leak detection. Today

TABLE C6.9 Summary of Gas Meter Selection Factors

Factor	Gas properties						Meter characteristics							
Meter type	Maximum pressure[1]		Flowing fluid temperature limits		Suitability for corrosive gas	Influence of condensate	Base maximum capacity range		Accuracy % of reading 10 50 90	Base range-ability	Type of scale	Common construction materials[2]	Pressure loss at base maximum capacity	
	psig	kg/cm^2	°F	°C			Mcfh	m^3/h					psi	kg/cm^2
Diaphragm displacement	1000	70.3	−30 to +140	−34 to +60	No	Potential	0.2 to 12	5.7 to 339.8	±1	200:1	Uniform	Al/Cl/Brass/ Plastic/Zinc alloy	0.02 to 0.07	0.001 to 0.005
Rotary rotating vane	1440	101.2	−40 to +145	−40 to +63	Yes (with special bearings & materials)	None	3 to 38	85 to 1076	±1	25:1	Uniform	Anod. AL/300/SS /Steel/Bronze	0.04	0.003
Rotary lobed impeller	1440	101.2	−40 to +140	−40 to +60	Yes (with special bearings & materials)	None	1.5 to 102	42.5 to 2888	±1	20:1	Uniform	AL/CI/Steel	0.7	0.005
Gas turbine	1440	101.2	−40 to +145	−40 to +63	Yes (with special materials)	None	4 to 150	113.3 to 4248	±1	5:1 to 25:1	Uniform	AL/DU/CS	0.04	0.003
Orifice	5000	351.5	−65 to +500	−54 to +260	Yes	Potential	22 to 1500	623 to 42477	±1½	3:1 to 4½:1	Square root	FS/SS/CS	2.5	0.176

[1] Refer to manufacturer's published literature for the maximum pressure rating of a specific meter size.

[2] Common construction materials: AL = Aluminum, CI = Cast iron; CS = Cast steel; DU = Ductile iron; FS = Forged steel; SS = Stainless steel.

TABLE C6.10 Summary of Gas Meter Selection Factors

Factor	Installation factors						Economic factors				
Meter type	Normal line size		Straight pipe reqmts (no. of pipe diameter)	Ambient temperature range		Limitations	Approx. first cost[3]	Life expectancy		Maintenance cost[4]	Installation cost[4]
	NPS	DN		°F	°C			Between repairs (years)	Total (years)		
Diaphragm displacement	¼ to 4	8 to 100	None	−30 to +40	−34 to +60	Horizontal	220	8 to 10	30 to 40	L	M
Rotary rotating vane	2 to 6	50 to 150	None	−40 to +145	−40 to +63	Not critical	130	3 to 6	10 to 25	M	L
Rotary lobed impeller	1.5 to 10	40 to 250	None	−40 to +140	−40 to +60	Horizontal and leveled	150	3 to 6	10 to 25	M	L
Gas turbine	2 to 12	50 to 300	4 to 10	−40 to +145	−40 to +63	Horizontal	125	3 to 6	10 to 25	M	L
Orifice	2 to 16	50 to 400	3 to 40	−40 to +170	−40 to +77	Horizontal	100	1 to 3	10 to 15	H	M

[3] First cost ratio is based upon a NPS 2 (DN 50) orifice meter sized to measure approximately 5 Mcfh (141.6 m^3/h) at atmospheric pressure.

[4] Maintenance and installation costs: H = High; M = Medium; L = Low.

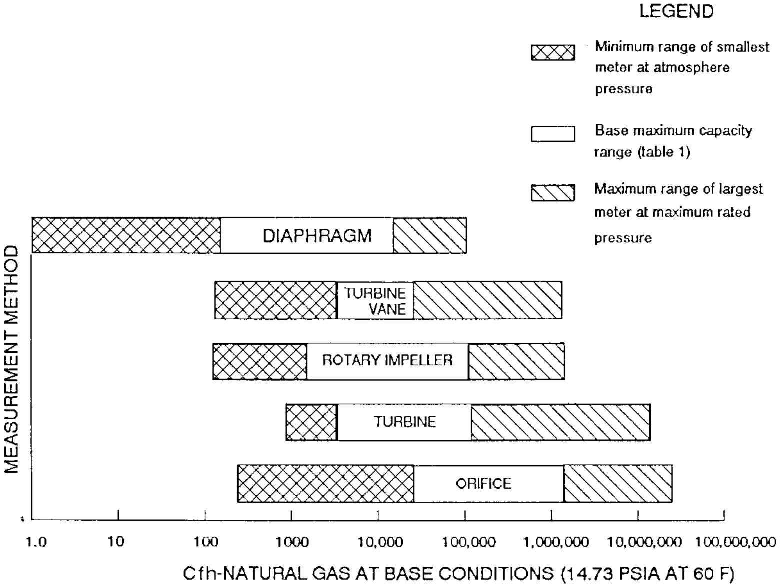

FIGURE C6.14 Gas measurement meter capacities.

a leak is defined as "the loss that can be measured with existing instrumentation" (probably about 0.1 percent of steady state flow).

Real-time computer modeling techniques have been developed which have already improved the sensitivity of old-fashioned "meter in-meter out" techniques even under transient flow conditions. Accuracy is achieved by the use of remote terminal units (RTUs), high-precision instrumentation, and an on-line computer.

Scrapers and Scraper Handling

Purpose of Scrapers and Spheres. At various times throughout the life of a pipeline a need is found to send a *scraper* (pig) or *sphere* through the line. This may be for any one or combination of the following:

- *Initial Cleaning*: On completion of a section of pipeline, at least one scraper is run to push out air as well as trash, rocks, weld slag, and so forth preparatory to hydrostatic testing.
- *Sizing Run*: Before a line is put in service, usually before hydrostatic testing, a scraper with a steel plate, or a "caliper" pig, is run in order to make sure the pipe was not damaged during construction and that all future pigs will pass unrestricted.
- *Dewatering Scrapers/Spheres*: During commissioning of the pipeline, a number of scrapers are used to displace the water left after hydrostatic testing.

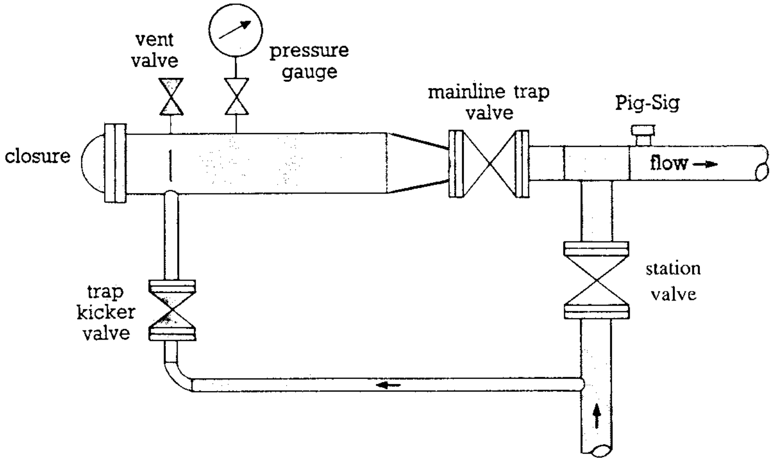
vent valve
pressure gauge
mainline trap valve
Pig-Sig
closure
flow →
station valve
trap kicker valve

Launching

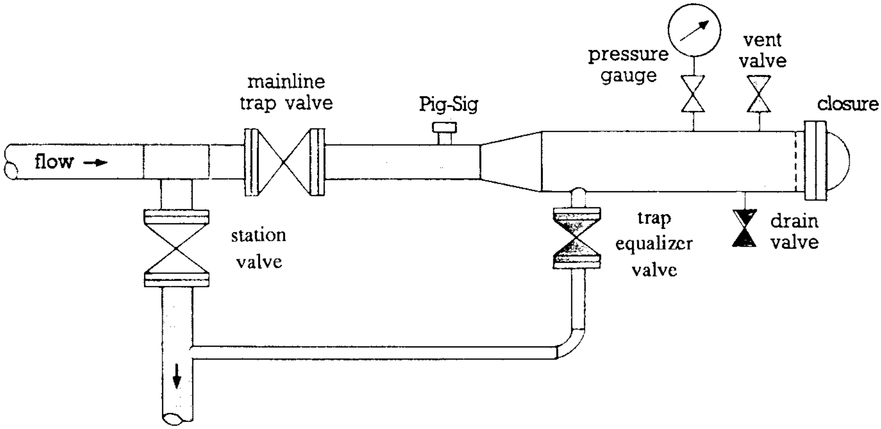
pressure gauge
vent valve
mainline trap valve
Pig-Sig
closure
flow →
station valve
trap equalizer valve
drain valve

Receiving

FIGURE C6.15 Launching and receiving scraper traps for gas service. *(T.D. Williamson.)*

- *In-Service Cleaning*: During normal pipeline operation pipelines accumulate water, corrosion products (rust, scale), condensate and compressor oil, sand, and dust which must be cleaned out on a regular basis to maintain efficiency of operation.
- *Deslugging*: On some two-phase pipelines, spheres are run on a scheduled basis to push condensate into the slug catchers.

- *Inspection*: Special instrumented "smart" pigs may be run from time to time to check corrosion, listen for leaks, or check damage after an accident.

Some of these uses require special scrapers with knives (for cutting waxy deposits) or brushes (for cleaning rust/scale) or noise making devices, and so forth.

Scraper Handling Devices. Because of the variety of uses for which scrapers are employed, a wide rang of scraper-handling equipment is required. The basic horizontal scraper trap has proved to be convenient for general services (see Fig. C6.15). There are two types of scraper traps, one for launching and one for receiving. The difference between the two is the point of entry of the bypass (kicker/equalizer) lines into the barrel, and sometimes the barrel length.

The traps are equipped with a barrel that has an internal diameter 2 to 4 in (50 to 100 mm) larger than that of the mainline, a hinged closure, a full-opening (through conduit) trap valve, side-entering barred tee, and a bypass line with a valve. The trap assembly launches or receives a scraper by pinching the station valve with the trap and the bypass valves both open. This controls the movement of the pig out of the launcher or into the receiver.

Scraper traps are placed at the initial and terminal points of the pipeline and at any other point where it is required to start or receive a scraper. It is not always necessary to put traps at a change in pipe size as multisized scrapers are available (within limits), nor is it necessary to put scraper traps at every compressor station. Usually it is the length of the pipeline section and the expected wear on the scraper that will indicate where scraper traps are required. Figure C6.16 is a simple piping diagram of the essential piping and valves in a booster station.

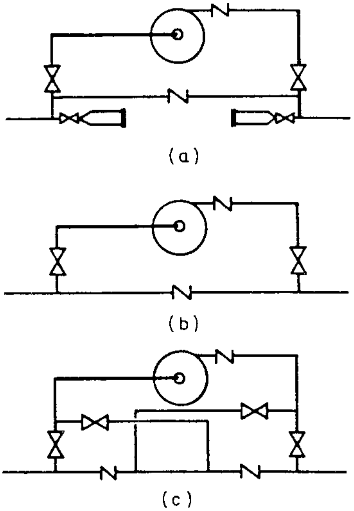

FIGURE C6.16 Piping arrangement for a station (*a*) with scraper traps, (*b*) without traps, where a scraper is passed by shutting down, and (*c*) with pipe and valving for bypass without shutdowns.

Pin Ball Machines. On some pipelines where spheres are used frequently for cleaning condensate or for separating product batches, a special adaptation of the basic scraper trap allows for loading of several spheres in the launcher and releasing them on signal or by timer. The receiver is long enough to receive as many spheres as can be launched. Both launcher and receiver are sloped so that gravity aids in the operation.

Layout. Scrapers and spheres are heavy, especially in the larger sizes, and may require davits or cranes to maneuver them into and out of the trap. Traps should also be located with truck and machinery access in mind. Gravity drainage to a sump tank should be provided to collect liquid from the trap drain connection and from spillage at the trap door.

CORROSION PROTECTION

Gas system pipelines are subject to both external and internal corrosion. In general, external corrosion is more serious in that it can drastically reduce the life of the pipeline and impair its safety. Internal corrosion, apart from exceptional cases of corrosive fluid components such as H_2S and CO_2, is usually a much more gradual process resulting in a lowering of pipeline efficiency. Regular line cleaning, as discussed in ''Scrapers and Scraper Handling,'' can be utilized to take care of the pipe internally for most installations. However, with an unusually corrosive fluid, internal coatings or inhibition might also be needed.

The corrosion rate of steel is higher in low-resistance soils or seawater that it is in high-resistance soils such as dry sands. Corrosion rates are also higher in turbulent waters than when the water is stagnant.

The two principal parts of corrosion protection are *pipe coating* (or insulation) to increase the pipe to soil resistance and *cathodic protection* (impressed current or galvanic anodes) to make the pipe always cathodic.

Coatings

For many years pipelines were coated with processed natural substances such as asphalt or coal-tar enamels, usually reinforced with fiberglass mesh, and overwrapped with felt sheeting. Synthetic organic plastic materials have been developed relatively recently for external coatings and these are now in common use.

Coal Tar and Asphalt Enamels. These coatings are applied hot over a cold primer and usually reinforced with a fiberglass inner wrap and protected with a felt outer wrap. They were often applied ''over the ditch'' by special ''coat and wrap'' machines. Well-founded environmental concerns over the toxicity of the fumes from the hot coal tar and asphalt enamels have curbed their use. However, these coatings are still being plant-applied under strict controls.

Asphalt Mastics. This coating is commonly applied in a shop. It forms a thick ½ to ⅝ in (12.7 to 15.9 mm) layer around the pipe, and has mineral fillers which provide built-in reinforcement. Generally, it does not require an outer wrap.

Mastics have been extensively used for submarine lines, for swamp crossings, and for some land lines. They are not in common use today.

Extruded Plastic Coatings. These coatings are usually applied in a shop, after sandblast cleaning of the pipe and priming with a thin layer of mastic. They afford good protection because the mastic exudes through nicks or scratches and heals breaks in the coating. Other systems include a bonded polyethylene jacket with a nonbonded PVC (polyvinylchloride) outer rock-guard. Extruded coatings are often used where long-term dependability is required for city service or for swamp service. They are also used on submarine lines.

Tape Coatings. These coatings usually have an adhesive backing, and may be applied in a shop or yard, or over the ditch. Polyethylene and polyvinylchloride tapes are readily available. Polyethylene may be favored for its chemical, thermal, and physical stability.

Fusion-Bonded Epoxies. These are very thin coatings applied in a shop. The pipe is degreased, sandblasted, and heated to the fusion temperature. Epoxy powder is applied electrostatically and fuses to a uniform coat on the heated surface. Pinholes and other defects may be repaired with hot stock or with a liquid epoxy resin and catalyst compound. Refer to Chap. B10.

The coating is tough and easy to repair. However, it must not be too thick or it may crack during bending, and is subject to cathodic disbonding.

Field Joint Coatings. When each length of pipe has been coated individually, the field joint must still be protected after it is welded. Generally, the field joint coating material should be similar to the main pipe coating, and suitable for application in relatively uncontrolled field conditions.

Asphalt and coal tar enamels are usually applied by hand, along with the appropriate inner and outer wraps. Plastic tapes are also applied by hand.

For extruded plastic coatings, plastic shrink sleeves with mastic backing may be used. They are slipped over the pipe before the joint is welded, and are moved to cover the joint afterwards. Shrink sleeve wraps, which can be applied over the completed weld at any time, are also available. Application of heat then causes the plastic to shrink tightly down on the joint and on the coating to either side.

Mastic is usually made up by surrounding the joint with a thin metal shield and pouring hot mastic into the shielded space. This usually bonds well with the mastic to either side and makes a satisfactory tight joint.

Fusion-bonded epoxy coatings may be made up by heating the joint with a preheat coil and applying the resin powder. The pipe surfaces must be sandblasted before the powder is applied.

Liquid epoxy resin and catalyst compound, applied by hand, may also be used for field joint protection.

Internal Coatings. Where corrosive components are encountered in the gas being transported, the pipe can be protected internally by adding inhibitors to the fluid or by coating the pipe internal wall. An economic comparison can assist in making a choice. Continued use of inhibitors tends to be costly and introduces complications both in injection equipment and in the resultant effect on delivered gas analysis.

Coal tar and asphaltic components for internal coating are not difficult to apply, but if deterioration occurs during the life of the pipeline it can seriously affect the pipeline efficiency.

Epoxy coatings give good protection, long life, and a low friction factor. The main problem is to get a satisfactory bond between the shop-applied internal coating and the machine- or hand-applied coating on the joints after welding. This involves special application procedures which must be conscientiously followed in the field.

Cathodic Protection

Cathodic protection is a method of inhibiting corrosion that has been used for over a century. It is applicable to all types of pipe metals, although it is used mainly for steel pipe. The technique is to connect the pipeline to an anode bed and to make the pipe behave as a cathode by impressing a direct current voltage so that the anode bed corrodes and not the pipe. Where this is not practicable (as on long

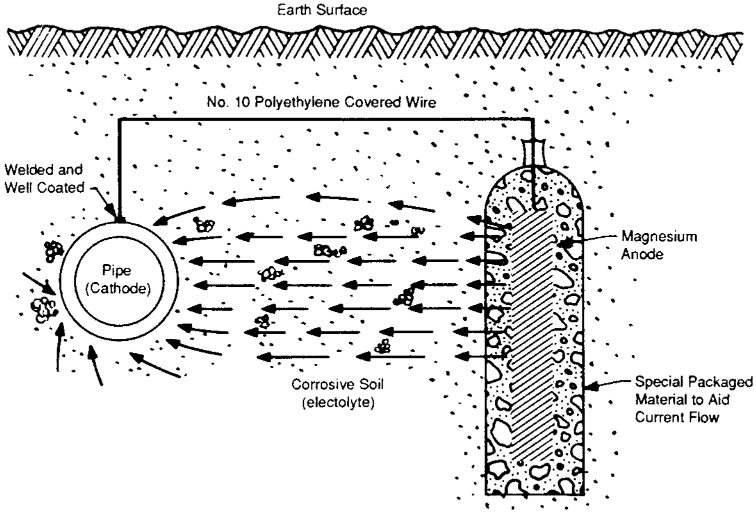
Earth Surface
No. 10 Polyethylene Covered Wire
Welded and Well Coated
Pipe (Cathode)
Magnesium Anode
Corrosive Soil (electolyte)
Special Packaged Material to Aid Current Flow

FIGURE C6.17 Magnesium anode protects coated steel pipe; current flows from anode through earth to pipe. *(Pipeline & Gas Journal, February 1984.)*

water crossings), passive protection may be attained by attaching sacrificial anodes directly to the pipe (see Fig. C6.17).

Cathodic protection is particularly important for coated pipe, to overcome the effect of pinholes or accidental breaks in the coating, which would otherwise permit local corrosion cells to form. Being localized, these cells are highly active and can rapidly penetrate the pipe wall.

Insulating flanges are necessary to ensure the integrity of the section of pipeline to be protected. Test leads installed at intervals along the length of the line during construction are used to monitor the voltage levels during the life of the pipeline. Regular measurements and maintenance, as required, ensure the continued effectiveness of the cathodic protection system.

Impressed Current Systems. Impressed current systems are generally installed where alternating current is available for the rectifier units (see Fig. C16.18). Since the units can be obtained in a wide range of output voltage and current combinations, they are used (1) where soil or water electrical resistivities are high and (2) where total current requirements are large.

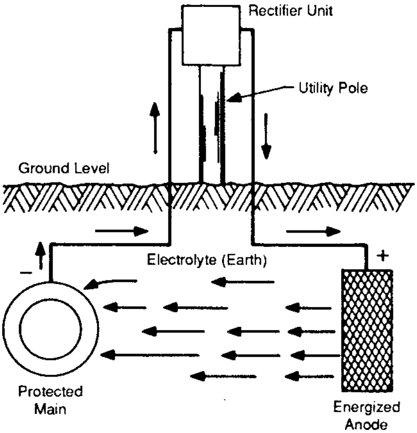
Rectifier Unit
Utility Pole
Ground Level
Electrolyte (Earth)
−
+
Protected Main
Energized Anode

FIGURE C6.18 Additional current for cathodic protection requires use of a rectifier. *(Pipeline & Gas Journal, February 1984.)*

Direct current for cathodic protection is provided by a transformer-rectifier combination. Where alternating current is not available for standard rectifier units, alternative direct current sources that can be used are thermoelectric generators, diesel generators, and solar power systems.

Typical anode materials for impressed current systems are graphite, high-silicon iron, lead-silver alloys, and platinum on a titanium or columbium substrate. On occasion scrap steel is used, but usually only because of its availability. As an anode material, steel is consumed at a rate of about 20 lb (9.1 kg) per ampere year. Consumption for graphite and silicon iron is approximately 1 lb (0.45 kg) per ampere year, for lead-silver about 0.1 lb (0.045 kg) per ampere year, and for platinum about 6 to 20 milligrams per ampere year.

Galvanic Protection. Galvanic protection is a passive system which depends on the principle that coupling two dissimilar metals in the same electrolytic environment causes accelerated corrosion of the more active metal and protection of the less active metal. The more active metal is preferentially consumed and is, therefore, called a *sacrificial anode.*

Galvanic protection is often used in preference to an impressed current installation as a temporary measure during construction or when the current requirements are low and the electrolyte has relatively low resistivity (less than 10,000 ohm-centimeters). Clearly, it has an advantage when there is no source of electrical power, or when a completely underground system is desired. Capital investment will generally be lower and is often the most economical method for short-life protection.

Insulating Joints

Insulating joints are required for electrical isolation of the cathodically protected section of the pipe from those sections not protected. In their simplest form, the joints may be flange connections with special arrangements of insulating gaskets, washers, and sleeves to prevent electrical contact between the bolts and the flanges. Preferably, they may be special unitized couplings in which the insulating features are factory-assembled, and the entire assembly can be welded into the pipeline (see Figs. C6.19 and C6.20).

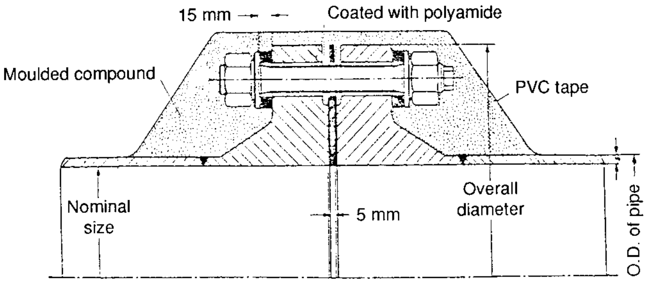

FIGURE C6.19 Insulating flange connection for laying in the ground. *(Eisenbau Albert Ziefle KG.)*

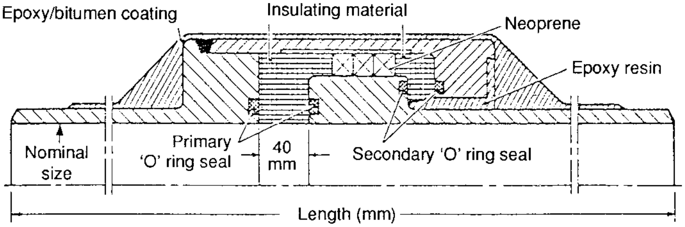

FIGURE C6.20 Monobloc insulating coupling ready for erection by welding in. *(Eisenbau Albert Ziefle KG.)*

Insulating flange connections are made above ground whenever possible. This simplifies installation, makes periodic inspection easier, and minimizes the possibility of a short circuit across the joint.

For underground installation an external application of bitumen or compound molding, covering the whole insulated flange connection, protects it against corrosion and dirt and is absolutely necessary for maintaining the insulating properties of the joint.

INSPECTION AND TESTING

Inspection

ASME B31.8 requires that for piping systems that will operate at 20 percent or more of the specified minimum yield strength of the pipe, the quality of welding must be checked by nondestructive inspection. Such inspection may consist of radiographic examination, magnetic particle testing, or other acceptable methods. The trepanning method of nondestructive testing is specifically prohibited.

ASME B31.8 further specifies that the minimum number of field butt welds to be selected on a random basis from each day's construction for examination must be as noted below. Each weld so selected must be examined over its entire circumference, or as an alternative, the equivalent length of weld must be examined if only a section of the circumference of each weld is examined.

1. 10 percent of welds in Class 1 locations.
2. 15 percent of welds in Class 2 locations.
3. 40 percent of welds in Class 3 locations.
4. 75 percent of welds in Class 4 locations.
5. 100 percent of welds in offshore pipelines, in compressor stations, and at major or navigable river crossings, major highway crossings, and railroad crossings, if practical, but in no case less than 90 percent. All tie-in welds not subjected to a pressure proof test must be examined.

All welds which are inspected must meet the standards of acceptability of the American Petroleum Institute Standard API 1104. If a weld does not, it must be repaired and reinspected.

TABLE C6.11 Test Requirements for Pipelines and Mains to Operate at Hoop Stresses of 30% or More of the Specified Minimum Yield Strength of the Pipe

1	2	3	4	5
Location class	Permissible test fluid	Pressure test prescribed: Minimum	Pressure test prescribed: Maximum	Maximum allowable operating pressure, the lesser of
1 Division 1	Water	1.25 × m.o.p.	None	t.p., 1.25
1 Division 2	Water	1.1 × m.o.p.	None	t.p., 1.1 or d.p.
	Air	1.1 × m.o.p.	1.1 × d.p.	
	Gas	1.1 × m.o.p.	1.1 × d.p.	
2	Water	1.25 × m.o.p.	None	t.p., 1.25 or d.p.
	Air	1.25 × m.o.p.	1.25 × d.p.	
3&4 [Note (1)]	Water	1.40 × m.o.p.	None or d.p.	t.p., 1.40 or d.p.

m.o.p. = maximum operating pressure (not necessarily the maximum allowable operating pressure); d.p. = design pressure; t.p. = test pressure.

General note: This table brings out the relationship between test pressures and maximum allowable operating pressures subsequent to the test. If an operating company decides that the maximum operating pressure will be less than the design pressure, a corresponding reduction in prescribed test pressure may be made as indicated in the Pressure Test Prescribed, Minimum, column. However, if this reduced test pressure is used, the maximum operating pressure cannot later be raised to the design pressure without retesting the line to the test pressure prescribed in the Pressure Test Prescribed, Maximum, column. See paras. 805.214, 845.213, and 845.214 of ASME B31.8.

Note: (1) For exceptions, see para. 841.322(d) of ASME B31.8.

If the pipe is intended to operate at 40 percent or less of the specified minimum yield strength, and pipe size is less than NPS 6 (DN 150), or the number of welds to be inspected is small enough to make nondestructive testing impractical, welding may be inspected visually and approved by a qualified welding inspector.

Testing

ASME B31.8 requires that all pipelines and mains which will be operated at a hoop stress of 30 percent or more of the specified minimum yield strength of the pipe must be given a test for at least 2 hours to prove strength after construction and before being placed in operation. The test requirements are summarized in Table C6.11.

Pipelines and mains operating at less than 30 percent of the specified minimum yield strength of the pipe, but greater than 100 psi (7 kg/cm^2), must be tested as follows:

- In Class 1 locations, a leak test must be made at a pressure in the range from 100 psi (7 kg/cm^2) to that pressure required to produce a hoop stress of 20 percent of the specified minimum yield strength, in all cases where the line is to be stressed to 20 percent or more of the specified minimum yield strength of the pipe and gas or air is the test medium.

- In Class 2, 3, and 4 locations, at the least in accordance with the requirements listed in Table C6.11, except that gas or air may be used as the test medium within the maximum limits sent in Table C6.12.

TABLE C6.12 Maximum Hoop Stress Permissible During Test, % of Specified Minimum Yield Strength

	Class location		
Test medium	2	3	4
Air	75%	50%	40%
Gas	30%	30%	30%

For pipelines and mains that will operate at less than 100 psi (7 kg/cm^2), gas may be used as the test medium at the maximum pressure available in the distribution system at the time of the test.

OPERATION AND MAINTENANCE

The ASME B31.8 Code has established comprehensive guidelines for the operation and maintenance of gas transmission systems. Pertinent sections are paraphrased here.

Pipeline Maintenance

Continuing Surveillance of Pipelines. To maintain the integrity of a pipeline system, procedures for the continuing surveillance of its facilities must be established and implemented. Where unusual operating and maintenance conditions occur, such as failures, leakage history, drop in flow efficiency due to internal corrosion, or substantial changes in cathodic protection requirements, appropriate action must be taken.

When a facility is in unsatisfactory condition, a planned program must be initiated to abandon, replace, or recondition and proof test the facility. If the facility cannot be reconditioned or phased out, the maximum allowable operating pressure must be reduced in accordance with code requirements.

Pipeline Patrolling. A periodic pipeline program must be implemented to observe surface conditions on and adjacent to the pipeline right-of-way, indications of leaks, construction activity other than that performed by the company, and any other factors affecting the safety and operation of the pipeline. Patrols must be performed:

- At least once each year in Class 1 and 2 locations
- At least once each 6 months in Class 3 locations
- At least once each 3 months in Class 4 locations

Weather, terrain, size of line, operating pressure, and other conditions will be factors in determining the need for more frequent patrol. Main highways and railroad crossings must be inspected with greater frequency and more closely than pipelines in open country.

Maintenance of Cover at Road Crossings and Drainage Ditches. If the cover over the pipeline at road crossings and drainage ditches has been reduced below the requirements of the original design and is found to be unacceptable, additional protection such as barriers, culverts, concrete pads, casing, lowering of the line, or other suitable means must be provided.

Maintenance of Cover in Cross-Country Terrain. Where the cover over the pipeline in cross-country terrain does not meet the original design, and it is determined to be at an unacceptable level, additional protection must be provided by replacing cover, lowering the line, or other suitable means.

Leakage Surveys. Periodic leakage surveys on the line must be a part of any company's operating and maintenance plan. The type of surveys selected must be effective for determining if potentially hazardous leakage exists. The extent and frequency of such surveys must be determined by the operating pressure, piping age, class location, and whether the transmission line transports gas without an odorant.

Pipeline Markers. Signs or markers must be installed where necessary to indicate the presence of a pipeline at road, highway, railroad, and stream crossings. Additional signs and markers must be installed along the remainder of the pipeline at locations where there is a probability of damage or interference.

The signs or markers must include the words ''Gas (or name of gas transported) Pipeline,'' the name of the operating company, and the telephone number (including area code) where the operating company can be contacted.

Distribution Piping Maintenance

Patrolling. Distribution mains must be patrolled in areas where construction activity, physical deterioration of exposed piping and supports, or any natural causes could result in damage to the pipe. The frequency of the patrolling must be a function of the severity of the conditions which could cause failure or leakage and the subsequent hazards to public safety.

Leakage Surveys. The type or types of surveys selected for the operating and maintenance plan of a company's gas distribution system must be effective for determining if potentially hazardous leakage exists. Some procedures which may be employed are:

- Surface gas detection surveys
- Subsurface gas detector survey (including bar hole surveys)
- Vegetation surveys
- Pressure-drop test
- Bubble leakage test
- Ultrasonic leakage test

Miscellaneous Facilities Maintenance

Compressor Station Maintenance. The starting, operating, and shutdown procedures for all gas compressor units must be established by the operating company and appropriate steps taken to see that the approved practices are followed.

Inspection and Testing of Relief Valves. All pressure-relieving devices in compressor stations must be inspected or tested or both, and all devices except rupture disks must be operated periodically to determine that they open at the correct set pressure. Any defective or inadequate equipment found must be promptly repaired or replaced. All remote-control shutdown devices must be inspected and tested at least annually to determine that they function properly.

Isolation of Equipment for Maintenance or Alterations. Procedures must be established and followed for the isolation of units or sections of piping for maintenance, and for purging prior to returning units to service.

Storage of Combustible Materials. All flammable or combustible materials in quantities beyond those required for everyday use or other than those normally used in compressor buildings must be stored in a separate structure built of noncombustible material located a suitable distance from the compressor building. All above-ground oil or gasoline storage tanks must be protected in accordance with NFPA 30.

Maintenance of Pressure-Limiting and Pressure-Regulating Stations. All pressure-limiting stations, relief devices, and other pressure-regulating stations and equipment must be subject to systematic, periodic inspections and suitable tests, or reviewed to determine that they are:

1. In good mechanical condition. Visual inspections must be made to determine that equipment is properly installed and protected from dirt, liquids, or other conditions that might prevent proper operation. The following must be included in the inspection where appropriate:
   a. Station piping supports, pits, and vaults for general condition and indications of ground settlement.
   b. Station doors and gates and pit vault covers to ensure that they are functioning properly and that access is adequate and free from obstructions
   c. Ventilating equipment installed in station buildings or vaults for proper operation and for evidence of accumulation of water, ice, snow, or other obstructions
   d. Control, sensing, and supply lines for conditions which could result in a failure
   e. All locking devices for proper operation
   f. Station schematics for correctness

2. Adequate from the standpoint of capacity and reliability of operation for the service in which they are employed and set to function at the correct pressure.
   a. If acceptable operation is not obtained during the operational check, the cause of the malfunction must be determined and the appropriate components must be adjusted, repaired, or replaced as required. After repair, the components must again be checked for proper operation.
   b. At least once each calendar year, relief valves must be reviewed for sufficient capacity. If it is determined that the relieving equipment is of insufficient capacity, new or additional equipment must be installed to provide adequate capacity.

Whenever abnormal conditions are imposed on pressure or flow control devices, the incident must be investigated, and the device inspected and/or repaired. Abnormal conditions may include regulator bodies which are subjected to erosive service conditions or contaminants from upstream construction and hydrostatic testing.

1. An inspection or test, or both, of stop valves must be made to ensure that the valves will operate and are correctly positioned. The following must be included:
    - ***a.*** Station inlet, outlet, and bypass valves
    - ***b.*** Relief device isolating valves
    - ***c.*** Control, sensing, and supply line valves
2. The final inspection procedure must include the following:
    - ***a.*** A check for proper position of all valves with special attention given to regulator station bypass valves, relief device isolating valves, and valves in control, sensing, and supply lines
    - ***b.*** Restoration of all locking and security devices to proper position

Valve Maintenance

Pipeline Valves. Pipeline valves required to operate during an emergency must be inspected periodically and partially operated at least once a year to provide safe and proper operating conditions.

1. Routine valve maintenance procedures must at the least include the following:
    - ***a.*** Servicing in accordance with written procedures by adequately trained personnel
    - ***b.*** Accurate system maps for use during routine or emergency conditions
    - ***c.*** Valve security to prevent service interruptions, tampering, etc., as required
    - ***d.*** Employee training programs to familiarize personnel with the correct valve maintenance procedures
2. Emergency valve maintenance procedures include:
    - ***a.*** Written contingency plans to be followed during any type emergency
    - ***b.*** Training personnel to anticipate all potential hazards
    - ***c.*** Furnishing tools and equipment as required, including auxiliary breathing equipment, to meet anticipated emergency valve servicing and/or maintenance requirements

Distribution System Valves. Valves used for the safe operation of a gas distribution system must be checked and serviced, including lubrication where necessary, at sufficient frequent intervals to assure their satisfactory operation. Inspection must include checking of alignment to permit use of a key or wrench and clearing from the valve box or vault any debris which would interfere with or delay the operation of the valve. System maps showing valve location should be available.

Service Line Valves. Outside shutoff valves installed in service lines supplying places of public assembly, such as theaters, churches, schools, and hospitals, must be inspected and lubricated where required at sufficiently frequent intervals to assure their satisfactory operation. The inspection must determine if the valve is accessible, if the alignment is satisfactory, and if the valve box or vault, if used, contains debris which would interfere with or delay the operation of the valve. Unsatisfactory conditions encountered must be corrected.

Valve Records. A record must be maintained for locating all pipeline valves and distribution system valves which are needed for safe system operation or may need to be operated under emergency conditions. These records may be maintained on operating maps, separate files, or summary sheets, and must be readily accessible to personnel required to respond to emergencies.

Prevention of Accidental Operation. To prevent accidental operation of any of the valves covered above, certain precautions must be taken. Some recommended actions are as follows:

- Lock valves in above-ground settings readily accessible to the general public, that are not enclosed by a building or fence.
- Lock valves located in vaults, if accessible to the general public.
- Identify the valve by tagging, color coding, or any other suitable means of identification.

DECOMMISSIONING/ABANDONMENT

Guidelines for decommissioning or abandoning gas transmission facilities are given in the ASME B31.8 Code. Pertinent sections are paraphrased here for reference.

Abandoning of Transmission Facilities

Any plan for abandoning transmission facilities must include the following provisions.

- Facilities to be abandoned must be disconnected from all sources and supplies of gas such as other pipelines, mains, crossover piping, meter stations, control lines, and other appurtenances.
- Facilities to be abandoned in place must be purged of gas with an inert material and the ends sealed, except that:
- if precautions are taken to ensure that no liquid hydrocarbons remain in the facilities to be abandoned, the facilities may be purged with air. If the facilities are purged with air, precautions must be taken to ensure that a combustible mixture is not present after purging.

Abandoning of Distribution Facilities

To abandon inactive facilities, such as service lines, mains, control lines, equipment, and appurtenances for which there is no further planned use, the following provisions must be addressed:

- If the facilities are abandoned in place, they must be physically disconnected from the piping system. The open ends of all abandoned facilities must be capped, plugged, or otherwise effectively sealed. The need for purging the abandoned facility to prevent the development of a potential combustion hazard must be considered and appropriate measures taken. Abandonment is not complete unless the volume of gas or liquid hydrocarbons contained within the abandoned section has been determined to pose no potential hazard. Air or inert gas may be used for purging, or the facility may be filled with water or other inert material. If air is used for purging, the facility must be checked to ensure that a combustible mixture is not present after purging. Consideration must also be given to any effects the abandonment may have on an active cathodic protection system and appropriate action taken.

- In cases where a main is abandoned, together with the service lines connected to it, insofar as service lines are concerned, only the customer's end of such service lines need be sealed as stipulated above.
- Service lines abandoned from the active mains should be disconnected as close to the main as practicable.
- All valves left in the abandoned segment should be closed. If the segment is long and there are few line valves, consideration should be given to plugging the segment at intervals.
- All above-grade valves, risers, and vault and valve box covers must be removed. Vault and valve box voids must be filled with suitable compacted backfill material.

Temporarily Disconnected Facilities

Whenever service to a customer is discontinued, one of the following actions must be taken:

- The valve that is closed to prevent the flow of gas to the customer must be provided with a locking device or other means designed to prevent the opening of the valve by unauthorized persons.
- A mechanical service or fitting that will prevent the flow of gas must be installed in the service line or in the meter assembly.
- The customer's piping must be physically disconnected from the gas supply and the open pipe ends sealed.

REFERENCES

1. Gary B. Emerson, ''Relief Valve Sizing, Selection, Installation and Testing,'' *Pipeline Industry*, February 1987, pp. 25–32.
2. Richard C. Berger, ''How Construction Forces Can Control Corrosion,'' *Pipeline & Gas Journal*, February 1984, pp. 29–32.
3. Richard A. Sutton, ''How Columbia Gas Selects Distribution Meters'' *(Part 1), Pipeline Industry*, December 1978, pp. 33–38.
4. Richard A. Sutton, ''How Columbia Gas Selects Distribution Meters'' *(Part 2), Pipeline Industry*, January 1979, pp. 51–53.
5. D.M. Coulter and M.F. Bardon, ''Revised Equation Improves Flowing Gas Temperature Prediction,'' *The Oil and Gas Journal*, February 26, 1979, pp. 107–108.
6. Charles E. Schorre, ''Flow Temperature in a Gas Pipeline,'' *The Oil and Gas Journal*, September 27, 1954, pp. 26–28.
7. Gas Processors Suppliers Association, *Engineering Data Book*, Eleventh Edition, 1998.
8. The American Society of Mechanical Engineers, ASME Code for Pressure Piping, B31, An American National Standard, ''Gas Transmission and Distribution Piping Systems,'' ASME B31.8, 1995 Edition, through 1997 Addenda.
9. C.F. Colebrook, *J. Inst. Civil Engrs.*, London, 11:1333 (1938).

CHAPTER C7
PROCESS PIPING SYSTEMS

Rod T. Mueller, P.E.
Engineering Associate
Exxon Research & Engineering Co.
Florham Park, New Jersey

INTRODUCTION

General Description

Piping is indispensable to petroleum refineries, chemical plants, and other process units. Piping for most process units represents the major item of unit investment. Typical total erected piping cost ranges from 25 to 50 percent of the total cost of a unit. Consequently, the piping engineer often faces the necessity of making careful and realistic compromises between design features and cost without sacrificing minimum safety standards.

This chapter provides a basic guide to the design of *process piping,* with specific emphasis on petroleum refineries, chemical, and other related processing plants. It attempts to provide an overview of the fundamental design principles used by the ASME Pressure Piping Code, Section B31.3, Process Piping. This Code prescribes requirements for materials and components, design, fabrication, assembly, erection, examination, inspection, and testing of piping. References will be made to other chapters within this handbook where more detailed coverage of design analyses and acceptance criteria are provided that relate to the ASME B31.3 Code.[1] This chapter will also provide guidelines for the design and layout of specific systems typically found in petroleum refineries and related petrochemical processing plants.

Prior to the 1976 edition of ANSI B31.3, this Code was titled ''Petroleum Refinery Piping,'' with direct application to the petroleum refinery industry; by inference it also served as the guiding document for the chemical process industry. The Code then expanded its scope to include areas where it previously had been used as reference, and B31.3 was retitled ''Chemical Plant and Petroleum Refinery Piping.'' With its current 1996 edition, the title of B31.3 was revised to ''Process Piping'' to reflect its further expanded scope of including piping typically found in petroleum refineries; in chemical, pharmaceutical, textile, paper, semiconductor, and cryogenic plants; and in related processing plants and terminals. Figure C7.1 provides a schematic diagram illustrating the scope of ASME B31.3 (from the 1996 edition) for

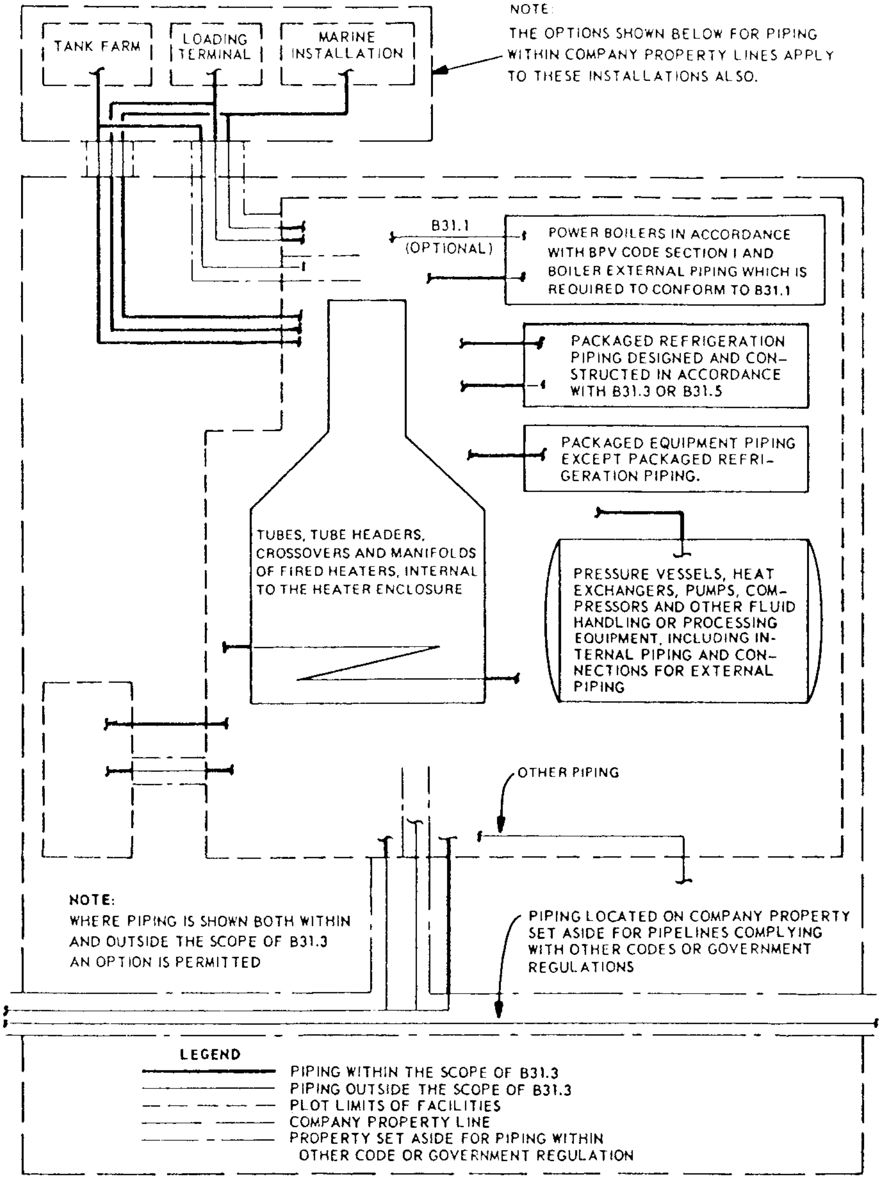
NOTE:
THE OPTIONS SHOWN BELOW FOR PIPING WITHIN COMPANY PROPERTY LINES APPLY TO THESE INSTALLATIONS ALSO.
TANK FARM
LOADING TERMINAL
MARINE INSTALLATION
B31.1 (OPTIONAL)
POWER BOILERS IN ACCORDANCE WITH BPV CODE SECTION I AND BOILER EXTERNAL PIPING WHICH IS REQUIRED TO CONFORM TO B31.1
PACKAGED REFRIGERATION PIPING DESIGNED AND CONSTRUCTED IN ACCORDANCE WITH B31.3 OR B31.5
PACKAGED EQUIPMENT PIPING EXCEPT PACKAGED REFRIGERATION PIPING.
TUBES, TUBE HEADERS, CROSSOVERS AND MANIFOLDS OF FIRED HEATERS, INTERNAL TO THE HEATER ENCLOSURE
PRESSURE VESSELS, HEAT EXCHANGERS, PUMPS, COMPRESSORS AND OTHER FLUID HANDLING OR PROCESSING EQUIPMENT, INCLUDING INTERNAL PIPING AND CONNECTIONS FOR EXTERNAL PIPING
OTHER PIPING
NOTE:
WHERE PIPING IS SHOWN BOTH WITHIN AND OUTSIDE THE SCOPE OF B31.3 AN OPTION IS PERMITTED
PIPING LOCATED ON COMPANY PROPERTY SET ASIDE FOR PIPELINES COMPLYING WITH OTHER CODES OR GOVERNMENT REGULATIONS
LEGEND
PIPING WITHIN THE SCOPE OF B31.3
PIPING OUTSIDE THE SCOPE OF B31.3
PLOT LIMITS OF FACILITIES
COMPANY PROPERTY LINE
PROPERTY SET ASIDE FOR PIPING WITHIN OTHER CODE OR GOVERNMENT REGULATION

FIGURE C7.1 Scope of ASME B31.3 applicability for process piping (1996 edition). (*Reprinted from ASME B31.3 by permission of the American Society of Mechanical Engineers. All rights reserved.*)

process piping of a typical refinery or chemical plant. Included in this scope are piping systems which convey:

1. Petroleum products
2. Raw, intermediate, and finished chemicals
3. Gas, steam, air, and water
4. Fluidized solids
5. Refrigerants
6. Cryogenic fluids

Some fluid services are further categorized by the Code according to the following category services, which need to consider the combination of fluid properties, operating conditions, and other factors which establish the design basis of the piping systems involved:

> ***Category D Fluid Service***—a service in which the fluid handled is nonflammable, nontoxic, and not damaging to human tissue, and the design pressure does not exceed 150 psi (1035 kPa) and the design temperature is between −20 and 366°F (−29 and 186°C). Part 3 (starting with Section 305) of the Piping Code covers specific design and fabrication requirements permitted for piping of Category D fluid services to reflect the less than severe conditions involved for these systems.
>
> ***Category M Fluid Service***—a service in which the potential for personnel exposure is judged to be significant and in which a single exposure to a very small quantity of a toxic fluid, caused by leakage, can produce serious irreversible harm to persons on breathing or bodily contact, even when prompt restorative measures are taken. Chapter VIII (starting with Section M300) of the Piping Code pertains to piping designated by the user as being in Category M fluid service.
>
> ***High-Pressure Fluid Service***—a service in which the user specifies the application of Chapter IX of B31.3 for piping design and construction for fluid services with high design pressures. High pressure is considered by the Code to be pressure in excess of that allowed by the ASME B16.5 Class 2500 rating for the specified design temperature and material group.[2] However, there are no specified pressure limitations for the application of these rules.
>
> ***Normal Fluid Service***—a fluid service pertaining to most piping covered by B31.3, i.e., not subject to the rules for Category D, Category M, or High Pressure Fluid service, and not subject to severe cyclic conditions.

The flow chart given by Fig. C7.2 has been taken from Appendix M of the Piping Code B31.3 to help the user determine the applicability of Category D and Category M Fluid services as distinguished from Normal services (and high-pressure services covered by Chapter IX of the Code).

Types of Systems

As applied to this section, *process piping* refers, except as excluded below, to all piping within the property limits of a chemical or petroleum processing plant installation. In addition to the main process units, this will typically include feed and product loading terminals, fuel oil and gas processing facilities, utility systems, waste and water treatment units, and bulk and atmospheric storage tank farms.

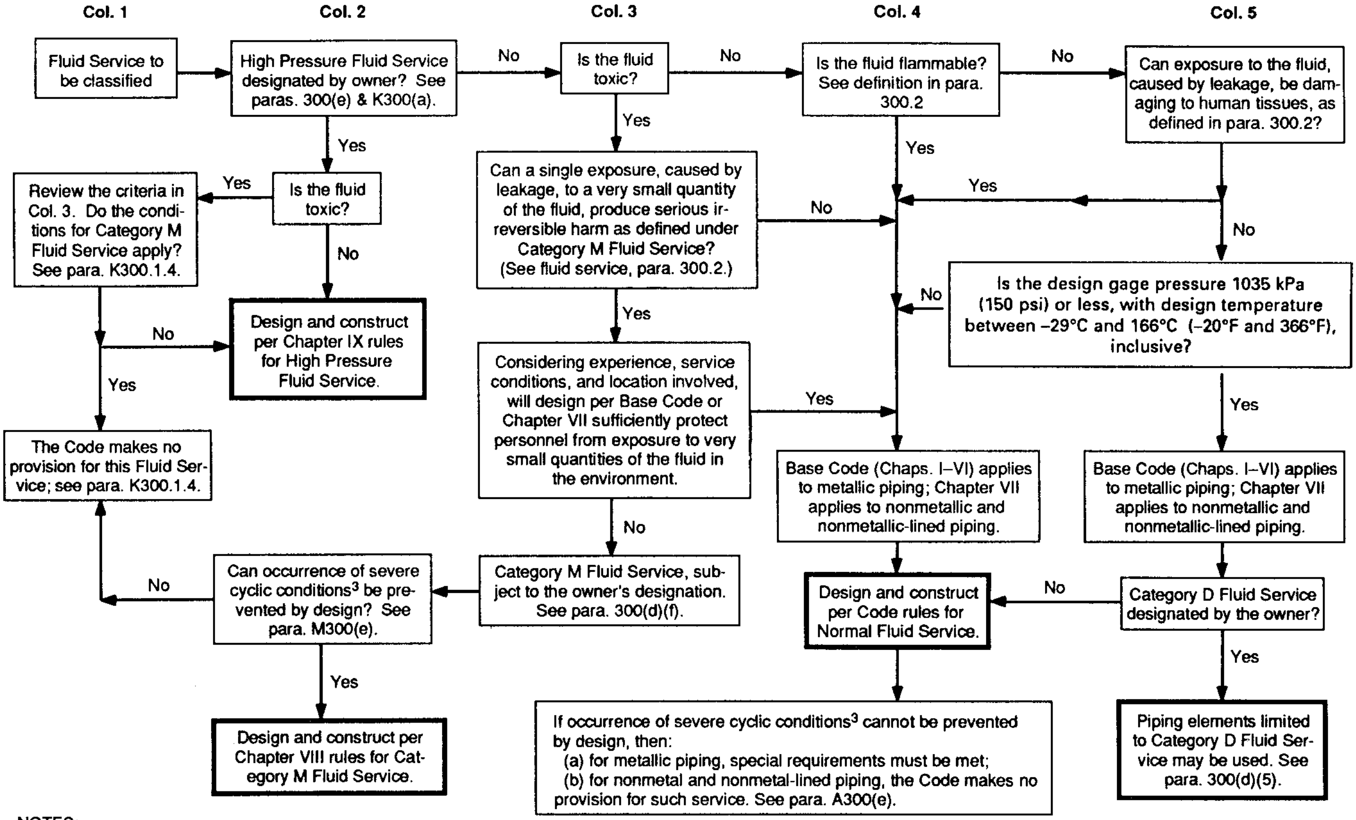
Col. 1
Col. 2
Col. 3
Col. 4
Col. 5
Fluid Service to be classified
High Pressure Fluid Service designated by owner? See paras. 300(e) & K300(a).
No
Is the fluid toxic?
No
Is the fluid flammable? See definition in para. 300.2
No
Can exposure to the fluid, caused by leakage, be damaging to human tissues, as defined in para. 300.2?
Yes
Yes
Yes
Yes
Review the criteria in Col. 3. Do the conditions for Category M Fluid Service apply? See para. K300.1.4.
Is the fluid toxic?
Can a single exposure, caused by leakage, to a very small quantity of the fluid, produce serious irreversible harm as defined under Category M Fluid Service? (See fluid service, para. 300.2.)
No
Yes
No
No
No
Design and construct per Chapter IX rules for High Pressure Fluid Service.
Yes
No
Is the design gage pressure 1035 kPa (150 psi) or less, with design temperature between −29°C and 166°C (−20°F and 366°F), inclusive?
Yes
Considering experience, service conditions, and location involved, will design per Base Code or Chapter VII sufficiently protect personnel from exposure to very small quantities of the fluid in the environment.
Yes
Yes
The Code makes no provision for this Fluid Service; see para. K300.1.4.
Base Code (Chaps. I–VI) applies to metallic piping; Chapter VII applies to nonmetallic and nonmetallic-lined piping.
Base Code (Chaps. I–VI) applies to metallic piping; Chapter VII applies to nonmetallic and nonmetallic-lined piping.
No
Can occurrence of severe cyclic conditions³ be prevented by design? See para. M300(e).
No
Category M Fluid Service, subject to the owner's designation. See para. 300(d)(f).
Design and construct per Code rules for Normal Fluid Service.
No
Category D Fluid Service designated by the owner?
Yes
Yes
Design and construct per Chapter VIII rules for Category M Fluid Service.
If occurrence of severe cyclic conditions³ cannot be prevented by design, then:
(a) for metallic piping, special requirements must be met;
(b) for nonmetal and nonmetal-lined piping, the Code makes no provision for such service. See para. A300(e).
Piping elements limited to Category D Fluid Service may be used. See para. 300(d)(5).

NOTES:

(1) See paras. 300(b)(1), 300(d)(4) and (5), and 300(e) for decisions the owner must make. Other decisions are the designer's responsibility; see para. 300(b)(2).

(2) The term "fluid service" is defined in para. 300.2

(3) Severe cyclic conditions are defined in para. 300.2. Requirements are found in Chapter II, Parts 3 and 4, and in paras. 323.4.2 and 341.4.3.

FIGURE C7.2 Determination of ASME B31.3 category M and D fluid services. (*Reprinted from ASME B31.3 by permission of the American Society of Mechanical Engineers. All rights reserved.*)

This is reflected in the scope of ASME B31.3 provided by Fig. C7.1. It should be noted that this figure was last published in the 1996 edition of the code and subsequently revised in a recent addenda. The earlier diagram as shown, however, provides a better illustration of the applicable process piping systems covered by the B31.3 Code for a typical refinery or chemical plant. Excluded from code jurisdiction are various low-pressure piping systems, plumbing, fired heater piping, and other special applications.

Petroleum Refinery Piping. The wide range of piping typically found in a refinery complex can vary from small-diameter instrument takeoffs to very large-diameter product processing piping, constructed from a number of steel and alloy materials. Operating over a broad range of pressures, principally below 1000 psi (6900 kPa) and at elevated temperatures of up to 1300°F (705°C), most refinery piping is used for conveying hydrocarbons or is in close proximity of hydrocarbon-containing equipment.[3] Consequently, the potential for a fire is ever present. The piping layouts depicted in Fig. C7.3 provide a good example of the complex interconnections involved in a typical refinery.

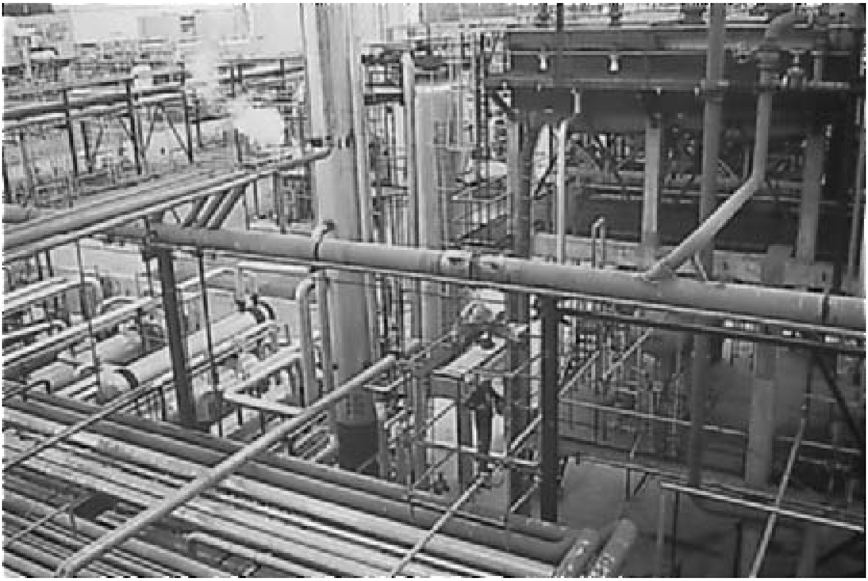

FIGURE C7.3 Typical process plant piping.

Chemical Plant Piping. As compared to refinery systems, typical chemical plant piping applications are usually smaller in size, mostly below NPS 8 (DN 200). Operating pressures for some services can be higher, but temperatures are generally lower and the presence of corrosive fluids is typical. The use of exotic alloy materials, thermoplastics, and thermoset resin materials in piping construction is common because of the highly corrosive nature of some chemicals. Many chemical plant piping systems convey flammable and/or toxic substances.

Other Related Processing Plants. Modern process facilities handle a myriad of chemical substances and compounds at various process temperatures and pressures. The piping systems specified to transport these fluids must be compatible with the intended service conditions. Since most of these facilities are one of a kind, the process piping materials selected for construction will be specific application driven. Today, numerous construction materials are available, both metallic and nonmetallic in nature. Installed cost variations may be as much as tenfold or even more, depending on the materials suitable for the application. Life cycle cost considerations must also be taken into account during the material selection phase to reflect subsequent repair and replacement requirements.

Whereas process piping material selection is specific application driven and will vary dramatically on a case by case basis, utility piping systems are basically the same across various process plants. Basic materials of construction and mode of construction will differ little from one plant to another for services such as air, water, and steam.

Table C7.1 is a hypothetical illustration of services and various piping material classes for a typical process facility. Note the material variations on the process side of the plant, compared to the relatively constant material types in the utility area of the facility.

Most metallic process piping is welded construction, except where flanged disas-

TABLE C7.1 Hypothetical Process Plant X, Y, Z Piping Service Index

Service	ASME Class	Temperature range		Piping material
		°F	°C	
Hydrocarbon processes				
Crude feed/Sour hydrocarbons	150	−20 to 200	−29 to 95	Carbon steel
Fractionation/Light hydrocarbons	150	−20 to 650	−29 to 343	Carbon steel
Catalytic cracking product	150	−20 to 900	−29 to 482	Type 316 SS or low alloy 5 Cr
Catalytic cracking regeneration	150	−20 to 1280	−29 to 693	Refractory lined CS or type 316 SS
Flare header	150	−50 to 750	−45 to 400	Killed carbon steel (low temp grade)
Fuel gas	150	−20 to 500	−29 to 260	Carbon steel
Hydrofiner feed product	300	−20 to 800	−29 to 427	Low alloy (1¼ Cr) or type 316 L SS
Propane	300	−50 to 250	−45 to 120	Killed carbon steel (low temp grade)
Methane feed	300	−20 to 925	−29 to 496	Low alloy (1¼ Cr)
Catalytic reformer/Hydrogen	600	−20 to 1100	−29 to 595	Low-alloy (1¼ or 2¼ Cr)
Ethane	600	−300 to 500	−184 to 260	Type 304L SS
Hot oil heating	600	−20 to 750	−29 to 399	Type 304 SS
Hydrocracker/Hydrocarbon	1500	−20 to 850	−29 to 454	Low alloy (1¼ Cr to 2¼ Cr)
Other Systems				
Acetic acid	150	−50 to 160	−45 to 70	Type 304 stainless steel
Caustic (15% by weight)	150	−20 to 150	−29 to 65	Monel
Chloride/Chlorine (Dry)	150	−20 to 125	−29 to 50	Carbon steel
Hydrochloric acid	150	−50 to 150	−45 to 65	Hastelloy
Liquid sulfur	150	−20 to 500	−29 to 260	Carbon steel jacketed or traced pipe
Hydrocarbons/Wet chlorine	300	−20 to 500	−29 to 260	Inconel or plastic-lined steel
Utilities				
Instrument air	150	−20 to 150	−29 to 65	Carbon steel galvanized/ SS tubing
Nitrogen/Utility air	150	−20 to 300	−29 to 149	Carbon steel
Potable water	150	−20 to 120	−29 to 50	Carbon steel—galvanized
Firewater	150	−20 to 500	−29 to 260	Carbon steel
Low-pressure steam/ condensate	150	−20 to 500	−29 to 260	Carbon steel
Boiler feed water	300	−20 to 500	−29 to 260	Carbon steel
High-pressure steam	600	−20 to 750	−29 to 399	Carbon steel

sembly is required, typically at equipment and valve connections. Due to the high value added cost of the process fluid and its potential for damage to personnel or the environment upon release, integrally welded joints for all size ranges are common.

Energy costs have made integrally welded joints for steam and other utility services more attractive when evaluated against conventional threaded joints and their potential for leakage. Threaded joint construction is still used for low-severity service, but it is typically limited to NPS 2 (DN 50) and smaller sizes, and to services that offer little or no threat to personnel safety or environmental harm.

REFERENCE CODES AND STANDARDS

Code application, jurisdiction, and specific scopes are covered in detail in Chap. A4, ‘‘Piping Codes and Standards,’’ in this handbook. This chapter closely parallels the requirements as outlined in ASME B31.3, ‘‘Process Piping,’’ 1996 Edition. Codes and standards referenced in this chapter are provided by Table C7.2. Refer to App. E10 for international codes and standards.

DESIGN CONDITIONS

The definitions in this section have been extracted from Process Piping Code, ASME B31.3.

Design Pressure

The design pressure of each component in a piping system shall not be less than the pressure at the most severe condition of coincident internal or external pressure and temperature (minimum or maximum) expected during service. The most severe condition of coincident pressure and temperature is that which results in the greatest required pipe thickness and the highest flange rating. When more than one set of pressure-temperature conditions exist for a piping system, the conditions governing the rating of components conforming to applicable standards may differ from the conditions governing the rating of components in accordance with ASME Code B31.3 pressure design criteria.

Design Temperature

The design temperature is the temperature at which, under coincident pressure, the greatest wall thickness or highest component ratings is required as explained above and shall be determined as follows:

1. *For fluid temperatures below 150°F (65°C),* the metal temperature shall be taken as the fluid temperature unless solar radiation or other effects result in a higher temperature.
2. *For fluid temperatures 150°F (65°C) and above,* the metal temperature for uninsulated components shall be no less than the following values, unless a lower average wall temperature is determined by test or heat transfer calculations:

TABLE C7.2 Referenced Codes and Standards

ASME Pressure Piping Code	
B31.1	Power Piping
B31.3	Process Piping
ASME Boiler and Pressure Vessel Code	
Section II	Materials, Part D
Section VIII	Boiler & Pressure Vessel Code—Pressure Vessels, Division 1
Section IX	Welding and Brazing Qualifications
ASME Standards	
B1.20.1	Pipe Threads, General Purpose (Inch)
B16.1	Cast Iron Pipe Flanges and Flanged Fittings
B16.3	Malleable-Iron Threaded Fittings, Class 150 and 300
B16.5	Pipe Flanges and Flanged Fittings
B16.9	Factory-Made Wrought Steel Butt-welding Fittings
B16.10	Face-to-Face and End-to-End Dimension of Ferrous Valves
B16.11	Forged Fittings, Socket-Welding and Threaded
B16.20	Metallic Gaskets for Pipe Flanges-Ring-Joint, Spiral-Wound, and Jacketed
B16.21	Nonmetallic Flat Gaskets for Pipe Flanges
B16.24	Bronze Pipe Flanges and Flanged Fittings, Class 150 and 300
B16.25	Butt Welding Ends
B16.28	Wrought Steel Buttwelding Short Radius Elbows and Returns
B16.34	Valves—Flanged, Threaded, and Welding End
B16.36	Steel Orifice Flanges, Class 300, 600, 900, 1500 and 2500
B16.39	Malleable Iron Threaded Pipe Unions, Class 150, 250 and 300
B16.42	Ductile Iron Threaded Pipe Unions
B16.47	Large Diameter Steel Flanges, NPS 26 Through NPS 60
B16.48	Steel Line Blanks
B36.10M	Welded and Seamless Wrought Steel Pipe
B36.19	Stainless Steel Pipe
ANSI/AWWA Standards	
C110	Ductile Iron and Gray Iron Fittings, 3 in. Through 48 in. for Water and Other Liquids
C111	Rubber Gasket Joints for Cast-Iron and Ductile-Iron Pressure Pipe and Fittings
C115	Flanged Cast-Iron and Ductile-Iron Pipe with Threaded Flanges
C151	Ductile Iron Pipe, Centrifugally Cast in Metal Molds or Sand-Lined Molds, for Water or Other Liquids
C504	Rubber Seated Butterfly Valves
API Standards	
594	Wafer and Wafer-Lug Check Valves
599	Steel and Ductile Iron Plug Valves
600	Steel Gate Valves—Flanged and Butt-welding Ends, Bolted and Pressure Seal Bonnets
602	Compact Steel Gate Valves—Flanged, Threaded, Welding, and Extended-Body Ends
603	Class 150, Cast, Corrosion-Resistant, Flanged-End Gate Valves
608	Metal Ball Valves, Flanged, Threaded, and Welding End
609	Butterfly Valves, Lug-Type and Wafer-Type Valves
610	Centrifugal Pumps for Petroleum, Heavy Duty Chemical, and Gas Industry Service
611	General-Purpose Steam Turbines for Refinery Service

TABLE C7.2 Referenced Codes and Standards (*Continued*)

API Standards (Continued)	
617	Centrifugal Compressors for Petroleum, Chemical, and Gas Industry Services
618	Reciprocating Compressors for Petroleum, Chemical, and Gas Industry Services
650	Atmospheric Storage Tanks
660	Shell and Tube Heat Exchangers for General Refinery Service
661	Air-cooled Heal Exchangers for General Refinery Service
674	Positive Displacement Pumps
RP 686	Recommended Practice for Machinery Installation and Installation Design
API Specification	
5L	Specification for Line Pipe
ASTM Standards and Specifications$^{(1)}$	
A53	Pipe, Steel, Black and Hot-Dipped, Zinc-Coated Welded and Seamless
A106	Seamless Carbon Steel Pipe for High-Temperature Service
A193/A193M	Alloy-Steel and Stainless Steel Bolting Materials for High-Temperature Service
A312/A312M	Seamless and Welded Austenitic Stainless Steel Pipe
A320/A320M	Alloy Steel Bolting Materials for Low-Temperature Service
A333/A333M	Seamless and Welded Steel Pipe for Low-Temperature Service
A335/A335M	Seamless Ferritic Alloy-Steel Pipe for High-Temperature Service
A358/A358M	Electric-Fusion Welded Austenitic Chromium-Nickel Alloy Pipe for High-Temperature Service
A426	Centrifugally Cast Ferritic Alloy Steel Pipe for High-Temperature Service
A451	Centrifugally Cast Austenitic Steel Pipe for High-Temperature Service
A494/A494M	Castings, Nickel and Nickel-Alloy
A671	Electric-Fusion-Welded Steel Pipe for Atmospheric and Lower Temperatures
A672	Electric-Fusion-Welded Steel Pipe for High-Pressure Services at Moderate Temperatures
A691	Carbon and Alloy Steel Pipe, Electric-Fusion Welded for High-Pressure Service at High Temperatures
B165	Nickel-Copper Alloy (UNS N04400) Seamless Pipe and Tube
B167	Nickel-Chromium-Iron Alloy (UNS N06600) Seamless Pipe and Tube
B241/B241M	Aluminum and Aluminum-Alloy Seamless Pipe and Seamless Extruded Tube
B407	Nickel-Iron-Chromium Alloy Seamless Pipe and Tube
B423	Nickel-Iron-Chromium-Molybdenum-Cooper Alloy (UNS N08825 and N08221) Seamless Pipe and Tube
B705	Nickel-Alloy (UNS N06225 and N08825) Welded Pipe
F436/F436M	Hardened Steel Washers
MSS Standards	
SP44	Steel Pipe Flanges
SP-45	Bypass and Drain Connections
Pipe Fabrication Institute (PFI) Specification	
ES-5	Cleaning of Fabricated Piping
ES-7	Minimum Length and Spacing of Welded Nozzles
ES-24	Pipe Bending Methods, Tolerances, Process and Material Requirements

Note: (1) Refer to Appendix A and Table 326.1 of ASME B31.3 for a more complete listing of ASTM Standard and Specifications.

- Threaded and welding end valves, pipe, welding fittings, and other components having wall thickness comparable to that of pipe: 95 percent of the fluid temperature
- Flanged valves, flanged fittings, and flanges (except lap joints): 90 percent of the fluid temperature
- Lap joint flanges: 85 percent of the fluid temperature
- Bolting: 80 percent of the fluid temperature

3. *Externally insulated piping:* The fluid temperature shall be used unless calculations, previous tests, or service experience based on measurements support the use of other temperatures. Where piping is heated by heat tracing or jacketing, the effect of such heating or cooling shall be incorporated in the establishment of the design temperature.
4. *Internally insulated piping:* The design metal temperature shall be based on heat transfer calculations or tests.

Design Minimum Temperature

The design minimum temperature is the lowest component temperature expected in service. This temperature may establish special design requirements and material qualification requirements, as required for low-temperature toughness testing of metals per Para. 323.2.2 of ASME B31.3.

Cooling Effects on Pressure

The cooling of a gas or vapor in a piping component may reduce the pressure sufficiently to create an internal vacuum. In such a case, the piping component must be capable of withstanding the external pressure at the lower temperature, or provisions must be made to break the vacuum.

Ambient Effects

Consideration needs to be given to low ambient temperature conditions for displacement stress analysis, and for possibly setting the design minimum temperature just discussed. Where the design minimum temperature of a piping system is below 32°F (0°C), the possibility of moisture condensation and buildup of ice shall be considered and provisions made in the design to avoid resultant malfunctions. This applies to surfaces of moving parts of shutoff valves, control valves, pressure-relief devices including discharge piping, and other components.

DESIGN LOADING CONSIDERATIONS

This section will discuss some of the more common loading conditions which need to be considered in the design of a piping system.

Imposed Pressure Including Transient Effects

In determining the system design pressure, it is important to consider the maximum differential operating pressure that can exist between the interior and exterior portions of the system. This needs to reflect the full range of anticipated operating conditions imposed of the system, including normal operation, startup, and shutdown conditions. All pressure sources need to be considered in determining the governing design pressure, including the following effects additive to the maximum operating pressure:

- Hydrostatic head effects due to differences in elevation between high and low points in the system
- Friction losses and back-pressure effects
- Pump shutoff heads
- Variations in system controls and other operating pressure surges

It is realistic to expect that short-duration transient system pressure excursions will occur during normal system operation. Provisions of ASME B31.3 allow for some acceptable level of overpressure transients for metallic and not brittle materials provided that the amount of time that the transient condition occurs does not exceed a specified percentage of the total system operating time per the following:

1. When the increased operating condition will not exceed 10 hours at any one time, or 100 hours per year, it is permissible to increase the pressure rating or the allowable stress for pressure design at the temperature existing during the increased operating condition by a maximum of 33 percent.
2. When the increased operating condition will not exceed 50 hours at any one time, or 500 hours per year, it is permissible to increase the pressure rating or the allowable stress for pressure design at the temperature existing during the increased operating condition by a maximum of 20 percent.

Some of the conditions which should be investigated for the short time period are the centrifugal pump shutoff pressure, or the pressure at the maximum point of the pump characteristic curve, centrifugal compressor surge-point pressure, stalling pressure of reciprocating pumps and reciprocating compressors, and the set pressure of relief valves which limit pressure in the piping.

Fluid Expansion Effects

The Code states that provision shall be made in the piping design either to withstand or to relieve increased pressure caused by the heating of static fluid in a piping component. Most operators, however, have found it unnecessary to provide a relief valve on piping components which may be blocked in. The reason for this is that leaks through valve seating surfaces relieve the pressure before it becomes excessive as the result of the heating of the blocked-in fluid. Valves utilizing resilient seating materials have made this more of a problem, however, because of their ability to seal even more tightly as the pressure increases. Consequently, when such valves are used, greater consideration should be given to the problem of possible pressure buildup in the valve body cavity. A similar problem can be created in a blocked-in section of process piping by the increase in pressure which can result from the evolution of gas caused either by an increase in fluid temperature or by a chemical reaction (e.g., hydrogen release as a product of corrosion).

Weight Effects

In the design of piping and its supports, it is required that live loads, dead loads, and loads and forces from other causes be taken into account. *Live load,* as used here, is taken as the weight of fluid transported plus snow and ice loads in localities where such conditions exist. *Dead load* is the weight of the piping components and insulation and other superimposed permanent loads. Reference is made to Chap. B2 of this handbook for more details in considering weight effects.

Other Mechanical Loads

The pipe wall must be sufficiently thick to prevent overstress, damage, collapse, or buckling due to superimposed loads from supports, ice formation, backfill, and other causes. In those cases where it is impractical to increase the thickness or if a thickness increase would cause excessive local stresses, the factors that would contribute to the damage of the piping are required to be corrected by other design methods. Examples of these considerations would be pipelines that run under railroad tracks or roadways, where steel pipe sleeves may be required to preclude excessive local bearing stresses being imposed on the pipe wall.

Dynamic Effects

The Code requires that the piping designer take into account wind and earthquake forces, although not concurrently, in design of his piping. It also requires that the designer consider impact forces (including hydraulic shock) and vibration. Vibration and impact forces create complex design problems. This is especially true in the case of vibration because difficult-to-detect low-amplitude high-frequency vibrations often produce the most dangerous stresses. Refer to Chap. B4 of this handbook for stress analysis of piping systems.

Most piping systems will vibrate to some extent. Vibration in piping may be generated by the following exciting forces:

1. Mechanical vibration of connected equipment, such as compressors, pumps, and vessels.[4]
2. Wind-produced vortices that form alternately on opposite sides of cylindrical surfaces.
3. Internal pulsations in flowing fluids, such as those set up by reciprocating pumps and compressors. Vibration from this latter cause can generally be kept within controllable limits by limiting pressure pulsations to 1 to 3 percent of line pressure.
4. Hydraulic transient effects, such as those caused by water hammer impact effects and relief valve discharge. Of all the loading conditions that a piping system may experience in service, hydraulic transients are among the most damaging. Typical damage could be the failure of pipe supports, restraints, and/or supporting structures. Breaches of pressure integrity can also be experienced, especially where large-diameter thin-walled piping is involved.

Where vibration is expected, good design should include the following:

- Adequate foundations, especially for reciprocating pumps and compressors.
- Strategic location of pipe guides and supports to reduce vibration. They should be installed so as to cause minimum restraint to normal thermal movements. The use of sway braces of the energy-absorbing or instant-counterforce-acting type is recommended for control of undesirable pipeline movement. Rigid braces are also effective in controlling movement, provided their restraining effect is taken into account in the piping flexibility design. Where pulsating flow exists, piping should be supported at all changes in direction, and cantilever sections should be avoided.
- Avoidance of small branch connections. Additional supports, such as gusset plates, to stiffen piping may help reduce certain vibration problems.
- An acoustical study to determine whether dampening equipment is needed. Failure can be caused by resonance of some part of the system with the pulsation frequency. Pressure pulsations can be minimized by the use of hydra-pneumatic accumulators, snubbers, or surge drums. These pulsation-reducing devices should be installed as close as possible to the pulsation-producing equipment.
- Any sudden change in the flow velocity or pressure in a liquid line will produce hydraulic shock (water hammer). Typical water hammer problems can be attributed to the rapid closure of a valve that results in hydraulic shock waves in the piping system upstream of the valve.

Water hammer requires careful consideration because it can damage equipment associated with piping and instrumentation even though the permissible pressures for piping components may not be exceeded. In addition to the utilization of slow-closing valves, the installation of surge tanks, pneumatic chambers, spring-operated relief valves, or shock absorbers are sometimes used to help control this phenomenon. Refer to Chap. B8 of this handbook for more details in dealing with this type of dynamic loading.

Another particular type of flow-induced pulsation warranting specific attention is associated with gaseous-flow pressure regulators and flow control valves.[5] These may produce high acoustic energies associated with both turbulence and flow separation. When operating with a severe pressure drop, such valves have high flow velocities that generate significant turbulence. This acoustic energy can couple with the acoustic and natural frequencies of the system to create severe vibration problems. Experience in the gas, petrochemical, power generation, and aerospace industries has shown that high-capacity pressure-reducing systems are prone to severe vibrations, which have caused piping fatigue failures in as short a period as 12 hours after initial commissioning of the system. Piping systems of particular concern include high capacity {>200,000 lb/hr (91,000 kg/hr) flow rate} and/or high pressure drop (>3.0 upstream to downstream pressure ratio) systems. Reference No. 5 provides more details on this type of vibration and considerations for mitigation, which is limited to low-noise-producing valve designs to avoid excessive acoustic energy generation.

Thermal Expansion and Contraction Effects

The following thermal effects, combined with loads and forces from other causes, need to be taken into account in the design of piping:

Thermal loads due to restraints. These loads consist of thrusts and moments that arise when free thermal expansion and contraction of the piping are prevented by restraints or anchors, including connections to fixed equipment.

Loads due to temperature gradients. These loads arise from stresses in pipe walls resulting from large rapid temperature changes or from unequal temperature distribution as may result from a high heat flux through a comparatively thick pipe or stratified two-phase flow causing bowing of the line.

Loads due to differences in expansion characteristics. These loads result from differences in thermal expansion where materials with different thermal expansion coefficients are combined, as in bimetallic, lined, or jacketed piping, or with metallic-nonmetallic composite piping systems.

Corrosion and Erosion Allowances

A commonly used nominal value for corrosion allowance is 1⁄16 in (1.5 mm) for carbon steel and low-alloy steel piping in hydrocarbon service. Larger corrosion allowances [typically up to 1⁄4 in (6 mm)] for these materials may be required to allow for severe corrosion and/or erosion anticipated for the fluid service involved. Higher-alloy materials, including austenitic steels, are typically required for very corrosive service environment. The allowance for corrosion or erosion should be considered for all surfaces exposed to the process fluid. Determinations for recommended corrosion/erosion allowances are typically based on corrosion monitoring techniques and representative process experience. In addition, the possibility of external corrosion should be considered for piping systems located in aggressive environments such as at marine terminals off coastal waters.

Threading and Grooving Allowances

Calculations for the thickness of piping components which are to be threaded or grooved are required to include a dimensional allowance equal to the depth of the cut plus the required tolerance. For threaded components, the nominal thread depth (dimension *h* of ASME B1.20.1, or equivalent) should apply.[6] For machined surfaces or grooves where the tolerance is not specified, the tolerance is taken as 0.02 in (0.5 mm) plus the depth of cut. Threading and grooving allowances, weld joint factors, and other mechanical strength factors shall be as required by the applicable Code.

Allowable Stresses

Allowable stress values (S) are provided by Table A-1, and Table A-2 for bolting, of the Process Piping Code ASME B31.3, which are used in principal design calculations within this Code. The stress values in these tables are basic allowable stresses in tension which are grouped by material specifications and product forms, and are for stated temperatures up to specified maximum limits. Design equations within the code often stipulate the product of S and E, where:

$S = \text{Material allowable stress}$

$E = \text{Quality factor}$

The factor E (formerly defined by the code as *joint efficiency factor*) represents one of the following quality factors:

- Casting quality factor E_c is provided by Table A-1A of the Code based on the listed material specification and the type of casting inspection examinations. The code also describes various supplementary inspections which permit the allowable stresses and casting quality factors to be increased. The casting quality factors, however, do not apply to valves, flanges, and fittings that conform to the standards listed in Table 326.1 of the code.
- Weld joint quality factors E_j is tabulated in Table A-1B of the Code for straight or spiral welded joints for pressure-containing components. This is further defined by Table 302.3.4 of the Code. As in the case of casting quality factors, the Code allows for increased joint quality factors for certain kinds of welds if additional examination is performed beyond that required by the product specification.

If a component is made of castings joined by longitudinal welds, both a casting and a weld joint quality factor applies to reduce the material allowable stress in accordance with the Code.

The bases for establishing the basic allowable stress values for ferrous, nonferrous, and nonmetallic materials are described in the Code. The Code user will need to refer to this only in those cases where he or she desires to establish allowable stresses for an unlisted material.

The allowable stress values in shear and bearing are 0.80 and 1.60, respectively, times the values contained in the Code.

For other than normal operations, the allowable adjustments in pressure-temperature ratings as just set forth are applicable to allowable stress values in calculations concerning components, such as pipe, which do not have established pressure-temperature ratings.

The designer should remember that a more severe operating condition may be caused by increased contents load than by increased temperature or pressure. For example, a pipeline may have been designed for gaseous service. Subsequent process changes required the pipeline to see liquid service at nominally the same pressure and temperature as the previous gas service. The basic pipe spans would need to be reevaluated due to the increase in the dead-weight bending loads caused by the added weight of the liquid contents.

Limits on Calculated Stresses Due to Sustained Loads and Thermal Expansion

This subject is covered in detail in Chap. B4 of this handbook. Design considerations in the application of these criteria to process system piping will be covered in subsequent sections of this chapter.

Pressure-Temperature Ratings for Piping Components

Pressure-temperature ratings have been established for certain piping components. Those that have been accepted by ASME B31.3 are maintained in the standards listed in Table 326.1 of this Code. These established ratings should not be exceeded by the expected normal operating conditions. However, during shutdown, startup, or an interruption in the normal operation of a process unit, conditions more severe than normal may be characteristic of a service. Depending on the frequency and duration of these more severe conditions, the Code permits adjustment of the pressure ratings as previously discussed on transient pressure effects. Extrapolation of accepted pressure-temperature ratings is permitted when these ratings do not extend to the upper material temperature limits allowed by the code, provided this is done in accordance with the applicable rules of the standard involved.

PRESSURE DESIGN OF PIPING COMPONENTS

Straight Pipe

The equations given in the Code consider pressure, mechanical, corrosion, and erosion allowances. In addition to these factors, the Code requires that all designs (not only those for straight pipe) be checked for adequacy of mechanical strength under the applicable loadings discussed previously. The Code gives equations for determining the thickness of straight pipe for the outside diameter/thickness ratios D_o/t greater than 6. The pressure design of piping having a diameter/thickness ratio of 6 or less requires special considerations which encompass design and material factors, such as theory of failure, fatigue, and thermal stress. These considerations are addressed in Chap. IX of the Code for High Pressure Piping. Refer to Chap. B2 of this handbook for the calculation of the required minimum wall thickness of the pipe.

Piping lengths subjected to external pressures will also need to be sufficiently stiff to resist buckling. The Piping Code refers to the procedures of the ASME Boiler and Pressure Vessel (BPV) Code, Section VIII, Div. 1, for piping subjected to external pressure, which should be specifically reviewed in case of relatively large-diameter and thin-walled piping systems.[7] This may require the addition of external stiffening rings or thicker pipe walls to resist buckling. Refer to Chap. B2 of this handbook for calculating pipe wall thickness when piping is subjected to external pressure.

Bends and Elbows

The minimum required wall thickness at a pipe bend after bending should be determined as for straight pipe, provided the bending operation does not produce a difference between the maximum and minimum diameters greater than 8 percent for internal pressure service and 3 percent for external pressure. The centerline radius of pipe bends should typically be a minimum of 3 times the nominal pipe diameter. Smaller radius bends as tight as 1½ *D* are possible, such as that obtained with induction bending methods with appropriate heat treatment. Specific manufacturing experience and process procedures in these circumstances should be reviewed by the process plant owner in assessing cost incentives over more conventional pipe bends or elbows.

Elbows that are manufactured in accordance with any of the standards listed in Table 326.1 of the ASME B31.3 Code are considered to be suitable for use at the pressure-temperature rating specified in the listed standard. In the case of standards under which elbows are made to a nominal pipe thickness, such as ASME B16.9, the elbows are considered suitable for use with pipe of the same nominal thickness.[8]

Miters

The thickness of each segment of a miter must be designed in the same manner as straight pipe. The thickness, however, does not allow for the discontinuity stresses that exist at junctions between the segments of a miter. These stresses are reduced for a given miter as the number of segments is increased. An angular offset of 3° or less does not require design considerations as a miter bend, and the same design basis applies as is used for straight pipe. The Code requires multiple miter bends with miter angle cuts not greater than 22.5°, which requires a minimum of 2 miter cuts to achieve a short-pattern full 90° bend. Single miter bends are allowed with a miter cut angle greater than 22.5°, but different design rules apply. Miters in process plants are typically limited to relatively large diameter and low-pressure [50 psig (345 kPa) or less] piping systems, especially where elbow fittings are not readily available. Even for these services, 90° miter bends should have three or more segments. Refer to Fig. C7.4.

The wall thickness of mitered segments of pipe subjected to external pressure must be designed in the same manner as required for straight pipe.

Branch Connections

Branch connections may be made by the use of integrally reinforced fittings (e.g., tees, extruded outlets, branch outlet fittings, laterals, and crosses), welding outlet fittings or by welding the branch pipe directly to the run pipe, with or without added reinforcement as covered by the Code. The Code gives rules governing the design of pipe-to-pipe branch connections to sustain internal and external pressure in those cases where the angle between the axis of the branch and of the run is between 45° and 90°. Branch connections in which the smaller angle between the axis of the branch and the run is less than 45° impose special design and fabrication problems. The rules given in the Code for angles between 45° to 90° may be used as a guide, but sufficient additional strength must be provided to ensure safe and satisfactory service, and the design must be substantiated by the provisions of the Code for nonstandard piping components.

Branches at angles other than 90°, such as laterals, should be avoided except when flow and pressure drop considerations greatly outweigh the difficulty in obtaining satisfactory welds and the greater difficulty in adequately reinforcing such connections.

For welded pipe-to-pipe branch connections, the stress concentration at the junction increases rapidly as the size of the branch approaches the size of the run. This is also true with most welding outlet fittings. Consequently in services which involve considerable cycling due to pressure or temperature or both, it is usually good practice to make the branch connections with butt-welding tee fittings, or socket-welding fittings in the case of small-diameter piping. The use of butt-welding tees is also considered good practice for full-sized branches in most process services. If there is at least one size reduction in the branch, fabricated pipe-to-pipe branch connections should, as a rule, be acceptable for all services except those with severe cycling. The use of reinforcing pads for fabricated branch connections should also be avoided for elevated temperature services greater than 800°F (426°C) due to concerns for high differential thermal expansion strains.

Strength of Branch Connections. The opening made in a pipe for a branch connection weakens the pipe, and unless the wall thickness of the pipe is sufficiently in

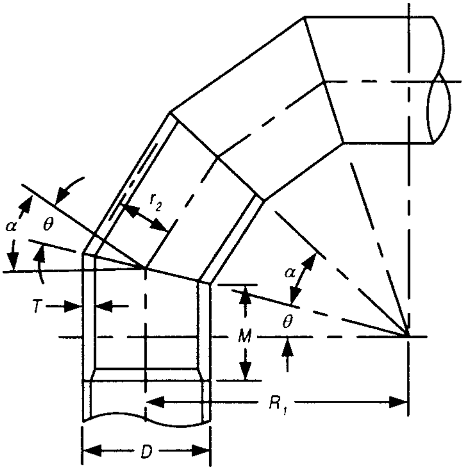

Where:

D = outside diameter of pipe

r_2 = mean radius of pipe using nominal wall T

T = miter pipe wall thickness (measured or minimum per purchase specification)

C = sum of mechanical and corrosion/erosion allowances

θ = angle of miter cut

α = angle of change in direction at miter joint = 2θ

R_1 = effective radius of miter bend, defined as the shortest distance from the pipe center line to the intersection of the planes of adjacent miter joints

The ASME piping Code, B31.3, requires that the value of R_1 shall not be less than:

$$R_1 \geq \frac{A}{\tan\theta} + \frac{D}{2}$$

Where:

A = an empirical value defined by Section 304.2.3 of this code.

FIGURE C7.4 Nomenclature for miter bends.

excess of that required to sustain the pressure, it may be necessary to provide reinforcement. Typical welded branch connections permitted by the Code are illustrated in Fig. C7.5 shown with and without added reinforcement. The amounts of reinforcement required to sustain the pressure in welded pipe-to-pipe branches are outlined in Sec. 304.3 of ASME B31.3. Certain branch connections may be made without the necessity of their use being supported by engineering calculations. This includes, for example, branch connections made by welding a threaded or socket welding coupling or half-coupling directly to the pipe run, provided the size of the

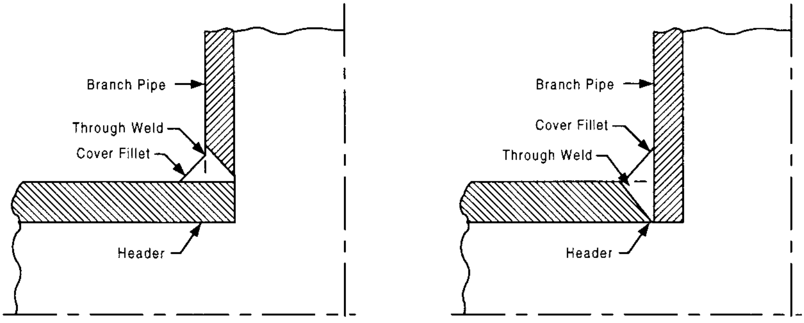
Branch Pipe
Through Weld
Cover Fillet
Header
Branch Pipe
Cover Fillet
Through Weld
Header

(a) Set-on

(b) Set-through

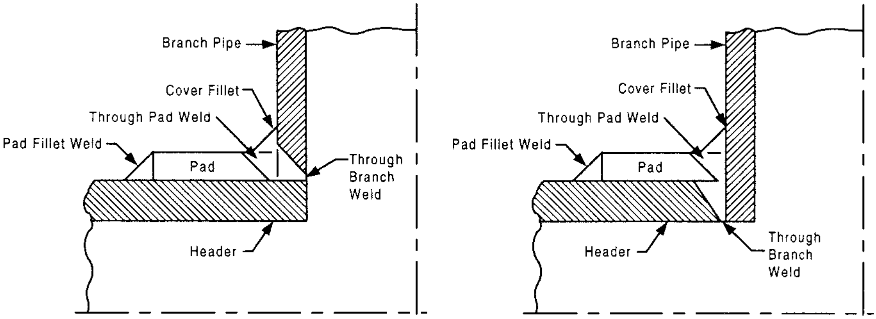
Branch Pipe
Cover Fillet
Through Pad Weld
Pad Fillet Weld
Pad
Through Branch Weld
Header
Branch Pipe
Cover Fillet
Through Pad Weld
Pad Fillet Weld
Pad
Header
Through Branch Weld

(c) Set-on with Reinforcing Pad

(d) Set-through with Reinforcing Pad

FIGURE C7.5 Fabricated branch connections.

branch does not exceed NPS 2 (DN 50), and the coupling has a minimum rating of Class 2000 per ASME B16.11.[9]

Other Design Considerations for Branch Connections. In addition to pressure loadings, external forces and movements are applied to a branch connection by thermal expansion and contraction, dead and live loads, and movement of piping terminals and supports. Due consideration must be given to the design of a branch connection to withstand these forces and movements. Fabricated branch connections made by welding the branch pipe directly to the run pipe also should be avoided when the branch size exceeds 0.8 times the run size or where repetitive stresses may be imposed on the connection by vibration, pulsating pressure, temperature cycles, and so forth. In such cases, it is recommended that the design be conservative and that considerations be given to the use of tee fittings or complete encirclement types of reinforcement.

Closures

The design of welded flat closures, ellipsoidal, spherically dished, hemispherical, and conical closures is encountered relatively infrequently. Closure fittings manufactured in accordance with ASME B16.9 and B16.11 are considered suitable for use at the pressure-temperature ratings specified by such standards. In the case of standards under which closure fittings are made to nominal pipe thickness, the closure fittings shall be considered suitable for use with pipe of the same nominal thickness. In process plant piping the most commonly used closure is probably the butt-welding cap. Bolted flanged covers are used where access is needed.

Openings in Closures. Code rules govern the design of openings in closures when the size of the opening is not greater than one-half of the inside diameter of the closure. The basis for the design of these openings in closures is the same as it is for branch connections. Closures with larger openings must be designed as reducers, except that flat closures must be designed as flanges.

Reducers

Reducers, either concentric or eccentric, are typically provided as forged or wrought fittings in accordance with an accepted standard (e.g., ASME B16.9 in the case of wrought steel butt welding fittings). Concentric reducers are typically made in conical or reversed curve sections, or a combination of such sections, and the design requirements of the Code for conical and toriconical closures apply.

Flanges

Flanges manufactured in accordance with ASME Standards B16.5, B16.36, B16.1, B16.24, B16.42, and B16.47 are considered suitable for use at the pressure-temperature ratings specified by such standards. Flanges not made in accordance with the standards listed shall be designed in accordance with Sec. VIII Div. 1 of the ASME Boiler and Pressure Vessel Code, except that the requirements for fabrication, assembly, inspection, and testing, and the pressure and temperature limits for materials of ASME B31.3 shall govern. ASME Section VIII, Division 1, design requirements with allowable stresses from B31.3 are also referenced for the design of blind flanges.

Blanks

The Piping Code provides design bases for determining the minimum pressure design thickness for permanent blanks, which are used to isolate or dead-end piping systems. Corrosion or erosion allowances and manufacturer's minus tolerance must be added to the thickness thus determined. Standard dimensions for permanent blanks and figure 8 blinds are provided by ASME B16.48 (formerly covered by API 590), Steel Line Blanks, which are typically used for most process refinery applications.[10]

In the design of temporary blanks which are not to be used during operation of the piping (e.g., during shutdowns or during testing), an allowable stress equal to 90 percent of the material's yield strength is sometimes used. It is suggested, however, that ¼ in (6.0 mm) is a practical minimum thickness for carbon-steel blanks.

Expansion Joints

Thermal expansion of piping systems within process plants is normally accommodated with the inherent flexibility achieved with elbows, bends, and pipe expansion loops. There are some special cases, however, where the layout requirements of the piping require the use of expansion joints. This may be the case, for example, if the system cannot tolerate appreciable pressure losses with the addition of elbows or bends. Instead, system thermal expansion or contraction requirements can be accommodated using a suitably designed expansion joint. Since expansion joints are comparably more vulnerable to potential damage and fatigue failures, they should only be considered after all other normal flexibility alternatives have been explored.

Several different types of expansion joints are available, ranging from rubber hose to metal bellows, which are covered in Chap. A2 of this handbook. If used in process plants, expansion joints are typically the metal bellows type, using U-shaped convolutions. The design of metal bellows type expansion joints is covered by App. X of the Process Piping Code, ASME B31.3. In addition to the pressure and thermal expansion design of the bellows, it is important to ensure that piping movements and external bending loads will not be beyond the limits of the joint design. Potential problems caused by pressure thrust must be considered. Refer to Chap. A2 for more details.

Attachments

Attachments to piping, both external and internal, are required to be designed so that they will not cause flattening of the pipe, excessive localized bending stresses, or detrimental thermal gradients in the pipe wall. It is important that such attachments be designed to minimize stress concentrations, particularly in cyclic services or systems prone to imposed vibrations. Gusseting of small piping connections ($\leq$ NPS 1½, or $\leq$ DN 40) should be considered for equipment and piping in vibrating services to provide proper bracing of these appurtenances against potential fatigue failures.

Pressure Design of Non-standard Components

In general, all pressure-containing components need to satisfy code requirements. However, if the design of similarly shaped or proportioned components has been proven successful by performance under comparable service conditions, provision for the use of such components is allowed by the Code. Alternatively, the Process Piping Code, Sec. 304.7.2, permits the pressure design of the non-standard component to be proven either by an experimental stress analysis or by tests made in accordance with the ASME Boiler and Pressure Vessel Code, Sec. VIII.

SELECTION AND LIMITATIONS OF PIPING COMPONENTS

Pipe and Fittings

Table C7.3 lists typical piping materials for commonly used pipe found in process plants. It includes both welded and seamless pipe per the applicable specification.

TABLE C7.3 Piping Material Specifications

Material	Requirements
Cast iron	ANSI/AWWA C115 (Centrifugally Cast)
Ductile iron	ANSI/AWWA C151
Carbon steel	API 5L; ASTM A53, A106, A333/A333M, A671, A672, A691
Ferritic alloy steel	ASTM A335/A335M, A426, A671, A672, or A691: Classes 11, 22, 32, or 42
Austenitic Cr-Ni steel	ASTM A312/A312M, A358/A358M, A451
Monel	ASTM B165
3½ Ni or 9 Ni	ASTM A333/A333M
Inconel	ASTM B167
Aluminum	ASTM B241/B241M
Incoloy	ASTM B407, B423, B705

The majority of process plant piping is carbon steel, either longitudinally welded or seamless.

Cast-iron and ductile-iron pipe materials are usually limited to Category D water services not subject to freezing for most process plants, and typically are specified as centrifugally cast material. Low-melting-point alloys, such as aluminum, brass, and bronze should not be used in flammable or combustible fluid services.

The following list provides some guidelines on the application of welded pipe as typically used within hydrocarbon processing plants:

1. All longitudinally or spiral-welded pipe should be hydrostatically tested, and inspected by either ultrasonic or electromagnetic means by the manufacturer.
2. The use of furnace butt-welded pipe in typical process plants is usually limited to a maximum size of NPS 4 (DN 100) and restricted to water service per Category D of the B31.3 Piping Code.
3. Longitudinally welded carbon steel pipe is usually supplied to either electric-welded or fusion-welded specifications and typically acceptable for most applications requiring carbon steel pipe.
4. Spiral-welded pipe, as specified by API 5L, is primarily used outside of normal process units, typically for carbon steel offsite piping, including tank farms and terminal transfer piping. The spiral seams should be double-submerged arc-butt-welded.

Applicable standards and sizes of fittings are summarized in Table C7.4.

TABLE C7.4 Recognized Standards for Fittings

Fittings	Size range	Applicable Standards
Steel buttwelding fittings	NPS ½ thru 24 (DN 15 thru 600) Over NPS 24 (>DN 600)	ASME B16.9 ASME B31.3
Steel socket welding and threaded fittings	NPS ½ thru 2 (DN 15 thru 50)(1)	ASME B16.11(2)
Malleable iron threaded fittings(3)	NPS ½ thru 2 (DN 15 thru 50)	ASME B16.3
Gray iron and ductile iron fittings(4)	NPS 2 thru 48 (DN 50 thru 1200)	ANSI/AWWA C110
Flanged fittings	NPS ½ thru 24 (DN 15 thru 600)	ASME B16.5

Notes:
(1) Normally used sizes.
(2) Covers NPS ⅛ (DN 6) through NPS 4 (DN 100) fittings.
(3) Limited to air, inert gas, and water service.
(4) Gray iron limited to water service. Ductile iron limited to nonhydrocarbon service.

There are many Code mandated restrictions for the use of fittings, bends, and other related components which are not universally applicable to all process plant services. Some guidelines, however, are of value to the designer and are listed in the following paragraphs.

- In typical process complexes, flanged connections should be limited to locations where their use is considered essential to the operation and maintenance of the unit. This is particularly the case for critical services where welded fittings and connections should be used to reduce the potential for leakage associated with flanged connections.
- Butt-welding elbows are typically of the long-radius type unless specific layout restrictions require the special application of short-pattern elbows.
- In services with very high corrosion rates, butt-welding fittings are preferred to threaded and socket-welding fittings.
- Pipe couplings or threaded fittings made of cast, malleable, or wrought-iron are not permitted for flammable fluids within process limits or hazardous fluids in any area.
- Large-radius pipe bends are preferred to butt-welding elbows for reciprocating compressor suction and discharge piping, vapor relief-valve discharge piping, and piping conveying corrosive fluids (such as acid) where turbulence in a fitting may cause excessive corrosion.
- Threaded plugs are preferred to pipe caps for threaded end closures to reduce dead-end corrosion problems caused by inadequate draining of trapped corrosive fluids.
- The use of bell-and-spigot fittings is limited to water and drainage service.

Special Considerations for Fittings in Abrasive Fluidized Solid Services. The following additional guidelines are offered for fittings and other pipe components in fluidized solids services where internal erosion concerns exist:

- Long radius bends should be used for dense-phase flow of pulverized abrasive solids and for all piping which handles either pulverized or granular solids suspended in liquids or granular solids suspended in gases.
- Long radius bends or dead-end tees should be used for piping which conveys pulverized abrasive solids suspended in gas in the dilute phase. Dead-end tees (so arranged that the flow will impinge against the dead end) have a longer life than bends in abrasive service and should be used if the system can be designed to accommodate the resulting increase in pressure drop.
- Similarly, if the flow is through a branch into a header (or run pipe) in a piping system which transports pulverized abrasive solids suspended in gas in the dilute phase, a dead-end cross (so arranged that the flow will impinge against the dead end) should be considered.

Piping Joints

The type of piping joint used must be suitable for the pressure-temperature conditions and should be selected by giving consideration to joint tightness and mechanical strength under the service conditions (including thermal expansion), and to the nature of the fluid handled with respect to corrosion, erosion, flammability, and toxicity. In general, the number of disassembly joints is minimized; most joints are welded if the material is weldable.

Welded piping is used almost exclusively for transporting hydrocarbons and other flammable fluids. This includes bypass piping, alternate process connections, and auxillary piping systems such as gland oil, seal oil, lubricating oil, fuel gas, fuel oil, heating or cooling oil, flushing oil, flue gas, blowdown piping and the like. Welded construction is also used for all piping outside process unit limits which is used for the transfer of hydrocarbons or most other process fluids.

Welded Joints. The Code permits welded joints in all instances in which it is possible to qualify welding procedures, welders, and welding operators in conformance with the rules of the Code. There are, however, a few minor additional considerations for seal-welded (threaded) and socket-welded joints, which are typically limited to pipe sizes NPS 2 (DN 50) and smaller, except for air or water below 250°F (121°C). For example, the Code cautions against the use of socket-welded construction in cases where severe crevice corrosion or erosion could occur. The Code also states that seal welds may be used to avoid joint leakage but that they shall not be considered as contributing any strength to the joint.

Flanged Joints. The number of bolted flanged joint connections in a piping system is usually determined by maintenance and erection considerations, including flanged joints needed for the insertion of blanks during shutdown and for system isolations during initial hydrostatic testing. Where flanges of different ratings are bolted together, the rating of the joint must not exceed the lower rated flange. The selection of flanges is a topic within itself, which will be discussed in more detail in a subsequent section.

Threaded Joints. Economics will limit the use of threaded piping to small pipe sizes, NPS 2 (DN 50) and smaller, for most services. It is also used for most galvanized piping connections. The threading of pipe with a wall thickness less than ASME B36.10M standard wall is not permitted.[11] The use of threaded joints also should be avoided where crevice corrosion, severe erosion, or cyclic loading may occur.

All pipe threads on piping components must be taper pipe threads in accordance with ASME B1.20.1, except that:

- Pipe threads other than taper pipe threads may be used for piping components where tightness of the joint depends upon a sealing surface other than the threads (e.g., a union comprising of male and female ends joined with a threaded union nut), and where experience or tests have demonstrated that such threads are suitable for the condition.
- Couplings, NPS 2 (DN 50) and smaller, with straight threads may be used only for Category D Fluid Service, and only with taper-threaded mating components.

Seal welding of threaded joints is recommended for all services except for Category D fluid services. Threaded joints also do not need to be seal welded if the joint is for instrument connections or for piping components that require periodic removal for maintenance. Similarly, seal welding is typically not required for plugs and caps for drain and vent valves, and for union ring threads.

Expanded Joints. This type of joint is more commonly used on the piping and tubes for refinery heaters or steam generators. Expanded joints are excluded for use in hazardous and/or toxic services and under severe cyclic conditions. Adequate means must be provided to prevent separation of the joint if used. Expanded joints are not typically used in process applications, and if they are used, considerations must be given to the tightness of the expanded joint when subjected to vibration, or differential expansion or contraction due to temperature cycling or external mechanical loads.

Flared, Flareless, and Compression Joints. The use of flared, flareless, or compression type tubing fittings may be considered for tubing connections, as may be required for instruments or other similar devices, within the limitations of applicable component standards or specifications. In the absence of such standards or specifications, the adequacy of the fitting should consider the following:

- The pressure design must meet the requirements of the Code.
- A suitable quantity of the type and size of fitting to be used should meet successful performance tests to determine the safety of the joint under simulated or similar service conditions.
- Fittings and their joints must be suitable for the tubing with which they are to be used.
- Fittings must not be used in services which exceed the manufacturer's maximum pressure and temperature limits and recommendations.

Caulked Joints. The term *caulked joints* applies to joints of the bell-and-spigot type which are permitted only for Category D water service and to a temperature of not over 200°F (93°C). They also must be used within the pressure-temperature limitations of the pipe to which they are applied. Provisions must be made to prevent disengagement of the joints at bends and dead ends and to support lateral reactions produced by branch connections or other causes. Further details on this type joint are covered in Joining Cast-Iron Pipe in Chap. A2 of this handbook.

Brazed and Soldered Joints. Fillet-brazed or fillet-soldered joints may not be used in process piping, but the use of soldered and silver-brazed socket-type joints is permitted in nonflammable nontoxic service. The melting point of brazing alloys should be considered where possible exposure to fire is involved.

Other Proprietary Joints. Coupling-type, mechanical-gland type, and other proprietary-type joints are available and may be considered for use provided adequate provision is made to prevent separation of the joints. The design should be verified according to the procedures of ASME B31.3 for special fittings, which should include the performance testing of a prototype joint to confirm the safety of the joint under simulated service conditions. These tests should incorporate anticipated loading conditions, including the simulation of vibration, fatigue, cyclic conditions, low temperature, thermal expansion, or hydraulic shock.

Selection and Limitations of Flanges

Flange components used in most process plants follow the design and material requirements of the standards listed in Table C7.5. It is important to note that large-diameter flanges specified by ASME B16.47 ‘‘Large Diameter Steel Flanges’’ are available in 2 different size categories: Series A, which are dimensionally the

TABLE C7.5 Flange Material Specifications

Flange material	Size range	Applicable standard
Carbon steel Ferritic alloy steel Austenitic Cr-Ni steel 3½% Ni steel	NPS ½ thru 24 (DN 15 thru 600)	ASME B16.5
	NPS 26 thru 60 (DN 650 thru 1500)	ASME B16.47 Series A and B(1)
Cast-iron	NPS 1 thru 48 (DN 25 thru 1200)	ASME B16.1
Nickel Nickel copper (monel) Nickel-chromium-iron (inconel) Hastelloy B-2 and C-276	NPS ½ thru 24 (DN 15 thru 600)	ASME B16.5
	NPS 26 thru 60 (DN 650 thru 1500)	ASME B31.3(2)
Aluminum bronze	NPS ½ thru 24 (DN 15 thru 600)	ASME B31.3(3)
Aluminum alloy	NPS ½ thru 24 (DN 15 thru 600)	ASME B31.3, Appendix L(3)

Notes:

(1) ASME B16.47 Series A flanges (previously specified by MSS SP-44) and Series B flanges (previously API-605 now withdrawn) specify different flange patterns for most sizes.

(2) Dimensions including flange face finish per ASME B16.47, Series A or B as specified by the User.

(3) Dimensions including flange face finish per ASME B16.5.

same as those covered by MSS SP-44, and Series B which are dimensionally the same as those previously covered by API-605 (withdrawn).[12] Most large flange installations in process piping are to Series B flange patterns, except where ASME B16.47 Series A flanges may be required to accommodate flangeless or lug type valves or other similar flangeless components, or to mate with existing equipment flanges.

Flanges of materials other than those listed in applicable standards or flanges with special dimension for mating to equipment should be in accordance with ASME B31.3 following the design requirements of the ASME BPV Code Sec. VIII, Div. 1.

Flange Types. Several different flange types are permitted by the standards listed in Table C7.5, as principally covered by ASME B16.5. These include different types of attachment to the pipe including threaded, lapped, and welded as covered in more detail by Chap. A2 of this handbook. Of the welded type, most flanges are the butt-welded, slip-on, or socket-welded types. The majority of flanges are butt-welded, which are more commonly referred to as the welding neck flange. Socket-welded flanges are typically limited to small-diameter connections less than NPS 2 (DN 50). Slip-on flanges fit over the outside diameter of the pipe and are attached with fillet welds at both the pipe end and off the hub end of the flange.

Typical restrictions on the use of slip-on flanges include:

- While available in most pressure classes, slip-on flanges are more typically limited to Class 300 or lower pressure rating in process plant piping. The available raised face gasket seating area can preclude commonly used gaskets in the case of slip-on flanges for higher class piping.
- They are limited to services with design temperatures below 750°F (400°C).
- They should not be used where the specified corrosion allowance exceeds 0.125 in (3 mm).

The Code restricts the use of threaded flanges as it does any threaded pipe joint. Some limits on the application of threaded flanges include:

- The use of cast, nodular, wrought and malleable iron threaded flanges should be avoided.
- Threaded steel flanges for steel pipe are usually limited to water or air (or other Category D) services for sizes NPS 6 (DN 150) or smaller and with design temperatures not exceeding 250°F (121°C).
- Threaded flanges on cast iron or ductile iron pipe should be steel material.

The following recommended limitations should be considered with the use of lap joint flanges for process plant applications:

- Lap joint flanges should not be used where the combined longitudinal stresses in the pipe at the lap-joint stub-end (resulting from pressure, weight, and thermal expansion) exceeds the ASME B31.3 basic allowable stress at the pipe design temperature.
- The flange may be of a material different from that of the pipe, provided the flanged joint will not be subject to galvanic corrosion (e.g., carbon steel flanges may be used on lap-joint stub-ended 18 Cr 8 Ni pipe in above ground services).
- Stub-ends for lap joint flanges, if fabricated by welding, should be made with full penetration welds

The following additional limitations on flanges are included for the designer's guidance.

- In services with very high corrosion rates, the bore of weld neck flanges should be the same inside diameter as the attached piping (if not the same, consider taper-boring the component with the smaller inside diameter).
- ASME Standard B16.47 "Large Diameter Steel Flanges" governs steel flanges in sizes NPS 26 through 60 (DN 650 through 1500). However, the designer must ensure that the flange drilling on such flanges will match that of the equipment to which it is to be attached. Use Series A for previous installations with MSS SP-44 "Steel Pipe Line Flanges," and Series B for flanges mating to equipment with API 605 "Large-Diameter Carbon Steel Flanges."

Selection of Flange Facings

Several different types of flange faces are used as the contact surfaces to seat the sealing gasket material. In the case of Class 125 cast iron flanges, full faces are provided with a phonographic finish. ASME B16.5 and B16.47 define various types of flange facings, including the raised face, the lapped, and the large male and female facings which have identical dimensions to provide a relatively large contact area. Other flange facings covered by these standards include the large and small tongue-and-groove facings, and the ring joint facing specifically for ring joint type metal gaskets. Chapter A2 of this handbook provides detailed descriptions of the various flange faces and their uses.

When flat face (FF) Class 125 cast iron or nonmetallic flanges are bolted to Class 150 steel flanges, the 1⁄16 in (2 mm) raised face on the steel flanges should be removed to preclude possible damage to the mating flange.

The raised face (RF) flange face is the most common type used in process plant applications. This face type allows the use of a wide combination of gasket designs, including flat ring sheet types and metallic composites such as spiral wound and double jacketed types. The typical flange face finish for ASME B16.5 RF flanges is 125 to 250 μin Ra (3 to 6 μm Ra). The use of ring joint gaskets specifically requires the use of grooved ring joint (RJ) flanges. These are typically used in relatively high pressure (Class 600 and higher rating) and/or high temperature services above 800°F (427°C), and are usually the gasket of choice for highly cyclic temperature services.

Selection and Limitations of Gaskets

A considerable variety of gaskets is in common use for the flanges located within process plants. These can be nonmetallic or metallic, or a composite of nonmetallic and metallic materials.[13] The majority of nonmetallic gaskets are soft sheet materials such as rubber, vegetable, and other mineral fibers, cork, asbestos, PTFE (polytetrafluoroethylene), and graphite. These sheet gaskets are manufactured to the dimensional standards of ASME B16.21.[14] The composite gasket types combine metal and a soft material, the metal to provide added strength to withstand higher pressures and temperatures of the confined fluid, and the soft material to provide resilience. Spiral wound (SW) gaskets with metal strip spirally wrapped with resilient filler material, and metallic double jacketed with soft material filler are two of the most common gaskets of this type. Metallic gasket types come in various shapes and constructions, including flat and ring types. Ring joint gaskets typically of the oval cross section are used in some of the more critical fluid services.

Until the last decade, asbestos was without question the principal gasket material used in petroleum and petrochemical plants. While the importance of finding acceptable substitutes to asbestos is generally recognized within the industry, it is widely accepted that comparable gaskets with all of the same attributes of asbestos have yet to be identified. Due to its unique properties of chemical inertness, thermal behavior, and excellent sealability, asbestos has been a major ingredient of many gasket compositions for the past century.

In recent years, flexible graphite has become the leading gasket material to replace asbestos for many users. This is particularly the case for the petroleum and petrochemical industries, where a broad range of application is required, including services at elevated temperatures. Yet, even flexible graphite gaskets have some significant limitations and continue to be the subject of ongoing research to evaluate long-term service characteristics at elevated temperatures.[15]

Principal characteristics for the ideal gasket within the petroleum and petrochemical industry (and other related processing plants) should include the following performance factors and other attributes:[16]

- *Overall Mechanical Integrity.* The mechanical strength of a gasket is a primary consideration to ensure sufficient strength against crushing and possible in-service blowouts. *Gross leaks* occur because, for some reason, the bolt load has been reduced to the point where the hydrostatic end force at the joint is roughly equal to the total bolt load. *Gasket stiffness* is an important consideration in precluding gross leakage. Another important mechanical integrity consideration of a gasket is its ability to resist *gross instability* or *crushing* with gasket seating during initial boltup and subsequent in-service retightening.

  Some recent experience with spiral wound gaskets filled with flexible graphite has demonstrated the importance of ensuring sufficient crush strength resistance.[17] A significant percentage of installed SW gaskets for a refinery expansion were found during the final stages of precommissioning to have gross buckling of the inner windings. The gaskets were specified without inner retaining rings, which raised questions about current standards (ASME B16.20) requirements for inner rings. While this phenomena is the subject of industrywide evaluation, ASME B16.20 recommends the use of inner retaining rings with flexible graphite filled spiral wound (SW) gaskets where experience has demonstrated inward buckling to be a problem.[18] Considering the extent of buckling experience reported to date, and the potential for severe leakage and consequential damage due to entrained spiral fragments migrating into downstream equipment, some users specify inner rings for all NPS 4 (DN 100) and larger SW gaskets with flexible graphite filler.
- *Leak Tightness.* A gasket for elevated temperature service must have good creep and stress relaxation resistance, and leak tightness. When addressing the sealability of gasket materials all of the operating parameters for a specific service impose their influence, to some extent, on the overall performance of the gasket. These include, for example, the physical nature of the fluid (i.e., gas, liquid, molecular weight, aggressiveness of the fluid on the gasket material, and fluid temperature and pressure). *Gasket creep and stress relaxation* first occurs during boltup and may also occur during heatup and subsequent cyclic loading, leading to additional creep losses. *Gasket degradation* results in gasket thickness loss, which further reduces bolt preload over time and increases the vulnerability of the joint. Degradation is the result of pyrolysis, oxidation, and other chemical reactions because

of high-temperature exposure and interaction with the process fluid. *Aging effects* as the result of prolonged exposure to service environments and temperature can lead to further degradation, affecting the useful life and sealing performance of the gasket.

- *Fluid Service and Gasket Material Compatibility.* Will the gaskets tolerate the chemicals with which they will be in contact; that is, are they compatible with the contained chemicals? The user should *not* assume that: (1) if a gasket is good at one concentration and/or temperature range, it will be acceptable for other concentrations and/or temperatures, or (2) if it is good for two or more chemicals alone, it will be good for a mixture of these chemicals. This also needs to be reviewed for all material components of composite gasket constructions. Industry experience is very valuable here in confirming the suitability of the gasket material for the intended service.

  Galvanic corrosion may be a problem if an electrically conducive fluid is present with a gasket material, such as flexible graphite, that is also electrically conductive. Graphite is near the cathodic end of the galvanic scale, between silver and gold. The wider the distance between the two materials, the more rapid the corrosive attack of the anodic material.

  As flexible graphite is a relatively fragile material, most process plant gaskets have metal inserts. These can suffer galvanic corrosion if coupled with the flexible graphite under certain electrochemical environments. Salt water service, for example, has proven to be a problem with composite flexible graphite gaskets, where galvanic attack can cause severe corrosion of the metallic insert.

  The manufacturer should be consulted if there is any doubt about the compatibility of a gasket for the intended service. This is also the case for any potential concerns for galvanic coupling between the gasket material and metal reinforcement of a proposed gasket for an electrolytic chemical environment.

- *Fire Safety.* The integrity of gasketed flanged joints in flammable services, exposed to fires, is a key consideration in accepting substitutes for asbestos in petrochemical and refinery plants. Asbestos gaskets have been generally recognized as being inherently fire safe as demonstrated by the favorable service experience accumulated over the years. Of the numerous nonasbestos products now on the market, many would appear to have questionable fire integrity capabilities (e.g., sheets based on aramid, glass fibers, or on PTFE). This is a principal advantage for flexible graphite-based gaskets, which have demonstrated capabilities of being inherently fire safe.

- *Broad Range of Application.* Prior to falling out of favor, asbestos-based gaskets represented about 95 percent of all refinery and chemical service gasket applications. Ideally, substitutes should also exhibit a wide range of service applications. The obvious advantage of standardizing on one or two gasket materials is that doing so helps to minimize the chances of misapplication. Standardization also simplifies procurement and stocking requirements, which could get out of hand if many different types of gasket materials were kept in the warehouse stores.

Adding to the merits of flexible graphite as a gasketing material is the wide spectrum of gasket styles that are commercially available. These styles include the more commonly used reinforced flexible graphite sheet (RFG) gaskets, and flexible graphite-filled spiral wound (SW) and double jacketed (DJ) gaskets. Other less conventional styles such as corrugated metal covered with flexible graphite (CMCG)

TABLE C7.6 Gasket Material Specifications

Gasket type	Standards	Design range	
		Class	Temperature
Compressed Asbestos Fiber (CAF) sheet	ASME B16.21	≤300	−50 to 750°F (−45–400°C)
Metal Reinforced Flexible Graphite (RFG) sheet	Dimensions per ASME B16.21	≤300	−250 to 750°F (−157–400°C)
Corrugated Metal Flexible Graphite Covered (CMGC)	Dimensions per ASME B16.21	≤300	−250 to 750°F (−157–400°C)
Grooved Metal profile flexible Graphite Covered (GMGC)	Manufacturer's standards	≤300	−250 to 750°F (−157–400°C)
Corrugated Double Jacketed (DJ) filled with flexible graphite	ASME B16.20 with corrugated jacket	≤300	up to 875°F (up to 468°C)
Spiral Wound (SW)—Flexible graphite filled	ASME B16.20	≤900	up to 875°F (up to 468°C)
—Asbestos filled			up to 1000°F (up to 538°C)
—PTFE filled			up to 400°F (up to 204°C)
Ring Joint (RJ)	ASME B16.20 for oval shape	≤2500	Any

Notes:
(1) Use of asbestos-based gaskets subject to local restrictions.
(2) Typical fill materials for SW and DJ gaskets can be asbestos, flexible graphite, and PTFE (for nonflammable services).
(3) Both inner and outer retaining rings are recommended for spiral wound (SW) flexible graphite filled gaskets for all sizes greater than NPS 4 (DN 100), or if gasket design temperatures exceed 800°F (427°C).

and grooved metal covered with flexible graphite (GMCG) have also evolved with good user experience.

Table C7.6 provides a listing of the more commonly used gaskets within refinery and chemical plant process units, and the applicable standards available for their design and construction.

The temperature ranges indicated by Table C7.6 are approximate and will vary according to the service involved. This is particularly the case with flexible-graphite based materials, where the extent of material degradation and oxidation will vary according to the fluid service involved. As discussed in the previous subsections, gasket material compatibility should be confirmed for the specific fluid service intended.

A more detailed list of gasket materials for specific services is provided in Chap. A2 of this handbook. These include various elastomeric nonasbestos gasket materials, which should be considered to have relatively low service temperatures and generally are all non-fire safe.

TABLE C7.7 Bolting Material Specifications

Design metal temperature		Flange rating	Bolts		
°F	°C	ANSI Class	Type	ASTM Std.	Grade
−20 to 400	−29 to 204	≤150	Bolt	A307	B
−20 to 800	−29 to 427	Any	Stud	A193/A193M	B7
800 to 1100	427 to 593	Any	Stud	A193/A193M	B16
1100 to 1200	593 to 650	Any	Stud	A193/A193M	B5
1100 to 1500	593 to 815	≤300	Stud	A193/A193M	B8M Class 1(1)
−150 to −20	−101 to −29	Any	Stud	A320/A320M	L7(2)
−325 to −20	−198 to −29	Any	Stud	A320/A320M(3)	B8 Class 2(4)

Notes:

(1) Class 1 (low yield) bolts should not be used for Class 400 or higher flanges nor for flanged joints using metallic gaskets unless supported by appropriate design calculations per ASME B31.3, Par. 309.2.1.

(2) Test temperature for impact testing of all L7 bolts, per ASTM A320/A320M, should be −150°F (−101°C).

(3) ASTM A 193/A193M Grade B8 Class 2 bolts with ASTM A194/A914M Grade 8 nuts may be used as an alternate.

(4) Grade B8 bolts must be strain hardened (i.e., Class 2 of designated ASTM material standard).

Selection and Limitations of Bolting

Bolting as typically used within the processing industry is threaded in accordance with ASME Standard B1.1 for Unified Screw Threads. In diameters 1 in (25 mm) and smaller, the threads conform to the coarse thread series. For larger bolt diameters, the eight-pitch thread series applies for bolting to this standard used in process plants.[19]

Table C7.7 lists typical bolting materials and recommended design pressure and temperature rating limits for flanges found in process plants. A more complete listing of permissible bolting materials allowed by ASME B16.5 for steel pipe flanges is provided in Chap. B2 of this handbook.

While carbon-steel machine bolts may be used to make flange connections for bolt metal temperatures from −20 to 400°F (−29 to 204°C) inclusive, they are considered to be low-strength bolts and should be limited to noncritical low-pressure (Class 150) services. However, ASME B16.5 permits the use of these bolts for flanges up to Class 300 with the use of nonmetallic gasketing material.

The most widely used bolting materials in process plants are ASTM A193 Grade B7 stud bolts with ASTM A194 Grade 2H heavy semifinished hexagonal nuts. A number of operating companies, in fact, use these low-alloy materials almost exclusively, to simplify inventories and to reduce the possible misapplication of low-strength carbon-steel bolting. While the code permits the use of Grade B7 bolts from −50 to 1000°F (−45 to 540°C), a more conservative temperature range is recommended, as indicated by Table C7.7. At the high end, the use of Grade B16 low-alloy bolting is recommended instead of Grade B7, since the latter has greater creep relaxation concerns at elevated temperatures, which could lead to in-service loosening of the flange. At the lower temperature range, A320 Grade L7 bolts are more typically used below −20°F (−29°C), consistent with the use of impact tested carbon steel and other low temperature flange materials.

With the exception of carbon-steel machine bolts, the materials listed in Table

C7.7 refer to stud bolts. These should be threaded full-length with continuous threads to minimize stress concentrations within the bolt. The use of hardened washers, typically to ASTM F436, also should be provided under the nuts for the larger-size bolts [typically 1½ in (38 mm) and larger bolts] to minimize galling of the flange back face.

Selection and Limitations of Blanks

In a process plant, blanks are usually required to isolate individual pieces of equipment at shutdown and to positively block off selected process lines at the process unit limits. They are also needed during operation wherever positive shutoff is required to prevent leakage of one fluid into another. Blanks, especially for larger-size flanges, are typically provided with a companion spacer which has a full-size opening consistent with the inside bore diameter of the flange. Figure-8 blinds (also called *spectacle blanks*) combine both the blank and spacer with a tie bar. Figure C7.6 provides typical details for handle-type blanks, spacers, and figure-8 blanks.

Typically, operating line blanks, spacers, and figure-8 blinds, if specified for installation between ASME B16.5 flanges, are designed in accordance with the requirements of ASME B16.48, Steel Line Blanks (API 590, withdrawn), to accommodate the full rating pressure of the flange class involved. Blanks can also be designed in accordance with ASME B31.3.

Blanks ideally should be located in horizontal lines to ease their installation and removal. Blanks should not be used in vertical water and steam lines in climates where danger of freezing exists.

The use of figure-8 blanks obviously ensures that the companion spacer is on hand when needed (and vice versa). However, these are difficult to handle in the larger sizes [i.e., above NPS 12 (DN 300)], and instead separate spacers and blanks are used. The paddle handle provided on these devices should make it clear at a glance whether a bank or a spacer is installed within mating flanges. An accepted convention is to provide a T-bar off the end of the paddle handle for blanks, and a drilled hole or formed eye in the handle-end of spacers, which allows the lifting of these respective devices yet clearly distinguishes them from each other.

Piping systems should be equipped with spacers, figure 8 blanks, or designed with sufficient flexibility and flanges to permit blinds to be readily installed for isolation of equipment in accordance with the following criteria:

- In the piping or at the nozzle of all process and utility connections to vessels where necessary to provide safe entry for inspection and maintenance personnel
- In the suction and discharge lines of all turbines and compressors, except atmospheric suction of air fans
- At the inlets and outlets of process piping to fired heaters
- All fuel and pilot gas headers to each fired heater
- Spared equipment capable of being bypassed for maintenance
- Safety valve bypass lines
- Process battery limits

Blanks should be made from a plate or forging specification, approved for use by ASME B31.3, of essentially the same chemical composition as the mating flanges and piping involved.

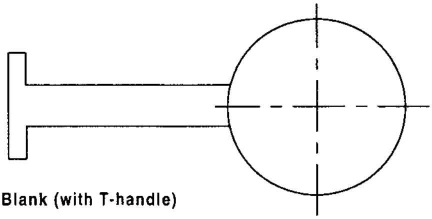

(a) Paddle Blank (with T-handle)

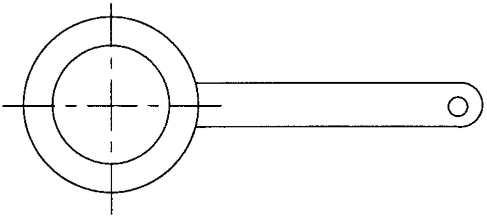

(b) Paddle Spacer

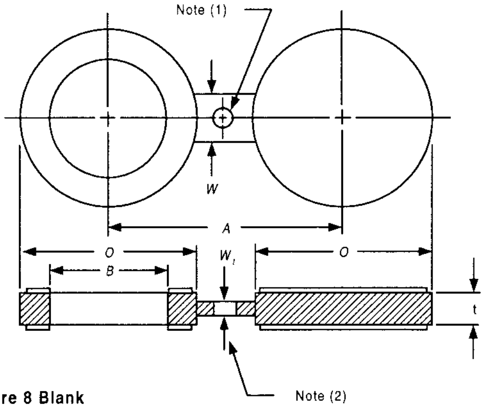

(c) Figure 8 Blank

NOTES:
(1) Hole size (where required due to bolt spacing) should be the same as the flange bolt hole.
(2) The thickness of the web (or tie bar) dimension W_t should be 0.25 in (6 mm) minimum, or equal to t if less than 0.25 in. (6 mm).

FIGURE C7.6 Paddle-type and figure-8 blanks and spacers.

Selection of Strainers

Strainers are an important component of piping systems to protect equipment from potential damage due to dirt and other debris that may be carried by the process fluid. This includes the use of temporary strainers that may be placed upstream of mechanical equipment to protect it from construction debris left in the pipe. Permanent strainers are also provided for some inlet piping to protect equipment from in-service corrosion products and other product residues. Typical strainer designs and construction details are provided in Chap. A2 of this handbook.

Centrifugal and reciprocating pumps handling material containing solids should have permanent strainers provided in the suction lines to the pump or in the vessel from which the pump takes suction. The free area of such strainers should be not less than three times the cross-sectional area of the suction line. The location of permanent strainers (as contrasted to the temporary cone type which is installed at a flanged joint) also merits attention.

Some typical strainer opening or mesh sizes are provided by Table C7.8 for various equipment. The mesh sizes (or openings) are the usual maximums for normal operation. These opening sizes vary with the application, but should not exceed the value recommended for the particular type of equipment. The available pressure differential usually determines the minimum clear opening for screens.

The material for the strainer body (including bolting) should be equal to the material specified for the valves in the same service. The screen material generally should be the same as the valve trim (e.g., 11 to 13 percent chrome or Type 316 stainless steel for most services).

Permanent strainers should have baskets that can be flushed clean during operation or easily removed for cleaning. If considerable clogging of strainers is anticipated the strainers should be of the self-cleaning or the duplex type to permit continual flow of clean liquid.

Valve Applications and Limitations on Use

The successful performance of any process plant piping system is dependent on the proper selection and location of the valves that control and direct the flow of the piped fluids. There are numerous valve types and intended applications within a typical process plant, and to cover them all is beyond the scope of this chapter. More justice, however, is given this topic in Chap. A10 of this handbook, which provides detailed descriptions of valves and their features. This section will overview the application of the more commonly used valves within process plants, which can be categorized according to their function.

Block (Isolation) Valves. Block valves, as the name implies, are used to stop flow or isolate a portion of a system. Basic design requirements of a block valve are to offer minimum resistance to flow when fully opened, and conversely to achieve tight shutoff (nil leakage) when fully closed. Principal block valve types include *gate, globe* (although used mostly to regulate flow), *ball, butterfly, plug, ram*, and *diaphragm* valves. These achieve the required objectives in varying degrees, so all types can typically be found in a large process complex. Of these, however, the gate valve is the most commonly used block valve for refinery and chemical plant applications.

Throttling (Regulating) Valves. Throttling valves are principally used to regulate the flow of fluid within a piping system. This is achieved by varying the valve's open position to impart the required pressure drop to regulate the volume of flow. In the case of process control valves, throttling valves are used to control flow, pressure, or temperature, and in all situations the task is achieved by increasing or decreasing the flow through the valve in response to a signal from a pressure, flow, or temperature controller. Typical throttle valves include *globe, needle, butterfly, ball, plug* and *diaphragm* valves, which as previously noted can also serve a dual function to block flow.

Backflow Protection. *Check valves* are used to prevent backflow. A principal requirement of all check valves is that they be self-actuating, with little resistance

TABLE C7.8 Strainer Screen Openings for Equipment Inlet Piping

Equipment	Service	Pipe or flange size, NPS (DN)	Strainer type (Temporary) (Permanent)	Mesh size or opening, in
Pumps				
Centrifugal:	Suction	3 (80) and under	TEMP	5 × 5
Horizontal single stage, Vertical inline		3 to 6 (80–150)		3 × 3
		Over 6 (150)		½
Horizontal multistage, Vertical deepwell	Suction	6 and under	TEMP	20 × 20
		Over 6		⅛
Reciprocating	Suction	All sizes	TEMP	5 × 5
Rotary, turbine	Suction	All sizes	TEMP	20 × 20
Compressors				
Centrifugal:	Air, Suction	All sizes	PERM	3 × 3
	Gas, Suction		TEMP	5 × 5
Reciprocating:	Air, Suction	All sizes	(PERM Filter)	—
	Gas, Suction		TEMP	20 × 20
Rotary screw:	Air, Suction	All sizes	PERM	20 × 20
	Gas, Suction		TEMP	20 × 20
Axial:	Air, Suction	All sizes	PERM Screen on Dry Filter	5 × 5
	Gas, Suction		TEMP	5 × 5
Turbines				
Gas:	Inlet Air	All sizes	PERM Screen on Dry Filter	5 × 5
Steam:	Inlet	All sizes	PERM	⅛
Other equipment				
Fuel-oil lines to burners	Inlet	All sizes	PERM	⅛
Air supply to pneumatically actuated equipment	Inlet	All sizes	PERM	40 × 40
Upstream of restriction orifices in bleed services	Inlet	All sizes	PERM	1/16
Energizing fluids to ejectors	Inlet	All sizes	PERM	¼

Acceptable Metric Equivalent Dimensions for Above Table

Screen					Perforated plate opening		Pipe size, NPS	
Meshes (per linear in)	Wire diam		Average opening width					
	in	mm	in	mm	in	mm	in	mm
100 × 100	0.004	0.102	0.006	0.15	1/16	1.5	3	80
80 × 80	0.0055	0.140	0.007	0.18	⅛	3	6	150
40 × 40	0.010	0.254	0.015	0.38	½	13		
20 × 20	0.016	0.406	0.033	0.85				
5 × 5	0.063	1.6	0.137	3.50				
3 × 3	0.063	1.6	0.272	6.90				

to forward flow and rapid closure triggered by reverse flow. The closing of the disk can be achieved with gravity effects or with the assistance of springs or pneumatic actuators to assist in the rapid closure of the valve. Typical check valves include the *swing disk, dual-disk butterfly, tilting disk, ball,* and *piston* types.

Pressure-Relief Devices. These devices are used to protect piping and equipment from being subjected to pressures that exceed their design pressures. Some pressure-relief or safety valves achieve this with a spring-retained disk which pops when sufficient pressure lifts it off a sealing seat. Another type incorporates a pilot valve which uses system pressure to control the movement of the relieving disk. Rupture discs, although not valves, can also achieve rapid pressure relief, which is accomplished by the disk bursting open at a predetermined pressure. These have the advantages of being leak-tight up to the rupture pressure and of being capable of relieving large rates of flow. However, they cannot adjust the set pressure, as can relief valves. Another major factor for considering relief valves versus rupture disks is that the rupture disks don't reseat when the pressure goes back below the set point.

Valve Standards/Specifications

Table C7.9 provides some of the specific standards used in the manufacture of block and check valves for process plants. Most valves conform to the standard pressure and temperature ratings specified by ASME B16.34.[20] The pressure-temperature ratings of B16.34 for standard-class valves parallels that of ASME B16.5 (for steel flanges) except B16.34 provides for higher pressure-temperature ratings for welding-end special-class valves that receive additional prescribed nondestructive examinations. As indicated by Table C7.9, several API Standards provide detailed design and manufacturing requirements for the specific valve types covered to supplement the principal design requirements stipulated by ASME B16.34. Refer to Chap. A10 for details. The points that follow will highlight several application

TABLE C7.9 Valve Standards for Process Plant Applications

ASME Standards	
B16.34	Valves—Flanged, Threaded, and Welding End
API Standards	
594	Wafer and Wafer-Lug Check Valves
598	Valve Inspection and Testing
599	Steel and Ductile Iron Plug Valves
600	Steel Gate Valves, Flanged and Buttwelding Ends
602	Compact Steel Gate Valves—Flanged, Threaded, Welding, and Extended-Body Ends
603	Class 150, Cast, Corrosion-Resistant, Flanged-End Gate Valves
607	Fire Test for Soft-Seated Quarter-Turn Valves
608	Metal Ball Valves, Flanged, Threaded, and Welding End
609	Butterfly Valves, Lug-Type and Wafer-Type
ASTM Standard	
A494/A494M	Castings, Nickel and Nickel Alloy
ANSI/AWWA Standard	
C504	Rubber Seated Butterfly Valves

considerations associated with some of the more commonly used valves covered by these standards.

Gate Valves. The majority of steel gate valves for use in refinery and chemical process plants are specified to API 600 covering Steel Gate Valves.[21] This standard provides for greater corrosion allowance and hence heavier wall thickness than ASME B16.34 for the same pressure rating. This allows the broader application of the same API 600 gate valve across multiple-service classes. API 600 also stipulates that the valve be of the Outside Screw and Yoke (OS&Y) type for the actuating stem works to minimize corrosion damage of this mechanism by locating the screw threads external to the valve.

Additional application considerations for gate valves include:

- The wedge design for gate valves should be the flexible type to allow for better sealing of both the upstream and downstream side of the gate to the valve body seats. It also compensates for differential thermal expansion effects that can occur between the valve body and the gate wedge. Solid wedges, however, may be used for small-diameter [NPS 2 (DN 50) or smaller] or lower-pressure-class valves (≤ Class 150).
- Valve trim materials for the stem and gate/body seats are typically specified by the user for the intended service in accordance with the trim alternatives defined by API 600. For critical nonlubricating services, valve seats are hard-faced to minimize seat travel wear.
- If the pressure differential across a closed gate valve is approximately equal to the pressure rating of the valve, consideration should be given to providing a pressure-equalizing bypass around the valve. Consideration should also be given to bypasses for valves in steam lines for warm-up purposes. When bypasses are provided, they should be sized in accordance with MSS SP-45, *Bypass and Drain Connection Standard*.[22]
- Gate valves with soft-seal (e.g., PTFE) inserts in the seat rings can provide improved leak-tight performance. However, it is important to confirm that proper metal-to-metal seat contact is achieved between the gate and body seats prior to installing the soft seals. This is needed to obtain normal gate sealing as a secondary backup to the soft seals should they be damaged during a fire.

Other Block Valves. *Butterfly valves, ball valves, nonlubricated plug valves*, and *lubricated plug valves* may be considered as possible alternates to gate valves. The majority of these valves rely on soft-seal materials to effectively achieve leak-tight performance. Table C7.10 identifies recommended temperature limits for several of the more common soft-seal materials used with these block valves.

TABLE C7.10 Valve Soft Seal Material Temperature Limits

	Temperature limit	
Soft seal material	°F	°C
PTFE (Polytetrafluoroethylene)	450	230
FEP (Perfluoro (Ethylene-Propylene) Copolymer)	400	200
VITON-A	400	200
BUNA N	250	120
NEOPRENE	200	90

Other design considerations for soft-sealed block valves include the following:

- Fire-tested type ball, plug, or butterfly valves should be certified per the requirements of API Standard 607, *Fire Test for Soft-Seated Quarter-Turn Valves,* if intended for flammable or other dangerous material services.[23] These fire-tested valves are specifically designed with metal-to-metal secondary sealing to minimize leakage across the block should the primary soft seals be destroyed during exposure to a fire.
- Soft-seated valves in liquid service should be provided with pressure relief for the body cavities. The liquid is usually relieved to the upstream side. This is needed to relieve pressure buildup and possible valve damage due to liquid thermal expansion within the body cavity, which cannot escape because of the leak-tight soft seals.

Globe Valves. As a general rule, hand-operated throttling valves for services where fine control is not required, and those for control valve bypasses, should be globe valves (integral stem and plug preferred). For severe throttling service, and where close control is required, a conventional control valve with a hand operator should be used. The only other common application for globe valves in process service is for mixing purposes where relatively tight shutoff is required.

In most process plants, internal corrosion is a greater problem than external corrosion. Consequently, it is common practice that all NPS ¾ (DN 20) and larger steel and cast-iron [and all NPS 2½ (DN 65) and larger brass] gate, globe, and angle valves (located above grade) be of the outside screw and yoke type.

Check Valves. The following design considerations are offered in the specification of check valves for typical process plant applications:

- Do not use check valves in vertical lines in which the flow is downward.
- Dual- and single-plate wafer check valves should be designed to API-594, *Wafer and Wafer-lug Check Valves,* requirements.[24] These types of check valves are not recommended for reciprocating compressor or reciprocating pump services, which could otherwise lead to pulsation-induced fatigue failures of the valves' spring-assist closure mechanisms.
- Ball or piston check valves should be of the self-closing type (gravity or spring assisted) and should not depend on flow reversal, or only the spring, to effect closure.
- Lift check valves are not recommended for use in services subject to fouling, coking deposits, or erosion.

Double Block and Bleed Valves. Under certain conditions double block valves are needed to prevent product contamination or where it is necessary to remove essential equipment from service for cleaning or repairs while the unit continues in operation. Of course, such equipment must be provided with a spare or it must be possible to bypass it temporarily without shutting down the unit. The nature of the fluid, its pressure and temperature, and many other factors must be considered when determining the need for double block valves.

Generally, double block valves should be considered for the onstream isolation of equipment if the fluid is flammable or otherwise hazardous, or if the fluid is in high-pressure or high-temperature service. Where double block valves are used, a NPS ¾ (DN 20) or larger bleed valve should be installed between the block valves

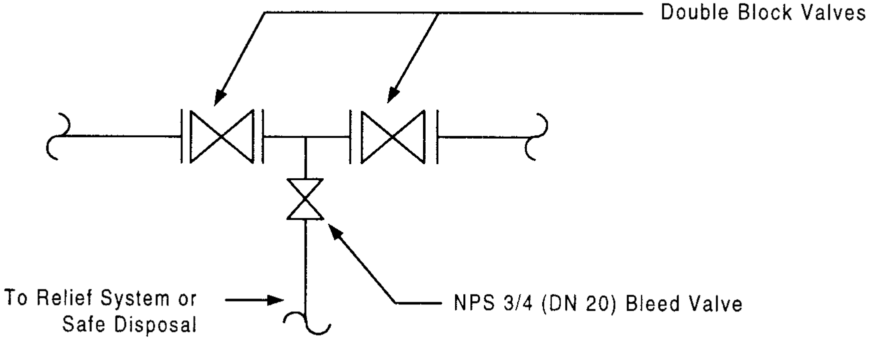

FIGURE C7.7 Double block and bleed valves.

(see Fig. C7.7). The purpose of the bleed valve is twofold. First, the bleed ensures that the upstream valve is in fact tight before slipping in a blind off the downstream block valve. The bleed connection also permits the safe withdrawal of moderate leakage from the upstream valve to again assure the tight shutoff of the downstream valve.

Depending on the service conditions, it may be possible to use a single block valve with a body bleed to provide *double block and bleed* provisions for onstream isolation of equipment. Gate valves with flexible wedges and with body or bonnet bleed valve can serve this purpose if specifically tested in accordance with API-598 for double block and bleed quality valves.[25] Some ball valves and nonlubricated plug valves, when equipped with a valve body bleed between the seats, can also be satisfactory substitutes for double block valves. Testing for double block and bleed quality valves requires the pressure-testing of each seat, with leakage measured through the valve body bleed as a means of substantiating the independent leak tightness of both the upstream and downstream seats of the valve.

GENERAL PROCESS PIPING SYSTEM CONSIDERATIONS

In previous sections, emphasis was placed on individual piping components. This section will look at the composite of these components by highlighting some of the important considerations required in the overall system design of process piping.

Materials Related Considerations

Proper materials selection is a key parameter in determining the adequacy of the performance of a piping system to sustain the extremes of temperature, chemical attack, or erosion. Such materials related considerations include the specific chemical, metallurgical, and physical properties of a piping system's material constituents, which can ultimately determine its suitability for a particular service.[26] Chapters A3 and B2 of this handbook expand on some of the principal considerations involved in the selection of materials for a specific piping system, which would include:

- *Strength.* The strength of a piping component or system is usually determined by the Process Piping Code, ASME B31.3, as it relates to the allowable working stresses for the materials under consideration. These allowable stresses are typically based on specified percentages of the material's yield and tensile strengths. It also considers creep and rupture stress rate properties for any material operating in temperatures within its creep range.
- *Toughness, or Ductility.* Toughness is the ability of a material to resist impact or to absorb strain energy when stressed beyond the elastic limit. Steel piping materials are normally considered to be ductile. Under certain conditions, however, steel may behave in a brittle manner and shatter like glass. In piping, this behavior typically occurs only at low temperatures. Temperatures below the *transition temperature* for any steel represent temperatures at which it will behave in a predominantly brittle manner. Hence, steel with a high transition temperature is more likely to behave in a brittle manner during pressure testing or in service. It is important that the material's transition temperature be well below the design minimum temperature expected in service for the piping system involved.
- *Corrosion Resistance.* This material property is a measure of a piping system's material ability to resist chemical attack from a specific process fluid throughout the range of expected operating temperatures and fluid compositions, or from its exposure to environmental effects. All common piping system materials react with some process fluid corrodants at certain temperatures. When specifying a material for a particular application, it is important to select a material whose corrosion rate in the presence of expected corroding is acceptable over the design life of the piping system.
- *Other Material Considerations.* In addition to corrosion, it is also worth mentioning other materials related degradation phenomena which need to be considered in the selection of the piping system materials. These would include, for example, materials resistance to *hydrogen attack* at elevated temperature, which is a particular concern of many refinery processes, and is generally attributed to the formation of methane (CH_4). This can occur for carbon-steel materials exposed to fluids with a high concentration of hydrogen at elevated temperatures. It is usual practice to specify low-alloy ferritic steel materials, increasing the amount of chromium composition between 1 to 5 percent depending on the hydrogen concentration and fluid temperature involved, to preclude hydrogen attack. Another materials related concern is *stress corrosion cracking,* which can occur with certain grades of austenitic stainless steel materials under a broad range of services and fluids. *Erosion* of piping materials can be another factor limiting the life of components. This is a principal concern for systems with fluids with some solids contents or high flow velocities resulting in significant material loss.

Unfortunately, the list of other special materials-related concerns for process piping can be quite extensive and well beyond the scope of this chapter, but these are covered to some extent in Chap. A3 of this handbook. It is important for the designer to have an appreciation of the service experience of the proposed materials for the intended fluid media to confirm its overall compatibility for these fluid service conditions.

Refer to App. E5 for piping and tubing material specifications for use in B31.3 applications. App. E6 provides some international pipe specifications.

Pressure Integrity

The pressure integrity design of a piping system needs to first determine the minimum required pipe wall thickness. The second consideration is the determination of the pressure rating of all the piping components, such as fittings and valves, within the system. Thus, verification is required that all of the individual components of the piping system are specified with sufficient wall thickness to be acceptable for the imposed pressure-temperature design conditions.

The designer is cautioned that regardless of the combination of operating pressure and temperature which results in the most severe condition from a stress standpoint, the selection of materials will often be governed by the extremes of operating temperature and pressure. In designing piping systems, it is simpler to use fluid temperature than metal temperature. Substantial savings, however, can be realized by making appropriate thermal calculations or tests to determine the metal temperature, especially if the fluid temperatures are high or if the system is internally insulated. Not only can flange (and valve) ratings and pipe thicknesses often be reduced, but occasionally less expensive materials can be used.

In considering metal rather than fluid temperatures, any savings in the cost of piping components must be balanced against the present worth of the additional heat to be lost from the piping components if the insulation is omitted. Flanges and valves which are to be left bare should be clearly marked on the piping drawings so that they are not inadvertently insulated.

Operability, Maintenance, Safety, and Accessibility

The overall piping system design will need to consider the operability, maintenance, and accessibility of the principal components. These factors are very dependent upon each other, which also need to be considered in the context of assuring the overall safety of the piping system.

Operability. From the process unit operators' perspective, the layout of the piping system needs to provide easy access to key components that must be operated frequently. This typically includes accessible positioning of the more frequently used block and control valves, and readable instruments installed directly off the piping. It is not possible, however, to make every valve and instrument directly accessible. Instead, consideration should be given for the frequency of operation and the degree of physical effort needed to perform the required operation. Important operable valves and instruments should be reachable while standing at grade or from an elevated platform provided for that purpose. The position of any valve handwheel or instrument control device should be such that the force needed to operate it can be applied without excessive strain on or undue contortions by the operator. It is also important that adjacent valves, lines, or other equipment not interfere with these operations.

Maintainability. The piping system layout must consider the maintenance requirements, whether anticipated or not, of the piping and equipment involved. The arrangement of the piping should ensure that sufficient space is provided for the maintenance of equipment and for the piping system, and the maintenance of the components within it. This should include, as examples, sufficient space allocations for the pulling of exchanger bundles, major equipment laydown spaces, machinery rotor and furnace tube removals, and for the dismantling of equipment where required. Maintenance requirements will also dictate the location of isolation block valves, especially those required for the onstream isolation of the key equipment and instruments. It is important to design the facilities so that the appropriate accessibility is provided to accomplish the required maintenance, including provision for any lifting equipment, such as davits, cranes, or trolley-beam hoists.

Safety Considerations. In laying out piping for operability and maintenance, it is important that equipment, valves, and other components are placed in locations where they do not create hazards to personnel. These could be tripping obstacles, head-knockers, or other obstructions which could lead to bodily injury. Safety design requirements for stairs, platforms, ladders, means of egress aisleways, and minimum headroom clearances, for example, need to be considered to provide a safe work environment. These requirements, obviously, should be reflected in the overall process unit design.[27]

Accessibility. This has already been discussed in some detail in terms of space and treatments to help workers do their job as related to the operability and maintenance of the piping system. Even for remote valve locations, the inclusion of a platform could be justified, considering the importance of the component involved and the associated possibility of personnel injuries if not provided.

Flexibility and Support of Process Plant Piping

The general challenge of flexibility and expansion of piping systems is treated in Chap. B4 of this handbook, and the support of piping systems is covered in Chap. B5. Techniques, methods, and procedures developed in those chapters are applicable to process plant piping. Appendix E9 lists the capabilities of piping related computer programs.

The need for detailed analyses of piping systems must reflect the acceptability of imposed reaction loads to equipment terminations and not just the thermal flexibility stressing of the pipe itself.[28] The determination and analysis of equipment reaction loads will in fact justify the need for detailed thermal flexibility and sustained longitudinal stress analyses for a considerable number of piping systems within a typical process plant. Recommendations in this regard would suggest that, as a minimum, *formal computer flexibility analyses* be performed for each of the following piping systems:

- Process, regeneration, and decoking lines to and from all fired heaters and steam generators
- Process lines to and from all compressors and all blowers
- All NPS 3 (DN 80) and larger lines connected to other rotating equipment, including pumps, steam or gas turbines, and mixers
- Main process and regeneration lines to and from all process reactors
- All lines NPS 4 (DN 100) and larger with a design temperature of 450°F (232°C) or more
- All lines NPS 8 (DN 200) and larger with a design temperature of 350°F (177°C) or more
- All lines NPS 12 (DN 300) and larger with a design temperature of 250°F (121°C) or more
- All lines NPS 20 (DN 500) and larger, regardless of design temperature
- All lines that contain expansion joints

- All lines with internal refractory lining
- All lines NPS 4 (DN 100) and larger connected to air-cooled heat exchangers
- All lines NPS 12 (DN 300) and larger connected to storage tanks

Other piping systems not covered by this list will still need to be evaluated using conventional thermal flexibility evaluation techniques to verify the acceptability of the planned layout and supporting arrangements.[29] Depending on the system, these screening evaluations may establish whether a more detailed computer flexibility analysis is required because of the complexity of the piping layout, and its interconnections with other piping or equipment involved. An example in this regard would be the tie-in of a new branch line to an existing piping system, where the thermal expansion effects of the new composite system need to be verified, and where the complexity of the system or the load sensitivity of the connecting equipment involved would justify a more detailed analysis.

Fabrication, Assembly, and Erection of Process Plant Piping

These topics are covered at length in Chap. A6 of this handbook. Detailed requirements which relate to fabrication, assembly, and erection of the process piping systems are given in ASME B31.3. Important phases of the Code treatment of these topics are covered briefly in this section.

Materials for Welding. All filler materials must comply with the requirements in Sec. IX of the ASME Boiler and Pressure Vessel Code.[30] If backing rings are used in services where their presence will result in severe corrosion or erosion, it is required that the backing ring be removed after welding and the internal joint ground smooth. When it is impractical to remove the backing ring in such a case, consideration should be given to welding without backing rings or to the use of consumable inserts or removable nonmetallic backing rings.

Welding End Preparation. ASME B16.25 provides dimensional standards for weld end bevels.[31] Preferably, the ends of pipe and the edges of plate used to form pipe should be shaped by machine. Other methods of shaping may be employed, provided that a reasonably smooth surface suitable for welding and free from tears, slag, scale, and grease is attained. Oxygen or arc cutting is acceptable only if the cut is reasonably smooth and true, and all slag is cleaned from the flame-cut surfaces.

If piping component ends are machined on the inside for backing rings, such machining must not result in a finished wall thickness, after welding, less than the minimum design thickness plus corrosion and erosion allowances.

Generally a root gap of ⅛ in (3 mm) is used for girth butt joints (including branch connections) without backing rings, except that where the pipe wall thickness is less than 3⁄16 in (5 mm), a 1⁄16 in (1.5 mm) root gap is generally used.

Welding Alignment Considerations. The following requirements should be considered in the final alignment of the completed welded connection for the type indicated:

- Radial misalignment at the joining ends of piping components should be limited to ⅛ in (3 mm) or ¼ of the pipe wall thickness, whichever is less. Internal radial misalignment exceeding 1⁄16 in (1.5 mm) should be taper trimmed so that the adjoining internal surfaces are flush. However, the resulting thickness of the welded joint should not be less than the minimum design thickness plus the specified corrosion allowance.

- Longitudinal seams in adjoining lengths of welded pipe should be staggered and located to clear openings and external attachments.
- Flange bolt holes should straddle the established centerlines unless other orientation is required to match the flange connections on equipment.
- Slip-on flanges should be positioned so that the distance from the face of the flange to the pipe end is about equal to the nominal pipe wall thickness plus ⅛ in (3 mm).
- Welding neck orifice flanges should be the same bore as the pipe to which they are attached and must be aligned accurately.

Welding Requirements/Procedures. Specific welding procedures are usually defined by the welding procedure specification (WPS). However, the following restrictions, limitations, or guidelines generally apply to the welding of process piping:

- Qualification of the welding procedures to be used and of the performance of welders and welding operators is required to comply with Sec. IX of the ASME Boiler and Pressure Vessel Code.
- Before welding, all surfaces must be cleaned and free from paint, oil, rust, scale, or other detrimental material. Furthermore, welding is prohibited if there is impingement of any rain, snow, sleet, or high wind on the weld area.
- Projection of weld metal into the pipe bore at welded butt joints should not exceed 1⁄16 in (1.5 mm) for pipe NPS 8 (DN 200) and smaller or ⅛ in (3 mm) for larger pipe. Excessive projections on accessible joints should be removed. Welds attaching welding neck orifice flanges to pipe should be ground smooth on the inside.
- The Code does not permit cracks in fillet or seal welds and limits undercutting to 1⁄32 in (0.8 mm) for these welds. Fillets welds may vary convex to concave.
- If *seal welding of threaded joints* is performed, the code requires that all exposed threads be covered by the seal weld and that the welding be done by qualified welders. In addition to the Code requirements, all threaded joints to be seal welded should be made without thread compound or PTFE tape. Seal welds should be at least two pass welds using a 3⁄32 or ⅛ in (2.4 or 3 mm) electrode, except a 5⁄32 in (4 mm) electrode is acceptable for NPS 2½ (DN 65) and larger pipe sizes.

The following Code requirements apply to *girth butt welds* and any *longitudinal butt welds* in piping components which are not made in accordance with a standard or specification.

- If the external surfaces of the two components are not aligned, the girth butt weld must be tapered between the two surfaces.
- Tack welds, if not made by a qualified welder using the same procedure as the completed weld, must be removed. Tack welds that are not removed should be made with an electrode which is the same as or equivalent to the electrode to be used for the first pass. Tack welds which have cracked must be removed.
- Peening (mechanical working) is prohibited on the root pass and final pass of a weld.

- No welding should be done if there is impingement on the weld area of rain, snow, sleet or excessive wind, or if the weld area is frosted or wet.

Preparation and Welding Procedure for Welded Branch Connections. Branch connections (including specially made integrally reinforced branch connection fittings) which abut the outside surface of the run wall or which are inserted through an opening cut in the run wall must be so arranged as to provide a good fit and attached by means of full penetration groove welds.

The recommendations for spacing and location of branch connections contained in Pipe Fabrication Institute (PFI) Standard ES7 should be followed.[32] A good fit must be provided between reinforcing rings and saddles and the parts to which they are attached. Reinforcing pads, when required, should be added as a subsequent fabrication step after visual inspection of the branch-to-header weld.

When rings or saddles are used, a drilled vent hole, minimum ⅛ in (3 mm), is provided at the side and not at the crotch of the ring of saddle to reveal leakage in the weld between branch and main run and to provide venting during welding and heat-treating operations. A pad or saddle may be made in more than one piece if joints between pieces have strength equivalent to the pad or saddle parent metal, and if each piece has a vent hole.

Defect Repairs. Weld defects that require repair must be removed. All repair welds must be made with the same welding procedure initially used for making the original weld.

Fabrication Tolerances for Welded Piping. A widely accepted tolerance on face-to-face and center-to-face dimensions of welding piping is ±⅛ in (3 mm). As for the location of the flanges, their lateral translation in any direction from the specified position should not exceed 1⁄16 in (1.5 mm). Also, the alignment of flanges should not deviate from the specified position, measured across any diameter, by more than 1⁄32 in (0.8 mm).

The tolerance for flange connections to rotating equipment or other load-sensitive equipment is typically specified to be much tighter, usually 1⁄32 to 1⁄64 in (0.8 to 0.4 mm) for the maximum translation or rotation of the flange, depending on the size of the nozzle connection.

Bending and Forming. Pipe may be bent by any hot or cold method consistent with material characteristics of the pipe being bent and the intended service. It may be bent to any radius that will result in a bend arc surface which is free of cracks and buckles. However, it is recommended that the centerline radius of pipe bends shall be equal to at least three times the nominal pipe diameter, and fabrication should be in accordance with ES-24, *Pipe Bending Methods, Tolerances, Process and Material Requirements*, of the Pipe Fabrication Institute.[33] Tighter bends approaching 1½ D are possible, such as that obtained with induction bending methods with appropriate heat treatment. Specific manufacturing experience and process procedures in these circumstances should be reviewed by the process plant owner, which is recommended in assessing cost incentives over more conventional pipe bends or elbows. Hot bending and forming must be done within a temperature range consistent with material characteristics, end use, or postweld heat treatment.

When pipe must be threaded before bending, forging, or heat treating, all exposed threaded surfaces should be protected during heat treatment.

Heat Treatment. Heat treatment is used to avert or relieve the detrimental effects of high temperature and severe temperature gradients inherent in welding, and to relieve residual stresses created by bending and forming. The welding procedure qualification describes the necessity for preheating and postweld heat treatment of welds (and the temperatures and soaking period to be used) in order to restore or obtain the physical properties of the materials (such as strength, ductility, and corrosion resistance) needed to satisfy end-use requirements. Specific requirements for preheat and post weld heating are provided by Sec. 330 and 331, respectively, of ASME B31.3.

In the case of dissimilar materials, the heat treatment of welded joints between dissimilar ferritic metals or between ferritic metals using dissimilar ferritic filler metal should be at the higher of the heat treatment temperature ranges specified by the Code for the materials in the joint. Heat treatment of welded joints including both ferritic and austenitic components and filler metals should be as required for the ferritic material or materials.

Cleaning After Fabrication. Following fabrication, all loose scale, weld spatter, slag, sand, and other foreign material should be removed from the piping. Piping Fabrication Institute (PFI) Standard ES-5, *Cleaning of Fabricated Piping*, is an acceptable standard for cleaning fabricated piping.[34] Piping is typically painted, at least primed, before leaving the fabricating shop (i.e., before it has been erected and tested). However, it recommended that all welded joints for buried piping systems or for piping within environmentally sensitive areas be left unprimed and unpainted for examination during pressure testing.

Bolting Procedure for Flanged Joints. Proper assembly of bolted joints is as important as proper welding in assuring leak-free performance of piping systems. Chapter A7 of this handbook provides a detailed discussion of bolted joints. For the majority of flanges, it is recommended that specific *bolt-up procedures* be developed, and that field personnel be qualified by assembling one or more joints, in much the same way as welding procedures and welder qualifications are handled. The selection of the proper technique of tightening the bolts of a flange joint is a complex process requiring experience and good engineering judgment. In addition, the successful application of any technique requires qualification of the tools to be used and the crew.[35] The following steps are recommended as a general approach to flange makeup:

1. Check studs and nuts for proper specification stamp. Check bolts or studs, nut threads, and nut contact face for cleanliness and burrs. Bolts and nuts should be cleaned using a wire brush and visually examined after cleaning to ensure that they are free from burrs.
2. Lubricate the bolt and nut threads uniformly on all contact surfaces, including the nut-bearing surface contacting the flange, with an appropriate high temperature colloidal nickel compound. The use of hardened steel washers is recommended under the nuts of bolts 1½ inch in diameter and larger.
3. Clean gasket seating surface on flange face using a wire brush (use stainless steel bristles on alloy components). Ensure that the surface is free from scratches, dirt, scale, remnants of old gaskets, and other protrusions. Flange faces with radial scratches or tool marks that form leakage paths should be refaced.
4. Check the alignment of the two mating flanges in the field to verify that it is within accepted fabrication tolerances. Alignment should be achieved by cutting and rewelding the pipe where possible. Excessive force should not be used to

move flanges into alignment, particularly for piping attached to machinery or other load-sensitive equipment.

5. Visually examine the gasket prior to installation to ensure that it is free from defects. Make sure the gasket type, size, and materials of construction are in accordance with the specifications.
6. Insert the gasket between the flanges carefully to ensure proper placement (centering in the joint), taking care not to damage the gasket. If absolutely necessary to use something to hold the gasket in place, a light spray of adhesive can be used. Alternatively, thin cellophane or masking type tape may be used on the outside edges of gasket with enough material protruding to allow removal during the initial tightening process. Tape should be located with care to avoid infringing on the flange face/gasket seating surfaces.
7. Install bolts and hand-tighten. Tighten bolts with qualified tools, torque or hydraulic stud tensioners, and procedures. Tightening of the bolts should follow usual crisscross sequential pattern to approximate uniform preload seating of the gasket.
8. A multipass tightening procedure should be implemented to ultimately tighten the bolts to the target bolt-preload stress.
9. Increase torque or hydraulic pressure to 100 percent of the value necessary to achieve the desired residual stress level. The majority of flange joints in process plants are assembled based on 50 ksi average preload stress using ASTM A 193 Grade B7 bolts. However, there are some combinations of flange type, rating, and bolting material for which lower bolt stress values are appropriate.
10. Depending on the critical nature of the flange service, consideration should be given to measuring the elongation (stretch) achieved in the bolt to verify the target bolt preload has been obtained and relatively uniform for all bolts of the flange. The use of bolt elongation measurements should be specifically considered as part of the qualification procedures of the boltup methodology, tools, and the work crew in achieving the required target preload.

The completed bolt loading should exert a compressive force of at least twice that generated by the internal pressure to compensate for not only the internal pressure, but for other factors including bolt and gasket relaxation effects, and possible bending loads which are imposed on the flange pair during operation.

Steel-to-cast iron flanged joints must be assembled carefully in order to prevent damage to the cast iron flange. Both flanges in steel-to-cast iron flanged joints should be flat-faced and full face gaskets should be used. These joints should be made up with extreme care, taking up on bolts uniformly after fitting flanges into close parallel and lateral alignment. Flanges that connect piping to mechanical equipment, such as pumps, turbines, or compressors, should be fitted up in close parallel and lateral alignment prior to tightening the bolting.

Bell and Spigot Joints in Cast Iron Piping. Bell and spigot joints in cast iron piping should be assembled using poured lead or other joint compound suitable for the service. Usually each cast-iron bell and spigot joint is packed with hemp, poured full of lead (with a minimum number of pours), and then caulked. The depression of lead below the face of the bell, after joint caulking, should not exceed ¼ in (6 mm). Lead wool can be used where it is not permissible to pour lead.

Threaded Piping. Any compound or lubricant used on threads must be suitable for the service conditions and compatible with both the service fluid and the piping materials. Threaded joints which are to be seal welded should be made up without any thread compound or PTFE tape.

Erection of Metal Bellows Expansion Joints. Metal bellows expansion joints should be installed as shipped from the manufacturer or compressed for the cold condition at erection depending on anticipated direction and magnitude of movement after the piping reaches operating temperature. The manufacturer's recommended total travel should preferably straddle the calculated travel. The bellows assembly of expansion joints in piping systems should be equipped with a removable external steel cover designed to protect the bellows from external mechanical damage. The cover should be designed so that it does not prevent the required thermal movement of the joint.

Erection of Valves. The manual operation of principal block and control valves should be checked to the extent practicable before they are fully installed within the system. In the case of gate valves, this should specifically check that the gate travel is in proper contact with the body seats when in the fully closed position. Similarly, the closure mechanisms of check valves should be checked to ensure good seat alignment and ease of operation. Valve packing glands should also be checked for the quality and quantity of packing, and lubricated plug valves should be provided with proper lubricant.

Erection of Pipe Supports and Springs Hangers. In addition to the major supports specified by the design drawings, minor supports as found necessary in the field should also be installed to prevent undesirable vibration, sag, lateral movement, or stresses. Spring hangers and pedestals, including the constant-support type, should be checked for proper adjustment of travel and be correctly positioned for the cold condition of erection. Springs should be provided with spring travel indicators and scales to allow the monitoring of these supports while in service from grade or nearby platforms.

Cleaning of Lines After Assembly and Erection. After the completion of erection, scale, dirt, welding electrodes, slag, and other foreign material should be removed from the lines. Particular attention should be given to the cleaning of air lines, equipment lubricating and seal-oil systems, and compressor, blower, pump, and turbine inlet piping.

All practical precautions should be taken to prevent the introduction of foreign matter into pumps, instruments, and other equipment. Cleaning may be accomplished by flushing out the lines. Temporary strainers should be used at pumps during the flushing operation unless spools or valves can be conveniently dropped out and suitable deflectors provided to prevent refuse from entering the pumps. Consideration should be given in dismantling those lines which cannot be adequately cleaned by flushing.

Examination, Inspection, and Testing

Prior to initial operation, a piping installation should be inspected to the extent necessary to assure compliance with the engineering design, and with the material, fabrication, assembly, and test requirements of the code. An employee representative of the owner should be responsible for this inspection. This examiner may delegate performance of any part of the inspection to inspectors who may be employees of his own organization, of an engineering or scientific organization, or of a recognized insurance or inspection company.

A nondestructive examination (NDE) plan should be consistent with service severity, incorporating process and mechanical factors. The NDE plan focus should be on those pipelines where failure would produce the most harm to personnel or property. Some issues that the designer should consider when developing the NDE plan are:

- *Service factors*: The hazardous natures of flowing media including their degree of corrosivity, toxicity, and flammability are some considerations to which the designer would want to apply a sound NDE program in order to detect flaws in these dangerous streams.
- *Mechanical factors*: Temperature, pressure, cyclic conditions, thermal bending stresses, and vibration can contribute to fatigued and highly stressed lines, which are more likely to fail than low stressed lines. Detection and removal of flaws can provide additional service life.

Visual Examination. Visual examination consists of observations by the examiner of whatever portions of a component or welds that are exposed to such observation, either during or after manufacture, fabrication, assembly, or testing. Sufficient materials and components, selected at random, need to satisfy the examiner that they conform to specifications and are free from defects.

Types of Examination. The following types of examination are or may be specified by engineering either when required by the Code or considered necessary because of special service conditions requiring a high degree of freedom from imperfections. If such examination is specified for a weld, it is only required that the weld examined be repaired, if necessary, so that the weld imperfections comply with the limitations in the Code for the type of examination used. ASME B31.3 requires certain NDEs be performed in accordance with the methods described in ASME Sec. V, Nondestructive Examinations.[36] If supplementary types of examination are specified they should be performed after completion of any postheat treatment where required. If any of the following types of examination are specified by the engineering design, they should be performed to the extent that follows:

- *Magnetic Particle.* Magnetic particle examination is essentially a surface-type examination, although some imperfections just below the surface are detectable. This type of examination is limited to materials which can be magnetized (hence it is not appropriate for austenitic stainless steels). An area to be examined by magnetic particle examination can be completely examined or examined on a random sampling basis, as specified.
- *Liquid penetrant examination.* Penetrant-type examinations are suitable for surface examinations only but are very sensitive. The most common case is a red dye penetrant with a white developer.
- *Random Radiography.* X-ray or gamma ray method radiography may be used. The selection of the method should be dependent upon its adaptability to work being radiographed. When random radiography of welds is specified by the engineering design, it should be done on the number of welds designated. The engineering design shall specify the extent to which each examined weld should be radiographed. Random radiography may also be used for examination of piping components such as a valve or fitting to any extent specified by the engineering design.

- *100 percent Radiography.* If 100 percent radiography is specified for welds in piping, each weld in the piping shall be completely radiographed.
- *Ultrasonic Examination.* Ultrasonic examination is used in piping for the detection of defects in welds and materials as well as for determining material thickness. The ability of UT to detect discontinuities depends a great deal on the part geometry and defect orientation. Therefore, the search technique must be carefully chosen to assure that it will cover all possible defect orientations.

Hardness Tests. The extent of hardness testing required shall be as specified by Code or by the engineering design, considering the severity of the service, type of material, and other pertinent factors.

Pressure Tests. Prior to initial operation, piping must be pressure tested to assure leak tightness. If repairs or additions are made following the pressure tests, the affected piping is retested, except that in the case of minor repairs or additions the owner may waive retest requirements. The pressure test is maintained for a sufficient time to determine whether there are any leaks but not less than 10 minutes.

Water is commonly used as the test fluid, except when there is a possibility of damage due to freezing, or if the operating fluid or piping material would be adversely affected by water. If hydrostatic testing is not considered practical, a pneumatic test using air or another nonflammable gas may be substituted. However, pneumatic testing involves the hazard of released energy stored in compressed gas. Particular care must therefore be taken to minimize the chance of brittle failure during a pneumatic leak test. Test temperature is important in this regard and must be considered when the designer chooses the material of construction.

Hydrostatic Pressure Tests. Hydrostatic tests are conducted at 1.5 times nominal design pressure, adjusted for temperature, per the following equation from ASME B31.3:

$$P_T = 1.5P\,\frac{S_T}{S}$$

where P_T = minimum test gage pressure
P = internal design gage pressure
S_T = allowable stress value at test temperature
S = allowable stress value at design temperature

If the test pressure as defined in the preceding equation would produce a stress in excess of the yield strength at test temperature, the test pressure may then be reduced to the maximum pressure that will not exceed the yield strength at test temperature.

Test Preparation. All joints, including welds, are to be left uninsulated and exposed for examination during the test. If a joint has been previously tested in accordance with the code it may be insulated or covered. Piping designed for vapor or gas shall be provided with additional temporary supports, if necessary, to support the weight of the test liquid.

Expansion joints shall be provided with temporary restraint, if required, for the additional pressure load under test or shall be isolated from the test.

Equipment which is not to be included in the test should be either disconnected from the piping or isolated by valves or blanks. If a pressure test is to be maintained for a period of time and the test liquid in the system is subject to thermal expansion, precautions must be taken to avoid excessive pressure buildup.

All pressure gages, gage glasses, flowmeter pots, liquid level float gages, and all other pressure parts of instruments, together with the piping connecting the instruments to the main piping, should be included in the hydrostatic test. Relief valves and rupture disks should not be subjected to the pressure test.

Pneumatic Testing. If piping is tested pneumatically, the test pressure is set at 110 percent of the design pressure, which is considerably less than the test pressure required by ASME B31.3, if tested hydrostatically. Pneumatic tests include a preliminary check at the lesser one-half the test pressure or 25 psig (172 kPa), and the pressure is then increased gradually in steps providing sufficient time to allow the piping to equalize strains during the test and to check for leaks. Again, particular care must be taken to minimize the chance of brittle failure during a pneumatic leak test.

Test Records. Records must be made of the tests, including date of test, identification of piping tested, test fluids, test pressure, and approval by inspector.

SPECIAL DESIGN PIPING SYSTEMS

Refractory Lined Pipe

Often elevated temperature pipelines or systems in erosive fluid solids service can be candidates for refractory lined piping systems. A principal application of refractory lined piping systems can be found in catalytic cracking units typical of most large refineries. A catalytic cracking (Cat) unit brings together a heavy feed and an active catalytic agent to produce lighter, more valuable petroleum products.[37] Catalytic cracking combines the action of heat and a catalyst to produce higher yields of motor fuels and other valuable products. In typical Cat units, the catalyst is fluidized and continuously circulated between a reactor vessel operating at around 1000°F (538°C) and a regenerator vessel where carbon is burned off the catalyst at about 1300°F (704°C). Operating pressures are usually well below 100 psig (690 kPa). The vessels and interconnecting reaction and regeneration piping are all refractory lined because of the economic material advantages that can be gained by applying thermal insulation on the inside of the vessel and pipeline rather than on the outside when very high operating temperatures are involved. Some of the immediate advantages include:

- Pipe wall (pressure boundary) temperature is considerably lower, thereby, allowing the use of lower alloy or carbon steel material at higher allowable stresses. In fact, process developments continue to push design temperatures to higher limits, upwards of 1300°F (704°C) and beyond, where refractory lined equipment and piping is the only feasible alternative to allow operation at these temperature extremes.
- Decreased thermal expansion will allow a tighter piping layout. However, as will be discussed in subsequent text, the refractory lining will significantly increase the stiffness of the pipe system, which needs to be considered in the thermal flexibility of the piping involved.
- Another advantage of refractory lined systems is the potential for improved erosion resistance, relative to bare steel, which is an important feature when fluidized solids processes are involved as in the case of Cat units.

These factors affect lower installed cost. The economic advantage becomes increasingly significant as temperatures, pressures, and pipe sizes increase.

The design of internally lined pipe entails a number of unique considerations. First, the effect of the process fluid on the thermal conductivity of the refractory needs to be considered. Low molecular weight gases, such as hydrogen, tend to permeate refractory linings. Influencing parameters include pressure, temperature, refractory density and composition, application techniques, and refractory cell structure. Empirical correction factors based on field experience have been developed for various processes and combinations of refractory types.

Selection of appropriate lining materials and design details are important to ensure a properly functioning system. Depending on service conditions, either a single layer or dual layer lining can be used. Some designs are depicted in Figs. C7.8, C7.9, and C7.10.

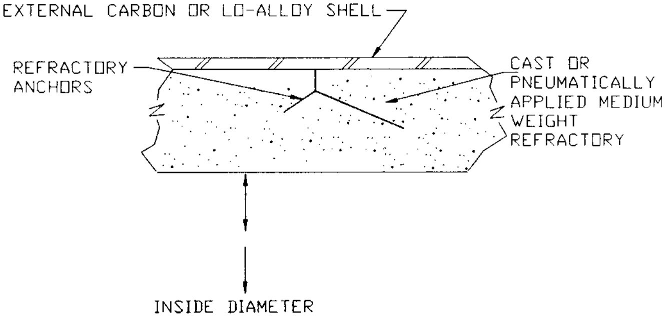
EXTERNAL CARBON OR LO-ALLOY SHELL
REFRACTORY ANCHORS
CAST OR PNEUMATICALLY APPLIED MEDIUM WEIGHT REFRACTORY
INSIDE DIAMETER

FIGURE C7.8 Single layer refractory lining for clean service.

An advantage of the dual layer is that the internal layer can be made of a relatively dense refractory with good strength and erosion-resistance properties without concern for insulating values. This thickness should be sufficient to prevent through-wall cracking and should reflect the minimum required for the anchoring detail specified.

The outer layer next to the pressure boundary pipe wall can be a light-weight

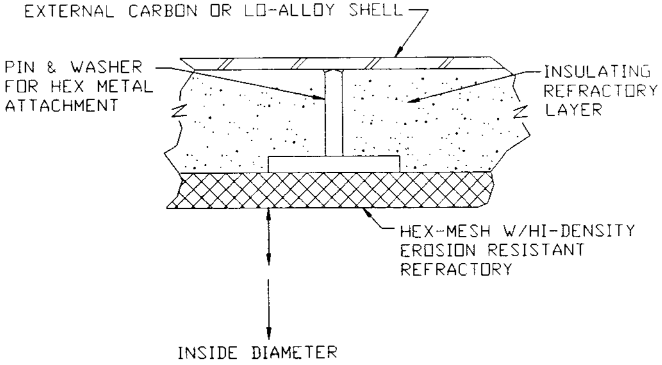
EXTERNAL CARBON OR LO-ALLOY SHELL
PIN & WASHER FOR HEX METAL ATTACHMENT
INSULATING REFRACTORY LAYER
HEX-MESH W/HI-DENSITY EROSION RESISTANT REFRACTORY
INSIDE DIAMETER

FIGURE C7.9 Dual layer refractory lining for erosive service.

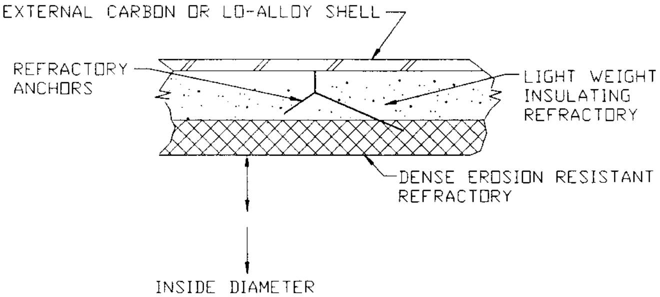
EXTERNAL CARBON OR LO-ALLOY SHELL
REFRACTORY ANCHORS
LIGHT WEIGHT INSULATING REFRACTORY
DENSE EROSION RESISTANT REFRACTORY
INSIDE DIAMETER

FIGURE C7.10 Dual-layer refractory lining for hydrogen-bearing streams.

refractory with good insulating properties to provide maximum temperature reduction. Various schemes for refractory installation have been used for dual-layer linings. See Figs. C7.9 and C7.10.

While the advantages of refractory lined pipe are quite apparent, the lining will significantly increase the stiffness of the piping. The stresses in the pipe will be higher, but more important, there will be much higher reaction loads at all equipment connections and thermal expansion restraints. The thermal flexibility analysis of refractory lined pipe is relatively complex and will typically require the use of computer tools with experimentally determined influence factors to account for the increased stiffness and line weight attributed to the refractory lining.

Typical applications for refractory lined steel shell transfer lines are again found in process applications when high temperatures, greater than 1000°F (538°C), and significant flow rates (and corresponding large diameter pipelines) are concurrent design parameters. In addition to catalytic crackers, there are other refinery services where high temperature fluid solids are involved, such as fluidized cokers and catalytic reformer processes, which will use refractory lined equipment and piping. Many such lines, for example, can be found in large refinery operations with diameters of NPS 60 (DN 1500) and larger that typically carry flue gases from regeneration vessels, cokers, and crackers. Transfer lines from certain thermal cracking type heaters are also typically refractory lined.

Jacketed Pipe

Jacketed pipelines (see Fig. C7.11 for typical construction) are commonly employed for conveyance of certain fluids in process facilities where external heating (usually by steam or other heating fluids) is required to maintain process temperatures under very controlled conditions. Process fluids that require stringent temperature control (i.e., molten sulfur) are good candidates for jacketed pipe applications. Molten materials (i.e., polymers) where high temperature maintenance is required are also candidate applications for jacketed pipe construction.

The advantages afforded by jacketed pipeline construction over other (i.e., tracing) heat transfer methods can be briefly described as:

- Uniformity of heat input around circumference of process pipe
- Tighter temperature control over entire pipeline length

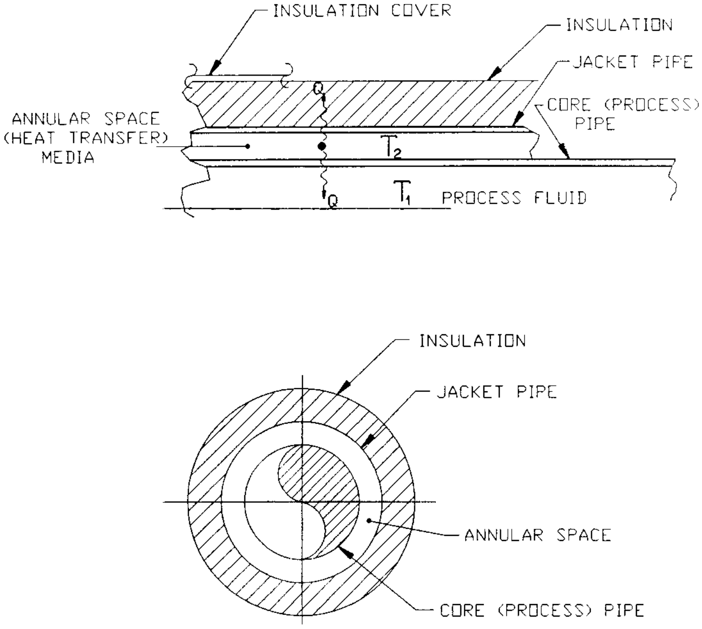

FIGURE C7.11 Heat transfer jacketed pipe.

- Elimination of "cold spots" that may cause process fluid degradation or localized freezing

Various heating media are used for temperature control of the process fluid. Liquid and vapor phase fluids are employed, each with their own specific advantages and design requirements.

Liquid Phase. As shown by Fig. C7.12, liquid-phase jackets are considered as circuits each having its own valved supply and return connections from the pipe header. The number of jackets included in a circuit is a function of heating medium heat loss, pressure drop through the jacket circuit, and position and location of the piping. As indicated in Fig. C7.12, fluid supply is introduced at the lowest tapping of a jacketed part; passes through the jacket and exits at the highest jacket tapping. This method of piping continues for the length of the circuit. Jumpers, as shown by Fig. C7.13, are used to carry the liquid across flanged connections. The fluid is then returned to the heater via the return header and a new connection from the supply main feeds the next circuit. Temperature of any circuit is controlled by throttling the quantity of fluid flowing to the jackets.

Vapor Phase. The number of jacket sections heated with a condensing vapor in any one circuit has the same considerations as liquid heating mediums. Unlike liquid phase heat transfer fluids, a jacketed pipeline heated with a condensing vapor (see Fig. C7.14) requires that the vapor inlet pipe be connected to the uppermost jacket tap rather than the lowest tap as in liquid heating. Jump overs, as shown by

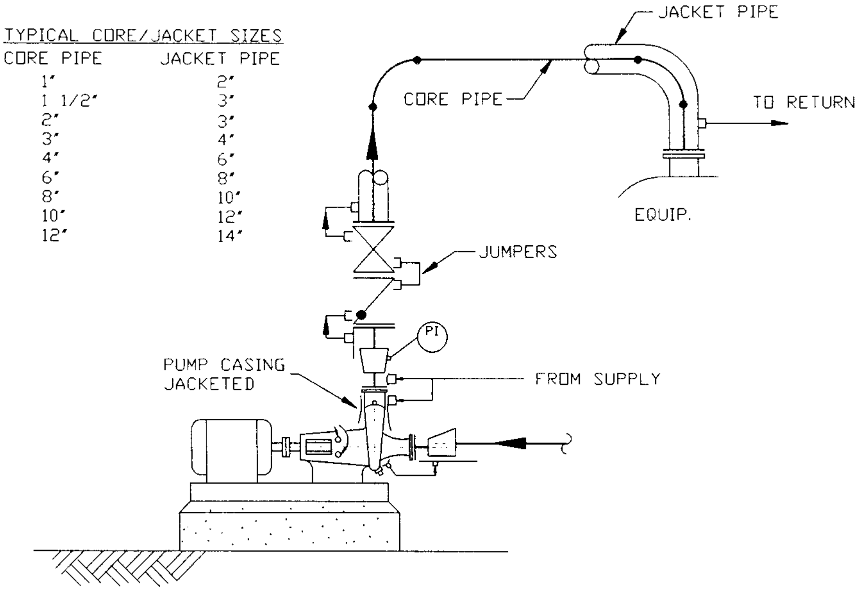
TYPICAL CORE/JACKET SIZES

CORE PIPE	JACKET PIPE
1"	2"
1 1/2"	3"
2"	3"
3"	4"
4"	6"
6"	8"
8"	10"
10"	12"
12"	14"

FIGURE C7.12 Jacket liquid phase—circuitry.

Fig. C7.15, carry vapor to the top of each section or flanged joint. The condensate is drained from each section or flanged joint, collected, and piped to a trapped common return header. Low pressure steam is typically the heating media of choice for most vapor jacketed piping systems.

Jacketed pipeline construction details vary depending upon process factors. When maximum heat transfer is desired, a full jacket is used (where the jacket pipe is welded to the back of oversize flanges). This technique will minimize any potential cold spots. Partial jackets are used for those services where product contamination or danger of hazardous conditions could arise if product and heating media could mix, or where temperature control is not critical and localized cold spots would not be detrimental to pipeline performance.

The design of integral jacketed piping needs to consider the increased stiffness resulting from the addition of the external jacket. As previously discussed for refractory lined systems, this will require sophisticated piping flexibility analyses

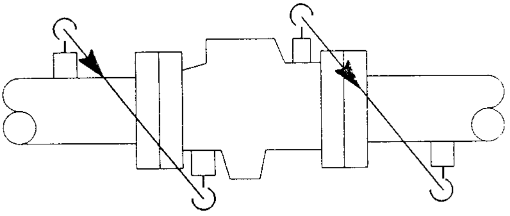

FIGURE C7.13 Jumper—liquid phase jacketed pipe.

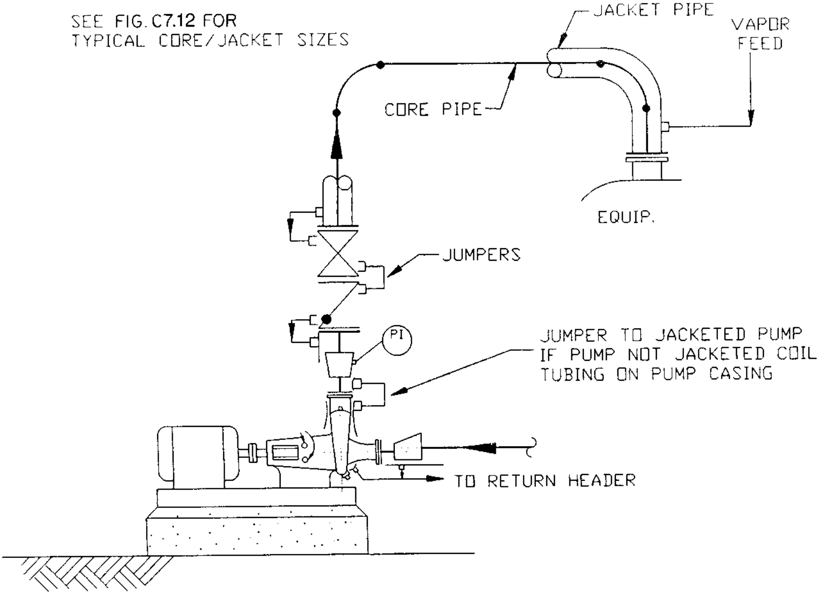
SEE FIG. C7.12 FOR TYPICAL CORE/JACKET SIZES
JACKET PIPE
VAPOR FEED
CORE PIPE
EQUIP.
JUMPERS
PI
JUMPER TO JACKETED PUMP IF PUMP NOT JACKETED COIL TUBING ON PUMP CASING
TO RETURN HEADER

FIGURE C7.14 Jacket vapor phase—circuitry.

to properly determine piping thermal flexibility stresses and imposed equipment loads that account for the increased stiffness of the integral jacketing construction.

Nonintegral or strap-on jackets are usually employed to provide a means of heat transfer to a pipeline component that may not be adaptable to integral jacketing (e.g., valve bodies). In all cases, the heat transfer distribution circuitry must be properly designed and installed for satisfactory performance.

Vacuum jacketed piping systems are employed to transfer cryogenic temperature

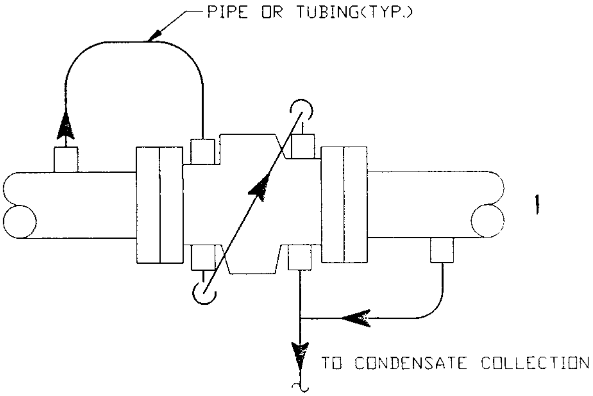
PIPE OR TUBING(TYP.)
TO CONDENSATE COLLECTION

FIGURE C7.15 Jumper—vapor phase jacketed pipe.

process fluids. The vacuum is established to minimize heat gain from the atmosphere to the cryogenic fluid. With the addition of external insulation little heat gain and resulting fluid vaporization will be realized. Cryogenic systems piping is covered in depth in Chap. C8 of this handbook.

Plastic Lined Pipe

Internal plastic liners are available in numerous materials that can be selected for use for a specific media. Some lining materials that are commonly used include PP (polypropylene), PVDC (polyvinylidene chloride), PTFE (polytetrafluoroethylene), FEP (perfluoro (ethylene-propylene) copolymer), ETFE (ethylene-tetrafluoroethylene), PFA (perfluoroalkoxy), and PVDF (polyvinylidene fluoride). Refer to Chap. B12 for details on plastic lined piping.

The properties of plastic-lined piping components permit these materials to be considered for the transportation of a variety of combinations and concentrations of fluids that are often very aggressive in normal steel piping systems.[38] Corrosion resistance is clearly a prime consideration for use of plastic-lined piping. However, there are other applications where plastic lined piping might be considered, including the following:

- Maintenance of process fluid purity, such as the processing of food products.
- Water treatment facilities and laboratory waste disposal systems.
- For secondary containment of dangerous, flammable, or environmentally damaging liquids. Because of its steel outer shell construction, the lined pipe will remain structurally self-supporting at higher temperatures and is less likely to rupture than solid plastic pipe.

Thermoplastic and thermoset resin piping systems are described in some detail in Part D, ‘‘Nonmetallic Piping,’’ of this handbook. Since these materials are not inherently fire safe, their application in typical refinery and chemical plant processes is very limited.

Glass and Glass-Lined Pipe

Borosilicate glass is used for specific piping services in the chemical and pharmaceutical industries. Some advantages afforded by glass piping are:

- Outstanding corrosion resistance for a variety of aggressive chemicals
- Smooth, pore-free surface
- Transparency
- Lack of product contamination effects, including those affecting taste, odor, and color
- Inertness

Glass lined piping components offer much of the same advantages afforded by solid glass piping and offer secondary containment, increased resistance to shock loads, and installed economics compared to other corrosion-resistant systems. The glass lining is extended from the pipe bore to cover the gasket seating areas of flanges. Gasket materials are typically limited to nonmetallic sheet gaskets suitable for the service to minimize compression seating forces exerted on the glass lined flange face.

SYSTEM LAYOUT CONSIDERATIONS

Piping arrangement and layout is discussed in depth in Chap. B3 of this handbook. This section will provide some important considerations in the design and layout of several of the more common types of piping systems found in process plants.

General Piping Arrangement

A general rule in piping layout is that lines should be located in as neat and orderly a manner (in groups or banks whenever practicable) as is consistent with economical design, pressure loss considerations, and satisfactory supporting arrangements. With the exceptions of water, drainage, and pumpout lines, the accepted practice on a process unit is to run the piping overhead, providing 7 ft (2.2 m) or more of clear headroom over walkways and platforms. Piping in a process unit should not be located at grade, especially in areas where frequent personnel traffic is likely.

All piping and equipment requiring regular attention of the operating and maintenance personnel should be readily accessible. Also, adequate clear working spaces, typically having a minimum width of 3 ft (1 m), should be maintained around equipment such as pumps, heat exchangers, control valves, instruments, and tower manways, which require frequent servicing. Consideration should be given to providing lateral and vertical clearance for the use of motorized materials-handling and crane equipment in maintenance work. To the extent practicable, principal valves should be located so they may be replaced and operated from grade, permanent platforms, or small portable platforms. If the bottoms of the handwheels are more than 6 ft above a platform or grade level, or if otherwise inaccessible, the valve should be equipped with extension stems or chain operators.

High temperature lines in a process plant pose problems for other piping and equipment. For example, hot lines, with temperature higher than 100°F (38°C), should be routed so as to avoid electrical conduits. Steam and condensate should not be discharged into the ground in the vicinity of electrical conduits. Lines containing corrosive chemicals should not be located near hot lines or other sources of heat.

Pressure Vessel (Reactors/Towers/Drums) Piping

The piping designer is cautioned that often limitations concerning piping connections at vessels are detailed in Sec. VIII of the ASME Boiler and Pressure Vessel Code. This would typically include piping between the vessels protected by the same relief valve, and piping between a vessel and its pressure relief safety valve. The piping designer should coordinate piping requirements with the vessel designer to achieve the optimum nozzle locations.

In the case of tall vertical reactors and most towers, the piping will be supported directly off the vessel as shown, for example, by Fig. C7.16. For economy and ease of support, piping in these situations should drop or rise immediately upon leaving the tower nozzle and run parallel along the side of the vessel as close as reasonably possible to limit wind-imposed loadings to the vessel nozzles. Thermal flexibility provisions will need to consider the differential thermal expansion between the vessel shell and the piping being supported.

Connections off the bottom head of skirt supported vertical vessels should locate the nozzle flange outside of the skirt. This minimizes the possibility of flange leakage within the confined spaces of the vessel skirt. Hence, bottom nozzles are usually

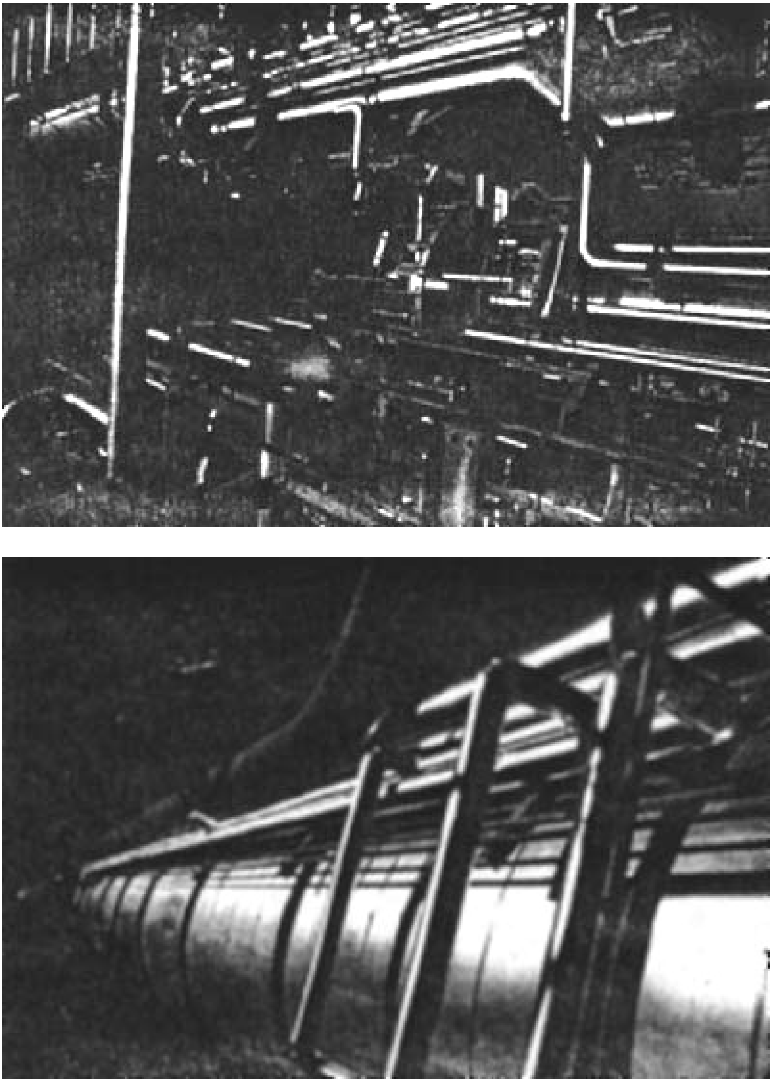

FIGURE C7.16 Typical tower piping layouts.

angled in these cases to locate the nozzle flange just outside of the skirt. Piping flange connections in general should be avoided within the vessel skirt.

The location of isolation valves should consider the possible rupture of a line connected below the vessel liquid level (or to the dense phase in a fluid-solids vessel), which could drain the vessel unless there was a valve to stop the drainage. In deciding whether these valves are needed, the likelihood of mechanical damage to the line will be the prime consideration. Small lines, NPS 2 (DN 50) and smaller, are obviously more susceptible to damage than large lines, and hence are most often supplied with suitable isolation valves.

Compressor Piping

Special precaution is necessary in the design and fabrication of the piping at or near compressors, especially for reciprocating compressors, to reduce fatigue failures. This piping should be designed to have the minimum of overhanging weight. This is mostly a problem with high pressure compressors, where valves are very heavy. Butt welding fittings should be used wherever practical, and fit-up should be accurate. Braces should be provided as needed to reduce vibration, and consideration should be given to grinding all welds to remove surface discontinuities.

Reciprocating Compressors. Means to reduce excessive surge and vibration should be provided as necessary in the suction and discharge lines of all reciprocating compressors, and located as close as practical to the compressor. In the case of most reciprocating process compressors, pulsation suppression devices are installed at the suction and discharge flanges of each compression stage. Pulsation suppressors are not typically required at the air intake suction of an air compressor, or at the interstage of an integral interstage cooler unless pulsations are expected to occur. Where surge chambers are provided, the connecting pipe should extend into the bottom of the chamber.

The need for detailed pressure pulsation analysis and for acoustic simulation and mechanical vibration analyses should be considered for reciprocating compressor systems to confirm the acceptability of proposed suction and discharge piping layouts and support/restraint locations needed to contain the pressure pulsation vibrations generated by the compressor. The composite compressor piping system needs to be designed so that it avoids acoustical natural frequencies in the system which coincide with the natural mechanical frequencies of the piping or the lower range of compressor harmonic frequencies. Special hold-down supports and thermal expansion restraints are typically required for reciprocating compressor piping systems even with pulsation bottles installed off the suction and discharge nozzles of the compressor.[39] Acceptance criteria for nozzle loads are provided by API Standard 618, *Reciprocating Compressors for Petroleum, Chemical, and Gas Industry Services*.[40]

Centrifugal and Rotary Compressors. A check valve should be installed in the discharge line from any centrifugal or rotary compressor discharge into a system from which the fluid may flow backward through the compressor. The check valve should be located as close as possible to the compressor.

When a compressor takes suction from a header, the suction lateral should preferably be connected to the top of the header. However, if the lateral is at least one pipe size smaller than the header, it is permissible to make a centerline connection to the side of the header. Temporary screens should be provided for initial compressor start-up and should be located as close as possible to the compressor unless permanent screens or filters are installed immediately adjacent to the compressor.

The flow characteristics of centrifugal compressors should be investigated to determine whether devices are required to prevent surging during start-up. Knockout drums should be provided upstream of all compressors except those which handle gases with no possibility of condensate being formed. That is, most air and nitrogen compressors do not require knockdown drums. Compressor suction lines between the knockdown drum and the compressor should be as short as possible, without pockets, horizontal, and sloped toward the compressor. Also, for wet gas compressors, this portion of the suction line should be insulated. It may require auxiliary heating in the form of heat tracing to prevent condensation. Where the line between the knockdown drum and the compressor is long, low points in compressor suction lines should be provided with drains to remove any possible accumulation of liquid. If the suction line normally operates under vacuum conditions, all drains between the knockdown drum and the compressor should discharge into the knockdown drum.

Compressor discharge piping should be analyzed for flexibility under thermal load resulting from the heat of compression. Flexibility analyses will be needed for all centrifugal compressors to confirm the acceptability of the combined loads imposed on the compressor nozzles in accordance with the requirements of API 617, *Centrifugal Compressors for Petroleum, Chemical and Gas Industry Services*.[41] This standard also provides acceptance criteria for axial compressor piping.

The fabrication of suction and discharge piping requires stringent flange alignment tolerances at the compressor nozzle connections to avoid excessive loads imposed on the machine. Maximum permissible flange rotations and lateral translation tolerances of 1⁄64 in (0.4 mm) is not uncommon for this purpose, which can represent a challenge for relatively large [equal to or greater than NPS 12 (DN 300)] suction and discharge piping.

Pump Piping

Permanent strainers should be provided upstream of pumps handling streams which are likely to contain foreign material such as sand and scale. Temporary strainers, preferably of the cone type, should be provided for initial unit start-up where permanent strainers are not provided, and should be located as close as possible to the pump suction nozzle. A block valve should be provided in the suction line of each pump and located upstream of the strainer. For dirty streams, where two or more pumps take suction from a single header, the block valves should be located as close as is practical to the header to minimize the collection of dirt upstream of the valve.

A block valve should be provided in the discharge line of each pump. A check valve should be installed in the discharge line of each centrifugal or rotary pump unless there is no possibility of a reversal of flow or pressure surge under any condition. The check valve should be located between the pump and the block valve with a drain between the block and the check valve.

Pump Piping Layout Considerations. Most pump installations in process plants have spare units to assure continuous operations by switching to a standby pump if required for maintenance. Pump piping, especially for high temperature service, generally represents one of the more difficult systems to design for thermal flexibility.

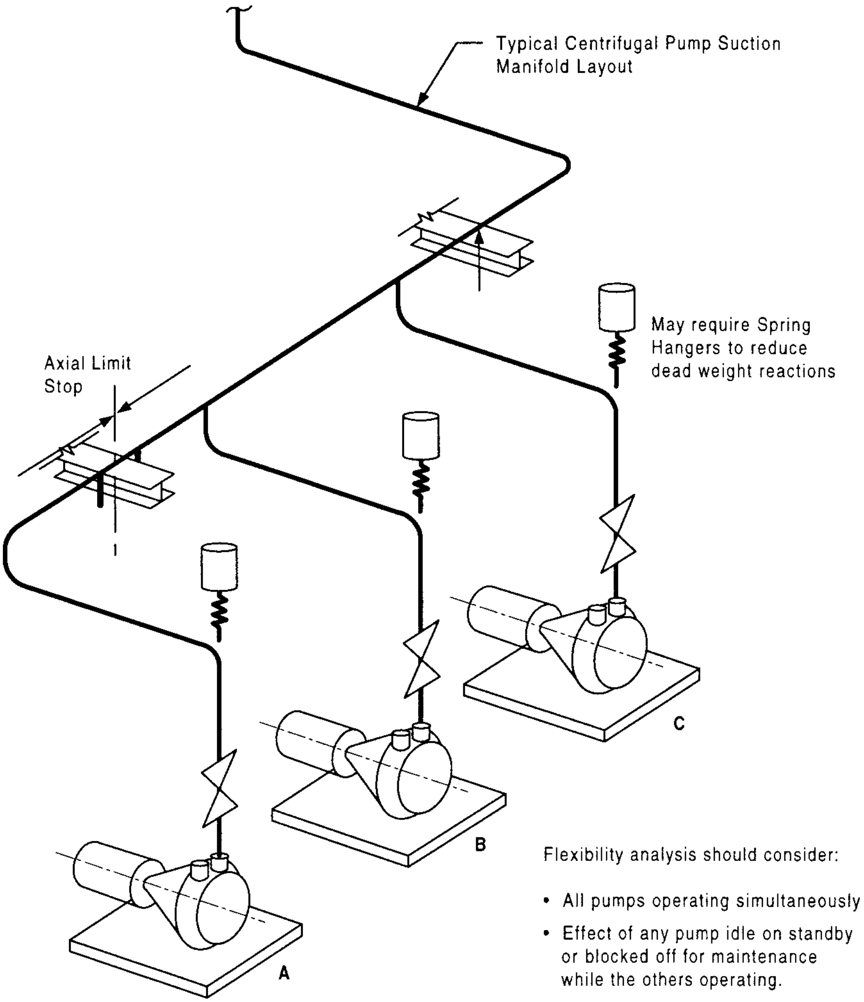
Typical Centrifugal Pump Suction
Manifold Layout
May require Spring
Hangers to reduce
dead weight reactions
Axial Limit
Stop
C
B
A
Flexibility analysis should consider:
• All pumps operating simultaneously
• Effect of any pump idle on standby
or blocked off for maintenance
while the others operating.

FIGURE C7.17 Typical piping layout for spared pump service.

A typical piping layout for the suction of a 3 centrifugal pump system is shown in Fig. C7.17. The piping design needs to consider the various operating scenarios possible between operating and idle pumps, along with all pumps operating simultaneously. Thermal flexibility analyses of this system will need to consider all of these operating cases to confirm the acceptability of the worst scenario reaction loads imposed on the pumps. This needs to consider simultaneously acting operating or standby temperatures for each of the pump piping branches.

Nozzle load limits must be satisfied for combined thermal, dead weight, and friction loads. Spring supports are often needed near the pumps to reduce the dead weight loads on the nozzle connections. Directional restraints (e.g., axial limit stops and lateral guides) are also typically needed to prevent excessive thermal and friction loads on the pumps to control thermal expansion loads imposed on the pumps. Recommended acceptance criteria for nozzle reaction loads imposed on centrifugal pumps is covered by API Standard 610, *Centrifugal Pumps for Petroleum, Heavy Duty Chemical, and Gas Industry Service*.[42] And, in the case of reciprocating pumps, acceptance criteria is provided by API Standard 674, *Positive Displacement Pumps—Reciprocating*.[43]

As in the case of compressors, flange alignment between mating pump nozzle and piping flanges is very important and must be achieved to close tolerances to avoid excessive loads imposed on the pump. Concerns in this regard can lead to coupling misalignments between the pump and its driver, which can result in operating and subsequent maintenance problems.

Warm-up of Standby Pumps. Pumps that may be idle during plant operations and need to be started quickly should be provided with warm-up lines if pump design temperature exceeds 450°F (232°C), or if the process fluid will solidify at ambient temperature. The purpose of these warm-up lines is to eliminate undesirable thermal effects on lines and equipment and plugging of idle pump and piping materials. A typical warm-up line consists of an NPS ¾ (DN 20) valved bypass around the pump discharge block and check valves. The standby pump should be kept near to operating temperatures by opening the warm-up lines and by providing a suitable bypass around the discharge block and check valves to permit a small flow back through the idle pumps.

If the process fluid will solidify at ambient temperature, and the suction and discharge lines are not heated and insulated, an additional NPS ¾ (DN 20) valved bypass should be provided from the discharge lateral to the suction lateral and the header side of the valves. When the pump is removed from service, these laterals should be kept at operating temperature by opening this bypass valve to permit a small flow. The above warm-up lines should be heat-traced if the process fluid will solidify at atmospheric temperature. Pump systems with warm-up lines should be checked for adequate flexibility for the differential expansion between the pump discharge line and the warm-up line.

Low-Flow Protection. When the discharge line contains a quick-closing valve, the necessity for shock-absorbing equipment should be investigated if the closing time of the valve cannot be increased to a safe level. Where a remotely located valve can be closed against the pump and the pump does not shut off automatically or cannot be shut off immediately, a recirculating line should be provided from the pump discharge back to the point of suction. The purpose of recirculating the fluid is to prevent damage to the pump due to overheating. A low-flow protection system should be installed for pumps expected to operate at a flow less than the minimum continuous stable flow or minimum continuous thermal flow as defined by API 610. The minimum size of the recirculating line should be NPS ¾ (DN 20). The line should be equipped with at least one gate valve and an orifice sized to restrict flow to the minimum pumping rate of the pump.

Fired Heater Piping

Piping of interest for fired heaters consists of the inlet feed and outlet transfer lines typically from the radiant section. It also includes piping to and from convection section headers or cross-overs between the convection and radiant sections. Decoking piping systems and burner fuel lines are also of interest.

The design of principal inlet and outlet piping for large heaters usually needs to consider the thermal expansion, and restraints and supporting details, of the main inlet and outlet collection headers for the radiant section tubes. The thermal expansion movements of these components need to be reflected in the thermal flexibility analyses of the connecting piping, or better yet, to incorporate the headers in the analysis of the system. Spring supports are often required for this piping because of the relatively high operating temperatures and resulting thermal expansion.

Steam-Air Decoking. Permanent steam-air decoking methods for cleaning coke buildup from heater tube internal surface connections should be considered on heaters requiring frequent decoking and where installation of a temporary steam air header would necessitate considerable dismantling of the process piping. On heaters with parallel coils (passes), blanks are required to separate the coils for decoking connections. Dropout spools or blanks should be provided for all decoking operations which are also installed for steam out. The alternate to steam air decoking is to provide sufficient flanged fittings for mechanical decoking. Thermal flexibility analyses of furnace transfer lines should consider the decoking line connections if permanently piped and checked for both normal operation and decoking.

Fuel Gas Burner Piping. All fuel gas supplied to heaters should pass through a dry drum which is located as close as practical to the heaters. The supply main, the branch lines, and the distribution headers between the dry drum and the heater should be pitched downward in the direction of flow and be without pockets. If this is not possible, a condensate leg with a valved and plugged drain connection should be provided at the low point. Branch lines should be connected to the top of the header. A remotely controlled or a remotely located block valve should be provided in the supply line of each heater. Wherever heater outlet temperatures are controlled by regulation of the fuel supply, automatic fuel-regulator valves should be provided upstream of the distribution header. Each gas burner should be supplied with a steel shutoff valve installed in a position such that a person operating the valve will not be in close contact with the aspirator.

Fuel Oil Burner Piping. For heaters using fuel oil, the burner oil piping system generally consists of a burner oil storage tank, a burner oil pump and oil supply main with a strainer, branch line to each heater, a distribution header at the heater, and an oil return main back to the storage tank. Circulating fuel oil lines should be sized to carry 200 percent of the maximum design fuel load of the heater. A remotely controlled or a remotely located block valve should be provided in the supply main or in the branch lines to each heater, and shutoff valves should be provided between the firing valves and the headers. Fuel-oil lines should be sloped from the burner shutoff valves toward the burners to provide natural drainage. A pressure-reducing valve should be installed as close to the heater as practical and upstream of the burners to regulate the pressure at the burners. A recirculating bypass should be provided between the branch line to the distribution header and the return branch line from the distribution header.

The atomizing piping system used in conjunction with the burner oil consists of a branch line from a live steam main, and a distribution header around each burner. Branch lines should have a capacity of approximately twice the combined steam requirements of all burners supplied by the branch. Steam traps should be provided on the atomizing steam header where necessary to prevent water from reaching the burners.

Heat Exchanger Piping

Shell and tube, double pipe, plate frame, and air-cooled type heat exchangers are all well utilized in most process plants. Piping systems for these exchangers, especially for air-fin coolers, require particular attention to confirm the acceptability of imposed nozzle loads.

Generally, bypass piping around exchangers is provided for temperature control and to allow cleaning during operation of the rest of the process unit. There may be cases when the increase in operating efficiency resulting from cleaning or repair during the operation of the rest of the process unit would justify the cost of installing a bypass. Block valves need not be provided on the process side of the exchanger except where the valve is needed for flow control or where the exchanger may be bypassed while the unit is running. Typically, streams which are to be heated should enter at the bottom of the exchanger, and streams to be cooled should enter at the top of the exchanger.

Air-Fin Cooler Exchangers. The inlet and outlet piping to air-cooled exchangers can represent a significant design challenge, especially for large multibundle units operating at relatively high temperatures. Figure C7.18 shows two typical approaches for the design of piping manifolds for air-cooled heat exchangers, which use different layouts for the lateral connections (flexible versus stiff lateral designs) between the air-cooled header and the manifold headers. Both approaches need to satisfy the requirements of API Standard 661, *Air-Cooled Heat Exchangers for General Refinery Services*, for imposed reaction loads to the header nozzles.[44]

With flexible laterals, the differential thermal expansion between the individual air-cooled heat exchanger bundles and the connecting manifold header is accommodated by providing sufficient flexibility in each of the piping laterals. The thermal movements of the air-cooled exchanger bundles must be considered. The bundles are usually anchored at the inlet header to control the direction of the tube axial expansion.

With stiff laterals, a single manifold has short, stiff connections to the air-cooled exchanger. The bundles are allowed to move laterally to accommodate the axial thermal expansion of the piping manifold header. The lateral nozzle connections must be as short as possible to move the air-cooled bundles without overstressing the nozzles or the manifold connections. The flexibility analysis of this approach is relatively complex since it must consider the restraining effect of friction in attempting to move the bundles laterally. It also must consider the stiffness effects of the exchanger tubes, which resist the free lateral movement of the bundles.

The stiff laterals approach will typically result in lower material costs. However, this approach requires special construction procedures to achieve proper fit and alignment between the header nozzles of all the exchanger bundles. This typically requires the field fabrication of the manifold and the laterals directly off the installed air-cooled exchangers. There also needs to be sufficient clearance between air-cooled headers and side frames to allow for the thermal expansion of the manifold.

Other Exchangers. A pipe spool, elbow, or some such removable piece (other than the block valve) should be provided adjacent to the channel section of any exchanger which will be opened while the unit is in operation. Lines to condensers

A. Flexible Laterals Approach for Typical Air-Cooled Exchanger Inlet Manifold

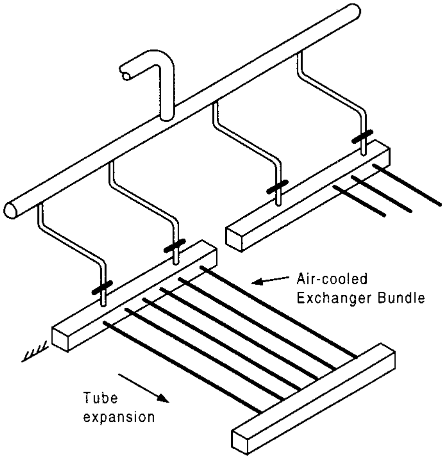

- Design permits independent movement between air-cooled exchanger bundle andpiping manifold
- One end of exchanger bundle is typically anchored to control the direction of tube expansion.

B. Stiff Laterals Approach

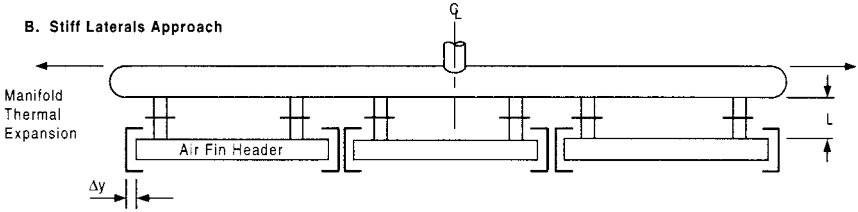

- Bundles designed to slide in lateral direction to take up thermal expansion of the manifold.
- Make lateral connections, L, as short as possible so relatively stiff to avoid overstress in forcing header movement.
- Check for adequate clearances between the air fin header and side frames.
- Field fabrication of the manifold and laterals is usually required because of the short multiple nozzle connections off the air-cooled exchangers.

FIGURE C7.18 Alternative design layouts for air-cooled exchanger manifiolds.

should be sized to provide sufficient velocity to carry condensed liquids along with the vapors. Pockets must be avoided in these lines.

Heat exchanger lines which enter or leave the exchanger from a bottom nozzle need to be supported in such a way that the vertical expansion of the line between its first support and the exchanger does not overload the nozzle connections. The preferred layout design locates the first line support at about the same elevation as the midpoint of the heat exchanger saddle support. This balances the thermal expansion between the exchanger and the first pipe support.

Storage Tank Piping

The loads transmitted from piping to shell nozzles of large-diameter storage tanks are a major concern for tank designers. The loads which must be considered in the design of principal piping connections to tank nozzles include the following:

- Tank shell radial movements and nozzle rotations while filling and emptying a tank
- Design pressure of the pipe
- Thermal expansion of piping
- Differential settlement between the tank and the piping supports
- Weight of piping, valves, and contents

Stresses in the pipe caused by these load combinations should satisfy the ASME B31.3 Piping Code. Moment loads and resulting local stresses should also be checked in the tank nozzle and its connection to the tank, as covered by API Standard 650 for *Atmospheric Storage Tanks*.[45]

Figure C7.19 provides some examples of typical piping configurations that deal with the load conditions discussed in this section. For most systems, there is an advantage in locating the first horizontal bend of the line as close as possible to the tank nozzle. This provides for tank shell nozzle rotation through torsion in the leg of horizontal piping after this first bend. Depending on the level of predicted tank settlement, which can approach 12 in (305 mm) or greater over the life of the tank, spring hangers may be required for the supports nearest to the tank.

Process unit feed tanks should have separate filling and discharge piping systems to avoid sending slugs of water to the process units. Separate discharge and suction connections are specifically required if it is necessary to have facilities for recirculation or blending and there is no mixer in the tank. Block valves should be provided on all nozzle connections below the tank liquid level. Filling lines for tanks containing flammable fluids should discharge near the bottom of the tank without free fall because of the danger of static electricity being created.

Rack Piping

A *pipeway* is the space allocated for routing several parallel adjacent pipelines within process plants. A *pipe rack* (see Fig. C7.20) is the structure employed for carrying the pipelines and electrical and instrument trays. The pipe rack is usually constructed of steel or concrete frames called *bents*, on top of which the pipeline rests.

Pipe racks are necessary for arranging the process and service pipelines throughout the plant, and they are used in secondary ways; principally to provide a protected location for auxiliary equipment, pumps, utility stations, manifolds, and fire fighting and first-aid stations. Lighting and other fixtures can be fitted to the pipe rack columns. Air-cooled heat exchangers are often supported above pipe racks for economy of plot space.

Some other considerations when arranging piping on pipe racks are:

- Place utility and service piping on upper level of double-deck pipe racks.
- Do not run piping over columns as this will prevent adding another level.
- Locate large liquid-filled pipelines near columns to reduce bending stresses on pipe rack beams.
- Allow space for future piping systems; usually about 25 percent of final width.
- Electrical and instrument trays are best placed on outriggers or brackets to prevent interference with pipes leaving the pipe rack.
- Adjust elevation (up or down) of horizontal lines when making a change in direction. This will avoid blocking space for future lines.

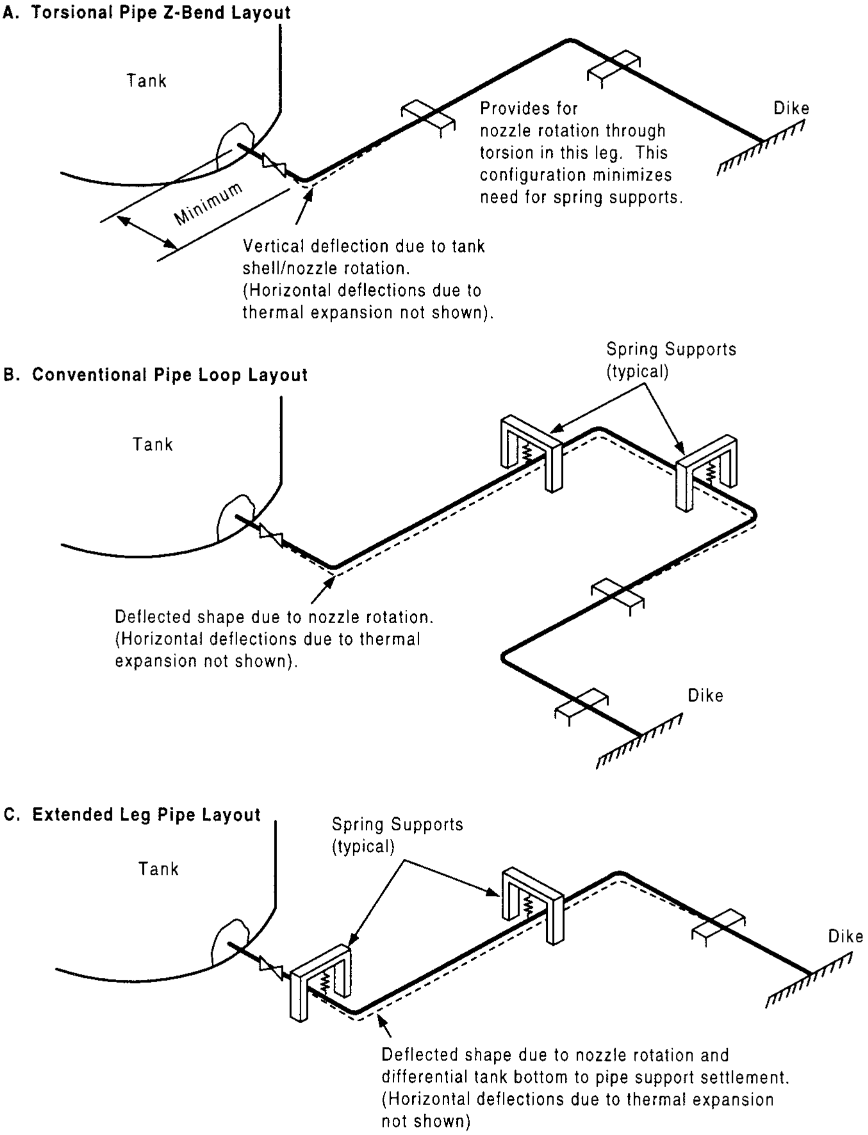

A. Torsional Pipe Z-Bend Layout

Tank
Minimum
Provides for nozzle rotation through torsion in this leg. This configuration minimizes need for spring supports.
Dike
Vertical deflection due to tank shell/nozzle rotation. (Horizontal deflections due to thermal expansion not shown).

B. Conventional Pipe Loop Layout

Spring Supports (typical)
Tank
Deflected shape due to nozzle rotation. (Horizontal deflections due to thermal expansion not shown).
Dike

C. Extended Leg Pipe Layout

Spring Supports (typical)
Tank
Dike
Deflected shape due to nozzle rotation and differential tank bottom to pipe support settlement. (Horizontal deflections due to thermal expansion not shown)

FIGURE C7.19 Tank piping layout considerations.

- Piping can be supported on sleepers at grade if roads or walkways will not be required over the pipeway at a later date. Bottom of pipe elevations must allow for clearance under line drain valves.
- Minimum clearance under the pipe rack is a function of the available mobile lifting equipment requiring access and the minimum vertical clearance determined by the basic plant design parameters.

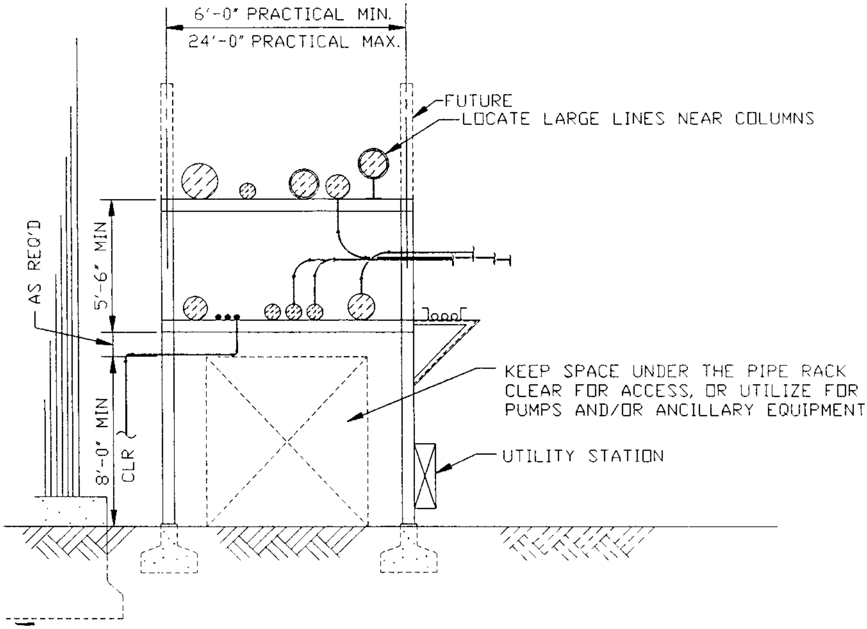
6'-0" PRACTICAL MIN.
24'-0" PRACTICAL MAX.
FUTURE
LOCATE LARGE LINES NEAR COLUMNS
AS REQ'D
5'-6" MIN
8'-0" MIN
CLR
KEEP SPACE UNDER THE PIPE RACK CLEAR FOR ACCESS, OR UTILIZE FOR PUMPS AND/OR ANCILLARY EQUIPMENT
UTILITY STATION

FIGURE C7.20 Typical pipe rack cross section.

An important aspect of rack piping design is the strategic location of line stops or anchors and guides to control the thermal expansion of the piping. Directional line stops also help to distribute expansion forces and support friction loads. Pipe expansion loops may be required for long lengths of rack piping, especially in elevated temperature service. The structural design of the rack bents must consider the combined loads imposed by the simultaneous operation of the piping it supports. Some percentage, usually 25 percent, of all the lines supported off a bent are assumed to simultaneously load the rack, since it is highly unlikely that all lines will be subjected to thermal expansion at the same moment in time.

Axial thrust loads in long horizontal runs, which are typical of rack piping and lines outside of process units, will be significant due to static friction resistance to thermal expansion at the support points. These thrust loads should not exceed the critical buckling load of the line involved. Lateral guides are usually necessary to give stability to the line.

Relief Valve and Flare Header Piping

Relief valve piping in a process plant should be in accordance with API RP 520, *Recommended Practice for the Design and Construction of Pressure Relieving Systems* and API RP 521, *Guide for Pressure Relief and Depressuring Systems.*[46,47] Piping for relief valves protecting pressure vessels should be in accordance with the applicable requirements of Section VIII of the ASME Boiler and Pressure Vessel Code.

The discharge of all pressure relief valves should be piped to a safe place for disposal. Liquid and readily condensable hydrocarbons are usually discharged to a closed system. Pressure relief valves discharging light hydrocarbons which are not likely to condense or accumulate at grade can frequently be safely vented to the atmosphere from the tops of tall towers. Discharging to the atmosphere reduces the size and cost of closed piping systems otherwise required and is the preferred method where it does not create a hazard and where recovery facilities are not necessary. The term *closed system* refers to the typical pressure relief valve collecting system at a process unit, wherein the discharge of pressure relief valves is collected in a piping system for disposal at a safe location. A *blowdown drum*, which may be integral with a vent stack, is usually provided for separating the vapors and collecting liquids. Vapors are typically vented to the atmosphere through a *flare stack* to safely ignite the combustible gas. Frequently this system is combined with any required facilities for emergency blowdown or depressurizing of equipment.

Pressure Relief Valve Piping Design

Block valves are usually provided upstream (and downstream if discharging into a closed system) of pressure relief valves where necessary to permit onstream isolation and maintenance of the PR devices without interrupting process unit operations. Where block valves are used, the installation should conform to the requirements of Section VIII of the ASME Boiler and Pressure Vessel Code when protecting an unfired pressure vessel. These valves are typically installed so that they are car-sealed open (CSO). Mechanical interlocks or key systems are usually required for spared PR valve installations to help ensure continuous safety protection of the system.

Generally, the most difficult and important feature associated with sizing relief valve discharge lines and headers is the determination of the maximum probable flow. The flow is based on the number of valves which may discharge simultaneously owing to a fire or to abnormal process conditions. To do this, the layout of the unit must be considered along with many possible abnormal operation conditions.

The permissible back pressure must also be determined. Generally, the back pressure should not exceed 10 percent of the set pressure for unbalanced safety valves. Balanced pressure-relief valves will operate satisfactorily at higher back pressures (approximately 30 percent of the set pressure), and consequently their use will sometimes result in a more economical relieving system.

Pressure relief valve discharge piping should be sized so that any back pressure that may exist or develop will not reduce the capacity of the pressure relief valve below that required to protect the equipment. Regardless, the discharge piping for each pressure relief valve should not be smaller than the nominal pipe size of the pressure relief valve outlet.

For gas, vapor, or flashing liquid service the inlet piping pressure drop at design flow should not exceed 3 percent of the safety relief valve set pressure. Nor should the inlet piping to a pressure valve be smaller than the valve inlet nominal pipe size. The inlet piping includes all piping between the protected equipment and the inlet flange of the valve. Excessive pressure drop in the inlet piping will cause *valve chatter* (extremely rapid opening and closing of the valve) which may lower the valve capacity and damage valve seating surfaces.

Pressure relief valves should be located so that the inlet piping is short and direct and self-draining with no pockets. However, on installations where pressure pulsations or turbulence are likely to effect the pressure relief valve (e.g., discharge

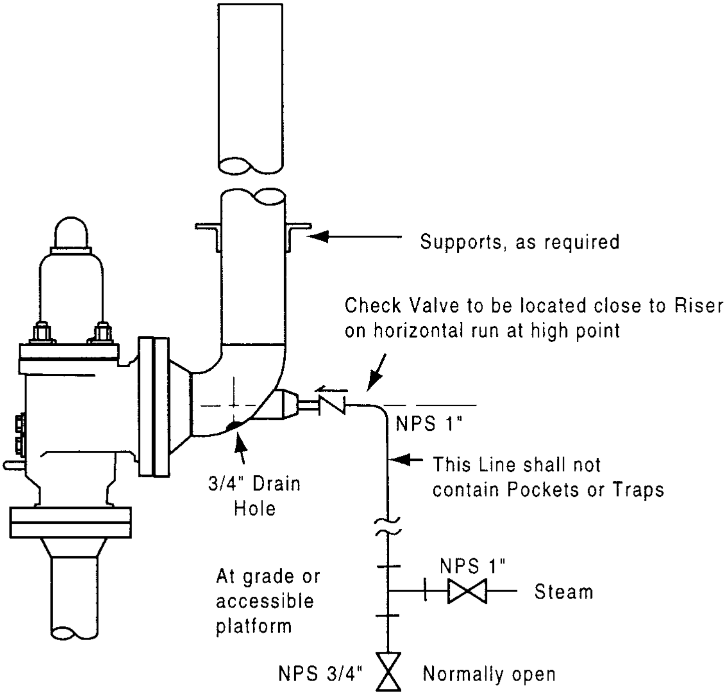
Supports, as required
Check Valve to be located close to Riser on horizontal run at high point
NPS 1"
This Line shall not contain Pockets or Traps
3/4" Drain Hole
At grade or accessible platform
NPS 1"
Steam
NPS 3/4"
Normally open

FIGURE C7.21 Snuffing steam to pressure-relief atmospheric vent.

side of reciprocating compressors and pumps), it may be desirable to locate the valve farther from the source in a more stable pressure region. The differential between operating and valve set pressures is also important when the operating pressure is not steady. A large differential will tend to reduce valve maintenance costs.

On certain vessels, pressure relief valve leakage and consequent premature shutting down of the process unit can be anticipated. These vessels should be provided with a sufficient number of pressure relief valves (and accompanying block valves) so that in the event of pressure relief valve leakage it will be possible to shut off any one defective valve and replace it while the vessel is in service and still retain full calculated relieving capacity.

Pressure Outlet Piping Discharge to Atmosphere

Outlet piping for pressure relief valves discharging flammable vapors directly to the atmosphere should normally be equipped with steam and drain connections controlled from grade, as shown by Fig. C7.21. Outlet piping from pressure relief valves should be equipped with drains or otherwise suitably piped to prevent accumulation of liquids at the valve outlet. Pressure relief valve outlet piping for water or other liquids should be self-draining.

Separate pressure relief valve lines should be provided for each valve discharging directly to the atmosphere. On towers, the pressure-relief valve vent piping should be extended at least 10 ft (3 m) above the nearest working platform within a radius of 40 ft (12 m). Outlet piping should be arranged so that the pressure-relief valve discharge will not impinge on any equipment.

Closed Discharge Piping to Flare Header System

Pressure relief valve discharge piping connecting to a closed system should be self-draining to the blowdown drum, vent stack, or other means for liquid/vapor separation and disposal. The main headers are frequently sloped to assure drainage. A continuous purging connection should be considered for closed system piping to prevent flammable mixtures resulting from possible pressure relief valve leakage. Where necessary or desirable to detect leaking pressure relief valves, a NPS ¾ (DN 20) valved and plugged drain connection should be provided at the outlet of each valve.

The sudden initiation of relief valve outflow can cause severe stresses in attached equipment and structures. Consequently, such factors as the high- and low-temperature properties of material, thermal expansion, vibration, and fatigue must be considered in designing pressure relief valve discharge piping. Vibration is particularly a concern for liquid service relief valves, where flashing and valve chatter are possible, which can lead to loosening of flange and valve bolting, and subsequent leaks. The use of conical spring washers or other nut-locking devices should be considered in these relief valve services to minimize the possibility of inadvertent loosening of flange bolting.

Discharges into closed flare header systems also represent significant challenges to the piping designer. Flare headers often represent one of the more difficult piping systems to route along pipe racks from the process units to the offsite blowdown and flare stack facilities. The piping tends to be of relatively large diameter, and it normally must be designed for large variations in operating temperatures. This includes the possibility of severe longitudinal bowing of the line if liquid at either relatively high or low temperatures discharges into the flare header, resulting in mixed-phase flow, with a vapor layer above a liquid stream.

Vent and Drain Piping

Provisions for low-point drains and high-point vents are typically needed for pressure testing, start-up, chemical cleaning, and for decommissioning of process plant piping. Valved drain and vent connections are also provided for most types of process equipment. These drains and vents should be located on the equipment if practical, but they may be located in connected piping where there are no valves or blocks between the drain or vent connections and the equipment.

Piping from drain connections should be arranged to drain the equipment and the connected piping to the appropriate process drainage system. The alternate to complete drainage is a start-up procedure for water removal, such as (1) displacement by circulation, (2) gradual heating during start-up, (3) dry gas purging, or (4) high-velocity gas purging. Multistage pumps, furnace headers, control valves, and horizontal pipe that deflects between supports are typical locations where it is usually impractical to provide complete drainage.

Generally, drain connections to closed drainage systems may require double block valves and with a bleed connection between the block valves.

Drains, vents, and pump outs for piping and equipment in vacuum service should be blinded or plugged during operation of the unit to prevent the entrance of air. There are, however, drain and vent connections which need not be connected to a closed drainage system. Examples are connections which are not hazardous if left open, connections for checking water accumulations, and vessel vents which are not needed during operation. These drains and vents should be provided with a block valve and blind flange, plug, or cap. Valved vents may not be required for high-point vents used to bleed air for system pressure testing only. These connections should be plugged and seal welded after pressure testing.

In lines containing hazardous fluids, a drain should be provided between block and check valves where fluids could be trapped. Where check and block valves separate a hazardous fluid from process piping or other process equipment, the block valve should be located between the check valve and the process piping or equipment.

Water drainage from vessels in light-ends service can be complicated by the refrigeration effect of light hydrocarbons that vaporize at atmospheric pressure. An ice plug formed by this refrigeration effect can prevent proper valve closure, and hazardous vapors will be released when the ice melts. In most cases heat tracing or other means of heating drain lines and valves will prevent freezing.

Means should be available for removing the operating liquid contents from all vessels and heat exchanger units and the connected piping. Although process lines and pumps should be used for this purpose, an auxiliary pumping-out system may be needed. A permissible alternate is to use steam or inert gas to remove the contents of the equipment by pressure. On pressure vessels, pumpout connections should be provided for side drawoffs as well as at the bottom of the vessel.

The recommended minimum size for pipeline drains and vents is NPS ½ (DN 15). The recommended minimum size of drains and vents is NPS 1 (DN 25) for vessels and NPS ¾ (DN 20) for all other equipment. However, the size of vent and drain connections should be such that the water used for hydrostatic test or flushing may be drained off without pulling a vacuum. On some small pumps, compressors, and turbine and steam engine drives, NPS ¾ (DN 20) or larger drain and vent connections are not economical. In such cases, NPS ½ (DN 15) drains and vents are acceptable.

Instrument Piping/Sample Connections

The term *instrument systems*, as used here, includes piping associated with field instrument installations and associated systems to connect air or hydraulically operated instrument control apparatus. It does not include instruments or permanently sealed fluid-filled tubing systems furnished with sampling transport systems associated with process stream analyzers.

Instrument Piping. Instrument piping must meet all the applicable requirements of the associated principal piping systems, and the following:

- The design pressure and temperature for instrument piping should be determined with consideration of short-time conditions. If it presents a more severe condition, the temperature of the piping during periodic operation of the blowdown valve should be considered a short-time condition.
- Consideration must be given to the mechanical strength, including the fatigue resistance, of small instrument connections or apparatus.

- Instrument piping containing fluids which are normally static and subject to freezing must be protected by heat tracing or other heating methods.
- When it is necessary to blow down or bleed instrument piping systems containing hazardous fluids, consideration must be given to the safe disposal of such fluids.

All instruments, including thermocouples, should be accessible for maintenance. Instrument process connections that require maintenance should also be accessible, including accessories such as rod-out connections, condensate pots, and seal connections. The overall piping design needs to consider the intended location of required instruments to locate appropriate take-off connections that allow good accessibility. During pipe layout, consideration should be given to routing process piping adjacent to platforms or to pipe and instrument grouping such that one platform will provide access to several instruments.

A block (usually gate) valve is typically installed in each instrument take-off connection. It should be located as close to the vessel or line as possible, consistent with the manual opening and closing of the valve. Take-off connections, including the first valve, should be in accordance with the line service classification. The use of elbows between the take-off point and the valve should also be avoided.

Sample Connections. On a process unit, sample connections are typically provided on feed and product streams and on such intermediate streams as are necessary for control and testing. Sample piping should be as short as possible and be adequately braced to enable it to resist unexpected external loads and to protect it from damage when valves are operated. If the piping is carefully supported and anchored, it is permissible to use an equipment drain for sample purposes.

As a general rule, sample connections should not be installed directly on pumps, compressors, or other equipment subject to vibration if other locations where samples might be taken are available. A likely location for sample connections is often combined with the installation of pressure gages. It is suggested that the minimum size of the first nipple attached to the piping or equipment from which the sample is taken be NPS ¾ (DN 20). A block valve of the same size as the nipple should be installed at the end of the nipple. A second valve should be installed in the sample line as close to the sampling point as practicable. A sample cooler will sometimes be necessary to assure safe handling of the stream being sampled.

Utility Piping

Air, steam, or water connections to process piping or process equipment should be temporary unless they serve as part of the process. Temporary connections should consist of a block valve, a check valve, and a blind flange. The block valve should be located between the check valve and the process piping or equipment. Both valves should conform to the specification of the more severe service.

When a permanent air, steam, or water connection to process piping or process equipment is needed, a check valve, a NPS ¾ (DN 20) bleed, and a blank should be provided in addition to the block valve. The block valve should be located between the check valve and the process piping or equipment, and the bleed should be located between the two valves. There must be a block valve in the utility line, upstream of the check valve to permit installation of the blank. A second bleed valve is recommended between these valves to test for back-flow through the check valve. All valves downstream of the blank should conform to the specification of the more severe service.

Utility and drain connections at the bottom of the equipment may be manifolded into a single header in order to simplify piping connections to the vessel, except that steam connections should not be in the same manifold as the drain and pump-out connections.

Service outlets for steam, water, and air hose connections are typically NPS 1 (DN 25) size. Outlets should be located so that working areas and process equipment can be reached with a single 50 ft (15 m) length of hose.

Water Service Piping. Process plants have several water systems. These may include high pressure (for fire fighting), low pressure (for cooling and use in the process), potable water, and different types of process water systems. One of the most severe design problems for many locations is to protect water systems from freezing. One obvious way to do this is to place the piping underground and below the frost lines. However, in a process unit much of the water piping must be above grade. If the piping is out of doors and in intermittent or standby service, it should be heat traced and insulated. In cold climates, heat tracing and insulating should be considered for water lines with low continuous flow rates. An alternative to heat tracing and insulating is to provide a bypass to a drain so that flow in the water line is continuous and at a high enough rate to prevent freezing. On water mains, the high-point vent between block valves should be protected from mechanical damage as well as from freezing.

Drains should be provided on any water line located above the frost line so that it can be drained when it is shut down. Such drain connections and valves should generally be located underground, and drains should, where practicable, connect to a sewer. Drainage facilities should also be provided for the water side of heat exchangers.

Water injected into a process stream normally is taken from the low-pressure water system. However, where salt water is used for the cooling-water and fire-water systems, water for process purposes is usually taken from the potable water system.

Each cooling water exchanger that may be removed from service during operation of the unit should have a block valve in both the inlet and outlet piping. Multiple shells or exchanger in series, which cannot operate independently of each other, should be considered as a single exchanger.

The water supplied to shell and tube coolers and condensers should pass through a strainer. If a strainer is not provided at the water pump or in the supply main, individual strainers should be provided in the branch line. The necessity for installing an oil separator drum, a gas disengaging drum, or a bypass filter in the cooling-tower water return system should be considered.

Water from exchangers should generally be sent to a clear water sewer or cooling water return system. Sample connections should be provided for detection of process leaks. However, a separate connection need not be provided for this purpose if other connections (e.g., drains and vents) can be used. An NPS ¾ (DN 20) valved and plugged vent should be provided on top of the first horizontal section of the water line downstream of the exchanger. The vent should be plugged during operation of the unit.

For chemical cleaning of exchangers using cooling water, connections should be provided to the inlet and outer nozzles on the water side of each exchanger. The connections should be between any block valve and the exchanger. If there is no block valve, a pair of flanges must be provided nearby so that the piping can be blanked off during cleaning. It is suggested that the chemical cleaning connections be NPS 1½ (DN 40), and they should be equipped with a blind flange.

Sufficient connections to the water system should be provided so that water can be supplied to the pressure vessels on the process unit for washing out or hydrostatic testing. These connections should be from the cooling-water system if the pressure in the system is adequate to supply water to the top of the tallest tower on the unit; otherwise the connections should be to the fire water system.

Normally vessels need not be permanently connected to a source of water. If a permanent connection is made, it should be at the bottom of the vessel and should be blanked off when the vessel is in operation.

Air Piping. Most process plants have a plant air system not only for use in the processes but to operate tools, equipment, and instruments.

Where necessary, the intakes of air compressors should be designed to minimize the noise level. Filters should be provided in the intake piping to reciprocating and rotary air compressors when they take suction from the atmosphere. Filters will sometimes be necessary for centrifugal air compressors. When a filter is not provided for a centrifugal air compressor taking suction from the atmosphere, the intake piping should be provided with a bird screen. Filters preferably should be of the dry, replaceable-cartridge type. Such filters should have an open area not less then three times the area of the intake pipe. The oil-bath-type filter should not be used with centrifugal air compressors.

Low points in the discharge line from an air compressor should be avoided because it is possible for lube oil to be trapped and subsequently ignited. If low points are unavoidable, they should be provided with drains.

When condensed moisture in air lines is undesirable from a process standpoint (which typically is the case for instrument air connections) or the possibility of moisture freezing exists, consideration should be given to providing an air drier drum in the supply line near the process unit. The drum should be located where it will not be exposed to heat from other equipment. Based on estimated future air requirements, the size of the drum should be such that (1) the velocity in the drum does not exceed 15 fpm (0.08 m/s) during shutdown periods when maintenance equipment is being used and (2) the capacity be equal to at least 6 percent of the free air requirements per minute during normal operation.

In climates where freezing is possible, the bottom 18 in (450 mm) of the dry drum should be insulated and heat traced. The drum drain (or blow-off) should also be traced or insulated. All blow-off connections should be installed pointing downward so that any rust or scale blown out will not endanger personnel.

Air piping should slope downward to dry drums or moisture traps, or be horizontal. Branch connections to air headers should be to the top of the pipe. Block valves should be provided in all branch lines.

When an air line is connected to process piping, two block valves, a check valve, and a bleeder should be provided. A second bleed valve should also be provided upstream of the check valve to test for backflow through the check. Consideration should be given to also providing a removable section of line or hose in order to guard against inadvertent operation.

Air for operating instruments is normally a separate system from the plant air system, and backup compression systems are often provided to increase in-service reliability. For process units, a steam-driven compressor should be furnished to supply instrument air in case of failure of the main supply. Where plant air is the primary source, and the possibility of a power failure is remote, electrically driven compressors may be used.

In extensive instrument air systems, the piping should be arranged with header and subheaders, such that groups of instruments may be isolated from the systems without affecting the air supply to all instruments. Block valves should be provided at the instrument air headers in all branch lines to instruments. Leads to individual instruments should be NPS ½ (DN 15) minimum. As a rule of thumb, headers serving from 1 to 25 instruments should be NPS 1 (DN 25) pipe size, and headers serving from 26 to 75 instruments should be NPS 2 (DN 50) pipe size.

Steam and Condensate Piping. Process plants usually have two or more steam systems and an exhaust steam condensate system. One of the steam systems generally operates in the range of 100 to 150 psig (690 to 1035 kPa) (low-pressure steam), and another operates at superheated conditions and significantly higher pressures (high-pressure steam). The exhaust steam system normally operates at a pressure of less than 50 psig (345 kPa). The design problems associated with these systems are not all similar to those encountered in a central power station; consequently a brief discussion on process plant steam piping requirements follows.

The principal concern is to supply clean, dry steam to the equipment using it. In accomplishing this, it is desirable to connect all branch lines (except condensate collection points) to the top of horizontal steam mains. However, if the line to a steam driver is at least one size smaller than the main and the steam has a considerable amount of superheat, it may be permissible to make a centerline connection to the side of the steam main. With other steam conditions it probably will be necessary to install a knockout pot or drum or a steam separator in addition to making the connection to the top of the main. Pockets should be avoided in the line to the turbine.

Connections to exhaust headers should preferably be made to the top of the header so that the condensate in the header does not run back into the driver.

In the steam line to a steam driver, a block valve(s) should be located at the driver and be easily accessible for operating purposes. A single gate valve is needed in the exhaust line from each steam driver that does not exhaust directly to atmosphere or directly into an individual condenser. However, valves need not be provided where two or more drivers, which will never be shut down separately, exhaust to the same condenser. This exhaust gate valve should be installed at the driver so that the position of the gate (i.e., open or closed) will be obvious to the operator whenever he is required to operate the inlet valve.

Wherever steam is exhausted to the atmosphere and could create such personnel hazards as burns, freezing of condensate on walkways, or the blanketing of working area with a heavy fog, the line should be fitted with an exhaust head and a drain to a sewer. The use of a silencer should be considered where noise nuisance is likely.

The flexibility of steam piping should be attained through the use of expansion bends and elbow fittings. The use of expansion joints is discouraged except where the size and arrangement of exhaust lines prevent the use of expansion bends, which may be the case of certain steam exhaust connections to steam condensers. Particular attention should be given to the anchorage and support of the connecting piping.

When required by the service, means should be available for purging process equipment with steam or inert gas. For example, each pressure vessel in hydrocarbon service should be provided with a steam-hose connection near the bottom if not permanently connected to the source of steam. However, where a permanent connection is made, it should be blinded during operation of the unit.

The steam supply for smothering, snuffing, service hoses, space heating, and auxiliary or protective heating should be connected to a source that will not be shut off during unit shutdowns or to a source that will not be shut off when the steam to a piece of equipment such as a turbine is shut off. For fire protection purposes, smothering (or snuffing) steam usually is required for fired heaters and for relief valve discharge lines.

Condensate Removal and Steam Traps. Condensate should preferably be discharged into an oil free drain system, but under no circumstances should it be discharged into a sanitary sewer. Consideration should be given to a condensate collection system in installations which involve a large number of steam traps. When condensate is to be discharged to a cast iron or concrete sewer or a concrete sewer box, the hazard of vaporizing hydrocarbons which may exist in the sewer should be considered. Also, to avoid damage to the concrete, the connection should be below the water level. If there is insufficient quantity of water for quenching, the condensate should be first led to an atmosphere-pressure drain tank.

Steam traps should be provided for the removal of condensate from collection points in live and exhaust steam systems, in particular from condensate drip legs, drains on steam turbines, steam separators, connectors, unit heaters, and terminal ends of companion piping. All low points in steam lines, except steam companion lines and the ends of long headers, should be provided with drip legs. It may also be necessary to install drip legs at intermediate points on headers with long sections at one elevation (i.e., in addition to those low points at the end).

When a valve is installed in steam piping in such a manner that condensate can collect above the valve, a trapped drain should be provided above the valve seat.

Whenever possible, a steam trap should be installed below and close to the equipment pipeline being drained, but the trap should be easily accessible for periodic inspection. Each trap should serve only one collection point. Where large quantities of condensate are expected, either condensate pots or condensate drains should be provided.

Drains from turbine shaft packing glands and from governor valve stem packing glands should preferably be connected to an open drain system. The drain lines and headers should be of sufficient size to prevent a back-pressure buildup. Also, untrapped drains should be provided at the lowest point of the steam end of each reciprocating pump and compressor.

Drains not discharging into a closed drainage system should discharge downward and should be arranged so that rising steam does not create a hazard or condense on equipment, such as a turbine or pump. The condensation of rising steam on such equipment can create lube oil contamination. One thing that can be done to help eliminate this problem is to quench the condensate.

A principal cause of steam traps freezing is improperly designed discharge lines. Steam trap discharge lines should be sloped for drainage where possible. In cases where freezing is likely, no part of the trap discharge header should be at an elevation above that of the trap discharge. Pockets in the discharge lines should be avoided. Long trap-discharge lines, if not in heated enclosures, should be insulated. Trap-discharge lines in heated enclosures need to be insulated only if necessary for burn protection. To decrease further the possibility of freezing, steam trap bodies should not be insulated unless the following circumstances make doing so advisable:

- The trap is installed downstream of automatic steam controls that could shut the steam off for long periods of time.
- The trap is installed in a location where operators might be burned by the bare metal surfaces.
- The trap is part of a heat recovery system where retention of heat is important.

- The trap is installed to handle exhaust steam condensate that contains quantities of cylinder oil.

Inverted-bucket and thermodynamic steam traps, which are commonly used in process plants, are generally installed without strainers. Steam traps should be selected for a *continuous discharge rate*, which is the actual condensate rate multiplied by a safety factor. A safety factor of at least 3 should be used for inverted bucket type traps and thermodynamic traps. A larger safety factor is needed for traps draining jacketed equipment, and trap manufacturers should be consulted. In borderline cases offering a choice between two traps sizes, the smaller trap is usually preferred.

Steam Companion Piping for Auxiliary Heating. The most commonly encountered situations requiring auxiliary heating are as follows:

1. Piping in which the fluid temperature could drop below the pour point or freezing point, and piping in which the fluid is subject to coagulation, excessive viscosity, or salting out
2. Hydrocarbon vapor and gas piping where condensate formation and icing will affect the safety and operation of the equipment, such as might be caused by the reduction in pressure that takes place through a control, throttle, or relief valve and
3. Lube and seal-oil systems for compressors and turbines

Auxiliary heating is normally not needed for freeze prevention and viscosity maintenance on equipment in intermittent service if the equipment is drained, flushed, blown, or steamed out when there is no flowing stream, or if the equipment is far enough underground to prevent freezing. When required, auxiliary heating is usually furnished by external steam companion piping (steam tracing). Other acceptable methods of heating piping and other equipment are internal steam tracing, steam jacketing, hot-water tracing and jacketing, and electric tracing. Details of various heat tracing techniques are covered in detail in Chap. B6 of this handbook.

It is desirable that each steam companion line be continuous from the header to a trap at the end of the line without any vents, drains, branches, or dead-end extensions at intermediate points. Each companion line should have a block valve at the upstream end and be arranged so that flow is generally downward, avoiding pockets as much as possible and leaving no section of the companion line at a greater elevation than the companion header. Live steam is preferred for steam companion piping in colder climates unless a lower temperature is required.

In the design of the companion piping system, provisions should be made for the differential expansion between the traced line and the tracer. When the piece of equipment which is to be kept hot is irregular in shape (such as traps, strainers, valves, and pumps), tubing must be used. The item should be spirally wrapped, starting at the top and working toward the bottom. Several lines to be traced may be grouped inside a single covering of insulation if they are to be maintained at the same temperature.

CASE HISTORIES: CHALLENGES/SOLUTIONS

Process plants offer the piping designer some unique challenges not found elsewhere. The combinations of demanding service requirements and mechanical needs will necessitate innovative designs and solutions. Included herein are a few practical approaches to problem resolution:

Challenge

Installed Type 304L stainless steel piping and mating vessel nozzle NPS 8 (DN 200) Class 300 flanges were found to be inadequate for the specified 750°F (400°C) design temperature and 440 psig (2760 kPa) design pressure hydrofining reactor service. The reactor shell material and its other principal nozzles were constructed from low-alloy material weld overlayed with Type 304L stainless steel. The reactor flanges were all specified with Class 300 flanges, which is acceptable for the low-alloy flanges but not for the solid alloy Type 304L flanges. ASME B16.5 maximum working pressure for Type 304L SS Class 300 flanges is only 335 psig at 750°F (2310 kPa at 400°C) and clearly inadequate for the specified reactor design pressure.

Solution

ASME B16.5 downrates flanges in Type 304L material in elevated temperature service in comparison to the low-chrome reactor flanges and other non-low temperature grades of stainless steel. Attempts to rerate the installed Class 300 flange based on the provisions of B31.3 for 10 percent metal design temperature reductions for uninsulated flanges and the design procedures of ASME BP&V Code Sec. VIII, Division 1 proved to be unsuccessful. It was ultimately decided to replace the existing Type 304L flanges with Type 347 stainless steel Class 300 flanges, which permit a maximum working pressure of 490 psig (3380 kPa), and as such, clearly acceptable for the specified system design pressure.

Challenge

Two recent experiences with installed spiral-wound gaskets with flexible graphite filler have led to different but related instability problems with these gaskets, which raised questions about the standard ASME B16.20 covering these gaskets. The first experience involved Class 1500 and 2500 spiral-wound (SW) gaskets fitted with inner retaining rings that suffered severe inward buckling at initial boltup. The second experience pertains to the gross inward buckling of the inner spirals of Class 600 and lower rating gaskets supplied without inner rings. Events led to the ultimate removal of some 2000 gaskets supplied by 3 different manufacturers, which revealed that severe inward buckling had occurred on about 12 percent of installed gaskets across a wide range of sizes.

Solution

Gaskets supplied in both cases complied fully with ASME B16.20 requirements, which highlighted inadequacies in this standard for spiral wound gaskets. Efforts have been initiated to work with manufacturers in their assessment of fundamental design considerations and with appropriate code committees to address apparent deficiencies discovered with this type of gasket. The buckling in both experiences had occurred during the initial compression of the gasket, before the flanges were put into service.

While the root cause of the problem has yet to be identified, the buckling phenomenon is clearly related to the incompressible properties of the flexible graphite and the tightness of the spiral windings. The experiences have also revealed that the inner ring widths specified by ASME B16.20 for many gasket sizes are inadequate to effectively resist buckling. Interim measures have been adopted by ASME B16.20, and it is recommended that users specify inner rings for all NPS 6 (DN 150) and larger SW gaskets with flexible graphite filler until more definitive measures are identified to resolve the root cause of the buckling phenomena. Reference 17 provides more information on this industrywide concern and overall considerations for gasket performance testing protocols.

Challenge

Severe acoustically induced piping vibrations generated by high-capacity pressure-letdown valves have led to fatigue failures at downstream piping branch connections within days of their initial operation. One such experience involved a safety letdown control valve within an LNG treat gas unit to a flare header system. The initial operation of this system led to cracks at an NPS 10 (DN 250) branch connection to an NPS 28 (DN 700) flare header. The failure occurred after about 5 to 10 hours of its initial startup and eventually led to the branch connection completely breaking away from the run header. The letdown valve was designed for a mass flow rate of about 383,000 lb/hr (175,000 kg/hr), with an upstream pressure of 620 psia (4278 kPa) letting down to 30 psia (207 kPa) flare header back-pressure.

This and other experiences in the gas production, petrochemical, and other industries have demonstrated that acoustic energy in high-capacity, gas pressure-reducing systems can cause severe piping vibrations that in extreme cases have led to piping fatigue failures within a few hours of commencing operation.

Solution

Based on a statistical approach, criteria were generated to reflect maximum levels of acoustic power generated by the pressure letdown valve before fatigue failure was experienced (see Ref. 5). The ultimate solution involved the replacement of the installed pressure letdown valves with low-noise producing valves with labyrinth multistaged pressure reducing trim to avoid choked sonic flow conditions generated by the valve.

Challenge

Severe vibrations were found with the initial start-up of an NPS 2 (DN 50) nitrogen utility line connected to an NPS 10 (DN 250) suction line of a reciprocating compressor in make-gas service. The nitrogen line was relatively flexible, and had long lengths of supported piping. Detailed acoustical analyses were conducted with the main suction and discharge piping of this reciprocating compressor, but this did not include the subject utility connection.

Solution

Additional pipe supports were installed to the nitrogen line, changing the natural frequency of the piping geometry and reducing the response to the compressor pressure pulsation excitations.

Challenge

An erosive slurry was causing material loss at changes of direction in a conventionally constructed piping system with elbows and tees. Space constraints did not allow for long-sweep turns.

Solution

Dead-end tees were installed where the solids filled the impact area of the tee. The abrasive solids then wore on themselves, thereby protecting the pressure boundary.

Challenge

A heater outlet line was expected to operate at about 1500°F (816°C). The attendant expansion and stress analysis difficulties were magnified, since the process piping material was well into the creep range. Premature failure was expected.

Solution

The hot metal heater line was transitioned into an internally refractory-lined system near the heater outlet. The lower shell temperature eliminated the probability of creep rupture failure, simplified the expansion and stress analysis problems, and reduced system maintenance.

The previous discussion only touches on the multitude of challenges/solutions encountered in the area of process piping. Reference literature has documented some of the many valuable experiences encountered in this regard.

REFERENCES

1. ASME Code for Pressure Piping, B31.3, *Process Piping,* American Society of Mechanical Engineers, New York, 1996 edition, including ASME B31.3a–1996 addenda.
2. ASME Standard B16.5, *Pipe Flanges and Flanged Fittings,* American Society of Mechanical Engineers, New York, 1996.
3. W.F. Bland, R.L. Davidson, eds., *Petroleum Processing Handbook,* McGraw-Hill, New York, 1967.
4. J. Hirschhorn, *Dynamics of Machinery,* Barnes & Noble, Inc., New York, 1968.
5. V.A. Carucci and R.T. Mueller, ‘‘Acoustically Induced Piping Vibrations in High Capacity Pressure Reducing Systems,’’ American Society of Mechanical Engineers, 82-WA/PVP-8, New York, 1982.

6. ASME/ANSI Standard B1.20.1, *Pipe Threads, General Purpose (Inch),* American Society of Mechanical Engineers, New York, 1992.
7. ASME Boiler and Pressure Vessel Code, Section VIII, Division 1, *Pressure Vessels,* American Society of Mechanical Engineers, New York, 1996.
8. ASME Standard B16.9, *Factory-Made Wrought Steel Butt-Welding Fittings,* American Society of Mechanical Engineers, New York, 1993.
9. ASME Standard B16.11, *Forged Fittings, Socket-Welding and Threaded,* American Society of Mechanical Engineers, New York, 1996.
10. ASME Standard B16.48, *Steel Line Blanks,* American Society of Mechanical Engineers, New York, 1997.
11. ASME Standard B36.10M, *Welded and Seamless Wrought Steel Pipe,* American Society of Mechanical Engineers, New York, 1996.
12. ASME Standard B16.47, *Large Diameter Steel Flanges,* American Society of Mechanical Engineers, New York, 1996.
13. J.H. Bickford, ed., *Gaskets and Gasketed Joints,* Marcel Dekker, Inc., New York, 1997.
14. ASME Standard B16.21, *Nonmetallic Flat Gaskets for Pipe Flanges,* American Society of Mechanical Engineers, New York, 1992.
15. J.R. Payne, R.T. Mueller, and A. Bazergui, ''A Gasket Qualification Test Scheme for Petrochemical Plants: Parts 1 & 2,'' pp. 53–79, ASME PVP Vol. No. 158, June 1989.
16. J.R. Payne, R.T. Mueller, M. Derenne, ''Specifying Flexible Graphite Based Gaskets for High Temperature Service (Qualification Testing Protocols to Verify Performance),'' presented at ASME PV&P Conference, Montreal, Quebec, Canada, July 1996.
17. R.T. Mueller, ''Recent Buckling Experiences with Spiral Wound Flexible Graphite Filled Gaskets,'' pp. 23–34, ASME PVP Vol. No. 326, presented at ASME PV&P Conference, Montreal, Quebec, Canada, July 1996.
18. ASME Standard B16.20, *Metallic Gaskets for Pipe Flanges: Ring Joint, Spiral Wound, and Jacketed,* American Society of Mechanical Engineers, New York, 1996, including ASME B16.20b-1997 addenda.
19. ANSI Standard B1.1, *Unified Inch Screw Threads (UN and UNR Thread Form),* American Society of Mechanical Engineers, New York, 1989.
20. ASME Standard B16.34, *Valves—Flanged, Threaded, and Welding End,* American Society of Mechanical Engineers, New York, 1996.
21. API Standard 600, *Steel Gate Valves—Flanged and Butt-Welding Ends, Bolted and Pressure Seal Bonnets,* American Petroleum Institute, Washington, DC, 1997.
22. MSS Standard SP-45, *Bypass and Drain Connections,* Manufacturer Standardization Society, Vienna, VA, 1992.
23. API Standard 607, *Fire Test for Soft-Seated Quarter-Turn Valves,* American Petroleum Institute, Washington, DC, 1993.
24. API Standard 594, *Check Valves: Wafer, Wafer-Lug, and Double Flanged Types,* American Petroleum Institute, Washington, DC, 1997.
25. API Standard 598, *Valve Inspection and Testing,* American Petroleum Institute, Washington, DC, 1996.
26. P.A. Schweitzer, *Handbook of Corrosion Resistant Piping,* Industrial Press Inc., 1969.
27. ASSE Standard A 1264. 1, *Safety Requirements for Workplace Floor and Wall Openings, Stairs and Railing Systems,* American Society of Safety Engineers, Des Plaines, IL, 1992.
28. D. Burgreen, *Principles of Piping Analysis* (First ed.), C.P. Press, Jamaica, NY, 1977.
29. M.W. Kellogg Co., *Design of Piping Systems,* John Wiley & Sons Inc. New York, 1967.
30. ASME Boiler and Pressure Vessel Code, Section IX, *Qualification Standard for Welding and Brazing,* American Society of Mechanical Engineers, New York, 1995.

31. ASME Standard B16.25, *Butt Welding Ends,* American Society of Mechanical Engineers, New York, 1997.
32. PFI Standard ES-7, *Minimum Length and Spacing of Welded Nozzles,* Piping Fabrication Institute, Springdale, PA, 1994.
33. PFI Standard ES-24, *Pipe Bending Methods, Tolerances, Process and Material Requirements,* Piping Fabrication Institute, Springdale, PA, 1992.
34. PFI Standard ES-5, *Cleaning of Fabricated Piping,* Piping Fabrication Institute, Springdale, PA, 1993.
35. J.H. Bickford, *An Introduction to the Design and Behavior of Bolted Joints,* Marcel Dekker, New York, 1997.
36. ASME Boiler and Pressure Vessel Code, Section V, *Nondestructive Examination,* American Society of Mechanical Engineers, New York, 1995.
37. J.H. Gary, and G.E. Handwerk, *Petroleum Refining—Technology and Economics,* Marcel Dekker, Inc., New York, 1975.
38. R.E. Johnson, "Specifying Plastic-Lined Piping," *Chemical Engineering*, May 1982.
39. J. C. Wachel, and C. L. Bates, "Escaping Piping Vibrations while Designing," *Hydrocarbon Processing*, Vol. 55, October 1976.
40. API Standard 618, *Reciprocating Compressors for Petroleum, Chemical, and Gas Industry Service,* American Petroleum Institute, Washington, DC, 1995.
41. API Standard 617, *Centrifugal Compressors for Petroleum, Chemical, and Gas Industry Service,* American Petroleum Institute, Washington, DC, 1995.
42. API Standard 610, *Centrifugal Pumps for Petroleum, Heavy Duty Chemical, and Gas Industry Service,* American Petroleum Institute, Washington, DC, 1995.
43. API Standard 674, *Positive Displacement Pumps—Reciprocating,* American Petroleum Institute, Washington, DC, 1995.
44. API Standard 661, *Air-Cooled Heat Exchangers for General Refinery Services,* American Petroleum Institute, Washington, DC, 1997.
45. API Standard 650, *Atmospheric Storage Tanks,* American Petroleum Institute, Washington, DC, 1994, with 1996 addenda.
46. API Recommended Practice RP 520, *Sizing, Selection, and Installation of Pressure-Relieving Devices,* American Petroleum Institute, Washington, DC, 1994.
47. API Recommended Practice RP 521, *Guide for Pressure Relief and Depressuring Systems,* American Petroleum Institute, Washington, DC, 1997.

CHAPTER C8
CRYOGENIC PIPING SYSTEMS

INTRODUCTION

Nicholas P. Theophilos, Ph.D., P.E.
Manager
Standards and Quality Assurance
Praxair, Inc.

Cryogenics (from the Greek ''kryo-genikos,'' meaning cold generation) is the science and technology associated with very low temperatures. Depending on one's point of view, any temperature below −20°F can be set to establish such a demarcation. Here the −20°F point has been selected because it normally represents the onset of embrittlement for ordinary carbon steels in typical structural applications.

Cryogenics is not a separate branch of physics, since it obeys all laws of ordinary physics. In fact, cryogenics is low-temperature physics. The reasons for its special treatment, therefore, are not because of its uniqueness as a science but rather because of the very special problems it creates as a technology. These problems relate to embrittlement of materials, large displacements (expansion and contraction), rapid change of phase due to large heat fluxes (big delta T), and small latent heats of the fluids involved.

In order to obtain a better appreciation of the special considerations involved in cryogenic piping system applications, it was felt that it would be necessary to review the behavior of materials at cryogenic temperatures and the physical and thermodynamic properties of cryogenic fluids. These considerations are covered in the sections ''Properties of Cryogenic Fluids'' and ''Materials Used in Cryogenic Piping Systems.'' Additionally, cryogenic piping system design is discussed in the sections ''Piping Systems Design—Fluids'' and ''Piping Systems Design—Mechanical.''

From the strictly heuristic point of view of fundamental applications of scientific principles there are hardly any differences between cold box piping and all other types. Nevertheless, we are making a special topic of cold box piping because of the confined spaces involved and the conceptual arrangements required to satisfy logistically workable and economically feasible process considerations. Such piping is discussed in the section ''Cold Box Piping.''

The coverage on cryogenic distribution systems, as provided under the sections ''Liquid Storage and Conversion Systems'' and ''Mobile Equipment System,'' considers more than just piping; it covers the functional design philosophy of cryogenic fluid storage and distribution and provides quite an insight into the logistics of the entire operation.

With the advent of chip making, the need for ultra-high-purity inert gases has come into clear focus, and industry has responded to this need by developing suitable storage and distribution systems. These aspects of cryogenic piping systems are discussed in the last section.

Naturally, the drive behind most technologies is economic in nature, and in this respect cryogenics is no exception. This is certainly much more so when it comes to liquid distribution because there is no other motive. Industrial gases can certainly be distributed in the compressed gaseous form, even in bulk quantities, if costs are not a consideration. Such economic aspects are discussed in the next section.

References for each section are at the end of each section.

ECONOMIC PARAMETERS OF CRYOGENIC FLUID DISTRIBUTION SYSTEMS

Norman H. White,
Engineering Associate
Praxair Inc.

Cryogenic processes are typically applied to commodity chemicals that exist as gases at normal ambients. Such gases are liquefied at reduced temperatures and are normally maintained at saturated conditions. The processing techniques generally involve both the liquid and gaseous phases and exploit the dramatic changes in physical and thermodynamic properties that occur with changes of state. Cryogenic temperatures are applied at each step in the process of bringing these gases to the final consumer, including production, distribution, and storage.

Typically, industrial gases are found in mixtures in which some of the components have commercial value. Two of the most important examples of such mixtures are gases from certain hydrocarbon wells and the Earth's atmosphere. The feed streams are separated by liquefaction and subsequent fractional distillation with the produced streams delivered in either the gaseous or liquid state. Cryogenic distillation allows a wide choice in the degree of separation, ranging from crude to extremely fine. It is a highly efficient process with power consumed chiefly in refrigeration lost to the environment and pressure lost in the product streams. Economic considerations in the liquefaction and distillation process involve trade-offs between operating efficiency and capital expenditure. No other method is as versatile or as effective as cryogenic separation of industrial gas mixtures for commodity usage.

The key to industrial gas distribution and storage operations is the use of a cost-effective method that increases the product density. The transport or storage vessel is reduced to manageable dimensions in this way. The historical solution to this problem is elevated pressures at ambient temperatures. Indeed, high-pressure cylinders and receivers made to a variety of U.S. Department of Transportation (USDOT) and ASME specifications are widely used today to store gases at pressures exceeding 2000 psig (138 bar). These vessels are typically of single-piece forged construction involving fabrication and inspection procedures that enable them to safely operate at ultimate to design stress ratios of 3:1. In spite of these measures to achieve an efficient package, the ratio of vessel weight to product weight is extremely high. Therefore, the cost of storing and transporting these gases in such vessels is very high relative to the value of the product they contain. Some of the characteristics of typical high-pressure receivers and cylinders are summarized in Table C8.1a and Table C8.1b.

TABLE C8.1a Typical Specifications for Seamless Forged Pressure Vessels
ASME Pressure Vessel Code. Sizes, capacities, and design pressures

Dimensions									
OD	in	16	16	20	20	24	24	24	24
	mm	406	406	508	508	610	610	610	610
Min wall*	in	1.25	1.25	1.303	1.303	0.817	0.817	1.154	1.154
	mm	31.8	31.8	33.1	33.1	20.8	20.8	29.3	29.3
Max length	ft	30	30	23	23	24	24	20	20
	mm	9144	9144	7010	7010	7315	7315	6069	6096
Max water volume	cu ft	27	27	34.2	34.2	60.2	60.2	46.1	46.1
	liter	765	765	969	969	1705	1705	1306	1306
Material class†		65	70	65	70	65	70	65	70
Weight									
Unit weight	lb/ft	222.4	222.4	294.4	294.4	230.1	230.1	311.3	311.3
	kg/m	331	331	438.1	438.1	343.9	343.9	463.3	463.3
Max vessel weight	lb	6672	6672	6670	6770	5537	5537	6241	6241
	kg	3026	3026	3071	3071	2516	2516	2831	2831
Design pressure									
SF = 3	psi	5833	6667	4811	5500	2450	2800	3500	4000
	bar	402	460	332	379	169	193	241	276
SF = 4	psi	4383	5000	3615	4124	1841	2100	2630	3000
	bar	302	345	249	284	127	145	181	207

* Nominal wall = min wall ÷ .875.
† Material is SA 372 Grade J.
Source: CP Industries, Inc.

TABLE C8.1b Typical Specifications for Seamless Forged Pressure Vessels
USDOT specification. Dimensions and data for typical vessel sizes.

USDOT Specification[1]							
	psi	3AA-2400	3AAX-2400	3AAX-2900	3AAX-3855	3T-2400	3T-2850
	bar	3AA-166	3AAX-166	3AAX-200	3AAX-266	73T-166	3T-197
Dimensions							
OD	in	24	22	22	18	22	22
	mm	610	559	559	457	559	559
Min wall	in	0.584	0.536	0.647	0.705	0.415	0.492
	mm	14.8	13.6	16.4	17.9	10.5	12.5
Max length[2]	ft-in	6–11.25	40	36	40	40	40
	m	2.11	12.19	10.97	12.19	12.19	12.19
Max average weight[3]	lb	1168	5616	6056	5935	4455	5162
	kg	530	2547	2747	2692	2021	2341
Nom water volume	cu ft	15.7	91	79.6	56.8	93.3	91.8
	liter	445	2577	2254	1609	2642	2600

[1] Specifications are as defined in United States Code of Federal Regulations Title 49.
[2] Length can be varied to meet specific requirements.
[3] Includes end fittings.
Source: CP Industries, Inc.

Liquefaction is another approach that has been widely used for efficient storage and transportation of industrial gases. Gases typically emerge from the liquefaction process saturated at approximately atmospheric pressure and from this point are transported and stored in cryogenic vessels. These are typically double-walled vessels with an inner container designed for the working pressure and temperature of the product and an outer casing designed for ambient temperatures and external pressure. In between the two vessels is a high-performance insulation system which is usually evacuated for the purpose of further enhancing thermal protection. Structural members to support the inner container and piping to provide access to it are also located in the insulation space. Heat is continuously entering the vessel through the insulation, supports, and internal piping. This heat will make the liquid contents boil, and the resultant gas must be removed from the tank if the pressure and temperature of the contents are to be held steady. For this reason, heat leak must be minimized. The thermal efficiency of the tank design is expressed in terms of the percentage of full capacity that will be lost per day when the tank is held at atmospheric pressure. This parameter is termed the *normal evaporation rate* (NER) and is product specific. Table C8.2 summarizes the specifications of typical tankage applied in various production and distribution functions.

Gaseous state storage at high pressures and liquid state storage at cryogenic temperatures both have their place in industry today. Therefore, it is important to compare their relative economics. The primary costs to be compared are those for storage vessel construction, transportation, power to achieve the storage state, and product loss. The construction methods used in forged high-pressure receivers are very different from those used in high thermal efficiency cryogenic temperature vessels. However, the resultant costs per unit weight may be considered equal for

TABLE C8.2 Typical Specifications for Cryogenic Storage Vessels

Model		DM-900	DM-1500	DM-3000	DM-6000	DM-9000	DM-11000	DM-13000
Capacity								
Warm Water	gal	960	1585	3100	6020	9180	11300	13300
	liter	3634	6000	11734	22788	34749	42771	50345
Net Liquid	gal	900	1490	3000	5880	8900	11000	13000
	liter	3407	5640	11356	22258	33689	41638	49209
Oxygen	1000 cu ft	104.0	171.0	345.3	676.8	1024.4	1266.0	1496.0
	cu m	2734	4497	9076	17790	26926	33277	39322
Nitrogen	1000 cu ft	83.8	138.4	279.3	547.5	828.7	1024.0	1210.0
	cu m	2203	3638	7341	14391	21782	26916	31805
Argon	1000 cu ft	101.2	167.6	337.5	661.5	1001.3	1237.0	1462.0
	cu m	2660	4405	8871	17388	26319	32515	38429
Dimensions								
Height	ft-in	15-9	15-9	15-10	26-2	29-7	31-5	36-0
	m	4.8	4.8	4.83	8.0	9.0	9.6	11.0
Diameter	ft-in	6-6	6-6	8-0	8-0	9-6	10-2	10-2
	m	1.9	1.9	2.4	2.4	2.9	3.1	3.1
Weight								
Tare	1000 lb	9.5	10.5	15.5	27.9	37.0	47.0	50.0
	1000 kg	4.3	4.8	7.0	12.7	16.8	21.3	22.7
Oxygen	1000 lb	18.1	24.8	44.1	83.9	121.8	152.0	174.0
	1000 kg	8.2	11.2	20.0	38.1	55.2	68.9	78.9
Nitrogen	1000 lb	15.6	20.6	35.7	67.7	97.0	121.0	138.0
	1000 kg	7.1	9.3	16.2	30.7	43.9	54.9	62.6
Argon	1000 lb	20.0	28.0	50.4	96.3	140.5	175.0	201.0
	1000 kg	9.1	12.7	22.9	42.3	63.7	79.4	91.2
Design parameters								
NER (oxygen % per day)		0.4	0.4	0.5	0.3	0.26	0.25	0.23
MAWP	psig	250	250	250	250	250	250	250
	bar	17.2	17.2	17.2	17.2	17.2	17.2	17.2

Source: Taylor-Wharton Div Harsco Corp.

TABLE C8.3 Weight Ratio: Lading/Vessel

Cryogenic storage vessel						
Volume		MAWP		Lading weight/Tare weight		
gal	liters	psig	bar	N2	O2	AR
900	3407	250	17.2	0.64	0.90	1.10
1490	5640	250	17.2	0.96	1.35	1.65
3000	11356	250	17.2	1.31	1.84	2.25
5880	22258	250	17.2	1.42	2.00	2.44
8900	33689	250	17.2	1.62	2.29	2.80
11000	41638	250	17.2	1.58	2.23	2.72
13000	49209	250	17.2	1.75	2.48	3.02
Gas receiver						
Volume		MAWP		Lading weight/Tare weight		
cu ft	liters	psig	bar	N2	O2	AR
60.2	1705	2800	193	0.14	0.18	0.23
46.1	1306	4000	276	0.13	0.17	0.21
34.2	969	5500	379	0.11	0.15	0.19
27.0	765	6667	460	0.10	0.14	0.17

Source: Praxair, Inc.

rough comparison. Therefore, storage vessel and transportation costs for alternative systems can be compared by the ratio of the vessel weight to product weight. Table C8.3 compares this ratio for several products stored in typical gas and liquid storage vessels. Generally the total cost (capital plus operating) to liquefy a product is lower than that required to compress it as a gas to receiver pressure. Indeed, receivers are most often charged with gas pumped to pressure in the liquid state and subsequently heated to ambient temperature rather than by gas state compression. Product losses to be expected in various liquid systems can be estimated from the NER specifications given in Table C8.2.

Considering these circumstances, cryogenic liquid phase storage is the most economical approach in most cases. Gas storage should be considered where the requirement involves small quantities or long periods of nonuse or difficulty in disposing of the gas boil-off expected in a cryogenic system.

The piping used in cryogenic systems obviously must meet the structural demands imposed by low temperatures. From an economic point of view, the thermal efficiency of the piping system must be carefully considered since the heat of addition to the system will ordinarily result in loss of product. There are two important factors of product loss involved in piping systems that must be considered: refrigeration required to bring the line to operating temperature (cool down) and steady state heat addition. Table C8.4 gives these parameters for uninsulated lines, lines insulated with closed-cell polyurethane foam, and lines insulated with radiation shields in high vacuum (vacuum insulation).

TABLE C8.4 Heat Addition[a]: Steady State and Cooldown

Steady state heat addition								
	Nominal pipe size NPS (DN)							
	1 (25)		2 (50)		3 (80)		4 (100)	
Insulation	Btu /hr-ft	watt/m	Btu /hr-ft	watt/m	Btu /hr-ft	watt/m	Btu /hr-ft	watt/m
Uninsulated[b]	283.0	271.9	533.0	512.2	787.0	756.2	1037.0	996.4
Polyurethane foam[c] thickness								
1 in (25.4 mm)	16.0	15.4	25.3	24.3	32.9	31.6	41.3	39.7
2 in (50.8 mm)	10.8	10.4	15.4	14.8	19.8	19.0	24.1	23.2
3 in (76.2 mm)	8.8	8.5	12.2	11.7	15.2	14.6	18.2	17.5
Vacuum insulation[d]	0.5	0.4	0.8	0.8	1.0	1.0	1.2	1.2

Cooldown								
	Nominal pipe size NPS (DN)							
	1 (25)		2 (50)		3 (80)		4 (100)	
Insulation	Btu /ft	watt-hr/m	Btu /ft	watt-hr/m	Btu /ft	watt-hr/m	Btu /ft	watt-hr/m
CU tube[e]	20.2	19.4	54.0	51.9	103.0	99.0	166.0	159.5
SS pipe[f]	28.3	27.2	52.3	50.3	98.5	94.6	127.4	122.4
Polyurethane foam[g] thickness								
1 in (25.4 mm)	2.5	2.4	3.7	3.6	4.9	4.7	7.9	7.6
2 in (50.8 mm)	7.3	7.0	9.6	9.2	12.2	11.7	16.5	15.9
3 in (76.2 mm)	14.5	13.9	18.0	17.3	22.0	21.1	28.0	26.9
Vacuum insulation[g]	7.1	6.8	12.9	12.4	21.6	20.8	26.6	25.6

[a] Liquid Nitrogen Service.

[b] 8-mph wind over frosted insulated line.

[c] Closed-cell polyurethane foam with PVC cover.

[d] Evaculated laminar radiation shields.

[e] ASTM B-88 Type L.

[f] Schedule 5.

[g] Heat addition due to insulation only.

Source: Praxair, Inc.

PROPERTIES OF CRYOGENIC FLUIDS

Theodore F. Fisher
Process Engineer
Praxair, Inc.

Physical and thermodynamic properties of cryogenic fluids constitute important data that are needed for the design of cryogenic piping systems. The following discussion, tables, figures, and references are furnished with this need in mind.

Transport property data are readily available for the more common pure cryogenic fluids. The bibliography at the end of this section lists sources of physical properties and thermodynamic tables and charts, which supply the detailed data required for the design of piping systems. Table C8.5M (Metric) summarizes some of the more important properties for a number of cryogenic fluids.

Thermodynamic charts show pressure-temperature-phase-density (or specific volume) and enthalpy (heat content, H) relationships for a specific fluid under a variety of formats. Entropy data are often included but are not generally required for the purposes under consideration in this chapter.

Fig. C8.1 is a pressure-enthalpy chart for nitrogen, which will be used to illustrate the behavior of fluids in transport systems, and various uses of pressure-temperature-volume-enthalpy (P-T-V-H) data. The most obvious use may be to determine the density (the reciprocal of specific volume) of a fluid which is being transported under constant pressure and temperature conditions. Referring to the chart, for example, the density of nitrogen at 101.5 psia (0.7 MPa) and 80°F (300°K) is found to be approximately 0.5 lb/ft^3 (8.0 kg/m^3). Other uses of the chart are illustrated in the examples which follow.

The dome-shaped curve at the bottom left of the chart encloses the two-phase (vapor-liquid) region. Nitrogen at pressure and temperature conditions to the left of the dome is a *saturated or subcooled liquid*. Conditions to the right of the dome correspond to *saturated or superheated vapor*. Vapor and liquid phases coexist within the dome at a unique pressure for a specific temperature. This pressure is designated as the *vapor pressure* of the fluid at that temperature. The length of the isobar (constant pressure) line between the sides of the dome is proportional to the heat input which is required to completely vaporize the fluid at the pressure and corresponding temperature. The fraction of the fluid which is vapor at a condition corresponding to a specific point along the isobar is equivalent to the fraction of its distance from the saturated liquid line, divided by the total length of the isobar within the dome.

The point at the very peak of the dome represents a unique condition of pressure and temperature which is designated as the *critical point* of the fluid. As nitrogen approaches 493 psia (3.40 MPa) and −232.5°F (126.2°K) from any direction, all distinctions between the characteristics of vapor and liquid phases disappear. Liquid being warmed at a pressure above the critical pressure behaves as a dense fluid, which gradually approaches the characteristics of a high-pressure gas at higher temperatures, without passing through any observable phase change.

The vertical lines on a pressure-enthalpy chart correspond to a constant heat content condition. Movement along these lines designates an isenthalpic or adiabatic (no heat input or output) process. Flow through reasonably short or insulated runs of piping or fittings, or at a temperature close to that of the environment, approaches isenthalpic behavior.

When a fluid flowing within a pipe is throttled through a valve, the change in its pressure-temperature-phase and density relationships is essentially isenthalpic. If a fluid is initially a gas which is reduced in pressure, its decrease in pressure and density may be accompanied by a change in temperature (Joule-Thomson effect). In most cases this will be a decrease in temperature, as shown, for example, by nitrogen at 725 psia (5 MPa) and −153.7°F (170°K) following the 60.23 Btu/lb(m) (140kJ/kg) isenthalp to about −215°F (136°K) when throttled to atmospheric pressure. At conditions more remote from the critical point, the temperature change is less dramatic. A rise in temperature may occur when the fluid is well above its critical temperature. This is shown by nitrogen at 80°F (300°K) when throttled to 5800 psia (40 MPa) from a higher pressure, but it is more typically encountered with hydrogen or helium under normal processing conditions.

When a saturated liquid is throttled to lower pressure, an isenthalpic line is followed into the dome, indicating partial vaporization of the downstream fluid. For example, if liquid nitrogen which is initially saturated at 290 psia (2 MPa) and −251.6°F (115.58°K) is throttled to atmospheric pressure, the downstream condition will be about 45 percent vapor. This will be accompanied by a change in density from about 35.77 lb(m)/ft^3 to 0.637 lb(m)/ft^3 (573 to 10.2 kg/m^3), or a factor of 56 increase in volume. If nitrogen vapor is throttled from a point above the dome, it may partially liquefy (retrograde condensation) or, within a very narrow range of conditions, pass through the two-phase region before ending up as all vapor at a final low-pressure condition.

The large change in specific volume which may occur with throttling—and particularly vaporization—may necessitate a substantial increase in the diameter of downstream piping in order to maintain reasonable velocities of the fluid. If the process leads to a two-phase downstream condition, there may be some slippage between the phases (i.e., the relative fraction of the vapor and liquid inventoried in the piping may differ from that of the net throughput). Two-phase flow characteristics can be extremely complex, and determination of this behavior is beyond the scope of this discussion.

An important consideration in the design of a cryogenic piping system arises from recognition that a confined fluid cannot increase in specific volume, or change in density, when heated. Extreme overpressurization can result when a cryogenic liquid which is trapped between valves is warmed, for example by heat leak. Confined nitrogen which is initially liquid at 101.5 psia (0.7 MPa) will [following the 43.70 lb(m)/ft^3 (700 kg/m^3) constant density line] exceed 1160 psia (8 MPa) when warmed to −270.7°F (105°K) and approach 14,500 psia (100 MPa) at −100°F (200°K). This makes overpressure protection mandatory wherever entrapment of a cryogenic liquid or (initially) high-pressure cold gas is possible.

Pressure-enthalpy charts for other cryogenic fluids are similar to those for nitrogen. Charts for oxygen and argon are provided as Figs. C8.2 and C8.3, respectively. Sources of charts for additional fluids are given in the bibliography at the end of this section. The thermodynamic property interrelationships of these fluids are similar to those which have been illustrated for nitrogen.

Rapid exposure of a partially confined cryogenic liquid to heat may result in overpressurization even when some outlet is provided. The possibility of a cryogenic liquid spill into a warmer environment must be considered in designing any enclosure around a piping system.

TABLE C8.5M (Metric) Physical and Thermodynamic Properties of Cryogenic Fluids

	Helium	Hydrogen equil	Hydrogen normal	Neon	Nitrogen	Carbon Monoxide	Air	Fluorine	Argon	Oxygen	Methane	Krypton	Nitric Oxide
Formula	He	e-H2	n-H2	Ne	N2	CO	Mixture	F2	Ar	O2	CH4	Kr	NO
Molecular weight	4	2.02	2.02	20.18	28.01	28.01	28.96	38	39.95	32	16.04	83.80	30.01
Triple point													
Temperature, K		13.83	13.95	24.55	63.15	68.15		53.48	83.81	54.36	90.68	115.76	109.51
Pressure, kPa		7.0	7.2	43.3	12.5	15.4		0.252	69.1	0.15	11.7	73.2	21.9
Heat of fusion, J/g		58.2	58.1	16.26	25.74	30.0		24.2	29.58	13.9	58.6	19.6	76.6
Normal boiling point,													
Temperature, K	4.22	20.27	20.38	27.09	77.35	81.7	78.7/81.7	84.95	87.29	90.19	111.64	119.78	121.38
Density, kg/m^3													
Liquid	124.9	70.8	70.7	1,205	805.4	789	875.4	1524	1,394	1,134	423	2,414	1,269
Vapor	16.89	1.34	1.329	9.58	4.60	4.40	4.51	5.64	5.77	4.49	1.818	8.8	3.04
Heat of vaporization, J/g	20.4	442	448	85.8	199.7	215.8	201.1	174.5	160.78	212.1	510	107.6	459
Specific heat, J/g-K													
Liquid	4.52	9.71	9.75	1.91	2.042	2.15	1.966	1.511	1.07	1.737	3.43	0.55	
Vapor	9.08	12.23	12.20	1.16	1.34	1.22	1.130	0.825	0.56	0.971	2.15	0.26	
Viscosity, g/m-s													
Liquid	0.0036	0.0133	0.0133	0.13	0.17	0.17	0.18	0.237	0.27	0.189	0.12	0.38	
Vapor	0.0012	0.0011	0.0011	0.0042	0.0052	0.0056	0.01	0.0072	0.0070	0.0074	0	0.01	0.01
Thermal conductivity, W/m-K													
Liquid	0.026	0.119	0.119	0.114	0.14	0.140	0.14	0.16	0.12	0.150	0.193	0.090	
Vapor	0.009	0.017	0.017	0.01	0.0070	0.0069	0.01	0.01	0.0057	0.0076	0.01	0	0.01
Critical point													
Temperature, K	5.19	32.98	33.25	44.40	126.2	132.85	132.5	144.3	150.65	154.58	190.55	209.39	180
Pressure, kPa	227.5	1,293	1,297	2,653	3,400	3,494	3,766	5,215	4,898	5,043	4,599	5,496	6,480
Density, kg/m^3	69.64	31.4	31	483.1	313.1	303.9	316.5	574	535.7	436.2	162.7	910.7	517.4
Gas at 101.325 kPa, 294.26 K													
Density, kg/m^3	0.17	0.08	0.08	0.836	1.160	1.161	1.2	1.57	1.66	1.33	0.665	3.48	1.244
Specific heat, J/g-K	5.19	14.84	14.29	1.030	1.041	1.039	1.01	0.83	0.52	0.92	2.226	0.25	0.971
Specific heat ratio	1.67	1.383	1.407	1.67	1.401	1.402	1.4	1.36	1.67	1.4	1.31	1.67	1.40
Viscosity, g/m-s	0.020	0.0089	0.0089	0.031	0.0174	0.0176	0.0183	0.02	0.02	0.0204	0.01	0.03	0.02
Thermal conductivity, W/m-K	0.15	0.190	0.183	0.048	0.0254	0.0247	0.0261	0.03	0.02	0.0263	0.033	0.01	0.026

TABLE C8.5M (Metric) Physical and Thermodynamic Properties of Cryogenic Fluids (*Continued*)

	R-14	Ozone	Xenon	Ethylene	Ethane	Nitrous Oxide	Hydrogen Oxide	Acetylene	Carbon Dioxide	Hydrogen Sulfide	Propylene	Propane	Ammonia
Formula	CF4	O3	Xe	C2H4	C2H6	N2O	HCl	C2H2	CO2	H2S	C3H6	C3H8	NH3
Molecular weight	88.01	48	131.3	28.05	30.07	44.01	36.46	26.04	44.01	34.08	42.08	44.1	17.03
Triple point													
Temperature, K	89.52	80.65	161.36	103.97	89.9	182.33	158.97	192.1	216.58	187.62	87.89	85.47	195.41
Pressure, kPa	0.11	0	81.60	0.12	0	87.9	14	120.0	518	23.2	2E-07	3E-07	6.1
Heat of fusion, J/g	7.95		17.26	119	95.1	149	54.9	144	204.9	69.7	71.4	79.9	332
Normal boiling point,													
Temperature, K	145.09	161.85	165.03	169.38	184.57	184.67	188.15	189.1s	194.67s	212.81	225.46	231.08	239.72
Density, kg/m^3													
Liquid	1633	1354	2941	567.8	544	1233	1190			965	609	581	682
Vapor	7.74	3.70	10.00	2.09	2.056	3.11	2.5	2.10		2.0	2.36	2.42	0.89
Heat of vaporization, J/g	134.1	295.8	95.73	481.4	491	376	443	818s	573s	548	439	428	1,371
Specific heat, J/g-K													
Liquid	0.91		0.35	2.41	2.43		1.61			1.83	2.03	2.246	4.43
Vapor	0.51		0.17	1.37	1.40		0.85			1.02	1.31	1.46	2.24
Viscosity, g/m-s													
Liquid	0.32		0.49	0.164	0.168		0.407			0.42	0.176	0.199	0.262
Vapor	0.01		0.01	0.0058	0.0059	0.01	0.0090			0.01	0.01	0.0064	0.0081
Thermal conductivity, W/m-K													
Liquid	0.09	0.22	0.07	0.19	0.15	0.17	0.34			0.23	0.149	0.129	0.587
Vapor	0.01		0.0033	0.0077	0.0093	0.01	0.01		0.01	0.01	0.0093	0.0114	0.0175
Critical point													
Temperature, K	227.6	261.1	289.74	282.35	305.42	309.6	324.69	308.32	304.12	373.2	365.57	369.8	405.5
Pressure, kPa	3740	5570	5,821	5,042	4,880	7,255	8310	6,139	7,374	8937	4,665	4,240	11,353
Density, kg/m^3	629	537	1,100	214.2	204.6	454	450	231.2	467.8	346	223.4	220.5	235.2
Gas at 101.325 kPa, 294.26 K													
Density, kg/m^3	3.66	1.99	5.47	1.169	1.256	1.836	1.52	1.086	1.832	1.43	1.77	1.861	0.713
Specific heat, J/g-K	0.690	0.825	0.160	1.525	1.737	0.88	0.8	1.67	0.839	1.02	1.52	1.67	2.09
Specific heat ratio	1.16		1.68	1.248	1.20	1.30	1.41	1.26	1.316	1.32	1.21	1.14	1.32
Viscosity, g/m-s	0.017		0.023	0.010	0.0092	0.01	0.01	0.01	0.015	0.0126	0.01	0.01	0.0101
Thermal conductivity, W/m-K	0.0155		0.01	0.020	0.020	0.017	0.014	0.02	0.0159	0.018	0.02	0.017	0.023

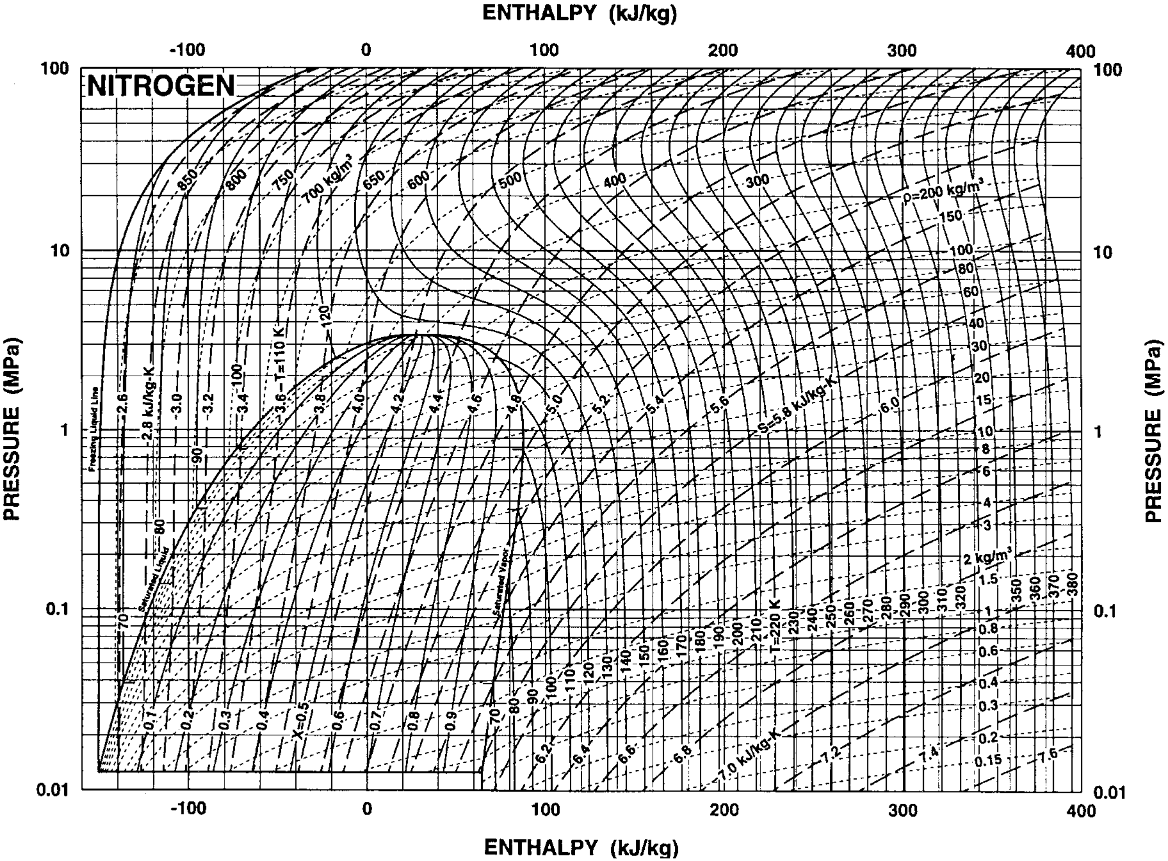

FIGURE C8.1 *P-H* diagram for nitrogen (P = 0.01–100 MPa). (*Reproduced with permission from Jacobsen, Penoncello and Lemmon*, Thermodynamic Properties of Cryogenic Fluids, *Plenum Press, NY, 1997.*)

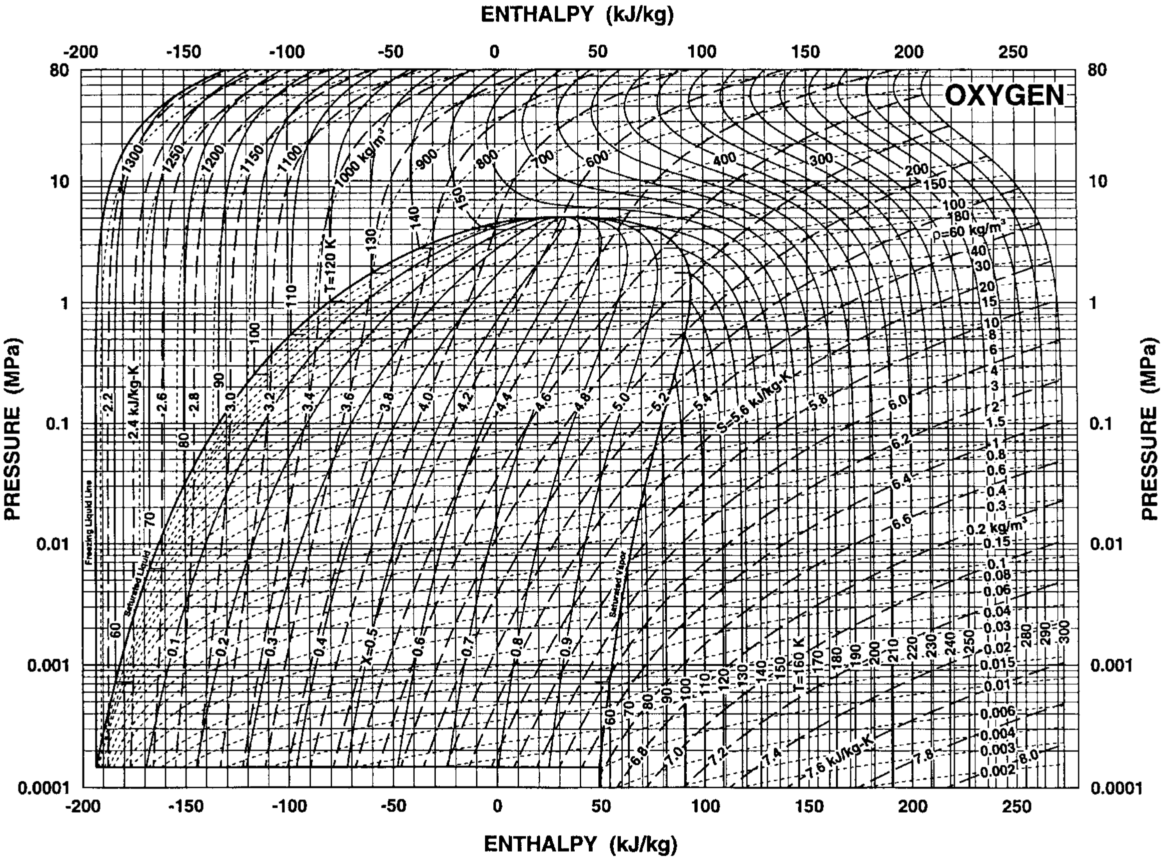

FIGURE C8.2 *P-H* diagram for oxygen ($P = 0.0001–80$ MPa). (*Reproduced with permission from Jacobsen, Penoncello and Lemmon*, Thermodynamic Properties of Cryogenic Fluids, *Plenum Press, NY, 1997.*)

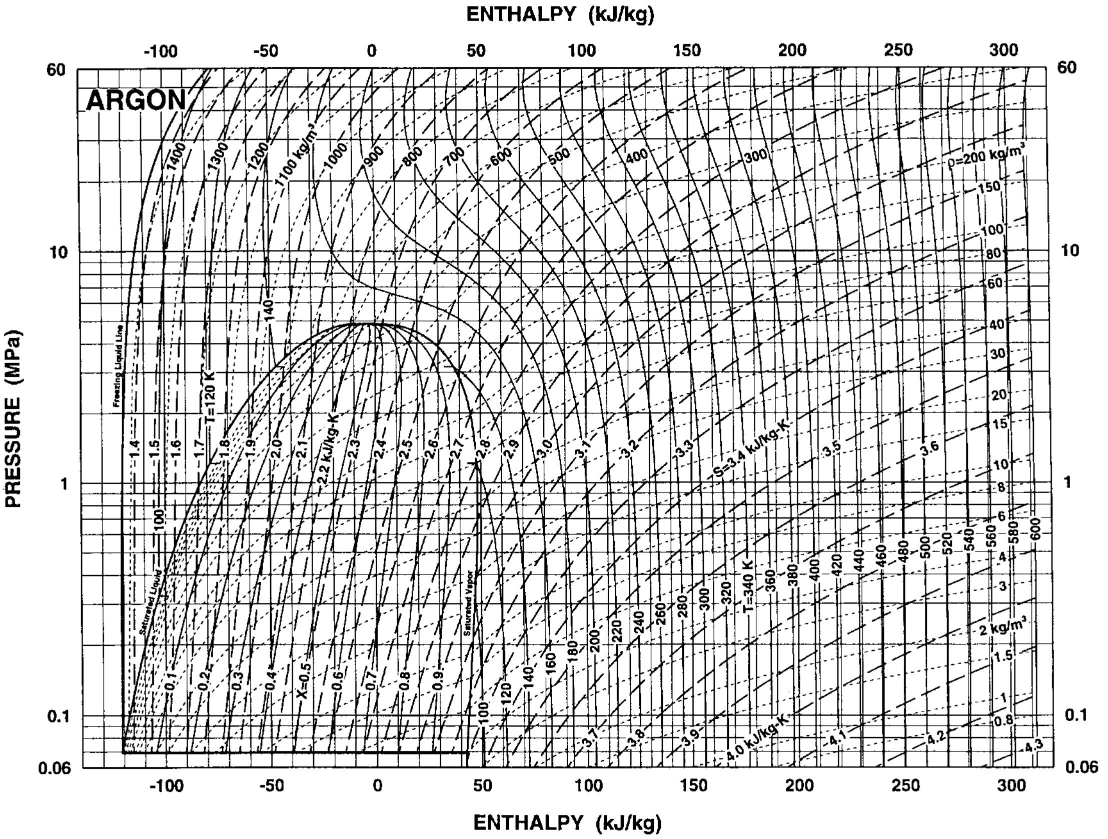

FIGURE C8.3 *P-H* diagram for argon (*P* = 0.06–60 MPa). (*Reproduced with permission from Jacobsen, Penoncello and Lemmon,* Thermodynamic Properties of Cryogenic Fluids, *Plenum Press, NY, 1997.*)

Certain fluids require special consideration. Liquid carbon dioxide, for example, is not stable at atmospheric pressure. (This is indicated on Table C8.5M by a triple-point pressure above atmospheric). Loss of pressure on a liquid carbon dioxide system (or a high-pressure gas system at sufficiently low temperature) will result in dry ice formation.

Physical and thermodynamic property data on cryogenic mixtures are not readily available in easily applied chart or tabular format (as they are for pure fluids). Required design data are usually computer generated from complex correlations for specific cases. Knowledge of pure fluid behavior will, however, provide an awareness of many factors which require consideration in the design of a cryogenic piping system.

Among the specific differences between the behavior of pure fluids and that of mixtures is a potentially much broader range of temperature and pressure conditions within the two-phase region for the latter case, and differences in composition between the individual phases and that of the overall mixture. There is also a possibility of one of the components freezing under conditions wherein other components may exist as gas and/or liquid mixtures. Although a component which is below its normal freezing point may have considerable solubility in the liquid or gas mixture, the possibility of solid formation should be anticipated when any of the components is present in a mixture at a temperature below its triple point. This situation may result from the mixing of two streams, neither of which contains a frozen component.

The designer should have knowledge of the combustion and physiological properties of the fluids being handled. Air and other oxidants must be excluded from piping transporting flammable fluids and from any enclosure (such as a cold box) into which leakage may occur. Conditions which may concentrate flammable contaminants present a danger in air separation. A number of cryogenic fluids are toxic, and all can present an asphyxiation hazard, particularly within confined areas. Venting of these fluids must take into account the possibility that temperature differences from the ambient air may lead to unexpected localized concentration buildups which threaten the safety of personnel and equipment.

BIBLIOGRAPHY

Sources of Physical and Thermodynamic Properties of Cryogenic Fluids:

AGA Gas Handbook, AGA AB, Lindingo, Sweden, 1985.

ASHRAE Thermodynamic Properties of Refrigerants, American Society of Heating, Refrigerating and Air Conditioning Engineers, Atlanta, 1986. Tabular data and charts.

Beaton, C.F. and G.F. Hewitt, *Physical Property Data for the Design Engineer,* Hemisphere Publishing, New York, 1989.

CRC Handbook of Chemistry and Physics, CRC Press, Boca Raton, FL.

Jacobsen, R.T., S.G. Penoncello, and E.W. Lemmon, *Thermodynamic Properties of Cryogenic Fluids,* Plenum Press, New York, 1997. Extensive tables and charts for the major cryogens.

Lange's Handbook of Chemistry, McGraw-Hill, New York.

Matheson Gas Data Book, Matheson, Lyndhurst, NJ, 1980. Includes data for specialty gases, including toxicity, reactivity (flammability, corrosiveness, incompatibility, etc.) and safe handling procedures. *Matheson Unabridged Gas Data Book;* Matheson, East Rutherford, NJ, 1975. More extensive property data for these components.

Maxwell, J.B., *Data Book on Hydrocarbons,* D. Van Nostrand, Princeton, NJ, 1950. Tabular and chart data for light hydrocarbons.

National Standard Reference Data Service of the USSR: A Series of Property Tables, Hemisphere Publishing, Washington, 1987. Comprehensive thermodynamic and physical property tables in volumes covering helium, nitrogen, methane, ethane, oxygen, air, ethylene, halocarbon refrigerants, and rare gases (neon, argon, krypton and xenon).

Perry, R.H. and D.W. Green, *Chemical Engineers' Handbook,* sixth ed., McGraw-Hill, New York, 1984. Tabular data and thermodynamic charts for many cryogens.

Raznjevic, Kuzman, *Handbook of Thermodynamic Tables and Charts,* Hemisphere Publishing, Washington, 1976.

Reid, R.C., J.M. Prausnitz, and T.K. Sherwood, *The Properties of Gases and Liquids,* third ed., McGraw-Hill, New York, 1977. Estimating methods for physical properties of pure fluids and mixtures.

Tables of Thermodynamic and Transport Properties of Air, Argon, Carbon Dioxide, Carbon Monoxide, Hydrogen, Nitrogen, Oxygen, and Steam (originally issued as NBS Circular 564), Pergamon Press, New York, 1960.

TRC Thermodynamic Tables—Hydrocarbons, 1992. *TRC Thermodynamic Tables—Non-Hydrocarbons,* 1993. Thermodynamic Research Center, The Texas A&M University System, College Station, TX. Multiple volumes.

MATERIALS USED IN CRYOGENIC PIPING SYSTEMS

Robert Zawierucha
Manager, Materials Engineering Laboratory
Praxair, Inc.

Important considerations in the selection of materials for cryogenic piping systems include suitable mechanical and physical properties, compatibility with process fluids, fabricability, cost, and compliance with regulatory codes.

The subject of materials for cryogenic applications has been generously treated in the technical literature. For those interested in additional background information, a few selected works in this area appear in the references and bibliography at the end of this section. The prime focus of this section, however, is cryogenic piping for the chemical process industry and commercial cryogenic distribution applications. Consequently, this overview will be deliberately limited in its scope and coverage, and many materials (such as those used in aerospace applications) will not be covered. The materials that will be covered include ferrous alloys, nonferrous alloys, and nonmetallic materials.

FERROUS MATERIALS

Ferrous alloys most often encountered in cryogenic piping applications are usually classified as ferritic or austenitic types. The terms *austenitic* and *ferritic* refer to the predominant crystallographic phases ferrite or austenitic, which are body centered cubic (BCC) and face centered cubic (FCC), respectively.

Ferritic Alloys

Most of the steels in common use are ferritic. This classification also covers steels which are martensitic as a result of heat treatment. Low cost, ease of fabricability, and high strength via heat treatment are major reasons for their popularity. Ferritic alloys, however, can exhibit a ductile-to-brittle toughness transition. The Charpy Impact Test, by which measurements of energy absorption, lateral expansion, and ductile fracture appearance are made, is the *most* common method of measuring this transition.

However, the ductile-to-brittle transition temperature in ferritic steels can be influenced by a number of variables involved in the steel-making process which control the levels of residual elements, inclusion shape, and heat treatment techniques which in turn control grain size and crystallographic morphology. A comprehensive review of these approaches is beyond the scope of this document. However, alloying with nickel, reduction of sulphur levels, and reductions in grain size may be stated as the most popular approaches with ferritic alloys. Table C8.6 contains a listing of some of the most common ferritic alloy steels used in cryogenic piping. Minimum service temperatures are included as well as the applicable ASME specifications.

Table C8.7 and Table C8.7M (Metric) contain a listing of the same materials as

TABLE C8.6 Typical Ferrous Alloys Used in Cryogenic Piping

Alloy	Minimum temperature*	ASME[3] specification	Comment
C-Mn steel[1]	−46°C (−50°F)	SA-333[3] Grade 1	Aluminum killed, fine grain practice
2¼% Ni steel[1]	−73°C (−100°F)	SA-333[3] Grade 7	Aluminum killed, fine grain practice
3½% Ni steel[1]	−101°C (−150°F)	SA-333[3] Grade 3	Aluminum killed, fine grain practice
9% Ni steel[1]	−196°C (−320°F)	SA-333[3] Grade 8	Aluminum killed, fine grain practice
304 Stainless steel[2]	−254°C (−425°F)	SA-312[3]	
304L Stainless steel[2]	−254°C (−425°F)	SA-312[3]	
316 Stainless steel[2]	−196°C (−320°F)	SA-312[3]	
316L Stainless steel[2]	−196°C (−320°F)	SA-312[3]	
347 Stainless steel[2]	−254°C (−425°F)	SA-312[3]	

* Design minimum temperature for which material is normally suited without impact testing other than that required by material specification.

[1] Ferritic steels.

[2] Austenitic steel.

[3] Corresponding ASTM specifications are A333 and A312.

Source: Praxair, Inc.

TABLE C8.7 Typical Mechanical and Physical Properties of Ferrous Alloys

Alloy	ASME[3] spec.	Temperature[4] (°F)	Ultimate tensile strength (ksi)	0.2% Offset Yield strength (ksi)	Elongation in 2 in. (%)	Charpy impact strength (ft-lb.)	Thermal expansion (in/in °F × 10^{-6})	Thermal conductivity (BTU(hr · ft · °F)
C-Mn steel[1]	SA 333 Grade 1	RT −50	55	30	21(1)	70 50	6.5 3.0	30 —
2¼% Ni steel[2]	SA 333 Grade 7	RT −100	65 75	35 40	18(1)	58 20	— —	— —
3½% Ni steel[2]	SA 333 Grade 3	RT −150	100 120	75 87	18(1)	96 22	5.8 4.8	21 —
9% Ni steel[2]	SA 333 Grade 8	RT −320	115 170	90 135	25 27	47 25	5.8 4.8	15.7 7.6
304 stainless steel	SA 312 TP 304	RT −425	85 250	38 70	45 3	115 75	9.0 1.2	9 0
304L stainless steel	SA 312 TP 304L	RT −425	80 225	37 65	45 31	60 60	Same as 304 Same as 304	Same as 304 Same as 304
316 stainless steel	SA 312 TP 316	RT −325	87 197	38 65	45 56	— —	9.0 7.8	9 0
316L stainless steel	SA 312 TP 316L	RT −325	85	38	45	—	Same as 316 Same as 316	Same as 316 Same as 316
347 stainless steel	SA 312 TP 347	RT −425	90 230	65 70	50 38	60 45	8.7 7.2	8.5 0

* Minimum value as stated in ASME Specification SA-333.

[1] Normalized, aluminum killed, fine grain practice.

[2] Quenched and tempered.

[3] Corresponding ASTM specifications are A333 and A312.

[4] RT is room temperature.

Source: Praxair Inc.

TABLE C8.7M (Metric) Typical Mechanical and Physical Properties of Ferrous Alloys

Alloy	ASME[3] spec.	Temperature[4] (°C)	Ultimate tensile strength (MPa)	0.2% Offset yield strength (MPa)	% Elong. in 5.1 cm (%)	Charpy impact strength (Joules)	Thermal expansion (m/m/K × 10⁻⁶)	Thermal conductivity (W/m·K)
C-Mn steel[1]	SA 333 Grade 1	RT −46	379	207	21(1)	95 68	11.7 5.4	52 —
2¼% Ni steel[2]	SA 333 Grade 7	RT −73	448 517	241 276	18(1)	79 27	— —	— —
3½% Ni steel[2]	SA 333 Grade 3	RT −101	689 11379	517 586	18(1)	130 30	10.4 8.6	36 —
9% Ni steel[2]	SA 333 Grade 8	RT −196	793 1172	621 931	25 27	64 34	10.4 8.6	27 13
304 Stainless steel	SA 312 TP 304	RT −254	586 1724	262 483	45 3	156 102	16.2 2.1	15 0
304L Stainless steel	SA 312 TP 304L	RT −254	552 1551	255 469	45 31	81 81	Same as 304 Same as 304	Same as 304 Same as 304
316 Stainless steel	SA 312 TP 316	RT −198	600 1358	262 448	45 56	— —	16.2 12.4	15 0
316L Stainless steel	SA 312 TP 316L	RT −198	586	262	45	—	Same as 316 Same as 316	Same as 316 Same as 316
347 Stainless steel	SA 312 TP 347	RT −254	621 1586	469 483	50 38	81 61	15.6 12.9	14 0

* Minimum value as stated in ASME Specification SA-333.

[1] Normalized, aluminum killed, fine grain practice.

[2] Quenched and tempered.

[3] ASTM specifications are A333 and A312.

[4] RT is room temperature.

Source: Praxair Inc.

Table C8.6 with typical data, including some data not found in the ASME specifications. Included in Tables C8.7 and Table C8.7M are mechanical properties such as strength, impact, and elongation, as well as thermodynamic data such as thermal expansion and thermal conductivity at cryogenic temperatures (boiling point at 1 atmosphere).

Austenitic Alloy Steels

In addition to providing data on the ferritic alloy steels, Tables C8.6, Table C8.7, and Table C8.7M also contain a listing of austenitic stainless steels which are likely to be encountered in cryogenic piping. Most of the austenitic alloy steels used in cryogenic piping are chromium-nickel stainless steels of the AISI 300 type, such as 304, 304L, 316, and 316L. Other stainless steels classified as martensitic, duplex, and precipitation hardening also exist; however, the preceding alloys are most commonly used in cryogenic piping for chemical process and distribution applications.

A major consideration in the use of the 300 Series stainless steels is the improvement in toughness properties they provide and elimination of the sharp ductile-to-brittle transition found in ferritic steels. These alloys have been used to contain and distribute liquid hydrogen and helium. Consequently, while the austenitic stainless steels were originally developed for corrosion resistance, their toughness and excellent fracture properties are what led to their selection for cryogenic piping applications.

Of the 300 Series alloys, the AISI 304 composition is the most popular as measured by tonnage. It should be noted that there is a preference for AISI 316L in the electronics industry for the distribution of high-purity gases that are free of particulates. Furthermore, piping and tubing used in this application are frequently electro-polished, and the trend is for an increase in electro-polishing for ultra-high-purity applications.

Cast versions of the common austenitic stainless steels may be used if valve applications exist. CF3, CF3M, CF8, and CF8M are cast equivalents of 304L, 316L, 304, and 316, respectively. Note that the cast stainless steels have been optimized for castability, and increased delta ferrite levels may adversely affect toughness at cryogenic temperatures. Similar effects may be observed in austenitic weld filler metals, and both castings and weld fillers should be well characterized and qualified prior to use in cryogenic piping systems.

NONFERROUS ALLOYS

Nonferrous alloys encountered in cryogenic piping are usually of the aluminum, cuprous, or nickel families. None of the three alloy families exhibit ductile-to-brittle toughness transition due to the FCC crystal lattice. Common nonferrous alloys used in cryogenic piping appear in Table C8.8, Table C8.9, and Table C8.9M (Metric).

Aluminum Alloys

Common aluminum alloys used in cryogenic process piping do not represent the gamut of what is available in aluminum alloys. The high-strength aluminum alloys

TABLE C8.8 Typical Nonferrous Alloys Used in Cryogenic Piping

Alloy	Tempers	Minimum temperature	ASME[1] spec.
1100 Aluminum	O, H11	−254°C (−452°F)	SB 210
3003 Aluminum	O, H112	−254°C (−452°F)	SB 210
5052 Aluminum	O, H32	−254°C (−452°F)	SB 210
5083 Aluminum	O, H112	−254°C (−452°F)	SB 210
5086 Aluminum	O, H112	−254°C (−452°F)	SB 210
6061 Aluminum	T6	−254°C (−452°F)	SB 210
Copper (C10200, C12200)	Annealed	−198°C (−325°F)	SB 75
Copper-nickel (70600)	Annealed	−198°C (−325°F)	SB 467
Copper-nickel (C71500)	Annealed	−198°C (−325°F)	SB 467
Monel 400, Al-Cu alloy	Annealed	−198°C (−325°F)	SB 165

* Design minimum temperature for which material is normally suitable without impact testing other than that required by material specification.

[1] Corresponding ASTM specifications are B75, B165, B210 and B467.

Source: Praxair Inc.

commonly used in aerospace applications are not used in the chemical process industry because of the lack of ASME Code coverage or other considerations such as corrosion.

Aluminum compositions of the 5083 and 6061 types constitute the highest-strength alloys used in cryogenic applications, and tempers of these alloys are suitable at temperatures as low as −452°F (−254°C). From the toughness standpoint, 5083 would be preferred. However, prolonged exposure to temperatures as high as 152°F (66°C) during thaws can result in both a reduction in corrosion resistance and toughness. For low-strength applications, the 3000 series are also used.

Copper and Cuprous Alloys

Most of the early work in the cryogenic industry was accomplished through the use of copper process vessels, piping, and tubing. Aluminum has extensively replaced copper and cuprous alloys in the fabrication or air separation plants. However, copper and cuprous piping are still extensively used in piping and tubing runs from cryogenic tankage for several reasons which include ease of fabrication (e.g., brazing, soldering), resistance to ignition, and combustion resistance in oxygen-enriched systems. It may be noted that orbital arc-welded stainless piping systems are increasingly replacing cuprous piping for the delivery of particulate and contaminant-free electronic grade gases.

TABLE C8.9 Typical Mechanical and Physical Properties of Nonferrous Alloys*

Alloy	ASME[1] Spec.	Temp. (°F)	Ultimate tensile strength (ksi)	0.2% Offset yield strength (ksi)	Elongation in 2 in. (%)	Charpy impact strength (ft · lb)	Thermal expansion (in/in °F × 10^{-6})	Thermal conductivity [BTU(h · ft · °F)]
1100 Aluminum 0, H112	SB-210	RT	13S 24H	5S 152H	40S 10H	16S 70H	13	125
		−452	24S	8S	56S		5	160
3003 Aluminum 0, H112	SB-210	RT	16S 29H	6S 186H	35S 7H	16S 70H	12	92
		−452	32S	9S	48S		5	85
5052 Aluminum O, H32	SB-210	RT	43S 46H	37S 290H	12S 8H		13.2	75
		−452	76S 86H	47S 379H	42S 30H			7
5083 Aluminum 0, H1112	SB-210	RT	42S 44H	21S 193H	22S 16H		13	68
		−452	63S	23S	32S		5	4
5086 Aluminum 0, H112	SB-210	RT	38S 42H	17S 117H	22S 12H		13.2	73
		−452	78S 96H	20S 179H	38S 30H			
6061 Aluminum T6	SB-210	RT	45	40	12	10	10	99
		−452	70	58	25	12	2	
Copper (C10200, C1200)	SB-75	RT	33	10	45	56	9.5	150
		−452	52	14	69	75	5.0	75
90/10 Cu-Ni CDA 706	SB-467	RT	44	16	42		9.5	26
		−325						
70/30 Cu-Ni CDA 715	SB-467	RT	44	20	40	79	9	17
		−325	85	31	60	87		
Monel 400	SB-165	RT	80	25	42	56	7.5	15
		−325	115	50	64	50	2.5	5

* The letters S and H designate soft and hardened conditions respectively.

[1] Corresponding ASTM specifications are B75, B165, B210 and B467.

Source: Praxair, Inc.

TABLE C8.9M (Metric) Typical Mechanical and Physical Properties of Nonferrous Alloys*

Alloy	ASME[1] Spec.	Temp. (°C)	Ultimate tensile strength (MPa)	0.2% Offset yield strength (MPa)	Elongation in 5.1 cm (%)	Charpy impact strength (Joules)	Thermal expansion (m/m/K $\times 10^{-6}$)	Thermal conductivity (W/(m·K))
1100 Aluminum 0, H112	SB-210	RT −254	90S 165H 165S	34S 152H 55S	40S 10H 56S	22S 95H	23 9	216 450
3003 Aluminum 0, H112	SB-210	RT −254	110S 200H 221S	41S 186H 62S	35S 7H 48S	22S 95H	21 9	159 147
5052 Aluminum 0, H32	SB-210	RT −254	296S 317H 524S 593H	255S 290H 324S 379H	12S 8H 42S 30H		23	130 12
5083 Aluminum 0, H1112	SB-210	RT −254	290S 303H 434S	145S 193H 159S	22S 16H 32S		23 9	117 7
5086 Aluminum 0, H112	SB-210	RT −254	262S 290H 538S 662H	117S 117H 138S 179H	22S 12H 38S 30H		23	126
6061 Aluminum T6	SB-210	RT −254	310 483	276 345	12 25	14 16	18 4	171
Copper (C10200, C12200)	SB-75	RT −198	228 359	69 97	45 69	76 102	17 9	251 130
90/10 Cu-Ni CDA 706	SB-467	RT −198	303	110	42		17	45
70/30 Cu-Ni CDA 715	SB-467	RT −198	303 586	138 214	40 60	107 118	16	29
Monel 400	SB-165	RT −198	552 793	172 345	42 64	68 68	13 5	26 16

* The letters S and H designate soft and hardened conditions respectively.

[1] Corresponding ASTM specifications are B75, B165, B210 and B467.

Source: Praxair, Inc.

Nickel Alloys

While nickel alloys could be used in cryogenic piping systems on the basis of their mechanical properties, their high cost generally precludes their use. One major exception is the use of Monel,® a nickel-copper alloy, which may be used in oxygen systems to minimize ignition tendencies where there is concern of impingement or the potential for high velocities.

NONMETALLIC MATERIALS

Although the bulk of the materials used in cryogenic pipelines are metals, nonmetallic materials have critical functions in cryogenic pipeline components such as valves and insulation. Numerous nonmetallic components have been used in cryogenic pipeline applications, and it would be beyond the scope of this section to cite them all. A brief listing of some of the more common nonmetallic materials used in pipeline components is found in Table C8.10, Table C8.11, and Table C8.11M (Metric).

TABLE C8.10 Typical Examples of Nonmetallic Materials Used in Cryogenic Piping

Application	Material
Gaskets	Durabla (bonded or compressed asbestos) Grafoil (flexible graphite)
Insulation (fiber)	Mineral wool Fiberglass
Insulation (foam)	Polyurethane Styrofoam Foamglass(R)
Insulation (powder)	Perlite Vermiculite
Insulation (sheet)	Mylar Aluminum opacified paper
Insulation (support brock)	Transite Micarta
Valve packing, seals, and lubricants	Viton KEL-F Glass-reinforced Teflon Fluorolube

Source: Praxair Inc.

TABLE C8.11 Typical Mechanical and Physical Properties of Nonmetallic Materials

Material	Tensile strength (ksi)	Modulus of elasticity (ksi)	Specific gravity	Thermal expansion (in/in/°F × 10^{-5})	Thermal conductivity [Btu/(h · ft · °F)]	Specific heat (Btu · lb · °F)
Durabla (asbestos gasket material)	4–11					
Grafoil (flexible graphite)	.75–1.00	200	1.1	0.02	432*	0.7
Mineral wool fiber insulation	0.27		0.15–0.2	0		
Fiberglass fiber insulation	50–500	20,000		0.5–0.8		
Perlite powder insulation						
Vermiculite powder insulation			0.14			
Mylar sheet insulation	17–18 36	700 1600	1.39		0.02	
Aluminum opacified paper sheet insulation	No longer available					
Transite insulation block						

* Through thickness conductivity.
Source: Praxair Inc.

TABLE C8.11M (Metric) Typical Mechanical and Physical Properties of Nonmetallic Materials

Material	Tensile strength (MPa)	Modulus of elasticity (MPa)	Specific gravity	Thermal expansion (m/m/K × 10^{-6})	Thermal conductivity [W/(m · K)]	Specific heat J/(kg · K)
Durabla (asbestos gasket material)	27–76					
Grafoil (flexible graphite)	5–7	1378.	1.1	0.36	747*	2929.
Mineral wool fiber insulation	1.9		0.15–0.2	0		
Fiberglass fiber insulation	344–3440	137,880.		9–14		
Perlite powder insulation						
Vermiculite powder insulation			0.14			
Mylar sheet insulation	117–124 248	4826. 11,030.	1.39		0.035	
Aluminum opacified paper sheet insulation	No longer available					
Transite insulation block	No longer available					

* Through thickness conductivity.
Source: Praxair Inc.

Again, compatibility and mechanical and physical properties must be considered in the selection of nonmetallic materials. With respect to compatibility, liquid oxygen is the commercial cryogen of greatest concern because of its large usage. Typical tests or experimental parameters covered in the selection of nonmetallic materials for oxygen service include *autoignition temperature, heat of combustion, impact test*, and *oxygen index*. Materials that are compatible with oxygen generally have high autoignition temperatures, low heats of combustion, high energy absorption in impact tests, and high oxygen index values. Reference 1 gives advice about the specific criteria levels required for different applications. It is recommended that nonmetallic materials be qualified for oxygen service on a batch-by-batch basis.

Liquid fluorine is of greater concern from the compatibility standpoint with respect to nonmetallic materials. However, the industrial usage of liquid fluorine is very low in comparison to the other industrial gases. Reference 2 should be consulted for information on liquid fluorine systems.

The mechanical and physical properties of significance in the use of nonmetallic materials relate to their application in the form of insulation, gaskets, seals, and lubricants. It may be noted that they are not currently used as structural materials. Development of composites is expected to significantly increase the use of nonmetallic materials as structural components in cryogenic piping.

JOINING

Welding is the most common joining technique used in cryogenic piping. Brazing and soldering may be encountered in cuprous piping. With the recent trends toward high purity, there is a greater tendency to use orbital arc-welded stainless steel piping in lieu of brazed copper alloy piping.

Joint selection, filler metals, process qualification, and welded qualification are covered in detail by the ASME Pressure Piping Code, Section B31.3, Process Piping Code. Generally, areas which have been welded, brazed, or soldered experience thermal effects which may exhibit reduced strength, ductility, or toughness if not properly controlled. Appropriate mechanical tests as specified by applicable codes must be performed to verify suitability.

Within components such as cold boxes there may be occasions when transitions must be made between metals such as stainless steel and aluminum, forming joints which are difficult to weld directly or are unweldable. Transition joints are commercially available which may be classified as mechanical, brazed, diffusion bonded, or explosion bonded. Such joints have been successfully used in cryogenic applications. However, caution is advised in order to avoid in-service problems such as leaks, embrittlement, or actual joint separation. Careful vendor evaluation, joint design evaluation, and attention to fabrication details are required when dissimilar metal joints are required.

ENVIRONMENTAL AND SAFETY CONCERNS

A number of metallic and nonmetallic materials may be toxic, carcinogenic, tetragenic, or have other properties which are considered environmentally undesirable (i.e., effects on the ozone layer). For example, the use of asbestos-containing materials such as Durabla or certain vermiculite ores may be further restricted or phased out. Similar concerns exist with cadmium-bearing brazing alloys. The recent concern about ozone depletion caused by chlorofluorocarbons could affect polyurethane foam production. Consequently, many common materials currently used in cryogenic piping systems are likely to be phased out over time.

Recent legislation mandates that material safety data sheets (MSDS) be obtained for all industrial substances that are in industrial use. This obviously includes the metallic and nonmetallic materials used in cryogenic piping. Failure to comply with the requirements and implementation provisions of the original legislation can have serious consequences for fabricators.

Equipment used in oxygen services has additional requirements such as cleaning and velocity limitations which must be considered. Oxygen equipment must be cleaned to eliminate contaminants such as hydrocarbons and metal particulates, which could serve as ignition sources. Reference 3 provides a general discussion of this issue. In addition, velocity limitations may be placed on certain classes of material to preclude ignition by particle impingement. See Reference 4 for velocity limitations and design considerations pertinent to oxygen systems.

Other industrial gases that might be encountered in cryogenic pipelines have specific hazards associated with them (i.e., flammability, toxicity, etc.). These are summarized in MSDS forms available from industrial gas suppliers.

REFERENCES

1. “Guide for Evaluating Nonmetallic Materials for Oxygen Service,” ASTM Specification G63, American Society for Testing and Materials, Philadelphia, PA.
2. “Design Handbook for Liquid Fluorine Ground Handling Equipment,” Technical Report No. AFRPL-TR-65–133, Air Force Rocket Propulsion Laboratory, Edwards Air Force Base, 1965.
3. J.G. Hust and Cark, A.F., “A Survey of Compatibility of Materials, with High Pressure Oxygen Service,” *Cryogenics*, vol. 13, 1973, pp. 325–335.
4. “Cleaning Equipment for Oxygen Service, ” CGA Pamphlet G.4.1, Compressed Gas Association, Arlington, VA.

BIBLIOGRAPHY

Handbook on Materials for Superconducting Machinery, Technical Report MCIC-HB-04, Metal & Ceramics Information Center, Battelle, Columbus, OH, November 1974.

Metals Handbook (desk edition), American Society for Metals, Cleveland, OH, 1985, pp. 20.24–20.34.

Reed, R. P., and Clark, A. F., “Materials at Low Temperatures,” American Society for Metals, Metals Park, OH, 1983.

Schwartzberg, F. R., *Cryogenic Materials Data Handbook*, vols. I and II, Technical Report AFML-TR-64–280, Wright Patterson Air Force Base, OH, July 1970.

PIPING SYSTEM DESIGN—FLUIDS

M. J. Lockett
Corporate Fellow
Praxair, Inc.

PIPE SIZING CRITERIA

For all cryogenic fluids, except oxygen gas, pipe sizing is based on pressure drop considerations (for oxygen gas, see the section "Oxygen Gas Piping"). The pressure drop criteria presented in Chap. B8 are applicable to cryogenic fluids when the fluid is either in the liquid phase or gas phase flow regime.

Heat transfer into a saturated cryogenic liquid or a drop in pressure can cause a portion of the liquid to flash into a gas (see the section "Properties of Cryogenic Fluids"). A two-phase (gas-liquid) flow condition must then be considered when determining the required pipe size and pressure head requirements (see the next section). Two-phase flow will result in larger pressure drop losses or a larger pipe size requirement than will liquid phase flow. Therefore, whenever possible, the fluid should be maintained in a single-phase flow condition. The liquid can be subcooled to prevent flashoff due to pressure decreases such as across throttling valves. Use of pipe insulation can reduce the heat leak into the piping, thereby also reducing flashoff.

TWO-PHASE FLOW

For prediction of the pressure drop experienced by a two-phase cryogenic fluid flowing along a pipe, the usual practice is to divide the pipe into sections for calculation purposes (see Fig. C8.4). At the beginning of a given pipe section,

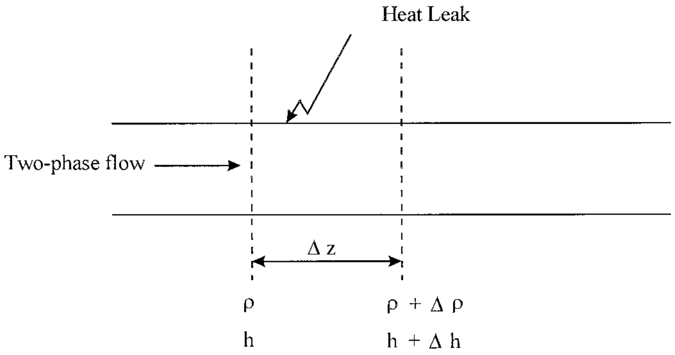

FIGURE C8.4 Pipe section.

conditions are assumed to be known. The pressure drop over the section is then calculated based on the conditions at the beginning of the section, and so the pressure at the end of the section can be determined. The heat leak into the section is estimated from heat transfer correlations. An enthalpy balance over the section then allows the enthalpy (h) at the end of the section to be calculated (potential and kinetic energy changes over the section can usually be neglected). Knowledge of the pressure and enthalpy at the end of the section allows new conditions to be calculated from the thermodynamic properties of the cryogenic fluid. Such conditions include the temperature, vapor fraction, and physical properties of each phase. The calculations are then repeated for the next section, and so on to the end of the pipe.

Two-Phase Pressure Drop

The total pressure drop for two-phase flow consists of three parts; the frictional, gravitational, and accelerational pressure drops, so that,

$$\left(\frac{dp}{dz}\right)_{TP} = \left(\frac{dp_F}{dz}\right) + \left(\frac{dp_G}{dz}\right) + \left(\frac{dp_A}{dz}\right) \tag{C8.1}$$

where p is the pressure, $p$dl ft^{-2} (Nm^{-2})and z is the distance along the pipe, ft (m).

Many correlations have been proposed to predict the frictional pressure drop (dp_F/dz) and they are discussed in Chap. B8. The earliest correlation, which is still widely used, is that of Lockhart and Martinelli.[1]

To use this correlation, the steps are:

1. Calculate the Reynolds number for each phase flowing alone in the pipe.

$$\mathrm{Re}_L = \frac{M_L D}{A\mu_L} \tag{C8.2}$$

$$\mathrm{Re}_G = \frac{M_G D}{A\mu_G} \tag{C8.3}$$

where M_L, M_G = liquid and vapor flow rates, lbs^{-1} (kg s^{-1})
A, D = pipe cross sectional area, ft^2 (m^2), and diameter, ft (m)
μ_L, μ_G = liquid and vapor viscosities, lb ft^{-1} s^{-1} (Nsm^{-2})

2. Calculate the frictional pressure drop for each phase flowing alone in the pipe.

$$\left(\frac{dp_F}{dz}\right)_L = \frac{2k_L(\mathrm{Re}_L)^{-n}\rho_L}{D}\left(\frac{M_L}{A\rho_L}\right)^2 \tag{C8.4}$$

$$\left(\frac{dp_F}{dz}\right)_G = \frac{2k_G(\mathrm{Re}_G)^{-m}\rho_G}{D}\left(\frac{M_G}{A\rho_G}\right)^2 \tag{C8.5}$$

Where ρ_L, ρ_G = liquid and vapor densities, lb ft^{-3} (kg m^{-3}).

The following table can be used to determine k_L, k_G, n, and m:

Liquid	Vapor	Re_L	Re_G	k_L	k_G	n	m
t	t	>2,000	>2,000	0.046	0.046	0.2	0.2
v	t	<1,000	>2,000	16	0.046	1.0	0.2
t	v	>2,000	<1,000	0.046	16	0.2	1.0
v	v	<1,000	<1,000	16	16	1.0	1.0

The value of 0.046 is based on smooth pipes, and *t* and v denote turbulent or laminar flow respectively.

3. Calculate X from

$$X = \left[\left(\frac{dp_F}{dz}\right)_L \Big/ \left(\frac{dp_F}{dz}\right)_G\right]^{0.5} \tag{C8.6}$$

4. Use Fig. C8.5 to determine ϕ_L or ϕ_G.

5. Calculate the frictional pressure drop for two-phase flow from either,

$$\left(\frac{dp_F}{dz}\right) = \phi_L^2\left(\frac{dp_F}{dz}\right)_L \quad \text{or} \quad \left(\frac{dp_F}{dz}\right) = \phi_G^2\left(\frac{dp_F}{dz}\right)_G \tag{C8.7}$$

This correlation typically allows prediction of the frictional pressure drop to about ±30%, but the discrepancy can be greater under some circumstances.

Where the flow is other than horizontal, the gravitational pressure drop becomes significant, and in vertical flow it is the dominant term. It may be calculated from

$$\left(\frac{dp_G}{dz}\right) = g\sin\theta[\alpha\rho_G + (1-\alpha)\rho_L] \tag{C8.8}$$

where g = acceleration due to gravity, ft s^{-2} (ms^{-2})
α = void fraction
θ = angle to horizontal, deg.

Numerous correlations are available for the void fraction, and that of Lockhart and Martinelli is shown in Fig. C8.5. As it was derived originally for horizontal flow, it can be rather inaccurate for vertical flow. Other void fraction correlations are mentioned in Chap. B.8.

The accelerational pressure drop is often negligible for two-phase flow of cryogenic fluids. It can be estimated from,

$$\left(\frac{dp_A}{dz}\right) = \frac{1}{A^2}\frac{d}{dz}\left[\frac{M_G^2}{\rho_G\alpha} + \frac{M_L^2}{\rho_L(1-\alpha)}\right] \tag{C8.9}$$

where the expression on the right-hand side is evaluated over the pipe section.

The total pressure drop calculated by this method should be increased by at

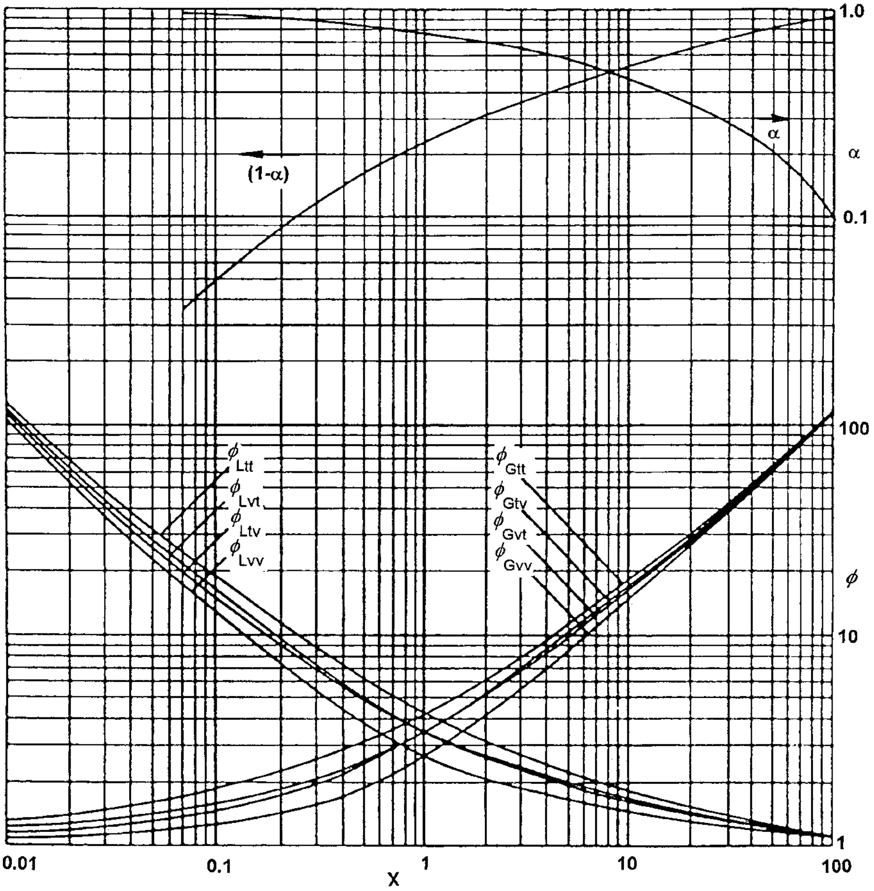

FIGURE C8.5 Lockhart-Martinelli correlation.

least 30% for design safety. A final check should also be made for critical, or choked, flow at the downstream end of the pipe. An equation proposed by Schweppe and Foust[2] for the maximum possible flow rate is

$$M_c = -\left[\frac{A^2}{\left(\frac{\partial v}{\partial p}\right)_s}\right]^{0.5} \tag{C8.10}$$

where M_c = maximum flow rate of the mixture, lbs^{-1} (kg s^{-1}).

v = specific volume of the mixture based on homogenous flow, $\text{ft}^3\ \text{lb}^{-1}$ ($\text{m}^3\ \text{kg}^{-1}$).

so that

$$v = \frac{M_G / \rho_G + M_L / \rho_L}{M_L + M_G} \tag{C8.11}$$

and the partial derivative is evaluated under isentropic conditions. It can be calculated for conditions at the downstream end of the pipe from the thermodynamic properties of the cryogenic fluid.

An alternative version, involving the enthalpy, h, which is sometimes more convenient, is

$$M_c = -\left[\frac{A^2}{\left(\frac{\partial v}{\partial p}\right)_h + v\left(\frac{\partial v}{\partial h}\right)_p}\right]^{0.5} \tag{C8.12}$$

where the two partial derivatives are evaluated at constant enthalpy and constant pressure respectively.

If M_c is less than the assumed total flow rate, the pressure drop calculation should be repeated with a reduced total flow rate or an increased pipe diameter.

OXYGEN GAS PIPING

For oxygen gas, the fluid velocity must also be considered when determining the pipe size. The allowable velocity is a function of the oxygen gas pressure and temperature and the material of the piping and its components. For systems with pressures up to 1000 psi (69 bar) and a maximum temperature of 200°F (366 K), carbon steel and stainless steel piping are acceptable provided that the maximum allowable gas velocity as shown in Fig. C8.6 is not exceeded.

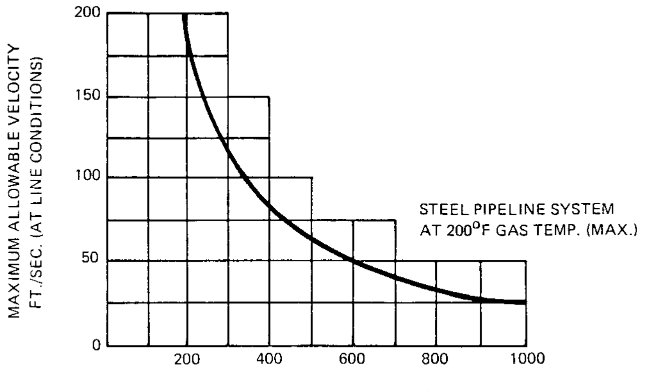

FIGURE C8.6 Maximum velocity versus internal pressure for steel pipelines. (Ref. 3.)

When the velocity is exceeded, copper or a copper-base material such as brass or monel is required. The velocity criteria should also be considered at valves. For example, sonic velocity can occur at throttling and safety valves. Copper-base materials are required for the parts of the valves where high velocity can occur.

When oxygen gas impinges directly on ferrous piping, such as from a side back feed line, the allowable velocity must be reduced to one-half the values given in Fig. C8.6, or the impingement surface must be a copper-base alloy. When the velocity returns to acceptable levels, the copper base alloy is extended for 8 diameters in pipe length before returning to ferrous piping. For a more thorough discussion of material requirements for oxygen service, see Ref. 3 at the end of this section.

PIPING ARRANGEMENT

Consideration of the cryogenic fluid properties has an effect on the piping arrangement. Because the cryogenic fluid is colder than ambient air, the continuous heat leak from ambient air to the piping system is a design consideration.

Whenever cryogenic liquid can be trapped between two valves, a line block safety valve must be provided to prevent overpressurization caused by heat transfer from the ambient air to the cryogenic fluid. As noted earlier in the discussion of cryogenic fluids, containment of the pressure increase caused by vaporization of the trapped cryogenic liquid is not practical and use of a line block safety valve is mandatory. When cryogenic gas can be trapped between two valves, the pressure rise should be calculated to ensure that the piping system design pressure is not exceeded when the trapped gas warms up to ambient temperature. When the design pressure can be exceeded, a line block safety valve should be used.

Traps are normally designed into liquid piping systems to prevent undesirable heat leak from a branch of the piping system when it is not in use. To form a trap at the branch and main run connection, a vertical rise equal to a minimum of 2 pipe diameters is provided in the branch. Heat transfer into the nonflowing branch will cause the liquid to vaporize and a gas-liquid interface will form in the trap. The gas-liquid interface in the vertical rise will prevent flow from the main run into the nonflowing branch. Undesirable heat transfer and liquid loss is therefore reduced. When liquid flow is required through the branch, the liquid will flow through the trap.

When a cryogenic liquid line is initially put in service, the warm piping will cause *liquid flashoff,* which could restrict the flow during the two-phase flow transient period. When it is possible to precool the lines, the piping can be sized for liquid phase flow, which will result in smaller piping. If rapid cooldown is required, the piping must be sized for two-phase flow.

As a good approximation, the amount of liquid required to cool down a line is

$$W = \frac{M_m C_{pm} \Delta T_m}{(H_v - H_1)} \tag{C8.13}$$

where W = liquid, lb (kg)

M_m = line to be cooled, lb (kg)

C_{pm} = mean specific heat of line, Btu/(lb · °F), (kJ kg^{-1}K^{-1})

ΔT_m = temperature change through which line is cooled, °F(K)

H_v = enthalpy of fluid as a vapor at ambient conditions, Btu/lb (kJ kg^{-1})

H_1 = initial enthalpy of liquid when entering line, Btu/lb (kJ kg^{-1})

REFERENCES

1. R.W. Lockhart and R.C. Martinelli, *Chem. Eng. Prog.,* ***45,*** 39, 1949.
2. J.L. Schweppe and A.S. Foust, *Chem. Eng. Prog.,* ***49,*** Symp. Ser. 5, 77, 1953.
3. CGA Pamphlet G-4.4, ''Industrial Practices for Gaseous Oxygen Transmission and Distribution Piping Systems,'' Compressed Gas Association, Inc. Arlington, VA.

PIPING SYSTEM DESIGN—MECHANICAL

A. R. Belair
Engineering Manager
Praxair, Inc.

APPLICABLE CODES AND MATERIALS

The applicable code for the design of cryogenic piping systems is the ASME B31.3 Process Piping Code.[1] B31.3 presents a design procedure to determine the stresses in the pipe due to fluid pressure, pipe and fluid weight, and thermal expansion and contraction of the pipe. The code also lists piping materials by ASTM specification number. The allowable stress as a function of design temperature is listed for each material. The listed minimum design temperature is used to determine which materials are suitable for cryogenic service.

Some of the materials can be used in lower-temperature service, provided the specified impact test is performed to ensure adequate ductility at the lower temperature. The B31.3 Code also lists pipe fittings and bolting by ASTM number so that materials compatible with the pipe can be selected. For more discussion of materials, see the section ''Materials Used in Cryogenic Piping Systems.''

Other piping design considerations such as corrosion resistance, chemical compatibility, and material melting point can affect the material selection. Some examples of these conditions include:

1. Copper-base materials are not recommended for ammonia or acetylene service because copper alloys react with the fluid.
2. Stainless steel piping is recommended for flammable fluids such as hydrogen rather than lower-melting-point materials such as copper or aluminum unless the piping is protected to prevent exposure to heat in the event of a fire.
3. Copper-base materials (such as monel) are recommended for high-velocity oxygen service.

See Chap. B2 for discussion of formulas which can be used to calculate the pipe wall thickness as required to contain the fluid pressure.

ECONOMIC PIPE SIZING

When a piping system is being designed, an initial pipe size must be selected before the piping configuration is developed. This subsection provides recommendations for selecting the initial pipe size. However, after the piping system is developed, the pipe size selection is finalized by calculating the pressure drop based on the actual piping configuration and comparing it to the pressure head available.

For cryogenic liquid lines, the initial pipe size should be selected so that the liquid velocity is in the range of 5 ft/s (1.5 m/s).

For cryogenic liquid lines, the initial pipe size should be selected based on the available pressure head (see section ‘‘Piping System Design—Fluids,’’ subsection ‘‘Pipe Sizing Criteria’’). When estimating pipe length and number of fittings to calculate the initial pipe size, add 50 percent to the total resistance coefficient, *K*, to allow for pipe loops and extra fittings as may be required for thermal flexibility. To ensure good process control, one-third of the total system pressure drop should be allotted to the control valves.

Except for oxygen gas, as discussed in the section ‘‘Piping System Design—Fluids,’’ subsection ‘‘Oxygen Gas Piping,’’ there are no specific gas velocity limitations. However, the gas velocity is normally less than 400 ft/s (130 m/s) to avoid noise problems and excessive pressure drop. For systems with pressures up to 400 psi (2750 KPa), gas velocities in the range of 50 to 200 ft/s (15 to 65 m/s) are common.

When the pipe size of the gas line affects the plant power consumption, the initial pipe size can be selected by using the following equation. The equation calculates the pipe diameter that provides the minimum total cost; that is, pipe capital cost plus operating power cost.

Economical pipe sizing (Imperial units)

$$D = (0.0275)\left(\frac{MTUCY}{EA}\right)^{0.16}\frac{Q^{0.48}}{P^{0.32}} \qquad \text{(C8.14)}$$

where M = molecular weight
T = absolute temperature, K
U = average compression temp., K
C = cost of power, \$/kW · h
Y = evaluation period, years
E = compressor overall efficiency
A = pipe cost fraction, \$ per 100-ft/in pipe diameter
Q = flow rate, ft^3/h @ 70°F, 14.7 psia
P = absolute pressure, psia
D = inside pipe diameter, in

Economical pipe sizing (Metric units)

$$D = (7.254)\left(\frac{MTUCY}{EA}\right)^{0.16}\frac{Q^{0.48}}{P^{0.32}} \qquad \text{(C8.14M)}$$

where M = molecular weight
T = absolute temperature, K
U = average compression temp., K
C = cost of power, \$/megajoule
Y = evaluation period, years
E = compressor overall efficiency
A = pipe cost fraction, \$ per 100-m/mm pipe diameter
Q = flow rate, m^3/h @ 0°C
P = absolute pressure, KPa
D = inside pipe diameter, mm

PIPING COMPONENTS

The types of valves used in cryogenic service are similar to those used for conventional fluids, except that the valves may require unique design features due to the cryogenic fluids. Metallic and nonmetallic materials must be suitable for the low-temperature service. See the discussions on materials in the section ''Materials Used in Cryogenic Service.'' Valve types used include gate, globe, butterfly, ball, check, and safety.

The stems of gate, globe, butterfly, and ball valves are extended so that the valve packing and operator remain at ambient temperature when cryogenic fluid is in the valve body. The valves are oriented so that the packing is at a higher elevation than the valve body, so that a gas pocket can form inside the valve's extension tube, thereby making the extension tube more effective at insulating the packing from the cold temperatures. Figure C8.7 shows an extended stem gate valve.

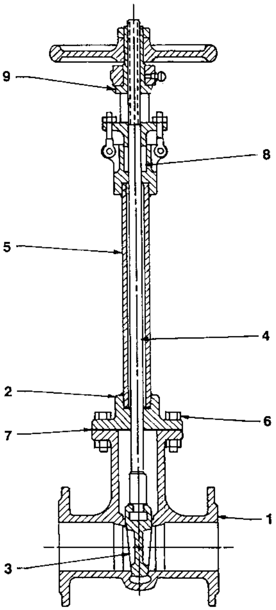

LEGEND

ITEM NO.	PART NAME	ITEM NO.	PART NAME
1	BODY	6	BONNET BOLTING
2	BONNET	7	BONNET GASKET
3	WEDGE	8	PACKING
4	STEM	9	YOKE BUSHING
5	EXTENSION TUBE		

FIGURE C8.7 Extended stem gate valve. *(Courtesy Praxair, Inc.)*

Valves must be designed so that liquid cannot be trapped in a portion of it when the valves are cycled from open to closed. When a conventional gate valve is closed, it is possible for liquid to be trapped in the bonnet area. If liquid is trapped, heat input from the atmosphere will cause the liquid to vaporize and overpressurize the valve body. When a gate valve is used in cryogenic service, the bonnet area is vented to one side of the valve so that any vaporized gas cannot be trapped in the bonnet area. Figure C8.8 shows one method that is used to vent the bonnet area of a gate valve.

With a conventional ball valve, liquid can be trapped between the ball and the

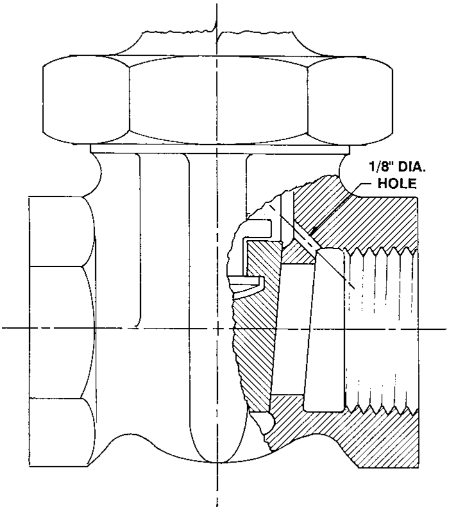

FIGURE C8.8 Gate valve—vented bonnet. *(Courtesy Praxair, Inc.)*

seat. Similarly, for ball valves in cryogenic service, the ball area is vented to one side of the valve.

During the cool-down or thaw of a cryogenic piping system, different parts of the valves may cool down or warm up at different rates, resulting in varying rates of contraction and expansion. The valve design must consider that the valves are required to be operational during these conditions.

FLEXIBILITY ANALYSIS AND SUPPORTS FOR CYROGENIC PIPING SYSTEMS

Piping flexibility analysis is an important design consideration because the large difference between ambient and cryogenic temperatures will result in significant thermal contraction. The analysis methods used are similar to those required for conventional piping systems as discussed in Chap. B4. The one difference is that piping in cryogenic service contracts rather than expands as is the case with high-temperature service. However, since the commercially available flexibility analysis computer programs have the temperature range as an input value, and the program calculates the resulting thermal contraction, the analysis methods become identical to those used for conventional piping systems.

When possible, cryogenic piping is routed so that the piping configuration provides adequate flexibility. Generally, piping is routed in a manner that includes Z, L, and U bend configurations to take up the pipe movement while keeping the stresses within the allowable range. When additional flexibility is required, the flexibility can be increased by the addition of expansion loops (U bends) or the addition of flexible metal hose. Flexible hose can accommodate larger pipe movements and can result in a more compact design. However, the use of flexible hoses may result in requiring more pipe supports to guide the piping so that the pipe movement is taken up by the hose.

The flexible hose is located so that pipe movement is lateral to it. The braided cover on the flexible hose prevents any significant pipe movement axial to the flexible hose. A flexible hose acts similarly to an expansion joint designed for lateral movements. The recommended upper pressure limit for flexible hose and expansion joints is 1000 psi (6900 kPa).

Hanging-style pipe supports can be used to accommodate significant pipe movement in both the lateral and axial directions. Roller-style pipe supports can be used to accommodate large axial pipe movement. When the amount of pipe movement exceeds the capability of a hanger or roller pipe support system, a fixed support located in the center of the pipe span can be effective in reducing the amount of movement.

When an uninsulated cryogenic line is supported, a portion of the pipe support will be at cryogenic temperature. The lower temperature should be considered when selecting the materials for the pipe support and its hardware.

INSTALLATION OF PIPING COMPONENTS

To minimize potential leaks, welding and brazing are the most common assembly methods for cryogenic piping systems. In accordance with the B31.3 Code, solder joints are not acceptable for cryogenic service. However, to allow removal of valves and other piping components for maintenance, other assembly methods are used at piping components.

Piping components with threaded fittings are used in small sizes, usually NPS 1½ pipe size and smaller. Flange joints are used for large sizes, with flanges provided in accordance with ASME B16.5. For raised-face and flat-face flanges, gaskets are usually compressed asbestos sheets, spiral-wound stainless steel with asbestos or Teflon filler, or flexible graphite such as Grafoil.

INSULATION SYSTEMS

Most piping in liquid cryogenic service is insulated. The only reasons a line would not be insulated are that (1) its use is very infrequent and brief; (2) it is a temporary installation; or (3) the refrigeration losses are inconsequential. The following table shows the heat leak from a frosted, uninsulated line containing liquid nitrogen and subjected to an 8 mi/h (3.6 m/sec) wind:

Pipe size (in)	Heat leak per foot of pipe (BTU/hr)	Pipe size (mm)	Heat leak per meter of pipe (Watt)
1	280	25	270
2	530	50	510
4	1000	100	960

The type of insulation used for cryogenic piping includes (1) expanded foams such as polyurethane and foamglass, (2) powder insulations such as perlite, and (3) vacuum-insulated pipe. For an insulation system to remain effective, the vapor barrier system must keep atmospheric moisture from entering the insulation space and freezing against the cryogenic line. When this occurs, the ice that is formed will degrade or destroy the insulation system.

When the cryogenic liquid is colder than the boiling point of oxygen (−297°F or −183°C), oxygen can condense out of the air and collect in the insulation space. For this situation, the insulation system should be noncombustible in the presence of oxygen.

TABLE C8.12 Thermal Conductivity of Pipe Insulation Materials at an Insulation Mean Temperature of −100°F

Insulation	Thermal conductivity [Btu/(h · ft · ² °F)]	Thermal conductivity W/(m · °K)
Urethane foam	0.012	.021
Foamglass	0.024	.042
Perlite (at atmospheric pressure)	0.018	.031
Perlite (vacuum at 1 μm)	7.9×10^{-4}	1.37×10^{-3}
Laminar radiation shielding (vacuum at 0.1 μm)	2.1×10^{-5}	3.63×10^{-5}

The typical values for thermal conductivity are shown in Table C8.12. The expanded foam insulations use a plastic covering, such as PVC or neoprene sheeting, to provide the vapor barrier protection. The initial capital cost is usually lower than the other systems, but more frequent maintenance is required to maintain a tight vapor barrier.

Powder insulation is generally used when several piping segments and pieces of equipment can be grouped in one area. A metal jacket or casing is used to contain the perlite around the piping and equipment. When the insulation space is maintained at atmospheric pressure, it must be purged with a dry gas, such as nitrogen, to keep atmospheric moisture out of the casing. For improved heat transfer performance, the casing can be made vacuum-tight and the insulation space evacuated to a high vacuum. For powder insulation, high vacuum is a pressure level less than 1 μm of mercury when the line is at the normal cryogenic temperature operation condition (1 μm of mercury is equal to 10^{-3} torr). See Table C8.12 for typical thermal conductivity values. When considering this insulation option, the difficulty in maintaining a vacuum-tight casing must be weighed against the difficulty of maintaining a dry gas purge, considering the difference in heat transfer performance.

Vacuum-insulated piping (VIP) is constructed of a stainless steel inner pipe that contains the cryogenic fluid, a stainless steel outer jacket to form the vacuum space, and insulation in the vacuum space. The insulation is normally laminar radiation shielding that consists of alternate layers of a reflective material, such as aluminum foil, and an insulation material, such as glass paper. For vacuum-insulated pipe, the required vacuum is a pressure level less than 0.1 μm, when the line is at the normal cryogenic operating condition. Heat leak by conduction and radiation is reduced by the laminar radiation shielding. The heat leak by convection is reduced by the vacuum.

Nonmetallic spacers are required in the vacuum space to support and maintain alignment of the inner pipe within the outer pipe jacket. Bellows are required in one pipe to account for the differential expansion between the inner and outer

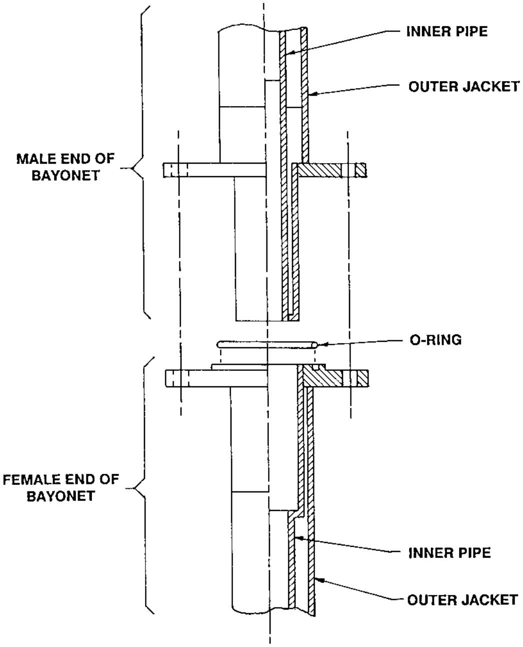
INNER PIPE
OUTER JACKET
MALE END OF BAYONET
O-RING
FEMALE END OF BAYONET
INNER PIPE
OUTER JACKET

FIGURE C8.9 Vacuum-insulated pipe bayonet assembly. *(Courtesy Praxair, Inc.)*

TABLE C8.13 Typical Heat Leak Values for Vacuum-Insulated Pipe when the Fluid Temperature is −320°F (−196°C)

Pipe size (in)†	Pipe	Elbow	Tee	Flex hose	Bayonet and field-welded joints	Valve
¾	0.47	1.50	2.00	1.41	15	14
1	0.50	2.30	3.40	1.50	21	15
1½	0.58	2.60	4.00	1.74	23	19
2	0.64	3.00	4.50	1.92	24	25
3	0.79	3.80	5.70	2.37	48	64
4	0.92	4.40	6.50	2.76	84	79
6	1.20	6.00	9.00	3.60	110	120
8	1.46	7.40	11.00	4.38	140	180

* (Heat leak values are BTU/h/ft of pipe and flex hose and are BTU/h for each fitting and valve.)

† For the inner pipe.

TABLE C8.13M (Metric) Typical Heat Leak Values for Vacuum-Insulated Pipe when the Fluid Temperature is −320°F (−196°C)*

Pipe Size (mm)†	Pipe	Elbow	Tee	Flex hose	Bayonet and field-welded joints	Valve
19	0.45	1.44	1.92	1.36	4	4
25	0.48	2.21	3.27	1.44	6	4
38	0.56	2.50	3.85	1.67	7	6
50	0.62	2.88	4.33	1.85	7	7
75	0.76	3.65	5.48	2.28	14	19
100	0.88	4.23	6.25	2.65	25	23
150	1.15	5.77	8.65	3.46	32	35
200	1.40	7.12	10.60	4.21	41	53

* (Heat leak values are watts/m of pipe and flex hose and are watts for each fitting and valve.)
† For the inner pipe.

pipe. Due to the labor-intensive nature of fabricating VIP, it is normally shop-fabricated. To accommodate field installation, a mechanical joint is required between pipe segments. A bayonet assembly is one type of joint that has an extended heat leak path between the inner pipe and the flange connection of the outer pipe. Figure C8.9 illustrates the bayonet assembly.

Table C8.12 shows typical values of insulation thermal performance for laminar radiation shielding. For a vacuum-insulated piping system, the thermal performance of the straight pipe is affected by the number and type of spacers. The thermal performance of fittings and other components depend on fabrication techniques. Tables C8.13 and Table C8.13M (Metric) show typical heat leak performance values for commercially available vacuum insulated pipe.

The total cost, including the piping system and the cost of refrigeration losses due to heat leak, should be considered when selecting an insulation system. For many permanent piping systems, vacuum-insulated pipe provides the most cost-effective insulation system.

CLEANING

All materials used in oxygen piping systems or connected with oxygen systems should be cleaned before the system is put into service. The cleaning must remove mill scale, rust, dirt, weld slag, oil, grease, and other organic materials. The purpose of the cleaning is to remove hazardous hydrocarbons and particulate contaminants which could ignite and cause a fire in an oxygen atmosphere. To obtain additional information on cleaning requirements, see Ref. 2. For a discussion of the factors affecting ignition in an oxygen system, see Ref. 3.

All materials used in nonoxygen cryogenic systems are also cleaned before the system is put in service. The purpose of the cleaning is to reduce contaminants to the point where they will not migrate, seize up moving parts at low temperatures, or prevent the attainment of high product purity or vacuum levels.

VENTS

When a cryogenic fluid is vented, such as from safety valves, safe disposal of the fluid must be considered. The fluid should be directed so that it will not contact personnel, because the low temperature can cause burns.

When cold, most cryogenic fluids are heavier than air. A heavier-than-air gas can displace the air and create a potential for asphyxiation. Some cryogenic fluids, such as hydrogen, are flammable. An oxygen-enriched atmosphere can promote flammability of other materials. Therefore, all vents should be located outdoors and directed so that high concentrations will not collect in confined areas.

REFERENCES

1. ASME B31.3, Process Piping, ASME Code for Pressure Piping, B31 An American National Standard, 1996 edition.
2. CGA Pamphlet G-4.1, *Cleaning Equipment for Oxygen Service,* Compressed Gas Association, Arlington, VA.
3. ASTM G88, Standard Guide for Designing Systems for Oxygen Service, American Society for Testing and Materials, Philadelphia, PA 1984.

COLD BOX PIPING

J. K. Howell

Cold Box Engineer

Praxair, Inc.

A *cold box* is a mechanical system that insulates an entire low-temperature process mechanical embodiment in a single assembly instead of insulating each pipe and vessel individually. The cold equipment and piping are installed in an airtight steel insulation casing. The void space inside the casing is filled with insulation powder or fibers.

The design of cold box piping requires knowledge of some basic engineering disciplines, such as strength of materials, fluid mechanics, and heat transfer. Also required are some piping design skills such as flexibility analysis, pressure drop calculations, and material selection. These skills are discussed in Chap. B4 of this handbook.

For safe design, cold box piping is usually designed to meet the engineering requirements of ASME B31.3[1], Process Piping Code. Further, the designer should be aware of the design considerations for safe operation and maintenance of cold boxes discussed in Sec. 8 of Ref. 2 of this article.

What follows is a description of problems unique to the design of cold box piping, and, where appropriate, suggested methods of solution.

DESIGN REQUIREMENTS FOR COLD BOX PIPING

General System Architecture

Cold boxes tend to be tall, vertical structures. They often contain tall distillation columns and brazed aluminum heat exchangers which are oriented for vertical flow (see Fig. C8.10). A minimum of 12 in (30 cm) of space is usually provided between the casing and the piping and equipment inside. This space provides adequate insulation for the cold equipment and access to the piping for fabrication, testing, and maintenance. Valves and controls above grade level are located so as to be easily accessible from operating platforms. The piping arrangement within the cold box is very compact to minimize the amount of insulation and to fit shop-fabricated cold boxes within the maximum outline which can be shipped by rail or by truck. Heat exchangers operating in parallel are located at the same elevation to avoid flow unbalance due to density differences between the warm and cold streams.

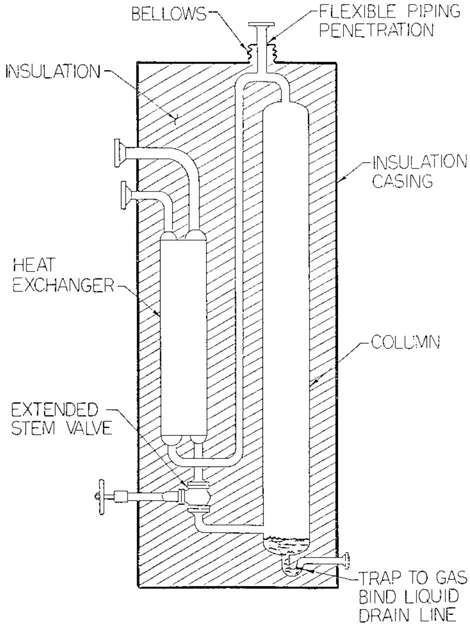

FIGURE C8.10 Schematic cold box diagram. *(Courtesy Praxair, Inc.)*

Insulation System

Before start-up, the insulation is purged with a dry inert gas, usually nitrogen. A small flow of purge gas is continued during operation to maintain a slight positive pressure in the casing and to prevent inflow of oxygen and moisture. Pipe and valve stem penetrations through the casing must be airtight.

Equipment and pipes operating at different temperatures must be separated to minimize unwanted heat flows. The piping and pipe supports must withstand loads from the insulation material. These loads occur when fibrous insulation is being packed into the casing and when powder insulation is being loaded or removed.

Reliability

Piping inside the cold box is not readily accessible for maintenance. Repair of a simple leak requires that the cold box be out of service for several days. Erosion caused by insulation and powder propelled by the leaking fluid can enlarge a small leak or cause another leak in nearby equipment. For these reasons, leak-tight integrity of cold box piping is extremely important. The number of flanged joints inside a cold box is kept to a minimum. Welded or brazed pipe joints are used wherever possible. Transition joints are often used to join stainless valves to aluminum pipe. Weld-end, top-entry, extended-stem globe valves afford maximum reliability. These valves do not have any flanges inside the casing, and the plug and seat can be replaced from outside the cold box. When flanges are used inside the casing, proper torquing of flange bolts must be assured. Threaded joints and tubing compression fittings are usually not used inside the casing. Flanges are sometimes installed in a separate, small, insulated compartment where access can be achieved without removing the insulation from the entire cold box. A careful leak test in done on all piping inside the casing before the insulation is installed.

Thermal Expansion and Contraction

Typically, cold box piping is heated to 212°F (100°C) before start-up to remove any moisture, and then cooled to operating temperature—as low as −320°F (−195°C), as is the case in an air separation plant. In that example, the total temperature range is 532°F (295°C). The total thermal expansion and contraction of aluminum pipe in this range is 6 in/100 ft (0.5 cm/m). The flexibility analysis of the piping must consider the full temperature range as well as any more severe differential temperature conditions which may occur during upset, thaw, or cool-down. Clearance must be allowed for the pipes to move through their full expansion and contraction range. This clearance is especially critical for pipes connected near the top of tall vessels. Pipe penetrations through the casing will restrict the movement of the pipe unless the casing is made flexible by use of a metal bellows or a rubber boot.

Piping Installation Details

Pipes running from liquid pipes or vessels to the casing must have thermal traps (upward rise of at least 2 pipe diameters) to gas-bind the connection and keep the cold liquid away from the warm casing. Thermal traps are also used in gas pipes to prevent unwanted convection currents.

Extended stem valves used in cold pipes are installed with the body located at least 12 in (30 cm) inside the casing and with the packing gland and the operator or handwheel located outside. Liquid valve stems are tilted upward at least 15° to gas-bind the stem extension tube and keep the liquid away from the packing.

Supports for cold pipes are commonly made from austinitic stainless steel because it is strong, ductile at cryogenic temperature, and has a relatively low thermal conductivity. Blocks of insulation material can be included in the supports to reduce heat leak from the casing.

Low-point drains are provided where necessary to remove process liquids for shutdown and to remove liquid water formed during thaw of the cold box.

Cleaning

Cold box piping is cleaned to remove contaminants (see the earlier discussion of cleaning in this chapter). The cleaning is usually done before the pipe is installed. Pipe ends and other openings are covered after completion of fabrication to maintain cleanliness.

DESIGN REQUIREMENTS FOR SPECIAL SITUATIONS

Reversing Exchangers

Reversing heat exchangers and regenerators are often used in air separation cold boxes. The piping in the reversing streams is subjected to cyclic pressure variations. Fatigue analysis should be performed on this piping. Paragraph K304.8 of Ref. 1 can be used as a guide for the fatigue analysis. Liquid water may be present in the warm-end piping from these heat exchangers. Possible corrosion and freeze-up problems should be considered in the design of this piping.

Liquid Oxygen Evaporation

Most liquid oxygen contains some traces of hydrocarbon contaminants. If this liquid vaporizes in a dead-ended pipe or crevice, the hydrocarbons will concentrate. Explosive mixtures can result. Crevices should be avoided in liquid oxygen piping where a source of heat is present. Drains and other dead-ended pipes connected to a liquid oxygen source should be trapped as close as possible to the liquid source. Liquid oxygen piping should be well-insulated from the casing and from warmer process equipment.

Vacuum-Insulated Cold Boxes

In some cold boxes, a vacuum is pumped on the insulation casing to reduce the heat leak. In such cases, the piping and vessels are tested with helium to find and repair tiny leaks which would greatly reduce the effectiveness of the vacuum insulation. The design pressure for such piping is based on the absolute rather than the gauge pressure.

Instrument Lines

Instrument pipes in the cold box must be designed with care. These pipes have a small diameter and are easily damaged. The design of instrument lines should provide adequate flexibility, support, and protection from insulation and/or inadvertent loads due to using these lines to support the weight of a worker during fabrication. Equation (16), paragraph 319.4.1 (c), Ref.1 can be used for assuring adequate flexibility of instrument lines.

Flammable Fluid

Some cold boxes process flammable fluids such as hydrogen, hydrocarbons, carbon monoxide, and so forth. Any aluminum or other low-melting-temperature piping outside the casing should be protected by fireproof insulation. The insulation should not contain any chemicals which would corrode or otherwise degrade the piping material. Discharges from the drains, vents, and relief valves must be piped to a flare stack or other safe means of disposal. Connections are provided on dead-ended pipes for purging air from the lines before admitting the flammable process fluids.

REFERENCES

1. ASME B31.3, ‘‘Process Piping,’’ An American National Standards, 1996 edition.
2. CGA Pamphlet C-8, ‘‘Safe Practices Guide for Air Separation Plants,’’ Compressed Gas Association, Arlington, VA, latest edition.

LIQUID STORAGE AND CONVERSION SYSTEMS

N. H. White
Engineering Associate
Praxair, Inc.

Bulk liquid storage systems are often used at or near the point of final consumption. They typically supply product in three basic forms: as a gas at less than the storage tank working pressure, as a gas at high pressure, and as a liquid. The equipment and piping required may vary, depending on which of these delivery forms is used. However, several general considerations apply to the piping design in all cases.

The working pressure of all lines in the system should be at least 10 percent higher than that of the tank. Relief valves required to protect the piping should be set at this pressure. This configuration of relief valve set points will ensure that if the tank is overpressured, it will be relieved in the gas phase from its safety valve and not in the liquid phase through one of the pipeline relief valves.

Vaporizers are commonly used in storage and conversion systems to gasify liquid product and bring it to ambient temperatures. The piping downstream of these units should be designed for liquid product temperature. This should continue up to the point where a safety device is installed to automatically shut off flow in the event that low temperature is sensed. The response time of this device must be compatible with the failure modes of the vaporization system used. The set point chosen must consider the design temperature of all components downstream.

Relief valves should be installed between any set of valves that can trap liquid or low-temperature gas if they are simultaneously closed. These *blocked-line relief valves* are required to relieve pressure buildup due to heat absorption. They should be set at the line working pressure and sized to relieve gas at conditions of maximum heat absorption. Particular attention should be paid to situations where the source of heat is natural convection associated with bare lines and ambient vaporizers. They are of special concern because even moderate winds can greatly increase the rate of heating and subsequent pressure buildup.

Bulk liquid units are typically employed in intermittent flow situations. For this reason, liquid lines will frequently have to be cooled down to liquid temperatures when product is demanded. Therefore, such lines should be sized to pass the required flow in the gaseous state to avoid excessive pressure drop at the start of demand. Design for cryogenic temperature requires that particular attention be paid to line flexibility. Although large displacements are involved due to the extreme temperature changes, they can be accommodated by conventional techniques, including flexible hose sections and expansion loops. In addition, most piping materials experience reduced impact strength at cryogenic temperatures. The materials section in this chapter deals in depth with this topic.

Thermal trapping is a piping technique that can be used in any liquid line, whether it is insulated or not, to minimize heat input to an idle piping section or branch. Where the branch is oriented vertically a gas-to-liquid interface will be established near the connection, and the majority of this section will be filled with gas approaching ambient temperature. This configuration greatly reduces heat input to the branch when it is idle.

LOW-PRESSURE BULK CONVERSION SYSTEMS

The most common bulk liquid units deliver gas at a pressure less than the storage tank working pressure. The working pressure of such systems is typically less than 250 psig (17.2 bar). However, systems with as high as 600 psig (41.4 bar) working pressure tankage have been used commercially. The delivery pressure must be limited to approximately 80 percent of the tank working pressure to allow for tolerance on the safety relief valve setting, and for buildup in product pressure during periods of nonuse. Figure C8.11 illustrates a typical piping configuration, and item numbers in the following discussion refer to this figure.

The lines connecting the vessel the to pressure relief safety devices (No. 301 and No. 302) are sized to meet the requirements of ASME Boiler and Pressure Vessel Code, Sec. VIII, Div. 1. Guidelines for the required calculations are given in the pamphlet CGA S-1.3 ‘‘Pressure Relief Device Standards—Part 3—Stationary Storage Containers for Compressed Gases,’’ published by the Compressed Gas Association. Normally both a relief valve and a burst disk are included. The relief valve is sized to handle the vapor generated due to the heat load resulting from the loss of insulation (loss of vacuum). The bursting disc is designed to handle the simultaneous loss of vacuum and fire conditions. Where it is critical that the system not be taken out of service for periodic inspection of the relief devices, it is common to use a dual set of safety devices with a diverter valve.

The fill system is arranged so that the tank can be filled from either the top or the bottom. Tank pressure is controlled during the fill operation by adjusting the

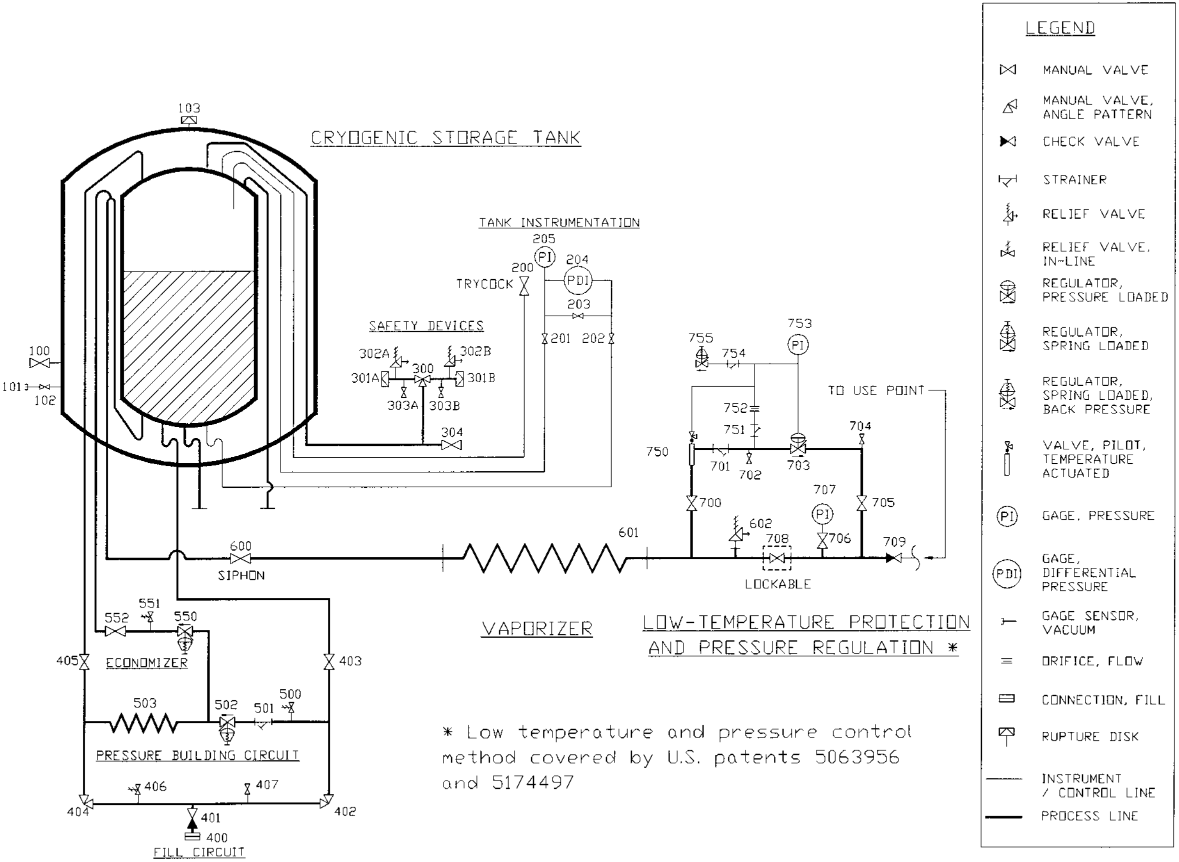
CRYOGENIC STORAGE TANK
103
TANK INSTRUMENTATION
205
PI
200
TRYCOCK
204
PDI
203
201
202
SAFETY DEVICES
302A
302B
300
301A
301B
303A
303B
304
100
101
102
755
754
753
PI
TO USE POINT
752
751
750
701
702
703
704
707
PI
700
705
602
708
706
709
601
600
SIPHON
LOCKABLE
VAPORIZER
LOW-TEMPERATURE PROTECTION
AND PRESSURE REGULATION *
552
551
550
ECONOMIZER
405
403
503
502
501
500
PRESSURE BUILDING CIRCUIT
406
407
404
401
402
400
FILL CIRCUIT
LEGEND
MANUAL VALVE
MANUAL VALVE, ANGLE PATTERN
CHECK VALVE
STRAINER
RELIEF VALVE
RELIEF VALVE, IN-LINE
REGULATOR, PRESSURE LOADED
REGULATOR, SPRING LOADED
REGULATOR, SPRING LOADED, BACK PRESSURE
VALVE, PILOT, TEMPERATURE ACTUATED
PI GAGE, PRESSURE
PDI GAGE, DIFFERENTIAL PRESSURE
GAGE SENSOR, VACUUM
ORIFICE, FLOW
CONNECTION, FILL
RUPTURE DISK
INSTRUMENT / CONTROL LINE
PROCESS LINE

* Low temperature and pressure control method covered by U.S. patents 5063956 and 5174497

FIGURE C8.11 Low-pressure bulk conversion system *(Courtesy of Praxair, Inc.)*

portion of refill liquid entering from the top relative to that entering from the bottom with valves No. 402 and No. 404. Filling from the top reduces tank pressure by condensing the vapor in the gas space of the storage tank. Filling from the bottom increases tank pressure because the liquid acts as a piston, compressing the gas space. Special piping considerations for the fill lines involve the line size, which should be adequate to permit refill to occur in a reasonable time period and yet not be oversized to limit heat input. Insulation is not typically used on these lines because of their short length, intermittent use, and high transfer rate. Helium and hydrogen fill operations are an exception to this practice because of their extremely low temperature and low heat of vaporization. Other products may justify the use of insulation based on their value.

Bulk tanks are normally filled from transports, which are discussed in the mobile equipment section of this chapter. The transfer is driven either by a centrifugal pump or by pressurizing the supply vessel. The centrifugal pumps are typically one- or two-stage designs matched for the discharge rate and pressure by adjusting the speed and impeller cut as in conventional service. The system—including the transport piping, the off-loading pump or pressurization circuit, the tank fill piping, and the tank pressure relief circuit—must be analyzed to ensure that the tank cannot be overpressurized in the refill process. Compressed Gas Association position paper PS-8, ‘‘Protection of Storage Tanks From Over-pressure during Operator Attended Refill,’’ addresses this topic.

The tank instrument piping includes a gas phase line called the *full trycock* that extends into the gas space to the full liquid level. This line is used by the operator during manual-fill operations to determine when the tank is full. The operator opens valve No. 200 when the fill is nearly complete and observes when liquid is discharged, which indicates the full level has been reached. Also included in the instrument piping is a liquid- and gas-phase line used to measure contents and pressure.

Control of pressure between refills is accomplished by the combined actions of the pressure building, economizer, and pressure-relief systems. The pressure-building circuit consists of components Nos. 500 through 503 and is driven by the difference in densities of the liquid and gas phases. It functions when product flows from the liquid-phase line, is vaporized in the pressure-building vaporizer No. 503, and returns to the gas space. This system is required when the demand for product at the use point is sufficient to cause the tank pressure to fall. Attention must be paid to the very low driving pressure in this circuit.

Product is normally delivered to the use point from the tank in liquid phase. In the case of low or intermittent demand, the product vapor pressure can increase above the delivery pressure. At this point pressure-building is no longer necessary, and it is desirable to withdraw product from the tank in gas phase. Product delivered in the gas phase will remove approximately five times the heat from the tank as the same mass withdrawn in liquid phase. A scheme to automatically switch to gas phase supply at high tank pressure is called an *economizer*. A siphon cycle economizer is illustrated in items Nos. 550 through 552, together with the siphon line inside the tank. When tank pressure is high, regulator No. 502 is closed and back-pressure valve No. 550 is open. The siphon is broken in this way, and gaseous product is withdrawn through valve No. 600. The siphon is reestablished at reduced tank pressure when the positions of valves Nos. 502 and 550 are reversed. There are alternative economizer designs, and care must be taken in selecting one because most are limited to low instantaneous flows.

The product is next vaporized and superheated in the vaporizer No. 601. Vaporizers are classified as *ambient* where the required heat is derived from the atmosphere, or as *powered* where the heat is supplied from another source such as steam, electricity, or hot water. Relief valve No. 602 provides protection in the event of a blocked line condition, and special attention should be paid to the vaporizer power source in selecting this valve.

A low-temperature pipeline protection device is normally included downstream of the vaporizer to automatically shut down flow in the event of vaporizer failure. This shutdown device is the transition point between cryogenic and noncryogenic pipe design. In addition, a pipeline regulator is usually used to provide constant pressure in the pipeline. The low-temperature protection and pressure regulation module given as components Nos. 700 through 755 has emerged as the preferred way of providing these functions. Regulator No. 703 is pressure-loaded so that discharge pressure is approximately equal to the loading pressure as read on gauge No. 753. Temperature pilot No. 750 opens and reduces the loading pressure when gas temperature falls into the set control range, until No. 703 is completely closed.

HIGH-PRESSURE BULK CONVERSION SYSTEMS

In some applications, gas is required at greater than the working pressure of the tank. In such cases, it is pumped in the liquid state, vaporized, superheated to ambient temperature, and regulated to the required pipeline pressure. A bank of high-pressure receivers is usually included to match the demand to the pump discharge rate. The pump is typically a reciprocating single-acting design ranging in configuration from simplex to triplex. Figure C8.12 gives a typical flow diagram of a high-pressure conversion system employing a standard cryogenic storage tank. Item numbers referred to in the following discussion are given in this figure. Piping practice for much of the system remains unchanged from the low-pressure gas system just discussed. However, special considerations must be made for the piping both upstream and downstream of the pump to ensure proper system operation.

The fluid at the suction flange must be subcooled in order to meet the net positive suction head (NPSH) requirements. The degree of subcooling required ranges from 2 to 10 psi, depending on pump design, condition, and discharge requirements. The liquid at the bottom of the storage tank is normally subcooled by approximately the static head of the liquid phase above it. The suction piping must minimize both heat input and pressure drop to preserve the available subcooling. Pressure losses are primarily due to the fluid acceleration required by the reciprocating pump and may be calculated using classical analysis. Heat input generally increases with pipe diameter, but may be essentially eliminated by the use of high-performance insulation. Insulation should always be used where the tank working pressure is low, the demand is intermittent, or the pump discharge rate is low. It is used almost universally in hydrogen pumping systems.

The pump is usually contained in a small vacuum-insulated sump, which is connected to the storage tank gas and liquid phases. As the first step in priming the pump, components Nos. 800 through 807 are used to fill the sump with liquid. The product vaporized in cooling these components is returned to the tank gas phase, increasing system pressure and thereby available subcooling. The second step is to run the pump with valve No. 827 open, which circulates liquid through the pump and discharges it to the tank gas phase, cooling the pump compression chamber. Finally, valve No. 827 is closed, forcing the pump to discharge against receiver pressure which is being held by check valves No. 830. Temperature sensor No. 831 is used to check for pump prime.

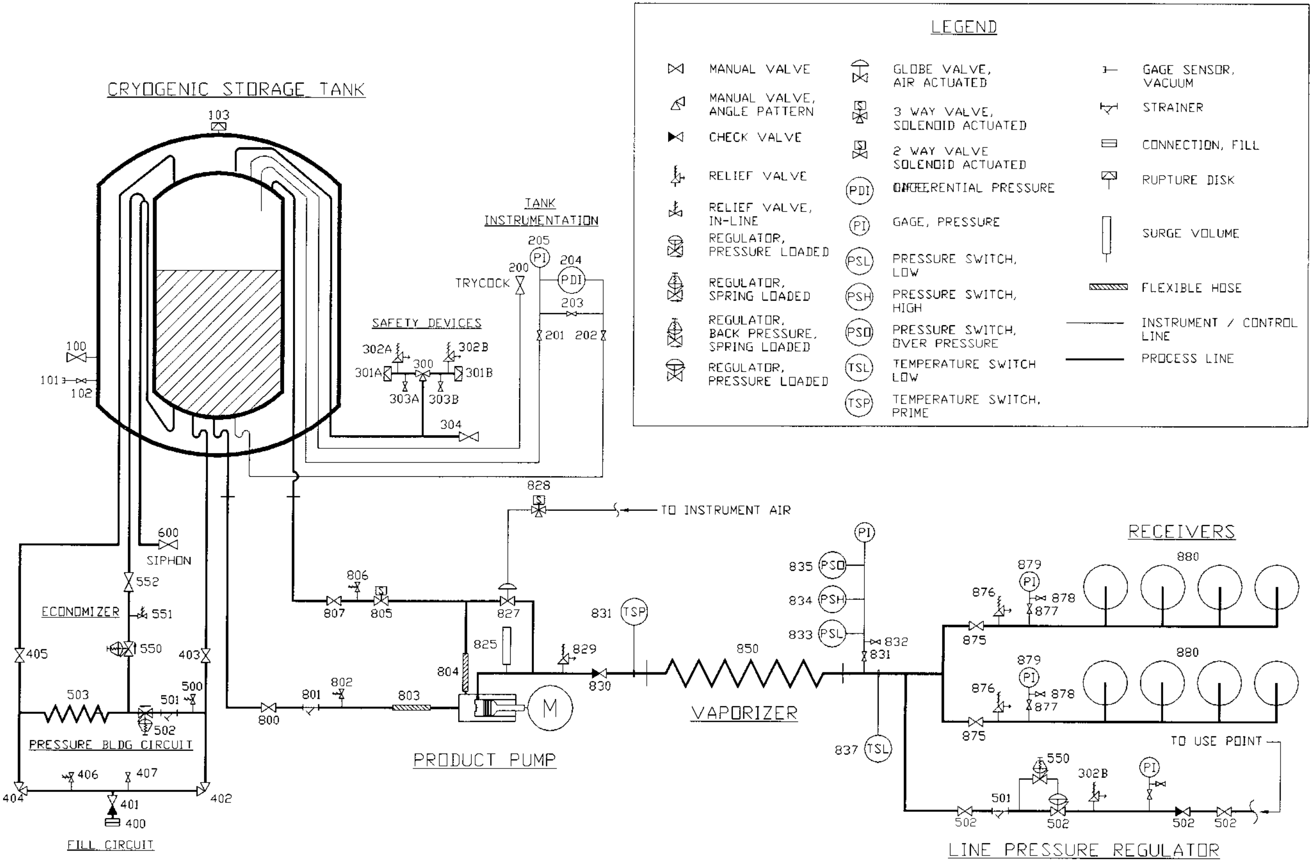
CRYOGENIC STORAGE TANK
103
100
101
102
TANK INSTRUMENTATION
205
PI
200
TRYCOCK
204
PDI
203
201
202
SAFETY DEVICES
302A
302B
301A
300
301B
303A
303B
304
600
SIPHON
552
ECONOMIZER
551
550
405
403
503
501
500
502
PRESSURE BLDG CIRCUIT
404
406
407
402
401
400
FILL CIRCUIT
828
TO INSTRUMENT AIR
806
807
805
827
825
804
829
830
800
801
802
803
M
PRODUCT PUMP
831
TSP
850
VAPORIZER
835 PSO
834 PSH
833 PSL
PI
832
831
837 TSL
RECEIVERS
879
880
876
878
877
875
TO USE POINT
550
302B
501
502
LINE PRESSURE REGULATOR
LEGEND
MANUAL VALVE
MANUAL VALVE, ANGLE PATTERN
CHECK VALVE
RELIEF VALVE
RELIEF VALVE, IN-LINE
REGULATOR, PRESSURE LOADED
REGULATOR, SPRING LOADED
REGULATOR, BACK PRESSURE, SPRING LOADED
REGULATOR, PRESSURE LOADED
GLOBE VALVE, AIR ACTUATED
3 WAY VALVE, SOLENOID ACTUATED
2 WAY VALVE SOLENOID ACTUATED
PDI DIFFERENTIAL PRESSURE
PI GAGE, PRESSURE
PSL PRESSURE SWITCH, LOW
PSH PRESSURE SWITCH, HIGH
PSO PRESSURE SWITCH, OVER PRESSURE
TSL TEMPERATURE SWITCH LOW
TSP TEMPERATURE SWITCH, PRIME
GAGE SENSOR, VACUUM
STRAINER
CONNECTION, FILL
RUPTURE DISK
SURGE VOLUME
FLEXIBLE HOSE
INSTRUMENT / CONTROL LINE
PROCESS LINE

FIGURE C8.12 High-pressure bulk conversion system. *(Courtesy of Praxair, Inc.)*

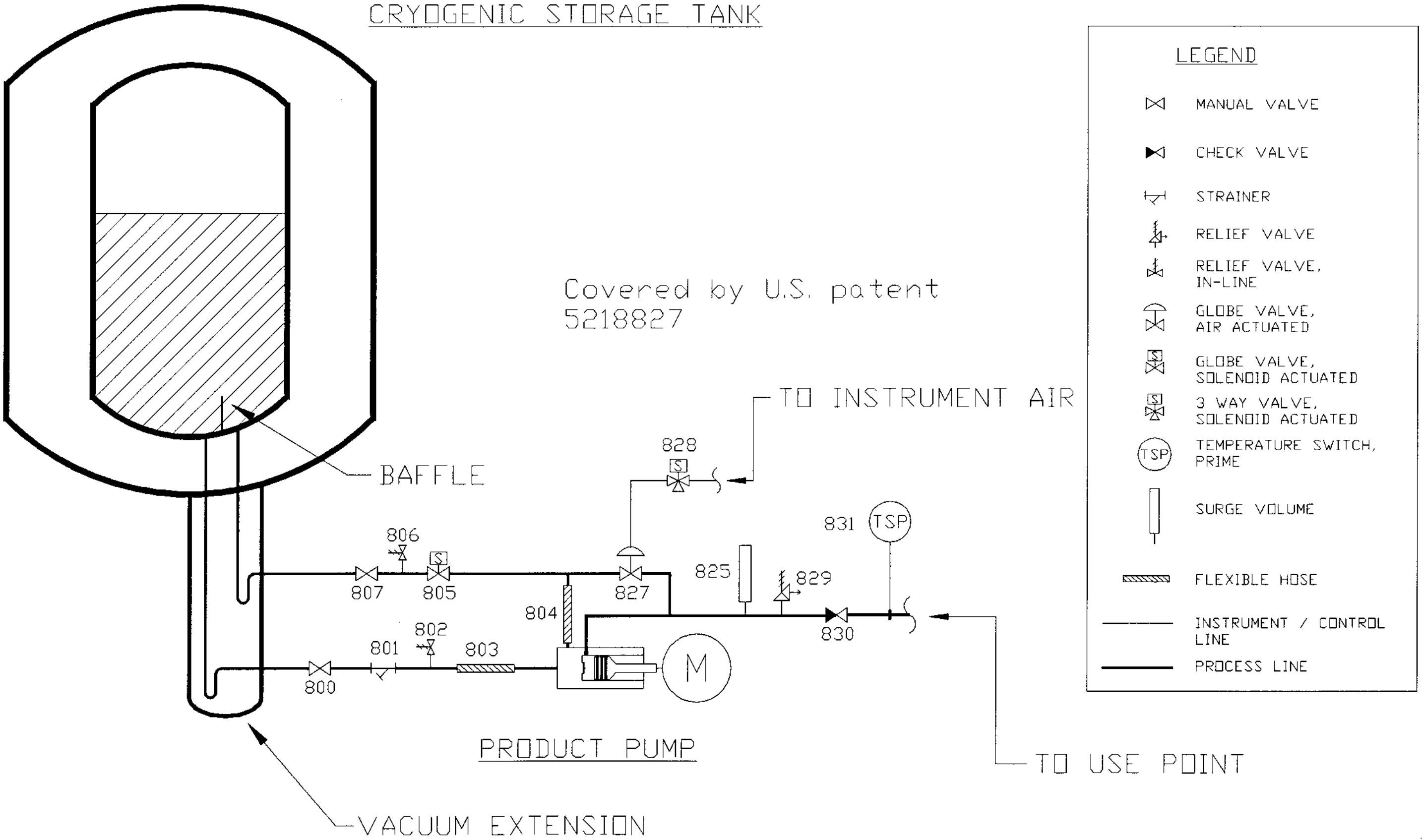
CRYOGENIC STORAGE TANK
Covered by U.S. patent 5218827
BAFFLE
VACUUM EXTENSION
PRODUCT PUMP
M
TO INSTRUMENT AIR
TO USE POINT
828
806
805
807
827
804
802
801
803
800
825
829
830
831
TSP
LEGEND
MANUAL VALVE
CHECK VALVE
STRAINER
RELIEF VALVE
RELIEF VALVE, IN-LINE
GLOBE VALVE, AIR ACTUATED
GLOBE VALVE, SOLENOID ACTUATED
3 WAY VALVE, SOLENOID ACTUATED
TEMPERATURE SWITCH, PRIME
SURGE VOLUME
FLEXIBLE HOSE
INSTRUMENT / CONTROL LINE
PROCESS LINE

FIGURE C8.13 Thermosiphon prime system for cryogenic pumps. *(Courtesy of Praxair, Inc.)*

The piping downstream of the pump must be designed for cryogenic temperatures and high pressures as well as the pulsations and vibration generated by the reciprocating pump. Temperature switch No. 837 is used to shut the pump off in the event of low pipeline temperature. Although noncryogenic materials may be used downstream of this sensor, it is common practice to use cryogenic materials for all high-pressure piping in the bulk delivery system.

Priming with this conventional piping arrangement works well while the liquid level in the tank is high. In this case a circulation flow develops, with fluid gaining heat in the path through the suction line, the pump sump, and the return line, which reduces its density. The lightened liquid flows up the return line and dumps into the tank. This circulation is driven by the difference between the static head due to the tank gas and liquid phase contents and that due to the less dense liquid in the return line. When the depth of the liquid contents is nearly equal to the height of the tank, this circulation flow quickly cools the pump and presents subcooled liquid at the suction valve to enable a good pump prime. However, circulation flow is reduced at lower tank levels because the static head of the tank contents is less, and priming becomes impossible. Figure C8.13 gives an improved arrangement in which both the suction and return lines are connected to the tank liquid phase through an extension of the vacuum jacket. The two penetrations are separated by a short baffle to promote convection within the tank liquid phase. The difference in height between the traps within the extension provides the head needed to start the circulation flow. The heat picked up in traveling to and from the pump sump reduces the density of the returned liquid, which maintains the circulation once started. This configuration allows priming to occur regardless of the tank level.

BULK LIQUID DELIVERY SYSTEMS

Where liquid-phase product is required at the use point, refrigeration rather than the fluid itself is usually of interest. Therefore, minimizing heat addition through the tank and piping is the primary design consideration in these systems. Some degree of pipe insulation can almost always be justified. The tank insulation performance is also critical to satisfactory system operation.

Ideally, the tank should be elevated so that the entire pressure requirement can be provided by the static head of the tank contents. This eliminates the need for pressure building in the storage tank, which can easily represent several times the heat load from all other sources. A horizontal tank is preferred to a vertical tank, in this case, both because the elevated foundation is less expensive and because the variation in static head, as the contents are withdrawn, is reduced. Where pressure building is required and the tank will not be elevated, a vertical tank is preferred to minimize heat transfer through the gas to liquid interface area of the vessel.

In spite of the efforts, the fluid normally arrives at the use point with at least a small gas component. Normally, conditioning by a subcooler, phase separator, or similar equipment is required to achieve satisfactory process control. This hardware is located at the application and at a minimum delivers saturated liquid by venting the gas that is generated in the piping system.

Figure C8.14 illustrates a self-contained system that delivers subcooled fluid. It consists a of heat exchanger formed by a tube within a tube, called an *in-line subcooler* because it replaces a section of the supply line. It is arranged so that the

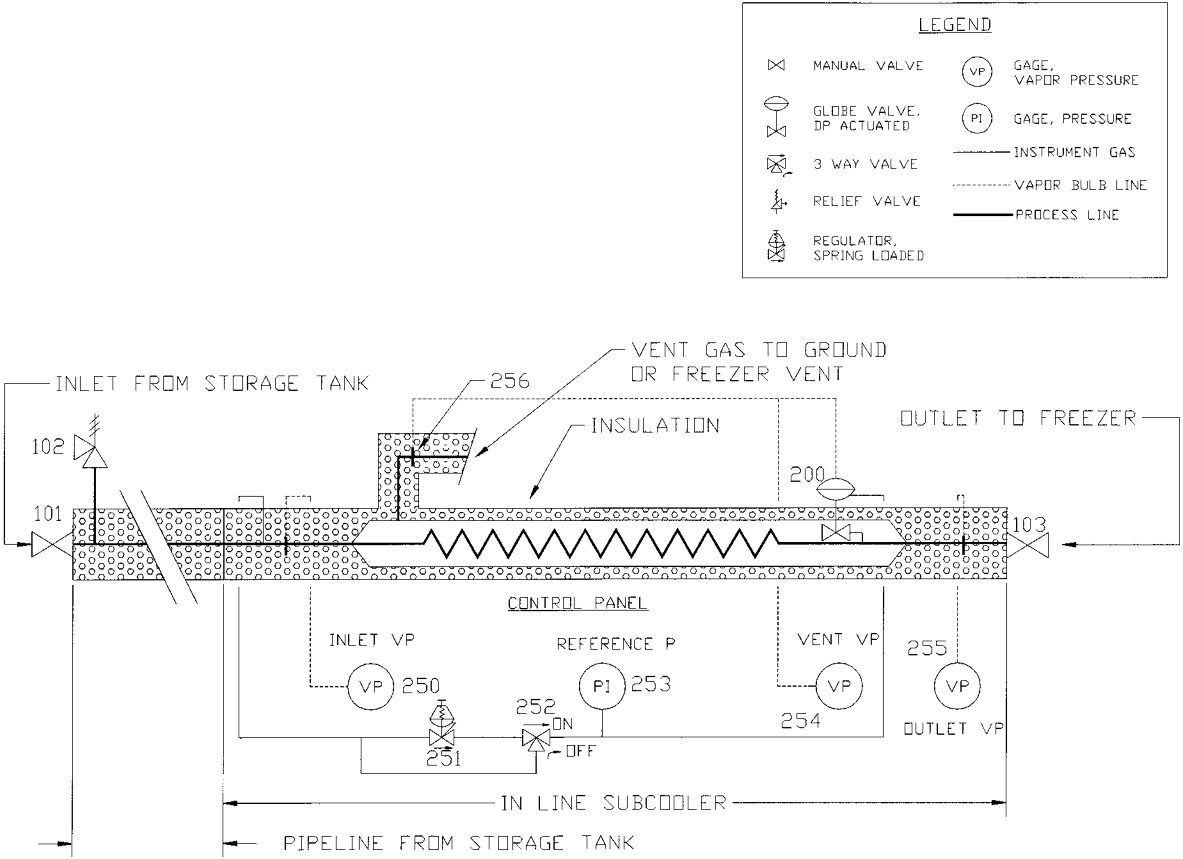
LEGEND
MANUAL VALVE
GLOBE VALVE, DP ACTUATED
3 WAY VALVE
RELIEF VALVE
REGULATOR, SPRING LOADED
VP
GAGE, VAPOR PRESSURE
PI
GAGE, PRESSURE
INSTRUMENT GAS
VAPOR BULB LINE
PROCESS LINE
INLET FROM STORAGE TANK
256
VENT GAS TO GROUND OR FREEZER VENT
INSULATION
OUTLET TO FREEZER
102
101
200
103
CONTROL PANEL
INLET VP
VP
250
REFERENCE P
PI
253
VENT VP
VP
254
255
VP
OUTLET VP
252
ON
OFF
251
IN LINE SUBCOOLER
PIPELINE FROM STORAGE TANK

FIGURE C8.14 Inline cryogenic subcooler. Courtesy of Praxair Inc. (*Covered by U.S. Patent No. 5477691.*)

main product stream flows through the inner tube, and control valve No. 200, located at the discharge end, emits a small portion into the annular space. This control valve is actuated by the difference between the vapor pressure of bulb No. 256, located in the vent, and the reference pressure set by regulator No. 251. When the vapor pressure of the vent fluid rises above the reference pressure, the control valve opens. The reference pressure is selected to ensure that cold gas—but not liquid—is emerging from the vent. The temperature of the liquid in the annular space is reduced, since the pressure is maintained at a near-atmospheric level. Liquid flowing through the inner tube is cooled by the annular stream.

MOBILE EQUIPMENT SYSTEM

R. C. Cipolla
Consultant
Trucking Operations
Praxair, Inc.

Bulk atmospheric gases, oxygen, nitrogen, and argon are transported as liquids in various styles of double-walled tank trucks. This section presents the most common semitrailer-style transport vehicles used for the distribution of atmospheric gases.

A doubled-walled cylindrical tank truck has a product tank, or inner pressure vessel, enclosed in an outer casing or jacket. The inner pressure vessel is designed, manufactured and tested to meet requirements of Sec. VIII of the ASME Boiler and Pressure Vessel Code. The casing or jacket is designed to the requirements of CGA-341, Standard for Insulated Cargo Tank Specification for Cryogenic Liquid, Compressed Gas Association. The annular space between the inner pressure vessel and casing is insulated and evacuated in order to minimize the amount of heat leak from the casing shell to the cryogenic liquid. Heat transferred to the product will result in a pressure rise, with the eventual release of product. The inner pressure vessel is normally supported or attached to the casing at or near the inner pressure vessel heads. The upper coupler king pin, landing gear support legs, and tandem axle assembly for the cryogenic semitrailer are standard automotive components available to the trucking industry.

Atmospheric gases are typically transported in low-pressure semitrailers equipped with an on-board pumping system used for off-loading the product to a customer storage tank. This pumper-style semitrailer allows for a maximum payload at a gross combination weight limit of 80,000 lbs (36,300 kg)—the road limit for a five-axle tractor-trailer combination. Inner pressure vessels are rated for a maximum allowable working pressure of from 40 to 60 psia (276 to 414 kPa) and constructed from AISI type 304 stainless steel or AA-5083 aluminum alloy (ASTM B-209). Casings are constructed from either carbon steel or aluminum alloys. Carbon steel casings are used along with stainless inner pressure vessels, and aluminum casings are matched to aluminum inner pressure vessels. A lightweight casing design can be achieved by providing closely spaced circumferential ring stiffeners. These ribs reinforce the cylindrical casing section against the external pressure load which results from the evacuation of the insulation or annular space.

Atmospheric gases have different product densities, which will in turn result in different-sized product-optimized semitrailers. When optimized for an 80,000 lb [36,300 kg] road limit, a nitrogen-sized semitrailer has a volume of about 8000 gal (30.3 m^3); an oxygen semitrailer about 6000 gal (22.7 m^3); and an argon semitrailer about 4500 gal (17.1 m^3).

Liquid oxygen, nitrogen, and argon are exempt from the U.S. Department of Transportation (DOT) hazardous material regulations for design requirements of the semitrailer or package when the product pressure is maintained at less than 40 psia [276 kPa] during transportation. However, DOT markings and shipping preparation, along with regulations pertaining to the trucking components such as braking and lighting systems, are all considerations when designing a cryogenic transport. Basic requirements for vessels, structural supports, structural protection, and external piping are covered by CGA-341 specifications.

Piping systems for cryogenic transports can be separated into two categories: *internal piping,* which includes piping internal to the inner pressure vessel as well as annular space piping; and *external piping,* which includes all piping exterior to the casing envelope. Both internal and external piping systems are normally fabricated with butt-welded joints.

INTERNAL PIPING

An internal piping system is constructed from stainless steel for stainless inner pressure vessels and of aluminum for aluminum inner pressure vessels. A typical internal piping arrangement has the piping penetrating the vessel walls through the rear casing head, as compared to a location on the cylindrical portion of the vessel. (See Fig. C8.15 for a typical piping schematic.) Piping sections inside the inner pressure vessel are not subject to an internal pressure loading. Design

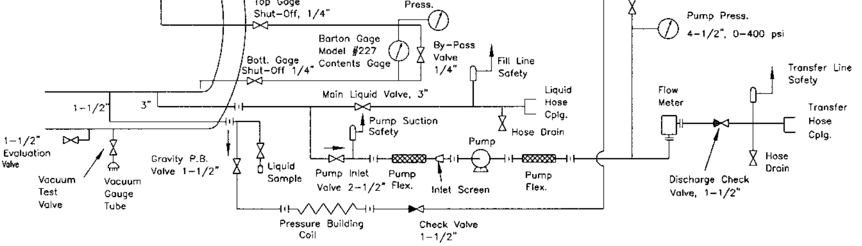
Vent
Road Relief Valve
1/2" Back Pressure
Regulator, Set 15 psi
To Vent Stack
To Vent Stack
Valve, 1-1/2"
Casing Safety
80,000 LBS.
Trycock
Road Relief
Shut-Off 1/2"
Container
Safety
Valve
Container
Bursting
Disk
Gas Line
Safety
1/4"
Gas Return
Valve 1-1/2"
Gas Phase
Hose Cplg.
3"
2"
4-1/2" Tank
Press.
Top Gage
Shut-Off, 1/4"
Pump Press.
4-1/2", 0-400 psi
Barton Gage
Model #227
Contents Gage
By-Pass
Valve
1/4"
Fill Line
Safety
Bott. Gage
Shut-Off 1/4"
Transfer Line
Safety
Liquid
Hose
Cplg.
Flow
Meter
Main Liquid Valve, 3"
Transfer
Hose
Cplg.
1-1/2"
3"
Pump Suction
Safety
Hose Drain
1-1/2"
Evaluation
Valve
Pump
Gravity P.B.
Valve 1-1/2"
Liquid
Sample
Pump Inlet
Valve 2-1/2"
Pump
Flex.
Inlet Screen
Pump
Flex.
Hose
Drain
Vacuum
Test
Valve
Vacuum
Gauge
Tube
Discharge Check
Valve, 1-1/2"
Pressure Building
Coil
Check Valve
1-1/2"

FIGURE C8.15 Schematic of typical internal piping arrangement.

considerations for piping supports and attachments include loadings imposed by road vibration and thermal contraction due to temperature as low as −320.4°F (−195.8°C).

Annular space piping configurations must have consideration given to heat leakage, flexibility, and trapping of liquid or gas. Since heat leakage to the cryogenic liquid is primarily by conduction down the pipe wall, the length of the piping run is of importance. Stresses induced by thermal contraction of the line or movement of the inner pressure vessel relative to the casing are typically accommodated by providing adequate piping flexibility in the form of loops and bends. Stress levels due to flexibility are generally kept to within the allowable limits imposed by ASME B31.3, Process Piping. Piping bellows to accommodate thermal displacements are not generally considered an acceptable way of providing flexibility to annular space piping. Road vibrations have proven to be detrimental to bellows-style fittings.

Testing of internal piping systems includes pressure, leak, and other examinations when required by codes. Pressure-testing procedures follow ASME B31.3 requirements. Nozzle penetrations at the inner pressure vessel wall may require examination of the welded joint using dye-penetrant techniques. Annular space piping is thoroughly leak tested, since any leaks would deteriorate the vacuum condition within the insulation space. A helium mass spectrometer technique is the most common method used for vessel and piping leak testing.

EXTERNAL PIPING

The external piping system is commonly located inside an operating compartment at the rear of the semitrailer; however, the pressure-building coil is located under the semitrailer forward of the tandem axle assembly. The rear grouping has accident protection features provided by the tandem axle subframe, rear bumper, and the piping compartment.

Stainless steel external piping systems are used on all transports regardless of inner vessel construction, with the exception of the pressure-building coil. The coil is normally constructed of aluminum extruded-fin tubing, which is flanged to stainless steel inlet and outlet piping. The function of the coil will be discussed later. Valves, gauges, and other instruments and controls are not necessarily constructed from stainless steel materials. Bronzes, copper alloys, and aluminum alloys are used for various component parts. Internal and external piping runs are joined at the casing penetrations with piping flanges. For aluminum vessel designs these flanges provide a simple way of connecting aluminum internal lines to stainless steel external lines.

As Fig. C8.15 schematically illustrates, cryogenic semitrailers typically have two liquid phase lines. The first piping run is used to fill the trailer at the production plant and to unload the trailer using the off-loading pump. The second liquid line is used for the pressure-building system. Pressure in the inner pressure vessel can be increased by vaporizing a small amount of liquid. The coil with a large heat transfer surface can readily vaporize liquid and return the warmed gas to the ullage space of the trailer. This pressure buildup is performed prior to and during the off-loading process in order to maintain adequate suction pressure for the centrifugal transfer pump.

Gas-phase piping includes a pressure-relief device line which directly communicates with the vapor or gas space near the midpoint of the top centerline. A spring-loaded pressure relief valve and a rupture disk device are normally provided on the cryogenic semitrailer. These relief devices are designed to maintain pressure at a safe level under emergency conditions, including exposure of the vessel to a fire. Pressure-relief devices are designed to the requirements of Section VIII of the ASME Boiler & Pressure Code as well as CGA pamphlet S1.2, ''Pressure Relief Device Standards—Cargo and Portable Tanks for Compressed Gases.'' The same piping run is also used to provide for a manual vent system and a *road relief* circuit. The road relief valve, typically set at about 30 psia (207 kPa), controls the inner vessel pressure during transportation. Venting of product when the pressure reaches the road relief valve setting can occur. A shutoff valve upstream of the road relief allows isolation during off-loading and, therefore, permits the buildup of pressure to an operating level near the working pressure of the inner pressure vessel.

A second gas-phase circuit has multiple uses as a gas-phase outlet, pressure-building coil return, and a transfer pump recirculation line.

An optional sparger, or gas-phase fill header, has various uses. A typical design has a pipe running along the top of the inner vessel with a series of holes which act as spray nozzles for the liquid. With this line teed from the main fill line, transfer of liquid to the trailer can occur in an all-liquid phase, all-gas phase, or any combination. Gas-phase filling of an empty trailer through the sparger will cause a partial collapse of the gas pressure. This pressure reduction by collapse eliminates product losses that would occur by manually venting the pressure from the vessel. A sparger also provides a means of uniformly cooling down or shrinking a warm inner pressure vessel. Uneven shrinking of a inner vessel from near ambient to liquid temperatures can cause serious structural damage to the vessel, supports, or piping.

Inner vessel pressure, transfer pump discharge pressure, and liquid contents are monitored with trailer-mounted gauges. A differential pressure indicator is the most common device used for contents measurement. Liquid and gas taps are provided for this gauge.

Sampling of product in the inner pressure vessel is necessary in order to determine the level of product purity. A liquid tap typically teed externally to a liquid line can be used for sampling.

The liquid fill level can be detected by a small-diameter fixed-length dip tube. Flow of liquid through the line indicates the liquid level in the tank. If the semitrailer is used to transport various cryogenic liquids, dip tubes positioned at different levels would be provided.

As previously stated, the annular space is evacuated. Pressure levels below 0.04 in (1×10^{-4} meter) of mercury are achieved by pumping down the space through a line equipped with a shutoff valve. A filter on this pipe eliminates problems with the insulation material being carried to the valve or pump. The vacuum level can be monitored using the trailer-equipped thermocouple gauge tube. Vacuum level is determined by a portable vacuum meter.

Cryogenic piping must be protected from overpressurization in any piping section which can be isolated. After liquid or gas has been transferred, the cold product warms up and builds pressure which can exceed the bursting pressure of the pipe or fittings. For this reason, *block line safety devices* are a mandatory feature in cryogenic piping circuits.

Thermal contraction of external pipes can cause high forces when constrained. Typically, centrifugal transfer pumps and meter systems are protected from these forces by expansion bellows in the inlet and discharge piping. Piping bellows are made from corrugated stainless steel hose.

ULTRA-HIGH-PURITY PIPING

Raymond Dale Woodward
Manager
Praxair Semiconductor Materials
Praxair, Inc.

Ultra-high-purity (UHP) piping systems are found in gas and liquid supply systems used in the fabrication of electronic semiconductor chips and other related devices. The requirements for purity in UHP systems typically involve contamination levels of less than 1 part per billion (ppb) of foreign materials.

Semiconductor fabrication involves forming alternate layers of very fine lines of semiconducting material on the surface of nonconducting material such as silicon. The lines form miniature ultra-large-scale-integrated (ULSI) electronic circuits on a small silicon chip. Many small chips are simultaneously fabricated on a single silicon wafer. The line or feature size of ULSI chips approaches 5 μin (0.13 μm) or less. Any particle one-tenth of the line size can cause a defect in the circuit, resulting in chip destruction. To keep the percentage output yield of defect-free chips high, the gases and liquids used in the fabrication of ULSI circuits must be very pure and free of particulate contamination.

The present requirements for gas purity are that trace gas contamination must be held to the parts-per-trillion (ppt) level. For particulates, contamination with particles greater than about one-tenth the semiconductor feature size must be held to less than 5 particles/ft^3 (190 particles/m^3) of gas.

GENERAL GAS SUPPLY SYSTEM DESCRIPTION

Semiconductor manufacturers require UHP gases at the point of use inside their facilities (fabs). In most industries, a gas supplier is only required to supply gas to some interface point near the customer's plant boundary. However, for ultraclean systems, the gas supplier is typically required to provide UHP gas to the final point of use. This means that the gas supplier is responsible for the UHP piping system within the customer's fab, in addition to the gas storage and conditioning system at the fab boundary. This ensures that the gas meets the customer's requirements at the point of use.

Gas supply systems can range from single small cylinders to large air separation plants. The specialty gas requirements can usually be met with high-pressure gas cylinders, although bulk specialty gas supply systems are becoming increasingly more common. Bulk gas supply requirements are usually met by a combination of on-site production facilities and liquid storage pad packages. However, regardless of the gas supply system size or complexity, it must be able to reliably supply gases in UHP condition to the customer.

Typical facilities require most, if not all, of the supply systems described above. High-volume consumption gases such as nitrogen and clean dry air (CDA) are usually supplied from an on-site plant. A typical on-site system may consist of air

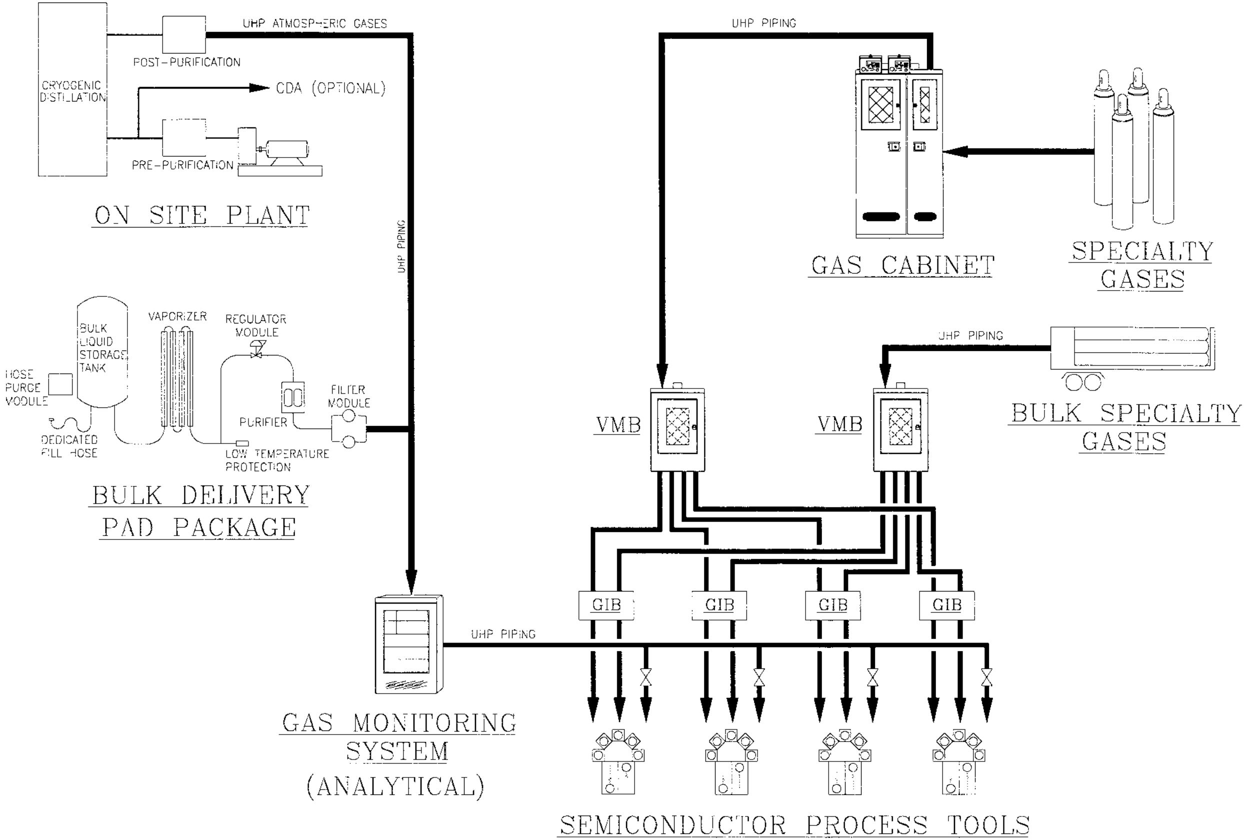
UHP ATMOSPHERIC GASES
CRYOGENIC DISTILLATION
POST-PURIFICATION
CDA (OPTIONAL)
PRE-PURIFICATION
ON SITE PLANT
UHP PIPING
UHP PIPING
GAS CABINET
SPECIALTY GASES
BULK LIQUID STORAGE TANK
VAPORIZER
REGULATOR MODULE
HOSE PURGE MODULE
FILTER MODULE
PURIFIER
DEDICATED FILL HOSE
LOW TEMPERATURE PROTECTION
BULK DELIVERY PAD PACKAGE
UHP PIPING
VMB
VMB
BULK SPECIALTY GASES
GIB
GIB
GIB
GIB
UHP PIPING
GAS MONITORING SYSTEM (ANALYTICAL)
SEMICONDUCTOR PROCESS TOOLS

FIGURE C8.16 Ultra-high-purity gas supply system. *(Courtesy of Praxair, Inc.)*

compressors, a cryogenic distillation column, purification equipment to remove selected impurities from the air or product streams, control systems to regulate flow and pressure of products delivered to the customer, filtration systems to remove particulate contamination, and a piping system to deliver the gas to the customer's point of use.

Other bulk gases and backup supplies for nitrogen are supplied from bulk liquid storage pad packages. These systems typically consist of a bulk liquid storage tank, a vaporizer to convert the liquid to gas, control systems to regulate the flow and pressure delivered to the customer, gas purifiers to remove any residual trace gas impurities, filtration systems to remove particulate contamination, and a piping system to conduct the gas to the customer's point of use.

In some cases, liquid supply is needed also. Usually the liquid is transported to the point of use in a small storage vessel or dewar. For some supplies, the liquid may be piped directly to the point of use using UHP liquid vacuum-insulated piping (VIP). In these instances, the inner carrier pipe of the VIP must meet the same requirements as the UHP gas piping.

Most specialty gas supply systems are from special high-pressure, high-purity cylinders, or from bulk specialty gas supply systems if their usages are high. Bulk specialty gas supply systems replace the high-pressure cylinders typically used with larger volume containers such as high-pressure modules or tube trailers or special bulk containers for liquefied specialty gases. Specialty gas supply systems typically consist of the gas source (cylinder or bulk) with the appropriate gas cabinet or gas panels with controls to regulate the flow and pressure to the customer; valve manifold boxes (VMBs) or panels to distribute to multiple use points where appropriate; gas isolation boxes (GIBs) to isolate sources of gas at a point of use; and interconnecting piping. Piping may be single-wall or double-contained, depending on gas characteristics and local codes and regulations. These installations may include purifiers where appropriate.

A schematic representation of a typical supply system to a fab is shown in Fig. C8.16.

SYSTEM DESIGN AND FABRICATION REQUIREMENTS

UHP gas supply systems must meet extremely stringent design, fabrication, installation, checkout, and commissioning requirements. A brief description of typical requirements is presented in this subsection.

Design Requirements

Designers of UHP gas systems need to consider many items often thought to be unrelated to the piping design. Obviously, the designer must consider the basic system requirements such as flow and pressure. Basic material compatibility within the system and especially with the gas itself must also be considered, since many of the gases are toxic and/or corrosive and/or flammable. But the designer must also look at the entire facility design philosophy and be familiar with the basic safety considerations, codes, and regulations. What quantities of gases will be permitted on-site for use and for storage? How will hazardous gas monitoring and toxic gas detection be handled? Answers to these questions may alter gas systems design, determine which systems are to be double-contained, and how the containment system is to be installed and monitored.

Once these considerations are resolved, then the system designer can proceed and address such things as purity and contamination issues. Traditional industrial gas systems are considered clean when contamination levels meet parts-per-million (ppm) requirements. In the semiconductor industry, however, contamination levels must meet purity requirements on the order of less than 1 ppb. For instance, particulate cleanliness may require the following specifications:

< 10 particles/ft^3 $\geq .01\,\mu$m in size (< 380 particles/m^3 $\geq 0.4\,\mu$in in size)

< 1 particle/ft^3 $> 0.1\,\mu$m in size (< 38 particles/m^3 $> 4\,\mu$in in size)

Trace gas impurities are typically trapped within parts of the system during component manufacture and system assembly, and later released into the process stream. Joining materials, laps within joints, screw threads, and other cavities can trap moisture, welding gases, and other contaminants and can become long-term outgassing sources, often referred to as virtual leaks. For this reason, such geometric discontinuities must be eliminated from the system by design and through proper fabrication and installation practices.

Particulate contamination is found in many of the same places as the trace gas contaminants (i.e., crevices, joints between mating pieces, dead-end legs off the process stream). In addition, particulates become trapped within indentations and small voids that exist within the natural roughness of most materials. For this reason, all pipe and component surfaces exposed to process gas streams are polished as smoothly as possible to eliminate contamination from this source. Industry standards typically require surface finishes to be electropolished to a value of less than 7 μin Ra (0.28 μm Ra) roughness. Electropolishing also leaves an enriched chromium oxide layer on the surface. Alternative surface treatments such as special passivation techniques are sometimes used in selected system designs, especially for corrosives.

Particles can also be generated by erosion of the process stream over surfaces of system components in the flow path. Also, contact between moving parts scrapes off metal particulates from contacting surfaces. Therefore, sharp edges, rough surfaces, and sliding or contacting surfaces must be eliminated from the design.

Many process conditions promote the generation of particulates or promote the release of particulates from component surfaces. High process gas velocities erode particulates from component surfaces. Vibration or mechanical shocks shake loose particulates resting on process flow surfaces. These actions can either be caused by external conditions such as adjacent rotating or reciprocating machinery that is not properly dampened or isolated from the system, or from valve or regulator operation within the system. Valve or regulator operation may also generate particles resulting from contact and erosion of moving surfaces.

Finally, transient process conditions can also generate contamination. Variations in system temperatures may enhance release of trace-gas impurities or cause thermal expansion and contraction that could cause particulate release. Outgassing and particulate shedding upon system start-up can also release contamination into the process stream.

The basic design concept in UHP gas systems design is to *design clean, build clean, and operate clean*. The UHP gas systems should be designed to be leak-free, outgas-free, deadspace-free, and particle-free. Component selection should include a thorough evaluation of all the components in static, dynamic, and impacted conditions.

Materials of Construction

The obvious starting point in meeting requirements of this type is to use the right materials. All materials must be compatible with the process gas itself in order to avoid such problems as corrosion. In addition, all materials in the system must be compatible with each other to avoid chemical or electrical reactions between different materials and again to prevent corrosion problems.

The only material generally acceptable for fabrication of bulk gas piping and system components is 316L (low carbon) stainless steel. In addition, the steel must have low sulfur content in order to obtain better weld qualities. Where 0.035 percent sulfur content is acceptable for normal applications, the sulfur content for UHP systems should be in the 0.003 to 0.017 percent range.

As the semiconductor industry continues to reduce feature size and line widths, component and tubing manufacturers have to evaluate and address ever-increasing concerns over not just the sulfur content, which impacts both weldability of the system and machinability of the component, but also such concerns as nonmetallic inclusions in the base steel. This has led to the increasing use of vacuum arc remelt (VAR) or VIM/VAR and other specially produced 316L stainless steels.

Additionally, gas-absorbing materials (especially nonmetallics) must be avoided. Contaminant gases dissolve into many materials of construction. This occurs primarily in nonmetallic components such as valve seats and filter cartridges, but it can also occur in the metallic parts. Since so much steel exists in the system components, dissolved gases within these components could present a serious contamination problem. Special manufacturing procedures, as well as final cleaning and conditioning procedures, must be considered to reduce dissolved gases within steels and other metals used in ultraclean systems.

Many nonmetallic materials, particularly those used in the filter cartridges, tend to dissolve gases, primarily water vapor. This is one of the most serious contaminants in semiconductor fabrication. Special materials or special procedures to remove the contaminants are necessary to prevent these contaminants from entering the system.

Any material not used in the particular semiconductor fabrication step could cause unacceptable contamination. Heavy-metal ions cause severe problems when they enter the semiconductor fabrication process. Metals such as sodium used in the fabrication or cleaning process of other metallic parts could leave undesirable metal ions on or within the parts. These ions must also be eliminated as much as possible.

Ideally, all pipe and components for one piping run should be of a single heat. This ensures that chemical properties of the two pieces at a weld joint are similar. In practice, this is often impossible. Most important is to ensure that all tubing and components have similar chemistries to guarantee weldability. If it is necessary to use a component with a dissimilar chemistry, care must be exercised to ensure weldability and integrity.

Standard elastomeric seal materials such as Teflon®, Kel-F™, etc., are acceptable for seals. However, if metallic seals can be designed into the system, greater leak-tight systems are possible. For this reason, valves with diaphragm or bellows seals on the stems should be used to totally isolate the product stream from external contamination.

Purity and cleanliness are important. Outgassing of dissolved or adsorbed gases must be reduced to very low levels. This is sometimes accomplished by special material processing such as passivating steels in acid mixtures or by subjecting steels to a double-melt process. It may be necessary to "bake out" some of the components or the entire system, if the contamination is serious, to drive off the adsorbed gases.

Welding

Conventional welding practices such as lap and socket welding are unacceptable for UHP application since they do not permit full penetration and leave overlaps and crevices that are very difficult to clean, creating virtual leaks. Hand welding, which leaves rough surfaces on the interior, is also unacceptable. Rough surfaces, as well as discoloration from the heat-affected zone, are sources of particulate generation. Rough surfaces also retain more moisture.

All process line tube joining is done by autogenous orbital butt welding performed by special automatic process welding machines. The joint to be welded is purged both internally and externally with high-purity inert argon to avoid oxidation of the hot weld surface. A good orbital weld must be free of stain on the product surface, can have no undercut or concavity of the weld area, and must have a generally smooth process surface finish. Weld buildup and metal puddling are not acceptable.

Weld samples (or coupons) must be made at the beginning and end of each shift or whenever the weld machine variables or parameters such as line size or heat number are changed. These weld coupons must be marked with the welder's name, and a log of all sample welds must be maintained.

Weld requirements for field welds are the same as for shop welds. That is, all welds must be autogenous orbital welds wherever possible. All welding and weld preparation takes place in either a clean room or a controlled work area to maintain system cleanliness. Field welders must pass the same certification requirements as shop welders.

Fabrication and Installation

Fabrication and installation procedures for UHP systems are not dramatically different from normal industrial practice, except for cleanliness. Because of such similarity, cleanliness becomes analogous to quality or safety in that it involves a culture rather than a procedure. Procedures are easy to establish; cultures are not. A culture requires a completely new approach to the fabrication and installation process.

Fabrication of UHP gas supply systems must be conducted in as clean a manner as possible. The work should be done in an enclosed shop where clean conditions can be controlled more easily. Generally, it is less expensive to build as much as possible in the shop. To provide the cleanest conditions possible, all component fabrication must be conducted in a clean room, preferably at least Class 100 quality, as determined by federal standards.

The UHP gas systems must be fabricated as a system. Each step in the fabrication and installation process involves UHP argon purges. Once the fabrication process begins, the entire system should be kept under a UHP argon purge until the system is ready for introduction of the process gas at start-up.

Since cleanliness is a prime requirement, the cleaning process is one of the most critical steps in all stages of fabrication and assembly. As stated earlier, in addition to general cleaning, cleanliness involves polishing (i.e., mechanical, chemical, or electropolishing). All parts must be cleaned at critical steps in the manufacturing process and must be kept clean between fabrication steps and during shipping.

The best method of cleaning is to electropolish the component. This procedure actually removes some of the surface metal, along with any contaminants on the surface.

All gas supply system components such as valves and regulators should be fabricated in a shop where cleanliness can be controlled. Also, some subassemblies and piping "spools" should be fabricated in a cleanliness-controlled shop area. However, fabrication of the gas distribution piping to interconnect the various components is usually done in the field at the job site. This exposes the components and piping pieces to contamination from the atmosphere. Therefore, the division of work between the shop and the field must be carefully considered.

Components must be packaged to ensure the cleanliness level is maintained. Double-wrapping in plastic bags is a minimum requirement. Piping must have the ends capped. The tubes must be pressurized with pure nitrogen or argon, or sealed in a pressurized container. Consideration must be given to both the final destination and the route of transit. Changes in altitude, and hence pressure, could damage packaging.

Once the clean components arrive at the plant site, they must be stored so that the cleanliness of the components is maintained. While waiting for installation, all components must be stored in their protective wraps, and only opened when ready to be finally installed.

Special care and procedures must be used to install the component without introducing unnecessary contamination. It may be necessary to provide a portable clean room at the installation site to perform some of the required on-site fabrication in as clean an environment as possible. The clean room should be at least Class 100 quality. As much of the subcomponent assembly as possible should be done in this portable clean room. After subcomponent fabrication, all open ends of "spool pieces" must be covered with an anti-static polyethylene or anti-static mylar wrap and kept sealed until just prior to welding into the final assembly.

It may also be necessary to construct a clean environment around some system parts to ensure that minimum contamination is introduced as final component installation is performed.

To reduce the possibility of atmospheric contamination entering the partially fabricated piping system, the portion of the system that has been completed must be continually purged with a pure, inert gas filtered to submicrometer levels. Since inert gases are used for purging and for maintaining clean conditions, safety provisions must be made to protect personnel against asphyxiation.

In addition, all tools that might come in contact with process gas surfaces must be maintained in as clean a condition as possible. These tools must be specially cleaned; used only on the clean system; and stored in the clean room or a clean environment.

QUALITY ASSURANCE

An independent quality assurance representative should be used to review and approve all installation procedures for the construction of a gas supply system, and to conduct certain tests and inspections as agreed to by the owner. These procedures and tests should include the following activities:

1. Inspect the precleaned, UHP components prior to shipment.

2. Review and approve written procedures for the fabrication and field installation of the UHP piping system.
3. Qualify personnel to work on the UHP piping system, including welder qualifications.
4. Approve weld coupons prior to actual production welding each day.
5. Observe and inspect actual construction work to ensure that agreed-upon procedures are being followed.
6. Witness leak tests on the UHP piping system.
7. Conduct or witness analytical construction verification testing of the gas system for moisture, oxygen, hydrocarbons, and particulates during construction.

To ensure that minimal contamination migrates into the UHP gas supply system during operation, the gas supply piping system must be as leak-tight as possible. Extensive helium leak testing using either a helium-argon test mixture under pressure on the inside of the piping (outboard test) or pure helium on the outside with a vacuum on the inside of the piping (inboard test) must be conducted in which each component, piping system weld, and mechanical joint is separately tested. Specification of leak rates of less than 1.27×10^{-6} ft^3/hr (10^{-9}/sec) at one atmosphere of helium are typically required. Use of either the inboard or outboard test method may be acceptable; each has specific benefits and problems. The designer must take into account which method is to be used.

Construction verification testing of the system may be required at several points in the project installation schedule in addition to certification at completion. The quality assurance representative should also oversee the final analysis of the UHP system to verify that it meets all product purity specifications.

CHECKOUT AND START-UP

The same care that was taken in the design and installation of the UHP gas system must be extended to system start-up. If proper precautions are not taken, all the benefits of a UHP installation can be nullified with the introduction of gross contamination into the system. Typically, the gas supplier oversees the start-up of the gas supply and distribution systems in coordination with the customer. Great care must be exercised so as not to contaminate the system.

The entire system must be systematically purged of the weld argon and test gases and replaced with product gas. For example, if an outboard helium leak test was conducted, it must be recognized that the helium has permeated into the elastomeric materials such as valve seats, and that trapped gases may be downstream of isolation valves that were shut off to isolate segments of the system during testing.

Finally, since the output yield of semiconductor fabs is so dependent upon the purity and cleanliness level of the gas supplies, knowledge of system operation and cleanliness level is necessary at all times to warn of poor operation, back-contamination, or impending performance degradation. Continuous, automatic, computer-controlled, analytical monitors have been developed to very rapidly survey all critical operating parameters, gas purities, and particulate cleanliness. These monitors analyze system maladies and either send out alarms with suggested corrections or correct system adjustments automatically.

CHAPTER C9

REFRIGERATION SYSTEMS PIPING

William V. Richards
Refrigerant Consultant
Lincolnshire, Illinois

The broad term *refrigeration* refers to a general science concerned with the use of producing temperatures below normal for commercial or other useful purposes. Refrigeration piping is used in conjunction with refrigeration equipment. Refrigerants are fluids which absorb heat by evaporating at a lower temperature and pressure and transfer heat out when they condense at a higher pressure and temperature. The increase in pressure necessary to elevate the temperature level is produced by a compressor of the reciprocating, rotary, or centrifugal type. In the case of an absorption system, the transfer of heat, thereby boiling the more volatile refrigerant out of a solution.

Fluids which do not change state are sometimes used to transfer heat in an indirect system. Such fluids are called *secondary coolants*. To be classified as a secondary coolant, the fluid must be used for the transfer of heat without a change in its state. Brine, a solution of salt and water, is a secondary coolant.

Many fluids have been used as volatile refrigerants in the evaporation, compression, condensing, and expansion cycle. This chapter will deal with application and structural design of piping for the more commonly used volatile refrigerants such as ammonia and some of the halogenated hydrocarbons. It will also cover general methods for other refrigerants where specific tables are not presented. Since volatile refrigerants are used in the liquid, vapor, and mixture phases, each of these will be treated separately.

Many fluids have been used for brines. Originally, the term *brines* applied to salt solutions such as calcium chloride or sodium chloride. The use of such salt brines permitted the transfer of heat at lower temperature levels without introducing refrigerant of the volatile type into refrigerated spaces. These brines were commonly used for cold storage plants, ice plants, or commercial and process refrigeration.

Solutions of glycols are also used as secondary coolants. Ethylene glycol and propylene glycol are most commonly used for this purpose. Several other compounds or mixtures have been developed specifically for the purpose of heat-transfer media. These compounds are specifically designed to have high thermal capacities, low viscosities, and other desirable properties for high heat transfer and low pressure losses.

Two major codes relate to refrigeration piping. One of these is the American Standard Safety Code for Mechanical Refrigeration. This code is reviewed and revised periodically. The most recent edition at the time of this writing was issued in 1994. This code is sponsored by the American Society of Heating, Refrigerating, and Air Conditioning Engineers and has been adopted by many states and municipalities to be the existing law in these localities. This Code will be referred to frequently in this section and will be designated as ANSI/ASHRAE 15.[1]

Another important Code on piping is the American Standard B31 Code for Pressure Piping.[2] Section B31.5 covers refrigeration piping and relates to structural design rules, fabrication, construction, and testing. The code in this section will be referred to as the ASME B31.5 Code.

This section recognizes and uses the definitions included in Sec. 3 of ASHRAE 15. The definitions included in Sec. 500.2 of the ASME B31.5 Code are also used. In general, the definitions in these two Codes coincide with definitions in the ASME Boiler Code, Sec. VIII, usually called the Pressure Vessel Code.[3] In addition, the ASME B31.5 Code recognizes and refers to the basic definitions of the American Welding Society.

Other basic definitions accepted by the refrigeration and air-conditioning industry are given in ASHRAE *Terminology of Heating, Ventilation, Air-Conditioning and Refrigeration*, published by the American Society of Heating, Refrigerating, and Air Conditioning Engineers.[4]

REFRIGERATION CYCLES

Compression System

Figure C9.1*a* shows a typical single-stage refrigeration cycle plotted on a pressure-enthalpy chart. Figure C9.1*b* is a typical diagram of a single-stage compression system and shows a compressor, a condenser, an optional receiver, an expansion device, and an evaporator. The state points on the line diagram of Fig. C9.1*b* are numbered to correspond to the same points on the pressure-enthalpy chart of Fig. C9.1*a*.

In a typical system, P_1 represents the pressure in the evaporator corresponding to the temperature at which the refrigerant is evaporating. From point 1 to point 2, the refrigerant vapor is carried to the compressor in a suction line. The pressure-enthalpy chart indicates a small pressure drop in this line. From point 2 to point 3, the refrigerant vapor is compressed. The connection between points 3 and 4 represents the discharge, or hot-gas, line, and the pressure-enthalpy chart also indicates the pressure drop due to friction in this line. Desuperheating and condensation of the refrigerant at constant pressure in the condenser occur between points 4 and 5. The liquid line is represented by the section between point 5 and point 6. From point 6 to point 7, there is a representation of the pressure reduction or "expansion" through the expansion device. From point 5 to point 8, the refrigerant is a mixture of liquid and vapor because of the expansion at constant enthalpy. At point 8, the liquid and vapor mixture enters the evaporator; heat transferred from the evaporator results in evaporation of the liquid in the liquid-vapor mixture and, as indicated, a slight superheating of the resultant vapor. At point 1, the cycle is completed.

In this chapter, the line between points 1 and 2 will be referred to as the *suction line*. The pipe or tubing between points 3 and 4 will be designated as the *hot-gas*

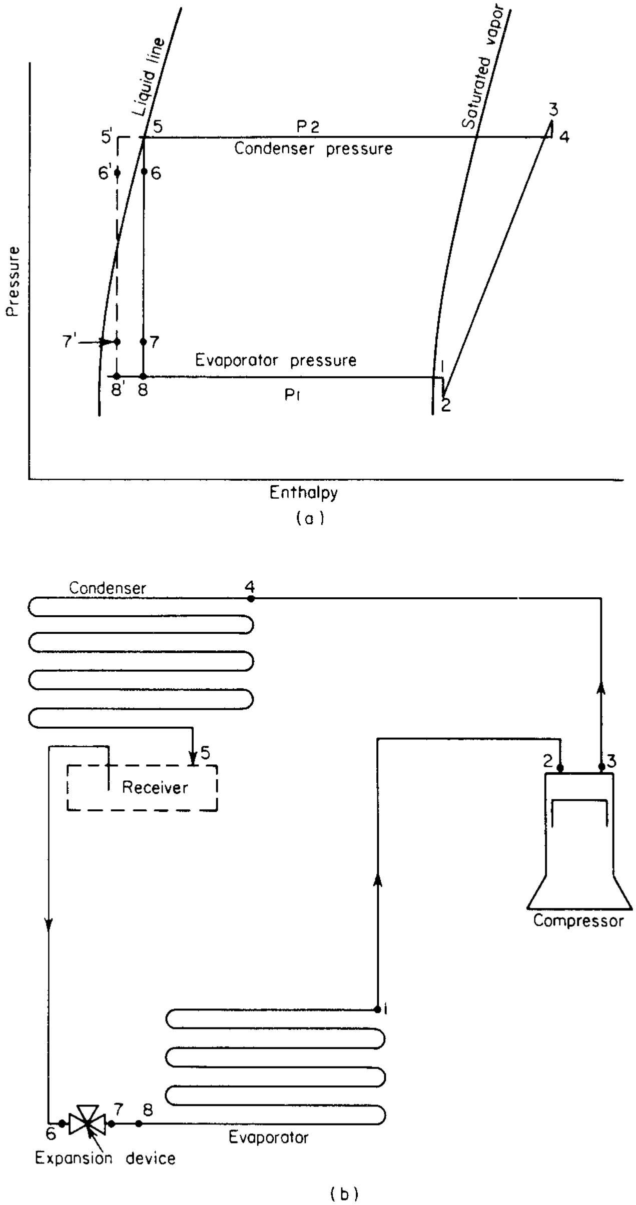
Liquid line
Saturated vapor
5'
5
P2
Condenser pressure
3
4
6'
6
Pressure
7'
7
Evaporator pressure
1
8'
8
P1
2
Enthalpy
Condenser
4
5
Receiver
2
3
Compressor
1
6
7
8
Expansion device
Evaporator

(a)

(b)

FIGURE C9.1 Compression refrigeration cycle. *(Courtesy Carrier Air Conditioning Co.)*

line. The piping between points 5 and 6 will be termed the *liquid line before expansion,* and that between points 7 and 8 will be called the *liquid line after expansion.*

Absorption System

Figure C9.2 shows a typical piping arrangement for an absorption-refrigeration cycle in which a lithium salt solution is used with water as the refrigerant. In such a system, the absorber and generator serve the same purpose as the compressor in a compression system. The refrigerant is absorbed in solution at low pressure in the absorber and is pumped to the generator, where the refrigerant is boiled out of the solution at high pressure. The state points are numbered in Fig. C9.2 to correspond to the similar points of the compression system cycle in Fig. C9.1*a*.

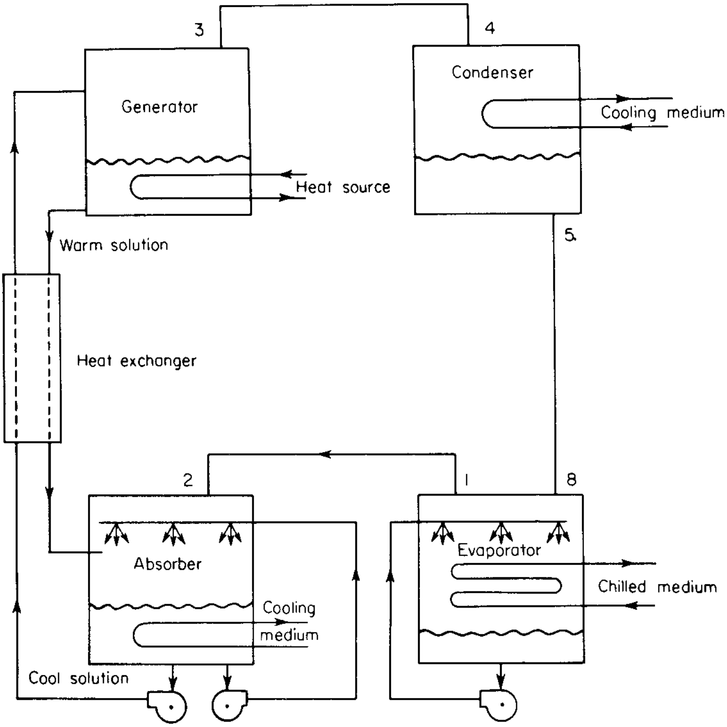
3
4
Generator
Condenser
Cooling medium
Heat source
5
Warm solution
Heat exchanger
2
1
8
Absorber
Evaporator
Chilled medium
Cooling medium
Cool solution

FIGURE C9.2 Absorption refrigeration cycle, lithium bromide type. *(Courtesy Carrier Air Conditioning Co.)*

For other types of absorption systems (such as ammonia and water), a rectifier or a fractionating-column type of purifier would be installed between the generator and condenser. Also, the evaporator might be remote or of some other type, such as a flooded cooller or a direct expansion type in which the refrigerant passes through coils.

In a consideration of the piping of an absorption system, the piping between points 3 and 4, 5 and 8, and 1 and 2 may be handled in a manner similar to those of a compression system when the different fluids and flow rates which might be encountered are taken into account. The solution lines between the absorber and generator and through the heat exchanger would be treated as brine lines in the case of lithium bromide or lithium chloride systems. For ammonia-water systems, properties of aqueous solutions of ammonia are available, and these lines would be desinged in the same manner as would be brine or water lines.

Present-day absorption-refrigeration systems are integrally designed as complete units, and in many instances the enitre assembly including the piping is made at the factory. For these reasons it is seldom necessary to consider piping for an absorption system as a separate design problem. However, the principles involved in this chapter could be applied to the corresponding sections of an absorption system.

Flow Rates

Refrigeration is usually measured in tons (kW) of refrigeration or in Btus per hour. The relationship between these is

$$1 \text{ ton of refrigeration} = 200 \text{ Btu/min or } 12{,}000 \text{ Btu/h} = 3.517 \text{ kW}$$

$$(1 \text{ kW} = 1 \text{ KJ/s} = 0.2843 \text{ Tons})$$

For selection of piping, it is necessary to relate refrigeration rate to flow rate of the refrigerant. Since the refrigerant changes state in the process, it is customary to calculate refrigerant flow in pounds per hour or per minute (kg/s). This weight flow rate for a constant rate of refrigeration will be constant throughout the system (for a single-stage system). The volume of refrigerant handled at the various points of the cycle can be determined if the density at these various points is known. Since the volume handled in a suction line is important not only for the piping selection but also for the compressor selection, charts are frequently made showing the cubic feet per minute per ton ($M^3/s \cdot kW$) of refrigerant gas or vapor at this point.

To calculate the flow rate of refrigerant for a given rate of refrigeration the following procedure is used:

$$\frac{\text{lb}}{(\text{min ton})} = \frac{200}{(h_g - h_f)} \tag{C9.1}$$

$$\left(\frac{\text{Kg}}{\text{s} \cdot \text{kW}} = \frac{\text{Kg}}{\text{KJ}} = \frac{1}{hg - hf}\right) \tag{C9.1M}$$

where h_g is the enthalpy of dry saturated vapor at the evaporator outlet pressure or temperature and h_f is the enthalpy of the liquid refrigerant at the expansion device inlet.

To calculate the flow rate it is necessary to have thermodynamic properties of the refrigerant available. After the mass-flow rate has been determined as shown in the equation, it is possible to determine the volume flowing at various points in the system.

If the specific volume of the refrigerant is known at the state point leaving the evaporator corresponding to point 1 in Fig. C9.1*a*, the volume at that point can be determined as follows:

$$\frac{\text{cfm}}{\text{ton}} = \frac{200\,V}{(h_g - h_f)} \tag{C9.2}$$

$$\left[\frac{\text{M}^3}{\text{s}\cdot\text{kW}} = \frac{V}{(h_g - h_f)}\right] \tag{C9.2M}$$

where V is the specific volume of the vapor at the evaporator suction temperature. For purposes of design, this value may be taken as the specific volume of dry, saturated vapor.

In the previous equations, h_g corresponds to the enthalpy of the refrigerant vapor at point 1 leaving the evaporator. In the flooded type of cooler, this state point is close to saturation, but for a direct-expansion coil-type evaporator, the vapor may be slightly superheated. For low amounts of superheat, it is permissible to ignore the superheat for purposes of selecting the piping, although this should not be done for compressor selection or for very accurate determination of the velocity.

The value h_f corresponds to the enthalpy of the liquid entering the expansion device. Some subcooling of liquid may exist at this point, in which case point 6′ would result in a more accurate figure. However, for selection of piping, it is customary to use the enthalpy of the saturated liquid at the condensing temperature (point 5) for determining the flow rate. Later considerations will show when the actual state of the liquid may have an effect on the liquid line size. A later example will illustrate methods of calculation for flow rate by weight and by volume in the suction line for a typical refrigerant.

Table C9.1 shows flow rates in pounds per minute per ton and cubic feet per minute per ton at the suction condition for three common refrigerants: ammonia, refrigerant R134a (tetrafluoroethane) and refrigerant 22 (monochlorodifluoromethane). This table is based on enthalpies read at saturated conditions of refrigerant vapor and liquid as previously mentioned.

The cubic feet per minute per ton (dm^3 per second per kW) in the discharge line cannot be calculated readily because the actual temperature at the end of the compression is a function of the compressor design and efficiency and these will vary among various manufacturers. The discharge cubic feet per minute per ton (dm^3 per second per kW) for single-stage systems can be approximated by the following formula:

$$\text{Discharge cfm/ton} = \text{suction cfm/ton} \times \frac{P_1}{P_2} \times 1.2 \tag{C9.3}$$

$$\left(\text{Discharge dm}^3/\text{s}\cdot\text{kW} = \text{suction dm}^3/\text{s}\cdot\text{kW} \times \frac{P_1}{P_2} \times 1.2\right) \tag{C9.3M}$$

where P_1 = absolute pressure at suction
P_2 = absolute pressure at discharge

This formula is not exact, but it will serve as an approximation when it is necessary to determine approximate velocities in discharge lines.

TABLE C9.1 Refrigerant Flow Rate

Refrigerant chemical formula (common name)		R-717 NH3 ammonia			R134a CH2FCF3 1,1,1,2-Tetrafluoroethane			R-22 CHCLF2 Chlordifluormethane		
Condensing temperature										
°C		30	35	40	30	35	40	30	35	40
°F		86	95	104	86	95	104	86	95	104
Evaporating temperature										
°C	°F	lbs/min per ton*								
0	32	0.410	0.420	0.429	2.89	3.02	3.17	2.70	2.81	2.92
−10	14	0.415	0.424	0.434	3.00	3.14	3.31	2.76	2.87	3.00
−20	−4	0.420	0.429	0.440	3.12	3.28	3.46	2.84	2.95	3.08
−30	−22	0.422	0.432	0.442	3.26	3.44	3.63	2.91	3.04	3.17
		Cfm/ton (suction line)†								
0	32	1.95	2.00	2.04	3.23	3.38	3.56	2.09	2.80	2.27
−10	14	2.85	2.92	2.99	4.87	5.11	5.38	2.97	3.09	3.22
−20	−4	4.31	4.40	4.51	7.52	7.91	8.34	4.32	4.50	4.69
−30	−22	6.68	6.84	7.00	12.04	12.69	13.43	6.50	6.77	7.08

* To convert to kg/s per kw, multiply by 2.1496×10^{-3}

† To convert to dm^3/s per kw, multiply by 0.1342

ALTERNATIVE REFRIGERANTS

Because of the depletion of stratospheric ozone, which is partly attributed to chlorine released to the atmosphere from chloro-fluro-carbon (CFC) chemicals, many alternative refrigerants made from fluorinated hydrocarbon gases are being evaluated within the refrigeration industry. The common CFC refrigerants R-12 and R-502 are no longer produced. The hydro-chloro-fluro-carbon (HCFC) refrigerants, such as R-22, are to be phased out of production in the United States by the year 2015, and earlier phaseouts are scheduled in Europe.

The natural refrigerants ammonia (R-717), propane (R-290), and carbon dioxide (R-744) are being promoted in new applications because when released they do not contribute to ozone depletion or to global warming. In addition to the customary use of ammonia in industrial food processing and storage, ammonia is now being widely used in district cooling plants for cooling of commercial buildings. Some food processing plants, now using R-12, R-22, or R-502, are converting or planning to eventually convert to ammonia. Some new processing plants are being designed to use R-22 currently and to convert to ammonia in the future. Propane is now being used in domestic refrigerators in Europe and Asia. Carbon dioxide is now being used as a low-stage refrigerant in supermarkets.

In the United States, the Environmental Protection Agency evaluates and regulates substitutes for the CFC ozone-depleting chemicals. The Significant New Alternatives Policy (SNAP) rule lists substitutes for R-11, R-12, and R-502 in both retrofit and new equipment.

- For new centrifugal chillers which previously used R-11, R-12, R-113, R-114, or R-500, the substitute refrigerants are R-123, R-124, R-22, R-134a, R-227ea, R-717, and absorption systems.
- For new reciprocating chillers, which previously used R-12, the substitutes are R-22, R-134a, and R-227ea.
- For direct air-conditioning applications, previously using R-12, the popular substitute is R-134a.
- For cold storage and retail food refrigeration formerly using R-12 and R-502, the substitutes are R-22, R-134a, R-227ea, R-402A, R-402B, R-404A, R-507, and R-717 vapor compression.

TABLE C9.2*a* Temperature-Pressure Chart for Constant Boiling Point Refrigerants

Temp°C	R-717 psia	R-134a psia	R-22 psia	R-507 psia	R-290 psia	R-744 psia	Temp°F
−90		0.222	0.696	1.049	0.933		−130
−80		0.535	1.501	2.197	1.887		−112
−70	1.5825	1.162	2.965	4.228	3.532		−94
−65	2.2608	1.738	4.200	5.704	4.856		−85
−60	3.1688	2.312	5.434	7.571	6.180		−76
−55	4.3636	3.294	7.394	9.899	8.200	80.47	−67
−50	5.9112	4.276	9.354	12.76	10.22	90.03	−58
−45	7.8870	5.852	12.02	16.24	13.16	120.8	−49
−40	10.376	7.429	15.26	20.42	16.10	145.8	−40
−35	13.473	9.832	19.16	25.41	19.90	174.5	−31
−30	17.281	12.26	23.76	31.27	24.32	207.1	−22
−25	21.915	15.45	29.23	38.16	29.50	244.1	−13
−20	27.498	19.25	35.58	46.11	35.45	285.7	−4
−15	34.163	23.77	42.99	55.30	42.29	332.3	5
−10	42.050	29.08	51.46	51.29	50.07	384.2	14
−5	51.311	35.30	61.21	77.75	58.90	441.8	23
0	62.102	42.45	72.24	91.23	68.79	505.5	32
5	74.591	50.72	84.77	106.4	79.94	575.7	41
10	88.950	60.12	98.80	123.4	92.32	653.0	50
15	105.36	70.84	115.9	142.5	106.1	737.7	59
20	124.01	82.90	132.0	163.5	121.3	803.8	68
25	145.09	96.52	151.6	186.8	138.1	933.2	77
30	168.80	111.7	172.9	212.5	156.5	1045.9	86
35	195.35	128.6	196.7	240.8	176.7		95
40	224.94	147.4	222.5	271.8	198.6		104
45	257.80	168.2	250.9	305.7	222.5		113
50	294.15	191.2	281.8	342.7	248.6		122
55	334.21	216.4	315.5	383.3	276.6		131
60	378.23	243.9	352.0	427.7	306.9		140
65	426.45	274.1	391.7	476.3	339.8		149
70	479.12	306.9	434.7		375.1		158
80	598.88	381.9	531.3		454.3		176
90	739.77	470.5	644.3		545.9		194
100	904.32	576.1					212
110	1095.5						230

Pressure is in psia; subtract 14.696 for gauge pressure (for kPa, multiply psia times 6.8947, subtract 101.33 for gauge pressure).

TABLE C9.2*b* Temperature-Pressure Chart for Zerotropic Mixtures with Temperature Glide

Pressure psia	R404A Temp °F bubble	Dew	R407C Temp °F bubble	Dew	R410A Temp °F bubble	Dew	Pressure kPa
2.0	−113.74	−111.89	−108.95	−94.98	−119.71	−119.62	13.79
4.0	−94.84	−93.16	−89.91	−76.32	−101.65	−101.56	27.58
6.0	−82.60	−81.02	−77.61	−64.27	−90.00	−89.90	41.37
8.0	−73.32	−71.80	−68.30	−55.15	−81.18	−81.08	55.16
10	−65.74	−64.28	−47.71	−73.99	−73.89	−68.95	68.95
14	−53.64	−52.25	−48.60	−35.84	−62.53	−62.42	96.53
18	−44.02	−42.69	−38.99	−26.43	−53.45	−53.33	124.1
22	−35.95	−34.66	−30.94	−18.55	−45.84	−45.72	151.7
26	−28.95	−27.71	−23.97	−11.72	−39.26	−39.13	179.3
30	−22.75	−21.54	−17.80	−5.67	−33.43	−33.30	206.8
34	−17.15	−15.97	−12.23	−0.23	−28.17	−28.04	234.4
38	−12.04	−10.88	−7.15	4.78	−23.38	−23.25	262.0
42	−7.33	−6.19	−2.47	9.32	−18.97	−18.83	289.6
46	−2.94	−1.83	1.88	13.58	−14.87	−14.73	317.2
50	1.16	2.25	5.95	17.55	−11.04	−10.89	344.7
60	10.41	11.46	15.13	26.52	−2.40	−2.24	413.7
70	18.57	19.58	23.20	34.41	5.20	5.36	482.6
80	25.88	26.86	30.44	41.47	12.00	12.17	551.6
90	32.54	33.49	37.03	47.89	18.18	18.36	620.5
100	38.66	39.58	43.08	53.79	23.86	24.04	689.5
120	49.65	50.52	53.93	64.35	34.03	34.22	827.4
140	59.34	60.17	63.50	73.65	42.99	43.19	965.3
160	68.05	68.83	72.10	81.99	51.02	51.23	1103
180	75.97	76.73	79.92	89.57	58.33	58.44	1241
200	83.27	83.99	87.13	96.53	65.04	65.26	1379
220	90.04	90.72	93.81	102.98	71.27	71.49	1517
240	96.36	97.01	100.06	108.99	77.04	77.30	1655
260	102.29	102.92	105.93	114.64	82.53	82.75	1793
280	107.90	108.49	111.48	119.95	87.67	87.89	1931
320	118.24	118.78	121.74	129.75	97.19	97.39	2206
360	127.63	128.12	131.09	138.63	105.80	106.01	2482
400	136.24	136.67	139.70	146.75	113.71	113.91	2758
450	146.06	146.42	149.59	156.00	122.77	122.95	3103
500	154.99	155.25	158.69	164.41	131.05	131.22	3447
550			167.13	138.82	138.68	138.82	3792
600			175.04	179.00	145.72	145.83	4137
650			182.58	185.04	152.22	152.29	4481

For gauge pressure in psig, subtract 14.696: For gauge pressure in kPa, subtract 101.33. For temperature in °C = 5/9(°F-32)

The marketplace is determining the popular substitutes for the CFCs. The HCFCs such as R-22, R-402A, and R-402B will be eventually phased out. The present choices being made in the United States, as reported in the commercial news, are:

- R-134a and R-22 to replace R-12 in refrigeration systems
- R-134a, R-407C, and R-410A to replace R-22 in air-conditioning equipment
- R-404A, R-407A, R-507, and R-717 to replace R-22 and R-502 in refrigeration systems

Tables C9.2*a* and C9.2*b* show the temperature-pressure relation for the main candidates. The pressures shown may be expected in refrigerant lines when both liquid and vapor are present. Propane (R-290) is included; however flammable options are not used in equipment exposed to the public in the United States because of liability laws. Table C9.2*b* shows the pressure-temperature relation for blends of two or more components. These mixtures have temperature changes, called *temperature glides,* during vaporizing and condensing. Note that R-404A and R-410A have very little temperature glide, so that they may be treated similarly to azeotropes (mixtures with a constant boiling temperature, such as R-507). These and similar mixtures with very small glides are informally referred to as *near-aseotropic refrigerant mixtures* (NARMs). R-407A, R-407C, and many other blends have significant temperature glide. With careful design of evaporators and condensers, the glide can be used to improve efficiency. However, blends with significant temperature glide must be charged into the system in the liquid phase in order to maintain the percentage of the components. Also, blends with glide are not suitable for use in flooded evaporators.

PRESSURE DROP IN REFRIGERATION PIPING

There are two separate tasks when designing a refrigeration piping system. The first task is to select the size of a pipe for a given flow. The second task, determining pressure drop, is accomplished after the pipe size is selected. Both tasks use the same equation, which describes the pressure drop in fluid flow within piping.

However, the tasks must be addressed separately. Customary piping tables, such as C9.4 through C9.9, list capacities at specified temperature or pressure drops per unit length of piping. These tables are an aid to determining the pressure drop after the equivalent length is known. But the equivalent length depends upon the diameter selected. Thus it is clear that the listed capacities are only correct for the unit length basis used in developing the table and are not to be used as recommended capacities.

Darcy-Weisbach Equation

The pressure drop of most fluids in piping is described by the Darcy-Weisbach equation:

$$\Delta p = f\left(\frac{L}{D}\right)\left(\rho\frac{V^2}{2g}\right) \tag{C9.4}$$

$$\left(\Delta p = f\left(\frac{L}{D}\right)\left(\rho\frac{V^2}{2}\right)\right) \tag{C9.4M}$$

where Δp = pressure, psf (pa)

f = Moody friction factor, dimensionless

L = length of pipe, ft (m)

D = inside diameter of pipe, ft (m)

ρ = density, lb/ft^3 (kg/m^3)

V = velocity, ft/s (m/s)
g = gravity acceleration, 32.174 ft/s^2 (9.807 m/s^2)

Optimum Sizing

In order to select a pipe size, some previous experience or criteria is needed, other than the customary capacity tables. Figure C9.3 illustrates the economics of selecting a pipe size. Initially, it may seem that for a given flow and refrigerant condition, the optimum diameter of a long pipe will be greater than that of a short one. Richards[7] shows, however, that the optimum diameter is independent of length. The method sets the present installed cost of pipe minus the present worth of the lifetime pumping costs equal to zero, and then differentiates with respect to diameter to determine the optimum diameter. The length cancels in this analysis, which

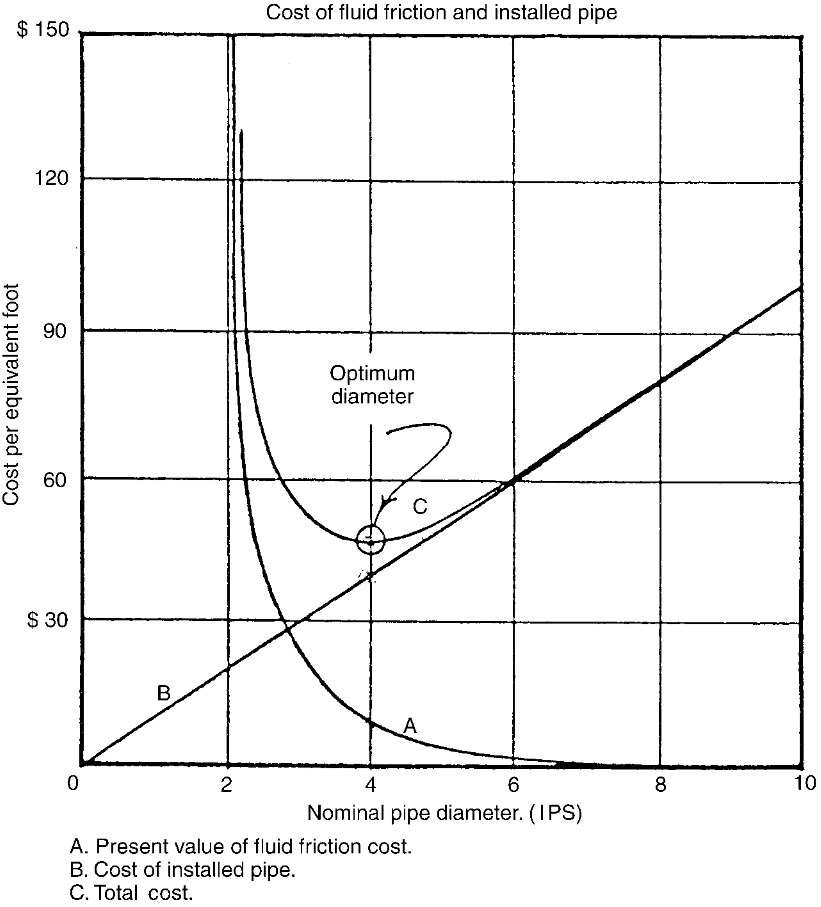

FIGURE C9.3 Cost of fluid friction and installed pipe.

proves that the optimum diameter is independent of length. The effect of longer lengths is to increase the power cost for operation and may, for extreme lengths, require a slightly larger pump or compressor. The first cost of the next-larger pipe size will always exceed the savings represented by the present worth of future power costs. The total owning costs of a smaller pipe size will always be greater than for an optimum choice, because the present worth of the future cost of operation will always exceed the first cost savings.

Studies[8],[9] recently made for R-717 and R-22 give some guidance for recommended piping capacities. Conservative conditions are assumed in ammonia industrial applications. Assume typical equipment efficiencies, running 40 percent of the time at full load for 15 years, with power cost of $0.05 per kW, the cost of money 5 percent higher than inflation, and with installed insulated pipe costs of $13.00 per in of dia per ft of length ($1.68 per mm of dia per m of length). The results of such studies can be expressed in recommended velocity pressures per velocity head, $\Delta p/k = \rho V^2/2g$ ($\Delta p/k = \rho V^2/2$). A more convenient form is to state the recommended equivalent temperature drop in a globe valve.

Recommended Temperature Drop Gradients for Vapor Flow in Industrial Applications

- For R-717 vapor, the result of such studies suggests that the temperature drop in a globe valve at low temperatures should be about 0.25°F (0.14°C), that is at −40°F (−40°C), and at high temperatures about 0.125°F (0.07°C), i.e. ≥ at 41°F (≥5°C).
- For R-22 vapor, the suggested temperature drop in a globe valve at low temperatures should be about 0.5°F (0.28°C), and at high temperatures about 0.25°F (0.14°C).

Practical temperature drop gradients can be much greater with higher installation and operating costs, with less running time, and with shorter capital recovery life. For each doubling of any combination of increased costs or reduced running time or life expentancy, the optimum capacity increases by 28 percent, the pressure gradient increases by 58 percent in copper tube and by 62 percent in steel pipe. The natural refrigerants R-290 and R-744 use similar pressure gradients as R-717. All halocarbon refrigerants use similar pressure gradients to R-22.

Comparing Pipe Flow Capacities

To compare pipe flow capacities we can rewrite the Darcy equation in terms of mass flow. Since mass flow equals area times velocity times density, we can insert the mass flow divided by area and density in place of velocity.

$$\Delta p = f\left(\frac{L}{D}\right)\left(\frac{w^2}{2 * A^2 * \rho * g}\right) \tag{C9.5}$$

$$\left(\Delta p = f\left(\frac{L}{D}\right)\left(\frac{w^2}{2 * A^2 * \rho}\right)\right) \tag{C9.5M}$$

where w = flow, lbm/s (kg/s)
A = inside flow area of pipe, ft^2 (m^2)

Rearranging the equation to show the mass flow capacity:

$$w = A\left(\frac{2 * g * \Delta p * \rho * D}{f * L}\right)^{0.5} \tag{C9.6}$$

$$\left(w = A\left(\frac{2 * \Delta p * \rho * D}{f * L}\right)^{0.5}\right) \tag{C9.6M}$$

Now, since it can be shown that all pipe sizes have similar L/D ratios and since the pressure drop and density are relatively constant for a given application, we can show that the mass flow is proportional to the area divided by the square root of the friction factor.

$$w \approx \frac{A}{\sqrt{f}} \tag{C9.7}$$

The relative values of friction factors for fully turbulent flow extend reasonably well in the area of the Moody chart between laminar and fully turbulent flow where most applications occur. Table C9.3 compares optimum pipe flow capacities for R-717 suction lines compared to capacities listed in Table C9.7. The friction factors used are those for fully turbulent flow.

The obvious point to be made in the previous comparison is that the listed capacities in Tables C9.4 through C9.9 are not recommended capacities. These tables merely provide a convenient starting point for adjusting the capacity and temperature drop to other lengths and to other capacities. After a pipe size is

TABLE C9.3 Ammonia Vapor Flow Methods Compared

IPS	1	1½	2	3	4	5	6	8	10	12
DN	25	40	50	80	100	125	150	200	250	300
d(inch)	*0.957*	*1.50*	*2.067*	*3.067*	*4.026*	*5.045*	*6.065*	*7.981*	*10.02*	*12.00*
d(mm)	*26.64*	*40.89*	*52.50*	*77.93*	*102.3*	*128.2*	*154.1*	*202.7*	*254.5*	*304.8*
f	*0.0225*	*0.0202*	*0.0190*	*0.0173*	*0.0163*	*0.0155*	*0.0149*	*0.0141*	*0.0134*	*0.0130*
multiplier^1	*0.0481*	*0.1247*	*0.2441*	*0.5632*	*1.0000*	*1.6109*	*2.3725*	*4.2280*	*6.8205*	*9.9599*
Optimum^2 tons −30°F	3.3	8.6	17.1	**39.4**	69.9	113	166	302	477	696
Table C9.3 tons −30°F ½ psi/100 ft	1.9	7.3	14.1	**40.1**	83.5	150	244	500	900	1450
Optimum^2 tons + 40°F	9.0	23.3	46.0	**106.2**	189	304	447	815	1286	1878
Table C9.3 tons + 40°F ½ psi/100 ft	4.3	17.1	32.8	**92.5**	190	342	558	1135	2040	3325

Note 1: The multiplier is A/f$^{0.5}$, relative to IPS 4 (DN 100) at 1.0000.
Note 2: Optimum capacity is from Reference 9.

selected, the equivalent lengths including the valves and fittings are totaled from Tables C9.10*a*, *b*, and *c*. The pressure drop or temperature drop can be found by using the formulas in Notes 2 and 3 under Tables C9.7, C9.8, and C9.9. There are factors other than economics, that affect line sizes. These factors are discussed in the following paragraphs.

Suction Lines

In Fig. C9.1*a*, the evaporator pressure between points 8 and 1 is established by the heat load in the evaporator. The compressor pumps the refrigerant from point 2 to point 3. A pressure loss in the suction line between point 1 and 2 causes the compressor to operate at a lower suction pressure. Since the vapor expands at a lower pressure and since the compressor is essentially a fixed-volume device, a reduction in suction pressure causes a decrease in mass flow. The increased pressure differential due to pressure loss also results in more power per ton (per kW) of refrigeration.

Pressure drop and costs are not the only considerations in the selection of suction lines for refrigeration systems. The chlorinated hydrocarbons (CFCs and HCFCs) are miscible to some degree with mineral oil. The newer fluorinated hydrocarbons (HFCs) require synthetic lubricants in most cases to provide for mutual solubility that will keep the oil in circulation to enable the return of oil to the compressor. The sizing of oil return lines for vertical suction risers is discussed later in connection with Table C9.13.

It is customary to size suction lines so that the total loss in pressure doesn't exceed the equivalent of about 4°F (2.2°C) in saturated temperatures for halocarbon refrigerants and about 2°F (1.1°C) for ammonia. Greater equivalent pressure drops are tolerated in very long piping systems. Tables C9.2*a* and C9.2*b* reveal the relation between pressure change and temperature change for common refrigerants. Keep in mind that the system capacity loss, or the increased cost of refrigeration due to suction line pressure loss is about 2.2 percent per°F (4 percent per°C). Tables C9.4, C9.5, and C9.6 show suction line capacities in tons for two temperature loss rates per 100 feet (kW per K/m). The capacities are shown for single-stage systems with condensing temperatures at 86°F (30°C) for R-717 and 104°F (40°C) for R-134a and R-22.

When the liquid feed is precooled in economized or two-stage systems, the system capacities increase in proportion to the enthalpy increase between liquid and suction. Tables of the thermal properties of the refrigerant are required to assist in such an analysis. Table C9.7 for ammonia lists suction line capacities. Tables C9.8 for R-134a and C9.9 for R-22 list suction line capacities. The formulas in the table notes provide the means of adjusting the line capacity or temperature drop from the table values to actual values. The factors in Note 4 provide for the effect of different condensing temperatures.

The application of two-phase flow or the simultaneous liquid and vapor flow in return lines from evaporators to accumulators is not treated in this discussion. Suffice it to say that the pressure drop in horizontal two-phase flow increases the pressure drop approximately in proportion to the increase in the mass flow. This means that the velocity in the suction line for liquid overfeed applications should be reduced approximately by the reciprocal of the square root of the circulating number. The circulating number is the reciprocal of the refrigerant quality at the evaporator exit. For example, the velocity in return piping, for a circulating number of 4 (vapor quality at the exit of the evaporator is 0.25 or 3 parts liquid and 1 part

TABLE C9.4 (IP) Suction Line Capacities in Tons for Ammonia with Pressure Drops of 0.25 and 0.50°F per 100 ft Equivalent

Steel line size		Saturated suction temperature, °F					
		−60		−40		−20	
NPS	SCH	$\Delta t = 0.025$°F $\Delta p = 0.046$	$\Delta t = 0.50$°F $\Delta p = 0.092$	$\Delta t = 0.25$°F $\Delta p = 0.077$	$\Delta t = 0.50$°F $\Delta p = 0.155$	$\Delta t = 0.25$°F $\Delta p = 0.123$	$\Delta t = 0.50$°F $\Delta p = 0.245$
⅜	80	0.03	0.05	0.06	0.09	0.11	0.16
½	80	0.06	0.10	0.12	0.18	0.22	0.32
¾	80	0.15	0.22	0.28	0.42	0.50	0.73
1	80	0.30	0.45	0.57	0.84	0.99	1.44
1¼	40	0.82	1.21	1.53	2.24	2.65	3.84
1½	40	1.25	1.83	2.32	3.38	4.00	5.80
2	40	2.43	3.57	4.54	6.59	7.79	11.26
2½	40	3.94	5.78	7.23	10.56	12.50	18.03
3	40	7.10	10.30	13.00	18.81	22.23	32.09
4	40	14.77	21.21	26.81	38.62	45.66	65.81
5	40	26.66	38.65	48.68	70.07	82.70	119.60
6	40	43.48	62.83	79.18	114.26	134.37	193.44
8	40	90.07	129.79	163.48	235.38	277.80	397.55
10	40	164.26	236.39	297.51	427.71	504.98	721.08
12	ID	264.07	379.88	477.55	686.10	808.93	1157.59

Steel line size		Saturated suction temperature, °F					
		0		20		40	
NPS	SCH	$\Delta t = 0.025$°F $\Delta p = 0.184$	$\Delta t = 0.50$°F $\Delta p = 0.368$	$\Delta t = 0.25$°F $\Delta p = 0.265$	$\Delta t = 0.50$°F $\Delta p = 0.530$	$\Delta t = 0.25$°F $\Delta p = 0.366$	$\Delta t = 0.50$°F $\Delta p = 0.582$
⅜	80	0.18	0.26	0.28	0.40	0.41	0.53
½	80	0.36	0.52	0.55	0.80	0.82	1.05
¾	80	0.82	1.18	1.26	1.83	1.87	2.38
1	40	1.62	2.34	2.50	3.60	3.68	4.69
1¼	40	4.30	6.21	6.63	9.52	9.76	12.42
1½	40	6.49	9.34	9.98	14.34	14.68	18.64
2	40	12.57	18.12	19.35	27.74	28.45	36.08
2½	40	20.19	28.94	30.98	44.30	45.37	57.51
3	40	35.87	51.35	54.98	78.50	80.40	101.93
4	40	73.56	105.17	112.34	160.57	164.44	208.34
5	40	133.12	190.55	203.53	289.97	296.88	376.18
6	40	216.05	308.62	329.59	469.07	480.96	609.57
8	40	444.56	633.82	676.99	962.47	985.55	1250.34
10	40	806.47	1148.72	1226.96	1744.84	1786.55	2263.99
12	ID	1290.92	1839.28	1964.56	2790.37	2862.23	3613.23

Note: Capacities are in tons of refrigeration resulting in a line friction loss (Δp in psi per 100 ft equivalent pipe length), with corresponding change (Δt in °F per 100 ft) in saturation temperature.

vapor) should be reduced to 50 percent of the velocity allowed for the vapor flow alone. Vertical risers in two-phase flow require higher velocities or multiple risers to carry the liquid upward with reduced pressure losses. Pressure losses in two-phase flow are reduced when accumulators are located below and close to evaporators. When accumulators are located above evaporators, arrangements for separating and pumping the liquid return improve efficiency.

TABLE C9.4M (SI) Suction Line Capacities (kW) for Ammonia for Pressure Drops of 0.005 and 0.01 K/m Equivalent

Steel line size nominal DN	Saturated suction temperature, °C					
	−50		−40		−30	
	$\Delta t = 0.005$ K/m $\Delta p = 12.1$ Pa/m	$\Delta t = 0.01$ K/m $\Delta p = 24.2$ Pa/m	$\Delta t = 0.005$ K/m $\Delta p = 19.2$ Pa/m	$\Delta t = 0.01$ K/m $\Delta p = 38.4$ Pa/m	$\Delta t = 0.005$ K/m $\Delta p = 29.1$ Pa/m	$\Delta t = 0.01$ K/m $\Delta p = 58.2$ Pa/m
10	0.19	0.29	0.35	0.51	0.58	0.85
15	0.37	0.55	0.65	0.97	1.09	1.60
20	0.80	1.18	1.41	2.08	2.34	3.41
25	1.55	2.28	2.72	3.97	4.48	6.51
32	3.27	4.80	5.71	8.32	9.36	13.58
40	4.97	7.27	8.64	12.57	14.15	20.49
50	9.74	14.17	16.84	24.50	27.57	39.82
65	15.67	22.83	27.13	39.27	44.17	63.77
80	28.08	40.81	48.36	69.99	78.68	113.30
100	57.95	84.10	99.50	143.84	161.77	232.26
125	105.71	153.05	181.16	261.22	293.12	420.83
150	172.28	248.91	294.74	424.51	476.47	683.18
200	356.67	514.55	609.20	874.62	981.85	1402.03
250	649.99	937.58	1107.64	1589.51	1782.31	2545.46
300	1045.27	1504.96	1777.96	2550.49	2859.98	4081.54

TABLE C9.4M (SI) Suction Line Capacities (kW) for Ammonia for Pressure Drops of 0.005 and 0.01 K/m Equivalent *(Continued)*

Steel line size nominal DN	Saturated suction temperature, °C					
	−20		−5		+5	
	Δt = 0.005 K/m Δp = 42.2 Pa/m	Δt = 0.01 K/m Δp = 84.4 Pa/m	Δt = 0.005 K/m Δp = 69.2 Pa/m	Δt = 0.01 K/m Δp = 138.3 Pa/m	Δt = 0.005 K/m Δp = 92.6 Pa/m	Δt = 0.01 K/m Δp = 185.3 Pa/m
10	0.91	1.33	1.66	2.41	2.37	3.42
15	1.72	2.50	3.11	4.50	4.42	6.37
20	3.66	5.31	6.61	9.53	9.38	13.46
25	6.98	10.10	12.58	18.09	17.79	25.48
32	14.58	21.04	26.17	37.56	36.94	52.86
40	21.99	31.73	39.40	56.39	55.53	79.38
50	42.72	61.51	76.29	109.28	107.61	153.66
65	68.42	98.23	122.06	174.30	171.62	245.00
80	121.52	174.28	216.15	308.91	304.12	433.79
100	249.45	356.87	442.76	631.24	621.94	885.81
125	452.08	646.25	800.19	1139.74	1124.47	1598.31
150	733.59	1046.77	1296.07	1846.63	1819.59	2590.21
200	1506.11	2149.60	2662.02	3784.58	3735.65	5303.12
250	2731.90	3895.57	4818.22	6851.91	6759.98	9589.56
300	4378.87	6237.23	7714.93	10973.55	10810.65	15360.20

Note: Capacities are in kilowatts of refrigeration resulting in a line friction loss per unit equivalent pipe length (Δp in Pa/m), with corresponding change in saturation temperature per unit length (Δt in K/m).

TABLE C9.5 (IP) Suction Line Capacities in Tons for Refrigeration 134a (Single- or High-Stage Applications)

Line size		Saturated suction temperature, °F									
		0		10		20		30		40	
Type L copper, OD		Δt = 1°F Δp = 0.50	Δt = 0.5°F Δp = 0.25	Δt = 1°F Δp = 0.60	Δt = 0.5°F Δp = 0.30	Δt = 1°F Δp = 0.71	Δt = 0.5°F Δp = 0.35	Δt = 1°F Δp = 0.83	Δt = 0.5°F Δp = 0.42	Δt = 1°F Δp = 0.97	Δt = 0.5°F Δp = 0.48
½		0.10	0.07	0.12	0.08	0.16	0.11	0.19	0.13	0.24	0.16
⅝		0.18	0.12	0.23	0.16	0.29	0.20	0.37	0.25	0.45	0.31
⅞		0.48	0.33	0.62	0.42	0.78	0.53	0.97	0.66	1.20	0.82
1⅛		0.99	0.67	1.26	0.86	1.59	1.08	1.97	1.35	2.43	1.66
1⅜		1.73	1.18	2.21	1.51	2.77	1.89	3.45	2.36	4.25	2.91
1⅝		2.75	1.88	3.50	2.40	4.40	3.01	5.46	3.75	6.72	4.61
2⅛		5.73	3.92	7.29	5.00	9.14	6.27	11.40	7.79	14.00	9.59
2⅝		10.20	6.97	12.90	8.87	16.20	11.10	20.00	13.80	24.70	17.00
3⅛		16.20	11.10	20.60	14.20	25.90	17.80	32.10	22.10	39.40	27.20
3⅝		24.20	16.60	30.80	21.20	38.50	26.50	47.70	32.90	58.70	40.40
4⅛		34.20	23.50	43.40	29.90	54.30	37.40	67.30	46.50	82.60	57.10
5⅛		61.30	42.20	77.70	53.60	97.20	67.10	121.00	83.20	148.00	102.00
6⅛		98.80	68.00	125.00	86.30	157.00	108.00	194.00	134.00	237.00	165.00
Steel											
NPS	SCH										
½	80	0.16	0.11	0.20	0.14	0.25	0.17	0.30	0.21	0.37	0.26
¾	80	0.36	0.25	0.45	0.31	0.56	0.39	0.69	0.48	0.84	0.59
1	80	0.70	0.49	0.88	0.61	1.09	0.77	1.34	0.94	1.64	1.15
1¼	40	1.84	1.29	2.31	1.62	2.87	2.02	3.54	2.48	4.31	3.03
1½	40	2.77	1.94	3.48	2.44	4.32	3.03	5.30	3.73	6.47	4.55
2	40	5.35	3.75	6.72	4.72	8.33	5.86	10.30	7.20	12.50	8.78
2½	40	8.53	5.99	10.70	7.53	13.30	9.35	16.30	11.50	19.90	14.00
3	40	15.10	10.60	18.90	13.30	23.50	16.50	28.90	20.30	35.20	24.80
4	40	30.80	21.70	38.70	27.20	48.00	33.80	58.80	41.50	71.60	50.50
5	40	55.60	39.20	69.80	49.10	86.50	60.93	106.00	74.95	129.00	91.00
6	40	89.90	63.40	113.00	79.60	140.00	98.50	172.00	121.00	209.00	148.00

Δp = pressure drop due to line friction, psi per 100 ft equivalent line length
Δt = change in saturation temperature corresponding to pressure drop, °F per 100 ft

TABLE C9.5M (SI) Suction Line Capacities in Kilowatts for Refrigeration 134a (Single- or High-Stage Applications) for Pressure Drops of 0.02 and 0.01 K/m Equivalent

Nominal line size,	Saturated suction temperature, °C									
	−10		−5		0		5		10	
	Δt = 0.02 K	Δt = 0.01 K	Δt = 0.02 K	Δt = 0.01 K	Δt = 0.02 K	Δt = 0.01 K	Δt = 0.02 K	Δt = 0.01 K	Δt = 0.02 K	Δt = 0.01 K
	Δp = 159	Δp = 79.3	Δp = 185	Δp = 92.4	Δp = 212	Δp = 106	Δp = 243	Δp = 121	Δp = 278	Δp = 139
Copper O.D. mm										
12	0.42	0.28	0.52	0.35	0.63	0.43	0.76	0.51	0.91	0.62
15	0.81	0.55	0.99	0.67	1.20	0.82	1.45	0.99	1.74	1.19
18	1.40	0.96	1.73	1.18	2.09	1.43	2.53	1.72	3.03	2.07
22	2.48	1.69	3.05	2.08	3.69	2.52	4.46	3.04	5.34	3.66
28	4.91	3.36	6.03	4.13	7.31	5.01	8.81	6.02	10.60	7.24
35	9.05	6.18	11.10	7.60	13.40	9.21	16.20	11.10	19.40	13.30
42	15.00	10.30	18.40	12.60	22.30	15.30	26.90	18.40	32.10	22.10
54	30.00	20.50	36.70	25.20	44.40	30.50	53.40	36.70	63.80	44.00
67	53.40	36.70	65.40	44.90	79.00	54.40	95.00	65.40	113.00	78.30
79	82.80	56.90	101.00	69.70	122.00	84.30	147.00	101.00	176.00	122.00
105	178.00	122.00	217.00	149.00	262.00	181.00	315.00	217.00	375.00	260.00
Steel DN										
10	0.61	0.42	0.74	0.52	0.89	0.62	1.06	0.74	1.27	0.89
15	1.13	0.79	1.38	0.96	1.65	1.16	1.97	1.38	2.35	1.65
20	2.39	1.67	2.91	2.03	3.49	2.44	4.17	2.92	4.94	3.47
25	4.53	3.17	5.49	3.85	6.59	4.62	7.86	5.52	9.33	6.56
32	9.37	6.57	11.40	7.97	13.60	9.57	16.30	11.40	19.30	13.60
40	14.10	9.86	17.10	12.00	20.50	14.40	24.40	17.10	28.90	20.40
50	27.20	19.10	32.90	23.10	39.50	27.70	47.00	33.10	55.80	39.40
65	43.30	30.40	52.50	36.90	62.90	44.30	75.00	52.70	88.80	62.70
80	76.60	53.80	92.80	65.30	111.00	78.30	133.00	93.10	157.00	111.00
100	156.00	110.00	189.00	133.00	227.00	160.00	270.00	190.00	320.00	226.00

Δp = pressure drop per unit equivalent length of line, Pa/m
Δt = corresponding change in saturation temperature, K/m

TABLE C9.6 (IP) Suction Line Capacities in Tons for Refrigerant 22 (Single- or High-Stage Applications)

Line size		Saturated suction temperature, °F									
Type L copper, OD		−40		−20		0		20		40	
		Δt = 1°F Δp = 0.393	Δt = 0.5°F Δp = 0.197	Δt = 1°F Δp = 0.577	Δt = 0.5°F Δp = 0.289	Δt = 1°F Δp = 0.813	Δt = 0.5°F Δp = 0.406	Δt = 1°F Δp = 1.104	Δt = 0.5°F Δp = 0.552	Δt = 1°F Δp = 1.455	Δt = 0.5°F Δp = 0.727
½		0.07	0.05	0.12	0.08	0.18	0.12	0.27	0.19	0.40	0.27
⅝		0.13	0.09	0.22	0.15	0.34	0.23	0.52	0.35	0.75	0.51
¾		0.22	0.15	0.37	0.25	0.58	0.39	0.86	0.59	1.24	0.85
⅞		0.35	0.24	0.58	0.40	0.91	0.62	1.37	0.93	1.97	1.35
1⅛		0.72	0.49	1.19	0.81	1.86	1.27	2.77	1.90	3.99	2.74
1⅜		1.27	0.86	2.09	1.42	3.25	2.22	4.84	3.32	6.96	4.78
1⅝		2.02	1.38	3.31	2.26	5.16	3.53	7.67	5.26	11.00	7.57
2⅛		4.21	2.88	6.90	4.73	10.71	7.35	15.92	10.96	22.81	15.73
2⅝		7.48	5.13	12.23	8.39	18.97	13.04	28.19	19.40	40.38	27.84
3⅛		11.99	8.22	19.55	13.43	30.31	20.85	44.93	31.00	64.30	44.44
3⅝		17.89	12.26	29.13	20.00	45.09	31.03	66.81	46.11	95.68	66.09
4⅛		25.29	17.36	41.17	28.26	63.71	43.85	94.25	65.12	134.81	93.22
Steel											
NPS	SCH										
⅜	80	0.06	0.04	0.10	0.07	0.15	0.10	0.21	0.15	0.30	0.21
½	80	0.12	0.08	0.19	0.13	0.29	0.20	0.42	0.30	0.60	0.42
¾	80	0.27	0.18	0.43	0.30	0.65	0.46	0.95	0.67	1.35	0.95
1	80	0.52	0.36	0.84	0.59	1.28	0.89	1.87	1.31	2.64	1.86
1¼	40	1.38	0.96	2.21	1.55	3.37	2.36	4.91	3.45	6.93	4.88
1½	40	2.08	1.45	3.32	2.33	5.05	3.55	7.38	5.19	10.42	7.33
2	40	4.03	2.81	6.41	4.51	9.74	6.85	14.22	10.01	20.07	14.14
2½	40	6.43	4.49	10.23	7.19	15.56	10.93	22.65	15.95	31.99	22.53
3	40	11.38	7.97	18.11	12.74	27.47	19.34	40.10	28.23	56.52	39.79
4	40	23.24	16.30	36.98	26.02	56.12	39.49	81.73	57.53	115.24	81.21
5	40	42.04	29.50	66.73	47.05	101.16	71.27	147.36	103.82	207.59	146.38
6	40	68.04	47.86	108.14	76.15	163.77	115.21	238.29	168.07	335.71	236.70
8	40	139.48	98.06	221.17	155.78	334.94	236.21	488.05	344.19	686.71	484.74
10	40	252.38	177.75	400.53	282.05	606.74	427.75	881.59	622.51	1243.64	876.79
12	ID	403.63	284.69	639.74	451.09	969.02	683.22	1410.30	995.80	1987.29	1402.63

Δp = pressure drop due to line friction, psi per 100 ft equivalent line length
Δt = change in saturation temperature corresponding to pressure drop, °F per 100 ft

TABLE C9.6M (SI) Suction Line Capacities in Kilowatts for Refrigerant 22 (Single- or High-Stage Applications) for Pressure Drops of 0.02 and 0.01 K/m Equivalent

Nominal line size,	Saturated suction temperature, °C									
	−40		−30		−20		−5		+5	
	$\Delta t = 0.02$ $\Delta p = 97.9$	$\Delta t = 0.01$ $\Delta p = 49.0$	$\Delta t = 0.02$ $\Delta p = 138$	$\Delta t = 0.01$ $\Delta p = 69.2$	$\Delta t = 0.02$ $\Delta p = 189$	$\Delta t = 0.01$ $\Delta p = 94.6$	$\Delta t = 0.02$ $\Delta p = 286$	$\Delta t = 0.01$ $\Delta p = 143$	$\Delta t = 0.02$ $\Delta p = 366$	$\Delta t = 0.01$ $\Delta p = 183$
O.D. mm	Copper line									
12	0.21	0.14	0.34	0.23	0.51	0.34	0.87	0.59	1.20	0.82
15	0.41	0.28	0.65	0.44	0.97	0.66	1.67	1.14	2.30	1.56
18	0.72	0.49	1.13	0.76	1.70	1.15	2.91	1.98	4.00	2.73
22	1.28	0.86	2.00	1.36	3.00	2.04	5.14	3.50	7.07	4.82
28	2.54	1.72	3.97	2.70	5.95	4.06	10.16	6.95	13.98	9.56
35	4.69	3.19	7.32	4.99	10.96	7.48	18.69	12.80	25.66	17.59
42	7.82	5.32	12.19	8.32	18.20	12.46	31.03	21.27	42.59	29.21
54	15.63	10.66	24.34	16.65	36.26	24.88	61.79	42.43	84.60	58.23
67	27.94	19.11	43.48	29.76	64.79	44.48	110.05	75.68	150.80	103.80
79	43.43	29.74	67.47	46.26	100.51	69.04	170.64	117.39	233.56	161.10
105	93.43	63.99	144.76	99.47	215.39	148.34	365.08	251.92	499.16	344.89
DN	Steel line									
10	0.33	0.23	0.50	0.35	0.74	0.52	1.25	0.87	1.69	1.18
15	0.61	0.42	0.94	0.65	1.38	0.96	2.31	1.62	3.15	2.20
20	1.30	0.90	1.98	1.38	2.92	2.04	4.87	3.42	6.63	4.65
25	2.46	1.71	3.76	2.62	5.52	3.86	9.22	6.47	12.52	8.79
32	5.11	3.56	7.79	5.45	11.42	8.01	19.06	13.38	25.88	18.20
40	7.68	5.36	11.70	8.19	17.16	12.02	28.60	20.10	38.89	27.35
50	14.85	10.39	22.65	14.86	33.17	23.27	55.18	38.83	74.92	52.77
65	23.74	16.58	36.15	25.30	52.84	37.13	87.91	61.89	119.37	84.05
80	42.02	29.43	63.95	44.84	93.51	65.68	155.62	109.54	211.33	148.77
100	85.84	60.16	130.57	91.69	190.95	134.08	317.17	223.47	430.77	303.17
125	155.21	108.97	235.58	165.78	344.66	242.47	572.50	403.23	776.67	547.16
150	251.47	176.49	381.78	268.72	557.25	391.95	925.72	652.73	1255.93	885.79
200	515.37	362.01	781.63	550.49	1141.07	803.41	1895.86	1336.79	2572.39	1813.97
250	933.07	656.12	1413.53	996.65	2063.66	1454.75	3429.24	2417.91	4646.48	3280.83
300	1494.35	1050.57	2264.54	1593.85	3305.39	2330.50	5477.74	3867.63	7433.20	5248.20

TABLE C9.7 (IP) Suction, Discharge, and Liquid Line Capacities in Tons for Ammonia (Single- or High-Stage Applications)

Steel line size		Suction lines (Δt = 1°F/100 ft)					Discharge lines	Steel line size		Liquid lines	
		Saturated suction temperature, °F					Δt = 1°F				
		−40	−20	0	20	40				Velocity = 100 fpm	Δp = 2.0 psi
NPS	SCH	Δp = 0.31	Δp = 0.49	Δp = 0.73	Δp = 1.06	Δp = 1.46	Δp = 2.95	IPS	SCH		Δt = 0.7°F
⅜	80	—	—	—	—	—	—	⅜	80	8.6	12.1
½	80	—	—	—	—	—	3.1	½	80	14.2	24.0
¾	80	—	—	—	2.6	3.8	7.1	¾	80	26.3	54.2
1	80	—	2.1	3.4	5.2	7.6	13.9	1	80	43.8	106.4
1¼	40	3.2	5.6	8.9	13.6	19.9	36.5	1¼	80	78.1	228.6
1½	40	4.9	8.4	13.4	20.5	29.9	54.8	1½	80	107.5	349.2
2	40	9.5	16.2	26.0	39.6	57.8	105.7	2	40	204.2	811.4
2½	40	15.3	25.9	41.5	63.2	92.1	168.5	2½	40	291.1	1292.6
3	40	27.1	46.1	73.5	111.9	163.0	297.6	3	40	449.6	2287.8
4	40	55.7	94.2	150.1	228.7	333.0	606.2	4	40	774.7	4662.1
5	40	101.1	170.4	271.1	412.4	600.9	1095.2	5	40	—	—
6	40	164.0	276.4	439.2	667.5	971.6	1771.2	6	40	—	—
8	40	337.2	566.8	901.1	1366.6	1989.4	3623.0	8	40	—	—
10	40	611.6	1027.2	1634.3	2474.5	3598.0	—	10	40	—	—
12	ID	981.6	1644.5	2612.4	3963.5	5764.6	—	12	ID	—	—

Notes:

1. Table capacities are in tons of refrigeration.
   Δp = pressure drop due to line friction, psi per 100 ft of equivalent line length
   Δt = corresponding change in saturation temperature, °F per 100 ft
2. Line capacity for other saturation temperatures Δt and equivalent lengths L_e

$$\text{Line capacity} = \text{Table capacity}\left(\frac{\text{Table } L_e}{\text{Actual } L_e} \times \frac{\text{Actual } \Delta t}{\text{Table } \Delta t}\right)^{0.51}$$

3. Saturation temperature Δt for other capacities and equivalent lengths L_e

$$\Delta t = \text{Table } \Delta t \left(\frac{\text{Actual } L_e}{\text{Table } L_e}\right)\left(\frac{\text{Actual capacity}}{\text{Table capacity}}\right)^{1.96}$$

4. Values in the table are based on 90°F condensing temperature. Multiply table capacities by the following factors for other condensing temperatures.

Condensing temperature, °F	Suction lines	Discharge lines
70	1.05	0.78
80	1.02	0.89
90	1.00	1.00
100	0.98	1.11

5. Discharge and liquid line capacities are based on 20°F suction. Evaporator temperature is 0°F. The capacity is affected less than 3% when applied from −40 to +40°F extremes.

TABLE C9.7M (SI) Suction, Discharge, and Liquid Line Capacities for Ammonia (Single- or High-Stage Applications)

Steel line size	Suction lines $\Delta t = 0.02$ K/m					Discharge lines $\Delta t = 0.02$ K/m, $\Delta p = 684.0$ Pa/m			Steel line size		
	Saturated suction temperature, °C										
Nominal DN	−40 $\Delta p = 76.9$	−30 $\Delta p = 116.3$	−20 $\Delta p = 168.8$	−5 $\Delta p = 276.6$	5 $\Delta p = 370.5$	−40	−20	+5	Nominal mm	velocity = 0.5 m/s	$\Delta t = 0.013$ K/100 m $\Delta p = 450$ Pa/m
10	0.8	1.2	1.9	3.5	4.9	8.0	8.3	8.5	10	3.9	63.8
15	1.4	2.3	3.6	6.5	9.1	14.9	15.3	15.7	15	63.2	118.4
20	3.0	4.9	7.7	13.7	19.3	31.4	32.3	33.2	20	110.9	250.2
25	5.8	9.4	14.6	25.9	36.4	59.4	61.0	62.6	25	179.4	473.4
32	12.1	19.6	30.2	53.7	75.4	122.7	126.0	129.4	32	311.0	978.0
40	18.2	29.5	45.5	80.6	113.3	184.4	189.4	194.5	40	423.4	1469.4
50	35.4	57.2	88.1	155.7	218.6	355.2	364.9	374.7	50	697.8	2840.5
65	56.7	91.6	140.6	248.6	348.9	565.9	581.4	597.0	65	994.8	4524.8
80	101.0	162.4	249.0	439.8	616.9	1001.9	1029.3	1056.9	80	1536.3	8008.8
100	206.9	332.6	509.2	897.8	1258.6	2042.2	2098.2	2154.3	—	—	—
125	375.2	601.8	902.6	1622.0	2271.4	3682.1	3783.0	3884.2	—	—	—
150	608.7	975.6	1491.4	2625.4	3672.5	5954.2	6117.4	6281.0	—	—	—
200	1252.3	2003.3	3056.0	5382.5	7530.4	12195.3	12529.7	12864.8	—	—	—
250	2271.0	3625.9	5539.9	9733.7	13619.6	22028.2	22632.2	23237.5	—	—	—
300	3640.5	5813.5	8873.4	15568.9	21787.1	35239.7	36206.0	37174.3	—	—	—

Notes:

1. Table capacities are in kilowatts of refrigeration resulting in a line friction loss per unit equivalent pipe length, with corresponding change in saturation temperature, where

   Δp = pressure drop due to line friction, Pa/m

   Δt = change in saturation temperature, K/m

2. Line capacity for other saturation temperatures Δt and equivalent lengths L_e

$$\text{Line capacity} = \text{Table capacity}\left(\frac{\text{Table } L_e}{\text{Actual } L_e} \times \frac{\text{Actual } \Delta t}{\text{Table } \Delta t}\right)^{0.51}$$

3. Saturation temperature Δt for other capacities and equivalent lengths L_e

$$\Delta t = \text{Table } \Delta t \, \frac{\text{Actual } L_e}{\text{Table } L_e}\left(\frac{\text{Actual capacity}}{\text{Table capacity}}\right)^{1.96}$$

4. Values in the table are based on 30°C condensing temperature. Multiply table capacities by the following factors for other condensing temperatures:

Condensing temperature, °C	Suction lines	Discharge lines
20	1.04	0.86
30	1.00	1.00
40	0.96	1.24
50	0.91	1.43

5. Discharge and liquid line capacities are based on −5°C suction.

TABLE C9.8 (IP) Suction, Discharge, and Liquid Line Capacities in Tons for Refrigerant 134a (Single- or High-Stage Applications)

Line size	Suction lines (Δt = 2°F/100 ft)					Discharge lines (Δt = 1°F, Δp = 2.2 psi/100 ft)			Line size	Liquid lines	
	Saturated suction temperature, °F					Saturated suction temperature, °F				See notes a and b	
	0	10	20	30	40						
	Corresponding Δp, psi/100 ft										
Type L copper OD	1.00	1.19	1.41	1.66	1.93	0	20	40	Type L Copper, OD	Vel. = 100 fpm	Δt = 1°F Δp = 2.2
½	0.14	0.18	0.23	0.29	0.35	0.54	0.57	0.59	½	2.13	2.79
⅝	0.27	0.34	0.43	0.54	0.66	1.01	1.07	1.12	⅝	3.42	5.27
⅞	0.71	0.91	1.14	1.42	1.75	2.67	2.81	2.94	⅞	7.09	14.00
1⅛	1.45	1.84	2.32	2.88	3.54	5.40	5.68	5.95	1⅛	12.10	28.40
1⅜	2.53	3.22	4.04	5.02	6.17	9.42	9.91	10.40	1⅜	18.40	50.00
1⅝	4.02	5.10	6.39	7.94	9.77	14.90	15.70	16.40	1⅝	26.10	78.60
2⅛	8.34	10.60	13.30	16.50	20.20	30.80	32.40	34.00	2⅛	45.30	163.00
2⅝	14.80	18.80	23.50	29.10	35.80	54.40	57.20	59.90	2⅝	69.90	290.00
3⅛	23.70	30.00	37.50	46.40	57.10	86.70	91.20	95.50	3⅛	100.00	462.00
3⅝	35.10	44.60	55.80	69.10	84.80	129.00	135.00	142.00	3⅝	135.00	688.00
4⅛	49.60	62.90	78.70	97.40	119.43	181.00	191.00	200.00	4⅛	175.00	971.00
5⅛	88.90	113.00	141.00	174.00	213.00	323.00	340.00	356.00	—	—	—
6⅛	143.00	181.00	226.00	280.00	342.00	518.00	545.00	571.00	—	—	—

TABLE C9.8 (IP) Suction, Discharge, and Liquid Line Capacities in Tons for Refrigerant 134a (Single- or High-Stage Applications) *(Continued)*

Line size		Suction lines (Δt = 2°F/100 ft)					Discharge lines (Δt = 1°F, Δp = 2.2 psi/100 ft)			Line size		Liquid lines	
		Saturated suction temperature, °F					Saturated suction temperature, °F					See notes a and b	
		0	10	20	30	40							
		Corresponding Δp, psi/100 ft											
OD		1.00	1.19	1.41	1.66	1.93	0	20	40	OD		Vel. = 100 fpm	Δt = 1°F Δp = 2.2
Steel										Steel			
NPS	SCH									NPS	SCH		
½	80	0.22	0.28	0.35	0.43	0.53	0.79	0.84	0.88	½	80	3.43	4.38
¾	80	0.51	0.64	0.79	0.98	1.19	1.79	1.88	1.97	¾	80	6.34	9.91
1	80	1.00	1.25	1.56	1.92	2.33	3.51	3.69	3.86	1	80	10.50	19.50
1¼	40	2.62	3.30	4.09	5.03	6.12	9.20	9.68	10.10	1¼	80	18.80	41.80
1½	40	3.94	4.95	6.14	7.54	9.18	13.80	14.50	15.20	1½	80	25.90	63.70
2	40	7.60	9.56	11.90	14.60	17.70	26.60	28.00	29.30	2	40	49.20	148.00
2½	40	12.10	15.20	18.90	23.10	28.20	42.40	44.60	46.70	2½	40	70.10	236.00
3	40	21.40	26.90	33.40	41.00	49.80	75.00	78.80	82.50	3	40	108.00	419.00
4	40	43.80	54.90	68.00	83.50	101.60	153.00	160.00	168.00	4	40	187.00	853.00

Notes:

1. Table capacities are in tons of refrigeration.

   Δp = pressure drop due to line friction, psi per 100 ft of equivalent line length
   Δt = corresponding change in saturation temperature, °F per 100 ft

2. Line capacity for other saturation temperatures Δt and equivalent lengths L_e

$$\text{Line capacity} = \text{Table capacity}\left(\frac{\text{Table } L_e}{\text{Actual } L_e}\times\frac{\text{Actual }\Delta t}{\text{Table }\Delta t}\right)^{0.541} \text{(0.51 for steel)}$$

3. Saturation temperature Δt for other capacities and equivalent lengths L_e

$$\Delta t = \text{Table }\Delta t\left(\frac{\text{Actual } L_e}{\text{Table } L_e}\right)\left(\frac{\text{Actual capacity}}{\text{Table capacity}}\right)^{1.85} \text{(1.96 for steel)}$$

4. Values in the table are based on 105°F condensing temperature. Multiply table capacities by the following factors for other condensing temperatures.

Condensing temperature, °F	Suction line	Discharge line
80	1.158	0.804
90	1.095	0.882
100	1.032	0.961
110	0.968	1.026
120	0.902	1.078
130	0.834	1.156

---

[a] The sizing shown is recommended where any gas generated in the receiver must return up the condensate line to the condenser without restricting condensate flow. Water-cooled condensers, where the receiver ambient temperature may be higher than the refrigerant condensing temperature, fall into this category.

[b] The line pressure drop Δp is conservative; if subcooling is substantial or the line is short, a smaller size line may be used. Applications with very little subcooling or very long lines may require a larger line.

TABLE C9.8M (SI) Suction, Discharge, and Liquid Line Capacities in Kilowatts for Refrigerant 134a (Single- or High-Stage Applications)

Nominal line size, Type L copper O.D. mm	Suction lines ($\Delta t = 0.04$ K/m)					Discharge lines ($\Delta t = 0.02$ K/m, $\Delta p = 538$ Pa/m)			Liquid lines	
	Saturated suction temperature at Corresponding Δp, Pa/m					Saturated suction temperature			See notes a and b	
	−10°C $\Delta p = 318$	−5°C $\Delta p = 368$	0°C $\Delta p = 425$	5°C $\Delta p = 487$	10°C $\Delta p = 555$	−10°C	0°C	10°C	Vel. = 0.5 m/s	$\Delta t = 0.02$ K/m $\Delta p = 538$ Pa/m
12	0.62	0.76	0.92	1.11	1.33	1.69	1.77	1.84	6.51	8.50
15	1.18	1.45	1.76	2.12	2.54	3.23	3.37	3.51	10.60	16.30
18	2.06	2.52	3.60	3.69	4.42	5.61	5.85	6.09	16.00	28.40
22	3.64	4.45	5.40	6.50	7.77	9.87	10.30	10.70	24.50	50.10
28	7.19	8.80	10.70	12.80	15.30	19.50	20.30	21.10	41.00	99.50
35	13.20	16.10	19.50	23.50	28.10	35.60	37.20	38.70	64.90	183.00
42	21.90	26.80	32.40	39.00	46.50	59.00	61.60	64.10	95.20	304.00
54	43.60	53.20	64.40	77.30	92.20	117.00	122.00	127.00	160.00	605.00
67	77.70	94.60	115.00	138.00	164.00	208.00	217.00	226.00	248.00	1080.00
79	120.00	147.00	177.00	213.00	253.00	321.00	335.00	349.00	346.00	1670.00
105	257.00	313.00	379.00	454.00	541.00	686.00	715.00	744.00	618.00	3580.00

TABLE C9.8M (SI) Suction, Discharge, and Liquid Line Capacities in Kilowatts for Refrigerant 134a (Single- or High-Stage Applications) *(Continued)*

Nominal line size,	Suction lines ($\Delta t = 0.04$ K/m)					Discharge lines ($\Delta t = 0.02$ K/m, $\Delta p = 538$ Pa/m)			Liquid lines	
	Saturated suction temperature at Corresponding Δp, Pa/m					Saturated suction temperature			See notes a and b	
O.D. mm	−10°C $\Delta p = 318$	−5°C $\Delta p = 368$	0°C $\Delta p = 425$	5°C $\Delta p = 487$	10°C $\Delta p = 555$	−10°C	0°C	10°C	Vel. = 0.5 m/s	$\Delta t = 0.02$ K/m $\Delta p = 538$ Pa/m
Steel NPS										
10	0.87	1.06	1.27	1.52	1.80	2.28	2.38	2.47	9.81	12.30
15	1.62	1.96	2.36	2.81	3.34	4.22	4.40	4.58	15.60	22.80
20	3.41	4.13	4.97	5.93	7.02	8.88	9.26	9.64	27.40	48.20
25	6.45	7.81	9.37	11.20	13.30	16.70	17.50	18.20	44.40	91.00
32	13.30	16.10	19.40	23.10	27.40	34.60	36.10	37.50	76.90	188.00
40	20.00	24.20	29.10	34.60	41.00	51.90	54.10	56.30	105.00	283.00
50	38.60	46.70	56.00	66.80	79.10	100.00	104.00	108.00	173.00	546.00
65	61.50	74.30	89.30	106.00	126.00	159.00	166.00	173.00	246.00	871.00
80	109.00	131.00	158.00	288.00	223.00	281.00	294.00	306.00	380.00	1540.00
100	222.00	268.00	322.00	383.00	454.00	573.00	598.00	622.00	655.00	3140.00

Notes:

1. Table capacities are in kilowatts of refrigeration.

Δp = pressure drop per equivalent length of line, Pa/m
Δt = corresponding change in saturation temperature, K/m

2. Line capacity for other saturation temperatures Δt and equivalent lengths L_e

$$\text{Line capacity} = \text{Table capacity}\left(\frac{\text{Table } L_e}{\text{Actual } L_e} \times \frac{\text{Actual } \Delta t}{\text{Table } \Delta t}\right)^{0.541} \text{(0.51 for steel)}$$

3. Saturation temperature Δt for other capacities and equivalent lengths L_e

$$\Delta t = \text{Table } \Delta t \left(\frac{\text{Actual } L_e}{\text{Table } L_e}\right)\left(\frac{\text{Actual capacity}}{\text{Table capacity}}\right)^{1.85} \text{(1.96 for steel)}$$

4. Values in the table are based on 40°C condensing temperature. Multiply table capacities by the following factors for other condensing temperatures.

Condensing temperature, °C	Suction line	Discharge line
20	1.239	0.682
30	1.120	0.856
40	1.0	1.0
50	0.888	1.110

---

[a] The sizing shown is recommended where any gas generated in the receiver must return up the condensate line to the condenser without restricting condensate flow. Water-cooled condensers, where the receiver ambient temperature may be higher than the refrigerant condensing temperature, fall in this category.

[b] The line pressure drop Δp is conservative; if subcooling is substantial or the line is short, a smaller size line may be used. Applications with very little subcooling or very long lines may require a larger line.

TABLE C9.9 (IP) Suction, Discharge, and Liquid Line Capacities in Tons for Refrigerant 22 (Single- or High-Stage Applications)

Line size	Suction lines (Δt = 2°F/100 ft)					Discharge lines (Δt = 1°F, Δp = 3.05 psi)		Line size	Liquid lines	
	Saturated suction temperature, °F					Saturated suction temperature, °F			See notes a and b	
	−40	−20	0	20	40					
Type L copper OD	Corresponding Δp, psi/100 ft							Type L Copper, OD		
	0.79	1.15	1.6	2.22	2.91	−40	40		Vel. = 100 fpm	Δt = 1°F Δp = 3.05
½	—	—	—	0.40	0.6	0.75	0.85	½	2.3	3.6
⅝	—	0.32	0.51	0.76	1.1	1.4	1.6	⅝	3.7	6.7
⅞	0.52	0.86	1.3	2.0	2.9	3.7	4.2	⅞	7.8	18.2
1⅛	1.1	1.7	2.7	4.0	5.8	7.5	8.5	1⅛	13.2	37.0
1⅜	1.9	3.1	4.7	7.0	10.1	13.1	14.8	1⅜	20.2	64.7
1⅝	3.0	4.8	7.5	11.1	16.0	20.7	23.4	1⅝	28.5	102.5
2⅛	6.2	10.0	15.6	23.1	33.1	42.8	48.5	2⅛	49.6	213.0
2⅝	10.9	17.8	27.5	40.8	58.3	75.4	85.4	2⅝	76.5	376.9
3⅛	17.5	28.4	44.0	65.0	92.9	120.2	136.2	3⅛	109.2	601.5
3⅝	26.0	42.3	65.4	96.6	137.8	178.4	202.1	3⅝	147.8	895.7
4⅛	36.8	59.6	92.2	136.3	194.3	251.1	284.4	4⅛	192.1	1263.2

TABLE C9.9 (IP) Suction, Discharge, and Liquid Line Capacities in Tons for Refrigerant 22 (Single- or High-Stage Applications) *(Continued)*

Line size		Suction lines (Δt = 2°F/100 ft)					Discharge lines (Δt = 1°F, Δp = 3.05 psi)		Line size		Liquid lines	
		Saturated suction temperature, °F					Saturated suction temperature, °F				See notes a and b	
		−40	−20	0	20	40						
		Corresponding Δp, psi/100 ft									Vel. = 100 fpm	Δt = 1°F Δp = 3.05
OD		0.79	1.15	1.6	2.22	2.91	−40	40	OD			
Steel									Steel			
NPS	SCH								IPS	SCH		
½	40	—	0.38	0.58	0.85	1.2	1.5	1.7	½	80	3.8	5.7
¾	40	0.50	0.8	1.2	1.8	2.5	3.3	3.7	¾	80	6.9	12.8
1	40	0.95	1.5	2.3	3.4	4.8	6.1	6.9	1	80	11.5	25.2
1¼	40	2.0	3.2	4.8	7.0	9.9	12.6	14.3	1¼	80	20.6	54.1
1½	40	3.0	4.7	7.2	10.5	14.8	19.0	21.5	1½	80	28.3	82.6
2	40	5.7	9.1	13.9	20.2	28.5	36.6	41.4	2	40	53.8	192.0
2½	40	9.2	14.6	22.1	32.2	45.4	58.1	65.9	2½	40	76.7	305.8
3	40	16.2	25.7	39.0	56.8	80.1	102.8	116.4	3	40	118.5	540.3
4	40	33.1	52.5	79.5	115.9	163.2	209.5	237.3	4	40	204.2	1101.2

Notes:

1. Table capacities are in tons of refrigeration.

   Δp = pressure drop due to line friction, psi per 100 ft of equivalent line length
   Δt = corresponding change in saturation temperature, °F per 100 ft

2. Line capacity for other saturation temperatures Δt and equivalent lengths L_e

$$\text{Line capacity} = \text{Table capacity}\left(\frac{\text{Table } L_e}{\text{Actual } L_e} \times \frac{\text{Actual } \Delta t}{\text{Table } \Delta t}\right)^{0.541} \text{ (0.51 for steel)}$$

3. Saturation temperature Δt for other capacities and equivalent lengths L_e

$$\Delta t = \text{Table } \Delta t \left(\frac{\text{Actual } L_e}{\text{Table } L_e}\right)\left(\frac{\text{Actual capacity}}{\text{Table capacity}}\right)^{1.85} \text{ (1.96 for steel)}$$

4. Values in the table are based on 105°F condensing temperature. Multiply table capacities by the following factors for other condensing temperatures.

Condensing temperature, °F	Suction line	Discharge line
80	1.11	0.79
90	1.07	0.88
100	1.03	0.95
110	0.97	1.04
120	0.90	1.10
130	0.86	1.18
140	0.80	1.26

---

[a] The sizing shown is recommended where any gas generated in the receiver must return up the condensate line to the condenser without restricting condensate flow. Water-cooled condensers, where the receiver ambient temperature may be higher than the refrigerant condensing temperature, fall into this category.

[b] The line pressure drop Δp is conservative; if subcooling is substantial or the line is short, a smaller size line may be used. Applications with very little subcooling or very long lines may require a larger line.

TABLE C9.9M (SI) Suction, Discharge, and Liquid Line Capacities in Kilowatts for Refrigerant 22 (Single- or High-Stage Applications)

Nominal line size, mm	Suction lines ($\Delta t = 0.04$ K/m)					Discharge lines ($\Delta t = 0.02$ K/m, $\Delta p = 74.90$)			Liquid lines	
	Saturated suction temperature, °C					Saturated suction temp., °C			Velocity = 0.5 m/s[a]	$\Delta t = 0.02$ K/m $\Delta p = 74.9$ Pa/m
	−40	−30	−20	−5	+5	−40	−20	+5		
	Corresponding Δp, Pa/m									
	196	277	378	572	731					
O.D.	Copper line									
12	0.32	0.50	0.75	1.28	1.76	2.30	2.44	2.60	7.08	11.24
15	0.61	0.95	1.43	2.45	3.37	4.37	4.65	4.95	11.49	21.54
18	1.06	1.66	2.49	4.26	5.85	7.59	8.06	8.59	17.41	37.49
22	1.88	2.93	4.39	7.51	10.31	13.32	14.15	15.07	26.66	66.18
28	3.73	5.82	8.71	14.83	20.34	26.24	27.89	29.70	44.57	131.0
35	6.87	10.70	15.99	27.22	37.31	48.03	51.05	54.37	70.52	240.07
42	11.44	17.80	26.56	45.17	61.84	79.50	84.52	90.00	103.4	399.3
54	22.81	35.49	52.81	89.69	122.7	157.3	167.2	178.1	174.1	794.2
67	40.81	63.34	94.08	159.5	218.3	279.4	297.0	316.3	269.9	1415.0
79	63.34	98.13	145.9	247.2	337.9	431.3	458.5	488.2	376.5	2190.9
105	136.0	210.3	312.2	527.8	721.9	919.7	977.6	1041.0	672.0	4697.0

TABLE C9.9M (SI) Suction, Discharge, and Liquid Line Capacities in Kilowatts for Refrigerant 22 (Single- or High-Stage Applications) *(Continued)*

Nominal line size, mm	Suction lines (Δt = 0.04 K/m)					Discharge lines (Δt = 0.02 K/m, Δp = 74.90)			Liquid lines	
	Saturated suction temperature, °C					Saturated suction temp., °C				
	−40	−30	−20	−5	+5					
	Corresponding Δp, Pa/m								Velocity = 0.5 m/s[a]	Δt = 0.02 K/m Δp = 74.9 Pa/m
	196	277	378	572	731	−40	−20	+5		
NPS	Steel line									
10	0.47	0.72	1.06	1.78	2.42	3.04	3.23	3.44	10.66	15.96
15	0.88	1.35	1.98	3.30	4.48	5.62	5.97	6.36	16.98	29.62
20	1.86	2.84	4.17	6.95	9.44	11.80	12.55	13.36	29.79	62.55
25	3.52	5.37	7.87	13.11	17.82	22.29	23.70	25.24	48.19	118.2
32	7.31	11.12	16.27	27.11	36.79	46.04	48.94	52.11	83.56	244.4
40	10.98	16.71	24.45	40.67	55.21	68.96	73.31	78.07	113.7	366.6
50	21.21	32.23	47.19	78.51	106.4	132.9	141.3	150.5	187.5	707.5
65	33.84	51.44	75.19	124.8	169.5	211.4	224.7	239.3	267.3	1127.3
80	59.88	90.95	132.8	220.8	299.5	373.6	397.1	422.9	412.7	1991.3
100	122.3	185.6	270.7	450.1	610.6	761.7	809.7	862.2	711.2	4063.2

Notes:

1. Table capacities are in kilowatts of refrigeration.

Δp = pressure drop per unit equivalent length of line, Pa/m
Δt = corresponding change in saturation temperature, K/m

2. Line capacity for other saturation temperatures Δt and equivalent lengths L_e

$$\text{Line capacity} = \text{Table capacity}\left(\frac{\text{Table } L_e}{\text{Actual } L_e} \times \frac{\text{Actual } \Delta t}{\text{Table } \Delta t}\right)^{0.541} \text{ (0.51 for steel)}$$

3. Saturation temperature Δt for other capacities and equivalent lengths L_e

$$\Delta t = \text{Table } \Delta t\left(\frac{\text{Actual } L_e}{\text{Table } L_e}\right)\left(\frac{\text{Actual capacity}}{\text{Table capacity}}\right)^{1.85} \text{ (1.96 for steel)}$$

4. Values in the table are based on 40°C condensing temperature. Multiply table capacities by the following factors for other condensing temperatures.

Condensing temp., °C	Suction line	Discharge line
20	1.18	0.80
30	1.10	0.88
40	1.00	1.00
50	0.91	1.11

---

[a] The sizing shown is recommended where any gas generated in the receiver must return up the condensate line to the condenser without restricting condensate flow. Water-cooled condensers, where the receiver ambient temperature may be higher than the refrigerant condensing temperature, fall in this category.

[b] The line pressure drop Δp is conservative; if subcooling is substantial or the line is short, a smaller size line may be used. Applications with very little subcooling or very long lines may require a larger line.

Discharge Lines

In Figure C9.1*a*, the condenser pressure between points 4 and 5 is established by the temperature of the cooling medium. A pressure loss in the discharge line, shown between points 3 and 4, increases the pressure ratio in the compressor, shown between points 2 and 3. With higher discharge pressures, the compressor must pump against a higher pressure differential. This increases the power required, reduces the volumetric efficiency, and reduces the capacity of the system. Similarly as with suction lines, the sizing of oil return lines for vertical risers with halocarbon refrigerants is discussed later in connection with Table C9.14 for discharge (hot gas) risers.

It is desirable to not exceed 2.0°F (1.1°C) equivalent loss in the discharge line. Greater equivalent pressure drops are tolerated in large systems. The discharge lines are listed for capacities at 1°F per 100 feet (0.02 K/m) in Tables C9.7, C9.8, and C9.9*a*. The information in the notes is useful in adjusting the line capacities and pressure drops to other conditions.

Liquid Lines

When a system is equipped with a refrigerant receiver, the liquid line entering the receiver is usually sized generously to assure free flow from the condenser. An allowable velocity of 100 ft/min (0.5 m/s) is typical. However, Table C9.15 provides a rational sizing of condenser drain lines when the line also provides equalization between the receiver and condenser. Velocities of 150 percent of Table C9.15 are used when a separate equalizing line, from the top of the receiver to the condenser inlet, allows the condenser drain line to run full of liquid.

Piping for condensers is a complex subject, requiring consideration of pressure drop, trapping of individual circuits, subcooling of liquid, provision for purging of air, and accommodation of temperature differences between the receiver and the condensers, among other issues. A single condenser coil can be connected to the receiver without an equalizer, and with no liquid head *H*, provided the drain line is sized in accord with Table C9.15 capacities so as to allow vapor flow from the receiver back to the condenser.

Multiple condensers can be connected in series, but are usually connected as shown in Fig. C9.4. This parallel arrangement requires that the condenser coils be of equal size, that the units operate together, and that the receiver be located in an ambient temperature that is equal to or lower than the inlet air temperature to the condenser. Some liquid subcooling occurs, as the liquid tends to hang up in the lower tubes. The amount of liquid head *H* under these restraints is only that which will induce flow. If the coil sizes are unequal or do not always operate together, or if the receiver is not located such that it is below the ambient temperature of the inlet air to the condenser, additional height *H* is needed to make up for differences in coil pressure drops at full load, or to overcome the pressure equivalent of the temperature difference between the receiver and the condenser.

Two methods of piping parallel evaporative condensers are illustrated in Figs. C9.5 and C9.6. Both methods require equalizer lines from the receiver to the condenser inlet piping. When adequate equalizer lines are used, the drain lines can be sized for 150 percent of the flow suggested in Table C9.15. One advantage of the surge-type hookup in Fig. C9.5 is that subcooling of liquid accomplished in the condenser is delivered directly to the liquid line feeding the evaporators. This can be a measurable increase in efficiency, since the heating of liquid in a warm receiver

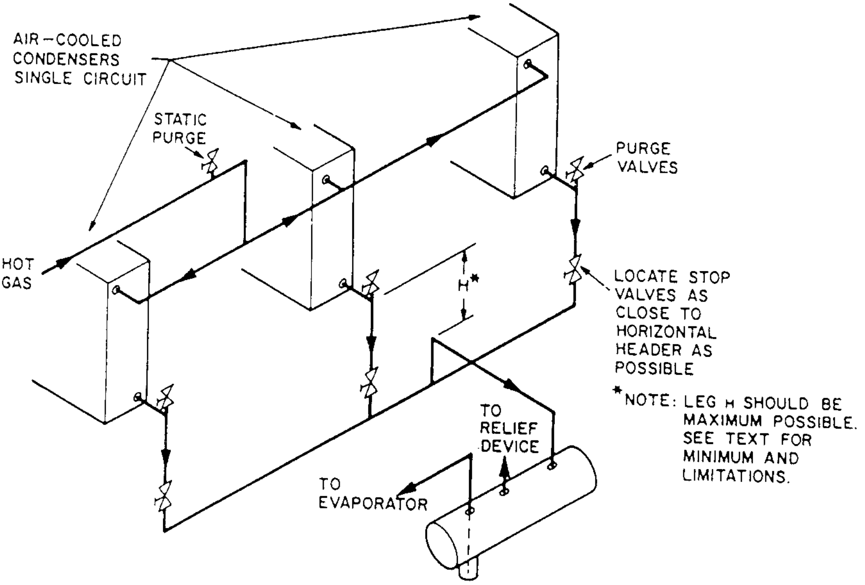
AIR-COOLED CONDENSERS SINGLE CIRCUIT
STATIC PURGE
PURGE VALVES
HOT GAS
H*
LOCATE STOP VALVES AS CLOSE TO HORIZONTAL HEADER AS POSSIBLE
*NOTE: LEG H SHOULD BE MAXIMUM POSSIBLE. SEE TEXT FOR MINIMUM AND LIMITATIONS.
TO RELIEF DEVICE
TO EVAPORATOR

FIGURE C9.4 Multiple air-cooled condensers.

is bypassed. Another feature of the surge-type arrangement is that the individual drop legs are isolated from each other by the liquid trapped at the liquid level in the receiver. Also, as the liquid rises in the drain leg to accomodate increased load and reduced pressure at the coil outlet, the receiver can usually provide plenty of liquid to fill the individual drop legs. When coils are not of equal size or when some condensers may be shut off, the static pressure of the liquid height in the drains of the working coils equalizes the pressure drop across all of the coils and provides individual pumping force to drain each condenser coil. With through-type receivers, shown in Fig. C9.6, the horizontal portion of the drain line should be limited to the flow in Table C9.15, as the liquid volume in the horizontal line should provide for filling the individual drop legs of the working coils. The liquid head *h* in either case needs to be equal to the differences in pressure drops in the parallel coils under all conditions of load. Typical height *h* with ammonia is 4 to 6 ft (1200 to 1800 mm). Typical height *h* with halocarbons is 8 ft (2400 mm).

The design constraint on liquid line sizes between points 5 and 6 in Fig. C9.1*a*, when the liquid is near to saturation or at the bubble point, is that too much pressure drop will result in liquid flashing to vapor. The object is to deliver liquid to the expansion valve. Excessive pressure drop in high-pressure liquid lines causes formation of vapor bubbles or *flash gas*. This flash gas can severely erode the valve seat or needle in an expansion valve. Also, since vapor occupies a much greater volume than liquid, the remaining liquid will be forced along the pipe at a much higher velocity. The increased velocity causes a greater pressure drop, which also restricts the mass flow. A rise in elevation of the line, or the pressure drop due to pipe friction, may lower the pressure below the *bubble point*. In some cases, a means of cooling the liquid may be necessary to avoid forming flash gas. The liquid cooling can be obtained in an extra circuit in the condenser, or may be provided with

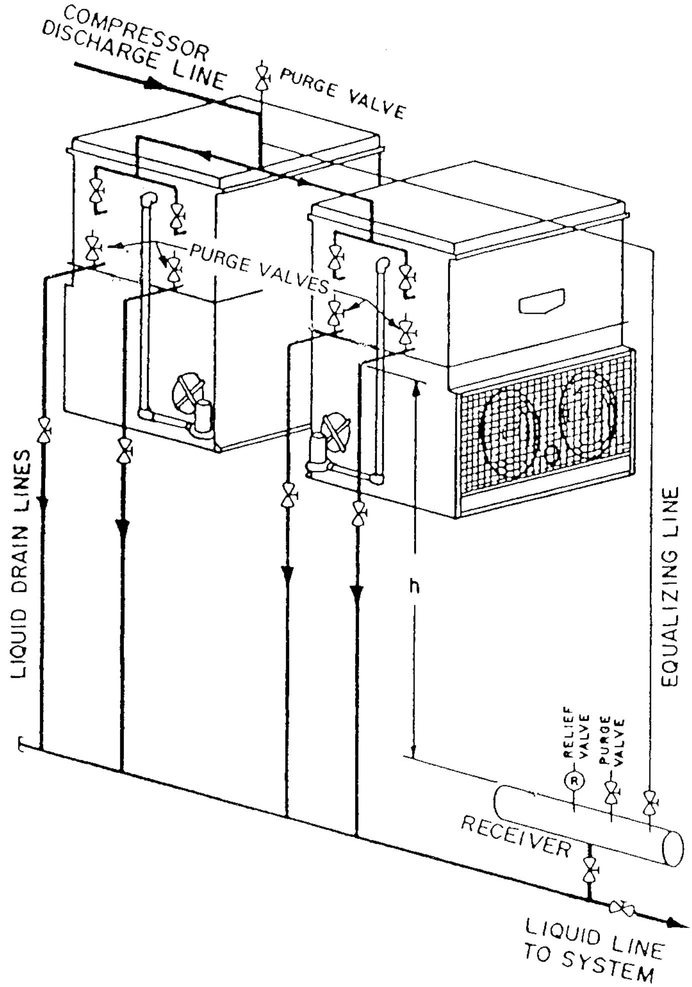
COMPRESSOR DISCHARGE LINE
PURGE VALVE
PURGE VALVES
LIQUID DRAIN LINES
h
EQUALIZING LINE
RELIEF VALVE
PURGE VALVE
R
RECEIVER
LIQUID LINE TO SYSTEM

FIGURE C9.5 Piping for parallel condensers with surge-type receiver.

suction/liquid heat exchangers or separately refrigerated liquid subcooling heat exchangers. In condenser arrangements similar to Fig. C9.4, there is some liquid subcooling accomplished in the bottom of the condensers. However, in equalized condenser arrangements as shown in Fig. C9.5, there is little or no liquid subcooling. For receivers located above evaporators, there is little concern about liquid flashing because the liquid gains in static pressure as it flows downward, which provides effective subcooling. For evaporators located above and remote from liquid receivers, the pressure loss in the liquid line must be kept to a very low amount. Alternatively, the liquid may be delivered with pumps as is common in many large piping systems. In Tables C9.7, C9.8, and C9.9, the listed capacities of large liquid lines suffers some overstatement compared to recommended capacities, while the listed

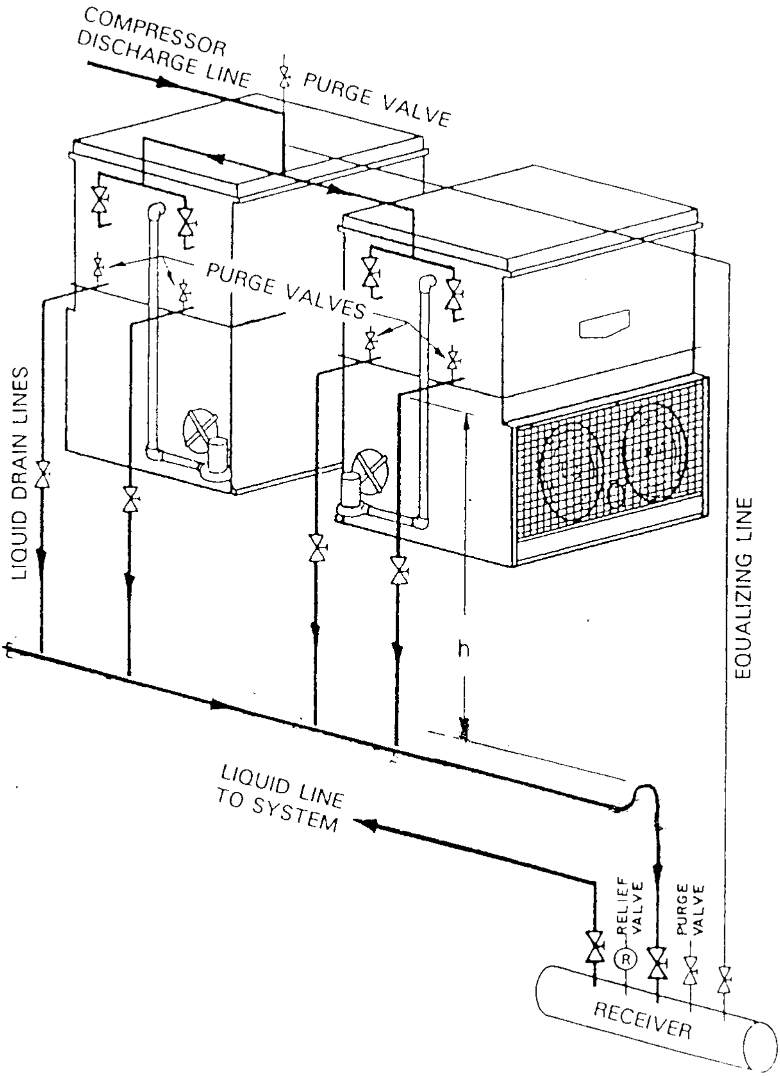
COMPRESSOR
DISCHARGE LINE
PURGE VALVE
PURGE VALVES
LIQUID DRAIN LINES
EQUALIZING LINE
h
LIQUID LINE
TO SYSTEM
RELIEF VALVE
R
PURGE VALVE
RECEIVER

FIGURE C9.6 Piping for parallel condensers with top inlet receiver.

capacities of smaller lines are understated. As a guide for selecting the size of high-pressure liquid lines, the velocity pressure in one velocity head for the natural refrigerants, R-717, R-290, and R-744 should be about 0.055 psi (375 pa). The velocity pressure in one velocity head for high-pressure liquid halocarbon refrigerants should be about 0.11 psi (750 pa). See the definition of velocity pressure per velocity head in the second paragraph under "Optimum Sizing."

Pressure Loss in Valves and Fittings

Two methods are used for determining the pressure losses in valves and fittings. The most convenient one to use is the equivalent-length method, which expresses the flow resistance of valves and fittings in terms of length of the same size of pipe. Tables C9.10*a*, *b*, and *c* show equivalent lengths for valves and fittings. The total of the actual run of pipe plus the equivalent lengths for the valves and fittings gives the length used in the calculation of pressure loss.

The flow resistance of pipe and fittings can also be expressed in velocity heads k, where one velocity head is $k = f(L/D)$. This method is more complex, but it may be more accurate. In order to use this method, the length of pipe that has a resistance of one velocity head is determined so that the actual run of pipe can be expressed as a number of velocity heads (k). In order to accurately calculate the number of velocity heads in a length of pipe, the friction factor must either be calculated or determined from a Moody chart. To accurately estimate the number

TABLE C9.10*a* (IP) Valve Losses in Equivalent Feet of Pipe

Nominal pipe or tube size, in	Globe[a]	60° Wye	45° Wye	Angle[a]	Gate[b]	Swing check[c]	Lift check
⅜	17	8	6	6	0.6	5	Globe and vertical lift same as globe valve[d]
½	18	9	7	7	0.7	6	
¾	22	11	9	9	0.9	8	
1	29	15	12	12	1.0	10	
1¼	28	20	15	15	1.5	14	
1½	43	24	18	18	1.8	16	
2	55	30	24	24	2.3	20	
2½	69	35	29	29	2.8	25	
3	84	43	35	35	3.2	30	
3½	100	50	41	41	4.0	35	
4	120	58	47	47	4.5	40	
5	140	71	58	58	6.0	50	
6	170	88	70	70	7.0	60	
8	220	115	85	85	9.0	80	Angle lift same as angle valve
10	280	145	105	105	12.0	100	
12	320	165	130	130	13.0	120	
14	360	185	155	155	15.0	135	
16	410	210	180	180	17.0	150	
18	460	240	200	200	19.0	165	
20	520	275	235	235	22.0	200	
24	610	320	265	265	25.0	240	

Note: Losses are for valves in fully open position and with screwed, welded, flanged, or flared connections.

[a] These losses do not apply to valves with needlepoint seats.

[b] Regular and short pattern plug cock valves, when fully open, have same loss as gate valve. For valve losses of short pattern plug cocks above 6 in., check with manufacturer.

[c] Losses also apply to the in-line, ball-type check valve.

[d] For *Y* pattern globe lift check valve with seat approximately equal to the nominal pipe diameter, use values of 60° wye valve for loss.

TABLE C9.10*aM* (SI) Valve Losses in Equivalent Meters of Pipe

Nominal pipe or tube size, DN	Globe[a]	60° − Y	45° − Y	Angle[a]	Gate[b]	Swing check[c]	Lift check
10	5.2	2.4	1.8	1.8	0.2	1.5	Globe and vertical lift same as globe valve[d]
15	5.5	2.7	2.1	2.1	0.2	1.8	
20	6.7	3.4	2.1	2.1	0.3	2.2	
25	8.8	4.6	3.7	3.7	0.3	3.0	
32	12	6.1	4.6	4.6	0.5	4.3	
40	13	7.3	5.5	5.5	0.5	4.9	
50	17	9.1	7.3	7.3	0.73	6.1	
65	21	11	8.8	8.8	0.9	7.6	
80	26	13	11	11	1.0	9.1	
90	30	15	13	13	1.2	10	
100	37	18	14	14	1.4	12	
125	43	22	18	18	1.8	15	
150	52	27	21	21	2.1	18	Angle lift same as angle valve
200	62	35	26	26	2.7	24	
250	85	44	32	32	3.7	30	
300	98	50	40	40	4.0	37	
350	110	56	47	47	4.6	41	
400	125	64	55	55	5.2	46	
450	140	73	61	61	5.8	50	
500	160	84	72	72	6.7	61	
600	186	98	81	81	7.6	73	

Note: Losses are for valves in fully open position and with screwed, welded, flanged, or flared connections.

[a] These losses do not apply to valves with needlepoint seats.

[b] Regular and short pattern plug cock valves, when fully open, have same loss as gate valve. For valve losses of short pattern plug cocks above 150 mm, check with manufacturer.

[c] Losses also apply to the in-line, ball-type check valve.

[d] For *Y* pattern globe lift check valve with seat approximately equal to the nominal pipe diameter, use values of 60° wye valve for loss.

of velocity heads in a length of piping, the Reynolds number and the pipe or tube roughness must be determined. Tables C9.11*a* and *b* show representative velocity heads or *k* factors for valves and fittings.

It should be noted that sizes of copper tubes are referred to by nominal inside diameter in Tables C9.10 and C9.11. In all other capacity tables, the nominal outside diameter is used. This practice is probably carried over from the industry usage of referring to ASTM-280 or AC&R tubing by nominal outside diameters, and referring to other copper tubing used in plumbing by nominal inside diameters.

Example C9.1

Example of Pipe-Sizing Process. The following example details methods for determining flow rates, volume of flow, line sizing, and pressure-drop for R-22.

TABLE C9.10*b* (IP) Fitting Losses in Equivalent Feet of Pipe (Screwed, Welded, Flanged, Flared, and Brazed Connections)

	Smooth bend elbows						Smooth bend tees			
							Flow-through branch	Straight-through flow		
Nominal pipe or tube size, in	90° Std[a] 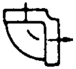	90° Long-radius[b] 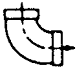	90° Street[a] 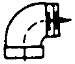	45° Std[a] 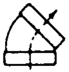	45° Street[a] 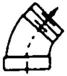	180° Std[a] 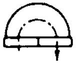	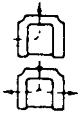	No reduction 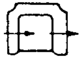	Reduced ¼ 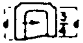	Reduced ½ 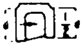
⅜	1.4	0.9	2.3	0.7	1.1	2.3	2.7	0.9	1.2	1.4
½	1.6	1.0	2.5	0.8	1.3	2.5	3.0	1.0	1.4	1.6
¾	2.0	1.4	3.2	0.9	1.6	3.2	4.0	1.4	1.9	2.0
1	2.6	1.7	4.1	1.3	2.1	4.1	5.0	1.7	2.2	2.6
1¼	3.3	2.3	5.6	1.7	3.0	5.6	7.0	2.3	3.1	3.3
½	4.0	2.6	6.3	2.1	3.4	6.3	8.0	2.6	3.7	4.0
2	5.0	3.3	8.2	2.6	4.5	8.2	10.0	3.3	4.7	5.0
2½	6.0	4.1	10.0	3.2	5.2	10.0	12.0	4.1	5.6	6.0
3	7.5	5.0	12.0	4.0	6.4	12.0	15.0	5.0	7.0	7.5
3½	9.0	5.9	15.0	4.7	7.3	15.0	18.0	5.9	8.0	9.0
4	10.0	6.7	17.0	5.2	8.5	17.0	21.0	6.7	9.0	10.0
5	13.0	8.2	21.0	6.5	11.0	21.0	25.0	8.2	12.0	13.0
6	16.0	10.0	25.0	7.9	13.0	25.0	30.0	10.0	14.0	16.0
8	20.0	13.0	—	10.0	—	33.0	40.0	13.0	18.0	20.0
10	25.0	16.0	—	13.0	—	42.0	50.0	16.0	23.0	25.0
12	30.0	19.0	—	16.0	—	50.0	60.0	19.0	26.0	30.0
14	34.0	23.0	—	18.0	—	55.0	68.0	23.0	30.0	34.0
16	38.0	26.0	—	20.0	—	62.0	78.0	26.0	35.0	38.0
18	42.0	29.0	—	23.0	—	70.0	85.0	29.0	40.0	42.0
20	50.0	33.0	—	26.0	—	81.0	100.0	33.0	44.0	50.0
24	60.0	40.0	—	30.0	—	94.0	115.0	40.0	50.0	60.0

[a] R/D approximately equal to 1.
[b] R/D approximately equal to 1.5.

TABLE C9.10*bM* (SI) Fitting Losses in Equivalent Meters of Pipe (Screwed, Welded, Flanged, Flared, and Brazed Connections)

Nominal pipe or tube size, DN	Smooth bend elbows						Smooth bend tees			
							Flow-through branch	Straight-through flow		
	90° Std[a]	90° Long-rad.[b]	90° Street[a]	45° Std[a]	45° Street[a]	180° Std[a]		No reduction	Reduced ¼	Reduced ½
		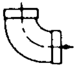				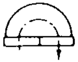	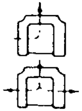	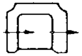		
10	0.4	0.3	0.7	0.2	0.3	0.7	0.8	0.3	0.4	0.4
15	0.5	0.3	0.8	0.2	0.4	0.8	0.9	0.3	0.4	0.5
20	0.6	0.4	1.0	0.3	0.5	1.0	1.2	0.4	0.6	0.6
25	0.8	0.5	1.2	0.4	0.6	1.2	1.5	0.5	0.7	0.8
32	1.0	0.7	1.7	0.5	0.9	1.7	2.1	0.7	0.9	1.0
40	1.2	0.8	1.9	0.6	1.0	1.9	2.4	0.8	1.1	1.2
50	1.5	1.0	2.5	0.8	1.4	2.5	3.0	1.0	1.4	1.5
65	1.8	1.2	3.0	1.0	1.6	3.0	3.7	1.2	1.7	1.8
80	2.3	1.5	3.7	1.2	2.0	3.7	4.6	1.5	2.1	2.3
90	2.7	1.8	4.6	1.4	2.2	4.6	5.5	1.8	2.4	2.7
100	3.0	2.0	5.2	1.6	2.6	5.2	6.4	2.0	2.7	3.0
125	4.0	2.5	6.4	2.0	3.4	6.4	7.6	2.5	3.7	4.0
150	4.9	3.0	7.6	2.4	4.0	7.6	9	3.0	4.3	4.9
200	6.1	4.0	—	3.0	—	10	12	4.0	5.5	6.1
250	7.6	4.9	—	4.0	—	13	15	4.9	7.0	7.6
300	9.1	5.8	—	4.9	—	15	18	5.8	7.9	9.1
350	10	7.0	—	5.5	—	17	21	7.0	9.1	10
400	12	7.9	—	6.1	—	19	24	7.9	11	12
450	13	8.8	—	7.0	—	21	26	8.8	12	13
500	15	10	—	7.9	—	25	30	10	13	15
600	18	12	—	9.1	—	29	35	12	15	18

[a] *R*/*D* approximately equal to 1.

[b] *R*/*D* approximately equal to 1.5.

TABLE C9.10*c* (IP) Special Fitting Losses in Equivalent Feet of Pipe

Nominal pipe or tube size, in	Sudden enlargement, *d*/*D*			Sudden contraction, *d*/*D*			Sharp edge		Pipe projection	
	¼	½	¾	¼	½	¾	Entrance	Exit	Entrance	Exit
	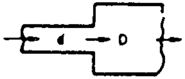			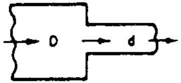			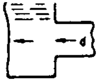	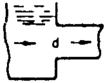	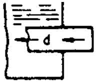	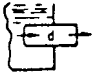
⅜	1.4	0.8	0.3	0.7	0.5	0.3	1.5	0.8	1.5	1.1
½	1.8	1.1	0.4	0.9	0.7	0.4	1.8	1.0	1.8	1.5
¾	2.5	1.5	0.5	1.2	1.0	0.5	2.8	1.4	2.8	2.2
1	3.2	2.0	0.7	1.6	1.2	0.7	3.7	1.8	3.7	2.7
1¼	4.7	3.0	1.0	2.3	1.8	1.0	5.3	2.6	5.3	4.2
1½	5.8	3.6	1.2	2.9	2.2	1.2	6.6	3.3	6.6	5.0
2	8.0	4.8	1.6	4.0	3.0	1.6	9.0	4.4	9.0	6.8
2½	10.0	6.1	2.0	5.0	3.8	2.0	12.0	5.6	12.0	8.7
3	13.0	8.0	2.6	6.5	4.9	2.6	14.0	7.2	14.0	11.0
3-½	15.0	9.2	3.0	7.7	6.0	3.0	17.0	8.5	17.0	13.0
4	17.0	11.0	3.8	9.0	6.8	3.8	20.0	10.0	20.0	16.0
5	24.0	15.0	5.0	12.0	9.0	5.0	27.0	14.0	27.0	20.0
6	29.0	22.0	6.0	15.0	11.0	6.0	33.0	19.0	33.0	25.0
8	—	25.0	8.5	—	15.0	8.5	47.0	24.0	47.0	35.0
10	—	32.0	11.0	—	20.0	11.0	60.0	29.0	60.0	46.0
12	—	41.0	13.0	—	25.0	13.0	73.0	37.0	73.0	57.0
14	—	—	16.0	—	—	16.0	86.0	45.0	86.0	66.0
16	—	—	18.0	—	—	18.0	96.0	50.0	96.0	77.0
18	—	—	20.0	—	—	20.0	115.0	58.0	115.0	90.0
20	—	—	—	—	—	—	142.0	70.0	142.0	108.0
24	—	—	—	—	—	—	163.0	83.0	163.0	130.0

Note: Enter table for losses at smallest diameter *d*.

TABLE C9.10*cM* (SI) Special Fitting Losses in Equivalent Meters of Pipe

	Sudden enlargement, *d*/*D*			Sudden contraction, *d*/*D*			Sharp edge		Pipe projection	
	¼	½	¾	¼	½	¾	Entrance	Exit	Entrance	Exit
Nominal pipe or tube size, DN	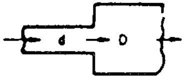			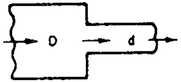			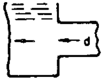	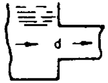	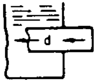	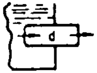
10	0.4	0.2	0.1	0.2	0.2	0.1	0.5	0.2	0.5	0.3
15	0.5	0.3	0.1	0.3	0.3	0.1	0.5	0.3	0.5	0.5
20	0.8	0.5	0.2	0.4	0.3	0.2	0.9	0.4	0.9	0.7
25	1.0	0.6	0.2	0.5	0.4	0.2	1.1	0.5	1.1	0.8
32	1.4	0.9	0.3	0.7	0.5	0.3	1.6	0.8	1.6	1.3
40	1.8	1.1	0.4	0.9	0.7	0.4	2.0	1.0	2.0	1.5
50	2.4	1.5	0.5	1.2	0.9	0.5	2.7	1.3	2.7	2.1
65	3.0	1.9	0.6	1.5	1.2	0.6	3.7	1.7	3.7	2.7
80	4.0	2.4	0.8	2.0	1.5	0.8	4.3	2.2	4.3	3.8
90	4.6	2.8	0.9	2.3	1.8	0.9	5.2	2.6	5.2	4.0
100	5.2	3.4	1.2	2.7	2.1	1.2	6.1	3.0	6.1	4.9
125	7.3	4.6	1.5	3.7	2.7	1.5	8.2	4.3	8.2	6.1
150	8.8	6.7	1.8	4.6	3.4	1.8	10	5.8	10	7.6
200	—	7.6	2.6	—	4.6	2.6	14	7.3	14	10
250	—	9.8	3.4	—	6.1	3.4	18	8.8	18	14
300	—	12.4	4.0	—	7.6	4.0	22	11	22	17
350	—	—	4.9	—	—	4.9	26	14	26	20
400	—	—	5.5	—	—	5.5	29	15	29	23
450	—	—	6.1	—	—	6.1	35	18	35	27
500	—	—	—	—	—	—	43	21	43	33
600	—	—	—	—	—	—	50	25	50	40

Note: Enter table for losses at smallest diameter *d*.

TABLE C9.11*a* (IP) *K* Factors—Screwed Pipe Fittings

Nominal pipe size (NPS)	90° ell reg.	90° ell long	45° ell	Return bend	Tee-line	Tee-branch	Globe valve	Gate valve	Angle valve	Swing check valve	Bell mouth inlet	Square inlet	Projected inlet
⅜	2.5	—	0.38	2.5	0.90	2.7	20	0.40	—	8.0	0.05	0.5	1.0
½	2.1	—	0.37	2.1	0.90	2.4	14	0.33	—	5.5	0.05	0.5	1.0
¾	1.7	0.92	0.35	1.7	0.90	2.1	10	0.28	6.1	3.7	0.05	0.5	1.0
1	1.5	0.78	0.34	1.5	0.90	1.8	9	0.24	4.6	3.0	0.05	0.5	1.0
1¼	1.3	0.65	0.33	1.3	0.90	1.7	8.5	0.22	3.6	2.7	0.05	0.5	1.0
1½	1.2	0.54	0.32	1.2	0.90	1.6	8	0.19	2.9	2.5	0.05	0.5	1.0
2	1.0	0.42	0.31	1.0	0.90	1.4	7	0.17	2.1	2.3	0.05	0.5	1.0
2½	0.85	0.35	0.30	1.85	0.90	1.3	6.5	0.16	1.6	2.2	0.05	0.5	1.0
3	0.80	0.31	0.29	1.80	0.90	1.2	6	0.14	1.3	2.1	0.05	0.5	1.0
4	0.70	0.24	0.28	0.70	0.90	1.1	5.7	0.12	1.0	2.0	0.05	0.5	1.0

Source: *Engineering Data Book* (HI 1979).

TABLE C9.11*b* *K* Factors—Flanged Welded Pipe Fittings

Nominal pipe size (NPS)	90° Ell reg.	90° Ell long	45° Ell long	Return bend reg.	Return bend long	Tee-line	Tee-branch	Glove valve	Gate valve	Angle valve	Swing check valve
1	0.43	0.41	0.22	0.43	0.43	0.26	1.0	13	—	4.8	2.0
1¼	0.41	0.37	0.22	0.41	0.38	0.25	0.95	12	—	3.7	2.0
1½	0.40	0.35	0.21	0.40	0.35	0.23	0.90	10	—	3.0	2.0
2	0.38	0.30	0.20	0.38	0.30	0.20	0.84	9	0.34	2.5	2.0
2½	0.35	0.28	0.19	0.35	0.27	0.18	0.79	8	0.27	2.3	2.0
3	0.34	0.25	0.18	0.34	0.25	0.17	0.76	7	0.22	2.2	2.0
4	0.31	0.22	0.18	0.31	0.22	0.15	0.70	6.5	0.16	2.1	2.0
6	0.29	0.18	0.17	0.29	0.18	0.12	0.62	6	0.10	2.1	2.0
8	0.27	0.16	0.17	0.27	0.15	0.10	0.58	5.7	0.08	2.1	2.0
10	0.25	0.14	0.16	0.25	0.14	0.09	0.53	5.7	0.06	2.1	2.0
12	0.24	0.13	0.16	0.24	0.13	0.08	0.50	5.7	0.05	2.1	2.0

Source: *Engineering Data Book* (HI 1979).

TABLE C9.11*a*(M) (SI) *K* Factors—Screwed Pipe Fittings

Nominal pipe size, DN	90° Ell reg.	90° Ell long	45° Ell	Return bend	Tee-line	Tee-branch	Globe valve	Gate valve	Angle valve	Swing check valve	Bell mouth inlet	Square inlet	Projected inlet
10	2.5	—	0.38	2.5	0.90	2.7	20	0.40	—	8.0	0.05	0.5	1.0
15	2.1	—	0.37	2.1	0.90	2.4	14	0.33	—	5.5	0.05	0.5	1.0
20	1.7	0.92	0.35	1.7	0.90	2.1	10	0.28	6.1	3.7	0.05	0.5	1.0
25	1.5	0.78	0.34	1.5	0.90	1.8	9	0.24	4.6	3.0	0.05	0.5	1.0
32	1.3	0.65	0.33	1.3	0.90	1.7	8.5	0.22	3.6	2.7	0.05	0.5	1.0
40	1.2	0.54	0.32	1.2	0.90	1.6	8	0.19	2.9	2.5	0.05	0.5	1.0
50	1.0	0.42	0.31	1.0	0.90	1.4	7	0.17	2.1	2.3	0.05	0.5	1.0
65	0.85	0.35	0.30	0.85	0.90	1.3	6.5	0.16	1.6	2.2	0.05	0.5	1.0
80	0.80	0.31	0.29	0.80	0.90	1.2	6	0.14	1.3	2.1	0.05	0.5	1.0
100	0.70	0.24	0.28	0.70	0.90	1.1	5.7	0.12	1.0	2.0	0.05	0.5	1.0

Source: *Engineering Data Book* (HI 1979).

TABLE C9.11*b*(M) (SI) *K* Factors—Flanged Welded Pipe Fittings

Nominal pipe size, DN	90° Ell reg.	90° Ell long	45° Ell long	Return bend reg.	Return bend long	Tee-line	Tee-branch	Globe valve	Gate valve	Angle valve	Swing check valve
25	0.43	0.41	0.22	0.43	0.43	0.26	1.0	13	—	4.8	2.0
32	0.41	0.37	0.22	0.41	0.38	0.25	0.95	12	—	3.7	2.0
40	0.40	0.35	0.21	0.40	0.35	0.23	0.90	10	—	3.0	2.0
50	0.38	0.30	0.20	0.38	0.30	0.20	0.84	9	0.34	2.5	2.0
65	0.35	0.28	0.19	0.35	0.27	0.18	0.79	8	0.27	2.3	2.0
80	0.34	0.25	0.18	0.34	0.25	0.17	0.76	7	0.22	2.2	2.0
100	0.31	0.22	0.18	0.31	0.22	0.15	0.70	6.5	0.16	2.1	2.0
150	0.29	0.18	0.17	0.29	0.18	0.12	0.62	6	0.10	2.1	2.0
200	0.27	0.16	0.17	0.27	0.15	0.10	0.58	5.7	0.08	2.1	2.0
250	0.25	0.14	0.16	0.25	0.14	0.09	0.53	5.7	0.06	2.1	2.0
300	0.24	0.13	0.16	0.24	0.13	0.08	0.50	5.7	0.05	2.1	2.0

Source: *Engineering Data Book* (HI 1979).

Given:

A refrigeration system uses refrigerant R-22 with a capacity of 100 tons (352 kW) at an evaporating temperature of 23°F (−5°C) and a water-cooled condensing temperature of 104° (40°C). The suction line is 82 ft (25 m) long, with two angle valves, one swing check valve, and three elbows. The discharge line is 98 ft (30 m) long, with one globe valve, one lift check valve, and three elbows. The liquid line is 180 ft (55 m) long, with two angle valves and three elbows.

From Table C9.1, the refrigerant flow rate is 2.96 lb/min per ton (6.36×10^{-3} kg/s per kW)

Flow for 100 tons 100 × 2.96 = 296 lbm/min ($352 \times 6.36 \times 10^{-3} = 2.24$ kg/s)

Suction specific volume at 23°F (−5°C) from table of thermophysical properties: $V_g = 0.8856$ lbs/ft^3 (14.19 kg/m^3).

Actual suction volume: 296/0.8856 = 334 cfm (2.24/14.19 = 0.158 m^3/s)

Approximate discharge volume from Eq. C9.3:

Absolute pressure of R-22 @ +104°F from Table C9.2*a* (IP) = 222.5 psia

Absolute pressure of R-22 @ 23°F from Table C9.2a (IP) = 61.21 psia

Approximate discharge volume = suction volume × P_1/P_2 × 1.2

262 × (61.21/222.5) × 1.2 = 86.5 cfm

(Absolute pressure of R-22 @ +40°C from Table C9.2*a* SI = 1534 kPa)

(Absolute pressure of R-22 @ −5°C from Table C9.2*a* SI = 422 kPa)

(Approximate discharge volume m^3/kW = suction volume × P_1/P_2 × 1.2)

(0.124 × 422/1545 × 1.2 = 0.0406 m^3/s)

Liquid density at 104°F (+40°C) from table of thermophysical properties is: 70.44 lb/ft^3 (1.128 kg/m^3)

Actual liquid flow volume = mass flow/liquid density

296/70.44 = 4.2 cfm (2.24/1,128 = 1.98 dm^3/s)

Suction Line. For the suction line, try the nominal NPS 4 steel pipe: (See Tables C9.10a and b; note that the IP and SI valve and fitting losses are not exactly equivalent because of rounding.)

Length of run	=	82 ft	(25 m)
Two angle valves	=	94 ft	(28 m)
One swing check	=	40 ft	(12 m)
Three elbows	=	20.1 ft	(6 m)
Total equivalent length	=	236.1 ft	(71 m)

Suction line temperature and pressure drop using Note 2 under Table C9.9

Interpolate tons capacity at + 23°F...... ~ 123 tons (−5°C at 433 kW)

$$\Delta t = 2 \times 236.1/100 \times (100/123)^{1.96}$$

$$= 3.15^\circ\mathrm{F} \qquad (1.74^\circ C)$$

Interpolate pressure drop at + 23°F...... ~ 2.32 psi (16 kPa)

$$\Delta p = 2.32 \times 236.1/100 \times (100/123)$$

$$= 4.33 \text{ psi} \qquad (30.68 \text{ kPa})$$

The NPS 4 steel pipe is satisfactory for the pressure drop. The rated pressures from Table C9.20 for ERW pipe is 732 × 0.85 = 622 psig (4277 kPa), while the suggested test pressure for R22 in Table C9.19 for the low side is 182 psig (1255 kPa). Either seamless or ERW NPS 4 steel pipe is satisfactory for the required capacity and pressure.

Discharge Line. For the discharge line, try the 3 IPS steel pipe. (See Tables C9.10*a* and *b*, note that the IP and SI equivalent lengths are not exactly equal because of rounding.)

Length of line	=	98 ft	(30 m)
One globe valve	=	69 ft	(21 m)
One lift check	=	69 ft	(21 m)
Three long radius elbows	=	15 ft	(4.6 m)
Total equivalent length	=	251 ft	(76.6 m)

Using Table C9.9: The capacity of a NPS 3 pipe is 116.4 tons @ 1°F temperature drop.

$$\Delta t = 1.0(251/100)(100/116.4)^{1.96}$$

$$= 1.86^\circ\text{F} \qquad (1.03^\circ\text{C})$$

$$\Delta p = 3.05 \times (244.1/100)(100/116.4)^{1.96}$$

$$= 5.6 \text{ psig} \qquad (39.2 \text{ kPa})$$

The 3 IPS steel pipe is satisfactory for pressure drop. For strength, Table C9.20 shows the pressure rating as 664 psig (4564 kPa) for ERW schedule 40 pipe. Table C9.19 shows a suggested minimum field test pressure of 235 psig, (1628 kPa) while Table C9.18 shows the ANSI minimum design pressure as 208 psig (1433 kPa). Actual U.S. industry practice is to use 250 psig (1724 kPa) design pressure for water-cooled R-22 systems, and 300 psig (2068 kPa) or higher for air-cooled R-22 systems.

Liquid Lines. For the condenser drain, use 100 fpm (0.5 m/s) for sizing, when vapor from the receiver may flow in opposition with the free-draining liquid. Table C9.9 indicates the NPS 3 (DN 80) has a capacity of 118.5 tons at 100 fpm (412.7 kPa @ 0.5 m/s). When an equalizer line is used to vent the receiver to the top of the condenser, a velocity of 150 fpm (0.75 m/s) may be used for full liquid flow in the drain. A NPS 2½ (DN 65) has a capacity of 115 tons at 150 fpm (401 kPa at 0.75 m/s).

For the liquid line to the evaporator, try a NPS 2 steel pipe. From Tables C9.10*a* IP and C9.10*b* IP:

Line length	=	180 ft	(55 m)
Two angle valves	=	48 ft	(14.6 m)
Three elbows	=	9.9 ft	(3.0 m)
Total equivalent length	=	237.9 ft	(72.6 m)

From the receiver to the evaporator, check the equivalent temperature drop in a NPS 2 steel liquid line. Table C9.9 indicates a 1°F temperature drop per 100 feet of NPS 2 line (0.02°K/m in DN50.)

Temperature and pressure drop in NPS 2 liquid line for 100 tons (352 kPa in DN50):

$$\Delta t = 1.0 \times 237.9/100 \times (100/192)^{1.96}$$

$$= 0.662°\text{F} \qquad (0.368°\text{C})$$

$$\Delta p = 3.05 \times 237.9/100 \times (100/192)^{1.96}$$

$$= 2.02 \text{ psi} \qquad (13.93 \text{ kPa})$$

For the illustrated calculations, the selected line sizes are as follows:

Suction line	NPS 4	(DN 100)
Discharge line	NPS 3	(DN 80)
Liquid line to receiver	NPS 3	(DN 80)
Liquid line to expansion valve	NPS 2	(DN 50)

The compressor selection must be adjusted for the suction and discharge line losses, so the compressor should be selected for the following gauge pressures:

Suction pressure	= 46.54 − 4.45	= 42.09 psig	(290 kPa)
Discharge pressure	= 222.56 + 5.68	= 228.2 psig	(1575 kPa)

Secondary Coolants

Piping for secondary coolant service may be designed by the methods used for water.

Consideration must be given to an economical choice of pressure loss and pump power. In evaluation of pressure drop, the density and viscosity have a direct effect. An additional consideration is the compatibility of materials with the fluid.

In the selection of the concentration of water-based secondary coolants, it is desirable to select a mixture which has a freezing point at least 18 to 20°F (10 to 11°C) below the operating temperature expected in the system. Use of lower freezing point mixtures provides a larger margin to prevent freezing. However, this is costly because of reduced heat transfer and increased pumping costs. The methods in Chap. B8 may be applied for sizing of secondary coolant piping. For four common water-based secondary coolants, Table C9.12 in IP shows the specific gravity, freezing point, and viscosity at various concentrations. Table C9.12 in SI shows percent by mass, density, specific heat, and viscosity at a temperature 18°F (10°C) above the freezing point. This information enables determination of the friction factor and the subsequent pressure loss.

Oil Return

The CFC and HCFC and hydrocarbon refrigerants are miscible with mineral oil. These refrigerants carry some oil in the liquid phase without separation, whereas the newer HFC refrigerants require synthetic oil to provide mutual solubility. Some practitioners suggest the use of small additions of R-290 or other hydrocarbons to improve the oil circulation when using conventional mineral oils with HFC

TABLE C9.12 (IP) Secondary Coolant Properties

Concentration %	Calcium chloride			Sodium chloride			Ethylene glycol			Propylene glycol		
	Specific gravity*	Freezing point, F	Viscosity†	Specific gravity*	Freezing point, F	Viscosity†	Specific gravity*	Freezing point, F	Viscosity†	Specific gravity*	Freezing point, F	Viscosity†
0	1.00	32°	1.27	1.00	32°	1.27	1.00	32°	1.27	1.00	32°	1.27
5	1.044	27.7	1.45	1.035	27.0	1.45	1.005	30	1.50	1.004	29.5	1.60
10	1.087	22.3	1.80	1.072	20.4	1.75	1.012	25.2	1.80	1.009	26.0	2.0
15	1.133	13.5	2.5	1.111	12.0	2.3	1.019	21	2.03	1.014	24.5	2.6
20	1.182	−0.4	4.1	1.15	1.8	3.4	1.026	15.8	2.9	1.018	20.5	3.7
23.3‡	. . . . .	. . . . .	. . . . .	1.175	−6.0	4.7	. . . .	. . . .	. . . .	. . . .	. . . .	. . .
25	1.233	−21.0	9.7	1.191	16.0	3.0	1.033	10.5	3.7	1.022	15.6	5.2
29.87‡	1.290	−67.0	38.0	. . . . .	. . . .	. . . .	. . . .	. . . .	. . . .	. . . .	. . . .	. . .
30	1.295	−50.8	25.7	. . . . .	. . . .	. . . .	1.039	3.2	5.0	1.027	10.0	7.7
35	. . . . .	. . . . .	. . . . .	. . . . .	. . . .	. . . .	1.046	−1.0	6.3	1.031	3.5	12.6
40	. . . . .	. . . . .	. . . . .	. . . . .	. . . .	. . . .	1.053	−12.0	11.0	1.035	−4.0	24.0
45	. . . . .	. . . . .	. . . . .	. . . . .	. . . .	. . . .	1.059	−17.0	15.0	1.038	−15.0	45.0
50	. . . . .	. . . . .	. . . . .	. . . . .	. . . .	. . . .	1.066	−33.0	29.0	1.041	−24.0	85.0
55	. . . . .	. . . . .	. . . . .	. . . . .	. . . .	. . . .	1.072	−43.0	55.0	. . . .	. . . .	. . .

* Specific gravities compared with water at 60°F.

† Viscosities in centipoises at 20°F above freezing point.

‡ Eutectic points.

TABLE C9.12*a* (SI) Secondary Coolant Properties of Calcium Chloride—Water

Freezing point °C	Percent by mass %	Density* kg/m^3	Specific heat* J/kg·K	Dyn. viscosity* 10^{-3} Ns/m^2
−5	9.0	1078	3640	1.86
−10	14.0	1127	3340	2.47
−15	18.0	1167	3132	3.44
−20	21.0	1200	2990	4.50
−25	24.0	1234	2868	6.28
−30	26.0	1259	2780	8.30
−35	28.0	1282	2712	12.2
−40	29.5	2660	2660	17.4
−45	31.0	1312	2612	28.0

TABLE C9.12*b* (SI) Secondary Coolant Properties of Sodium Chloride—Water

Freezing point °C	Percent mass %	Density* kg/m^3	Specific heat* J/kg·K	Dyn. viscosity* 10^{-3} Ns/m^2
−5	7.9	1060	3782	1.70
−10	14.1	1109	3545	2.25
−15	18.8	1149	3405	3.10
−20	22.6	1183	3310	4.20

* Properties at 10°C above the freezing point.

refrigerants. Some oil is carried with the discharge gas from most conventional vapor compressors. In halocarbon direct-expansion systems without oil separators, the oil will pass through the system, returning with the suction vapor. In fact, mineral oil in small amounts improves vaporizing heat transfer by reducing the surface tension of the boiling liquid. Oil in greater quantities drastically reduces the vaporizing heat transfer in an evaporator. Reducing the proportion of oil circulating in the system is accomplished by use of synthetic oil, by lower temperatures in the discharge gas to reduce the amount of vaporized oil, and by the use of high-efficiency separating elements.

Oil discharged from the compressor is carried through the discharge line to the condenser and through the liquid line to the receiver. It then proceeds through the liquid line from the receiver to the evaporator, where it will collect in flooded evaporators as it does not vaporize. Various methods are used to bleed a mixture of oil and liquid refrigerant from flooded evaporators into the suction line. Heat exchange between the return suction line and the warm liquid feed line is a common method used to ‘‘dry’’ the returning refrigerant. The cooling of the liquid feed by the evaporation of the returning refrigerant conserves the refrigeration effect. Other methods of oil return involve heating the return mixture in a separate line through heat exchange with the discharge gas. Still other successful methods involve automated refrigerant gas pumping devices such as ejectors or electrically heated oil stills that are intermittantly pressurized or are equipped with pumps to transfer distilled oil back into the suction of the compressor.

After oil is introduced into the suction line by a direct expansion system or by one of the just-noted methods from flooded evaporators, the gas velocity in vertical return risers must be maintained so that the oil will be carried up the riser. The necessary velocities expressed in tons (kW) capacity have been experimentally

TABLE C9.12*c* (SI) Secondary Coolant Properties of Ethylene Glycol—Water

Freezing point °C	Percent mass %	Density* kg/m³	Specific heat* J/kg·K	Dyn. viscosity* 10^{-3} Ns/m²
−5	14.0	1020	4005	2.285
−10	23.5	1035	3820	3.525
−15	30.5	1047	3650	5.58
−20	36.0	1058	3440	7.90
−25	41.0	1068	3340	12.4
−30	45.5	1077	3205	18.0
−35	49.5	1084	3082	30.4
−40	53.0	1090	2950	48.0
−45	56.0	1095	2840	120.0

TABLE C9.12*d* Secondary Coolant Properties of Propylene Glycol—Water

Freezing point °C	Percent mass %	Density* kg/m³	Specific heat* J/kg·K	Dyn. viscosity* 10^{-3} Ns/m²
−5	15	1014	4082	2.90
−10	25	1025	3975	5.45
−15	33	1036	3858	11.5
−20	39	1045	3738	21.0
−25	44	1051	3625	44.8
−30	48	1058	3530	76.0
−35	51	1063	3440	168.0
−40	54	1067	3365	290.0
−45	57	1070	3288	700.0

* Properties at 10°C above freezing point.

determined. Table C9.13 lists the minimum capacities in copper tubes that will carry oil up suction risers. Table C9.14 lists the minimum capacities in copper tubes that will carry oil up discharge or hot gas risers. Multipliers shown at the bottom of Table C9.14 can be used for sizing oil return risers at various temperatures.

When a system operates over a range of capacities, the riser sized for the full load condition may not be functional for oil return at part loads. Is such cases, a double riser will increase the range of loads that will provide oil return. See Fig. C9.7 for details of a double riser. Lines A and B are sized so the two together will handle the full load with proper oil return in accordance with Tables C9.13 or C9.14, or with equivalent velocities of other refrigerants. Line A should be sized for the minimum capacity.

Since mineral oil has a very limited solubility with liquid ammonia, and is not mutually soluble with vaporized ammonia, it does not travel back to the compressor in dry vapor suction lines. Control of oil in ammonia plants is usually accomplished with efficient oil separators, and manually operated oil drain pots, stills, and pump-out systems. Some degree of automation is successfully used to return oil from evaporators to ammonia accumulators, such as is used in hot-gas defrosting methods. However, the separation of oil in the low side means that the principal method of oil control in ammonia systems is provided by oil stills or oil pots at the accumulators in flooded or circulated system evaporators. Additional automation of oil return is

TABLE C9.13 (IP) Minimum Refrigeration Capacity in Tons for Oil Entrainment up Suction Risers (Type L Copper Tubing)

Refrigerant	Saturated suction temp., °F	Suction gas temp., °F	Pipe OD, in											
			½	⅝	¾	⅞	1-⅛	1-⅜	1-⅝	2-⅛	2-⅝	3-⅛	3-⅝	4-⅛
			Area, in²											
			0.146	0.233	0.348	0.484	0.825	1.256	1.780	3.094	4.770	6.812	9.213	11.970
22	−40.0	−30.0	0.067	0.119	0.197	0.298	0.580	0.981	1.52	3.03	5.20	8.12	11.8	16.4
		−10.0	0.065	0.117	0.194	0.292	0.570	0.963	1.49	2.97	5.11	7.97	11.6	16.1
		10.0	0.066	0.118	0.195	0.295	0.575	0.972	1.50	3.00	5.15	8.04	11.7	16.3
	−20.0	−10.0	0.087	0.156	0.258	0.389	0.758	1.28	1.98	3.96	6.80	10.6	15.5	21.5
		10.0	0.085	0.153	0.253	0.362	0.744	1.26	1.95	3.88	6.67	10.4	15.2	21.1
		30.0	0.086	0.154	0.254	0.383	0.747	1.26	1.95	3.90	6.69	10.4	15.2	21.1
	0.0	10.0	0.111	0.199	0.328	0.496	0.986	1.63	2.53	5.04	8.66	13.5	19.7	27.4
		30.0	0.108	0.194	0.320	0.484	0.942	1.59	2.46	4.92	8.45	13.2	19.2	26.7
		50.0	0.109	0.195	0.322	0.486	0.946	1.60	2.47	4.94	8.48	13.2	19.3	26.8
	20.0	30.0	0.136	0.244	0.403	0.608	1.18	2.00	3.10	6.18	10.6	16.6	24.2	33.5
		50.0	0.135	0.242	0.399	0.603	1.17	1.99	3.07	6.13	10.5	16.4	24.0	33.3
		70.0	0.135	0.242	0.400	0.605	1.18	1.99	3.08	6.15	10.6	16.5	24.0	33.3
	40.0	50.0	0.167	0.300	0.495	0.748	1.46	2.46	3.81	7.60	13.1	20.4	29.7	41.3
		70.0	0.165	0.296	0.488	0.737	1.44	2.43	3.75	7.49	12.9	20.1	29.3	40.7
		90.0	0.165	0.296	0.488	0.738	1.44	2.43	3.76	7.50	12.9	20.1	29.3	40.7
134a	0.0	10.0	0.089	0.161	0.259	0.400	0.78	1.32	2.03	4.06	7.0	10.9	15.9	22.1
		30.0	0.075	0.135	0.218	0.336	0.66	1.11	1.71	3.42	5.9	9.2	13.4	18.5
		50.0	0.072	0.130	0.209	0.323	0.63	1.07	1.64	3.28	5.6	8.8	12.8	17.8
	10.0	20.0	0.101	0.182	0.294	0.453	0.88	1.49	2.31	4.61	7.9	12.4	18.0	25.0
		40.0	0.084	0.152	0.246	0.379	0.74	1.25	1.93	3.86	6.6	10.3	15.1	20.9
		60.0	0.081	0.147	0.237	0.366	0.71	1.21	1.87	3.73	6.4	10.0	14.6	20.2

TABLE C9.13 (IP) Minimum Refrigeration Capacity in Tons for Oil Entrainment up Suction Risers (Type L Copper Tubing) *(Continued)*

Refrigerant	Saturated suction temp., °F	Suction gas temp., °F	Pipe OD, in: ½	⅝	¾	⅞	1-⅛	1-⅜	1-⅝	2-⅛	2-⅝	3-⅛	3-⅝	4-⅛
			Area, in²: 0.146	0.233	0.348	0.484	0.825	1.256	1.780	3.094	4.770	6.812	9.213	11.970
134a	20.0	30.0	0.113	0.205	0.331	0.510	0.99	1.68	2.60	5.19	8.9	13.9	20.3	28.2
		50.0	0.095	0.172	0.277	0.427	0.83	1.41	2.17	4.34	7.5	11.6	17.0	23.6
		70.0	0.092	0.166	0.268	0.413	0.81	1.36	2.10	4.20	7.2	11.3	16.4	22.8
	30.0	40.0	0.115	0.207	0.335	0.517	1.01	1.70	2.63	5.25	9.0	14.1	20.5	28.5
		60.0	0.107	0.193	0.311	0.480	0.94	1.58	2.44	4.88	8.4	13.1	19.1	26.5
		80.0	0.103	0.187	0.301	0.465	0.91	1.53	2.37	4.72	8.1	12.7	18.5	25.6
	40.0	50.0	0.128	0.232	0.374	0.577	1.12	1.90	2.94	5.87	10.1	15.7	22.9	31.8
		70.0	0.117	0.212	0.342	0.528	1.03	1.74	2.69	5.37	9.2	14.4	21.0	29.1
		90.0	0.114	0.206	0.332	0.512	1.00	1.69	2.61	5.21	8.9	14.0	20.4	28.3
502	−40.0	−30.0	0.051	0.092	0.152	0.230	0.447	0.756	1.17	2.33	4.01	6.26	9.13	12.7
		−10.0	0.053	0.095	0.157	0.237	0.461	0.779	1.21	2.41	4.13	6.45	9.41	13.1
		10.0	0.055	0.098	0.163	0.246	0.476	0.809	1.25	2.50	4.29	6.39	9.76	13.5
	−20.0	−10.0	0.068	0.122	0.201	0.303	0.591	0.999	1.54	3.08	5.30	8.27	12.1	16.7
		10.0	0.070	0.125	0.207	0.312	0.608	1.03	1.59	3.17	5.45	8.51	12.4	17.2
		30.0	0.072	0.129	0.213	0.322	0.627	1.06	1.64	3.27	5.62	8.78	12.8	17.8
	0.0	10.0	0.087	0.157	0.259	0.391	0.761	1.29	1.99	3.97	6.82	10.6	15.5	21.5
		30.0	0.089	0.160	0.264	0.399	0.777	1.31	2.03	4.05	6.96	10.9	15.9	22.0
		50.0	0.092	0.165	0.273	0.412	0.802	1.36	2.10	4.19	7.19	11.2	16.4	22.7
	20.0	30.0	0.110	0.197	0.325	0.491	0.957	1.62	2.50	4.99	8.58	13.4	19.5	27.1
		50.0	0.112	0.201	0.331	0.501	0.975	1.65	2.55	5.09	8.74	13.6	19.9	27.6
		70.0	0.115	0.207	0.342	0.516	1.01	1.70	2.63	5.25	9.02	14.1	20.5	28.5
	40.0	50.0	0.136	0.243	0.401	0.606	1.18	2.00	3.09	6.16	10.6	16.5	24.1	33.4
		70.0	0.138	0.247	0.408	0.616	1.20	2.03	3.14	6.28	10.8	16.8	24.5	34.0
		90.0	0.142	0.254	0.420	0.634	1.23	2.09	3.23	6.44	11.1	17.3	25.2	35.0

Notes:

1. Refrigeration capacity in tons is based on 90°F liquid temperature and superheat as indicated by the listed temperature. For other liquid line temperatures, use correction factors in the table to the right.
2. This table has been computed using an ISO 32 mineral oil for R-22 and R-502. R-134a has been computed using an ISO 32 ester-based oil.

Refrigerant	Liquid temperature, °F: 50	60	70	80	100	110	120	130	140
22	1.17	1.14	1.10	1.06	0.98	0.94	0.89	0.85	0.80
134a	1.26	1.20	1.13	1.07	0.94	0.87	0.80	0.74	0.67
502	1.24	1.18	1.12	1.06	0.94	0.87	0.81	0.74	0.67

TABLE C9.13 (SI) Minimum Refrigeration Capacity in Kilowatts for Oil Entrainment Up Suction Risers (Copper Tubing, ASTM B88M, Type B, Metric Size)

Refrigerant	Saturated temp., °C	Suction gas temp., °C	Tubing diameter, nominal OD, mm											
			12	15	18	22	28	35	42	54	67	79	105	130
134a	−10.0	−5.0	0.274	0.502	0.844	1.437	2.732	4.848	7.826	15.006	25.957	39.340	81.164	140.509
		5.0	0.245	0.450	0.756	1.287	2.447	4.342	7.010	13.440	23.248	35.235	72.695	125.847
		15.0	0.238	0.436	0.732	1.247	2.370	4.206	6.790	13.019	22.519	34.129	70.414	121.898
134a	−5.0	0.0	0.296	0.543	0.913	1.555	2.956	5.244	8.467	16.234	28.081	42.559	87.806	152.006
		10.0	0.273	0.500	0.840	1.431	2.720	4.827	7.792	14.941	25.843	39.168	80.809	139.894
		20.0	0.264	0.484	0.813	1.386	2.634	4.674	7.546	14.468	25.026	37.929	78.254	135.471
134a	5.0	10.0	0.357	0.655	1.100	1.874	3.562	6.321	10.204	19.565	33.843	51.292	105.823	183.197
		20.0	0.335	0.615	1.033	1.761	3.347	5.938	9.586	18.380	31.792	48.184	99.412	172.098
		30.0	0.317	0.582	0.978	1.667	3.168	5.621	9.075	17.401	30.099	45.617	94.115	162.929
134a	10.0	15.0	0.393	0.721	1.211	2.063	3.921	6.957	11.232	21.535	37.250	56.456	116.479	201.643
		25.0	0.370	0.679	1.141	1.944	3.695	6.555	10.583	20.291	35.098	53.195	109.749	189.993
		35.0	0.358	0.657	1.104	1.881	3.576	6.345	10.243	19.640	33.971	51.486	106.224	183.891
22	−40	−35	0.182	0.334	0.561	0.956	1.817	3.223	5.203	9.977	14.258	26.155	53.963	93.419
		−25	0.173	0.317	0.532	0.907	1.723	3.057	4.936	9.464	16.371	24.811	51.189	88.617
		−15	0.168	0.307	0.516	0.880	1.672	2.967	4.791	9.185	15.888	24.080	49.681	86.006
22	−20	−15	0.287	0.527	0.885	1.508	2.867	5.087	8.213	15.748	27.239	41.283	85.173	147.449
		−5	0.273	0.501	0.841	1.433	2.724	4.834	7.804	14.963	25.882	39.226	80.929	140.102
		5	0.264	0.485	0.815	1.388	2.638	4.680	7.555	14.487	25.058	37.977	78.353	135.642
22	−5	0	0.389	0.713	1.198	2.041	3.879	6.883	11.112	21.306	36.854	55.856	115.240	199.499
		10	0.369	0.676	1.136	1.935	3.678	6.526	10.535	20.200	34.940	52.954	109.254	189.136
		20	0.354	0.650	1.092	1.861	3.537	6.275	10.131	19.425	33.600	50.924	105.065	181.884
22	5	10	0.470	0.862	1.449	2.468	4.692	8.325	13.441	25.771	44.577	67.560	139.387	241.302
		20	0.440	0.807	1.356	2.311	4.393	7.794	12.582	24.126	41.731	63.246	130.488	225.896
		30	0.422	0.774	1.301	2.217	4.213	7.476	12.069	23.141	40.027	60.665	125.161	216.675

TABLE C9.13 (SI) Minimum Refrigeration Capacity in Kilowatts for Oil Entrainment Up Suction Risers (Copper Tubing, ASTM B88M, Type B, Metric Size) *(Continued)*

Refrig-erant	Saturated temp., °C	Suction gas temp., °C	Tubing diameter, nominal OD, mm											
			12	15	18	22	28	35	42	54	67	79	105	130
502	−40	−35	0.129	0.236	0.397	0.676	1.284	2.279	3.679	7.054	12.201	18.492	38.152	66.048
		−25	0.125	0.229	0.385	0.657	1.248	2.215	3.575	6.855	11.858	17.972	37.079	64.190
		−15	0.121	0.223	0.374	0.638	1.212	2.151	3.472	6.658	11.516	17.453	36.009	62.337
502	−20	−15	0.210	0.385	0.647	1.102	2.096	3.718	6.003	11.510	19.909	30.173	62.253	107.769
		−5	0.204	0.374	0.628	1.070	2.033	3.607	5.823	11.166	19.314	29.272	60.392	104.549
		5	0.198	0.363	0.611	1.041	1.978	3.510	5.666	10.865	18.793	28.482	58.763	101.728
502	5	0	0.288	0.528	0.887	1.510	2.871	5.094	8.224	15.770	27.277	41.341	84.292	147.655
		10	0.279	0.511	0.859	1.464	2.783	4.937	7.970	15.282	26.434	40.063	82.656	143.091
		20	0.271	0.496	0.834	1.421	2.701	4.793	7.737	14.835	25.661	38.891	80.239	138.907
502	5	10	0.347	0.637	1.071	1.824	3.467	6.151	9.931	19.041	32.936	49.917	102.986	178.286
		20	0.336	0.617	1.036	1.765	3.356	5.954	9.613	18.431	31.881	48.318	99.688	172.577
		30	0.326	0.598	1.005	1.713	3.256	5.777	9.326	17.882	30.932	46.880	96.721	167.439

Notes:

1. Refrigeration capacity in kilowatts is based on saturated evaporator as shown in table and condensing temperature of 40°C. For other liquid line temperatures, use correction factors in the table below.
2. The tables have been computed using an ISO 32 mineral oil for R-22 and R-502. R-134a has been computed using an ISO 32 ester-based oil.

Refrigerant	Liquid temperature, °C		
	20	30	50
134a	1.20	1.10	0.89
22	1.17	1.08	0.91
502	1.26	1.12	0.86

TABLE C9.14 (IP) Minimum Refrigeration Capacity in Tons for Oil Entrainment up Hot-Gas Risers (Type L Copper Tubing)

Refrigerant	Saturated temp., °F	Discharge gas temp., °F	Pipe OD, in											
			½	⅝	¾	⅞	1-⅛	1-⅜	1-⅝	2-⅛	2-⅝	3-⅛	3-⅝	4-⅛
			Area, in^2											
			0.146	0.233	0.348	0.484	0.825	1.256	1.780	3.094	4.770	6.812	9.213	11.970
22	80.0	110.0	0.235	0.421	0.695	1.05	2.03	3.46	5.35	10.7	18.3	28.6	41.8	57.9
		140.0	0.223	0.399	0.659	0.996	1.94	3.28	5.07	10.1	17.4	27.1	39.6	54.9
		170.0	0.215	0.385	0.635	0.960	1.87	3.16	4.89	9.76	16.8	26.2	38.2	52.9
	90.0	120.0	0.242	0.433	0.716	1.06	2.11	3.56	5.50	11.0	18.9	29.5	43.0	59.6
		150.0	0.226	0.406	0.671	1.01	1.97	3.34	5.16	10.3	17.7	27.6	40.3	55.9
		180.0	0.216	0.387	0.540	0.956	1.88	3.18	4.92	9.82	16.9	26.3	38.4	53.3
	100.0	130.0	0.247	0.442	0.730	1.10	2.15	3.83	5.62	11.2	19.3	30.1	43.9	60.8
		160.0	0.231	0.414	0.884	1.03	2.01	3.40	5.26	10.5	18.0	28.2	41.1	57.0
		190.0	0.220	0.394	0.650	0.982	1.91	3.24	3.00	9.96	17.2	26.8	39.1	54.2
	110.0	140.0	0.251	0.451	0.744	1.12	2.19	3.70	5.73	11.4	19.6	30.6	44.7	62.0
		170.0	0.235	0.421	0.693	1.05	2.05	3.46	3.35	10.7	18.3	28.6	41.8	57.9
		200.0	0.222	0.399	0.658	0.994	1.94	3.28	5.06	10.1	17.4	27.1	39.5	54.8
	120.0	150.0	0.257	0.460	0.760	1.15	2.24	3.78	5.85	11.7	20.0	31.3	45.7	63.3
		180.0	0.239	0.428	0.707	1.07	2.08	3.51	5.44	10.8	18.6	29.1	42.4	58.9
		210.0	0.225	0.404	0.666	1.01	1.96	3.31	5.12	10.2	17.6	27.4	40.0	55.5
134a	80.0	110.0	0.199	0.360	0.581	0.897	1.75	2.96	4.56	9.12	15.7	24.4	35.7	49.5
		140.0	0.183	0.331	0.535	0.825	1.61	2.72	4.20	8.39	14.4	22.5	32.8	45.6
		170.0	0.176	0.318	0.512	0.791	1.54	2.61	4.02	8.04	13.8	21.6	31.4	43.6
	90.0	120.0	0.201	0.364	0.587	0.906	1.76	2.99	4.61	9.21	15.8	24.7	36.0	50.0
		150.0	0.184	0.333	0.538	0.830	1.62	2.74	4.22	8.44	14.5	22.6	33.0	45.8
		180.0	0.177	0.320	0.516	0.796	1.55	2.62	4.05	8.09	13.9	21.7	31.6	43.9

TABLE C9.14 (IP) Minimum Refrigeration Capacity in Tons for Oil Entrainment up Hot-Gas Risers (Type L Copper Tubing) *(Continued)*

Refrigerant	Saturated temp., °F	Discharge gas temp., °F	Pipe OD, in											
			½	⅝	¾	⅞	1-⅛	1-⅜	1-⅝	2-⅛	2-⅝	3-⅛	3-⅝	4-⅛
			Area, in^2											
			0.146	0.233	0.348	0.484	0.825	1.256	1.780	3.094	4.770	6.812	9.213	11.970
134a	100.0	130.0	0.206	0.372	0.600	0.926	1.80	3.05	4.71	9.42	16.2	25.2	36.8	51.1
		160.0	0.188	0.340	0.549	0.848	1.65	2.79	4.31	8.62	14.8	23.1	33.7	46.8
		190.0	0.180	0.326	0.526	0.811	1.58	2.67	4.13	8.25	14.2	22.1	32.2	44.8
	110.0	140.0	0.209	0.378	0.610	0.942	1.83	3.10	4.79	9.57	16.5	25.7	37.4	52.0
		170.0	0.191	0.346	0.558	0.861	1.68	2.84	4.38	8.76	15.0	23.5	34.2	47.5
		200.0	0.183	0.331	0.534	0.824	1.61	2.72	4.19	8.38	14.4	22.5	32.8	45.5
	120.0	150.0	0.212	0.383	0.618	0.953	1.86	3.14	4.85	9.69	16.7	26.0	37.9	52.6
		180.0	0.194	0.351	0.566	0.873	1.70	2.88	4.44	8.88	15.3	23.8	34.7	48.2
		210.0	0.184	0.334	0.538	0.830	1.62	2.74	4.23	8.44	14.5	22.6	33.0	45.8
502	80.0	110.0	0.192	0.344	0.567	0.857	1.67	2.82	4.36	8.71	15.0	23.4	34.1	47.3
		140.0	0.180	0.323	0.534	0.806	1.57	2.66	4.11	8.20	14.1	22.0	32.1	44.5
		170.0	0.173	0.310	0.512	0.773	1.50	2.54	3.94	7.85	13.5	21.1	30.7	42.8
	90.0	120.0	0.194	0.348	0.574	0.867	1.69	2.85	4.41	8.81	15.1	23.6	34.5	47.8
		150.0	0.182	0.326	0.538	0.813	1.58	2.68	4.14	8.26	14.2	22.2	32.3	44.8
		180.0	0.169	0.303	0.501	0.756	1.47	2.49	3.85	7.69	13.2	20.6	30.1	41.7
	100.0	130.0	0.194	0.348	0.575	0.869	1.69	2.86	4.42	8.83	15.2	23.7	34.5	47.9
		160.0	0.182	0.326	0.539	0.813	1.58	2.68	4.14	8.27	14.2	22.2	32.3	44.9
		190.0	0.170	0.304	0.503	0.739	1.48	2.50	3.87	7.71	13.3	20.7	30.2	41.9
	110.0	140.0	0.170	0.305	0.504	0.761	1.48	2.51	3.87	7.73	13.3	20.7	30.2	42.0
		170.0	0.162	0.291	0.481	0.726	1.41	2.39	3.70	7.38	12.7	19.8	28.9	40.1
		200.0	0.152	0.273	0.450	0.680	1.33	2.24	3.46	6.92	11.9	18.5	27.0	37.5
	120.0	150.0	0.170	0.305	0.503	0.760	1.48	2.50	3.87	7.73	13.3	20.7	30.2	41.9
		180.0	0.153	0.275	0.453	0.683	1.33	2.26	3.49	6.96	12.0	18.7	27.2	37.8
		210.0	0.149	0.267	0.440	0.665	1.30	2.19	3.39	6.76	11.6	18.1	26.4	36.7

Notes:

1. Refrigeration capacity in tons is based on a saturated suction temperature of 20°F with 15°F superheat at the indicated saturated condensing temperature with 15°F subcooling. For other saturated suction temperatures with 15°F superheat, use the correction factors in the table to the right.
2. This table has been computed using an ISO 32 mineral oil for R-22 and R-502. R-134a has been computed using an ISO 32 ester-based oil.

Refrigerant	Saturated suction temperature, °F			
	−40	−20	0	+40
22	0.92	0.95	0.97	1.02
134a	—	—	0.96	1.04
502	0.85	0.91	0.95	1.04

TABLE C9.14 (SI) Minimum Refrigeration Capacity in Kilowatts for Oil Entrainment up Hot-Gas Risers (Copper Tubing, ASTM B88M, Type B, Metric Size)

Refrigerant	Saturated discharge temp., °C	Discharge gas temp., °C	Tubing diameter, nominal OD, mm											
			12	15	18	22	28	35	42	54	67	79	105	130
134a	20.0	60.0	0.469	0.860	1.445	2.462	4.681	8.305	13.408	25.709	44.469	67.396	139.050	240.718
		70.0	0.441	0.808	1.358	2.314	4.399	7.805	12.600	24.159	41.788	63.334	130.668	226.207
		80.0	0.431	0.790	1.327	2.261	4.298	7.626	12.311	23.605	40.830	61.881	127.671	221.020
134a	30.0	70.0	0.493	0.904	1.519	2.587	4.918	8.726	14.087	27.011	46.722	70.812	145.096	252.916
		80.0	0.463	0.849	1.426	2.430	4.260	8.196	13.232	25.371	43.885	66.512	137.225	237.560
		90.0	0.452	0.829	1.393	2.374	4.513	8.007	12.926	24.785	42.870	64.974	134.052	232.066
134a	40.0	80.0	0.507	0.930	1.563	2.662	5.061	8.979	14.496	27.794	48.075	72.863	150.328	260.242
		90.0	0.477	0.874	1.469	2.502	4.756	8.439	13.624	26.122	45.184	68.480	141.285	244.588
		100.0	0.465	0.852	1.432	2.439	4.637	8.227	13.281	25.466	44.048	66.759	137.735	238.443
134a	50.0	90.0	0.510	0.936	1.573	2.679	5.093	9.037	14.589	27.973	48.385	73.332	151.296	261.918
		100.0	0.479	0.878	1.476	2.514	4.779	8.480	13.690	26.248	45.402	68.811	141.969	245.772
		110.0	0.467	0.857	1.441	2.454	4.665	8.278	13.364	25.624	44.322	67.173	138.590	239.921
22	20	60	0.563	0.032	0.735	2.956	5.619	9.969	16.094	30.859	43.377	80.897	116.904	288.938
		70	0.549	1.006	1.691	2.881	5.477	9.717	15.687	30.078	52.027	48.851	162.682	281.630
		80	0.535	0.982	1.650	2.811	5.343	9.480	15.305	29.346	50.761	76.933	158.726	173.780
22	30	70	0.596	1.092	1.836	3.127	5.945	10.547	17.028	32.649	56.474	85.591	176.588	305.702
		80	0.579	1.062	1.785	3.040	5.779	10.254	16.554	31.740	54.901	83.208	171.671	297.190
		90	0.565	0.035	1.740	2.964	5.635	9.998	16.140	30.948	53.531	81.131	167.386	289.773
22	40	80	0.618	1.132	1.903	3.242	6.163	10.934	17.653	33.847	58.546	88.732	183.069	316.922
		90	0.601	1.103	1.853	3.157	6.001	10.647	17.189	32.959	47.009	86.403	178.263	308.603
		100	0.584	1.071	1.800	3.067	5.830	10.343	16.698	32.018	55.382	83.936	173.173	299.791
22	50	90	0.630	1.156	1.943	3.310	6.291	11.162	18.020	34.552	59.766	90.580	186.882	323.523
		100	0.611	1.121	1.884	3.209	6.100	10.823	17.473	33.503	57.951	87.831	181.209	313.702
		110	0.595	1.092	1.834	3.125	5.941	10.540	17.016	32.627	56.435	85.532	176.467	305.493

TABLE C9.14 (SI) Minimum Refrigeration Capacity in Kilowatts for Oil Entrainment up Hot-Gas Risers (Copper Tubing, ASTM B88M, Type B, Metric Size) *(Continued)*

Refrigerant	Saturated discharge temp., °C	Discharge gas temp., °C	Tubing diameter, nominal OD, mm											
			12	15	18	22	28	35	42	54	67	79	105	130
502	20	60	0.453	0.831	1.397	2.380	4.524	8.027	12.959	24.848	42.980	65.141	134.396	232.661
		70	0.440	0.807	1.357	2.311	4.393	7.795	12.585	24.130	41.737	63.257	130.509	225.933
		80	0.429	0.788	1.324	2.255	4.286	7.605	12.278	23.542	40.720	61.715	127.329	220.427
502	30	70	0.459	0.841	1.414	2.409	4.580	8.125	13.118	25.152	43.506	65.937	136.038	235.504
		80	0.446	0.818	1.375	2.343	4.454	7.902	12.757	24.461	42.311	54.126	132.302	229.036
		90	0.435	0.798	1.341	2.285	4.343	7.706	12.441	23.854	41.260	62.534	129.017	233.350
502	40	80	0.451	0.827	1.389	2.367	4.499	7.983	12.888	24.711	42.743	64.780	133.652	231.374
		90	0.439	0.804	1.352	2.303	4.378	7.767	12.540	24.044	41.589	63.031	130.044	225.127
		100	0.427	0.783	1.316	2.241	4.260	7.559	12.203	23.398	40.472	61.340	126.554	219.085
502	50	90	0.432	0.791	1.330	2.266	4.307	7.641	12.336	23.652	40.912	62.006	127.927	221.463
		100	0.418	0.767	1.289	2.196	4.174	7.406	11.956	22.925	39.654	60.100	123.996	214.657
		110	0.406	0.745	1.253	2.134	2.056	7.197	11.619	22.279	38.536	58.404	120.498	208.602

Notes:

1. Refrigeration capacities in kilowatts are based on saturated evaporator at −5°C, and condensing temperature as shown in table. For other liquid line temperatures, use correction factors in the table below.

Refrigerant	Saturated suction temperature, °C				
	−50	−40	−30	−20	+5
22	0.87	0.90	0.93	0.96	1.02
502	0.77	0.83	0.88	0.93	1.04
	0		5		10
134a	1.02		1.04		1.06

2. These tables have been computed using an ISO 32 mineral oil for R-22 and R-502. R-134a has been computed using an ISO 32 ester-based oil.

Sizing Data for Oil Return in Discharge or Suction Lines with Flow Vertically Upward

Saturation temperature, °C	Line size, DN 50 or less	Line size, above DN 50
−18	80 Pa/m	45 Pa/m
−46	100 Pa/m	57 Pa/m

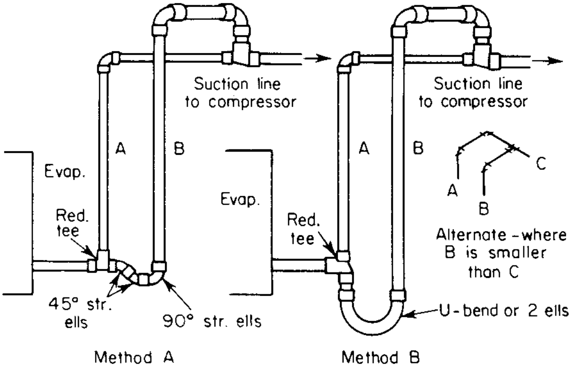

FIGURE C9.7 Double suction riser construction. *(Courtesy Carrier Air Conditioning Co.)*

practiced by equipping accumulators with oil stills and pumps that operate on demand from oil level controls to transfer oil to individual compressor packages.

Suction Line Design for Oil Return. Suction lines should be designed so that oil from an active evaporator does not drain into an idle one. Various multiple coil arrangements are shown in Figs. C9.8*a, b, c,* and *d.*

Figure C9.8*a* shows multiple evaporators on different floor levels, with the suction line above. Each suction line is brought upward and looped into the top of the common suction line to prevent oil from draining into inactive coils. Figure C9.8*b* shows multiple stacked coils on the same level, with the suction line above, using an alternative double riser method.

Figure C9.8*c* shows multiple coils on the same level, with the suction line below. Figure C9.8*d* shows multiple coils on the same level, with the suction line above.

In all cases that use thermostatic expansion valves, the control bulbs are located upstream of the liquid traps or the elbows which turn down, as illustrated in Fig. C9.9. This prevents erratic operation that may be caused by liquid holdup during compressor-off cycles.

Condenser Drains. In the section on selection of line sizes, liquid lines were sized on the basis of about 100 fpm (0.5 m/s). When liquid lines run vertically downward from the bottom of a horizontal shell-and-tube or shell-and-coil condenser to a receiver and where full equalization of the condenser and receiver is required through the condensate drain line, it may be necessary to maintain velocities less than 100 fpm (0.5 m/s). Table C9.15 shows the maximum velocity based on full pipe area which should be allowed in vertical outlets from condensers to assure full equalization and to prevent gas binding. This table is equally applicable to pipe or copper tubing, and is applicable to any refrigerant compatible with the materials, since it is based on the hydraulic effect of liquid flowing into vertical outlets. If the velocities exceed those shown in this table, separate vapor-equalizing lines should be used.

Marine Condensers. Refrigerant condensers for use on land usually have a single liquid outlet. Condensers intended for use on shipboard are usually mounted fore

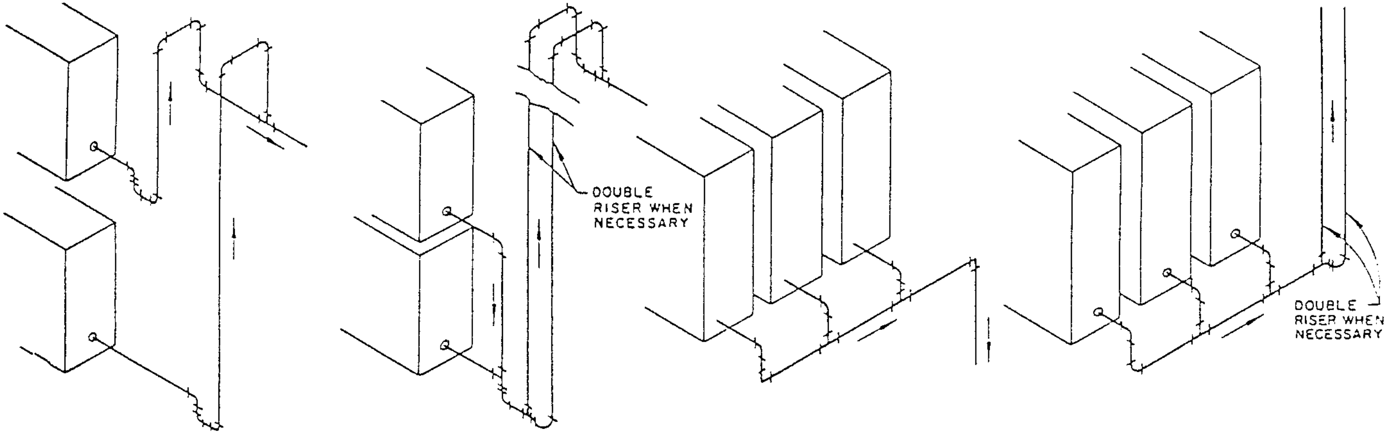
DOUBLE RISER WHEN NECESSARY
DOUBLE RISER WHEN NECESSARY

A
MULTIPLE EVAPORATORS ON DIFFERENT LEVELS– COMPRESSOR ABOVE

B
ALTERNATE FOR MULTIPLE EVAPORATORS STACKED ON SAME LEVEL– COMPRESSOR ABOVE ARRANGEMENT A PREFFRRED

C
MULTIPLE EVAPORATORS ON SAME LEVEL– COMPRESSOR BELOW

D
MULTIPLE EVAPORATORS ON SAME LEVEL– COMPRESSOR ABOVE

[a] A pumpdown cycle is recommended with all arrangements shown.

FIGURE C9.8 Arrangements of suction line loops.

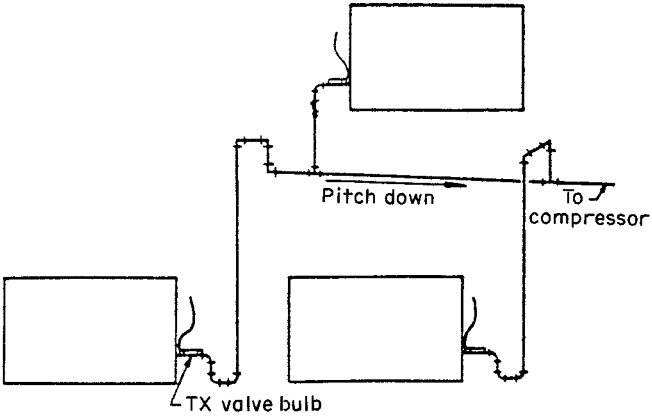

FIGURE C9.9 Typical piping from evaporators located above and below common suction line.

and aft to take advantage of the lower pitch angle. Outlets are provided at each end of the condenser. These are piped into a common header having a single outlet in the center. Each condenser outlet should be capable of handling the entire full capacity of the condenser.

Insulation. Since refrigerating systems are designed basically to produce temperatures below normal, many of the pipelines in a refrigeration system will be at temperatures below the dew point of the surrounding air. In addition to a heat gain from the surroundings, condensation, commonly called *sweating,* will form on

TABLE C9.15 Maximum Velocity in Condenser Vertical Drains to Assure Equalization

Inside diameter, in	Inside diameter, mm	Max. velocity, fpm	(m/s)
1	25	45.5	0.231
2	51	63.8	0.324
3	76	77.8	0.395
4	102	89.1	0.453
5	127	99.7	0.507
6	152	109.3	0.555
8	203	125.4	0.637
10	254	140.5	0.714
12	305	153.8	0.781

Table shows maximum velocity permitted in round vertical drains, based on full pipe area, to assure full equalization with receiver.

Based on the formula: Velocity (fpm) $= 44.4\sqrt{d}$ where d is in inches ($0.04475\sqrt{d}$ where d is in mm).

these pipes. The condensation may be objectionable and even harmful. It is customary to insulate all refrigerant lines where there is a possibility of condensation on the refrigerant line.

The amount and type of insulation depend upon the operating-temperature level. Chapter B7 covers insulation in detail with recommendations for economical thicknesses, types, and application.

An important consideration in the application of any insulation to refrigerant piping is to assure that there is a vapor seal on the outside of the insulation. If the insulation type is such that moisture can enter it, the natural difference in vapor pressure between the surrounding atmosphere and the surface of the pipe will result in moisture migration into the insulation and eventually to the surface of the pipe. Vapor seals at all joints and on the outside of the insulation are essential to assure efficient performance and the avoidance of future trouble.

It is also necessary to avoid thermal bridges between the cold piping and the outside ambient air or atmosphere. Pipe hangers for supports should not contact the cold piping and should be arranged so that the supports bear against saddles of adequate area which are outside the insulation. Any metal in contact with the cold pipe wall, because of the higher conductivity of the metal hanger or rod, will cause condensation on the hangers.

MECHANICAL PIPING DESIGN

Code Requirements

The Safety Code for Mechanical Refrigeration, ANSI/ASHRAE 15[1], was written to assure the safe design, construction, installation, operation, and inspection of every refrigerating system using a volatile refrigerant. ANSI/ASHRAE 15 Standard covers refrigerant piping, valves, fittings, and related parts.

The ASME Code for Pressure Piping, Section B31.5,[2] is a standard covering the minimum requirements for materials, design, fabrication, assembly, examination, inspection, and testing of refrigeration piping, including limitations.

The ANSI/ASHRAE 15 and ASME B31.5 Codes recognize that refrigeration equipment of the self-contained or unit type which has been designed in accordance with good practice and which has been submitted to an approved, nationally recognized testing laboratory which provides uniform testing and examination procedures and which has a follow-up inspection service of current production of such units will be construed as meeting the requirements of either of these codes.

The ASME B31.5 Code also excludes water piping from consideration but does include secondary coolant piping.

Materials. Since volatile refrigerants have different chemical compositions, some materials are incompatible with certain refrigerants. Table C9.16 shows that several common materials are not compatible with certain of the refrigerants; it also indicates certain other limitations from a code standpoint. It will be noted that cast-iron pipe is not permitted by the Pressure Piping Code for any volatile refrigerant; case-iron valves and fittings of approved types are permitted.

Copper and brass are not compatible with ammonia. Aluminum, zinc, and magnesium are not suitable for use with methyl chloride. Zinc and magnesium are not suitable for use with any of the halogenated hydrocarbon refrigerants or ammonia.

In addition to the limitations and qualifications shown in Table C9.16, each of

TABLE C9.16 Material Compatibility

Material	Refrigerant number 22	134a	290	All 400's	All 500's	717	744
Carbon steel	S*	S	S	S	S	S	S
Wrought iron	S	S	S	S	S	S	S
Cast-iron pipe	NP*	NP	NP	NP	NP	NP	NP
Copper or brass	S	S	S	S	S	NS	S
Aluminum	Q*	Q	Q	Q	Q	Q	NS
Zinc	NS*	NS	NS	NS	NS	NS	NS
Magnesium	NS	NS	NS	NS	NS	NS	NS
ASHRAE 15-94 group	A1	A1	A1	A1	A1	B2	A1

* NP, not permitted by ASME B31.5 Code; NS, not satisfactory; Q, qualified—moist refrigerant may corrode—consult supplier; S, satisfactory.

the eight listed refrigerants is classified according to the Underwriters' Laboratories classification and according to a group classification system covered in the ANSI/ ASHRAE 15 Safety Code.

The ANSI/ASHRAE 15 classification of Groups A1 and B1 include refrigerants which are not considered flammable toxic or in the ordinary sense (remember that many refrigerants can smother if present in heavy concentrations).

Groups A2 and B2 in the ASHRAE classification cover flammable or toxic refrigerants, and GROUPS A3 and B2 cover highly flammable or explosive refrigerants.

Limitations. Table C9.17 shows the limitations of various types of materials and group classifications with respect to the service with refrigerants. It will be noted that steel pipe must be Sch 40 or heavier for use with volatile refrigerants, with certain limitations with respect to size.

ASME B31.5 no longer permits the use of butt-welded carbon steel with refrigerants. However, it does permit the use of listed electric-resistance welded pipe and tube.

Cast-iron pipe is not allowed for any volatile, flammable, or toxic refrigerant but may be used for water or nonvolatile brines. Cast-iron is not allowed for temperatures below −150°F (−65°C).

Copper or brass tubing may be used with any refrigerant with which it is compatible and in any size or pressure when selected by the design rules. If copper tubing is erected on the premises, it must be Type *K*, *L*, or ACR.

The ANSI/ASHRAE 15 Safety Code has certain requirements for institutional, public assembly, residential, and commercial occupancies. These rules prohibit the carrying of refrigerant piping through floors except that it may be carried from the basement to the first floor or from the top floor to a machinery penthouse to the roof.

Refrigerant piping may be connected to a condenser on the roof if it is carried through an approved rigid and tight, continuous, fire-resistant pipe duct or shaft having no openings on intermediate floors, or it may be carried on the outer wall of the building provided it is not located in an air shaft, closed court, or any other similar opening enclosed within the outer walls of the building.

For Group A1 refrigerants, the refrigerant piping may be carried through floors intermediate between the first floor and the top floor provided it is enclosed in an

TABLE C9.17 Piping Limitations

Type or material	ASHRAE 15 group number	Line size NPS	Service	Limitation
Carbon steel or wrought iron	A2, B2, A3, B3	1½ or smaller	Refrigerant liquid	Sch 80 or heavier
	A1, B1	6 or smaller	Refrigerant liquid	Sch 40 or heavier
	A2, B2, A3, B3	2 through 6	Refrigerant liquid	Sch 40 or heavier
	All groups	6 or smaller	Refrigerant vapor	Sch 40 or heavier
Butt-welded carbon steel or wrought iron	Any	Any	Refrigerant liquid	Not permitted by code
Cast-iron pipe	Any	Any	Refrigerant	Not permitted for refrigerants
Cast-iron pipe	—	—	Brine	Permitted above −150°F (−65°C)
Cast-iron pipe	—	—	Any	Not permitted below −150°F (−65°C)
Copper or brass	Any (except ammonia)	Any	Any (except ammonia)	Type *K* or *L* if erected on premises; soft annealed may not exceed 1⅜ in OD (DN 32)
			Ammonia	Not compatible
Aluminum, zinc, magnesium	—	—	Methyl chloride	Not compatible
Magnesium	—	—	Halogenated hydrocarbons	Not compatible
Threaded joints	A3, B3	1 and smaller	Any	Seal welded or braze
		See limitation	Group A3 or B3 fluids	Not allowed over 1 in (DN 25)
			Salt brines	Not allowed over 6 in (DN 150)
			Any	Not lighter than Sch 40 up through 6 in (DN 150); not lighter than Sch 30 on 8, 10, or 12 in (DN 200, 250, 300)

approved, rigid and tight, continuous fire-resisting pipe or shaft where it passes through intermediate spaces not served by the system. The piping of direct systems need not be enclosed where it passes through space served by that system. The pipe duct or shaft must be vented to the outside or to a space served by the system.

The ANSI/ASHRAE 15 Code further requires rigid or flexible metal enclosures for soft, annealed copper tubing used for refrigerant piping which contains other than Group A1 refrigerants.

Schedule 40 wrought-steel or wrought-iron pipe may be used for design working pressure not exceeding 300 psig (2100 KPa) provided electric-resistance-welded, or seamless pipe is used.

For limitations on copper tubing, refer to ANSI/ASHRAE 15.

Joints on copper tubing containing Groups A2, A3, B1, B2 and B3 refrigerants as classified by the ANSI/ASHRAE 15 Code must be brazed. Solder joints are prohibited in such systems.

A brazed joint is obtained by the joining of metal parts with alloys which melt at temperatures higher than 800°F (425°C) but less than the melting temperatures of the joined parts.

A soldered joint is obtained by the joining of metal parts with metallic mixtures or alloys which melt at temperatures below 800 (below 425 and above 200°C) and above 400°F.

Systems containing 100 lb (45 kg) of refrigerant with positive-displacement compressors should have stop valves on each inlet of each liquid receiver and on each branch liquid and suction line except on receivers which are in a condensing unit or which are an integral part of the condenser.

Refrigerant piping crossing an open space which affords a passage way in any building must be not less than 7½ ft (2.3 m) above the floor unless against a ceiling of such space.

Free passageway must not be obstructed by refrigerant piping. Refrigerant piping must not be placed in any elevator, dumb-waiter, or other shaft containing a moving object or any shaft which has openings to living quarters or to main exit hallways. Refrigerant piping is not to be placed in public hallways, lobbies, or stairways except that such refrigerant piping may pass along a public hallway if there are no joints in the section in the public hallway and provided that nonferrous tubing of 1⅛ in OD and smaller is contained in a rigid metal pipe.

Limitations on Threaded Joints. Threaded joints should be seal welded or brazed for refrigerants. Threaded joints larger than NPS 1 (DN 25) in size should not be used for Group A3 and B3 fluids and must be no larger than NPS 6 (DN 150) in size for salt brine. Threaded joints must not be used on lighter than Sch 40 pipe up through NPS 6 (DN 150) in diameter or on lighter than Sch 30 pipe for NPS 8-, 10-, or 12 pipe (DN 200, 250, 300).

Design Pressures

Minimum design pressures for refrigerants are defined in the ANSI/ASHRAE-15 Safety Code as not less than pressure arising under maximum operating, standby, or shipping conditions, but not less than the saturated gauge pressure corresponding to certain specified temperatures. See Table C9.18 for minimum design gauge pressures of 9 refrigerants. Design pressures in other codes, as typified by the Safety Requirements in ISO-5149[6], specify higher temperatures than are used in the ANSI standards. The notes under the table explain the temperature basis for the minimum

TABLE C9.18 Minimum Design Gauge Pressures, psig[3]

				Low side			High side				
							Watercooled		Aircooled		
Refrigerant	Group ASHRAE	Name	Formula	80°F ANSI[1]	32°C ISO[2]	43°C ISO[3]	104°F ANSI[1]	43°C ISO[2]	122°F ANSI[1]	55°C ISO[2]	63°C ISO[3]
R-22	A1	Chlorodifluoromethane	CHCLF2	144	168	225	208	225	267	294	361
R-134a	A1	Tetrafluoroethane	CH_2FCF_3	87	104	145	133	145	177	202	247
R-290	A3	Propane	C_3H_8	129	150	198	184	198	234	262	312
R-404A	A1/A1	R-125/143a/134a	(44/52/4)	176	219	271	252	271	321	360	432
R-407A	A1/A1	R-32/125/134a	(20/40/40)	167	208	258	239	258	307	345	412
R-407C	A1/A1	R-32/125/134a	(23/25/52)	167	208	258	239	258	307	345	412
R-410A	A1/A1	R-32/125	(50/50)	236	274	363	337	363	431	485	580
R-507	A1	R-125/143a	(50/50)	180	209	292	257	292	328	369	440
R-717	B2	Ammonia	NH_3	138	165	230	210	230	280	320	392

Notes:

1. ANSI/ASHRAE-15 defines ‘‘Design Pressures’’ as not less than pressure arising under maximum operating, standby, or shipping conditions, but not less than the saturated gauge pressure corresponding to the following temperatures: For low sides, not less than 80°F (26.7°C); For water-cooled high sides, not less than 30°F (16.7°C) higher than the summer 1 percent wet-bulb, or 15°F (8.3°C) higher than the highest design leaving condensing water temperature for which the equipment is designed, or 104°F (40°C), whichever is greatest. For air cooled high sides, 30°F (16.7°C) higher than the highest summer 1 percent design dry-bulb for the location but not lower than 122°F (50°C).
2. ISO-5149 defines the pressures for systems only protected by pressure limiting devices, as the pressure of the refrigerant having at least the following temperatures: For ambient temperatures up to 32°C (89.6°F): 32°C (89.6°F) low side, 43°C (109.4°F) water-cooled high side, 55°C (131°F) air cooled high side.
3. ISO-5149 defines the pressures for ambient temperatures up to 43°C (109.4°F): 43°C (109.4°F) low side, 43°C (109.4°F) water cooled high side, 63°C (145.4°F) air cooled high side.
4. The gauge pressures shown in psig are minimums. To convert to kPa gauge, multiply by 6.89474.

TABLE C9.19 Suggested Minimum Field Test Pressure for Refrigerant Piping, psig

Refrigerant	Group	Name	Formula	Low side	High side water-cooled	High side air-cooled
R-22	A1	Chlorodifluoromethane	CHCLF2	185	250	325
R-134a	A1	Tetrafluoroethane	CH_2FCF_3	115	160	225
R-290	A3	Propane	C_3H_8	165	220	290
R-404A	A1/A1	R-125/143a/134a	(44/52/4)	240	300	400
R-407A	A1/A1	R-32/125/134a	(20/40/40)	230	285	380
R-407C	A1/A1	R-32/125/134a	(23/25/52)	230	285	380
R-410A	A1/A1	R-32/125	(50/50)	300	400	535
R-507A	A1	R-125/143a	(50/50)	230	325	405
R-717	B2	Ammonia	NH_3	200	275	385

Notes:

1. The suggested field test pressures are approximately 110 percent of the ISO minimum design pressures in Table C9.18 for all refrigerants, except approximately 120 percent of the ISO minimum design pressure for ammonia.
2. Most safety and jurisdictional mechanical codes no longer speficy field test pressures. The field test pressure should follow the manufacturer or designer's specification, or be guided by performance codes such as IIAR-2 for ammonia systems, or be adjusted to not more than 130 percent of the nameplate pressure rating of any components in the parts of the system being tested.
3. When not otherwise specified, the minimum suggested field test pressure is 110 percent of the design or maximum working pressure, so as to test the system at the rated operating pressure of the safety relief valve.
4. The gauge pressures are shown in psig. To convert to kPa gauge, multiply by 6.89474.

low-side and high-side pressures. The refrigeration industry in the United States usually designs to higher pressures than specified in ANSI codes. The principal reason for this practice is to provide safety relief valve set points at design pressures that are 25 percent higher than the maximum expected pressure. This practice enhances adequate closing pressure in conventional spring-loaded safety relief valves. System internal pressures within 90 percent of the set point can cause weeping or leaking of refrigerants from conventional relief valves.

The new International Mechanical Code which is replacing juridictional codes, references ANSI/ASHRAE-15 for safety requirements and references ANSI/IIAR-2 for equipment and design of ammonia refrigerating systems. There are no specified field test pressures in the International Mechanical Code. Table C9.19 lists suggested minimum field test pressure for refrigerating piping.

REQUIRED THICKNESS OF PIPE OR TUBE

The *required thickness* of pipe or tubing is determined from the following equations and nomenclature:

$$t_m = t + c \tag{C9.8}$$

$$t = \frac{PD_o}{2(S + Py)} = \frac{Pd}{2(S + Py - P)} \tag{C9.9}$$

$$P = \frac{2St}{(D_o - 2yt)} \tag{C9.10}$$

where t_m = minimum required thickness (in) (mm)
c = allowance for grooves, threads, tolerances, corrosion, erosion (in) (mm)
P = internal design pressure (psig)(kPa gauge)
D_o = outside diameter of pipe (in) (mm)
d = inside diameter of pipe (in) (mm)
S = allowable stress (psi) (kPa)
t = calculated thickness in (mm)

y is a material coefficient for which

Ductile nonferrous materials = 0.4

Ferritic steels = 0.4

Austenitic steels = 0.4

The design of piping for external pressure involves the use of charts to determine factors which are used to calculate the thickness or allowable working pressure. The method and charts referred to in paragraphs UG 28 and UG 31 of Section VIII of the ASME Boiler and Pressure Vessel Code[3] are acceptable for design of pipes and tubes subject to external pressure.

The Pressure Piping Code recognizes and permits the use of the design rules of the ASME Unfired Pressure Vessel Code for closures, flanges, and blind flanges. For blanks, the following equation should be used:

$$t = d_g \sqrt{3P/16S}$$

where t = required thickness (in) (mm)
d_g = inside diameter of gasket for raised or flat-face flanges or the pitch diameter of retained gasket flanges (in) (mm)
P = internal or external design pressure (psig) (kPa)
S = allowable stress (psi) (kPa)

Since the Pressure Piping Code[2] and the Safety Code for Mechanical Refrigeration both limit the minimum thickness of steel pipe and the minimum thickness for copper tubing for erection on the premises, it is possible to calculate the maximum working pressure for these commonly used weights of pipe or tubing.

Table C9.20 shows the maximum allowable internal working pressure for seamless steel pipe in the permitted schedule numbers. The maximum allowable external pressure has also been calculated for a length-over-diameter ratio in excess of 15 which will be common in most piping systems. It will be evident that the allowable working pressure for the permitted thicknesses of pipe is usually far in excess of that required by the design working pressure requirements for the various refrigerants. In most cases except in unusual circumstances, in cases where shock may be anticipated, or in the larger sizes, no further checking of allowable working pressure will be necessary.

Table C9.21 shows rated internal working pressures for type ACR copper tubing normally used for air conditioning and refrigeration service in the field. Ratings are given for annealed tubing.

The ASME B31.5 Pressure Piping Code establishes certain allowable working stresses for many grades of pipe and tubing in various materials. These allowable stresses are to be used in conjunction with the design equations listed above for special calculations.

TABLE C9.20 Allowable Working Pressures for Carbon Steel Refrigerant Piping

Nominal pipe size, NPS	(DN)	Schedule no.	Allowable internal working pressure, psig	Allowable external working pressure, psig
⅛	(3)	40	1,890	2,070
		80	3,510	2,860
¼	(6)	40	1,490	2,000
		80	2,880	2,700
⅜	(10)	40	1,300	1,660
		80	2,500	2,280
½	(15)	40	1,126	1,580
		80	2,210	2,140
¾	(20)	40	994	1,320
		80	1,890	1,800
1	(25)	40	866	1,210
		80	1,680	1,670
1¼	(32)	40	773	980
		80	1,470	1,410
1½	(40)	40	740	890
		80	1,390	1,270
2	(50)	40	670	750
2½	(65)	40	665	810
3	(80)	40	624	700
3½	(90)	40	600	640
4	(100)	40	580	580
6	(150)	40	534	450
8	(200)	40	515	390
10	(250)	40	496	340
12	(300)	STD.	436	260

For internal pressure:

Based on minimum wall thickness; no corrosion or erosion allowance: thread allowance factor from ANSI/ASME B.1.201.

Allowable stress = 12,000 psi.

y (material coefficient) = 0.4.

$P = 2St/(D_0 - 2yt)$.

For external pressure:

Based on minimum wall thickness: no corrosion, erosion, threading, or grooving allowance.

Yield: 24,000 psi to 30,000 psi.

$L/D_o = 15$ or greater where D_o = outside pipe diameter in inches; L = maximum straight length of run between flanges, elbows, caps or stiffening rings (in).

To convert psig to kPa gauge, multiply by 6.89474.

Low-Temperature Design Criteria. It is recognized that certain materials tend to become brittle at low temperatures and may be subject to failure which would not occur normally at usual temperatures or at elevated temperatures. The transition temperature at which certain materials become brittle is not well defined. Some ferrous materials may pass through the transition range at normal temperatures, while others may not become brittle until quite low temperatures are attained. The ASME Unfired Pressure Vessel Code[3] arbitrarily establishes a temperature of −20°F as a point below which all vessels constructed of carbon or low-alloy steels should be impact tested, with certain exemptions.

Refrigeration piping is frequently subject to temperatures below normal atmospheric temperatures to the degree that embrittlement may occur, and the ASME

TABLE C9.21 Rated Internal Working Pressures (psig) for Copper Tube Type ACR*

Size and wall thickness (in)	Rated internal working pressure (psig)						
	100°F (38°C)		200°F (93°C)		300°F (149°C)		400°F (204°C)
	Annealed	Drawn	Annealed	Drawn	Annealed	Drawn	Annealed or drawn
⅛ (.030)	3130	—	3090	—	2620	—	1310
³⁄₁₆ (.030)	1990	—	1950	—	1650	—	820
¼ (.030)	1450	—	1420	—	1200	—	600
¹⁵⁄₁₆ (.032)	1230	—	1200	—	1020	—	510
⅜ (.030)	900	1350	880	1300	740	1180	370
⅜ (.032)	1010	—	990	—	840	—	420
½ (.032)	740	—	730	—	610	—	300
½ (.035)	800	1200	780	1150	660	1060	330
⅝ (.035)	640	—	630	—	530	—	260
⅝ (.040)	740	1110	720	1060	610	980	300
¾ (.042)	650	980	630	930	530	850	260
⅞ (.045)	590	890	570	840	480	770	240
1⅛ (.050)	510	770	490	720	420	670	210
1⅜ (.055)	460	690	440	650	370	590	180
1⅝ (.060)	430	650	410	600	350	560	170
2⅛ (.070)	370	560	360	530	300	480	150
2⅝ (.080)	350	530	340	500	280	450	140
3⅛ (.090)	330	500	320	470	270	430	130
3⅝ (.100)	320	480	300	440	260	420	130
4⅛ (.110)	300	450	290	430	240	380	120

Based on *S* values as follows: 100°F—6,000 psi, annealed; 9,000 psi, drawn; 200°F—5,900 psi; annealed, 8,700 psi drawn; 300°F—5,000 psi, annealed, 8,000 psi, drawn; 400°F—2,500 psi, annealed or drawn, according to American National Standard Code for Pressure Piping, Refrigeration Piping, ANSI B31.5.

Source: Copper Development Association, Inc.

To convert inches to mm, multiply by 25.4.

To convert psig to kPa, multiply by 6.89474.

B31.5 Piping Code also requires impact tests on certain materias subject to temperature below −20°F. There are certain materials and certain conditions under which impact tests are not required. The exemptions are as follows:[2]

1. No impact tests are required for aluminum, austenitic stainless steel in grades 304, CF8, 304L, CF3, 316, CF8M, or 321, or copper, red brass, copper-nickel alloys, or nickel-copper alloys.
2. No impact tests are required for bolting material conforming with A193, Grade B7 for use at temperatures above −50°F.
3. No impact tests are required for bolting materials conforming with A320, Grades L7, L10, and L43 at temperatures above −150°F or above −225°F for A320, Grade L9.
4. No impact test is required for material used in fabricating a piping system for metal temperatures between −20 and −150°F when the most severe condition of pressure (internal if above atmospheric and external if below atmospheric) does not produce a stress exceeding 40% of the allowable material stress.

For low-temperature application, the use of nonferrous materials or the stainless steel mentioned will normally be satisfactory. The use of nickel-steel pipe in conjunction with the use of nickel-steel pressure vessels has long been an acceptable material for low-temperature when these materials are subjected to and pass the impact-testing requirements.

Impact tests, when conducted, shall follow the requirements of ASME B31.5, Paragraph 523.2.2.

The standard 10- by 10-mm specimen is used if the thickness of the material being tested is 7⁄16 in or greater. For material that is not of sufficient thickness to permit preparation of full-size specimens, tests may be made on the largest possible of the subsize specimens listed in the following table.

The impact properties for each size specimen are as follows:

Size of specimen (mm)	Minimum impact value required (ft · lb)	(J)
10 × 10	15	20.3
10 × 7.5	12.5	16.9
10 × 5	10	13.6
10 × 2.5	5	6.8

In welded fabrication, the weld also is required to meet the impact-test requirement.

Expansion and Contraction. Since refrigeration piping systems are subject to changes in temperature, some precautions must be taken to assure that these changes in temperature during operation or during shutdown are considered in the design of the piping and in the design of supports and flexibility.

Piping systems must be designed to have sufficient flexibility to prevent thermal expansion from causing

1. Failure of piping or anchors from overstress or overstrain
2. Leakage at joints
3. Detrimental distortion of connected equipment resulting from excessive thrusts or moments

Expansion strains are usually taken up by bending or torsion or by compression and tension. The concentration of stresses will be different in each case.

Bending or torsional flexibility may be provided by the use of bends, loops, or offsets. While swivel joints, ball joints, and corrugated expansion joints are recognized by the Pressure Piping Code, some of these are not considered desirable for volatile refrigerant piping. Bends, loops, and offsets are generally used to provide flexibility. Loops and cold springing also may be used in the design of piping. Chapter B4 covers in detail the general design considerations involved in expansion and flexibility of piping. These same principles must be applied to refrigeration piping, and the maximum temperature cycle involved in the installation should be taken into account in determining the nature and direction of the stresses which may be caused by temperature effects. As previously mentioned under ‘‘Insulation,’’ pipe hangers or supports for low-temperature piping normally will not be in direct contact with the metal portion of the piping. Consideration must be given to the insulation in types of support which are peculiar to refrigeration piping when the problems of expansion and flexibility are considered.

Miter Joints. The ASME B31.5 Pressure Piping Code gives details for design of branch connections where the angle between the axes of the branch and of the run is between 45 and 90°. Branch connections less than 45° impose special design and fabrication problems. The Code permits connections to be made by the use of tees and welding outlet fittings such as cast or forged nozzles or couplings, or by attaching a branch pipe directly to the run pipe by welding.

Normally the use of standard forged fittings of the butt-welding or socket types will provide sufficient strength in the case of a branch connection to permit application of these fittings without additional reinforcement. However, when a branch connection is welded into a hole cut into the main-run pipe, it is recognized that certain reinforcement may be required. The analysis of the extent of reinforcement, if required, is similar to that used on unfired pressure vessels for nozzle connections. The complete detailed analysis for such determinations and the means of determining the amount of reinforcement required are shown in the ASME B31.5 Pressure Piping Code or in the ASME Unfired Pressure Vessel Code. The general method is to calculate the amount of metal cut out of the pipe and to calculate the amount of metal which is added by extra thickness of the pipe wall over that required for strength, the extra metal in the nozzle or branch connection, and the extra metal which would be added within certain limiting geometric zones by welding. If the added metal provides the equivalent of the amount of metal which had been cut out, no additional reinforcement is necessary. Reinforcement metal usually is provided in the form of a ring or a saddle which is welded to the run pipe. This reinforcement material must be added within certain limiting dimensions as defined by the code. The use of ribs, gussets, or clamps is permissible to stiffen the branch connection, but their areas cannot be counted as contributing to the reinforcement area.

Welding, Brazing, and Soldering. Joints in piping which is to convey volatile refrigerants are usually made by welding, brazing, or soldering. This does not exclude the use of flanged connections, which are commonly used to connect valves or control devices in refrigeration piping. Flanged connections are commonly used to connect to pressure vessels and to compressors. Couplings of the friction type with seal rings may be used for refrigerants when the materials are compatible with the refrigerant and when the pressures permit. Use of such fittings is normally confined to low-pressure refrigerants. Limitations on threaded connections have already been listed, and frequently threaded connections, where used and where permissible, will be seal welded.

Welded joints may be used in any materials for which it is possible to qualify the welding procedures, the welders, and the welding operators.

Butt welds are permitted. Usually, backing rings are used in butt-welded joints, but where it is necessary to have a smooth interior surface or where the backing ring may result in severe corrosion or erosion, the joint may be welded without backing rings provided the piping is suitably cleaned. Socket welds are permitted under the Pressure Piping Code. The Pressure Piping Code defines in detail the required weld sizes and joint arrangements which are recommended for use in welded-part construction.

The ASME Boiler and Pressure Vessel Code, Section IX, defines in detail the qualification of welding procedures and welders' performance requirements for unfired pressure vessel construction. These rules have been adopted by the Pressure

Piping Code ASME B31.5 and form part of the requirements of that Code. The welders and the procedures should be qualified to assure that their quality is in conformance with these codes.

The ANSI/ASHRAE 15 Safety Code for Mechanical Refrigeration requires brazing of certain joints. Also certain joints in restricted areas may require high-melting-point filler material. The ASME B31.5 Pressure Piping Code defines the filler metal used in brazing to be nonferrous metal or alloy having a melting point above 800°F (425°C) but below that of the metal being joined. Good practice in cleanliness of joints and the use of proper fluxes is required for brazed joints.

Brazing procedures and operators, except for socket-type capillary joints, should be qualified in accordance with the requirements of Section IX of the ASME Boiler and Pressure Vessel Code.

For soldered joints, the ASME B31.5 Code defines the solder metal to be a nonferrous metal or alloy having a melting point below 800°F (425°C) and below that of the metal being joined. Good soldering technique requires proper cleanliness and preparation of the joints, proper joint clearances, and proper heating. Procedures to be used on soldering or brazing socket type joints are outlined in ASTM B828-92.[5]

Miscellaneous Considerations

Corrosion. The ASME B31.5 Pressure Piping Code recognizes that corrosion or erosion may be factors to be considered in piping design. When corrosion or erosion is expected, an increase in wall thickness of the components above that dictated by other design requirements is to be provided consistent with the expected life of the particular piping involved. In the basic equation for calculating the pressure ratings of pipe or in determining the required wall thickness of pipe, the Pressure Piping Code requires the addition of a factor to the calculated wall thickness to result in the actual thickness required. The factor includes allowance for threading, groove depth, and manufacturers' minus tolerance plus corrosion and erosion allowances.

Corrosion allowance on the inside of piping for volatile refrigerants is not mandatory. The refrigerant is recirculating and is usually charged into the system in a commercially pure state after thorough cleaning and evacuation of the entire system. When installed in accordance with good practice, a leaktight refrigerating system will not tend to corrode and it is not customary to add corrosion allowances. It is possible, with certain of the halogenated hydrocarbon refrigerants when contaminated with noncondensible gases or with water which may leak into a system under vacuum, to have corrosive products form. On some occasions, in hermetically sealed refrigeration systems, compressor motor burnouts have resulted in formation of contaminants which also may be damaging to the inside of the system. However, these considerations are not properly part of the piping design and are usually the result of carelessness or misapplication. It is ordinarily not necessary to add corrosion allowance to volatile-refrigerant piping.

For secondary coolant piping, especially with salt brines, the consideration of possible corrosion should be kept in mind in the design of the piping system. Ordinarily standard-weight pipe for either volatile-refrigerant use or for brine piping inherently has sufficient strength so that the normal wall thickness of pipes which are used are much heavier than are required for the actual pressure service, and therefore it may not be necessary to add additional allowances for corrosion.

Fittings. The Pressure Piping Code permits the use of standard fittings, provided they are compatible with the refrigerant or fluid. The standard ratings of forged steel flanges, fittings, and similar parts may be used for refrigerant service

Bell-and-spigot fittings may be used only for water and drainage service.

Couplings made of cast, malleable, or wrought iron may not be used on pipe containing flammable or toxic fluids. Wrought-iron couplings are subject to the same limitations in temperature, stress, and service which apply to cast-iron screwed fittings.

Valves. Cast-iron gate valves and plug cocks must not be used in liquid-refrigerant lines unless consideration is given to the expansion of liquid trapped in a space when the valve is closed.

Several manufacturers make standard lines of refrigeration fittings which do not fall into the classification of ANSI Standards for forged-steel valves. These valves and fittings over long years of usage have gained acceptability and are widely used and acceptable for refrigeration service to the degree recommended by the manufacturer.

Other Factors. The Pressure Piping Code lists the following dynamic effects which should be taken into account in the design of refrigerant piping.

1. Impact forces (including hydraulic shock) caused by either external or internal conditions.
2. The effect of wind loading on exposed piping.
3. Piping systems located in regions where earthquakes are a factor are to be designated for a horizontal force in conformity with the good engineering practice using governmental data as a guide in determining the earthquake force. However, this force is not to be considered as acting concurrently with lateral wind force.
4. Piping shall be arranged and supported with consideration for vibration.

The Pressure Piping Code also calls attention to the following weight effects which should be taken into account in the design of piping:

1. Live loads such as the weight of the fluid transported and snow and ice loads if the latter will be encountered. If low-temperature piping is not insulated, there can be a buildup of ice on the pipe even in high ambient temperatures.
2. Dead loads, consisting of the weight of the piping components and insulation and other superimposed loads.
3. Test loads which consist of the weight of the test fluid in the pipe.

REFERENCES

1. ASHRAE Safety Code for Mechanical Refrigeration, ANSI/ASHRAE-15, American Society of Heating, Refrigerating and Air Conditioning Engineers, Inc., 1791 Tullie Circle NE, Atlanta, GA 30329.
2. ASME Code for Pressure Piping, Section B31.5 Refrigeration Piping, ASME International, Three Park Avenue, New York, NY 10016-5990.

3. ASME Boiler and Pressure Vessel Code, Section VIII, Unfired Pressure Vessels, ASME International, Three Park Avenue, New York, NY 10016-5990.
4. ASHRAE Handbook of Fundamentals, American Society of Heating, Refrigerating and Air Conditioning Engineers, Inc., 1791 Tullie Circle NE, Atlanta, GA 30329.
5. ASTM Standard B828–92, Standard Practice for Making Capillary Joints by Soldering of Copper and Copper Alloy Tube and Fittings, American Society for Testing Materials, 100 Barr Harbor Drive, West Conshohocken, PA 19428.
6. ISO Mechanical Refrigerating Systems Used for Cooling and Heating—Safety Requirements, ISO-5149, International Standards Organization, Geneva, Switzerland.
7. W.V. Richards, Refrigerant Vapor Line Sizing Not Dependent on Length, 1983 World Congress of Refrigeration, International Institute of Refrigeration, 177, Boulevard Malesherbes, F-75017 Paris, France.
8. W.V. Richards, Practical Pipe Sizing for Refrigerant Vapor Lines, 1984 Annual Proceedings, International Institute of Ammonia Refrigeration, 1200 19th St. NW, Suite 300, Washington, DC 20036–2412.
9. *IIAR Piping Practices Handbook*, Chap. 1, ''Pipe Sizing Procedures,'' International Institute of Ammonia Refrigeration, 1200 19th St. NW, Suite 300, Washington, DC 20036–2412.

CHAPTER C10
HAZARDOUS PIPING SYSTEMS

Ronald W. Haupt, P.E.*
Senior Consultant
Pressure Piping Engineering Associates, Inc.
Foster City, California

INTRODUCTION

Recent serious accidents[1] involving unwanted release of hazardous materials in the process industries worldwide have focused attention on the need to provide a process by which such accident occurrences can be prevented. This chapter discusses one aspect of that process—the design, construction, operation, maintenance, and modification of hazardous piping systems. The organization generally follows the sequence of piping design, construction, and operation discussed in greater depth in other chapters of this book. However, this chapter focuses on those elements of the design, construction, and operation of hazardous piping systems that are of particular importance to the owner, designer, and operator. Some of the elements discussed herein have been safely neglected in the design of more benign piping, but are mentioned here because it is felt they should be considered for hazardous piping. This chapter does not discuss in any depth the requirements or methods to perform process safety management, except to note elements of piping systems which may be susceptible to piping failures and need to be considered in any system designed to prevent fluid handling system failures. Lastly, this chapter does not discuss piping systems intended to handle nuclear power or nuclear power waste materials. These piping systems are highly regulated, and prescribed requirements are published elsewhere.

---

* This chapter is a major revision to the previous (Sixth Edition) ''Toxic and Hazardous Systems Piping'' chapter by Richard C. Getz, P.E., Chief Piping Engineer, United Engineers and Constructors Inc., Philadelphia, Pennsylvania. In addition, Philip D. Flenner, P.E. of Consumers Energy Corporation, Covert Michigan provided information and recommendations on welding, Alan D. Nance, P.E. of A.D. Nance Associates, Inc., Evans, Georgia provided valving and construction suggestions and editorial comments, Dr. William E. Gale, P.E. of Bundy, Gale & Shields, Novato, California provided resource information on hazardous mateials, and Robert E. Serb, P.E., Consultant of Richmond, California provided an overall editorial review and comments.

The American Society of Mechanical Engineers, Code for Pressure Piping, B31.3 *Process Piping*[2] defines a hazardous fluid service as:

> "a fluid service in which the *potential* for personnel exposure is *judged* to be *significant* and in which a single exposure to a *very small quantity* of a toxic fluid, caused by leakage, can produce *serious* irreversible harm to persons on breathing or bodily contact, even when *prompt* restorative measures are taken [*emphases added*]."

The emphasized words in the definition are all qualitative, and what may constitute a hazard in one condition (steam in a confined space, for example) may not constitute a hazard under other circumstances (i.e., steam in an open field). A fluid that may be a hazard to the uninformed general public, if exposed to it, may not be considered a hazard if knowledgeable service personnel are handling it. The responsibility of what constitutes a hazard ultimately resides with the owner, and the designer of a hazardous fluid handling system in concert with the owner. The responsibility for a hazardous fluid handling system does not end with its design and construction. Responsibility extends beyond system start-up to the owner to operate and maintain the system safely and provide for the emergency conditions of hazardous fluid releases.

Piping typically will only be part, perhaps even a small part, of a fluid handling system. Pressure vessels, pumps, heat exchangers, turbines, compressors, and other primary fluid handling equipment items may represent greater capital investments and contain greater quantities of hazardous fluids, but all parts of the fluid handling system, including the piping, must be designed, operated, and maintained so as to limit the release of the hazardous contents to nonhazardous levels.

It must be emphasized that during the service life of a plant (as high as 40 years or more), only diligent stewardship will ensure safe, reliable operation of hazardous piping systems. This stewardship begins at the early design phase, and continues through detail design into the construction, erection, and test phase and operation. However, this is only the beginning—a comprehensive monitoring and preventative maintenance program must be developed and implemented to ensure a hazard-free system. And finally, any modifications or repairs need to be performed with the same care and considerations required for the original design and construction, amplified by the recognition that hazardous residues may be present and reactive at and adjacent to the interface between the existing construction and any new or additional fabrications.

Table C10.2 at the end of this chapter summarizes many of the design and operation recommendations developed herein.

TERMS USED IN THIS CHAPTER

Definitions

Some of the terms used in reference to hazardous systems are defined below. Other common piping-related terms are defined in Chap. A1 of this book;

however, the following definitions of owner and designer are specific to this chapter.

Designer. The person responsible for the design decisions to be made regarding the hazardous piping design. It is important that the designer have considerable piping design experience and have access to relevant expertise in the hazardous materials being handled and regarding possible interaction between the hazardous materials and the materials of construction. Professional engineering registration would seem to be a necessity, complemented by an understanding of the intentions of the various codes and standards which may be used in the design, construction, operation, and maintenance of hazardous piping systems.

Explosive. Extremely rapid combustion of a material such that a high-pressure wave is formed and propagated away from the source, often causing extreme damage to nearby objects.

Flammability. The degree of susceptibility to ignition or combustion of a material under specific environmental conditions.

Owner. The organization which will operate the constructed hazardous piping system. The owner is typically viewed by legal systems as having the overall responsibility for the safe design, construction, and operation of owned facilities and, as such, has the primary responsibility for the identification of hazards. While the designer may have some shared responsibility and provide the owner with expertise with which to evaluate hazards, it is nonetheless usually held that the final responsibility for the identification of hazards lies with the owner. Further, it does not seem plausible that hazardous piping would ever be constructed in a speculative environment, and if an engineering construction is purchased by an organization not involved in its design, the new owner should closely evaluate piping systems which handle hazardous and potentially hazardous materials.

Process hazard analysis. A comprehensive review designed to identify potential hazards and to produce specific recommendations that will reduce the probability of a hazard occurring.

Process safety management. The systematic process of design, operation, maintenance, emergency planning, and training by which the unwanted release of hazardous materials is sought to be prevented or mitigated.

Reactivity. The susceptibility of materials to release energy either by themselves or in combination with other materials.

Risk-based inspection. A process by which the evaluation of the risks of failure are prioritized for the purpose of developing a system inspection program to limit system failures and the adverse consequences of those failures.

Safeguarding. The provision of protective and preventative measures that reduce the probability of hazardous conditions occurring.

Toxicity. The ability of a chemical molecule or compound to produce injury once it reaches a susceptible site in or on the body.

Acronyms and Abbreviations

29CFR1910	OSHA, ‘‘Process Safety Management of Highly Hazardous Chemicals; Explosives and Blasting Agents’’
AIChE	American Institute of Chemical Engineers

API	American Petroleum Institute
ASME	American Society of Mechanical Engineers
B16.5	ASME B16.5 "Pipe Flanges and Flanged Fittings"
B16.9	ASME B16.9 "Factory Made Wrought Steel Buttwelding Fittings"
B16.11	ASME B16.11 "Forged Fittings, Socket Welding and Threaded"
B31	ASME B31 "Code for Pressure Piping"
B31.1	ASME B31.1 *Power Piping*
B31.3	ASME B31.3 *Process Piping*
B31.8	ASME B31.8 *Gas Transmission and Distribution Piping Systems*
BPS	Bonding Procedure Specification
CFR	Code of Federal Regulations
HAZOP	Hazards and Operability Study
MSS	Manufacturers Standardization Society of the Valve and Fittings Industry
NACE	National Association of Corrosion Engineers
NBBPVI	National Board of Boiler and Pressure Vessel Inspectors
NDE	Nondestructive examination
NFPA	National Fire Protection Association
NIOSH	National Institute of Occupational Safety and Health
OSHA	Occupational Safety and Health Administration
RBI	Risk Based Inspection
PHA	Process Hazard Analysis
PQR	Procedure Qualification Record
PSM	Process Safety Management
WPS	Welding Procedure Specification

CODES, STANDARDS, AND REGULATIONS

The latest edition and addendum of an applicable code or standard should be used for the design and construction of hazardous piping. It may be assumed that the latest edition and addendum of most codes is the clearest interpretation of the requirements of that code. The codes and standards mentioned in this chapter are U.S. codes and standards, but could be reasonably replaced by comparable foreign codes and standards.

New-construction piping codes and standards set forth engineering requirements, normally considered minimum, to assure the safe design and construction of piping systems. Codes and standards use simplified approaches to gain the widest possible usage. Codes and standards typically caution the owner and designer that these documents are not handbooks; that not all service conditions and environmental effects can be known; and, further, that requirements cannot be written to evaluate all such conditions and effects. The owner and designer are asked to use their experience and engineering judgment to meet the safety factors inherent or explicit in the codes and standards. This necessity is compounded when the possibility of a hazard exists with a breach of the fluid-containing boundary.

At present there are few codes or standards which address the area of operations and maintenance of fluid handling systems, much less hazardous piping systems. There is a growing awareness of the problem as evidenced by recent U.S. PSM regulations[3] and efforts by industry to develop approaches to operation and maintenance, such as new and proposed codes and standards by the AIChE, API, ASME, and NBBPVI. However, specific guidance for component evaluation in these new and proposed codes and standards is limited; rather these documents tend to outline procedural requirements and often rely on new-construction rules to guide the operation and maintenance of fluid-handling systems.

The jurisdiction and the obligations of the various parties with regard to codes and standards are discussed at length in Chap. A4.

Piping codes and standards do not list hazardous substances; therefore the owner and designer must identify such materials. However, codes and standards may assist in the identification process. The following is a listing of codes and standards, or documents which may loosely be described as a code or standard, that may assist the owner and designer to identify hazardous materials, to properly design and construct hazardous piping systems, and to evaluate the performance of existing piping systems.

API 570, ‘‘Piping Inspection Code: Inspection, Repair, Alteration, and Rerating of In-service Piping Systems’’

API RP 574, ‘‘Inspection of Piping, Tubing, Valves, and Fittings’’

API RP 750, ‘‘Management of Process Hazards’’

ASME B31 ‘‘Code for Pressure Piping.’’ The ASME B31 Code for Pressure Piping consists of several sections: B31.1 *Power Piping,* B31.3 *Process Piping,* etc. (see Chap. A4). All the sections, published as separate books, may have useful information relevant to the design and construction of hazardous piping systems for their particular application. B31.3, however, is the only section that includes a chapter on hazardous piping systems.

ASME B31G, ‘‘Remaining Strength of Corroded Pipe’’

ASME Boiler and Pressure Vessel Code, Section VIII, Divisions 1 and 2, ‘‘Rules for Construction of Pressure Vessels’’

NBBPVI, ‘‘National Board Inspection Code’’

NIOSH, ‘‘Registry of Toxic Effects of Chemical Substances’’

NFPA 30, ‘‘Flammable and Combustible Liquids Code’’

NFPA 49, ‘‘Hazardous Chemical Data’’

NFPA 325M, ‘‘Fire Hazard Properties of Flammable Liquids, Gases, and Volatile Solids’’

NFPA 491M, ‘‘Manual of Hazardous Chemical Reactions’’

The references also include several miscellaneous noncode or standard publications which may assist the owner and designer in their efforts toward the identification of hazardous fluids and meeting PSM requirements.[4,5]

In addition, U.S. regulations have been published (1992) which require establishing procedures to ensure the integrity of systems handling hazardous materials.

TABLE C10.1 Materials Having High Toxicity or Reactivity

Acetaldehyde
Acrolein (2-Propenal)
Acrytyl chloride
Allyl chloride
Allytamine
Alkylaluminums
Ammonia, Anhydrous
Ammonia solutions
Ammonium perchlorate
Ammonium permanganate
Arsenic hydride (also called Arsine)
Arsine (also called Arsenic hydride)
Bis(chloromethyl) ether
Boron trichloride
Boron trifluoride
Bromine
Bromine chloride
Bromine pentafluoride
Bromine trifluoride
3-Bromopropyne (also called Propargyl bromide)
Butyl hydroperoxide (tertiary)
Butyl perbenzoate (tertiary)
Carbonyl chloride (also called Phosgene)
Carbonyl nitrate
Chlorine
Diisopropyl peroxydicarbonate
Dilaluroyl peroxide
Dimethyldiclorosilane
Dimethylhydrazine, 1,1-
Dimethylamine, anhydrous
2, 4-Dinitroaniline
Ethyl methyl ketone peroxide (also called Methyl ethyl ketone peroxide)
Ethyl nitrite
Ethylamine
Ethylene fluorohydrin
Ethylene oxide
Ethyleneimine
Fluorine
Formaldehyde (Formalin)
Fuming sulfuric acid (also called Oleum)
Furan
Hexafluoroacetone
Hydrochloric acid, anhydrous
Hydrofluoric acid, anhydrous
Hydrogen bromide
Hydrogen chloride
Hydrogen cyanide, anhydrous
Hydrogen fluoride
Hydrogen peroxide
Hydrogen selenide
Nitric acid
Nitric oxide
Nitroaniline
Nitromethane
Nitrogen dioxide
Nitrogen oxides (NO; NO_2; N_2O_4; N_2O_3)
Nitrogen peroxide (also called Nitrogen tetroxide)
Nitrogen tetroxide (also called Nitrogen peroxide)
Nitrogen trifluoride
Nitrogen trioxide
Oleum (also called Fuming sulfuric acid)
Osmium tetroxide
Oxygen difluoride (Fluorine monoxide)
Ozone
Pentaborane
Peracetic acid (also called Peroxyacetic acid)
Perchloric acid
Perchloromethyl mercaptan
Perchloryl fluoride
Peroxyacetic acid (also called Peracetic acid)
Phophoryl chloride (also called Phosphorus oxychloride)
Phosgene (also called Carbonyl chloride)
Phosphine (Hydrogen phosphide)

TABLE C10.1 Materials Having High Toxicity or Reactivity *(Continued)*

Chlorine dioxide
Chlorine pentrafluoride
Chlorine trifluoride
Chlorodiethylaluminum (also called Diethylaluminum chloride)
1-chloro-2, 4-dinitrobenzene
Chloromethyl methyl ether
Chloropicrin
Chloropicrin and Methyl bromide mixture
Chloropicrin and Methyl chloride mixture
Cumene hydroperoxide
Cyanogen
Cyanogen chloride
Cyanuric fluoride
Diacetyl peroxide
Diazomethane
Dibenzoyl peroxide
Diborane
Dibutyl peroxide (tertiary)
Dicloro acetylene
Diclorosilane
Diethylaluminum chloride (also called Chlorodiethylaluminum)
Diethylzinc
Hydrogen sulfide
Hydroxylamine
Iron, pentacarbonyl
Isopropylamine
Ketene
Methacrylaldehyde
Methacryloyl chloride
Methacryloyloxyethel isocyanate
Methyl acrylonitrile
Methylamine, anhydrous
Methyl bromide
Methyl chloride
Methyl chloroformate
Methyl ethyl ketone peroxide (also called Ethyl methyl ketone peroxide)
Methyl fluoroacetate
Methyl fluorosulfate
Methyl hydrazine
Methyl iodide
Methyl isocyanate
Methyl mercaptan
Methyl vinyl ketone
Methyltrichlorosilane
Nickel carbonyl (Nickel tetracarbonyl)
Phosphorus oxychloride (also called Phosphoryl chloride)
Phosphorus trichloride
Propargyl bromide (also called 3-Bromopropyne)
Propyl nitrate
Sarin
Selenium hexafluoride
Stibine (Antimony hydride)
Sulfur dioxide (liquid)
Sulfur pentafluoride
Sulfur tetrafluoride
Sulfur trioxide (also called Sulfuric anhydride)
Sulfuric anhydride (also called Sulfur trioxide)
Tellurium hexafluoride
Tetrafluoroethylene
Tetrafluorohydrazine
Tetramethyl lead
Thionyl chloride
Trichloro (Chloromethyl) silane
Trichloro (Dichlorophenyl) silane
Trichlorosilane
Trifluorochloroethylene
Trimethyloxysilane

International efforts follow similar paths. In the United States, 29CFR1910, App. 2 lists 140 chemicals with high toxicity and reactivity which OSHA considers highly hazardous above the concentrations and threshold the quantities listed there. The chemicals only are listed in Table C10.1. For concentrations, threshold quantities, and revisions to the list of chemicals in Table C10.1, the latest CFR document should be consulted. Note that not all of the materials listed are in a liquid form capable of being piped.

IDENTIFICATION OF HAZARDOUS PIPING

The identification of the hazards associated with the materials to be handled by a system is the first and most important step in the piping design process. Complicating the process are human error and inadequate management of mechanical systems, which have been said to be the largest causes of hazardous accidents. Various methods may be used to identify these hazards. The ''Emergency Planning and Community Right-to-Know Act'' passed by the U.S. Congress in 1986 established a framework for community emergency planning programs to deal with chemical releases. Additional federal actions eventually led to the publication of 29CFR1910 and identification of the hazardous materials listed in Table C10.1. It would not be typical for the piping designer to be as involved in community emergency planning as the owner. However, the piping designer may be more involved in the facility's mandatory PHA, if covered by 29CFR1910, or more informal hazards assessment, if not covered by 29CFR1910. From the designer's involvement in these tasks, it may be a simple matter to establish whether a piping system needs to be designed as hazardous. If the designer is not involved in any hazard analysis, it is incumbent upon the owner to ensure that all relevant knowledge developed from these analyses is communicated to the designer. It is the responsibility of both the designer and the owner to be sure that all of the relevant information has been received and appropriately applied. Further, the designer is responsible to clearly communicate the design intent to the fabricator and erector and to provide the operator with clear guidance as to the proper operation of the constructed piping system.[6] A composite system diagram (see Fig. C10.1) may be useful in organizing piping system design features and in communicating them to the operator.

Various methods are used to perform PHA or less formal assessments such as HAZOPs (Hazard and Operability Studies), ''what if'' checklists, FMEAs (Failure Mode and Effect Analyses), and ''Fault-Tree Analyses.'' These methods often can be used jointly, complementing each other, to produce a higher quality product. While it is beyond the scope of this chapter to describe the different hazard assessment techniques, they all have some basic objectives:

Identify hazardous contents or functions relating to safe handling of such contents

Evaluate the operational and environmental effects and their potential to cause a failure which would result in a hazard

Evaluate the consequences of a postulated failure

Develop specific recommendations to contain, control, or limit the identified hazard.

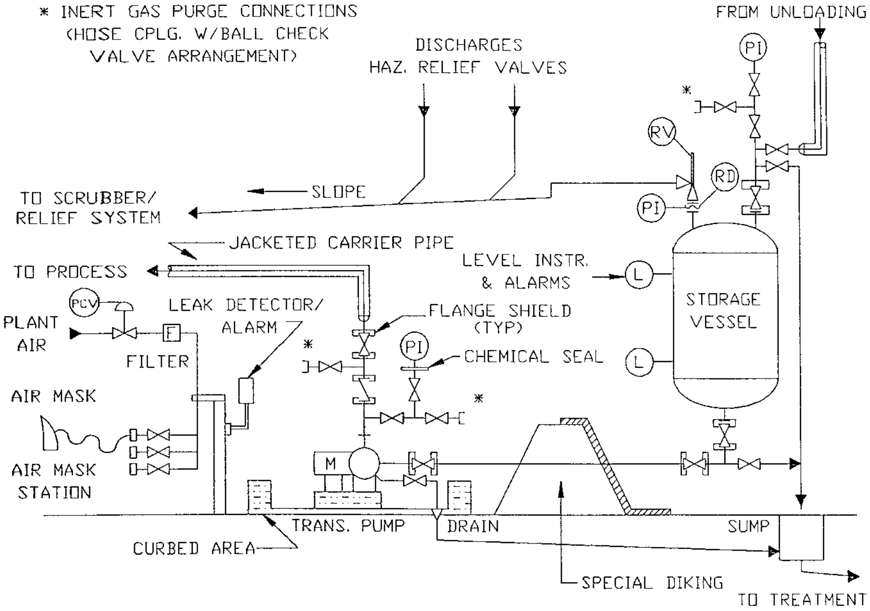
* INERT GAS PURGE CONNECTIONS (HOSE CPLG. W/BALL CHECK VALVE ARRANGEMENT)
DISCHARGES HAZ. RELIEF VALVES
FROM UNLOADING
PI
*
RV
RD
PI
SLOPE
TO SCRUBBER/ RELIEF SYSTEM
JACKETED CARRIER PIPE
LEVEL INSTR. & ALARMS
L
TO PROCESS
STORAGE VESSEL
PCV
LEAK DETECTOR/ ALARM
FLANGE SHIELD (TYP)
PLANT AIR
F
FILTER
*
PI
CHEMICAL SEAL
L
AIR MASK
*
AIR MASK STATION
M
TRANS. PUMP
DRAIN
SUMP
CURBED AREA
SPECIAL DIKING
TO TREATMENT

FIGURE C10.1 Composite system diagram.

With regard to piping systems, the *hazard assessment* task should at least consider the following:

- What is the amount and hazard level of the contents in the materials handling system?
- How much of the materials handling system contents could be released if the piping pressure boundary is breached?
- What is the effect on the materials handling system if the piping system fails to operate?
- What is the size of the piping (small piping can be more robust relative to large piping, but small piping can also be more easily abused by activities around the piping system)?
- Where is the piping located (who will be exposed, and in what form will the exposure take place, should a release of the hazardous material occur, and how knowledgeable are those who might be exposed)?
- Are the piping materials of construction compatible with the hazardous contents?
- What are the normal and abnormal service conditions (are the service conditions, so extreme, above and below ambient conditions, or even the ambient conditions themselves, that extra care appears prudent)?
- What is the potential for the piping system to experience a lot of service cycling or be subject to hammering or slugging or flow or mechanically induced

vibrations (high flow rates and two-phase flow can accelerate erosion and corrosion effects, excite piping system modes of vibration, or impose significant hydraulic loads)?

- What are the environmental conditions (is the plant location, or the piping configuration or elevation such that extreme environmental loads can be expected)?
- What is the expected piping system service life (is the time during which the piping system is to be operated of such duration that the probability of failure, such as, creep, fatigue, or erosion/corrosion damage, is significantly increased)?
- What protective measures are appropriate, (for example, guarded piping, structural separation, leak sensing, measures to mitigate the effects of leaks)?

Hazard assessments can be conducted at various stages of a project:

- A preliminary hazard assessment can be conducted early in the project to highlight major potential hazards and define those areas where further study is needed.
- A design hazard assessment can be performed after the process design has been completed to ensure that the process hazards have been identified and necessary corrective recommendations have been implemented.
- A design verification assessment can be performed after the piping system has been designed, to ensure that all items relating to previous hazard assessments have been satisfactorily resolved.
- An operational readiness assessment can be conducted prior to plant start-up to ensure that the design measures established as a result of the various hazards assessments have been incorporated into the construction and planned operation of the piping system.
- Operating assessments can be performed on a routine basis during operating and outage periods to ensure that proper operation, maintenance, and repair procedures are being adhered to.

Note that even if a piping system does not handle a hazardous substance, if the piping system is critical to the operation of a hazardous substance handling system it may need to be designed, constructed, and operated with the object of maintaining its operability under all conceivable operating and environmental conditions. Where there is any question regarding the toxicity or reactivity of a chemical, experienced technical personnel knowledgeable about that chemical should be consulted. The exclusion of a chemical from Table C10.1 should not imply that piping is not hazardous if the contents are released under unfavorable conditions, in an unfavorable location, and in a sufficient amount. When in doubt, a conservative approach would be to adopt appropriate provisions of this chapter. In B31.3 services it is not uncommon to adopt the provisions for hazardous fluid service without referring to the service as such.

QUALITY ASSURANCE AND QUALITY CONTROL

Quality Assurance (QA) and Quality Control (QC) programs are normally associated with the design and construction activities, respectively. To some extent the hazards assessment process can be used to implement and complement both activities. However, the design process for hazardous piping systems, even if a formal QA program is not used, should incorporate document controls covering all relevant calculations, specifications, and drawings; a system whereby all relevant calculations, specifications, and drawings are checked by an independent knowledgeable person; and the calculation, specification, and drawing originator(s) and checker(s) acknowledging their activities by signature and dates; and a documented periodic review of the design activities by supervisory, technically knowledgeable personnel.

It would be expected to find formal QC programs implemented by quality manufacturing, fabrication, and construction organizations. In the construction of hazardous piping systems it is probably not a good idea to use any product from or service by an organization that does not have a functioning QC program. A functioning QC program is one which appears to have been used and revised periodically to meet new operating conditions, organizational changes, or improve the conformance to the way the organization works. A lack of revisions might indicate a lack of commitment to the QC program. A QC program will be able to document work performed; provide proof of materials, workmanship, and conformance to the construction documents; and maintain a segregation of parts and materials throughout the manufacturing, fabrication, and construction process.

DESIGN CONSIDERATIONS

The hazardous piping system should be designed for the entire range of possible design conditions. More information about the operating, possible abnormal, and environmental conditions should be understood than typically may be necessary for a more benign piping system. The designer should have access to a greater variety and level of expertise (e.g., in materials, welding, erosion/corrosion, thermal hydraulics, structural dynamics, chemical interactions, and systems operation) than would be typically necessary for more benign systems. The designer should be skeptical of untried methods and product forms without sound test data to back up analytic presentations. Common sense and reasonable conservatism are necessary to design a hazardous piping system.

Piping Failure Modes

The piping failure modes of greatest concern are *rupture, mechanical joint disengagement*, or *excessive deformations* and *collapse*. These represent the ‘‘worst case’’ failure scenarios. A rupture has the potential to release a large amount of the piping system contents. Disengagement of a mechanical joint has a like potential. Excessive deformations or collapse may cause active equipment (e.g., valves, pumps, turbines, and compressors) to bind and not function and other piping components to pinch or otherwise impede fluid flow.

Other piping failure modes of lesser but still significant concern are the effects of cyclic behavior or the excessive deformations of mechanical joints. Cyclic effects can lead to a fatigue failure, either resulting in a leak or possibly a rupture. Excessive deformation of a flange can also result in a leak but probably not a rupture.

Design Conditions

The design pressures and temperatures should represent the highest (or lowest if the piping system is to operate below ambient conditions) coincident pressures and temperatures the piping is expected to experience during any normal or abnormal operating condition, including any possible environmental effects. Possible variations in normal and abnormal operating conditions should not be allowed to exceed the design pressures and temperatures. The design pressures and temperatures and the maximum coincident external (hydraulic, mechanical, and environmental) loadings should be used to establish the design wall thicknesses and classes for all fittings. Note that considering the effect of external loads may necessitate higher classes of fittings than would be necessary for pressure-temperature conditions alone. Based on variations in external loads, the classes of fittings may vary within the piping system.

Material Selection

Highly ductile materials should be used for hazardous piping. The use of low-ductility materials, such as cast-iron or glass, should be avoided. Materials with demonstrated brittle behavior or sensitivity to thermal and mechanical shock loadings limit their serviceability and range of use. Low-ductility materials are susceptible to brittle failure in hazard mitigation situations, for example from thermal shock when exposed to fire or fire-fighting measures.[8] Impact testing should be used to verify material ductility.

Proprietary materials may be used if the designer is confident of the suitability of the materials for the range of normal and abnormal conditions the material will be exposed to. Materials without sufficient service experience should be avoided.

Material selection should take into account the suitability of the piping to resist deterioration in service. Information should be sought to determine material performance in corrosion or erosion environments.[9,14] Information may be provided; either qualitatively (e.g., acceptable or not acceptable) or quantitatively (e.g., expressed as a uniform corrosion rate). Quantitative information is used to establish corrosion or erosion allowances; qualitative information to select a material that will minimize erosion/corrosion damage. Obviously, the qualitative approach is preferable.

The designer should be aware that in actual service corrosion and erosion will typically be localized and not occur uniformly throughout the piping system. Corrosion is a function of many parameters, such as trace elements in the material, temperature, flow geometry, and flow rate. Corrosion is usually accelerated at crevices, under backing rings, in threaded joints, in socket-welded joints, at weld metal areas and heat-affected zones, or in other stagnant, low-flow areas of the piping system. Erosion is typically accelerated where high flow velocities exist, for example, in undersized pipe, at elbows, branches, reducers, or other locations where there are flow disturbances.

In addition to evaluating the piping base materials, the method of pipe or piping component manufacture should be considered. Joints, material postforming treatment, and manufacturing processes can render piping less resistant to erosion/corrosion than the base materials.

Metallic Piping. Metallic material identification for hazardous piping systems is out of the scope of this chapter. Numerous sources can provide meaningful data for use in the materials selection process.[9,14] But the final choice of material should at least be reviewed by an expert in the chemical and erosion and/or corrosion performance of the candidate material.

Metallic and weld material selection should consider the potential adverse effects of any dissimilar materials that may be in contact, as galvanic action at dissimilar joints can promote accelerated corrosion where it would not otherwise be expected to occur. Material test reports should be sought for all pipe and components so they are available during maintenance activities to determine more realistic factors of safety against failure.

Time-dependent material properties must also be addressed during the material selection process. At high temperatures, typically over 700 to 800° F (370 to 430° C), and over a period of time ferrous materials lose ductility, decrease in strength, and flow (creep). Other metallic materials (e.g., copper, aluminum) experience this phenomenon at lower temperatures and are typically not used where creep would affect performance. It may be wise to select a conservative design temperature when the hazardous piping system must operate in the creep regime. Additional supports and the judicious use of rigid supports can reduce pipe sag and pipe migration during service.

Nonmetallic Piping. Nonmetallic piping typically creeps at room temperature and can suffer degradation due to temperature effects or exposure to sunlight. Consideration should be given to additional supports and protection from sunlight. Using a nonmetallic lining in pipe or a metallic frame around the nonmetallic material may offer protection or additional support. Providing protection for nonmetallics during operation by isolation, double containment, or other means may also be appropriate.

Nonmetallics are attractive because of their corrosion-resistant properties and low cost, but typically they are not erosion resistant. Also, nonmetallics are susceptible to undetectable damage due to impact during transport, storage, and installation. Pipe-joining procedures require care that must be observed, but because nonmetallics are perceived as ''low tech,'' such procedures are often abridged.

Nonmetallics typically exhibit highly anisotropic behavior. Seeking the actual material properties (e.g., yield and tensile strengths, elastic modulus) in the transverse and longitudinal directions may be warranted to assist in maintenance activities for the same reason they are sought for when using metallic materials.

Because of nonmetallic piping's low elastic modulus, internal pressure can cause significant expansion of the pipe that is similar to thermal expansion in metallic pipe. The performance of nonmetallics under cyclic loadings is not well understood because of the wide range of nonmetallic materials, many being proprietary, the lack of material standards, and their typically nonisotropic behavior. If loads are expected to cycle more than a couple of hundred times, including pressure cycles, fatigue testing of the material may be warranted.

The designer should also be aware that nonmetallics can often be combustible and may require fire protection.

At this time (1999) there are no proven volumetric NDE methods available. Visual and dye penetrant methods are used, but these methods are limited to the pipe surfaces, and usually to the outside surfaces. Ultrasonic methods have been suggested as offering a potential volumetric examination, but these are thus far unproven. Refer to Chapter B13 and Part D of this handbook.

Design Criteria

Hazardous piping should be designed to a recognized piping code or standard. B31.3 has a chapter dedicated to the design of hazardous piping, but other codes and standards could be used with proper consideration of the hazards and mitigating design attributes. Safety codes and standards, however, do not address levels of hazard. The designer should consider specifying greater safety attributes for hazardous piping to the degree he feels they may be necessary. A review of the B31.3 nonmandatory App. F, Precautionary Considerations, and G, Safeguarding[2] may provide the designer with ideas for enhancing the safety of the hazardous piping system.

If the designer plans to use nonstandard or unlisted materials and components or to use more rigorous analysis or alternative examination methods, the justification for the use of such materials and components under all the possible operating and environmental conditions and the reasons for justifying the use of such analysis and examination methods should be fully documented for the owner's approval before the release of specifications and drawings for construction.

PRESSURE DESIGN

The most significant safety attribute of piping is *pressure containment*. Hazardous piping should be designed for the most severe condition of coincident pressure, temperature, and loading. B31.3 does not permit, nor should any hazardous piping be allowed, to exceed design values, even for short periods of time. It may, in fact, be wise to overdesign the pipe for pressure (i.e., specify a thicker wall than is required by the piping code used). Other loadings may be increased by thicker pipe walls, but these other loadings, such as thermal expansion, may be compensated for by adding to the length and location of pipe in the anchor-to-anchor piping runs.

Straight Pipe

The design of straight pipe should be in accordance with the specified piping code. Flow velocities should be limited to a maximum of about 10 ft/s (3 m/s) for liquids and about 140 ft/s (43 m/s) for gases, especially where the potential for erosion and corrosion exists. Higher velocities may be justified by thorough investigation of the erosion/corrosion potential, but higher velocities may result in undesirable flow-induced vibrations and noise.

The additional wall thickness provided to allow for erosion and corrosion should be based not only on the expected rate of wall loss and the anticipated life of the system, but also on the expected examination interval of the in-service inspection program.

Since hazardous piping is often small piping, protection of the piping from damage after installation is also advisable. An additional wall thickness could be provided, or the piping may be isolated or located in channels, cable trays, or double containments.

Standard Components

Standard piping components are discussed at length in this and other books (see Chap. A2). The designer, however, should be confident that components supplied as standard actually meet the standards specified; for example, the manufacturer should be able to provide evidence that the B16.9 fitting furnished or a comparable fitting has met the burst test provisions of B16.9.

The designer should be careful to ensure that components are specified to match the pipe to which they are connected. Further, the designer should request to be advised if the fabricator or erector deviates from matching components to the pipe or uses a nonstandard fitting in place of a standard fitting (e.g., using a Schedule 160 fitting rather than Schedule 80 fitting, or replacing a standard welding tee with a fabricated branch connection). Such deviations can result in stresses not considered in the design.

The designer should also be aware that velocities will increase locally in non-straight pipe components over the mass (bulk) velocity in straight pipe and thus can increase the local potential for erosion and corrosion.

Valves

A valve is usually defined by the piping codes as a standard piping component. As is the case with other standard components, the designer should be aware that fluid velocities, particularly in the vicinity of the valve seat, will be higher than in matching pipe and can result in erosion and corrosion problems.

The selection of valve type, style, and valve body and trim materials should be based on hazardous fluid properties, required operating characteristics, and ease of maintenance. When locating valves, the designer should consider required operability and service access. Selection of valve materials and location should also include consideration of potential accidents (e.g., fire). The valve construction (i.e., bolted bonnet versus pressure seal or welded) should include consideration for pressure boundary integrity required to prevent leakage of hazardous material (see Fig. C10.2). It is recommended that the valve meet recognized piping code requirements for design, materials, and manufacture.

Isolation and Control Valves. The number and locations of isolation valves should be based on system requirements and include consideration for potential release of hazardous materials in the event of pipe rupture or inadvertent improper operation.

Metal-seated gate valves should be of the flexible disc, split wedge, or double disc design which provide tighter shut-off than solid wedge designs, and prevent jamming of the gate, if the valve cools down in the closed position. The wedge and/or body seat should be hard-faced to prevent galling.

Remote-controlled valves (with motor operators, air operators, etc.) versus manual valves should be considered for more rapid valve operation and operation in a contaminated area. Similarly, remote manual operating devices, such as extension rods and chain-wheel operators, should be considered for ease of and safe valve manipulation. For large valves where motor operators cannot be justified, but where a valve may be required for isolation in an emergency, consider using portable air drives to assist in rapid valve closure. Also, for large manual valves consider ''impact'' handwheels to assist in the seating or unseating of the disc.

Valve and operator type should be such that valve position is easily visually determined (for example, see Fig. C10.2). For valves essential to plant safety, consider the use of remote position indication. To preclude the possibility of inadvertent, improper valve operation, consideration should be given to using valve position-locking devices.

Permissible valve leakage (i.e., leakage across the seat[s] when closed) should be based on the properties of the fluid media and hazard presented by leakage.

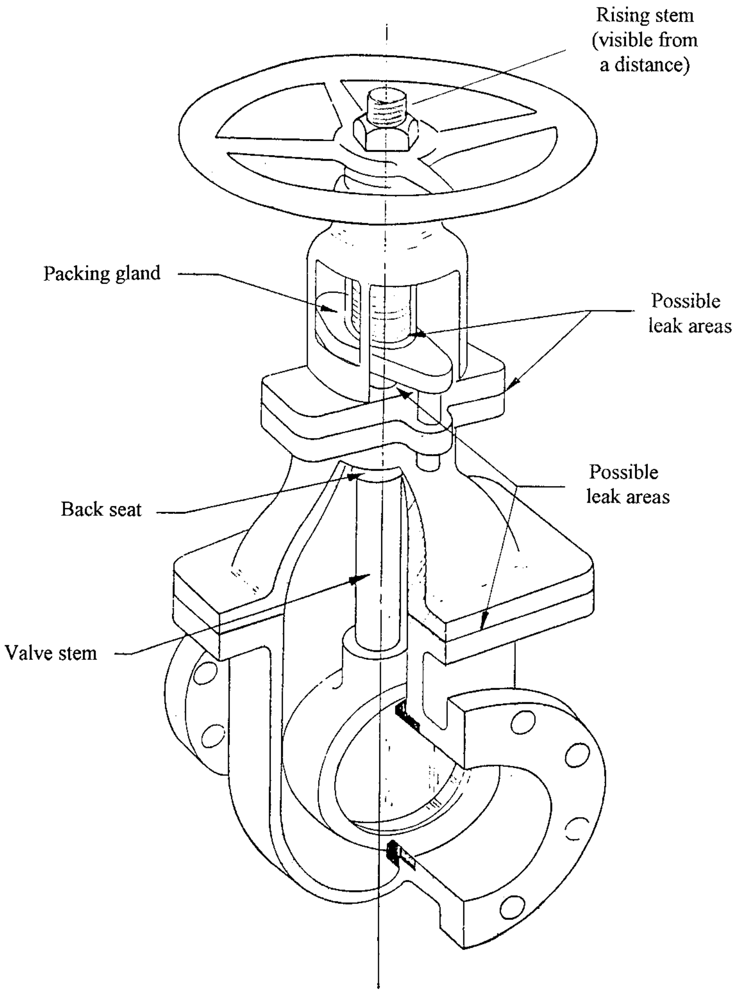
Rising stem
(visible from
a distance)
Packing gland
Possible
leak areas
Possible
leak areas
Back seat
Valve stem

FIGURE C10.2 Conventional gate valve.

Valve backseat capability should be considered for gland repacking while the system is energized. The design of valve gland injection or leakoff collection devices should also be based on the properties of the fluid media and hazard presented by leakage. Valve body drains should be considered for removal of fluid media from the lower cavities for ease of maintenance activities.

Control valve redundancy (i.e., parallel installations) should be considered based on required system operation. The designer should be aware that cavitation can occur in the piping downstream of control valves and can result in severe erosion/ corrosion problems. Control valve positioner linkage materials need to be compatible with the external environment and contained fluids.

Although service failures in valves have resulted from shrinkage cavities in cast valve walls,[7] through-wall cracking of valves is rare. On the other hand, leakage through the stem/bonnet is relatively common.[11] Recent design enhancements have produced valves with sophisticated devices to eliminate valve stem leakage. Most of these designs employ a proprietary bellows-like device to effect a hermetic seal. These devices, along with conventional backup seals, may provide a solution to the problem of fugitive emissions emanating from valve stem areas.

Relief and Safety Valves. Relief and safety valves should conform to a recognized pressure component code which requires overpressure protection of the pressure boundary. B31.3 requires that the design pressure shall not be exceeded by more than 10 percent during a pressure-relieving event. Note that this is in conflict with the B31.3 requirement that piping shall be designed for the most severe condition of coincident pressure, temperature, and loading. It is recommended that the design pressure and temperature include values expected during the pressure-relieving event. However, should the 10 percent requirement of B31.3 be applied, the designer should consider including a temperature correction, if the design temperature is also exceeded during the pressure-relieving event.

Unless the pressure-relieving system is designed to regularly recycle or eliminate the hazardous contents, the set pressures of relief and safety valves should be set sufficiently above the normal and recoverable abnormal operating conditions such that the pressure-relieving system is not activated except in an emergency.

Since small safety/relief valves (sentinel valves) have a tendency not to reseat once they lift, they should have the spring cap drilled and tapped for a gag which should be attached to the valve to facilitate closure.

Rupture disc and breaking pin devices are normally unsuitable for relieving pressure in hazardous piping.

Nonstandard Components

Special fabrications, forgings, castings, and other specialties may complicate the design and cause difficulties later, if replacements are required. However, if used they should be qualified for pressure design in accordance with a recognized piping code or standard proof test, such as found in B16.9. The proof test procedure and the results should be reviewed and approved by the designer. The proof test should prove the nonstandard component's capability to function at 110 percent of the piping system's design pressure, adjusted for the design temperature, with the factor of safety inherent in the piping code used for design.

Expansion Joints and Flexible Hose

Expansion joints and flexible hose should be avoided unless absolutely necessary to accommodate thermal movements where expansion loops are not feasible or to decouple the piping from potential sources of mechanical vibration, (e.g., rotating equipment). If used, it should be realized that portions of the joint or hose are typically highly stressed and can degrade rapidly in an adverse environment or if manufactured with materials unsuitable for the service. If tie rods are not used, the pipe supports must be designed for the very large loads resulting from pressure thrust. The designer should follow the recommendations of the manufacturer and the Expansion Joint Manufacturers Association.[16]

JOINT DESIGN

Piping joints, whether welded or mechanical, must be suitable for the anticipated pressure, temperature, and external loading conditions. The designer should also be aware that joints may be sensitive to the type of loading or be subject to selective attack by the erosive or corrosive nature of the fluid handled. Barriers and shields should be considered for mechanical joints to protect personnel from leakage.

Welding

Welding is the preferred method of making a joint in hazardous piping. Welding should be performed in accordance with the ASME Boiler and Pressure Vessel Code, Sec. IX, *Welding and Brazing Qualifications*. While welds between pipe supports or other attachments and the pressure-retaining boundary should also be in accordance with Sec. IX, welds between pipe support items may not need to be Sec. IX welds if they conform to an acknowledged structural welding code.

Meeting the requirements of Sec. IX should assure the quality of welding. Section IX requires the preparation of a written welding procedure specification (WPS). The procedure is qualified in a procedure qualification record (PQR) which documents physical testing proving that welds made in accordance with the WPS provide the required mechanical properties, essentially equivalent to the base material properties. Just as important is the qualification of the welder, which is done to prove the ability of the welder to make sound welds in accordance with the WPS. This is also proven by testing sample weldments done by the welder. For hazardous service, the designer may wish to require more stringent testing of either or both the procedure and welder and in-process checks to ensure the desired weld quality.

To minimize any adverse effects from welding, the designer should review and approve the welding procedures and qualifications of the manufacturer, fabricator, and erector. The welding processes chosen should be based on the materials being welded, the quality level desired, and the availability of personnel capable of depositing sound weld metal. The filler material should be selected to essentially match the chemical composition and material properties of the base materials. Corrosive environments, low temperatures (requiring toughness considerations), and high temperatures (requiring creep considerations) may necessitate special attention to welding processes.

Longitudinal welds used to manufacture pipe are typically made in accordance with Sec. IX, but also typically these welds are penalized, using a joint efficiency factor to reduce the allowable base material stress resulting in a thicker weld. Some care should be exercised if welded pipe is to be used for hazardous piping. B31 joint efficiency factors have been subjectively developed and do not take into account possible operating degradation (e.g., due to creep). If the joint efficiency factors are less than 1.0, using B31 specified NDE can improve the joint efficiency factors to a value of 1.0, but this should not necessarily be construed as removing the metallurgical or geometric discontinuity that the weld joint represents. Consideration should be given to using seamless pipe in hazardous piping. On the other hand, high-resolution NDE in conjunction with a mill hydrotest has been shown to produce a high-quality weld seam in welded pipe. Because anisotropic properties are a typical result of the pipe manufacturing process (with more disparity expected in seamless pipe), the designer may consider testing for both transverse and longitudinal, yield and tensile properties as it is not unusual to have the maximum properties given in material test reports.

Butt welding is also the preferred method of joining two pieces of pipe because it typically produces a relatively small local stress riser in the form of surface imperfections,[15] compared to other types of welded joints, and a butt weld joint can be readily examined by most conventional nondestructive techniques.

Typically, with hazardous materials, a smooth internal root condition is desired. In order to achieve this, the gas tungsten arc-welding (GTAW) process is often chosen, sometimes with the additional application of automatic welding. This is true because the GTAW process characteristics allow for close control of heat input. Other processes may be used to fill the weld joint after the initial layers are deposited.

Socket welds can be used if the designer evaluates and accepts its deficiencies. Several problems could be anticipated with the use of socket welds. Socket welds are susceptible to failures due to pressure cycling. The gaps required for fit-up and crevices in the socket are also potential debris collectors and places where corrosive elements can accumulate. Recent improvements in automatic welding in the field renders such a reasonably viable alternative to socket welding. Backing rings used for butt welds may also be subject to problems similar to the crevices in socket welds and it may be wise to avoid their use.

Branch connections are often made using proprietary products (so-called ''integrally reinforced'' weld-on fittings). It is important to obtain the manufacturer's recommendations for welding, in particular the attachment weld profiles, prior to their specification in the design. It is also important to specify a cover weld for the attachment weld to the header similar to the requirements of the various B31 codes. If the branch connection is large, cover welds larger than those required by code would be prudent. Details of the required weld should be specified in the engineering design.

If fatigue is a problem, consideration should be given to grooming the surface of the finished circumferential and branch welds. For cleanliness, and if the inside of the pipe is accessible, grooming the inside surface of the weld might also be considered.

Dissimilar metal welds should not be used unless the thermal expansion effects of the two materials are evaluated. If the dissimilar metal weld is necessary, it should be a butt weld, not a socket weld or a branch connection weld.

Brazing and Soldering

Brazing and soldering should not be used in hazardous piping.

Bonding

It is obvious that the bonding of nonmetallic piping is critical to the construction of a safe hazardous piping system. However, the designer should recognize the fact that many bonds are carelessly made because the use of plastic pipe is not typically treated with the same regard as metallic piping.

The bonding of nonmetallic piping components should be done in accordance with a written bonding procedure specification (BPS). The BPS should be qualified by testing the mechanical properties of an assembly made in accordance with the BPS. All bonders should be qualified by preparing an assembly in accordance with the BPS that is tested to prove the bonder can make acceptable bonds. Refer to Chaps. D1 and D2 of this handbook.

Flanges

It bears repeating that flanges should be designed for the maximum coincident pressure, temperature, and loading. This is a fact that is often missed because typically flange standards list pressure and temperature ratings only. If piping loads are significant and if the flange is not properly sized, then the flange will inevitably leak. Increasing the flange class (e.g., using a Class 300 flange where the pressure and temperature would indicate the use of a Class 150 flange) will result in a joint less likely to leak and in flange bolts that are less likely to be overstressed. The equivalent pressure method described in *Design of Piping Systems*[8] is suitable for sizing flanges with external loads and has been incorporated into a number of piping codes.

Flanges conforming to B16.5 are recommended. Flanges manufactured to other recognized consensus standards may need to be used for large-diameter piping and would be acceptable with due consideration given to external loads and fit-up.

Standard flanges include flat face, raised face, tongue and groove, ring joint, and lap joint flanges. Gasket materials include rubber, cork, elastomeric composition, spiral wound and laminated metallic-elastomer mixes, and solid metal rings. The effects of the hazardous contents on the gasket material should be considered.

These flanges offer the advantages of ease of joint assembly, standardized dimensions, and general availability. A disadvantage is that assembly requires high bolt loading during initial seating to retain sufficient gasket pressure in service. This should be a consideration if the joint is subject to high cyclic loads or operates in the creep regime of the flange materials.

Proprietary flanges are nonstandard components and should meet the requirements described for nonstandard components. The designer or the manufacturer should also understand how the flange will perform when subject to external loadings. These joints typically have fine surface finishes and tight tolerances. They usually require great care in assembly, and the tight gaps may create the potential for crevice corrosion.

Published flange ratings (pressure-temperature-material class) presume the proper selection of gasketing and bolting materials. The flange joint is an assembly of flange, gasket, and bolting. In most cases the gasket seating surface is critical to proper joint sealing. Should the designer be inattentive to the interdependency of the flange assembly components, the flanged joint may not withstand the operating and environmental loadings.

The designer should endeavor to locate flanged joints where external loads are low. The loading on a flanged joint includes internal pressure, bolt loads, and the piping operating and environmental loads.

Weld-neck flanges are recommended for hazardous piping systems. Other flanges may be used if due consideration is given to their deficiencies. Other flanges, excepting lap joint flanges, are typically joined to the pipe with a fillet weld, which is less desirable than a butt weld. The attachment (strength) fillet weld is typically more highly stressed and subject to a stress amplification due to its geometry. Slip-on flanges, if used, should be double-welded with the seal (or back) weld at a minimum distance from the face of the flange. Care must be taken to avoid having the seal weld interfere with the proper function of the flange. Threaded flanges should be avoided due to their susceptibility to crevice corrosion and because threads represent significant stress risers. Socket welding flanges should only be used for NPS 2 (DN 50) and smaller. When using socket welding flanges care must be used regarding fit-up to ensure a minimum gap between the pipe and the bottom of the socket. Plate flanges (flanges without hubs) should be avoided unless double-welded and the flange thickness is increased to offset the high attachment weld stresses. Lap joint flanges are susceptible to crevice corrosion and potential sealing problems. Crevices in any of the flanges may collect contaminates, and the collected contaminates could present a problem when servicing flanged piping and equipment.

Flanged joints in hazardous fluid service can be safeguarded with flange shields to confine any escaping fluid.

Threaded Connections

Threaded connections should be avoided, if possible. Their vulnerability to fatigue damage is significant, especially where exposed threads are subject to corrosion. Note that materials susceptible to corrosion will corrode if exposed to unconditioned air. If used then, external piping loads should also be kept as low as possible. Seal welds covering the exposed threads may reduce external damage, but exposed threads within piping may also pose erosion, corrosion, and fatigue problems. Construction documents should specify seal welds where appropriate.

Other Mechanical Joints

There are a number of proprietary mechanical joints which may be acceptable if consideration is given to their deficiencies. Generally these mechanical joints have crevices which can trap fluids and would be susceptible to crevice corrosion. These proprietary joints should be treated as nonstandard components and meet the requirements previously set forth. In addition, the mechanical joint's ability to withstand the operating and environmental loads to which it will be subjected must be verified. Proprietary joints meeting industry standards may not necessarily be suitable for hazardous service. There are instances where industry standards do not comply with the factors of safety inherent in recognized piping codes.

Requirements for Leak Testing

B31.3 requires a sensitive leak test in addition to other required leak testing. It is recommended that a sensitive leak test be performed regardless of the piping design code used and such should be specified in the engineering design. If the design is in accordance with a piping code other than B31.3 or if the designer concludes a greater sensitivity is required than that required by B31.3, the required sensitivity should also be specified.

EXTERNAL LOADS DESIGN

There are two components to piping system design. The first is component design as previously discussed. The second is analyzing the designed pressure components as a postulated anchor-to-anchor structural system, subjecting the system to the possible external (operating and environmental) loads, judiciously adding supports to limit stresses due to weight and other loads, but not unduly restraining the piping.

Piping System Considerations

The design should provide for possible isolation means and/or devices to monitor and contain or recover inadvertent discharges of hazardous contents.[10] Open air process units lessen the potential for concentrating hazardous vapors, but increase the potential exposure to personnel near hazardous piping.

Double containment systems offer the opportunity to protect the hazardous piping plus an additional barrier to the release of the hazardous contents of the ''carrier'' pipe (see Chap. B13). The annulus between the carrier and outer pipe can provide insulation, but more important, a location for a leak monitoring system to detect failures of the carrier pipe.[13] The design of double containment systems may present difficulties in accommodating thermal expansion effects and problems in ease of construction.

Hazardous fluids, if released, should be collected in a dedicated system for safe removal and to eliminate any cross-contamination with other services. If the release of hazardous liquids is to the open air, a diked area should be used to contain the spill, and a system for safe removal of the fluid and fumes would be required. If the release is a hazardous gas, a ventilation system may be used to remove hazardous vapors, mists, and dust and supply fresh air to the vicinity of the failed pipe. Such a ventilation system should be equipped with a scrubber to strip the vented air of hazardous materials prior to its release to atmosphere.

Piping Layout

Every effort should be used to ''hard-pipe'' systems using seamless, matching standard pipe and components. Layouts should be routed near possible support points; the support hardware should preferably attach to straight pipe, rather than piping components. The developed (total) length of pipe should be minimized. Expansion loops, unequal Z-bends, and unequal offsets should be used to accommodate thermal expansion effects; while the use of mechanical devices to accommodate thermal expansion or contraction should be avoided. Layouts should facilitate operation and maintenance and protect piping from activities not related to the piping system function or maintenance. Drains and vents should be provided and piping sloped to facilitate liquid drainage and gas venting.

Early identification of hazardous systems will allow layout considerations to be incorporated into the plant housing the system. A structural ''flexibility'' analysis, typically evaluating the startup-shutdown cycle, should be performed to determine if the piping system layout is not unduly restrained. The allowable flexibility stress-range will need to be reduced if the startup-shutdown cycle occurs once a day or more.

System Controls and Safety Systems

Process controls need to be provided to monitor system conditions to protect the system from excessive excursions of pressure, temperature, and fluid flow. The controls should limit the quantity of hazardous fluid that can escape in the event of a pipe rupture.

A systematic monitoring and leak detection program designed to identify small leaks and potential problems as early as possible should be implemented.

It would be unusual for a hazardous piping pressure relief or safety relief system to directly discharge hazardous material into the atmosphere. Most often hazardous systems will be relieved into a closed system of piping and holding or treatment vessels. In this case, the relieving systems must be designed to accommodate the full volume of the maximum possible release. Obviously, the piping portion of the pressure relieving system must also be identified as a hazardous piping. The relieving event will typically introduce significant momentum change forces and possibly dynamic amplification of the discharge forces.

Where hazardous piping is connected to a vessel requiring entry, two stop valves with a ‘‘free blow’’ drain, in between, should be provided as close to the vessel as possible.

External Loads Analyses

The evaluation of sustained stresses due to weight is normally less of a concern than limiting the displacements (sag) between supports. Limiting the sag between supports to about ⅛ in (3 mm) will limit weight stresses and, in vapor systems, the pooling of condensibles. Long vertical risers or downcomers may require vertical supports to limit weight stresses not typically calculated using piping code compliance computer programs.

Short-term sustained load stresses, such as single-phase flow pressure transients, two-phase flow transients, wind, and earthquake, should be evaluated. In general, limiting the displacements due to these short-term loadings will limit their potential to cause a piping collapse or rupture and likewise limit the fatigue damage, if these loadings are frequent. Two-phase flow transient forces may also be reduced by reducing flow velocities. Piping displacements can be limited by active supports, such as hydraulic and mechanical snubbers and sway braces, or passive supports, such as gapped framing around the pipe. Passive supports are preferred over active supports because active supports typically require periodic maintenance. Gapped supports and the piping may each suffer impact loads during these short-term loadings. Passive protection for the piping can be provided by special coverings, sleeves surrounding the insulation, devices or materials designed to take impact, heavier pipe walls, or pads in the vicinity of the gapped support.

The startup-shutdown thermal stress-range (usually based on normal operating conditions, rather than design conditions) is typically analyzed to assure adequate piping flexibility. But all temperature ranges, whether due to normal or abnormal excursions, should be considered and evaluated along with the startup-shutdown range, if significant. Further, all other load ranges, such as due to pressure and short-term hydraulic and mechanical excursions, result in some cyclic (fatigue) damage. However, if an excursion does not often occur and the stress-range of the excursion is less than half the allowable startup-shutdown stress-range, it will probably not result in significant fatigue damage. Remember that because of a low elastic modulus, nonmetallics will experience significant pressure expansion effects similar to thermal expansion, often requiring consideration of their startup-shutdown stress-range. Pressure expansion will occur in metallic piping too, but it is usually only a small fraction of coincident thermal expansion.

The designer should be aware that significant fatigue damage can result from relative anchor motions from any cause and need to be considered in the cyclic (fatigue) analysis. The greatest number of piping failures due to earthquake motions have been caused by excessive relative anchor motions. The number of times that any significant cyclic stress-range occurs must be estimated to properly evaluate a piping system for fatigue.

Creep damage from external loads should only occur from long-term sustained loadings. Using the design temperature to determine the allowable stress for sustained loads should limit external load creep damage.

Evaluation of local stresses may be necessary as the result of rapid fluid temperature changes at geometric discontinuities and at a material discontinuity due to any temperature change.

The magnitudes of flow and mechanically induced vibrations are hard to predict, although they should be expected if flow rates are high or in the vicinity of reciprocating and rotating machinery. If expected, a conservative estimate of their magnitudes may be necessary for analysis or the design should incorporate features to mitigate their effects. Vibration may only be realized after system operation begins and may need to be evaluated then.

Pipe Support Design and Analysis

Pipe supports are part of a piping system and should be of concern in hazardous piping because improper support design and their attachment to the pipe wall have caused failures in piping systems.[7] For example, a support lug welded directly to the wall of a high-temperature pipe under the insulation, with the other end of the lug exposed to the atmosphere can ‘‘pull’’ a crack in the pressure boundary because of the lack of lug flexibility near the pipe wall.

Attachment welds to and a portion of the attachment nearest the pipe wall should be considered as part of the pressure boundary and evaluated and constructed accordingly. A distance no less than $2t$ from the pressure boundary, where t is the thickness of the pressure boundary, should be considered the ‘‘portion of the attachment nearest the pipe wall.’’ This means that within $2t$ materials should be pressure boundary materials and welds should conform to Section IX. Beyond that distance, support materials should be suitable for the service. Note that B31.1 requires support materials for metallic piping to be listed, but that this could be interpreted as the attachment material should be listed for the purpose of considering the interaction between the attachment and the pressure boundary.

The design locations of supports and the method of attachment to the pipe should be reviewed with the piping designer, and to the building with the building designer, for large piping, to assure that those locations and the method of attachment are acceptable.

Generally, supports need not be integrated with the analysis of the piping system (i.e., the support stiffness need not be incorporated in the analysis of the piping system). Incorporating support stiffnesses in the piping analysis will typically reduce loads on the supports. This should only be necessary if the piping loads are very high. However, supports should be stiffer than the pipe at the support point or they may not support the pipe. This should be able to be assessed merely by observation by an experienced support designer.

Pipe supports should support the pipe in the operating condition. For this reason, pipe supports should typically be adjustable and the piping system reviewed during normal operation and pipe supports adjusted as necessary. Pipe supports should also be designed to facilitate sloping the pipe for drainage or venting.

Mechanical expansion anchors in concrete should be avoided; cast in place or epoxy grouted or equivalent anchors are preferable.

Threaded hangers should be designed so that the threads are not subject to bending.

OPERATING MANUAL PREPARATION

After completing the design, the designer should prepare an operating manual which describes the normal and abnormal operating and environmental conditions assumed in the design of the hazardous piping. Recommended operating and maintenance instructions for active components should be included. Manufacturers of active components, such as valves, pumps, instrumentation, and snubbers, will typically provide operating and maintenance instructions. All design drawings, including component manufacturer's design drawings, should also be included. The operating manual should include any other information the designer concludes is necessary to guide the operator in operating and maintaining the hazardous piping system safely. Recall, as was previously stated, that a composite system diagram (see Fig. C10.1) may be useful to communicate the piping system's design features to the operator.

FABRICATION AND ERECTION

Fabrication and erection of hazardous piping should be performed in as clean conditions as possible to avoid any contamination that would compromise the process that is to occur with the finished system.

Forming

It would be wise to verify that piping code required heat treatment is performed on identified materials after cold or hot forming of components.

Welding and Bonding

The welding and bonding procedures established by the fabricator's and erector's QC programs should be followed. The fabricator and erector may augment the required examination by additional spot checking of the welding or bonding being performed.

Butt Welds. A butt weld is expected to fill the weld groove between two pieces of pipe from the inside surface to the outside surface of the pipe. Any deviations from this practice, such as between two heavier than nominal pipe fittings, should be reviewed with the designer.

The piping layout and shop fabrications should consider how to facilitate field welding; for example, a field weld should not be located too near a wall such that the welder must use a mirror or other device to finish the weld.

Butt weld joints should be made without the use of backing rings and inserts, unless otherwise permitted by the engineering design.

Branch Connection Welds. Shop welding of branch connections is preferred to field fabrication. Non-90° branches are more difficult to fabricate than 90° branches. The engineering design may detail required branch connections. If not, it is recom-

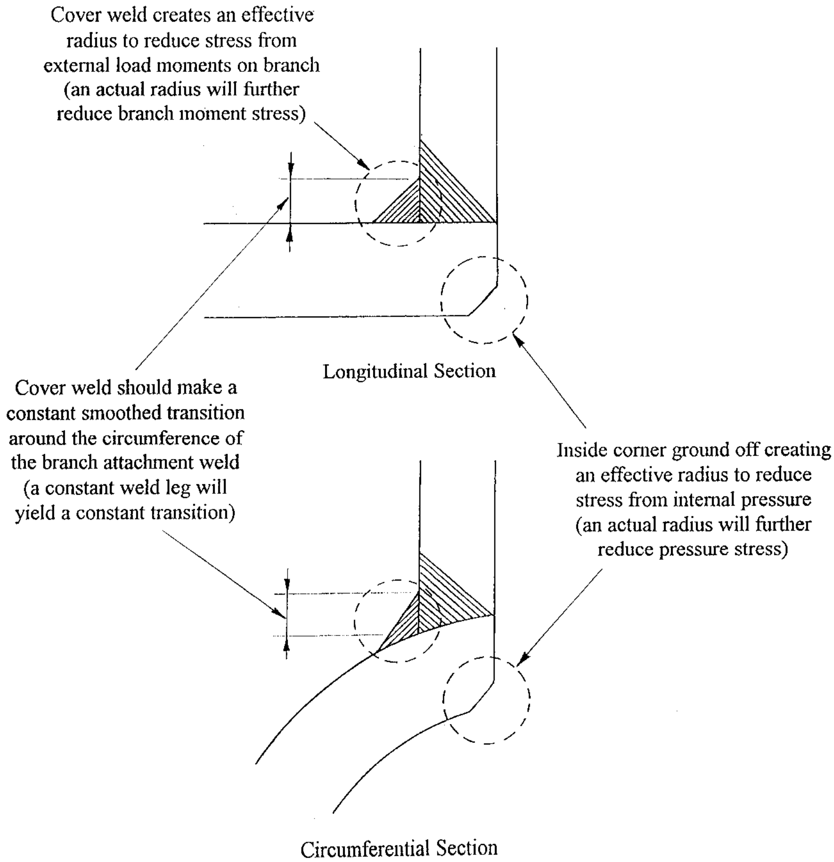

Cover weld creates an effective radius to reduce stress from external load moments on branch (an actual radius will further reduce branch moment stress)

Longitudinal Section

Cover weld should make a constant smoothed transition around the circumference of the branch attachment weld (a constant weld leg will yield a constant transition)

Inside corner ground off creating an effective radius to reduce stress from internal pressure (an actual radius will further reduce pressure stress)

Circumferential Section

FIGURE C10.3 Recommended branch connection details.

mended that the fabricator or erector consider the following good practices to provide quality branch connections (see Fig. C10.3):

The sharp inside corner of large high-pressure branch connections should be ground off, creating an effective inside radius. The outside welds to the header should not have abrupt corners; cover welds, such as those specified in B31 codes, should be used to provide an effective radius between the branch attachment weld and the header. The cover weld should effectively make a constant smoothed transition around the circumference between the attachment weld and the header. For large branch connections, the cover weld should probably be larger than the minimum typically required by the B31 codes.

Socket Welds. Unless otherwise specified in the engineering design, a socket weld is expected to be a 45° fillet filling the joint created by inserting the pipe into a

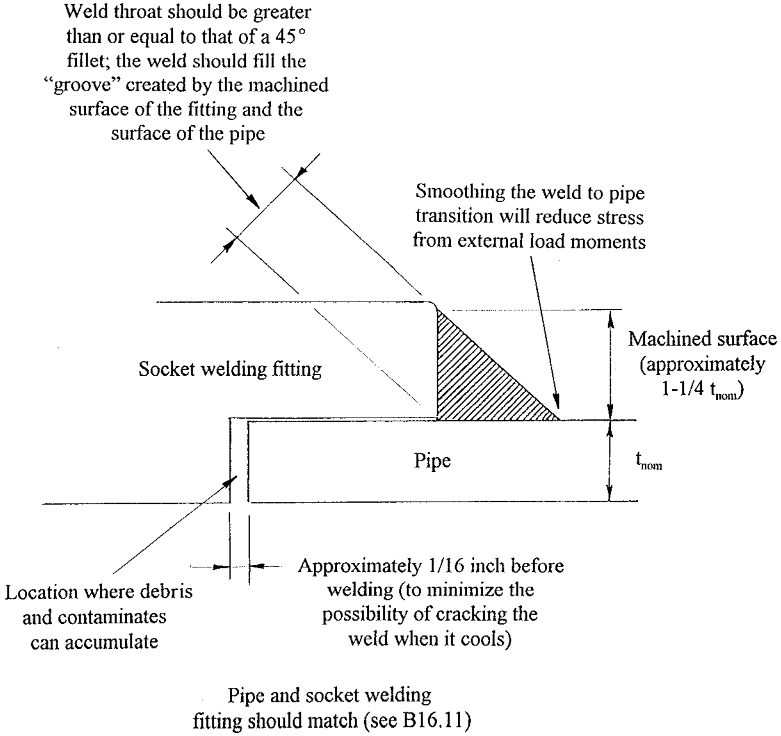
Weld throat should be greater than or equal to that of a 45° fillet; the weld should fill the "groove" created by the machined surface of the fitting and the surface of the pipe
Smoothing the weld to pipe transition will reduce stress from external load moments
Socket welding fitting
Machined surface (approximately 1-1/4 t_nom)
Pipe
t_nom
Location where debris and contaminates can accumulate
Approximately 1/16 inch before welding (to minimize the possibility of cracking the weld when it cools)
Pipe and socket welding fitting should match (see B16.11)

FIGURE C10.4 Recommended socket weld details.

matching socket welding fitting (see Fig. C10.4). The weld is expected to fill the joint to the edge of the machined boss on the face of the fitting. This means the leg length (size) of the fillet weld is approximately 1¼ times the nominal matching pipe thickness. Weld buildup on the unmachined surface of the socket welding fitting is not expected. Piping codes may mention a preference for a concave (smoothed) weld, but such a weld should not reduce the throat of the weld below that of the 45° fillet expected. The concave smoothing should only be done at the toe of the weld.

Bonding. The fabricator and erector should take care that nonmetallic components and bonding materials are protected from damage or deterioration prior to assembly.

The fabricator and erector should be careful during fit-up that joints to be bonded are well supported and that the bond is allowed to cure for the time required by the BPS before construction supports are moved.

Mechanical Joints

Mechanical joints should be assembled in accordance with the requirements of the fabricator or erector's QC program.

Flanges. Large flanges and their gaskets need to be carefully aligned prior to bolting. The torquing of the bolts needs to follow a sequence to achieve the required bolt efficiency (i.e., bolt tightness) without overloading the flange or overstressing the bolts. The gasketing, if not specified in the engineering design, needs to be reviewed with the designer.

Small flanges may not need to comply with the alignment requirements of the piping codes. The flexibility of the attached small piping may be sufficient to not overstress the flange elements; however, this should be reviewed with the designer.

Threaded Connections. Where the erector uses threaded connections not specified, but not prohibited, in the construction documents, the erector should verify the acceptability of such. Where the erector finds threaded connections specified in the construction documents but seal welds are not, the erector should consult the designer regarding his intentions.

Other Mechanical Joints. Fabricators and erectors should make sure that all mechanical joints are properly assembled by following the manufacturer's recommendations, which typically describe a method to verify proper assembly. Documentation of the verification may be warranted.

Erection. The piping should be erected in accordance with the engineering design and the piping code used in the design. Deviations from the design required for constructability should be reviewed with the designer.

Bending or forming required for fit-up or alignment may require postforming heat treatment in accordance with the piping design code.

Temporary supports for erection should not damage the piping or allow excessive deformations of the piping or equipment to which the piping is attached.

After completing the installation of the piping the original design drawings should be revised to show all changes made; that is, the piping system drawings should be "as-built" and made part of the turn-over documentation.

EXAMINATION, INSPECTION, AND TESTING

Most piping codes distinguish between *examination* and *inspection*, examination being the responsibility of the manufacturer, fabricator, or erector, and inspection being the responsibility of the owner. There is a tendency to limit examination and inspection to the welds, but more than the welds should be looked at prior to piping system startup, especially for hazardous piping.

The manufacturer and erector can use various NDE methods to minimize substandard workmanship, and the owner can employ the same or different methods to verify the manufacturer's or erector's work. However, most piping codes specify the examination (NDE) methods with little opportunity for variations. Along with the prescribed methods, these same piping codes specify acceptance criteria appropriate to the type and extent of required examination. Code inspection is normally limited to the owner reviewing the manufacturer, fabricator, or erector's work to the extent that the inspector is confident that the manufacturer, fabricator, or erector has performed the proper examinations and has made repairs where appropriate. However, the owner's inspection should include an overall review to assure that the construction meets the engineering design.[2]

Because the piping is considered hazardous, the owner or designer may wish to impose more rigorous examination requirements (i.e., either NDE methods or acceptance criteria) than is required by the piping code being used. For example, the designer may want to limit the porosity in a butt weld to less than that permitted in a highly corrosive, high cyclic service. But more rigorous or multiple NDE methods may not be required by the code being used and the acceptance criteria of the codes is only appropriate for the required examination. This is true for all ASME pressure component codes and is illustrated by paraphrasing a 1985 B31.1 Interpretation.[17]

> *Paraphrased Question*: When an NDE method is not required by B31.1, but is used, must the acceptance criteria meet the requirements of B31.1?
>
> *Paraphrased Reply*: The acceptance criteria are not within the scope of B31.

In addition, piping codes typically specify NDE methods that have been proven over long periods of use. Thus, if more rigorous, alternate, or newer NDE methods are imposed by the owner or designer, then acceptance criteria appropriate for the NDE method and extent of examination must also be developed and provided in the engineering design. It should be noted that the code examination methods and their acceptance criteria do not correlate well to specific failure modes. Defects detected by NDE methods are typically repaired because they are perceived rather than relating the defect to a specific failure mechanism. The detection of defects having little or no bearing on piping component performance may result in unnecessary, and sometimes counterproductive repairs.[7] Fracture mechanics holds the promise of one day being able to correlate defects with failure modes, but that is not necessarily a given in 1999.

Adapting the B31.3 in-process examination for nonmetallic piping may be prudent.

The owner's inspection should include a detailed review of the erected system prior to startup to ensure that the pipe components and sizes, support types and orientation, valve types and orientation, and specialty items are in accordance with the engineering design. The materials of construction could be verified by spot checks or more rigorous forms of examination, if this was not already performed during construction. During startup the owner's inspection should also include verification that piping moves as is intended (e.g., spring hanger indicators move to the hot location) and that no undue vibrations or movements are observed.

Examination of a branch connection and socket weld joints is normally limited to visual and surface examinations. However, with careful interpretation, radiography can provide relevant information about these fabrications and, further, it might be expected that the welding done could be of better quality if the manufacturer's, fabricator's, or erector's welders knew that some of their fabrications were going to be evaluated by radiography. Recall from the previous discussion that this examination may be beyond the requirements of the design piping code, and acceptance criteria would need to be based on a prior agreement between the owner and the contractor.

Leak testing of the erected piping system is a normal requirement of piping codes and should be performed as required by the piping code used in the design. The required leak testing should be performed before the hazardous piping system is painted or the insulation is applied so that the system welds and other joints may be viewed as completed or assembled. Where a hydrotest is impractical, a pneumatic test or more rigorous examination may often be substituted. A sensitive leak test[2] should be used to augment whatever other leak testing methods are used. If testing requirements are not specified in the engineering design, the erector should review with the designer the expected leak-testing requirements.

A recent and very practical B31.3 code change permits exempting ''closure'' welds from hydrotesting, if in-process and either radiography or ultrasonic examinations are substituted. This exemption is also useful for dealing with additions of small piping (e.g., instrumentation taps) to piping already tested.

OPERATION AND MAINTENANCE

The operator should operate the piping system within the design parameters of the system. The operator should be trained to understand the design parameters, other possible events that could cause a failure, and operating conditions that can degrade the system over time. The operator should be familiar with the hazardous material handling system in sufficient detail to be able to identify signs of system distress should they appear. One possible source of this information is the plant hazards analysis study and the results of any continuing hazards analyses.

If design pressures or temperatures exceed the design limits by more than 10 percent, consideration should be given to having an engineering evaluation of the excursion performed. The same consideration should be given if the piping system experiences an abnormal operation not considered in the original design or is exposed to a severe environmental event (e.g., hurricane or major earthquake).

It would be wise to maintain an operating log (time versus operating pressures and temperatures, including outage time) to be able to evaluate fatigue and creep damage. This need not be a minute by minute log, but could log average values over a given period between identified maximums and minimums, with excursions beyond the maximums and minimums documented. Based on an understanding of the materials of construction, the original designer could be consulted or an engineering study be used to devise such a log.

Maintenance of the hazardous piping system should include establishing an in-service inspection program to detect system deterioration before such deterioration can cause a failure. The in-service inspection could be based on emerging (in 1999) risk-based technology, tailored to the piping system. Risk-based technology seeks to rank the piping system components as to the probability of failure and the consequences of failure and implement inspection based on the ranking. The ranking is based on the component and the fluid contents: component materials, geometry, and the history of like components; and fluid content's chemistry, conditioning, flow, and temperature. Through-insulation radiography has been successfully used in such a program to screen sections of a piping system for local thinning, followed by ultrasonic testing to refine thickness measurements. Other existing and developing NDE methods can be used for in-service monitoring, should they prove to be appropriate. Acoustic emission is possibly one such appropriate developing method; the acoustic emission methods endeavor to identify locations of high stress by ''listening'' for material grain-structure fracturing.

As of 1999, several efforts are under way to develop standards for flow evaluation and inspection planning. These include:

- B31.1 is revising its nonmandatory appendix ‘‘Recommended Practice for Operation, Maintenance, and Modification of Power Piping Systems’’ and considering making it mandatory.
- B31.8 and the API are developing ‘‘fitness for service’’ rules.
- ASME and the API are developing RBI guidelines for the power and petrochemical industries.
- ASME Post-Construction Committee is developing new standards for post-construction conditions.

These activities should be monitored for the completion and publication of their efforts.

The operator should maintain maintenance records of the system and its critical components.[12] These records should be of sufficient detail to provide information of any significant change to the physical structure of the pipe or piping components. Any changes in operating parameters should also be documented, since changes in temperature, pressure, flow, or the amount of cycling, or the chemical composition of contents, can result in increased corrosion, erosion, decreased serviceability of components, or a decrease in the life expectancy of materials.

Piping which operates in the creep range or is subjected to high thermal expansion stresses will self-spring (or shake down). Caution must be exercised when unbolting flanges or cutting loose piping that has self-sprung. Large movements of the flanges or pipe ends may result. If no problems existed with the previous operation of near equipment, reassembly of the piping should be done by pulling the flanges or pipe ends together and rebolting or rewelding.

The pipe supports may offer considerable information about system performance. Lift off or adjustments to maintain piping in its design location may be an indication of piping system drift or the results of system loads not considered in the original design. Spring supports should be monitored to see if operating between the operating and ambient conditions moves the load indicator between the operating and ambient marks on the spring hanger assembly; nonmovement would obviously indicate the spring is not functioning; variations from the expected movements may indicate piping system drift or loads at variance with the predicted design loads.

MODIFICATIONS AND REPAIRS

Hazardous piping system modifications should be made in accordance with the latest piping codes. The interaction between the new piping and the existing piping should be evaluated. Piping system drawings should be revised to show the modifications.

Repairs should also be made in accordance with the latest piping codes. The effect that the repair will have on the piping system should be considered. The repair should be fully documented as to the cause necessitating the repair and whatever repairs are made. Any revisions to the piping drawings necessary to reflect the repair should be made (e.g., due to erosion/corrosion damage a segment of pipe might be repaired by a replacement segment of a more corrosion-resistant material).

TABLE C10.2 Design and Operation Recommendations for Hazardous Piping

"DO"	"DON'T"
Identify and give hazardous piping systems special consideration.	View hazardous piping systems as conventional systems.
Evaluate consequence of piping failure (for example, quantities released, personnel exposure, harm to the environment).	Assume piping system cannot fail.
Understand operating modes of the system, including variations in normal and abnormal operating conditions.	Expect operating conditions to be without variation.
Consider dynamic effects, such as fluid hammering, vibrations, earthquake.	Overlook potential dynamic effects.
Perform stress analysis incorporating all the loadings expected.	Disregard short-term loadings combined with sustained loads or the fatigue effects of short-term loadings.
Select materials that will not deteriorate in service.	Choose materials sensitive to corrosion or erosion.
Use ductile materials.	Use low-ductility materials, such as cast-iron or glass.
Eliminate or minimize the use of mechanical joints.	Use mechanical joints without considering means to safeguard them.
Provide smooth transitions at welded joints.	Have abrupt changes in joint geometry.
Choose valves to be consistent with hazardous service.	Use stem packing designs that can leak.
Provide designs to minimize fugitive emissions.	Forget to perform a sensitive leak test with an appropriate sensitivity.
Use appropriate NDE methods to assure quality fabrication and erection.	Limit NDE methods to those in codes and standards if newer methods will give reliable results.
Try to provide advice to plant designers regarding piping layout needs.	Believe that plant designers will understand hazardous piping layout needs.
Use piping geometry to compensate for thermal expansion and contraction.	Use expansion joints.
Provide a collection and disposal system for pressure relief of hazardous systems.	Vent directly to atmosphere without proper treatment.
Segregate hazardous piping systems during fabrication, erection, and testing to facilitate all requirements being met.	Treat hazardous piping like other systems.
Design and maintain supports as part of the piping system.	Treat piping supports as independent components.
Provide design details of critical elements to construction.	Leave critical fabrication and assembly details to be provided by field.
Provide mechanism for positive identification of piping materials of construction.	Rely on specifying materials with no follow-up.
Provide an in-service monitoring program for early detection of problems.	Wait for a catastrophic event.
Maintain service records throughout life of system.	Repair piping without documenting it.
Periodically examine critical elements.	Install system and forget about it.

REFERENCES

1. Trevor A. Kletz, *What Went Wrong?—Case Histories of Process Plant Disasters,* Gulf Publishing Company, 1985.
2. American Society of Mechanical Engineers, B31.3 *Process Piping,* American Society of Mechanical Engineers, NY, 1999 Edition.
3. Occupational Safety and Health Administration, 29 CFR Part 1910, ''Process Safety Management of Highly Hazardous Chemicals; Explosives and Blasting Agents; Final Rule.''
4. F.A. Patty, *Industrial Hygiene and Toxicology,* Interscience Publishers, Inc.
5. N. Irving Sax, *Handbook of Dangerous Materials,* Reinhold Publishing Corp., NY.
6. Mark S. Dennison, *OSHA and EPA Process Safety Management Requirements, A Practical Guide for Compliance,* Van Nostrand Reinhold, A division of International Thompson Publishing Inc., New York, NY, 1994.
7. Helmut Thielsch, *Defects & Failures in Pressure Vessels & Piping,* Reinhold Publishing Corp., NY, 1965.
8. M.W. Kellogg, *Design of Piping Systems,* John Wiley & Sons, NY, 1967.
9. Philip A. Schweitzer, *Handbook of Corrosion Resistant Piping,* Industrial Press, NY, 1969.
10. Walter R. Payne, ''Toxicology and Process Design,'' *Chemical Engineering,* April 1978.
11. Michael J. Wallace, ''Controlling Fugitive Emissions,'' *Chemical Engineering,* August 1979.
12. A.S. Krisher, ''Plant Integrity Programs,'' *Chemical Engineering Progress,* 1986.
13. C.G. Ziu, *Handbook of Double Containment Piping Systems,* McGraw-Hill, New York, NY, 1995.
14. National Association of Corrosion Engineers, ''Corrosion Data Survey,'' Houston, TX, 1985.
15. A.R.C. Markl, ''Piping-Flexibility Analysis,'' ASME Paper 53-A-51, American Society of Mechanical Engineers, NY, 1953.
16. Expansion Joint Manufacturers Association, ''Standards of the Expansion Joint Manufacturers Association, Inc.,'' White Plains, NY, 1980.
17. American Society of Mechanical Engineers, ''Interpretations No. 7 to ANSI/ASME B31.1,'' American Society of Mechanical Engineers, NY, 1985.

CHAPTER C11

SLURRY AND SLUDGE PIPING

Ramesh L. Gandhi
Principal Engineer
Bechtel Corporation
San Francisco, CA

DEFINITION AND BACKGROUND

Slurry is a mixture of solids and liquid. A sludge denotes a mud or a concentrated slurry having a considerable amount of fine material that imparts high viscosity. Typical examples of slurries are the solid-liquid mixtures encountered in mineral processing plants and dredged material from waterways and dams. Most of the slurries are made up with water. However, industrial paints, rocket fuel, coal-oil mixture, and coal-methanol slurries are made up with liquids other than water.

River sediment in the form of slurry appears to have been handled since ancient times.[1] All ancient civilizations arose on river banks. Maintenance of waterways requires periodic dredging which results in a sand and silt water slurry. Today dredging represents the largest volume of solids handled in slurry form. Slurry transport is also used for dam construction.

Blatch[2] reported the first hydraulic test results for a sand-water slurry flowing through NPS 1 (DN 25) pipe. Gregory,[3] O'Brien and Folsom,[4] and Howard[5] reported results of tests of clay, sand, and gravel slurries. The flow of muds and sludges through pipes was first examined by Caldwell and Babbit.[6] The first large-scale experimental program on the flow of slurries through pipes was reported by Durand.[7] The correlations proposed by Durand and his coworkers serve as a basis for the present-day design methods.

Design of a slurry piping system involves

- Selection of pipe diameter
- Estimate of friction loss and pumping requirements
- Selection of pipe material, valves, and fittings
- Selection of pumps
- Selection of instruments and control system for safe and reliable operation

Pipelines transporting liquids such as oil and water can be operated at any velocity up to their design limits. In most slurry applications, a certain minimum velocity needs to be maintained, to keep solids from settling out in horizontal sections of the pipe. The velocity below which particles tend to settle out and form a deposit in the pipe is called the *deposition velocity.* The pipe diameter should be selected such that the velocity in the pipeline is maintained above the deposition velocity over the operating range of flow rates.

The operating flow rate range is determined by the expected range of solids throughput and slurry concentration. *Solids throughput* is defined as the weight of solids to be transported per unit time. It is normally expressed in tons per hour (tons/h). The slurry concentration is expressed as the weight of solids per unit weight of slurry, or volume of solids per unit volume of slurry.

The slurry concentration may be established by the requirements of the upstream or downstream processing facilities. This is normally the case with in-plant piping. In the case of long-distance pipelines, it becomes advantageous to adjust the slurry characteristics and concentration to reduce the cost of the pipeline system. An economic study is performed to select parameters acceptable to upstream and downstream plants while offering economies in pipeline construction and operation.

The deposition velocity and friction loss in a given size pipe at a given concentration depend upon the slurry flow behavior. The selection of pipe material, valves, fittings, and pumps depends upon the velocity of flow, abrasivity of the slurry, and pumping pressures which are in turn governed by the slurry flow behavior.

SLURRY FLOW BEHAVIOR

Flow of slurry in pipes depends upon the interaction between the solids and liquid as well as between the slurry and the pipe.

Depending upon the velocity of flow, pipe diameter, solids size distribution, fluid properties, and solids characteristics, four different flow conditions can be encountered in a horizontal or nearly horizontal pipeline.[8] These are homogeneous flow, heterogeneous flow, intermediate regime, and saltation regime.

Homogeneous Flow

Homogeneous flow implies that the solid particles are uniformly distributed across the pipeline cross section. Homogeneous flow, or a close approximation to it, is encountered in slurries of high concentrations and fine particle sizes. Slurries exhibiting homogeneous flow properties do not tend to settle and form a deposit under flowing conditions. Typical examples of homogeneous slurries are sewage sludge, coal-water fuel, clays, drilling mud, paper pulp, titania, fine limestone (cement kiln feed slurry), thorium oxide, and many other finely ground materials.

Heterogeneous Flow

In heterogeneous flow conditions, there is a pronounced concentration gradient across the pipeline cross section. Slurries at low concentration with rapidly settling (coarse particles) solids generally exhibit heterogeneous flow. Typical examples are sand and gravel slurries, coarse coal slurries, and coarse tailings slurries.

Intermediate Regime

This type of flow occurs when some of the particles are homogeneously distributed while others are heterogeneously distributed. Most industrial applications involve a wide range of particle sizes. Intermediate regime of flow is expected with transportation of tailings slurry from mineral processing plants and transportation of coal-water slurries.

Saltation Regime

The fluid turbulence may not be sufficient to keep fast settling particles in suspension. The particles travel by discontinuous jumps or roll along a sliding or stationary bed on the pipe bottom. This type of flow will occur with coarse sand and gravel slurries.

IN-PLANT SYSTEMS

In-plant systems generally involve horizontal, vertical, and inclined sections of pipe. The pipe lengths are generally short. A large number of bends, valves, and fittings may be present in such systems. The pressure losses due to bends, valves, and fittings may be a significant part of the total friction loss. Static head due to change in pipe elevation may be a significant part of the total pumping head requirements for in-plant systems. Typical examples of in-plant system are slurry preparation plants, mineral beneficiation plants, and municipal and industrial waste treatment plants.

In a mineral beneficiation plant, different types of slurries may be handled in the same plant. The slurry concentration as well as the particle size distribution of the slurry may change as the mineral passes through various grinding, separation, and settling stages. Large variations in slurry characteristics and flow rate may be encountered in the same section of pipe owing to changes in ore characteristics or plant operations. The pipes should be sized for these anticipated variations.

LONG-DISTANCE PIPELINES

A number of slurry pipelines have been built to transport solid particles. The materials transported include coal, limestone, kaolin clay, China clay, iron concentrate, copper and nickel concentrates, phosphate concentrates, gold ore, fly ash, sludges, and mineral tailings. Because of the relatively long length of these pipelines, pressure losses through bends and fittings are not a significant part of the total friction loss. Pumping requirements should include changes in pipeline elevation which could be substantial in long-distance pipelines traversing rugged terrain.

Because of the relatively large investment required for a long-distance pipeline, it is generally advantageous to adjust the characteristics of the slurry to suit the pipeline requirements. The slurry concentration, particle size distribution, and throughput are generally controlled within relatively narrow operating limits. The material is generally finely ground to obtain a pseudohomogeneous flow condition in the pipeline.

Slurry pipeline systems range from single-station low-pressure centrifugal pump installations to multistation high-pressure reciprocating pump systems. In all cases, the basic requirement for successful slurry pumping is to maintain pipeline flow above a minimum operating velocity. The minimum operating velocity is set at a desired margin of safety above the critical velocity. The critical velocity in turn is determined by the solids screen analysis, solids density, and concentration as well as the specific system characteristics—pipe diameter, slurry temperature, etc.

In a positive displacement system, the flow is controlled by varying the pump speed. This can be accomplished by the use of a fluid coupling, eddy current coupling, ac or dc variable-speed drive, or a hydraulic clutch system. Diesel-driven pumps have also been used in remote areas where electric power was not available. For optimum system efficiency, most pumps should be operated at their maximum design speed.

A short list representative of the long-distance slurry pipelines in use throughout the world is presented in Table C11.1.

TABLE C11.1 List of Selected Long-Distance Slurry Pipelines

Material	System, location	Throughput, mmtpy	Length, mi	Start of operation
Coal	Consolidation Coal, Ohio	1.2	105	1957
	Russia	4.0	7	1966
	France (Merlebach)	1.5	6	1954
	Black Mesa, Arizona	5.0	273	1970
	Japan	0.3	16	1965
Limestone	Trinidad	0.5	6	1959
	Rugby, England	1.5	57	1964
	Calaveras, California	1.4	17	1971
	Gladstone, Australia	2.0	15	1981
Iron concentrate	Savage River, Tasmania	2.3	53	1967
	Pena Colorada, Mexico	1.6	30	1974
	Las Truchas, Mexico	1.4	17	1975
	Sierra Grande, Argentina	1.9	20	1977
	Samarco, Brazil	12.0	247	1978
	Kudremukh, India	7.5	42	1980
	La Perla, Mexico	4.5	237	1983
Iron sand	Waipipi, New Zealand	1.0	4	1971
Copper concentrate	Bougainville, Papua, New Guinea	1.0	17	1972
	West Irian, Indonesia	0.3	69	1973
	Pinto Valley, Arizona	0.4	11	1974
	Kennecott Chino, New Mexico	0.7	7	1982
	KBI, Turkey	0.9	40	1973
	Kennecott, Utah	0.7	17	1987
Phosphate concentrate	Valep, Brazil	2.0	70	1979
	Chevron, Utah	1.8	94	1986
	Makon, India	0.1	7	1983

SLURRY CHARACTERISTICS

Slurries may be classified as settling suspensions and nonsettling suspensions. Settling suspensions require turbulence to maintain individual particles in motion or in suspension. With finely divided solids, homogeneous flow could also be achieved for settling suspensions in turbulent flow. Nonsettling suspensions, as the name implies, do not settle, even under the no-flow condition.

Mineral concentrates, tailings, and coal slurries require turbulence to maintain particles in suspension. Digested sludge and coal-water fuel slurries do not settle under static conditions.

The flow characteristics of a settling suspension are largely governed by the settling velocity of solids in it. The flow characteristics of a nonsettling suspension are governed by its rheological characteristics and densities. Most commercial slurries contain appreciable amounts of finely divided solids that change the rheological properties of the suspending fluid. For these slurries, both the settling characteristics of solids and rheological properties and the density of the slurry become important.

Slurry Density

The *density* of a slurry is given by

$$\rho_m = \frac{100}{C_w/\rho_s + (100 - C_w)/\rho_l} \tag{C11.1}$$

where ρ_l = density of suspending liquid, lb/ft^3 (kg/m^3).
ρ_m = density of mixture, lb/ft^3 (kg/m^3)
ρ_s = density of the solids, lb/ft^3 (kg/m^3)
C_w = solids concentration by weight in slurry, %

Measurements of slurry concentration, solids density, and liquid density are straightforward. The slurry concentration is obtained by evaporating a liquid component from a known weight of slurry and measuring the weight of dried solids.

The density of slurry in a pipe may be measured by using a nuclear density meter or by measuring head loss per unit length along each vertical leg of a test section arranged as an inverted U. The slurry density may also be measured by collecting a sample in a suitably designed specific-gravity bottle or by a Marcy balance. Note that these devices measure the specific gravity of slurry. The density of slurry is computed by multiplying its specific gravity by the density of water.

Example C11.1. Slurry concentration is determined by drying to constant weight a sample of slurry in an oven maintained at 220°F (104°C). Determine the slurry concentration based on the following data:

Weight of empty dry container	0.1 lb (0.0454 kg)
Weight of container plus slurry	0.32 lb (0.1454 kg)
Weight of container plus dry solids	0.21 lb (0.0954 kg)

Solution

$$\text{Weight of dry solids} = 0.21 - 0.1$$
$$= 0.11\ \text{lb}\ (0.05\ \text{kg})$$
$$\text{Weight of slurry} = 0.32 - 01$$
$$= 0.22\ \text{lb}\ (0.01\ \text{kg})$$
$$\text{Weight percent solids } C_w = \text{weight of solids} \times \frac{100}{\text{weight of slurry}}$$
$$= 50\%$$

Example C11.2. Determine the density of the slurry considered in Example C11.1 if the solids and liquid specific gravities are 3.0 and 1.0, respectively.

Solution

$$\text{Density of solids } \rho_s = 3.0 \times 62.4\ \text{lb/ft}^3 (3000\ \text{kg/m}^3)$$
$$\text{Density of liquid } \rho_l = 1.0 \times 62.4\ \text{lb/ft}^3 (1000\ \text{kg/m}^3)$$
$$\text{Solids concentration } C_w = 50\%$$

Substituting into Eq. (C11.1), we get

$$\text{Density of slurry } \rho_m = 93.6\ \text{lb/ft}^3 (1500\ \text{kg/m}^3)$$

Example C11.3. A nuclear density meter gives a slurry specific gravity of 1.167 for a coal-water slurry. If the specific gravity of coal is 1.4, find the weight percent coal in slurry.

Solution

$$\text{Density of coal slurry } \rho_m = 1.167 \times 62.4\ \text{lb/ft}^3$$
$$= 72.82\ \text{lb/ft}^3 (1167\ \text{kg/m}^3)$$
$$\text{Density of water } \rho_l = 62.4\ \text{lb/ft}^3 (1000\ \text{kg/m}^3)$$
$$\text{Density of coal } \rho_s = 1.4 \times 62.4\ \text{lb/ft}^3$$
$$= 87.36\ \text{lb/ft}^3 (1400\ \text{kg/m}^3)$$

Rearranging Eq. (C11.1), we get

$$C_w = 100 \frac{\rho_s(\rho_m - \rho_l)}{\rho_m(\rho_s - \rho_l)}$$
$$= 50\%$$

Slurry Rheology

In the presence of subsieve particles (those smaller than 35 μm) and at relatively high concentrations, the slurry flow properties are governed by its rheology. Slurries that do not contain particles smaller than 35 μm or that are at low concentrations exhibit heterogeneous flow behavior. Heterogeneous flow properties are not governed by slurry rheology.

Rheology is the relationship between the shear stress and the corresponding rate of shear in a slurry under laminar-flow conditions. The friction loss in a pipeline depends upon the rheology of the slurry in homogeneous and intermediate flow regimes. In the case of pure liquids, the shear stress is directly proportional to the rate of shear in laminar flow. The proportionality constant is called the *viscosity* of the liquid. This type of flow behavior is called *newtonian.* Liquids containing long-chain polymers and finely ground solids exhibit a nonlinear relationship between shear stress and the rate of shear under laminar-flow conditions. Such slurries are said to exhibit *nonnewtonian* flow properties. Depending upon the size distribution of solids, slurry concentration, and interaction between solids and liquid, the slurry may have newtonian or nonnewtonian flow properties.

Slurries containing nonflocculated particles generally exhibit newtonian flow behavior. Nonnewtonian flow behavior is generally encountered with flocculated suspensions.

Some slurries require a certain minimum stress before flow starts. For example, fresh concrete does not flow over a chute until a certain slope is exceeded. The slurry is said to possess a yield stress which must be exceeded to initiate flow.

The rheology of a newtonian fluid is expressed by its viscosity, which is the ratio of shear stress to the corresponding rate of shear. Two or more parameters are needed to describe the rheological properties of a nonnewtonian liquid. Bingham plastic, pseudoplastic, and yield pseudoplastic models are generally used to describe the flow behavior of slurries. The relationships between the shear stress and shear rate for these rheological models are as follows:

Newtonian:

$$\tau = \mu\gamma \tag{C11.2}$$

Bingham plastic:

$$\tau = \tau_y + \eta\gamma \tag{C11.3}$$

pseudoplastic:

$$\tau = K\gamma^n \tag{C11.4}$$

yield pseudoplastic:

$$\tau = \tau_y + K\gamma^n \tag{C11.5}$$

where τ = shear stress, lbf/ft^2 (Pa)
τ_y = yield stress, lbf/ft^2 (Pa)
γ = rate of shear (velocity gradient), 1/s
μ = newtonian viscosity, lbf·s/ft^2 (Pa·s)
n = flow behavior index
K = consistency index, lbf·s^n/ft^2 (Pa·s^n)

Example C11.4. The following rheology test results were obtained for a sample of a mineral tailings slurry containing 50 percent solids by weight.

Rate of shear, 1/s	Shear stress τ, lbf/ft^2 (Pa)	$\tau - \tau_y$, lbf/ft^2 (Pa)
0	0.1250 (6.000)	0.0000 (0.000)
0.1	0.1256 (6.029)	0.0006 (0.029)
1.0	0.1280 (6.144)	0.0030 (0.144)
5.0	0.1343 (6.445)	0.0093 (0.445)
10	0.1400 (6.718)	0.0150 (0.718)
20	0.1494 (7.168)	0.0244 (1.168)
40	0.1647 (7.900)	0.0397 (1.900)
80	0.1895 (9.088)	0.0645 (3.088)
100	0.2004 (9.610)	0.0754 (3.610)
150	0.2250 (10.79)	0.1000 (4.79)
200	0.2474 (11.86)	0.1224 (5.86)
300	0.2876 (13.79)	0.1626 (7.79)
400	0.3240 (15.53)	0.1990 (9.53)
500	0.3575 (17.13)	0.2325 (11.13)
600	0.3890 (18.64)	0.2640 (12.64)
700	0.4190 (20.08)	0.2940 (14.08)
800	0.4480 (21.47)	0.3230 (15.47)

Solution. The shear stress at zero shear rate is 0.125 lbf/ft^2. The slurry yield stress is therefore 0.125 lbf/ft^2 (6 Pa). Find the difference between the observed shear stress τ and the yield stress τ_y at each shear rate shown in the third column of the above table.

A plot of $\tau - \tau_y$ versus shear rate on an arithmetic scale (Fig. C11.1) shows a nonlinear relationship. A similar plot on log-log scale (Fig. C11.2) shows a linear relationship (note that the data for zero shear rate is excluded). The value of τ at a shear rate of 1 gives the value of K in lbf·s^n/ft^2. (Pa·s^n). The slope of the line gives the value of the flow behavior index n. The results from the graph are

$$K = 0.003\,\text{lbf}\cdot\text{s}^n/\text{ft}^2(0.144\,\text{Pa}\cdot\text{s}^n)$$

$$n = 0.7$$

Estimate of Slurry Rheology

Correlations between slurry concentration and rheology of the slurry for newtonian and Bingham plastic slurries have been proposed by various investigators. These relationships may be used for preliminary estimates when rheology test results are not available.

The viscosity of a slurry depends upon the volume fraction of solids in slurry. The volume fraction of solids is determined by using

$$C_v = C_w \frac{\rho_m}{100\rho_s} \qquad \text{(C11.6)}$$

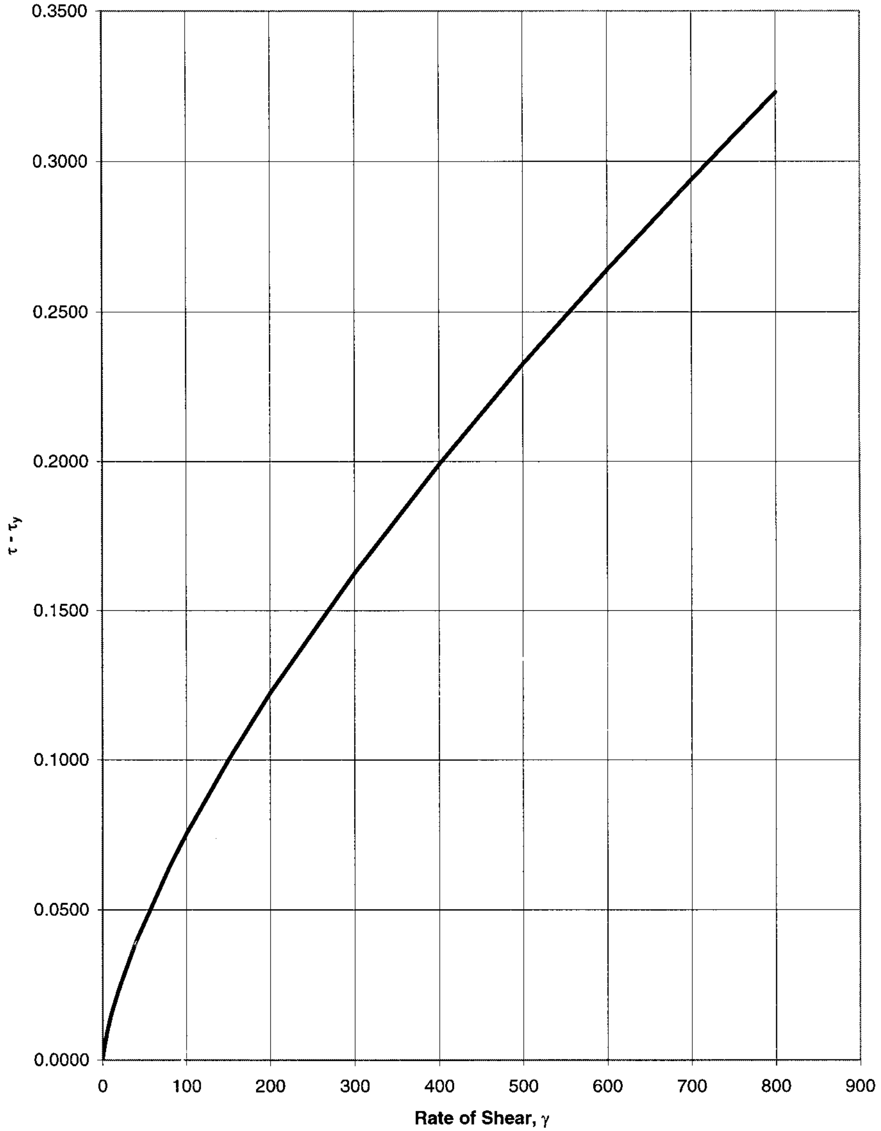

FIGURE C11.1 Plot of $\tau - \tau_y$ versus shear rate on an arithmetic scale.

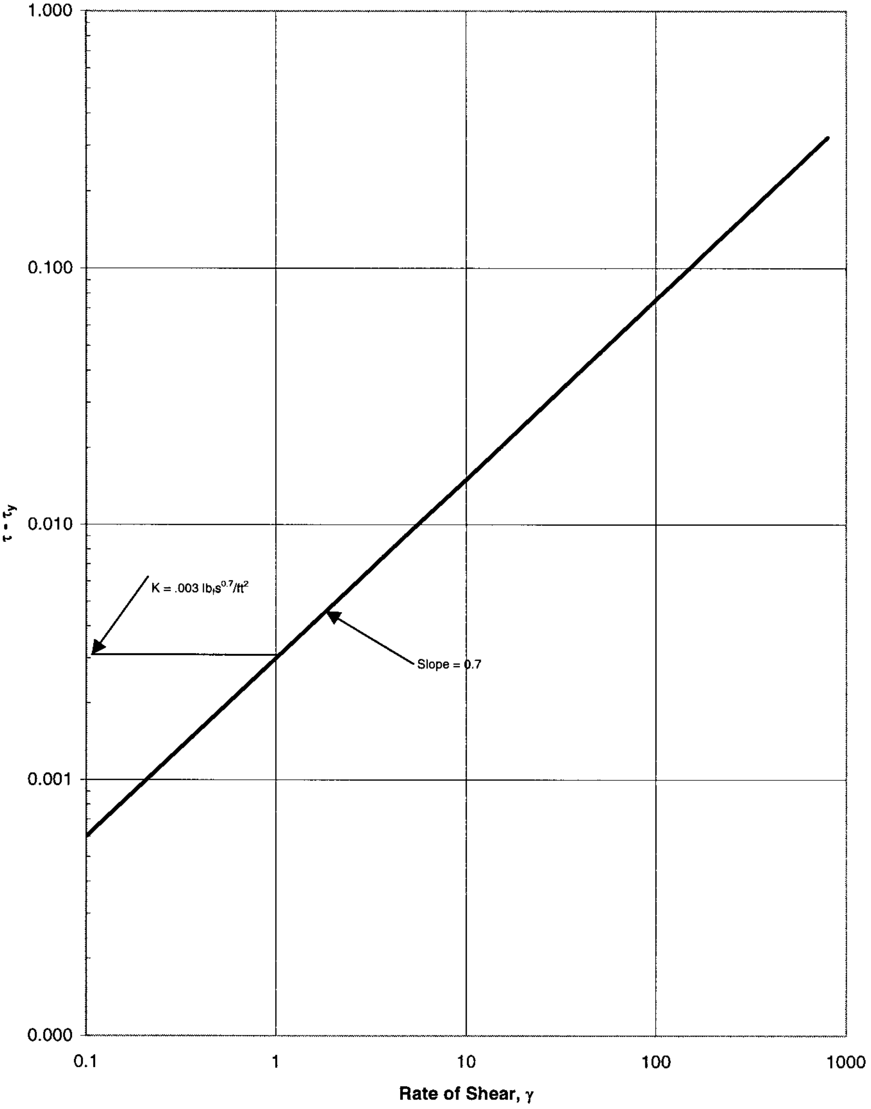

FIGURE C11.2 Plot of $\tau - \tau_y$ versus shear rate on a logarithmic scale.

where C_v is the volume fraction of solids in slurry. The viscosity of slurries exhibiting newtonian behavior can be estimated by the correlation proposed by Thomas[9]

$$\frac{\eta_m}{\eta\gamma} = 1 + 2.5C_v + 10.05C_v^2 + 0.00273e^{16.6C_v} \tag{C11.7}$$

where η_m = slurry viscosity
η_o = suspending fluid viscosity

Chong et al.[10] have proposed the following equation for concentrated suspensions of spherical particles:

$$\frac{\eta_m}{\eta_o} = 1 + 0.75\,\frac{C_v/C_{voo}}{1 - C_v/C_{voo}} \tag{C11.8}$$

where C_{voo} is the maximum packing concentration of the solids in slurry. Equation (C11.8) should be used for values of C_v greater than 0.4.

Gay et al.[11] have proposed the following correlations for estimating the Bingham plastic viscosity and yield stress, based on their experimental data:

$$\eta_m = \mu \exp\left\{\left[2.5 + \left(\frac{C_v}{C_{voo} - C_v}\right)^{0.48}\right]\frac{C_v}{C_{voo}}\right\} \tag{C11.9}$$

$$\tau_y = 200\left(\frac{d}{C_{voo} - C_v}\right)\left(\frac{C_{voo}}{1 - C_{voo}}\right)^2 \frac{1}{\zeta^{1.5}\sigma_g^2} \tag{C11.10}$$

where μ = viscosity of suspending medium, lbf·s/ft^2 (Pa·s)
η_m = Bingham plastic viscosity of slurry, lbf·s/ft^2 (Pa·s)
τ_y = yield stress of slurry, lbf/ft^2 (Pa)
d = geometric mean particle diameter, ft (m)
ξ = particle shape factor, defined as ratio of surface area of sphere of equivalent volume to surface area of particle
σ_g = geometric standard deviation of particle diameter

SLURRY HYDRAULICS

Homogeneous Flow

The friction loss for a homogeneous slurry depends upon the rheological characteristics of the slurry. The flow through a pipeline can be laminar or turbulent depending upon the velocity of flow. For a nonsettling suspension such as sewage sludge or a highly concentrated coal-water fuel slurry, laminar flow may be encountered. Turbulent flow should be maintained when the suspension exhibits a settling tendency. It is, therefore, necessary to estimate the velocity at which transition from laminar to turbulent flow occurs.

Transition Velocity

The *transition velocity* is defined as the velocity below which laminar flow is encountered. For a newtonian slurry, the transition velocity corresponds to a Reynolds number of 2000. The Reynolds number should be based on the viscosity of the slurry.

For slurries exhibiting Bingham plastic rheology, the transition velocity is governed by the Reynolds number as well as the Hedstrom number. The Reynolds number should be defined using the plastic viscosity. The critical Reynolds number corresponding to the transition velocity can be estimated from a knowledge of the

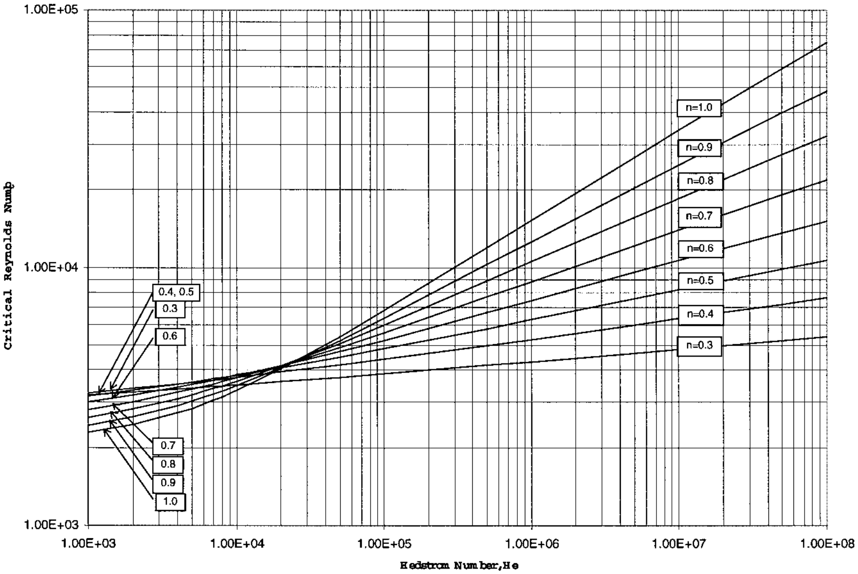

FIGURE C11.3 Laminar-turbulent transition Reynolds number $\mathrm{Re}_c = 8\rho D^n V^{2-n}[n/(2 + 6n)]^n(Kg_c)$ as a function of Hedstrom number $\mathrm{He} = [D^2\rho\tau_y(t_y/K)^{2/n-2}]/(K^2g_c)$ for Bingham plastic slurries, where D = pipe ID (ft), V = velocity (ft/s), ρ = density (lb/ft^3), K = consistency (lbf · s^n/ft^2), τ_y = yield stress (lbf · /ft^2), g_c = 32.2 lb · s/(lbf · ft^2).

physical properties of the slurry and the pipe system from Fig. C11.3, proposed by Hanks and Pratt.[12] In this figure the Reynolds number Re and the Hedstrom number He are defined as follows:

$$\mathrm{Re} = \frac{vd\rho}{\eta} \tag{C11.11}$$

$$\mathrm{He} = \frac{D^2\rho\tau_y}{\eta^2 g_c} \tag{C11.12}$$

where D = pipe inside diameter, ft (m)
V = average flow velocity, ft/s (m/s)
g_c = dimension conversion factor = 32.2 lbm·ft/(lbf·s^2) (1 for SI units)
η = Bingham plastic viscosity, lbf·s/ft^2 (Pa·s)
ρ = fluid density, lb/ft^3 (kg/m^3)
τ_y = yield stress, lbf/ft^2 (Pa)

For slurries exhibiting pseudoplastic rheology, the transition velocity is governed by the flow behavior index of the slurry. Figure C11.4 shows the variation of the transition critical Reynolds number with the flow behavior index *n*. Note that the Reynolds number for a pseudoplastic slurry is given by

$$\mathrm{Re_p} = 8\rho D^n V^{2-n}\left(\frac{n}{2+6n}\right)^n\left(\frac{1}{Kg_c}\right) \tag{C11.13}$$

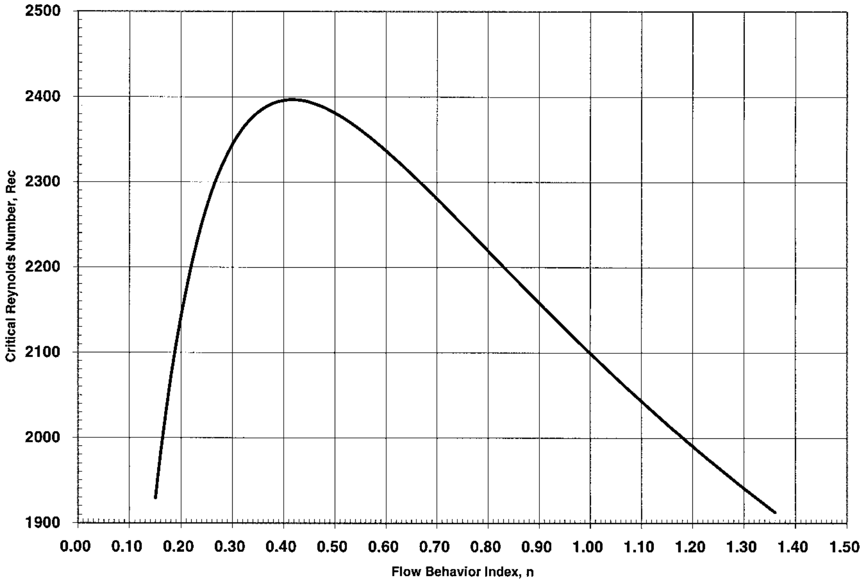

FIGURE C11.4 Laminar-turbulent transition Reynolds number (Re_c) as a function of flow behavior index, n for pseudoplastic slurries, where D = pipe ID (ft), V = velocity (ft/s), ρ = density (lb/ft^3), K = consistency (lbf·s^{n}ft^2), g_c = 32.2 lb·s/(lbf·ft^2).

where K = consistency index, lbf·s^n/ft^2 (Pa·s^n)
Re_p = Reynolds number for pseudoplastic slurry
n = flow behavior index

For a yield pseudoplastic slurry, the generalized Reynolds number corresponding to the transition critical velocity can be estimated by using the following equations, proposed by Hanks and Ricks.[13]

$$\mathrm{Re}_{cp} = \frac{6464n}{(1+3n)^n}(2+n)^{(2+n)/(1+n)} \frac{\left[\dfrac{(1-x)^2}{1+3n} + \dfrac{2x(1-x)}{1+2n} + \dfrac{x^2}{1+n}\right]^{2-\mathrm{n}}}{(1-x)^n} \tag{C11.14}$$

The value of x, which is the ratio of yield stress to wall shear stress, at the critical Reynolds number is obtained from the following equation:

$$\mathrm{He}_{yp} = \frac{3232}{n}(2+n)^{(2+n)/(1+n)} \left[\frac{x}{(1-x)^{1+n}}\right]^{(2-n)/n} \left(\frac{1}{1-x}\right)^n \tag{C11.15}$$

The Reynolds number Re_{cp} in Eq. (C11.14) is the same as that for a pseudoplastic in Eq. (C11.13). The Hedstrom number He_{yp} is defined as follows:

$$\mathrm{He}_{yp} = \frac{D^2 \rho \tau_y}{K^2 g_c} \left(\frac{\tau_y}{K}\right)^{2/n-2} \tag{C11.16}$$

For given slurry characteristics and pipe diameter, the Hedstrom number is computed by using Eq. (C11.16). This value of the Hedstrom number is used in Eq. (C11.15) to compute the value of x. This value is then used in Eq. (C11.14) to compute the critical Reynolds number. The corresponding transition velocity is calculated by using Eq. (C11.13).

Figure C11.3 also shows the variation in critical Reynolds number with Hedstrom number for the yield pseudoplastic slurries.

Example C11.5. Estimate the laminar-turbulent transition critical velocity for the slurry considered in Example C11.4 if the pipe inside diameter is 12 in and the solids specific gravity is 3.0.

Solution. Given data:

$$\text{Pipe ID, } D = 12\,\text{in}(0.3048\,\text{m})$$

$$= 1\,\text{ft}$$

$$\text{Yield stress of slurry} = 0.125\,\text{lb/ft}^2\ (6\,\text{Pa})$$

$$\text{Slurry consistency } k = 0.003\,\text{lbf}\cdot\text{s}^n/\text{ft}^2\ (0.144\,\text{Pa}\cdot\text{s}^n)$$

$$\text{Solids specific gravity} = 3.0$$

$$\text{Solids concentration } C_w = 50$$

Computed results:

$$\text{Solids density } \rho_o = 3 \times 62.4\,\text{lbm/ft}^2\ (3000\,\text{kg/m}^3)$$

$$\text{Liquid density } \rho_1 = 62.4\,\text{lbm/ft}^3 (1000\,\text{kg/m}^3)$$

Substituting in Eq. (C11.1), we get

$$\text{Slurry density } \rho_m = 93.6\,\text{lbm/ft}^3\ (1500\,\text{kg/m}^2)$$

Compute the Hedstrom number He_{yp}, using Eq. (C11.16):

$$\text{He}_{yp} = 9.9 \times 10^5$$

From Fig. C11.3 find the critical Reynolds number corresponding to $n = 0.7$ and the computed value of the Hedstrom number.

$$\text{Re}_{yp} = 8850$$

Next compute the laminar-turbulent transition velocity, using Eq. (C11.13):

$$v = 3.58\,\text{ft/s}(1.09\,\text{m/s})$$

Friction Loss in Laminar Flow. For a homogeneous flow condition, the friction loss in a pipeline is estimated by using the following equation:

$$h = 4f\left(\frac{L}{D}\right)\frac{V^2}{2_g} \tag{C11.17}$$

where D = pipe inside diameter, ft (m)
L = pipe length, ft (m)
V = velocity of flow, ft/s (m/s)
f = friction factor
h = friction loss, ft (m) of slurry head
g = acceleration due to gravity, ft/s^2 (m/s^2)

The friction factor for a newtonian slurry is given by the following:

$$f = \frac{16}{\text{Re}} \tag{C11.18}$$

$$\text{Re} = \frac{VD\rho}{\eta_m g_c} \tag{C11.19}$$

where ρ = slurry density, lbm/ft^3 (kg/m^3)
η_m = slurry viscosity lbf·s/ft^2 (Pa·s)
g_c = 32.2 lbm·ft/(lbf·s^2 (1 for SI units)

The laminar-flow friction factor for Bingham plastic slurries is given by

$$\frac{f}{16} = \frac{1}{\text{Re}} + \frac{\text{He}}{6\text{Re}^2} - \frac{\text{He}^4}{3f^3\text{Re}^8} \tag{C11.20}$$

The Reynolds number Re and the Hedstrom number He are given by Eqs. (C11.11) and (C11.12), respectively.

The laminar-flow friction factor for a pseudoplastic slurry is given by Dodge and Metzner[14] as

$$f = \frac{16}{\text{Re}_p} \tag{C11.21}$$

where Re_p is the generalized Reynolds number given by Eq. (C11.13). The laminar-flow friction factor for a slurry exhibiting yield pseudoplastic flow behavior is given by

$$f = \frac{16}{\text{Re}_p \Psi} \tag{C11.22}$$

where the Reynolds number Re_p is given by Eq. (C11.13).

$$\Psi = (1+3n)^n (1-x)^{1+n} \left[\frac{(1-x)^2}{1+3n} + \frac{2x(1-x)}{1+2n} + \frac{x^2}{1+n}\right]^n \tag{C11.23}$$

The value of the ratio x of the yield stress to wall shear stress is obtained from

$$\text{Re}_p = 2\,\text{He}_{yp}\left(\frac{n}{1+3n}\right)^2 \left(\frac{\Psi}{x}\right)^{(2-n)/n} \tag{C11.24}$$

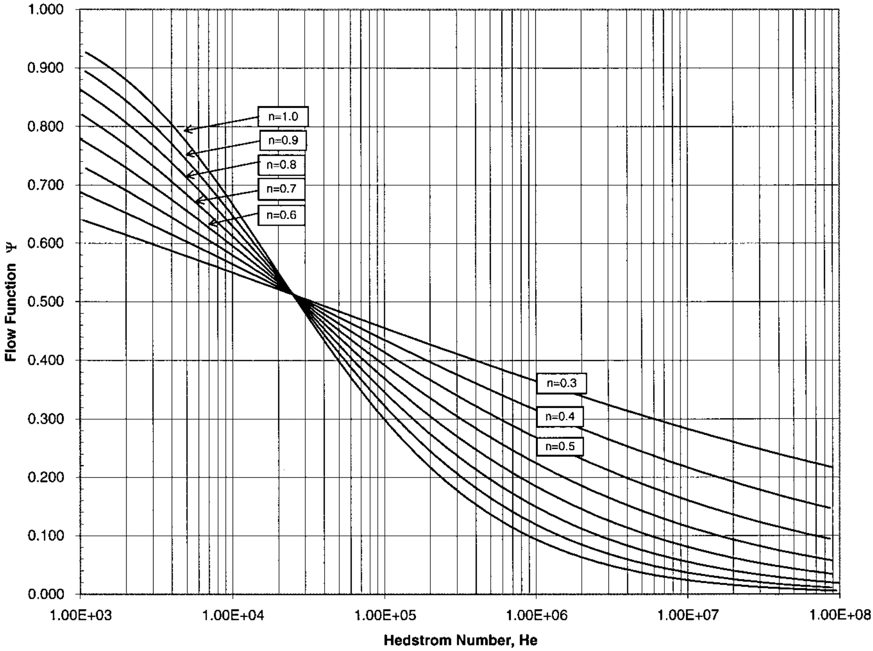

FIGURE C11.5 Laminar flow function Y as a function of Hedstrom number He = $[D^2\ \rho\tau_y(t_y/K)^{2/n-2}]/(K^2g_c)$, for yield pseudoplastic slurries, where D = pipe ID (ft), V = velocity (ft/s), ρ = density (lb/ft^3), K = consistency (lbf·s^n/ft^2), τ_y = yield stress (lbf/ft^2), g_c = 32.2 lb·s/(lbf·ft^2).

Figure C11.5 shows a plot of ψ as a function of the Hedstrom number for various values of the flow behavior index n.

Stainsby and Chilton[15] have proposed a hybrid model incorporating yield pseudoplastic behavior at low shear rates and Bingham plastic behavior at high shear rates. They claim that their model gives better correlations with pipeline friction loss data than those of other models.

Example C11.6. Estimate the friction loss in a 12-in-ID (304.8-mm-ID) pipe at a velocity of 3 ft/s (0.914 m/s) for the slurry considered in Example C11.5.

Given data:

$$\text{Pipe ID } D = 1\ \text{ft}\ (0.3048\ \text{m})$$

$$\text{Slurry density} = 93.6\ \text{lbm/ft}^3\ (1500\ \text{kg/m})^3$$

$$\text{Velocity } v = 3\ \text{ft/s}\ (0.914\ \text{m/s})$$

$$K\ (\text{from Example C11.5}) = 0.003\ \text{lbf}\cdot\text{s}^n/\text{ft}^2\ (0.144\ \text{Pa}\cdot\text{s}^n)$$

$$\tau_y\ (\text{from Example C11.5}) = 0.125\ \text{lbf/ft}^2\ (6\ \text{Pa})$$

$$n\ (\text{from Example C11.5}) = 0.7$$

$$g = 32.2\ \text{ft/s}^2\ (9.8\ \text{m/s})^2$$

$$\text{He}_{yp}\ (\text{from Example C11.5}) = 9.9\times10^5$$

Using Eq. (C11.13), find $\mathrm{Re}_p = 7023$. The Reynolds number is less than the critical Reynolds number. The flow is laminar.

From Fig. C11.5, the value of ψ is found to be 0.184. The friction factor

$$\begin{aligned} f &= \frac{16}{\Psi}\,\mathrm{Re}_{yp} \\ &= 0.0124 \end{aligned}$$

$$\begin{aligned} \text{Friction loss per unit length} &= \frac{4fv^2}{2gD} \\ &= 6.92 \times 10^{-3}\ \text{ft/ft (m/m)} \end{aligned}$$

Friction Loss in Turbulent Flow. The friction factor for newtonian liquids in a turbulent-flow regime is given by the Colebrook equation:

$$\frac{1}{\sqrt{f}} = 4\log\frac{D}{2\varepsilon} + 3.48 - 4\log\left(1 + \frac{9.35D}{2\varepsilon\mathrm{Re}\sqrt{f}}\right) \tag{C11.25}$$

where ε = the roughness of the pipe, ft (m). Figure C11.6 shows the friction factor as a function of Reynolds number with the relative roughness ε/D as a parameter.

Hanks and Dadia[16] have developed a friction factor–Reynolds number relationship for Bingham plastic liquids. This relationship was later modified by Hanks[17]

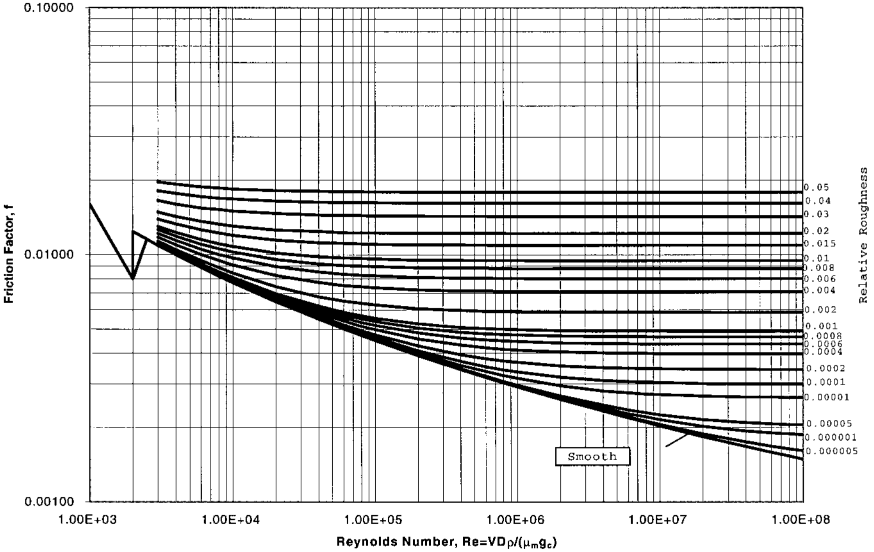

FIGURE C11.6 Friction factor f as a function of Reynolds number for newtonian slurries, where D = pipe ID (ft), V = velocity (ft/s), r = density (lb/ft^3), μ = viscosity (lbf·s/ft^2), g_c = 32.2 lb·s/(lbf·ft^2).

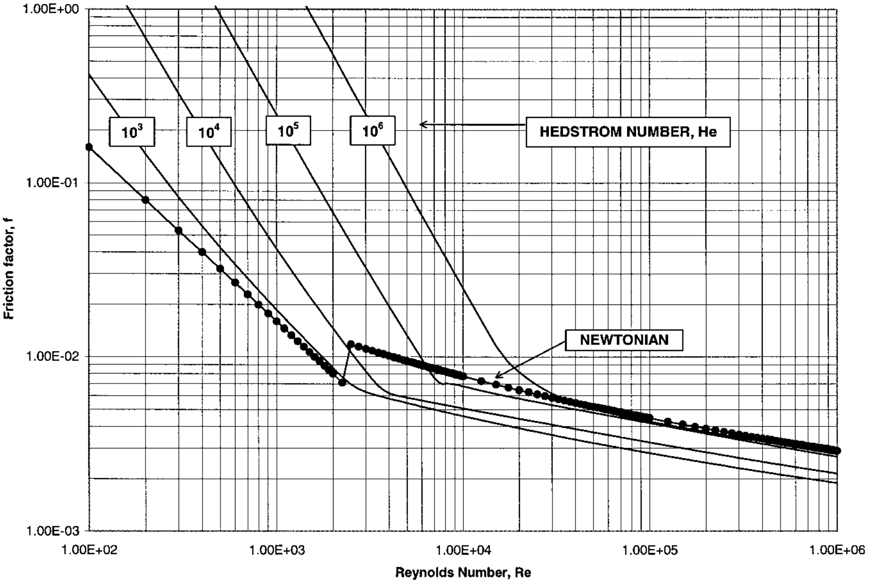

FIGURE C11.7 Friction factor f as a function of Reynolds number for Bingham plastic slurries, Re = $\rho DV/(\eta g_{cy})$, He = $D^2 \rho\tau_y/(\eta g_c)$, where D = pipe ID (ft), V = velocity (ft/s), ρ = density (lb/ft^3), η = viscosity (lbf·s/ft^2), τ_y = yield stress (lbf/ft^2), g_c = 32.2 lb·s/(lbf·ft^2).

based on further analysis of their data. Figure C11.7 shows the friction factor–Reynolds number relationship for Bingham plastics. Note that for Hedstrom numbers greater than 500,000, there is a long transition region between the laminar-turbulant transition critical Reynolds number and the Reynolds number at which the friction factor curve for Bingham plastics intersects the newtonian curve. The friction factor for Bingham plastic in this transition region is significantly greater than the newtonian friction factor.

Dodge and Metzner[18] carried out a semitheoretical analysis of the turbulent flow of pseudoplastic liquids in smooth pipe. They proposed the following equation for the friction factor in turbulant flow:

$$\frac{1}{\sqrt{f}} = \frac{4}{n^{0.75}} \log \left(\mathrm{Re}_p f^{1-n/2}\right) - \frac{0.4}{n^{1.2}} \tag{C11.26}$$

Figure C11.8 shows a plot of friction factor as a function of Reynolds number for various values of n based on Eq. (C11.26).

Hanks and Ricks[19] have used the concept of mixing length in developing a semitheoretical relationship between friction factor and Reynolds number for turbulent flow of pseudoplastics. This method was extended by Hanks[20] for estimating turbulent-flow friction factors for yield pseudoplastic fluids. Interested readers should refer to the referenced article for further details.

Figure C11.9 presents the friction factor–Reynolds number relationship with Hedstrom number as a parameter for selected values of flow behavior index n.

The following friction factor–Reynolds number relationship, developed by Tor-

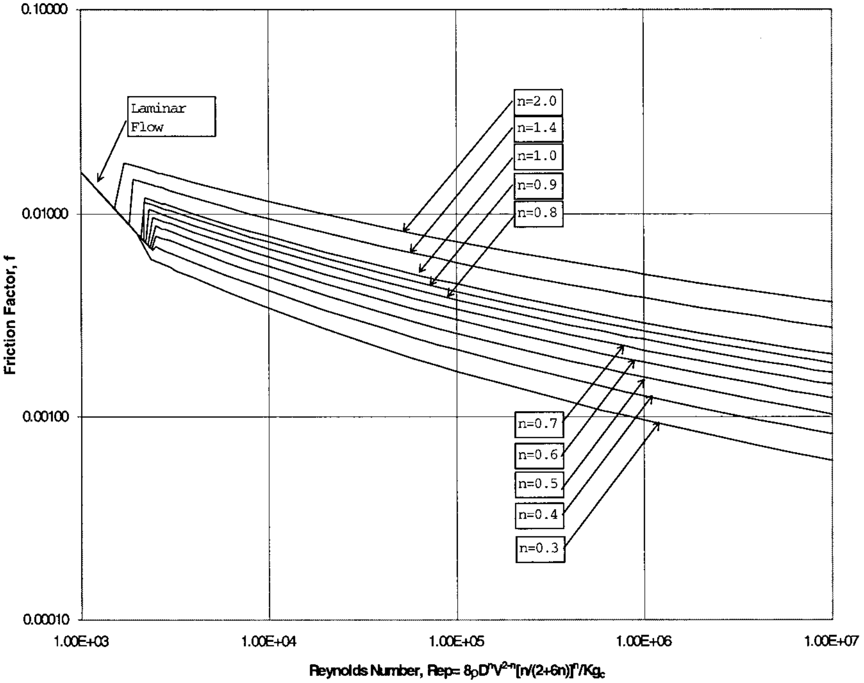

FIGURE C11.8 Friction factor f as a function of Reynolds number for pseudoplastic slurries. $\mathrm{Re}_p = 8\rho D^n V^{2-n}(n/(2+6n))^n/(Kg_c)$ where D = pipe ID (ft), V = velocity (ft/s), ρ = density (lb/ft^3), K = consistency (lbf·s^n/ft^2), g_c = 32.2 (lb·s/(lbf·ft^2).

rance,[21] is applicable to turbulent flow of newtonian, pseudoplastic, and Bingham plastic as well as yield pseudoplastic fluids in smooth pipes.

$$\frac{1}{\sqrt{f}} = \frac{2.69}{n} - 2.95 + \frac{4.53}{n}\log(1-x) - \frac{4.53}{n}\log\left(\mathrm{Re}_r\sqrt{f^{2-n}}\right) + \frac{0.68}{n} \tag{C11.27}$$

where

$$\mathrm{Re}_T = \frac{8\rho D^n V^{2-n}}{K(8^n)} \tag{C11.28}$$

Torrance has also extended his analysis to rough wall fully turbulent friction factor for nonnewtonian fluids and obtained the following relationship:

$$\frac{1}{\sqrt{f}} = 4.07\log\frac{D}{2\varepsilon} + 6.0 - \frac{2.65}{n} \tag{C11.29}$$

Wilson and Thomas[22] and Thomas and Wilson[23] have used a mixing-length approach for the yield pseudoplastic fluids. Their model includes corrections to change

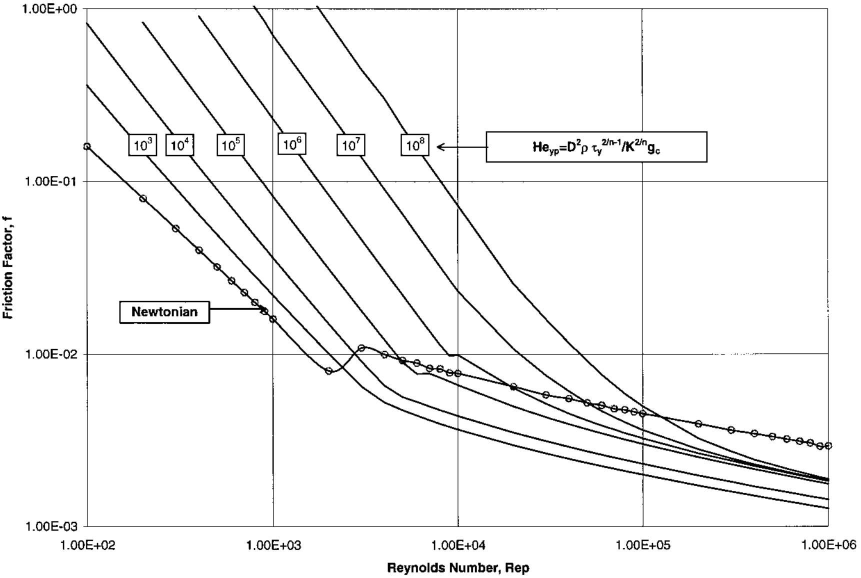

FIGURE C11.9a Friction factor f as a function of Reynolds number for yield pseudoplastic slurries for $n = 0.7$, $\mathrm{He} = [D^2\rho\tau_y(t_y/K)^{2/n-2}]/(K^2g_c)$, $\mathrm{Re} = 8\rho D^nV^{2-n}[n/(2+6n)]^n/(Kg_c)$, where D = pipe ID (ft), V = velocity (ft/s), ρ = density (lb/ft^3), K = consistency (lbf · s^n/ft^2), τ_y = yield stress (lbf/ft^2), $gc = 32.2$ lb · s/(lbf · ft^2).

the thickness of the viscous sublayer according to the rheology and a term to account for the central unsheared core. Their method has been shown to give fairly good agreement with experimental data.

Stainsby and Chilton[24] have given a turbulent-flow friction factor correlation based on their model.

Example C11.7. Estimate the friction loss in a 12-in-ID (0.3048-m-ID) pipe at a velocity of 5 ft/s (1.52 m/s) for the slurry considered in Example C11.5. Since the velocity of flow is greater than the transition velocity (see Example C11.5), the flow will be turbulent. Find the Reynolds number corresponding to the given velocity, using the slurry rheological data given in Example C11.5.

$$\mathrm{Re}_p = 13{,}644$$

The Hedstrom number from Example C11.5 is 9.9×10^5. Using Fig. C11.9*c*, find the friction factor $f = 0.008$. Substituting the values of $D, V, f,$ and g in Eq. (C11.17), find the head loss per unit length of pipe:

$$\text{Head loss} = 0.0124\,\text{ft (m) slurry/ft (m) pipe}$$

Heterogeneous Flow

Fluid turbulence is needed to maintain particles in suspension or motion in a horizontal pipe carrying setting suspension. At low velocities, particles settle and form a stationary bed on the bottom of a horizontal pipe.

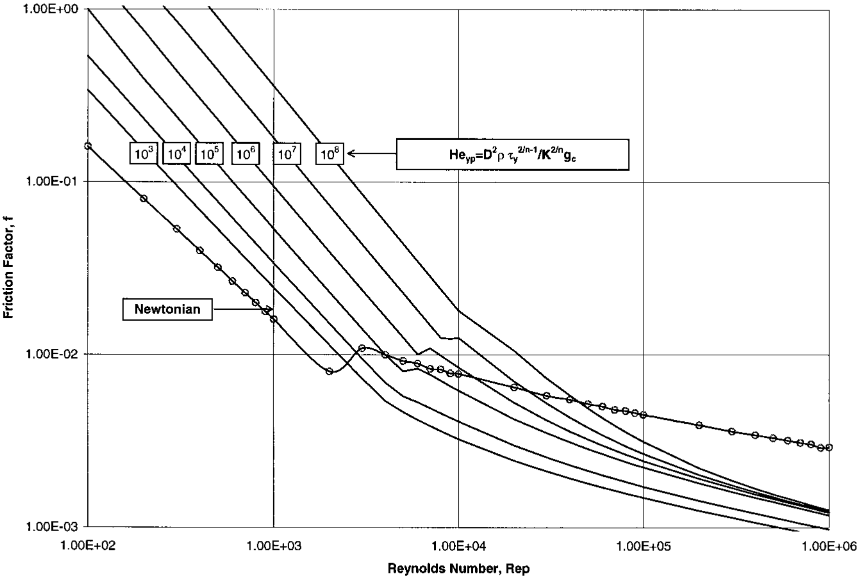

FIGURE C11.9b Friction factor f as a function of Reynolds number for yield pseudoplastic slurries for $n = 0.5$, $\mathrm{He} = [D^2\rho\tau_y(t_y/K^{2/n-2}]/(K^2g_c)$, $\mathrm{Re} = 8\rho D^nV^{2-n}[n/(2+6n)]^n/(Kg_c)$, where D = pipe ID (ft), V = velocity (ft/s), ρ = density (lb/ft^3), K = consistency (lbf · s^n/ft^2), τ_y = yield stress (lbf/ft^2), g_c = 32.2 (lb · s/(lbf · ft^2).

Deposition Velocity. The velocity below which bed deposits form is called the deposition velocity. Operating the pipeline at or below the deposition velocity for prolonged time could result in a pipeline blockage. The minimum operating velocity in a slurry pipeline should be kept greater than the deposition velocity, to prevent pipeline blockages.

A number of empirical correlations have been proposed for estimating the deposition velocity. For uniform-size particles, the Durand[25] correlation, given as follows, is widely used:

$$V_D = F_L\sqrt{2gD(s-1)} \tag{C11.30}$$

The value of F_L in Durand's correlation can be obtained from Fig. C11.10. In Eq. (C11. 30).

D = pipe ID, ft (m)

V_D = deposition velocity, ft/s (m/s)

g = acceleration due to gravity, ft/s^2 (m/s^2)

s = solids specific gravity

Zandi and Govatos,[26] Wasp et al.[27] and Graf et al.[28] have proposed minor modifications of Durand's correlation based on additional data.

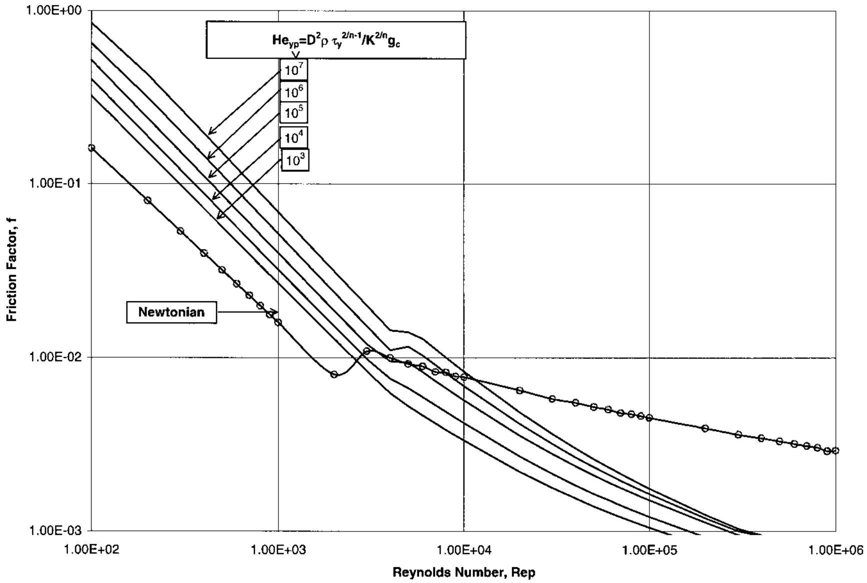

FIGURE C11.9c Friction factor f as a function of Reynolds number for yield pseudoplastic slurries for $n = 0.3$, He $= [D^2\rho\tau_y(t_y/K)^{2/n-2}]/(K^2g_c$, Re $= 8\rho D^nV^{2-n}[n/(2 + 6n)]^n/(Kg_c)$, where D = pipe ID (ft), V = velocity (ft/s), ρ = density (lb/ft^3), K = consistency (lbf · s^n/ft^2), τ_y = yield stress (lbf/ft^2), g_c = 32.2 (lb · s/(lbf · ft^2).

Most industrial applications involve nonuniform-size particles. Pilot plant test results or prior experience with similar material is generally used for estimating deposition velocity for nonuniform-size particles.

Oroskar and Turian[29] have developed a semiempirical correlation which can be used for nonuniform-size particles. Their correlation is as follows:

$$V_D = \left\{5C_V(1 - C_V)^{2m-1}\left(\frac{D}{d}\right)\left[\frac{D\sqrt{gd(s-1)}}{g_c}\right]^{1/8}\left(\frac{1}{Z}\right)\right\}^{8/15}\sqrt{gd(s-1)} \tag{C11.31}$$

where V_D = deposition velocity, ft/s (m/s)
z = function of V/V_D, as shown in Fig. C11.11
d = mean diameter of particles, ft (m)
w = settling velocity of solid particle in slurry, ft/s (m/s)
m = hindered settling velocity exponent as a function of particle Reynolds number, shown in Fig. C11.12
w_o = settling velocity of solid particle in clear water of infinite extent, ft/s (m/s)
μ = viscosity of water, lbf·s/ft^2 (Pa·s)

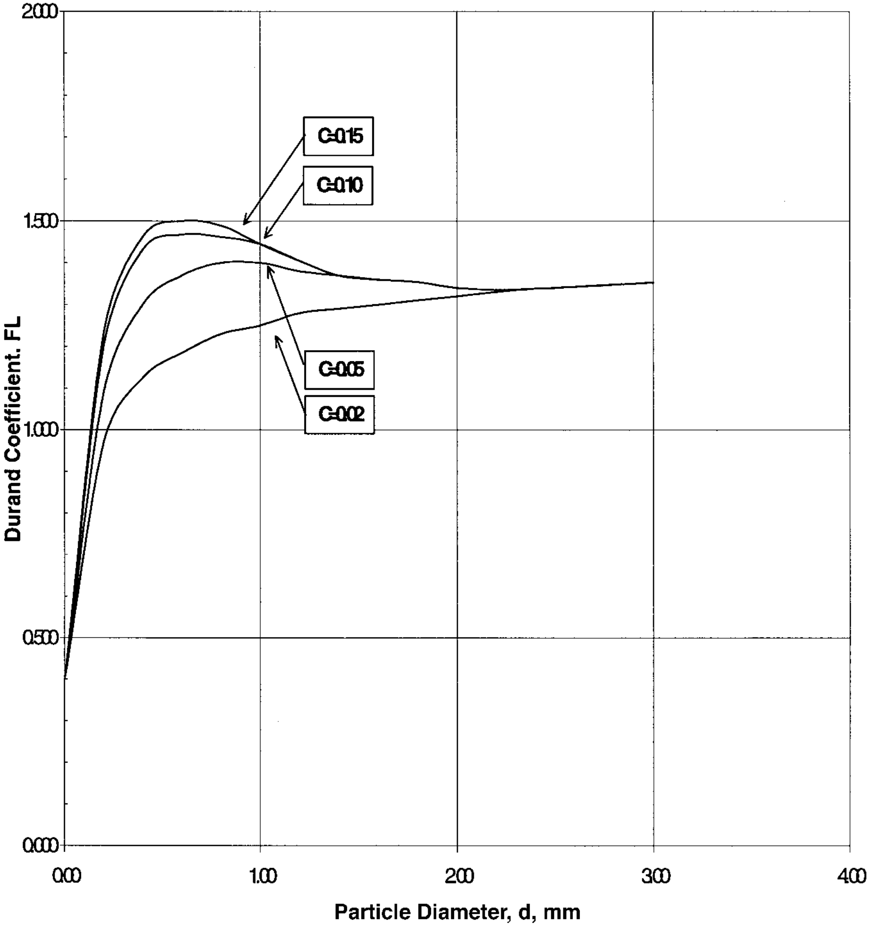

FIGURE C11.10 Durand coefficient F_L as a function of particle size where $V_D = F_L \sqrt{2gD(s-1)}$, where V_D = deposition velocity (ft/s), D = pipe ID (ft), g = 32.2 ft/s^2, s = solids specific gravity.

The settling velocity w_o of a single particle in a fluid is given as

$$w_o^2 = \frac{4gd(\rho_s - \rho_l)}{3C_D\rho_l} \tag{C11.32}$$

where C_D = drag coefficient
d = particle diameter, ft (m)
g = acceleration due to gravity, 32.2 ft/s^2 (9.81 m/s^2)
ρ_s = density of solid particle, lbm/ft^3 (kg/m^3)
ρ_l = density of liquid, lbm/ft^3 (kg/m^3)
w_o = settling velocity, ft/s (m/s)

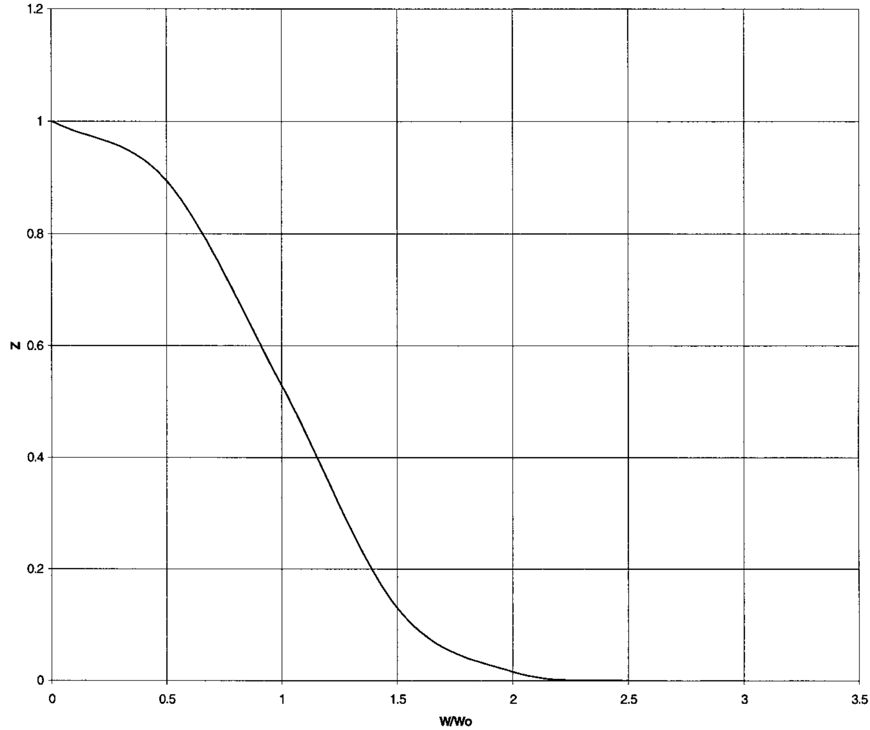

FIGURE C11.11 Function *z* as a function of w/w_o for use in Eq. (C11.31), where w = hindered settling velocity of solid particle in slurry (ft/s), and w_o = settling velocity of single particle in suspending liquid (ft/s).

The drag coefficient of spherical particles depends upon the particle Reynolds number Re_w.

For $\mathrm{Re}_w < 0.1$, the drag coefficient, C_D is given by

$$C_D = 24/\mathrm{Re}_w \tag{C11.33}$$

where

$$\mathrm{Re}_W = \frac{d\rho_l w_o}{\mu g_c} \tag{C11.34}$$

and μ = viscosity of liquid, lbf·s/ft^2 (Pa·s). The value of C_D equals 0.4 for a particle Reynolds number greater than 1000. Figure C11.13 shows variation in the drag coefficient with particle Reynolds number for spherical particles.

Use of $C_D\ \mathrm{Re}_w^2$ instead of C_D enables determination of the particle Reynolds number from a plot of $C_D\ \mathrm{Re}_w^2$ versus Re_w, shown in Fig. C11.13.

$$C_D \mathrm{Re}_w^2 = \frac{4gd^3(\rho_s - \rho_l)}{3\mu^2 g_c^2} \tag{C11.35}$$

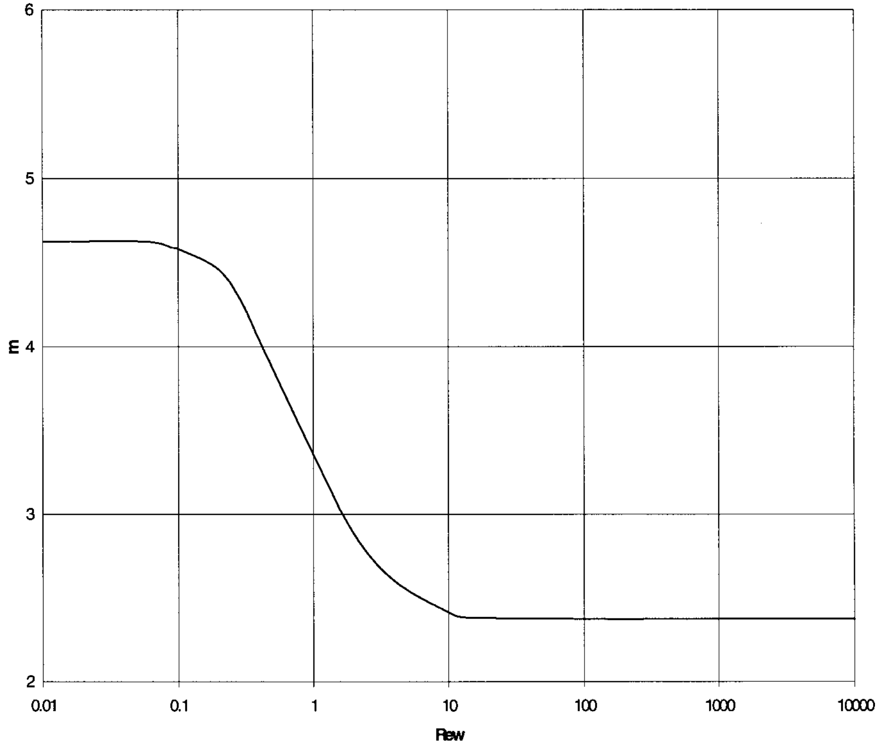

FIGURE C11.12 Hindered settling velocity exponent m as a function of particle Reynolds number $\mathrm{Re}_w = d\rho_l w_o/(\mu g_c)$, where d = particle diameter (ft), w_o = particle settling velocity (ft/s), ρ_l = liquid density (lb/ft^3), μ = viscosity of fluid (lb·s/ft), g_c = 32.2 lb·s/(lbf·ft).

The drag coefficient is larger for a nonspherical particle than for a spherical particle of the same diameter. Experimental data on settling velocity as a function of particle diameter may be used to establish the relationship between C_D and Re_w.

The settling velocity of a solid particle in slurry (hindered settling velocity) is given by

$$w = w_O(1 - C_v)^m \tag{C11.36}$$

where the exponent m varies with the particle Reynolds number, as shown in Fig. C11.12.

Wilson[30,31] has developed a semitheoretical analysis for heterogeneous slurries. He has presented nomographs for estimating the deposition velocity for particles larger than 0.15 mm in diameter.

Example C11.8. Estimate the deposition velocity for a sand-water slurry in a 12-in (0.3048-m) ID pipeline. The sand particle diameter is 0.2 mm, and its specific gravity is 2.65. The slurry concentration is 31.9 percent solids.

Solution. Using Eq. (C11.1), we find the slurry density, ρ_m = 77.9 1b/ft^3 (1248 kg/m^3). Using Eq. (C11.6), we find the volume fraction of solids C_v = 0.15. From

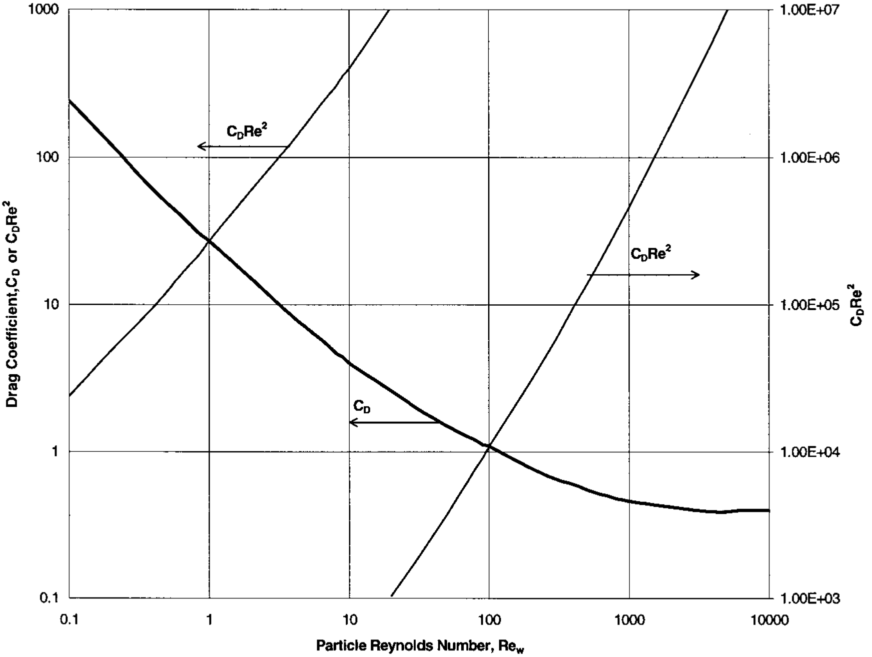

FIGURE C11.13 Drag coefficient C_D of spherical particles settling in liquid. $C_D = 4gd(\rho_s - \rho_l)/[3W_o^2\rho_l]$, where d = particle diameter (ft), w_o = settling velocity (ft/s), g = acceleration due to gravity (32.2 ft/s^2), ρ_s = particle density (lb/ft^3), ρ_l = liquid density (lb/ft^3).

Fig. C11.10, we find the value of F_L equal to 1.3 based on a particle diameter equal to 0.2 mm and C_v equal to 0.15. In Eq. (C11.30) we substitute the following values to compute the deposition velocity V_D:

$$F_L = 1.3 \qquad D = 1\,\text{ft}\,(0.3048\,\text{m}) \qquad g = 32.2\,\text{ft/s}^2\,(9.8\,\text{m/s}^2) \qquad S = 2.65$$

$$V_D = 13.4\,\text{ft/s}\,(4.08\,\text{m/s})$$

Example C11.9. Estimate the deposition velocity for a coal-water slurry having a mean particle diameter equal to 0.01 in (0.0254 mm) in a 12-in (0.3038-m) pipe. The volume fraction of coal in the slurry is 0.4, and the specific gravity of coal is 1.4. The viscosity of water is 2.1 × 10^{-5} lbf·s/ft^2 (1.0 m·Pa·s).

We are given

$$d = 0.01\,\text{in}\,(0.254\,\text{mm})$$

$$= 8.33 \times 10^{-4}\,\text{ft}\,(2.54 \times 10^{-4}\,\text{m})$$

$$\rho = 62.4\,\text{lb/ft}^3\,(1000\,\text{kg/m}^3)$$

$$\rho_s = 87.36\,\text{lb/ft}^3\,(1400\,\text{kg/m}^3)$$

$$\mu = 2.1 \times 10^{-5}\,\text{lbf}\cdot\text{s/ft}^2\,(0.001\,\text{Pa})$$

$$g_c = 32.2\,\text{lbm}\cdot\text{ft/(lbf}\cdot\text{s}^2)\,(1\text{ in SI units})$$

Thus

$$C_D \mathrm{Re}_w^2 = 84.5$$

From Fig. C11.13, $\mathrm{Re}_w = 2.7$. Using Eq. (C11.32), we find w_o equal to 0.035 ft/s (0.0107 m/s). Next we find the hindered settling velocity exponent m from Fig. C11.12: $m = 2.8$.

Now we compute the hindered settling velocity, using Eq. (C11.36):

$$w = 0.0084 \text{ ft/s } (0.0026 \text{ m/s})$$

The ratio $w/w_o = 0.24$. From Fig. C11.11, we find z equal to 0.98. Next we compute the deposition velocity, using Eq. (C11.31).

$$V_D = 3.5 \text{ ft/s } (1.07 \text{ m/s})$$

Friction Loss for Heterogeneous Flow-Horizontal Pipes. The formula proposed by Durand,[32] Eq. (C11.37), is widely used for graded solids. The formula is based on sand-and-gravel slurries with particle sizes ranging from 0.2 to 25 mm, pipe diameters from 38 to 580 mm, and solids concentrations up to 60 percent by volume.

$$\frac{i - i_w}{C_v i_w} = 81 \left[\frac{V^2 \sqrt{C_D}}{(s-1)gD} \right]^{-1.5} \qquad \text{(C11.37)}$$

where i = friction loss for slurry, ft (m) water per ft (m)
i_w = friction loss for water, ft (m) water per ft (m) at same velocity
C_D = drag coefficient of suspended solid particle settling in fluid of infinite extent
S = specific gravity of solid particles

Zandi and Govatos[33] concluded from an examination of 2549 data points that Durand's formula predicted the observed head losses fairly well once the saltation data were separated from the heterogeneous flow data. Turian and Yuan[34] have divided the available data into heterogeneous flow, saltation flow, and flow with stationary bed and have developed correlations applicable to each individual type of flow. Their correlations fit the available data better than Durand's correlation.

In Eq. (C11.37), the difference $i - i_w$ represents an increase in pressure drop due to the presence of solids in the slurry. The effect of particle size on slurry pressure drop is accounted for by the inclusion of the drag coefficient C_D.

In most industrial applications, the particle size is not uniform. A mean value of C_D is developed in Eq. (C11.37) to account for actual size variations. Equation (C11.37) can be written as follows:

$$\frac{i - i_w}{i_w} = 81 \left[\frac{V^2}{(s-1)gD} \right]^{-1.5} C_v C_D^{-0.75} \qquad \text{(C11.38)}$$

$$\frac{i - i_w}{i_w} = 81 \left[\frac{V^2}{(s-1)gD} \right]^{-1.5} \sum_{i=1}^{N} C_{vi} C_{Di}^{-0.75} \qquad \text{(C11.39)}$$

where C_{vi} = volume fraction of solids having size d_i
d_I = particle size of ith fraction
C_{Di} = drag coefficient of particle having size d_i
N = total number of size fractions into which given particle size distribution is divided

TABLE C11.2 Tyler Screen Sizes

Sieve designation		Sieve opening		Nominal wire diameter		Tyler equivalent designation
Standard	Alternate	mm	in (approx.)	mm	in (approx.)	
107.6 mm	4.24 in	107.6	4.24	6.40	0.2520	
101.6 mm	4 in	101.6	4.00	6.30	0.2480	
90.5 mm	3.5 in	90.5	3.50	6.08	0.2394	
76.1 mm	3 in	76.1	3.00	5.80	0.2283	
64.0 mm	2.5 in	64.0	2.50	5.50	0.2165	
53.8 mm	2.12 in	53.8	2.12	5.15	0.2028	
50.8 mm	2.00 in	50.8	2.00	5.05	0.1988	
45.3 mm	1¾ in	45.3	1.75	4.85	0.1909	
38.1 mm	1½ in	38.1	1.50	4.59	0.1807	
32.0 mm	1¼ in	32.0	1.25	4.23	0.1665	
26.9 mm	1.06 in	26.9	1.06	3.90	0.1535	1.050 in
25.4 mm	1.00 in	25.4	1.00	3.80	0.1496	
22.6 mm	⅞ in	22.6	0.875	3.50	0.1378	0.883 in
19.0 mm	¾ in	19.0	0.750	3.30	0.1299	0.742 in
16.0 mm	⅝ in	16.0	0.625	3.00	0.1181	0.624 in
13.5 mm	0.530 in	13.5	0.530	2.75	0.1083	0.525 in
12.7 mm	½ in	12.7	0.500	2.67	0.1051	
11.2 mm	⁷⁄₁₆ in	11.2	0.438	2.45	0.0965	0.441 in
9.51 mm	⅜ in	9.51	0.375	2.27	0.0894	0.371 in
8.00 mm	⁵⁄₁₆ in	8.00	0.312	2.07	0.0815	2½ mesh
6.73 mm	0.265 in	6.73	0.265	1.87	0.0736	3
6.35 mm	¼ in	6.35	0.250	1.82	0.0717	3½
5.66 mm	No. 3½ in	5.66	0.223	1.68	0.0661	4
4.76 mm	No. 4	4.76	0.187	1.54	0.0606	5
4.00 mm	No. 5	4.00	0.157	1.37	0.0539	6
3.36 mm	No. 6	3.36	0.132	1.23	0.0484	7
2.83 mm	No. 7	2.83	0.111	1.10	0.0430	8
2.38 mm	No. 8	2.38	0.0937	1.00	0.0394	9
2.00 mm	No. 10	2.00	0.0787	0.900	0.0354	10
1.68 mm	No. 12	1.68	0.0661	0.810	0.0319	12
1.41 mm	No. 14	1.41	0.0555	0.725	0.0285	14
1.19 mm	No. 16	1.19	0.0469	0.650	0.0256	16
1.00 mm	No. 18	1.00	0.0394	0.580	0.0228	20
841 μm	No. 20	0.841	0.0331	0.510	0.0201	24
707 μm	No. 25	0.707	0.0278	0.450	0.0177	28
595 μm	No. 30	0.595	0.0234	0.390	0.0154	32
500 μm	No. 25	0.500	0.0197	0.340	0.0134	35
420 μm	No. 40	0.420	0.0165	0.290	0.0114	42
354 μm	No. 45	0.354	0.0139	0.247	0.0097	48
297 μm	No. 50	0.297	0.0117	0.215	0.0085	60

TABLE C11.2 Tyler Screen Sizes (*Continued*)

Sieve designation		Sieve opening		Nominal wire diameter		Tyler equivalent designation
Standard	Alternate	mm	in (approx.)	mm	in (approx.)	
250 μm	No. 60	0.250	0.0098	0.180	0.0071	65
210 μm	No. 70	0.210	0.0083	0.152	0.0060	80
177 μm	No. 80	0.177	0.0070	0.131	0.0052	100
149 μm	No. 100	0.149	0.0059	0.110	0.0043	115
125 μm	No. 120	0.125	0.0049	0.091	0.0036	150
105 μm	No. 140	0.105	0.0041	0.076	0.0030	170
88 μm	No. 170	0.088	0.0035	0.064	0.0025	200
74 μm	No. 200	0.074	0.0029	0.053	0.0021	250
63 μm	No. 230	0.063	0.0025	0.044	0.0017	270
53 μm	No. 270	0.053	0.0021	0.037	0.0015	325
44 μm	No. 325	0.044	0.0017	0.030	0.0012	400
37 μm	No. 400	0.037	0.0015	0.025	0.0010	

Note that the particle size distribution is determined by screen analysis. Tyler mesh screens are widely used. The diameter of openings for Tyler screens is given in Table C11.2.

Example C11.10. Estimate the friction loss for a coal-water slurry in a 12-in-ID (0.3048-m-ID) pipe at a velocity of 8 ft/s (2.44 m/s) based on the following data:

Coal specific gravity	1.4
Volume fraction of coal in slurry	0.2
Pipe roughness	0.002 in (0.05 mm)
Viscosity of water	2.1×10^{-5} lbf·s/ft^2 (1 m·Pa·s)

The particle size distribution is as follows:

Diameter, in (mm)	Weight %
0.24 (6.1)	10
0.12 (3.05)	40
0.06 (1.52)	40
0.03 (0.76)	10

Solution. Find the drag coefficient of particles of individual size fraction.

Particle diameter $_{di}$, ft (m)	$C_D \mathrm{Re}_{w^2}\, i$	Re i	C_{Di}
0.02 (0.0061)	1.17×10^6	1710	0.4
0.01 (0.00305)	1.46×10^5	520	0.54
0.005 (0.00152)	1.83×10^4	145	0.87
0.0025 (0.00076)	2.29×10^3	36	1.76

Now,

$$\Sigma C_{vi} C_{Di}^{-0.75} = 0.269$$

Next we find the friction loss i_w for water. The Reynolds number for water is 2.38×10^7. And relative roughness of pipe = 0.0002/12 = 0.000167. From Fig. C11.6, $f = 0.00325$. Next we find

$$i_w = 4f \frac{V'^2}{2gD}$$
$$= 0.0129 \text{ ft/ft}$$

Using Eq. (C11.39), we get

$$\frac{i - i_w}{i_w} = 1.97$$

Thus,

$$\text{Friction loss for slurry } i = (1 + 1.97)i_w$$
$$= 0.0383 \text{ ft water/ft}$$

Friction Loss for Saltation Flow-Horizontal Pipes. At low velocities or with particles having large settling velocities, flow with a moving bed or saltating particles may arise.

The saltation flow regime is encountered when N_I is less than 40.

$$N_I = \frac{V^2\sqrt{C_D}}{C_v g D(s - 1)} \tag{C11.40}$$

Newitt et al.[35] have developed the following formula based on their experiments:

$$\frac{i - i_w}{i_w C_v} = 66(s - 1)\frac{gD}{V^2} \tag{C11.41}$$

Babcock[36] has proposed the following formula based on his tests:

$$\frac{i - i_w}{i_w C_v} = 60.6(s - 1)\frac{gD}{V^2} \tag{C11.42}$$

Friction Loss for Intermediate Regime. Most of the formulas for heterogeneous flow and saltation regime are applicable to uniform particles. For a mixture of two or more size fractions, it is necessary to determine an average particle diameter for use in various formulas. Use of a weighted-average diameter or drag coefficient was illustrated in the previous section.

For slurries containing finely ground particles, a better approach is to divide solid particles into a fraction that is carried in homogeneous flow and a fraction that is carried in heterogeneous or saltation regimes. The friction losses for each fraction are computed separately, using appropriate formulas, and then added to obtain the total slurry friction loss. This approach also allows the use of nonnewtonian flow properties of the slurry in computing homogeneous friction loss. Wasp et al.[37] have successfully used this approach for correlating coal slurry data.

The method of Wasp et al.[38] is an iterative procedure which works as follows:

1. Divide the total size fraction into a heterogeneous part and a homogeneous part, using the following formula:

$$\log \frac{C}{C_A} = -1.8 \left(\frac{w}{\beta \kappa u^*} \right) \tag{C11.43}$$

where C = volume fraction of solids at $0.98D$ from bottom
C_A = volume fraction of solids at pipe axis
$u^* = \sqrt{\tau_w g_c / \rho}$ = friction velocity, ft/s (m/s)
w = settling velocity of particles, ft/s (m/s)
β = ratio of mass-transfer coefficient to momentum-transfer coefficient (about 1)
κ = Von Karman constant = 0.4

It is assumed that for each size fraction, the fraction C/C_A is homogeneously distributed and that the remainder is heterogeneously distributed. At the start of the iteration, the slurry may be assumed to be homogeneous to compute the initial value of the wall shear stress.

2. Compute the friction losses for the homogeneous part, using the rheological properties of the slurry. Compute the friction loss for the heterogeneous part, using Durand's formula [Eq. (C11.38)]. The sum of the two parts gives an initial estimate of the slurry friction losses.

3. Determine the C/C_A values of each size fraction based on the value of friction loss estimated in step 2.

4. Based on these new values of C/C_A, determine the fraction of solids in the homogeneous phase and in the heterogeneous phase.

5. Recompute the friction loss for slurry as in step 2. This provides a new estimate of slurry friction losses. The iteration is continued until the new estimate closely agrees with the previous estimate. The computational procedure is suitable for analysis using a digital computer.

Lazarus[39] has described a method of estimating friction loss as well as determining whether a sliding or stationary bed of solids exists for slurries containing a mixture of coarse and fine particles.

Wilson and coworkers[40] have developed a mechanistic approach for estimating deposition velocity and friction losses for mixtures of fine and coarse slurries. Gillis et al.[41] have described a method of estimating friction losses for such slurries based on Wilson's mechanistic approach.

Friction Loss in Vertical Pipes. In vertical pipe flow, there is an absence of a concentration gradient. The slurry flow may be treated as homogeneous flow. For coarse particles, the friction loss for slurry has been found to be the same as that for water at the same velocity. With fine particles, the viscosity of the slurry should be considered in computing the friction losses. The friction factor for slurry is estimated using the equations presented earlier.

Friction Losses in Inclined Pipes. Worster and Denny[42] have proposed the following equation relating the friction loss for inclined pipes with that for horizontal pipe for heterogeneous slurries:

$$i_\theta = i_w + (i - i_w)\cos\theta \tag{C11.44}$$

where i_θ = friction loss in inclined pipe
θ = angle of inclination of pipe from horizontal

This equation suggests that the friction losses in an inclined pipe are the same with both up- and downflow and that they are smaller than those in a horizontal pipe.

Experimental evidence presented by Kao and Hwang[43] shows that the friction losses in an inclined pipe with upflow first increase and then decrease after the angle reaches a certain magnitude. In the case of downflow, the friction losses are less than those for horizontal pipe flow.

Friction Losses in Pipe Fittings. Turian et al.[44] have shown that the friction loss in fittings can be approximated by using the relations for single-phase newtonian fluid provided that the density of the liquid is set equal to that of the slurry.

DESIGN FEATURES

System Components

Figure C11.14 shows a sketch of a slurry pipeline system. It includes a slurry preparation plant, pipeline, pump stations, and slurry receiving terminal.

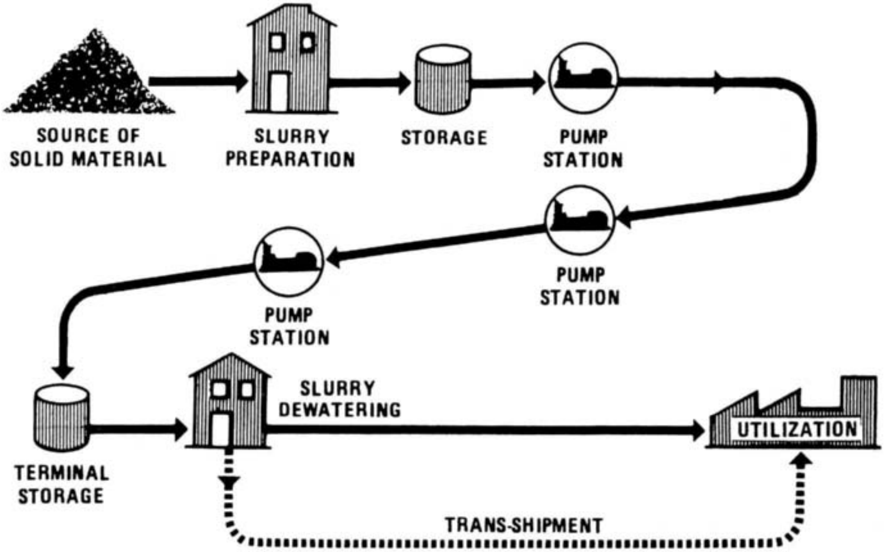
SOURCE OF SOLID MATERIAL
SLURRY PREPARATION
STORAGE
PUMP STATION
PUMP STATION
PUMP STATION
TERMINAL STORAGE
SLURRY DEWATERING
UTILIZATION
TRANS-SHIPMENT

FIGURE C11.14 Sketch of a slurry pipeline system.

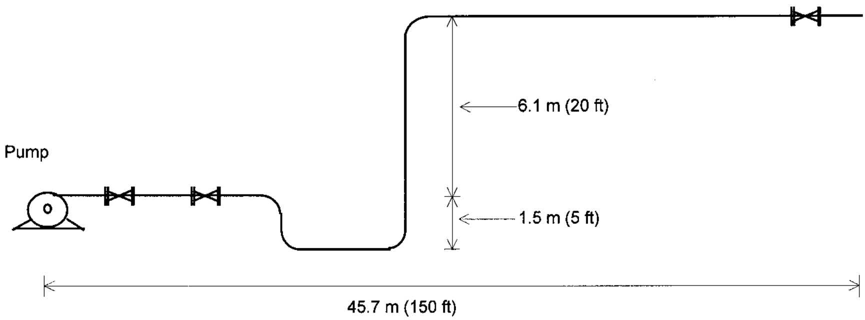

FIGURE C11.15 Sketch of pumping system for Example C11.10.

Slurry handling operations in a preparation plant may involve pipelining of slurry from one processing unit to another. Example C11.11 illustrates the design of such a piping system.

Example C11.11. Determine the pipe size and pumping requirements for the slurry piping system schematically shown in Fig. C11.15. The design basis for the system is as follows:

Maximum flow rate	2000 gpm (455 m^3/h)
Minimum flow rate	1000 gpm (227.5 m^3/h)
Slurry concentration, wt%	50
Specific gravity of solids	3.0
Slurry specific gravity	1.5

Estimated deposition velocity in 12-in (0.3048-m) pipe is 4.0 ft/s (1.22 m/s). The average value of C_D for use in Eq. (C11.37) is 50. Viscosity of water = 1 m·Pa·s (2×10^{-5} lbf·s/ft^2). Use steel pipe with a roughness of 4.57×10^{-5} m (0.00015 ft).

Solution. Assuming that the deposition velocity varies as the square root of the pipe inside diameter [refer to Eq. (C11.30)], estimate the pipe diameter that will give a velocity greater than the deposition velocity at the minimum flow rate of 1000 gpm (227.5 m^3/h).

$$\text{Minimum flow} = 1000\ \text{gpm}\ (227.5\ \text{m}^3/\text{h})$$
$$= 2.23\ \text{ft}^3/\text{s}\ (0.063\ \text{m}^3/\text{s})$$

Let D = pipe ID, ft (m)

$$\text{Deposition velocity} = 4D^{1/2}\ \text{ft/s}$$

Let the velocity at the minimum flow rate be 1 ft/s (0.3 m/s) above the estimated deposition velocity.

Thus,

$$\frac{2.23}{(\pi/4)D^2} = 4\sqrt{D} + 1$$
$$D = 0.79\,\text{ft}\ (0.241\,\text{m})$$

Try 10.75-in (273-mm) outside-diameter pipe with 0.25-in (6.4-mm) wall thickness and 0.375-in (9.5-mm) thick rubber lining.

$$\begin{aligned} \text{Pipe ID} &= 10.75 - 2(0.25 + 0.375) \\ &= 9.5\,\text{in} \\ &= 0.79\,\text{ft}\ (0.241\,\text{m}) \end{aligned}$$

The computations of friction loss and pumping head requirement are summarized in Table C11.3.

Pipe Wall Thickness

The pipe wall thickness must be sufficient to withstand the expected maximum pressure in the pipe and expected corrosion-erosion effects on the pipe wall during the intended operating lifetime. Most pipelines are designed to have a service life of at least 10 years. An example based on the ASME B31.11 Code, with enhancements based on typical service conditions, follows:

The pipe wall thickness is computed by using the following equation:

$$t = \frac{pD}{2S} + c \tag{C11.45}$$

where t = pipe wall thickness, in (mm)
p = maximum design pressure in pipe, psi (Pa)
S = maximum allowable design stress, psi (Pa)
c = allowance for corrosion-erosion, inch (mm)

The maximum allowable pipe stress is given as follows, per ASME B31.11:

$$S = 0.8E \times \text{ specified minimum yield strength of pipe}$$

where E = weld joint factor, as summarized in Table C11.4.

Example C11.12. Determine the wall thickness required at point A in the pipeline shown in Fig. C11.16. A 12-in (324-mm) steel pipe is used. The pipe is manufactured in accordance with API 5LX. The minimum yield strength of the pipe is 52,000 psi (358.5 MPa). The design hydraulic gradient is shown in Fig. C11.16. The design head at point A is 800 ft (244 m). The slurry specific gravity is 1.5. The metal loss due to corrosion-erosion is estimated to be 4 mils/yr (0.1 mm/yr), and the design life of the pipeline is 25 yr.

Solution. Maximum design pressure at A

$$\text{Maximum design pressure at } A = 800\,\text{ft slurry}$$

$$= \frac{800 \times 1.5}{2.31\,\text{psi}}$$

$$= 520\,\text{psi}\ (3589\,\text{kPa})$$

$$\text{Maximum allowable stress} = 0.8 \times \text{minimum yield strength of pipe steel}$$

$$= 0.8 \times 52{,}000\,\text{psi}$$

$$= 4160\,\text{psi}\ (286.8\,\text{MPa})$$

$$\text{Corrosion allowance } C = 0.004 \times 25\,\text{in}$$

$$= 0.1\,\text{in}\ (2.5\,\text{mm})$$

$$\text{Wall thickness } t = \frac{pD}{2S} + c$$

$$= \frac{4160(2.75)}{2(4160)} + 0.1$$

$$= 0.18\,\text{in}\ (4.53\,\text{mm})$$

The next-higher commercially available pipe wall thickness is 0.188 in (4.78 mm).

Corrosion-Erosion Control

In a slurry pipeline, metal loss is expected to be a result of corrosion with possible erosion of the corrosion products taking place simultaneously. Under some conditions, mechanical abrasion will play a part in producing the metal loss.

Erosive wear (abrasive) is governed by the size, shape, and angularity of the solids, slurry concentration, and velocity of flow. In a slurry pipeline, these parameters are interdependent to some extent. For example, use of large solids requires an increase in minimum transportation velocity. It has been found that above some critical velocity, the abrasive wear increases as the cube of slurry velocity. Wear also increases as the size of the solid particles increases. Thus, by reducing the size of the solids, the abrasive wear can be substantially reduced due to the combination of lower required velocity and reduction in wear due to smaller particle size. The effect of slurry concentration on the abrasive wear is more complicated.

From experience, it has been found that the metal loss due to abrasion is insignificant if the velocity of flow is less than about 10 ft/s (3 m/s). For long-distance slurry pipelines, velocities in the range of 4 to 6 ft/s (1.2 to 1.8 m/s) result in an optimum design from the standpoint of economics. Thus, when possible, a particle size should be selected so that the slurry is nearly homogeneously suspended at velocities of 4 to 6 ft/s (1.2 to 1.8 m/s).

Corrosion can be controlled by passivating either the anodic or the cathodic reaction at the pipe wall. Elimination of dissolved oxygen and the adjustment of slurry pH can reduce the corrosion rate substantially.[45] In most long-distance slurry

TABLE C11.3 Summary of Hydraulic Computations

	Min. flow	Max. flow	Min. flow	Max. flow	
Item	Metric	Metric	U.S. Units	U.S. Units	Remarks
1. Flow rate, ft^3/s (m^3/s)	0.095	0.126	3.34	4.45	Given
2. Velocity, ft/s (m/s)	2.1	2.8	6.8	9.1	Flow/area
3. Solids specific gravity	3.00	3.00	3.00	3.00	Given
4. Volume fraction of solids Cv	0.25	0.25	0.25	0.25	Use Eq. (C11.6)
5. $V^2/[2gD(s - 1)CD1/2]$	6.45	11.46	6.45	11.46	
6. $(i - iw)/iw$	1.24	0.52	1.24	0.52	Use Eq. (C11.37)
7. Viscosity of water, lbf.s/ft^2 (Pa·s)	9.58E-04	9.58E-04	2.00E-05	2.00E-05	Given
8. Density of water, lb/ft^3 (kg/m^3)	1000	1000	62.4	62.4	Given
9. Reynolds no. for water	5.22E + 05	6.95E + 05	5.22E + 05	6.95E + 05	
10. Relative roughness of pipe	0.00019	0.00019	0.00019	0.00019	Roughness/pipe ID
11. Friction factor for water	0.00384	0.00375	0.00384	0.00375	From Fig. C11.6
12. Friction loss for water, ft/ft (m/m)	0.0140	0.0243	0.0140	0.0243	Use Eq. (C11.17)

TABLE C11.3 Summary of Hydraulic Computations *(Continued)*

13. Friction loss for slurry:					
(*a*) Horizontal pipe: ft(m) water/ft (m)	0.0314	0.0370	0.0313	0.00370	Use Eq. (C11.37)
ft (m) slurry/ft (m)	0.0209	0.0247	0.0209	0.0247	ft slurry = ft water/slurry sp. gr.
(*b*) Vertical pipe: ft (m) slurry/ft (m)	0.0140	0.0243	0.0140	0.0243	Same as water
14. Length of horizontal pipe, ft (m)	45.7	45.7	150	150	
15. Length of vertical pipe, ft (m)	9.1	9.1	30	30	
16. Friction loss, ft (m) slurry					
(*a*) Horizontal pipe, ft (m) slurry	0.96	1.13	3.13	3.70	Given
(*b*) Vertical pipe, ft (m) slurry	0.13	0.22	0.42	0.73	Given
17. Head loss through three valves, ft (m)	0.11	0.20	0.37	0.66	3 × $V/(2g)$ × K valve
18. Head loss through four bends, ft (m)	0.40	0.71	1.31	2.33	4 × $V/(2g)$ × K bends
19. Total head loss, ft (m) slurry	1.60	2.26	5.23	7.42	Sum of 16 (*a*), 16 (*b*), 17, and 18
20. Static head, ft (m) slurry	6.10	6.10	20	20	Elevation (outlet − inlet)
21. Total pumping head ft (m) slurry	7.69	8.36	25.23	27.42	Sum of 19 and 20

TABLE C11.4 Weld Joint Factor

Specification no.	Pipe type*	Weld joint factor Pipe mfd. before 1959	Weld joint factor Pipe mfd. after 1959
ASTM A 53	Seamless	1.00	1.00
	Electric resistance-welded	0.85†	1.00
	Furnace lap-welded	0.80	0.80
	Furnace butt-welded	0.60	
ASTM A 106	Seamless	1.00	1.00
ASTM A 134	Electric fusion (arc) welded, single- or double-pass	0.80	0.80
ASTM A 135	Electric resistance-welded	0.85†	1.00
ASTM A 139	Electric fusion-welded, double-submerged arc-welded	0.80	0.80
ASTM A 155	Electric fusion-welded	0.90	1.00
ASTM A 381	Electric fusion-welded, double-submerged arc-welded	—	1.00‡
ASTM A 672 API 5L	Electric fusion-welded	—	1.00
	Seamless	1.00	1.00
	Electric resistance-welded	0.85†	1.00
	Electric flash-welded	0.85†	1.00
	Electric induction-welded	—	1.00
	Submerged arc-welded	—	1.00
	Furnace lap-welded	0.80	0.80§
	Furnace butt-welded	0.60	0.60

* Definitions for the various pipe types (weld joints) are given in paragraph 1100.2 of ASME B31.11 Code.

† A weld joint factor of 1.0 may be used for electric resistance-welded or electric flash-welded pipe manufactured prior to 1959 where

1. Pipe furnished under this classification has been subjected to supplemental tests and/or heat treatment as agreed to by the purchaser, and such supplemental tests and/or heat treatment demonstrates the strength characteristics of the weld to be equal to the minimum tensile strength specified for the pipe; *or*
2. Pipe has been tested as required for a new pipeline in accordance with paragraph 1137.4.1 of the ASME B31.11 Code.

‡ For classes and grades that have been hydrostatically and nondestructively tested to specification requirements.

§ Manufacture was discontinued and process deleted from API 5L in 1962.

pipelines carrying mineral concentrate, the slurry pH is adjusted to 9.0 or higher, using lime to reduce the corrosion rate.

Slack Flow and Its Control

Slack flow occurs when the available static head between the discharge point of the pipeline and a given point in the pipeline exceeds the friction loss between

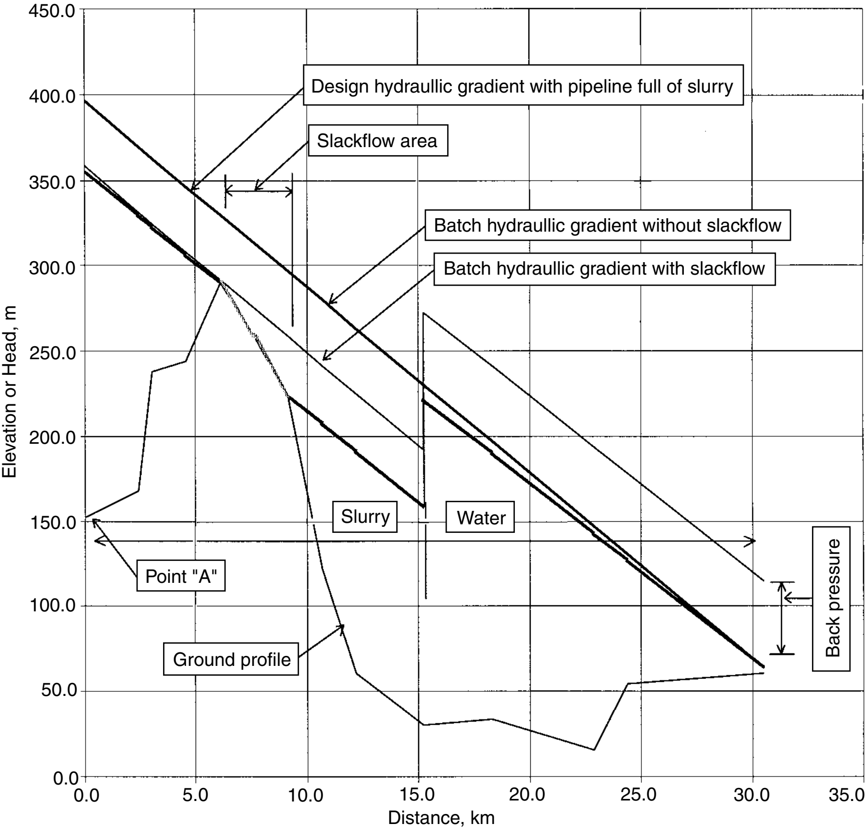

FIGURE C11.16 Pipeline profile and hydraulic gradient showing design gradient, batch gradient, and slack flow area.

those points at a given flow rate. It usually occurs just downstream of peaks where the hydraulic gradient intersects the ground profile. For example, Fig. C11.16 shows slack flow area.

In slack flow areas, the velocity of flow is governed by the pipe slope. The velocity in the slack flow area is higher than that in the fully packed pipe section. The section of pipe which flows full and is under pressure is called *fully packed.* In slack flow sections the pipe flows partly full, and pressure generally drops below atmospheric. Erosion takes place in the slack flow area owing to higher flow velocity as well as possible cavitation at the point where the pipeline changes from slack flow to a packed flow condition.

Because of the higher density of slurry compared to water, slack flow can occur when water is displaced by slurry. For example, Derammelaere and Chapman[46] have described the development of slack flow in the Samarco iron concentrate pipeline during operation of the pipeline in batch mode. This is illustrated in Fig.

C11.16, where the hydraulic gradients for pipe full of slurry as well as for batch operation are shown.

Slack flow can be avoided by using a smaller-diameter pipe section or orifice chokes. The velocity of flow in the smaller-diameter pipe should not exceed about 10 ft/s (3 m/s); otherwise, erosion may occur. Either orifice chokes or a combination of orifice chokes and smaller-diameter pipe may be used to achieve flexibility and economy.

Storage

It is very seldom that the flow of solids in a slurry pipeline matches its rate of production at the mine site or its rate of utilization at the terminal facility. To provide means by which the pipeline can operate efficiently by transporting solids in a nearly continuous fashion, storage facilities are required at both ends of the line. The type and amount of storage are determined by the specific system operating parameters as well as the characteristics of the material being transported.

Tanks

For live slurry storage at the head and tail ends of a long-distance pipeline system, agitated tanks are typically utilized. The number and size to be used are determined by comparing the plant and pipeline availabilities in addition to normal engineering criteria such as allowable soil loadings and an economic analysis of available sizes. If the pipeline is to be operated in batch mode, for the first few years of operation, because of low throughput requirements, the size of the tanks may be determined by the minimum batch length chosen for the system. This in turn is a function of pipeline length.

Agitated storage may also be required at intermediate pump stations. The purpose would be to facilitate pipeline section reconnection during restart operations as well as hold slurry which has been flushed from station piping during pump change-out.

Ponds

Ponds are utilized for the storage of high volumes of solids over intermediate to long periods. Ponds are generally used when the storage requirement exceeds 24 h of pipeline flow. Their prime advantage is that no energy is required to maintain continuous suspension of the solids.

Slurry storage ponds can be classified into two basic types: semiactive and dead storage. Semiactive ponds are equipped for recovery and reslurrying on short notice. Depending on the design, it may be necessary to remove all the stored material before refilling the pond.

The major consideration in pond design is recovery of a uniform solids particle size distribution. Segregation of the solids can occur during the filling or recovery operation. The resulting coarse and fine slurry slugs can be very difficult to handle in the downstream processes. Three major recovery methods have been utilized: mechanical, dredge, and the Marconaflo technique.

Mechanical recovery uses conventional earthmoving equipment to remove the settled solids. Prior to the start of recovery operations, the bulk of the free water must be removed from the pond by evaporation, natural drainage, sand points, or an underdrain system.

Dredge recovery requires the maintenance of a water layer over the settled solids to float the dredge. The recovery dredge may be maintained on site or moved in for the recovery operation, depending on whether semiactive or dead storage is required.

The Marconaflo technique[47] was originally developed to remove settled slurries from the hold of ore ships. A high-pressure water jet on a rotating head undercuts and reslurries the solids, and the material flows into an underdrain system for pumping away.

Slurry Pumps

Centrifugal as well as positive displacement pumps are available for pumping slurry. The maximum pressure capability and maximum particle size limits for different types of pumps are shown in Fig. C11.17.[48]

The positive displacement pumps can be divided into piston, diaphragm, and plunger pumps. Piston pumps can be used for relatively less abrasive materials while the diaphragm and plunger pumps are used for handling abrasive slurries at high pressures. The initial capital costs and maintenance costs of positive displacement pumps are higher than those of centrifugal pumps, but their hydraulic efficiency is 85 percent, compared to about 60 to 70 percent for the centrifugal slurry pumps. The flow rate per pump is limited in the case of positive displacement pumps while

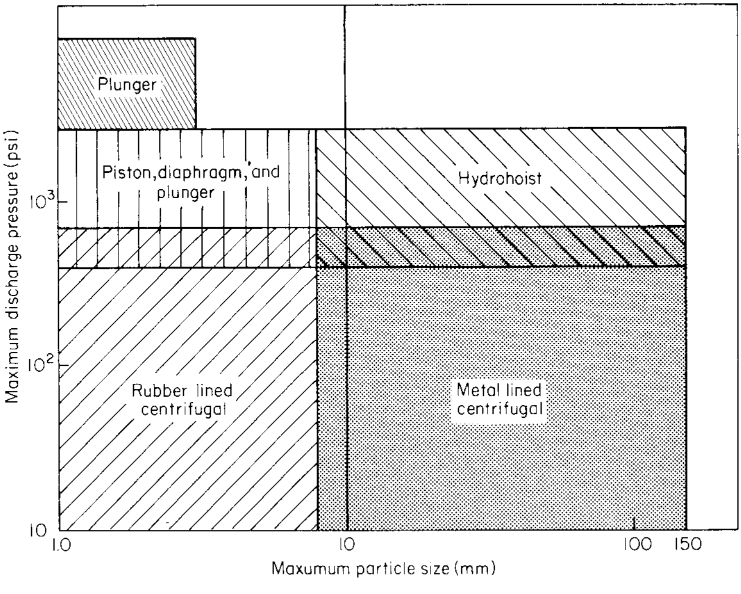

FIGURE C11.17 Maximum particle size and pressure capabilities of different types of pumps.

the head developed per pump is limited to about 30 m in the case of centrifugal slurry pumps.

Centrifugal Slurry Pumps. Centrifugal pumps are extensively used for pumping slurry under relatively low pressure. The main advantages of these pumps are as follows:

1. High flow rates can be achieved with a single unit at a relatively low initial cost. Pumps capable of pumping 25,000 gpm (5680 m^3/h) are available.
2. Very few moving and wearing parts are involved.
3. They are simple to operate and maintain.
4. There is no practical restriction on the maximum size of solids that can be handled.
5. The flow through the pump is pulse-free.
6. They require little space.
7. Valves are not required for the operation of the pump.

Centrifugal pumps have the following shortcomings:

1. The maximum discharge head is limited to less than 130 ft (40 m) for a single-stage pump. With several pumps in series, a maximum pressure of about 750 psi (5.17 MPa) can be achieved.
2. The flow rate of the pump is governed by the system pressure.
3. Attrition of friable solids may occur due to the high velocity of flow through the pump. Attrition can become important if the slurry has to pass through a number of pumps.
4. Seal liquid is required for good packing life. The seal liquid dilutes the slurry. The amount of dilution could become significant when the slurry passes through a number of pumps.
5. Centrifugal slurry pumps are made robust because of the abrasion of parts coming in contact with slurry, resulting in a low pump efficiency.

The centrifugal pump parts exposed to wear from slurry are the casing, impeller, and gland seal. Mechanical shaft seals often are ineffective in slurry installations. A seal that incorporates a liquid flush to keep solids from entering the gland is necessary.

To obtain good service, the casing and impeller should be lined with abrasion-resistant material. Both rubber-lined and ‘‘Ni-hard’’ (metal-lined) units are used extensively. The size of the solids to be pumped determines the type of pump to be selected. Rubber-lined pumps are generally used with particles up to about 0.375 in (9.5 mm), and Ni-hard pumps are used for coarser slurries. However, if material with sharp cutting edges is being pumped, such as crushed glass, Ni-hard pumps can be used even for relatively fine solids. Rubber-lined pump parts usually have longer service life with fine materials. Coal is one material for which Ni-hard line pumps have shown better parts life than rubber-lined units.

To obtain good pump parts life, it is good practice to limit the impeller tip speed to less than 4000 ft/min (1220 m/min). The pump parts life on units running faster than this speed drops in proportion to the square of the impeller tip speed.

Reciprocating Pumps. Reciprocating pumps have several desirable features:

- The flow rate of the pump is independent of system pressure.
- They can meet any reasonable system discharge pressure requirement. Pumps capable of producing 2300 psi (15.8 MPa) pressure have been used in magnetite pipelines. Units capable of discharge pressures greater than 5,000 psi (34.5 MPa) are available.
- The overall efficiency of the pump, including drivetrain, is relatively high—on the order of 85 percent.
- Pipeline flow rate can be determined without the use of a flowmeter.

The following disadvantages are associated with this type of unit:

- The maximum flow rate per pump is limited to less than about 3900 gpm. Furthermore, this capacity is only available at relatively low discharge pressures. Therefore, a large number of pumps operating in parallel are needed to handle the high flow rates and working pressures found in large long-distance systems. For example, seven 1,250-hp units are used at each pump station of the Samarco system.
- Initial capital costs and maintenance costs are usually high. Skilled labor is required for operation and maintenance.
- Variable-speed drives are needed to vary flow rates.
- The flow through the pump is pulsating, which requires greater attention to station piping design to avoid vibration and fatigue problems.
- The maximum size of particles that can be pumped is restricted by the check valve seal requirements.

For material with a maximum particle size of less than 0.1 in (2.5 mm) and with discharge pressures up to about 2000 psi (13.8 MPa), either piston or plunger pumps can be used. Slurry with a maximum particle size of 0.1 to 0.25 in (2.5 to 6 mm) may also be handled with these types of pumps if special design pump valves are used.

The decision to use piston or plunger pumps is usually based on the results of a Miller abrasivity test. Material with a Miller number below 30 can be handled using piston pumps, and material with a Miller number above 60 should be pumped with plunger units. Between these values, the type of pump to use is based upon other considerations:

- Piston pumps can be of double-acting design so that about twice the flow rate can be obtained for the same physical pump size.
- Plunger pumps are more adapatable to flushing and lubrication. A flushed stuffing box can prolong parts life. However, a flush fluid free of solids must be provided, and some dilution of the slurry will result.

Piston Pumps. Figure C11.18 shows the fluid end of a conventional piston pump. With such a unit, major wear occurs on the pistons, valves, cylinder liners, piston rods, and packing.

To reduce maintenance, several variations of piston pumps have been developed that limit the number of working parts in contact with the slurry. One such type is the diaphragm pump, the fluid end of which is sketched in Fig. C11.19. By pumping

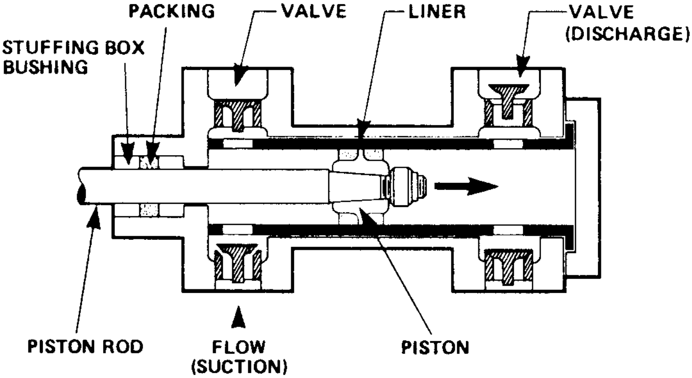
PACKING
VALVE
LINER
VALVE (DISCHARGE)
STUFFING BOX BUSHING
PISTON ROD
FLOW (SUCTION)
PISTON

FIGURE C11.18 Plunger pump fluid end.

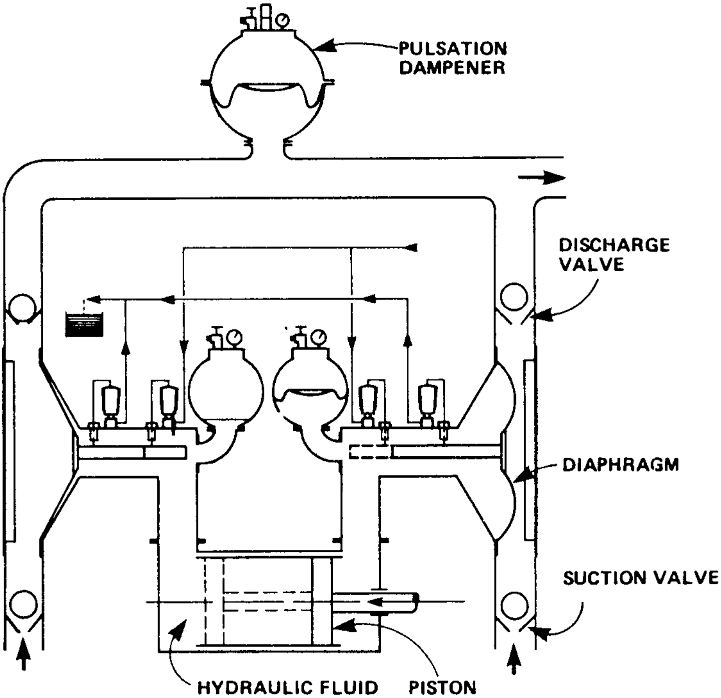
PULSATION DAMPENER
DISCHARGE VALVE
DIAPHRAGM
SUCTION VALVE
HYDRAULIC FLUID
PISTON

FIGURE C11.19 Diaphragm pump fluid end.

hydraulic fluid with a piston pump, the diaphragm is alternately squeezed and expanded. With this type of pump, the valves and diaphragm are the only parts that experience major wear. One disadvantage is the possibility of diaphragm failure. However, this can be minimized through careful pump design by limiting the amount of diaphragm flexing and by selecting the membrane elastomer carefully. In addition, suppliers offer visual and audible monitoring systems to detect diaphragm failure. Units are available that will limit the amount of slurry entering the propelling fluid chamber.

Plunger Pumps. Because abrasive slurries can greatly reduce the life of the pistons and cylinder liners of conventional piston units, plunger pumps are often used. This type of pump maintains a clear liquid barrier between the plunger and packing by means of a flushing system, as shown in Fig. C11.20. Major wear is limited to the plunger, valves, and packing.

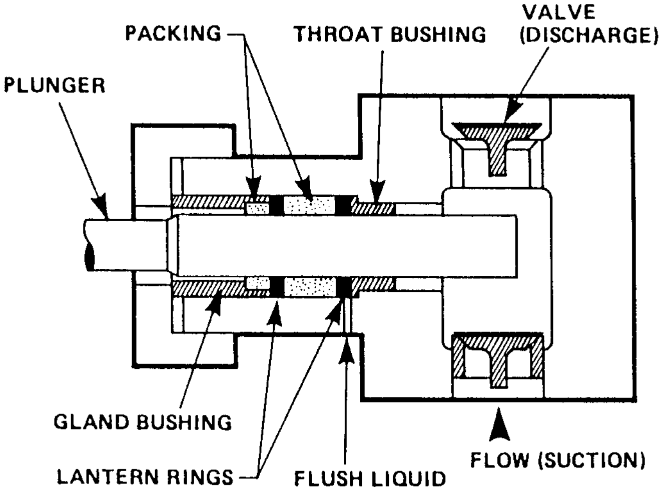

FIGURE C11.20 Plunger pump fluid end.

Hydrohoists. The limitation of maximum particle size for positive displacement pumps and the limitation of pump discharge pressure for centrifugal pumps can be eliminated by using a hydrohoist system. Figure C11.21 shows a sketch of a hydrohoist pumping system. The hydrohoist consists of one or more chambers that can be filled with solids either in dry form (lock-hopper) or as a slurry. Once the chamber is filled with solids, water under high pressure is admitted to the chamber to push the solids into the pipeline. A major application is found in vertical transportation of coarse ore from deep mines. The advantages of these devices are as follows:

- Large solids can be pumped under high pressure without having them pass through a number of centrifugal pumps. The attrition of solids is thereby reduced.
- A high-pressure water pump, having relatively high efficiency compared to a centrifugal slurry pump, is used.

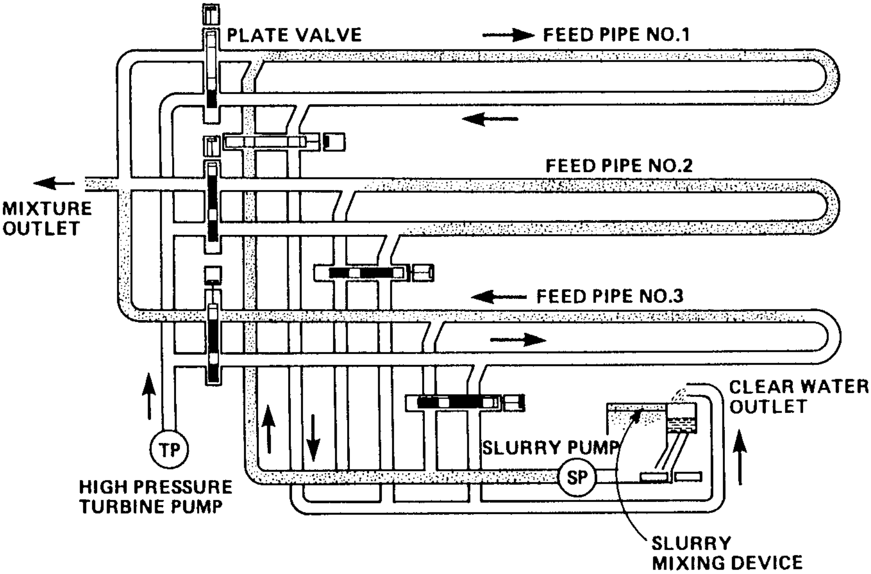
PLATE VALVE
FEED PIPE NO.1
FEED PIPE NO.2
MIXTURE OUTLET
FEED PIPE NO.3
CLEAR WATER OUTLET
TP
HIGH PRESSURE TURBINE PUMP
SLURRY PUMP
SP
SLURRY MIXING DEVICE

FIGURE C11.21 Sketch of a hydrohoist.

- The number of moving parts exposed to slurry is considerably less than that with reciprocating units.
- The life of slurry check valves is extended because of the reduced frequency of operation compared to reciprocating pumps; normally the valves open and close in the presence of water.
- A larger capacity can be obtained with a hydrohoist than with a reciprocating pump operating at the same discharge pressure.

The disadvantages of the hydrohoist system are as follows:

- A sophisticated control system is needed to open and close the slurry valves.
- The flow rate of this device depends upon the system discharge pressure since a high-pressure centrifugal water pump is used.

Pump Power. The pump power is computed from the following equation:

$$\mathrm{HP} = \frac{\mathrm{QP}}{F \times \text{efficiency}} \tag{C11.46}$$

where HP = pumping power, kW (hp)
Q = flow rate, $\mathrm{m^3/h}$ (gpm)
P = increase in pressure across the pump, Pa (psi)
F = conversion factor, 1714 hp/(gpm·psi) $\{3.6 \times 10^6\ \mathrm{kW/[m^3/(h \cdot Pa)]}\}$

Example C11.13. Select the type, number, and power of pumps based on the following:

Flow rate	3000 gpm (680 m^3/h)
Rise in head across pump(s)	260 ft (80 m)
Specific gravity of slurry	1.5

Solution. The pressure rise across the pumps is 260 ft × 1.5 × 62.4/144 psi = 169 psi (1.177 MPa). Select centrifugal slurry pumps. Assume three pumps operating in series to get a total head rise of 260 ft (80 m).

Assuming a pump efficiency of 70 percent, the power per pump is obained as follows:

$$\mathrm{HP} = \frac{3000 \times 169/3}{1714 \times 0.7}$$

$$= 141 \qquad \text{Use 150-hp motors.}$$

$$\text{Power} = \frac{680(1.17)/3}{3.6(0.7)}$$

$$= 106\,\mathrm{kW}$$

Life of Pump Parts. Typical parts life for the different types of slurry pumps is given in Table C11.5. The actual life depends upon the pump speed, discharge pressure, and abrasivity of the slurry.

TABLE C11.5 Pump Parts Life

	Part life			
Pump part	Piston	Plunger	Diaphragm	Centrifugal
Piston Rod	3000	n/a	n/a	n/a
Plunger sleeve	n/a	700	n/a	n/a
Piston liner	4000	n/a	n/a	n/a
Packing	6000	400	n/a	1500
Diaphragm	n/a	n/a	8000	n/a
Valve seat	1000	800	5000	n/a
Valve body	1000	800	3000	n/a
Valve insert	1000	500	3000	n/a
Impeller	n/a	n/a	n/a	6000
Casing	n/a	n/a	n/a	6000

Selection of Valves

There are many manufacturers and types of valves offered for low-pressure slurry service. These designs are backed by years of experience in the minerals and dredging industries. Selection of valves for use in positive displacement slurry pump stations introduces some new parameters besides those that must be considered in selecting low-pressure valves. These include vibration of the piping and packing of solids into the void spaces in the valves.

Generally speaking, in high-pressure duty where a full opening is not required, lubricated plug valves have been applied. Depending on the service, the wetted parts of these valves should be hardfaced to minimize abrasive wear during the opening or closing cycle. Gate or ball valves have been used where a full round opening is required. Both types introduce the problem of removing solids from the body cavity after the valve has been operated in slurry. Again, it may be necessary to hardface some wetted parts to extend the valve life.

Slurry valves require regular lubrication and maintenance to remain operable. An important feature in selecting valves is the ease of disassembly for maintenance. Some ball valves, for instance, have to be sent to the factory to renew the seats or seals. Some maintenance problems may simply be a matter of solids finding their way into the valve workings, with the solution simply being disassembly and cleanup of the valve. Some slurries (such as limestone) may have some cementation properties. Therefore, it is good practice to regularly lubricate and exercise valves that are otherwise infrequently used.

Abrasion Control

Pipe abrasion is a major concern in coarse solids pipelines. In temporary systems, the pipeline may be replaced periodically. For example, the phosphate mining industry in Florida replaces temporary steel pipes after about 2 years of operation.[49] Use of special pipes, nonferrous pipes, and steel pipes lined with abrasion-resistant linings can significantly increase the life of pipes carrying coarse solids. Example C11.12 addresses the subject of corrosion-erosion control for long-term service.

Nonferrous Pipes. For low pressure applications, a number of nonferrous materials can be considered for transporting coarse solids.[50]

Polyethylene. Ultrahigh-molecular-weight polyethylene has been extensively used for tailings line construction. For sizes up to NPS 14 (DN 350), it is available with pressure ratings up to 250 psi (1725 kPa). This material is a major improvement over unlined carbon steel or wood, and under good conditions it lasts many times longer than the material it replaces.

Polybutylene. Polybutylene pipe is a flexible thermoplastic pipe that has been developed relatively recently. Depending upon the diameter, it is normally available with pressure ratings up to 200 psi (1380 kPa), although higher-pressure pipes have been made. Polybutylene has two major advantages compared to polyethylene: the tensile strength is higher, and it is less affected by extremes of temperature.

Polyurethane. This type of pipe has been used for some in-plant systems, in particular, coal cleaning plants. The polyurethane is spun-cast into flanged spools up to NPS 12 (DN 300).

Other Nonferrous Materials. Polyvinylchloride (PCV) polypropylene and acrylonitrile-butadiene-styrene (ABS) have been made into pipe but have poor wear resistance compared to polyethylene and polybutylene. They should not be considered for long-life slurry applications.

Fiberglass pipe is available with ceramic chips or tile embedded into the inner surface. This material is quite expensive, and once the chips are broken out, the epoxy matrix that holds the chips has very poor wear resistance and the pipe quickly fails. Also, joint systems designed to take high pressure are prone to failure. Abrasive particles attack the groove left at the joint, and early failure may result.

Internally Lined Steel. Many of the materials discussed in the previous section can also be utilized as a lining within a steel outer shell. By utilizing such a system, the inherent pressure limitations of nonferrous materials can be overcome. In most cases, the use of a composite pipe leads to difficulty in joining the pipe sections. Most systems require the use of steel flanges with the lining material serving as the gasket material.

In Situ Lining of Steel Pipe. Two methods of in situ internal lining of welded steel pipe have been developed. In one method a plastic pipe of slightly smaller diameter than the inside diameter of steel pipe is pulled inside, and the annular space between the two pipes is grouted with cement. In another method a high-density polyethylene pipe of slightly larger outside diameter than the inside diameter of the steel pipe is installed by pulling it after compressing it to reduce its outside diameter. The pipe expands and presses against the steel pipe upon release of pulling forces.

These liners are pulled inside the steel pipe, which is welded prior to pulling the liner. The liner can be pulled to a distance of 1 km depending upon the pipe size and the number of bends in the steel pipe.

In either method, best mechanical design and economic results are obtained when lining is planned for in the beginning. In an operating pipeline these lining methods can be used to extend service life.

Instrumentation

The instrumentation used and the major parameters measured and controlled are as follows:

Pressure. Both the suction and discharge pressures at a pump station are normally measured and controlled. Suction pressure is controlled to prevent cavitation. The discharge pressure is controlled so as not to exceed the maximum allowable pressure for the pump unit or the pipeline system. Bourdon-type pressure gages with an isolation diagram are generally used.

Density. The pumping head requirement varies with the changes in slurry density. If the slurry density is not controlled within the pipeline design limits, the pipeline system can be overpressurized or the flow velocity could drop below the deposition critical velocity.

Slurry density is normally measured by radiation gages. Density meters may be needed at each pump station in a multiple-station system. The density meters are normally installed on the suction side of a pump station.

Density is controlled by adding dilution water to high-density slurry. If the density is too low, the slurry can be returned to the preparation plant for concentrating.

Flow Rate. Because slurries are often abrasive by nature, some in-line flow-measuring devices such as orifice plates and pitot tubes are not applicable. For primary slurry flowmetering, magnetic flowmeters are considered the best choice. Ultrasonic flowmeters sometimes are used in applications including oil slurries where magnetic flowmeters are unsuitable.

Slurry Tank Level Measurement. A number of different systems have been used for recording the level in slurry storage tanks.

Conductance probes for level alarms and a pressure sensor mounted in the wall of the tank are used to obtain a rough indication of level of slurry in the tank. This procedure has proved satisfactory although the accuracy of the level measurement with a pressure sensor is affected by changes in slurry density. A way to compensate for this effect is available but not commonly used. Sonic devices provide direct measurement of tank level.

REFERENCES

1. Linssen, J.G.Th., ''The Performance and the Future Development of Dredging Equipment,'' First International Symposium on Dredging Technology, University of Kent at Canterbury, England, BHRA Fluid Engineering, Paper A1, 17–19th September, 1975.
2. Blatch, N.S., Discussion of ''Works for the Purification of the Water Supply of Washington, D.C.,'' by Hazem, A. and Hardy E.D., *Trans. ASCE*, vol. 57, pp. 400–9, 1906.
3. Gregory, ''Pumping Clay Slurry Through a Four-Inch Pipe,'' *Mech. Engg.*, vol. 49, no. 6, 1927.
4. O'Brien, M.P., and Folsom, R.G., ''The Transportation of Sand in Pipelines,'' University of California, November 12, 1937.
5. Howard, G.W., ''Transportation of Sand and Gravel in a Four-Inch Pipe,'' *ASCE*, vol. 104, 1939.
6. Caldwell, D.H., and Babbit, H.E., ''The Flow of Muds, Sludges and Suspensions in Circular Pipes,'' *Trans. A. I. Ch. E.*, vol. 37, pp. 237–66, February 1941.
7. Durand, R., ''Basic Relationships of the Transportation of Solids in Pipes—Experimental Research,'' *Proc. International Assoc. for Hydraulic Research*, Minneapolis, Minn., Sept. 1–4, 1953.
8. Zandi, I., ''Hydraulic Transport of Bulky Materials,'' Paper 1—Advances in Solid-Liquid Flow in Pipes and Its Application, edited by Iraj Zandi, Pergamon Press, 1971.
9. Thomas, D.G., ''Transport Characteristics of Suspension: VIII. A Note on the Viscosity of Newtonian Suspensions of Uniform Spherical Particles,'' *J. of Colloid Science*, vol. 20, no. 3, pp. 267–277, March 1967.
10. Chong, J.S., Christiansen, E.B., and Baer, A.D., ''Rheology of Concentrated Suspensions,'' *J. Applied Polymer Sci.* vol. 15, pp. 2007–2021, 1971.
11. Gay, E.D., Nelson, P.A., and Armstrong, W.P., ''Flow Properties of Suspensions with High Solids Concentration,'' *AIChE Journal*, vol. 15, no. 6, pp. 815–822, November 1969.
12. Hanks, R.W., and Pratt, D.R., ''On the Flow of Bingham Plastic Slurries in Pipes and Between Parallel Plates,'' *Society of Petroleum Engineers Journal*, pp. 342–346, December 1967.
13. Hanks, R.W., and Ricks, B.L., ''Laminar-Turbulent Transition in Flow of Pseudoplastic Fluids with Yield Stress,'' *J. Hydronautics*, vol. 8, no. 4, pp. 163–166, October 1974.
14. Dodge, D.W., and Metzner, A.B., ''Turbulent Flow of Non-Newtonian Systems,'' *AIChE Journal*, vol. 5, no. 2, pp. 189–204, June 1959.
15. Stainsby, R., and Chilton, R.A., ''Prediction of Pressure Losses in Turbulent Non-Newtonian Flows: Development and Application of a Hybrid Rheological Model,'' *Hydrotransport*, vol. 13, pp. 21–39, BHRA Fluid Engineering, Cranfield, Bedford, England, May 1996.
16. Hanks, R.W., and Dadia, B.H., ''Theoretical Analysis of the Turbulant Flow of Non-Newtonian Slurries in Pipes,'' *AIChE Journal*, vol. 17, pp. 554–557, May 1971.
17. Hanks, R.W., ''Low Reynolds Number Turbulent Pipeline Flow of Pseudohomogeneous Slurries,'' *Hydrotransport*, vol. 5, pp. C2-23–C2-34, BHRA Fluid Engineering, Cranfield, Bedford, England, May 1978.

18. Dodge, D.W., and Metzner, A.B., "Turbulent Flow of Non-Newtonian Systems," *AIChE Journal*, vol. 5. no. 2, pp. 89–204, June 1959.
19. Hanks, R.W., and Ricks, B.L., "Transitional and Turbulent Pipeflow of Pseudoplastic Fluids," *J. Hydronautics*, vol. 9, no. 1, pp. 18–23, January 1975.
20. Hanks, R.W., "Low Reynolds Number Turbulent, Pipeline Flow of Pseudohomogeneous Slurries," *Hydrotransport*, vol. 5, pp. C2-23–C2-34, BHRA Fluid Engineering, Cranfield, Bedford, England, May 1978.
21. Torrance, B.Mck., *South African Mechanical Engineer*, vol. 13, p. 89, 1963.
22. Wilson, K.C., and Thomas, A.D., "A New Analysis of the Turbulent Flow of Non-Newtonian Fluids," *Can. J. Chem. Eng.*, vol. 63, pp. 539–546, 1985.
23. Thomas, A.D., and Wilson, K.C., "New Analysis of Non-Newtonian Turbulent Flow—Yield Power Law Fluids," *Can. J. Chem. Eng.*, vol. 65, pp. 335–338, 1987.
24. Stainsby, R., and Chilton, R.A., "Prediction of Pressure Losses in Turbulent Non-Newtonian Flows: Development and Application of a Hybrid Rheological Model," *Hydrotransport*, vol. 13, pp. 21–39, BHRA Fluid Engineering, Cranfield, Bedford, England, May 1996.
25. Durand, R., "Basic Relationships of the Transportation of Solids in Pipes—Experimental Research," *Proc. International Assoc. for Hydraulic Research*, Minneapolis, Minn., Sept. 1–4, 1953.
26. Zandi, I., and Govatos, G., "Heterogeneous Flow of Solids in Pipeline," *Proc. Hydraulics Division, ASCE*, vol. 93, pp. 145–159, May 1967.
27. Wasp, E.J., et al., "Deposition Velocities and Spatial Distribution of Solids in Slurry Pipelines," *Hydrotransport*, vol. 1, BHRA Fluid Engineering, Cranfield, Bedford. England, September 1970.
28. Graf, W.H., Robinson, M., and Ucel, O., "The Critical Deposit Velocity for Solid-Liquid Mixtures," *Hydrotransport*, vol. 1, BHRA Fluid Engineering, Cranfield, Bedford, England, September 1970.
29. Oroskar, A.R., and Turian, R.M., "The Critical Velocity in Pipeline Flow of Slurries," *AIChE Journal*, vol. 26, no. 4, pp. 550–558, July 1980.
30. Wilson, K.C., and Judge, D.G., "Analytically-Based Nomographic Charts for Sand-Water Flow," *Hydrotransport*, vol. 5, BHRA Fluid Engineering, Cranfield, Bedford, United Kingdom, May 1978.
31. Wilson, K.C., "Deposition-Limit Nomograms for Particles of Various Densities in Pipeline Flow," *Hydrotransport*, vol. 6, BHRA Fluid Engineering, Cranfield, Bedford, United Kingdom, September 1979.
32. Durand, R., "Basic Relationships of the Transportation of Solids in Pipes—Experimental Research," *Proc. International Assoc. for Hydraulic Research*, Minneapolis, Minn., Sept. 1–4, 1953.
33. Zandi, I., and Govatos, G., "Heterogeneous Flow of Solids in Pipeline," *Proc. Hydraulics Division, ASCE*, vol. 93, pp. 145–159, May 1967.
34. Turian, R.M., and Yuan, T., "Flow of Slurries in Pipelines," *AIChE Journal*, vol. 23, no. 3, pp. 232–243, May 1977.
35. Newitt, D.M., Richardson, J.F., Abbott, M., and Turtle, R.B., "Hydraulic Conveying of Solids in Horizontal Pipes," *Trans. Inst. Chem. Engrs.*, vol. 33, pp. 93–110, 1955.
36. Babcock, H.A., "Heterogeneous Flow of Heterogeneous Solids," in *Advances in Solid-Liquid Flow in Pipes and Its Application*, I. Zandi, ed., pp. 125–148, Pergamon Press, New York, 1971.
37. Wasp, E.J., Regan, T.J., Withers, J.G., Cook, P.A.C., and Clancey, J.T., "Cross Country Pipeline Hydraulics," *Pipeline News*, vol. 35, pp. 20–28, July 1963.
38. Wasp, E.J., Kenney, J.P., and Gandhi, R.L., "Solid Liquid Flow Slurry Pipeline Transportation," *Trans. Tech Publications*, 1977.

39. Lazarus, J.H., ''Mixed Regime Slurries in Pipelines I: Mechanistic Model,'' *J. Hydraulic Eng.* vol. 115, no. 11, American Society of Civil Engineers, pp. 1496–1509, November 1989.

40. Wilson, K.C., ''Stationary Deposits and Sliding Beds in Pipes Transporting Solids,'' *Hydrotransport*, vol. 1, BHRA Fluid Engineering, Cranfield, United Kingdom, Paper C3, pp. 28–40, 1970.

    Wilson, K.C., Streat, M., and Bantin, R.A., ''Slip Model Correlations of Dense Two Phase Flow,'' *Hydrotransport*, vol. 2, BHRA Paper b1, pp. 1–10, 1972.

    Wilson, K.C., ''Stationary Deposits and Sliding Beds in Pipes Transporting Solids,'' *Proc. 1st International Symposium on Dredging Technology*, BHRA, Paper C3, pp. 28–40, 1975.

    Wilson, K.D., ''A Unified Physically-Based Analysis of Solid-Liquid Pipeline Flow,'' *Hydrotransport*, vol. 4, Paper A2, pp. 1–16, 1976.

    Wilson, K.C., ''Deposition Limit Nomograms for Particles of Various Densities in Pipeline Flow,'' *Hydrotransport*, vol. 6, Paper A1, pp. 1–12, 1979.

    Wilson, K.C., ''Evaluation of Interfacial Friction for Pipeline Transport Models,'' *Hydrotransport*, vol. 11, pp. 102–116, 1988.

    Wilson, K.C., Addie, G.R., and Clift, R., *Slurry Transport Using Centrifugal Pumps*, Elsevier Applied Science, New York, 1991.

41. Gillis, R.G., Shook, C.A., and Wilson, K.C., ''An Improved Two Layer Model for Horizontal Slurry Pipeline Transport,'' *Can. J. of Chem. Eng.*, vol. 9, pp. 173–178, February 1991.

42. Worster, R.L., and Denny, D.F., ''Hydraulic Transport of Solid Materials in Pipes,'' *Proc. Institute of Mechanical Engineering*, vol. 169, 1955.

43. Kao, D.T.Y., and Hwang, L.Y., ''Critical Slope for Slurry Pipeline Transporting Coal and Other Solid Particles,'' *Hydrotransport*, vol. 6, BHRA Fluid Engineering, Cranfield, Bedford, England, September, 1979.

44. Turian, R.M., Hsu, F.L., and Selim, S., ''Friction Losses for Flow of Slurries in Pipeline Bends, Fittings and Valves,'' *Particulate Science and Technology*, vol. 1, no. 4, pp. 365–392, 1983.

45. Gandhi, R.L., Ricks, B.L., and Aude, T.C., ''Control of Corrosion-Erosion in Slurry Pipelines,'' *1st International Conference on Internal and External Protection of Pipes*, BHRA Fluid Engineering, Cranfield, Bedford, England, Paper G2, September 1972.

46. Derammelaere, R.H., and Chapman, J.P., ''Slack Flow in the World's Largest Iron Concentrate Slurry Pipeline,'' *Proc. 4th International Technical Conference on Slurry Transportation*, Las Vegas, Nev., March 28–30, 1979.

47. Lutjen, G.P., ''Marconaflo—the System and the Concept,'' *Engineering and Mining J.*, pp. 67–75, May 1970.

48. Gandhi, R.L., Snoek, P.E., and Carney, J.C., ''An Evaluation of Slurry Pumps,'' *Proc. 5th International Technical Conference on Slurry Transportation*, Lake Tahoe, Nev., March 26–28, 1980.

49. Faddick, R.R., and Staman, O.D., ''Pipeline Transportation of Phosphate Slurries—A Survey,'' Colorado School of Mines Research Institute, *Mineral Industries Bulletin*, vol. 20, no. 6, November 1977.

50. Snoek, P.E., and Carney, J.C., ''Pipeline Material Selection for Transport of Abrasive Tailings,'' *Proc. 6th International Technical Conference on Slurry Transportation*, Las Vegas, Nev., March 24–27, 1981.

PART D

NONMETALLIC PIPING

CHAPTER D1

THERMOPLASTICS PIPING

Dr. Timothy J. McGrath
Principal
Simpson Gumpertz & Heger Inc.
Arlington, Massachusetts

Stanley A. Mruk
Plastics Pipe Consultant
New Providence, New Jersey

SCOPE

This chapter reviews the principal properties and uses of thermoplastics piping, discusses its advantages and limitations, and presents general and basic information on materials, properties, standardization, design, and installation. This information is intended to guide the reader in evaluating the applicability of thermoplastics piping for an intended application; in choosing the appropriate material and product; and in its proper design and installation. References are provided for more detailed information and for further guidance on these and related subjects.

INTRODUCTION

Plastics piping is made from either of two basic groups of synthetic materials, *thermoplastic* and *thermosetting.* Thermoplastics can be softened and reshaped repeatedly by the application of heat. In contrast thermosetting materials are irreversibly *set,* or *cured,* or *hardened* into a permanent shape during factory manufacture. Once *hardened* into their final shape, thermosetting products cannot be softened and therefore may not be reshaped by heating.

Thermoplastic materials include minimal reinforcements, whereas thermosetting resins are almost always combined with reinforcements (such as glass fibers) and sometimes fillers (such as sand) to produce structurally integrated composite constructions. Chapter D2 in this handbook presents information on fiberglass reinforced thermosetting resin piping.

Principal Materials

Thermoplastics account for the lion's share of plastics used for piping. During 1989, over 95 percent of the approximately 7.5 billion pounds (3.75 million metric tons) of plastics that went into pipe, conduit, and fittings consisted of thermoplastics.[1] *Polyvinyl chloride* (PVC) accounted for about three-quarters of all thermoplastic pipe. The second most widely used thermoplastic is *polyethylene* (PE), accounting for about a 15 percent share, followed by *acrylonitrile-butadiene-styrene* (ABS), representing about a 4 percent share. The balance about 6 percent, consists of special-purpose materials, such as chlorinated polyvinyl chloride (CPVC), cross-linked polyethylene (PEX), polybutylene (PB), polypropylene (PP), and various fluorinated polymers, principally polyvinylidene fluoride (PVDF). In 1955, total U.S. shipments of thermoplastic pipe were under 40 million pounds (18,000 metric tons). By 1998, the rate of shipments had increased almost 200 fold, and it is still growing.

More footage of thermoplastic pipe is now being installed than that of all other types of piping materials combined.[2] However, the total dollar value of installed thermoplastic pipe is second to and only about one-quarter of that of the leading material, steel.[3] This is because the principal use of thermoplastics piping is in the smaller sizes. But the very successful track record in these sizes has been leading to increasing acceptance and use of the larger diameters, which currently comprise the fastest growing segment. As of this writing, thermoplastic pipe is available through NPS 60* (DN1500) for pressure uses and NPS 108 (DN 2700) for sewer and drain applications.

The first thermoplastic tubes were made in Germany during the 1930s from a PVC copolymer. Thermoplastics pipe was first manufactured commercially in the United States in 1940 from cellulose acetate butyrate (CAB) and was used by The Southern California Gas Company for distributing natural gas. Volume production commenced in 1948 when PE pipe was first offered for non-code-regulated water service applications. ABS and PVC pipe were first commercially made in the United States in 1949 and 1950, respectively. During the 1940s and 1950s many fundamental advances were introduced in polymer chemistry, materials formulation, and product fabrication technology, which laid the foundation for the thermoplastics pipe industry. Improvements in these areas are still continuing.

However, the start of the evolution of thermoplastics piping as engineering materials is considered to have taken place in 1950 when an American Society for Testing and Materials (ASTM) group for plastics pipe standardization was organized. Soon thereafter the first ASTM standards covering materials, test methods, and piping products began to be issued. At present over 180 ASTM standards define plastic piping, plastic piping materials, test methods, and recommended practices for joining and installation. Numerous plastics piping standards have also been issued by other organizations. A listing of the principal U.S. and Canadian plastic piping product standards is presented in Table D1.1.

Available Products

Plastics pipe and fittings are available in a vast array of materials, diameters, wall thicknesses, and designs. For nonpressure applications special wall constructions are offered—such as double wall, ribbed, and foamed core—which are designed to more economically achieve a desired longitudinal and diametrical pipe stiffness. Most of these products are covered by national standards. Table D1.1, which lists standards that cover principal commercial products, also identifies each product's primary application and gives the range of nominal sizes covered by the standard. As the updating of existing and the writing of new product standards is a dynamic ongoing process, the reader is advised to contact standards-issuing organizations for the latest status. The American Society for Testing and Materials (ASTM),* for example, each year updates a volume of its "Annual Book of ASTM Standards" which includes all of its current standards covering plastics piping. The Plastics Pipe Institute (PPI) publishes a periodically updated report, PPI TR-5, which includes a comprehensive listing of North American and International Standards Organization (ISO) standards on thermoplastics piping. There are also many commercially available piping appurtenances, such as identified in Table D1.2, that are fabricated from plastics but which are not covered by any national standard. In addition, some pipe and fitting manufacturers and their distributors can custom-fabricate components that may or may not be shown in product catalogs. These specials include manholes for both infrastructure and industrial applications. Fabricated fittings intended for pressure service are often reinforced by an overwrap with a glass-fiber thermosetting resin composite.

---

* NPS 60 is size designator for 60-inch pipe. Refer to Chapter A1.

Principal Uses

Thermoplastics piping is routinely used for many common pressure and nonpressure applications. Approximately 80 percent of the newly installed mains and 90 percent of the services for gas distribution are made of PE. Over 90 percent of rural water distribution mains and over 40 percent of municipal mains are made of PVC. Most of the smaller-diameter piping installed for agricultural and turf irrigation is made primarily from PE and PVC. CPVC and PEX piping are increasingly used for hot/cold water distributing piping for residential and other construction. In oil and gas production, significant quantities of PE pipe are used to convey water and well gases. Thermoplastics piping is also frequently used for commercial and industrial applications such as for conveying chilled and process waters, aqueous solutions of corrosive chemicals, slurries, foods, and substances that must remain uncontaminated by metallic ions.

More than half the tonnage of all thermoplastic pipe goes into nonpressure uses. Over 85 percent of the newly installed underground building sewer connections are made of PVC. PVC also accounts for a similar share of the sewer collection mains in sizes NPS 4 through 18 (DN 100 through 450). About 80 percent of new single-family dwellings utilize either PVC or ABS drain, waste, and vent (DWV) piping. Most drainage systems, including those for building foundations, leaching fields, agriculture, and road construction now consist of thermoplastics piping, mostly PE and PVC. And both PVC and PE are increasingly used for larger-diameter sewers, drains and culverts. One of the faster growing applications is the use of PE and PVC pipes of profile wall constructions for drainage, particulalry alongside and under roadways (see Fig. D1.1). Another is the rehabilitation of older sewers, drains, and pressure pipelines by the insertion of new PE or PVC pipes.† In one rehabilitation technology a PE or PVC pipe is deformed when

---

* Societies and associations that write standards or that offer information relating to plastics piping are listed at the end of this chapter.

† Information on the rehabilitation of existing pipelines by the insertion of new themoplastics pipes may be obtained by contacting the North American Society for Trenchless Technology. See previous footnote.

TABLE D1.1 Principal Thermoplastic Piping Standards

Piping material* and product standard†	Subject product, or abbreviated title of standard	Nominal sizes range (in)	Principal applications
ABS, PP and PVC			
ASTM D3311	DWV fittings patterns	1¼–8	Drain, waste & vent
ABS and PVC			
ASTM D2680	ABS and PVC sewer pipe of composite wall construction	4–15	Sewer & drain
ASTM F409	Accessible and replaceable tube and fittings	1¼–1½	Drain, waste & vent
ASTM F480	Thermoplastic water well casing	2–16	Water-well casing
ASTM F1499	Coextruded, composite DWV pipe	1¼–8	Drain, waste & vent
CSA B181.5	Coextruded ABS/PVC DWV pipe	1¼–6	Drain, waste & vent
ABS, PVC & CPVC			
ASTM F1488	Coextruded composite pipe	2–12	Drain, waste & vent; sewer & drain; electrical & communications conduit
ABS			
ASTM D1527	ABS Pipe, Schedules 40 and 80	⅛–12	Cold water; industrial
ASTM D2282	ABS Pipe, dimension ratio series	⅛–12	Cold water; industrial
ASTM D2468	ABS Socket fittings, Schedule 40	⅛–8	Cold water; industrial
ASTM D2661	ABS DWV pipe and fittings	1¼–6	Drain, waste & vent
ASTM D2750	ABS Utility conduit and fittings	1–6	Electrical duct
ASTM D 2751	ABS Sewer pipe and fittings	3–12	Sewer & drain
ASTM F 628	ABS Foam core DWV	1¼–6	Drain, waste & vent
CSA B181.1	ABS DWV pipe and fittings	1¼–6	Drain, waste & vent
PA			
ASTM F1733	Butt heat fusion fittings for polyamid pipe and tubing	½–48	Gas distribution
CSA B137.12	Polyamid piping systems for gas service	½–8	Gas distribution

TABLE D1.1 Principal Thermoplastic Piping Standards (*Continued*)

Piping material* and product standard†	Subject product, or abbreviated title of standard	Nominal sizes range (in)	Principal applications
PB			
ASTM D2662	PB pipe, dimension ratio series, ID base	½–6	Hot & cold water, industrial
ASTM D2666	PB tubing	½–2	Hot & cold water; industrial
ASTM D3000	PB pipe, dimension ratio series	½–6	Hot & cold water; industrial
ASTM D3309	PB tubing for hot & cold water distribution	⅛–2	Hot & cold water
ASTM F809	Larger diameter PB pipe	3–42	Hot & cold water; industrial
ASTM F845	Plastic insert fittings for PB pipe & tubing	⅜–¼	Hot & cold water; water service
ASTM F878	PB Drip irrigation tubing	½	Drip irrigation
ASTM F1380	Metal insert fittings for PB tubing	⅜–1	Hot & cold water
CSA B137.7	Pipe for cold water distribution systems	½–2½	Hot & cold water; water service
CSA B137.8	PB Piping for pressure applications	¼–2	Hot & cold water; industrial
PE, PVC & PA			
ASTM D2513	Thermoplastic gas pressure pipe and fittings	¼–24	Natural gas & LPG distribution
PE & PP			
CSA B181.3	Polyolefin drainage systems	1¼–6	Industrial
PE			
AASHTO M252	Corrugated PE drainage tubing	3–15	Subsurface drainage
AASHTO M294	Corrugated PE pipe	12–24	Subsurface drainage
API 15LE	PE line pipe	½–12	Oil and gas production; cold water
ASTM D2104	PE pipe, Schedule 40, ID based	½–6	Cold water, industrial
ASTM D2239	PE pipe, dimension ratio series, ID based	½–6	Cold water; industrial
ASTM D2447	PE Pipe, Schedules 40 & 80	½–12	Cold water; industrial
ASTM D2609	Plastic insert fittings for PE pipe	½–6	Cold water
ASTM D2683	PE fittings, socket fusion type	½–4	Cold water; natural gas; industrial
ASTM D2737	PE tubing	½–2	Cold water
ASTM D3035	PE pipe, dimension ratio series	½–6	Cold water; industrial
ASTM D3261	PE fittings, butt fusion type	½–48	Cold water; natural gas; industrial

TABLE D1.1 Principal Thermoplastic Piping Standards (*Continued*)

Piping material⁺ and product standard*	Subject product, or abbreviated title of standard	Nominal sizes range (in)	Principal applications
PE (*Continued*)			
ASTM F405	PE corrugated tubing & fittings	3–6	Drainage; leaching fields
ASTM F667	PE corrugated tubing, larger diameter	8–24	Drainage; leaching fields
ASTM F714	PE pipe, larger diameter	3–48	Cold water; sewer & drain; industrial
ASTM F771	PE pipe for irrigation	½–6	Irrigation
ASTM F810	PE pipe for drainage & waste disposal	3–6	Drainage; leaching fields
ASTM F892	PE corrugated pipe with smooth interior	4	Sewer; drain; conduit
ASTM F894	PE profile wall pipe, large diameter	18–120	Sewer; drain; industrial
ASTM F1055	PE electrofusion fittings	½–12	Water; natural gas; industrial
ASTM F1533	Deformed PE liner for pipeline rehabilitation	3–18	Rehabilitation of existing pressure & non-pressure pipelines
ASTM F1759	PE manholes for subsurface applications	—	Sewer & drain; industrial
AWWA C901	PE pipe and tubing for water service	½–3	Cold water service
AWWA C906	PE pipe for water distribution & transmission	4–63	Water distribution & transmission
CSA B137.1	PE pipe, tubing and fittings for cold water	½–6	Cold water, industrial
CSA B137.4	PE piping (pipe & tubing) for gas service	½–8	Natural gas distribution
CSA B137.4.1	Electrofusion-type PE fittings for gas service	½–8	Natural gas distribution
CSA B182.6	Profile PE pipe and fittings	4–48	Drainage; leaching fields
PE/AL/PE			
ASTM F1282	Polyethylene/Aluminum/Polyethylene composite pressure pipe	¼–1	Cold water service; industrial
CSA B137.9	Polyethylene/Aluminum/Polyethylene composite pressure piping	¼–1	Cold water service; industrial

Piping material$^+$ and product standard*	Subject product, or abbreviated title of standard	Nominal sizes range (in)	Principal applications
PEX			
ASTM F876	Cross-linked PE tubing	¼–2	Hydronic heating
ASTM F877	Cross-linked PE tubing	¼–2	Hot & cold water distributing
ASTM F1807	Metal insert fittings utilizing a copper crimp ring for cross-linked PE tubing	⅜–1	Hot & cold water
CSA B137.5	Cross-linked PE tubing systems	¼–2	Hot & cold water
PEX/AL/PEX			
ASTM F1281	Cross-linked PE/Aluminum/Cross-linked PE composite pressure pipe	¼–1	Hot & cold, hydronic heating
CSA B 137.10	Cross-linked PE/Aluminum/Cross-linked PE composite pressure piping	¼–1	Hot & cold water; hydronic heating
PP			
CSA B137.11	Polypropylene pipe and fittings for pressure applications	⅜–3	Industrial
PVC			
AASHTO M278	PVC Drainage pipe	—	Drainage
ASTM D1785	PVC Pipe, Schedules 40, 80 & 120	½–12	Cold water; industrial
ASTM D2241	PVC Pipe, Dimension Ratio Series	⅛–38	Cold water; industrial
ASTM D2466	PVC Socket fittings, Schedule 40	⅛–8	Cold water; industrial
ASTM D2467	PVC Socket fittings, Schedule 80	⅛–8	Cold water; industrial
ASTM D2665	PVC DWV Pipe & fittings	1¼–12	Drain, waste & vent
ASTM D2672	Specification for solvent cement type PVC pipe joints	⅛–12	Cold water; industrial
ASTM D2729	PVC drain pipe & fittings	2–6	Drain; leaching fields
ASTM D2949	PVC thin walled DWV pipe	3	Drain, waste & vent
ASTM D3034	PVC sewer pipe & fittings	4–15	Sewer & drain
ASTM F512	PVC conduit for buried applications	1–6	Electrical duct
ASTM F679	PVC sewer pipe & fittings, larger diameter	18–36	Sewer & drain
ASTM F758	PVC underdrain piping	4–8	Drain
ASTM F789	PVC sewer pipe, 46 psi stiffness	4–15	Sewer & drain
ASTM F794	PVC sewer pipe, ribbed wall	4–48	Sewer & drain
ASTM F891	Coextruded PVC pipe with a cellular core	2–18	Drain, waste & vent; sewer & drain

TABLE D1.1 Principal Thermoplastic Piping Standards (*Continued*)

Piping material⁺ and product standard*	Subject product, or abbreviated title of standard	Nominal sizes range (in)	Principal applications
PVC (*Continued*)			
ASTM F949	PVC sewer pipe, corrugated wall, smooth interior surface	4–10	Sewer & drain
ASTM F1336	PVC gasketed sewer fittings	4–27	Sewer & drain
ASTM F1483	Oriented PVC pipe	4–16	Water distribution & transmission
ASTM F1504	Folded PVC pipe for pipeline rehabilitation	4–15	Rehabilitation of existing sewers and conduits
ASTM F1732	PVC sewer & drain pipe containing recycled material	2–6	Sewer & drain
ASTM F1760	Coextruded PVC non-pressure pipe containing recycled material	4–15	Drain, waste & vent; sewer & drain; electrical & communications duct
ASTM F1803	PVC closed profile gravity pipe made to controlled inside diameters	18–60	Sewer & drain
AWWA C900	PVC pipe for water distribution	4–12	Water distribution
AWWA C905	PVC pipe for water distribution & transmission	14–36	Water distribution & transmission
AWWA C907	PVC gasketed fittings for water	4–8	Water distribution
CSA B137.2	PVC gasketed fittings for water	4–12	Water distribution
CSA B 137.3	PVC pipe for pressure applications	⅛–48	Cold water, industrial
CSA B181.2	PVC DWV pipe and fittings	1¼–24	Drain, waste & vent
CSA B182.1	Drain and sewer pipe and fittings	2–6	Drain & sewer piping
CSA B182.2	PVC sewer pipe and fittings	3–48	Sewer collection
CSA B182.4	Profile wall PVC sewer pipe and fittings	4–48	Sewer collection
CSA B182.7	Multilayer PVC sewer pipe having reprocessed-recycled content	4–48	Sewer collection
CSA B196.3	PVC underground telecommunications cable ducting and fittings	2½–4	Communications ducting

TABLE D1.1 Principal Thermoplastic Piping Standards (*Continued*)

Piping material⁺ and product standard*	Subject product, or abbreviated title of standard	Nominal sizes range (in)	Principal applications
NEMA TC-2	PVC electrical conduit	½–6	Electrical conduit
NEMA TC-3	PVC conduit fittings	½–6	Electrical conduit
UL 514	PVC electrical outlet boxes and fittings	½–6	Electrical conduit
UL 651	PVC rigid non-metallic conduit	½–6	Electrical conduit
CPVC			
ASTM D2846	CPVC hot & cold water piping	⅜–2	Hot & cold water
ASTM F437	CPVC fittings, threaded, Schedule 80	¼–6	Hot & cold water, industrial
ASTM F438	CPVC fittings, socket, Schedule 40	¼–6	Hot & cold water, industrial
ASTM F439	CPVC fittings, socket, Schedule 80	¼–6	Hot & cold water, industrial
ASTM F441	CPVC pipe, Schedules 40 and 80	¼–12	Hot & cold water, industrial
ASTM F442	CPVC pipe, dimension ratio series	¼–12	Hot & cold water, industrial
CSA B137.6	CPVC pipe, tubing and fittings for hot & cold water distributing systems	⅜–2	Hot & cold water, plumbing
PVDF			
ASTM F1673	PVDF corrosive waste drainage piping	1¼–12	Industrial

* Materials: ABS—Acrylonitrile-butadiene-styrene, CPVC—Chlorinated polyvinyl chloride, PA—Polyamide (Nylon), PB—Polybutylene, PE—Polyethylene, PEX—Cross-linked polyethylene, PE/AL/PE—Polyethylene/aluminum/polyethylene composite, PEX/AL/PEX—Cross-linked polyethylene/aluminum/cross-linked polyethylene composite, PP—Polypropylene, PVC—Polyvinyl Chloride, PVDF—Polyvinylidene Fluoride.

† Issuing organizations:

AASHTO (American Association of State Highway and Transportation Officials, Room 341, National Press Building, Washington, DC 20045.

API (American Petroleum Institute), Publications and Distribution Section, 1200 L Street, N.W., Washington, DC 20005.

ASTM (American Society for Testing and Materials), 100 Barr Harbor Drive, West Conshohocken, PA 19428.

CSA (Canadian Standards Association), 178 Resdale, Blvd., Etobicoke, Toronto, Ontario, Canada M9W 1R3.

NEMA (National Electrical Manufacturer's Association), 2101 L Street, N.W., Suite 300 Washington, DC 20038.

UL (Underwriter's Laboratories, Inc.), 333 Pfingsten Road, Northbrook, IL 60062.

A current listing of North American plastic piping standards is available in PPI Technical Report TR-5, *Standards for Plastics Piping*, Plastics Pipe Institute, 1801 K Street, N.W., Suite 600K, Washington, DC 20006.

TABLE D1.2 Size Range of Readily Available Thermoplastic Valves and Other Appurtenances (nominal pipe sizes expressed in inches)

Item	PVC	CPVC	PE	PP	PVDF
Valves					
Needle	¼–½	¼–½	—	—	—
Ball	¼–6	¼—4	—	¼–4	¼–6
Gate	½–6	½–6	—	—	—
Butterfly	4–24	—	—	—	—
Check	¼–16	½–4	—	½–4	½–4
Globe	⅛–4	—	—	—	—
Diaphragm	½–10	½–10	—	—	½–6
Foot	½–4	½–4	—	½	—
Solenoid	⅛–3	⅛–3	—	—	—
Gas service	—	—	¼–6	—	—
Strainers	⅛–3	⅛–3	—	—	—
Saddles, tapping	2–8	2–12	—	—	—
Expansion joints	½–12	½–6	—	½–4	½–4
Flange adapters	2–12	2–12	2–42	2–6	2–6

manufactured into a "U" shape approximately one-half the diameter of the host pipe. At the installation site, the "U" deformed pipe is pulled through the damaged host pipe and then reformed by a combination of heat and pressure to tightly fit the shape of the host pipe (see Fig. D1.2).

Advantages and Limitations

A number of important performance advantages have sparked the widespread adoption of thermoplastics piping for so many pressure and nonpressure uses. The most universally recognized advantage is the piping's virtual freedom from attack by ambient water and moisture. Thermoplastics piping is not subject to surface attacks in any way comparable to the rusting or environmental corrosion of metals. Thermoplastics, being nonconductors, are immune to the electrochemical-based

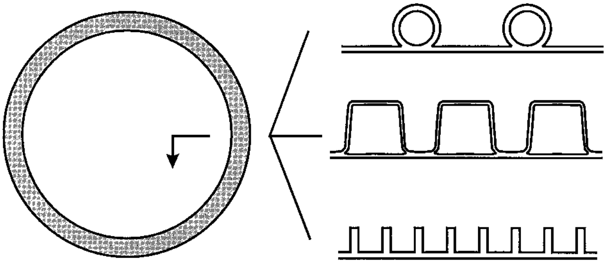

Note - Other corrugation profiles are available

FIGURE D1.1 Examples of plastic pipe wall cross sections.

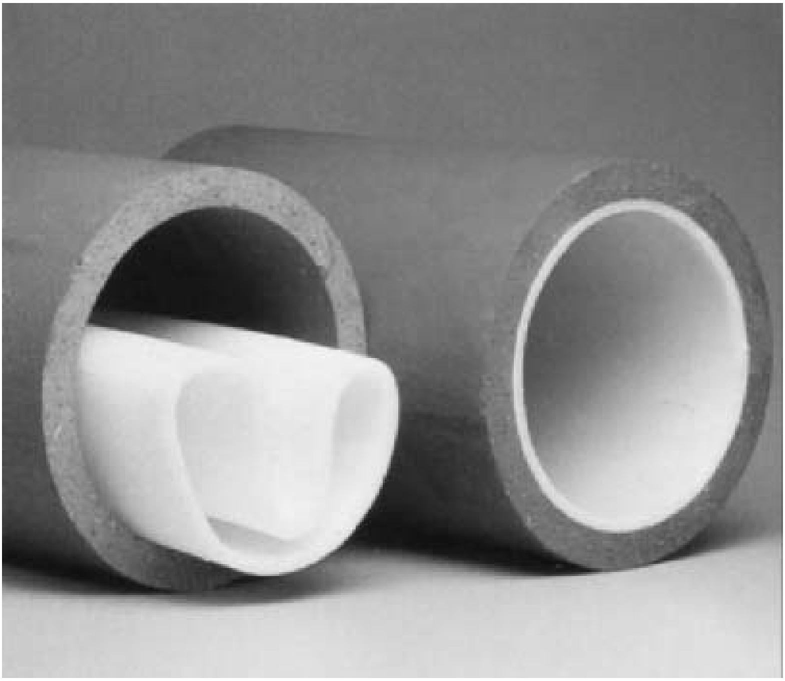

FIGURE D1.2 Deformed and reformed polyethylene liner pipe.

corrosion process induced by electrolytes such as acids, bases, and salts. In addition, plastics pipe materials are not vulnerable to biological attack. In sum, thermoplastics are not subject to corrosion in most environments in both aboveground and underground service. This has resulted in negligible costs for maintenance and external protection such as painting, plastic coating, galvanizing, electroplating, wrapping, and cathodic protection.

Another principal advantage offered by thermoplastics is their lower specific gravity, which results in ease of handling, storage, and installation, as well as in lower transportation costs. The smooth pipe surfaces yield low friction factors and very low tendency to fouling. They also offer very good abrasion resistance, even when conveying slurries that can rapidly abrade harder materials.

High deformation capacity without fracture—or *strainability* (Janson[4])—is another important performance feature, particularly for underground service. In response to earth loading, buried flexible pipes deform (deflect) and thereby activate additional and substantial support from the surrounding soil. This capability to activate additional support by deformation results in a pipe-soil structure that is capable of supporting earth fills and surface live loads of a magnitude that could fracture stronger but less strainable materials.

Thermoplastics piping, particularly in the sizes under around NPS 18 (DN 450), can be competitive in cost to piping of other materials. In the larger sizes, thermoplastics will oftentimes overcome a first-cost disadvantage when consideration is given to their lower operating and maintenance costs and longer life.

The principal limitations of thermoplastics arise from their relatively low strength and stiffness and greater sensitivity of mechanical properties to temperature. As a result, their primary use is for gravity and lower-pressure applications at near-ambient temperatures. Some plastics qualify for hot water service, and there are some specialty materials that can be used to close to 300°F (149°C). Notwithstanding these restrictions, thermoplastics piping satisfies the performance requirements for a very broad range of applications.

Successful design with thermoplastics requires recognition of their viscoelastic nature. These materials do not exhibit the relatively simple stress/strain relationship that is characteristic of metals. Duration of loading, as well as temperature and environment, can have a profound effect on their stress-strain response, rupture strength, ultimate strain capacity, and other engineering properties. The extent to which duration of loading, temperature, and environment influence ultimate mechanical properties varies not only from one class of thermoplastic material to another (for example, between PVC and PE) but can also significantly differ within the same generic material, depending on the specific nature of the polymer (e.g., molecular weight, molecular weight distribution, degree of branching, and extent of copolymerization with other monomers), the type and quantity of polymer additives and modifiers, and the processing conditions. These factors must be recognized when characterizing the engineering properties of thermoplastic piping, particularly when defining allowable stress, strain, and upper temperature limits; and it goes without saying that for effective design and installation, they must be given consideration by the piping specifier, designer, and user.

Compared to traditional piping materials, thermoplastics have high coefficients of thermal expansion and contraction. For example, the thermal expansion rate can be from 6 to 10 times greater than that of metal pipe. This must be recognized both in design and installation, particularly for aboveground applications where resultant piping reaction may require frequent use of expansion loops or pipe supports. For aboveground piping more attention may also need to be given to proper pipe restraint because the low mass of thermoplastics provides less inertia against piping movements that may be induced by sudden changes in the fluid flow velocity. Additionally, aboveground thermoplastics should be positioned or protected against possible accidental mechanical damage.

Since thermoplastics are combustible, their use in certain locations may be limited by fire safety concerns and regulations. Construction and building codes address these concerns through various requirements, including the placing of thermoplastics piping inside suitable fire-resistant walls and chases and the use of fire stops when pipe penetrates through such structures.

THERMOPLASTIC PIPING MATERIALS

The term *polymer* (from the Greek *poly,* meaning ‘‘many,’’ and *mer* meaning ‘‘unit’’) is used to denote the long-chain or network structure of macromolecules that are produced either naturally or that are made by man. The latter are referred to as *synthetic polymers.* Polymers which are the base material for plastics are oftentimes termed *resins.* Plastics are compounds of *resins* and *additives.* As previously explained, plastics are divided into two broad categories, *thermoplastics* and *thermosets.* Since thermoplastics are capable of being softened by heating and hardened by cooling, they can be shaped into articles by operations such as molding or extrusion, which take advantage of this capability.

Additives are incorporated into a thermoplastics composition to achieve specific purposes during fabrication or service. The precise nature and amounts of these additives depends on the plastic and its inherent properties; the processing method used to convert it to a finished article; and any desired modification of properties to achieve certain aesthetic, performance, or economic objectives. The main kinds of additives that may be used in thermoplastic piping compositions include the following:

Heat stabilizers. To protect the plastic against thermal degradation, particularly during processing

Antioxidants. To protect against oxidation during processing and when in service

Ultraviolet screens, or stabilizers. To protect against ultraviolet radiation in sunlight during outdoor storage and weather-exposed service

Lubricants. To facilitate and improve fabrication by reducing viscosity and lessening frictional drag through dies and other surfaces

Pigments. To give the product a distinctive color

Processing aids. To facilitate material mixing and fusion during processing and thereby optimize the homogenization of material and its properties

Property modifiers. To enhance a particular property such as impact strength or flexibility

Fillers. Most often used to reduce volume cost; however, fillers may also be used to increase stiffness or to modify processing characteristics

Additives are essential components of most thermoplastic piping compositions. They facilitate processing, enhance certain properties, give a product a distinctive appearance and color, and provide required protection during fabrication and service. There are only a few thermoplastics [e.g., certain fluorinated polymers such as polyvinylidene fluoride (PVDF)] that do not require the incorporation of some type of additive because they already have sufficient natural thermal stability and aging and weathering resistance.

The precise nature and quantities of additives that can be used for piping compositions are delimited by their effect on engineering properties, such as rigidity, impact strength, chemical resistance, creep resistance, rupture strength under long-term loading, and fatigue endurance. For example, the use of an inorganic filler can compromise the natural resistance of polymers to very strong acids or bases. Also, too much filler, or use of a filler of a coarser grade, or its inadeqate dispersion can introduce physical discontinuities, or internal faults, that can compromise long-term strength, ductility, toughness, and fatigue endurance. Another example is the excessive use of liquid stabilizers or lubricants, which tends to plasticize the plastic and thereby make it less creep-resistant and more sensitive to temperature.

Additionally, the properties of the base polymer used in a plastics piping composition are not only determined by the chemical elements, or atoms, from which the polymer is made, but are also profoundly influenced by the specific geometrical arrangement by which the polymer's atoms are combined to form a macromolecule. A most important molecular structural parameter is the length of the molecular chain. The longer the chain, the larger and heavier the molecule. Polymers used for engineering applications consist of relatively long molecules in order to yield satisfactory levels of longer-term strength, ductility, and toughness.

Molecule size is denoted by *molecular weight,* which is the sum of the atomic masses of all the elements in the molecule. Since all the molecules in a polymer are not of the same size, the degree of polymerization is usually expressed by the polymer's *average* molecular weight. The nature of the distribution of molecular sizes also bears a significant influence on a number of physical and mechanical properties. Thermoplastics used for piping applications tend to be of relatively high molecular weight (generally over 100,000) and of relatively narrow molecular weight distribution. However, the molecular weight cannot be so large as to result in a melt viscosity so high as to hinder proper fabrication of the end product.

Another molecular structural parameter is the *length and frequency of shorter molecular chains* that occasionally branch out from the main polymer chain. These branches help determine how closely the polymer molecules can lie next to each other, which has an influence on the polymer's physical and mechanical properties. The length and frequency of polymer branches may be controlled by conditions of chemical reaction, catalysts used, and by the copolymerization with other than the principal monomer. For example, polyethylene pipe polymers are in fact copolymers of ethylene with small amounts of other olefin monomers such as propylene, butene, pentene, and hexene. Although the amount of other monomers used is low, and thereby the polymer still falls under the classification of polyethylene, it is enough to modify the polymer's molecular structure—principally the number of short branches along the linear molecular chains—and thereby exert significant influence on engineering prperties. Many commercial polymers, including polypropylene (PP) and polybutylene (PB), are also partial copolymers.

Chemical geometry, sometimes referred to as *polymer architecture,* also helps determine the relative physical arrangement of molecules to one another and, thereby, the polymer's physical properties. Generally, the long molecules in polymers tend to align themselves near each other in a random symmetry analogous to spaghetti in a bowl. This random arrangement is referred to as the *amorphous state.* The proximity of polymer molecules to one another and their physical entanglement gives rise to mechanical forces that greatly account for a polymer's mechanical properties. PVC and ABS are polymers that are essentially amorphous materials.

Certain other polymers, such as PE, PP, PB, and PVDF, are partly crystalline materials. Portions of their polymer chains organize themselves in close and very well ordered arrangements called *crystallites;* other portions lie in the amorphous regions. The stronger physical bonds in the well-ordered, closely packed crystalline regions have significant influence over mechanical properties such as strength, stiffness, and toughness. The extent of crystallization and the size and nature of the crystalline regions, as well as the nature of the interconnective network of molecules running from one crystalline region to another can all be somewhat controlled by tailoring molecular architecture.

The many possible variations in polymer structure, combined with the different types and amounts of additives that can be used, result in a great diversity of plastic compositions, even within a particular polymer group such as polyvinyl chloride (PVC) or polyethylene (PE). The defining and classifying of such compositions is, understandably, not a simple task. The primary standard plastic material specifications are issued by the American Society for Testing and Materials (ASTM). The first ASTM standards classified plastic materials by a "Type, Grade, and Class" system in accordance with three key properties. However, with the growing need to better define plastic materials by more than just three properties, a number of ASTM standards have adopted a cell classification system whereby each of a number of primary properties is given a property cell number depending on the property value. All the resultant property cell numbers (there can be as many as needed) are then listed in a specified order. For example, referring to Table D1.3, in accor-

TABLE D1.3 Primary Properties: Cell classification Limits for PE Piping Materials in Accordance with ASTM D 3350

Property and test method (Note 1)	Property cell limits									
	Cell 0	Cell 1	Cell 2	Cell 3	Cell 4	Cell 5	Cell 6	Cell 7	Cell 8	Cell 9
1. Density ASTM D1505 (g/cc)	Not specified	0.910 to 0.925	0.926 to 0.940	0.941 to 0.955	> 0.955					Specify value
2. Melt index ASTM D1238 (g/10 min)	Not specified	>1.0	0.4 to 1.0	.015 to 0.4	<0.15	(Note 2)	(Note 3)			Specify value
3. Flexural modulus ASTM D790 (psi)	Not specified	< 20.000	20,000 to 40,000	40,000 to 80,000	80,000 to 110,000	110,000 to 160,000	> 160,000			Specify value
4. Yield strength ASTM D638 (psi)	Not specified	< 2,200	2,200 to 2,600	2,600 to 3,000	3,000 to 3,500	3,500 to 4,000	>4,000			Specify value
5. Environmental stress crack resistance	Not specified									Specify value
—Method A ASTM F1473 (min. hrs) (Note 4)						0.15	3	10	30	
—Method B ASTM D1693										
Test condition		A	B	C	C					
Test duration (hrs)		48	24	192	600					
Failure, max (%)		50	50	20	20					
6. Hydrostatic design basis, ASTM D2837 (hrs)	Not specified (Note 5)	800	1,000	1,250	1,600					Specify value

Notes:

(1) To convert psi to Mpa, multiply by 6.90 × 10^{-3}.

(2) Materials with MI less than Cell 4 but which have a flow rate of <4.0 g/10 min when tested in accordance with D1238, Condition F.

(3) Materials with MI less than Cell 4 but which have flow rate of <0.30 g/10 min when tested in accordance with ASTM D 1238, but at a temperature of 590°F (310°C) and under a total load of 12,480 g).

(4) Test is conducted on compression molded samples, notched to a depth in accordance with Table 1 of F1473, at a load of 350 psi (2.4 Mpa) and at a temperature of 176°F (80°C).

(5) Compositions for which an HDB has not been established are designated as NPR (non-pressure rated).

dance with the cell classification system of ASTM D3350, "Standard Specification for Polyethylene Plastics Pipe and Fitting Materials," Class 234424 polyethylene designates a material with properties that fall within the following range of values:

Property	*Requirement*
Density:	Cell 2 of property 1 [0.926 to 0.940 g/cm^3]
Melt index:	Cell 3 of property 2 [<0.4 to 0.15 g/10 min]
Flexural modulus:	Cell 4 of property 3 [80,000 to <110,000 psi, 550 to 760 MPa]
Tensile strength at yield:	Cell 4 of property 4 [3000 to <3500 psi, 21 to <24 MPa]
Resistance to slow crack growth:	Cell 2 of property 5 [50 percent max failure after 24 hrs, when using test method B, Condition C]
Hydrostatic design basis at 23°C:	Cell 4 of property 6 [1600 psi or 11 MPa]

Although this newer cell-type format is a major improvement in classifying and specifying piping materials by a broader array of significant property and performance characteristics, it may not always be a sufficiently definitive predictor of longer-term performance properties. The manufacturer may have to be consulted for further information. For example, two PE materials with the same ASTM material cell classification may have a strength under long-term loading that responds somewhat differently to increasing temperature, or to fatigue loading, or to chemical environments.

A brief description of the major materials used for thermoplastics piping follows. The principal standard piping products made from these materials, and their applications, are identified in Table D1.1. Nonstandard or specialty piping products are also offered from these materials.

Polyvinyl Chloride (PVC)

In its virgin state PVC is a translucent, colorless, rigid polymer. When PVC was first commercialized it was softened by the addition of plasticizers, and the resultant compositions were primarily used in the manufacture of such items as luggage, upholstery, garden hose, wire coating, floor tiles, and laboratory tubing. Subsequent advances in extrusion and molding equipment, and in the availability of more effective stabilizer and lubrication additives, allowed for the extrusion of the much more viscous, rigid compositions which are the only ones suitable for piping. To differentiate these newer unplasticized compositions from the early plasticized versions they were identified as *uPVC,* or *rigid PVC.* These designations are still often used.

Of the commonly available thermoplastics, rigid PVC offers the highest strength and stiffness at the least volume cost, which accounts for its having become the leading plastic material for both pressure and nonpressure piping. Major uses include water mains; irrigation; drain, waste, and vent (DWV); sewage and drainage; well casing; electric conduit; and power and communications ducting. PVC is available in a much broader range of pipe sizes and wall thicknesses, fittings, valves, and appurtenances than in any other plastic.

PVC piping is joined primarily by two techniques, *solvent cementing* and *elastomeric seals.* Although it can be joined by thermal fusion, its melt viscosity is too high for making reliably strong joints under field conditions.

PVC piping is made only from rigid compounds containing no plasticizers and relatively small quantities of other ingredients. To minimize adverse effects on long-term strength and chemical resistance, minimal quantities of additives are used in pressure pipe compounds. To improve impact strength for conduit and other applications that may be subject to mechanical abuse, small quantities of solid polymeric impact modifiers (but not plasticizers, which are generally liquids) are sometimes incorporated into the composition. When improved stiffness is desired, filler—generally very finely divided calcium carbonate—is added. Combinations of these and other additives can be used to optimize a rigid PVC composition for its intended application. The enhancement of a particular property by the use of additives may often require a trade-off with some other property.

For the defining of rigid PVC compositions based on resultant properties, ASTM has established two material specifications based on the property cell classification system. One of these is ASTM D1784, ''Standard Specification for Rigid Poly(Vinyl Chloride) and Chlorinated Poly(Vinyl Chloride) Compounds,'' which classifies PVC materials in accordance with the nature of the polymer and four primary properties.

TABLE D1.4 Primary Properties: Cell Classification Limits for PVC Materials in Accordance with ASTM D 1784

Property and test method[2]	Property cell limits[1]								
	Cell 0	Cell 1	Cell 2	Cell 3	Cell 4	Cell 5	Cell 6	Cell 7	Cell 8
1. Base resin	Unspecified	Poly (vinyl) homopolymer	Chlorinated poly(vinyl) chloride	Vinyl copolymer					
2. Min. impact strength (Izod) (ft-lb/in of notch) ASTM D256	Unspecified	<0.65	0.65	1.5	5.0	10.0	15.0		
3. Tensile strength, min. (psi) ASTM D638	Unspecified	<5,000	5,000	6,000	7,000	8,000			
4. Modulus of elasticity, min. (psi) ASTM D638	Unspecified	<280,000	280,000	320,000	360,000 0	400,000 0	440,000 0		
5. Deflection temperature under load (264 psi), min. (°F) [°C]	Unspecified	<131 [55]	131 [55]	140 [60]	158 [70]	176 [80]	194 [90]	212 [100]	230 [110]
Flamability	(3)	(3)	(3)	(3)	(3)	(3)	(3)	(3)	(3)

Notes:

(1) The minimum property value determines the cell number, even though the maximum measured value may fall within a higher cell

(2) Conversion factors to common metric units are as follows:

- psi to Mpa—multiply by 6.90×10^{-3}
- ft-lb/in of notch to J/m of notch—multiply by 53.4

(3) All compounds covered by this specification when tested in accordance with ASTM method D635 shall yield not less than the following result: average extent of burning <25 mm; average time of burning <10 s.

These four primary properties and the cell class ranges established for each are presented in Table D1.4 The requirements for a fifth property, chemical resistance, are presented in Table D1.5 The manner in which a rigid PVC material is identified by this classification system is illustrated by a Class 12454-B PVC material which, according to Tables D1.4 and D1.5, would have to meet the following property requirements:

Property	*Requirement*
Base resin:	Cell 1 of property 1 [poly(vinylchloride) homopolymer]
Impact strength (Izod):	Cell 2 of property 2 [0.65 ft-lbf/in, minimum, 0.035 N-m/mm]
Tensile strength:	Cell 4 of property 3 [7,000 psi, minimum or 48 MPa]
Modulus of elasticity in tension:	Cell 5 of property 4 [400,000 psi, or 2.8 GPa minimum]
Deflection temperature under load:	Cell 4 of property 5 [158°F (70°C), minimum]
Chemical resistance:	Must meet the minimum requirements listed under Suffix B of Table D1.5

Most PVC pressure pipe is made from materials that meet the minimum requirements of cell 12454-C, which, to maximize long-term strength, generally is formu-

TABLE D1.5 PVC Compositions, Suffix Designation for Chemical Resistance

Test solution	Suffix A	Suffix B	Suffix C	Suffix D
H_2SO_4 (93%)—14 days immersion at 55 ± 2°C				
Change in weight:				
Increase, max., %	1.0*	5.0*	25.0	NA⁺
Decrease, max., %	0.1*	0.1*	0.1	NA
Change in flexural yield strength:				
Increase, max., %	5.0*	5.0*	5.0	NA
Decrease, max., %	5.0*	25.0*	50.0	NA
H_2SO_4 (80%)—30 days immersion at 60 ± 2°C				
Change in weight:				
Increase, max., %	NA	NA	5.0	15.0
Decrease, max., %	NA	NA	5.0	0.1
Change in flexural yield strength				
Increase, max., %	NA	NA	15.0	25.0
Decrease, max., %	NA	NA	15.0	25.0
ASTM Oil No. 3—30 days immersion at 23°C				
Change in weight:				
Increase, max., %	0.5	1.0	1.0	10.0
Decrease, max., %	0.5	1.0	1.0	0.1

* Specimens washed in running water and dried by air blast or other mechanical means shall show no sweating within 2 hours after removal from the acid bath.

⁺ NA—Not applicable

lated with minimal quantities of processing additives and property modifiers. An older ''Type and Grade'' system found in earlier versions of D1784, although technically obsolete, continues to be referenced by a number of piping standards. The newer issues of D1784 include a table (see Table D1.6) that cross-references the former with the new designations.

For pressure pipe applications, the cell classification system of ASTM D1784 is often complemented by one additional material requirement. All PVC pressure

TABLE D1.6 Classification of commercial Types and Grades of Rigid Polyvinyl Chloride Piping Materials: Comparison of former to Newer Designations

Type and grade designation based on older edition of ASTM D 1784	Corresponding cell classification based on current edition of ASTM D1784 (See Tables D 1.4 & D 1.5)
Rigid PVC materials	
Type I, Grade 1	12454-B
Type I, Grade 2	12454-C
Type I, Grade 3	11443-B
Type II, Grade 1	14333-D
Type III, Grade 1	13233
CPVC materials	
Type IV, Grade 1	23447-B

pipe standards require that the pipe be made from a formulation with a specified minimum long-term strength that has been established in accordance with ASTM D2837, ''Standard Method for Obtaining the Hydrostatic Design Basis for Thermoplastic Pipe Materials.'' Standards for products intended for the transport of potable water also require that the material meet certain minimum chemical extraction requirements designed to protect water quality. (See discussion in ''Effects of Fluids Being Conveyed.'')

Most ASTM and a number of other PVC pressure pipe standards identify PVC stress-rated materials by a four-digit number, of which the first two digits designate its type and grade in accordance with the older editions of ASTM D1784 (see Table D1.6) and the last two identify, in hundreds of pounds per square inch, the material's maximum recommended hydrostatic design stress (HDS) for water at 73.4°F (23°C). In accordance with ASTM convention, the maximum HDS is one-half the material's hydrostatic design basis (HDB), which refers to the material's long-term hydrostatic strength (LTHS) category when established in accordance with ASTM D2837. The following list describes the most common PVC stress-rated materials covered by this designation system:

- PVC 1120 is a Type 1, Grade 1 PVC material (minimum cell class 12454-B) with a maximum recommended HDS of 2,000 psi (13.8 MPa) for water at 73.4°F (23°C).
- PVC 2110 is a Type 2, Grade 1 PVC material (minimum cell class 14333-D) with a maximum recommended HDS of 1,000 psi (6.9 MPa).
- PVC 2116 is a Type 2, Grade 1 PVC material (same minimum cell class as above) with a maximum recommended HDS of 1,600 psi (11 MPa).

Since by the ASTM convention the maximum recommended HDS is one-half the material's HDB, it follows that the HDBs for these materials are 4,000 psi (27.6 MPa), 2,000 psi (13.8 MPa), and 3,200 psi (22.1 MPa), respectively.

The Plastics Pipe Institute (PPI) lists a generic PVC 1120 formulation that provides for certain specified alternative choices of ingredients and formulation quantities that have been determined to allow the formulated compounds to satisfy both the short- and long-term requirements established for this material classification. This formulation, which is listed in PPI TR-3, ''Policies and Procedures for Developing Recommended Hydrostatic Strengths and Design Stresses for Thermoplastic Pipe Materials,'' is periodically updated to include any new alternate choices of ingredients that have been validated by means of both short-term and long-term tests.

The other PVC material specification is ASTM D4396, ''Standard Specification for Rigid Polyvinyl Chloride (PVC) and Related Plastic Compounds for Non-Pressure Piping Products'' As indicated by its title, this specification covers compounds only intended for nonpressure uses. It is similar to D1784 in that it is also based on the cell format and most of the same primary classification properties.

Chlorinated Polyvinyl Chloride (CPVC)

As implied by its name, CPVC is a chemical modification of PVC. It is very similar to PVC in many properties, including strength and stiffness at ambient temperature. But the extra chlorine in CPVC's chemical structure increases this material's maximum operating temperature limit by about 50°F (28°C) above that for PVC. Thus, CPVC can be used up to nearly 200°F (93°C) for pressure uses and up to about

210°F (100°C) for nonpressure applications. Principal uses for CPVC are domestic hot water and cold water piping, residential fire-sprinkling piping, and many industrial applications which can take advantage of its elevated-temperature capabilities and superior chemical resistance.

CPVC materials are also classified by the previously discussed ASTM D1784. Similar to PVC, most CPVC standards that cover pressure-rated products identify stress-rated materials by a four-digit number that combines the older type and grade designation with the material's maximum recommended HDS for water at 73.4°F (23°C). Currently, the only recognized stress-rated CPVC designation is CPVC 4120, signifying a Type IV, Grade 1 material in accordance with D1784 (see Table D1.6), with a maximum recommended hydrostatic design stress of 2,000 psi (13.8 MPa) for water at 73.4°F (23°C) in accordance with ASTM D2837. In addition, most CPVC pipe standards that cover products intended for elevated-temperature service, such as for hot water piping, require that the CPVC material have no less than a recommended HDS of 500 psi (3.5 MPa) (equivalent to an HDB of 1,000 psi or 6.9 MPa) for water at 180°F (82°C).

Polyethylene (PE)

Polyethylene (PE) is possibly the best-known member of the polyolefin family (materials derived from the polymerization of olefin gases including ethylene, propylene, and butylene) because it has penetrated so widely into everyday household uses. PE in its virgin form is a translucent and tough substance with a waxlike feel and appearance. As is the case of the other polyolefins, PE is a partly crystalline and partly amorphous material. The extent to which it crystallizes (which determines many of its resultant properties) is a function of its molecular structure. PE's backbone consists of a long molecular chain, from which short-chain branches occasionally project. The length, type, and frequency of distribution of these branches, as well as other parameters such as molecular weight and molecular weight distribution, determine the degree of crystallinity and the network of molecules that anchor the crystal-like regions to one another. These structural characteristics greatly influence the short- and long-term mechanical properties of PE. The extent to which crystalline regions can form in a PE polymer is reflected by its density—the higher-density materials have more crystalline regions, which results in greater stiffness and tensile strength. However, as the crystallinity increases, there is some accompanying loss in ductility and toughness.

Polyethylene polymers used for piping are classified into three types: a low-density, relatively flexible form; a medium-density, somewhat stiffer and less-flexible form; and a high-density form, which is more rigid and stronger. Most pressure pipe is made of materials of densities lying around the high end of the medium-density PEs and the lower end of the high-density materials. This range has established itself as offering the best balance of toughness, flexibility, and long-term strength. Nonpressure pipe is primarily made from the more rigid, higher-density materials.

PE, which is somewhat less strong and less rigid than PVC at ambient temperature, is the second most used plastic pipe material, primarily because of its toughness, ductility, and flexibility, even at low temperatures. PE pipes do not fracture under the expansive action of freezing water. In an emergency, smaller-diameter PE pipes can be safely "squeezed-off" (clamped tightly) by suitable procedures, to shut down the flow of fluids. Also, PE pipe is much less prone to failure by a rapidly running crack. These two last-named characteristics are important reasons why PE pipe is now used in over 85 percent of all current new installations of piping for gas distribution.

PE pipes also have superior fatigue endurance. This feature, plus their ability to dampen water hammer shock, has led to their use for applications such as in sewer force mains, where repeated cyclic pressure changes tend to occur.

The high strainability and fracture resistance of PE have led to its selection for use in unstable soils and situations where axial bending and diametrical deflection are anticipated. Example installations that utilize this feature are methane collection systems for solid-waste sites, pipes installed by directional trenchless boring techniques, lake and river crossings, and outfall pipes discharging treated effluent into seas and oceans.

PE pipe is also used for the rehabilitation of old pipelines. Lengths of PE pipe which have been joined to the required length by the butt-fusion method are pulled, or sometimes pushed, inside the old line. New rehabilitation procedures have evolved by which, for ease of insertion, the diameter of the liner PE pipe is reduced by a squeeze-down procedure, or by folding the pipe into a U-shape. Once inside the old pipe, the strain memory in the material is relieved by a combination of heating and internal pressure, allowing the PE pipe to reround so that it fits snugly inside the existing pipe (see Fig. D1.2).

The low stiffness of PE permits the coiling of smaller-diameter pipe [generally up to about 4 in (100 mm) although pipe up to NPS 6 (DN 150) diameter has been coiled for special jobs]. The coiled length can be hundreds of feet and sometimes over a thousand feet (300 meters) long, depending on material, wall thickness, and diameter. PE pipe is readily heat-fusible and can be joined to itself or to fittings by the butt-fusion process. PE fittings are also available for joining pipe by the socket fusion and electrofusion processes.

For nonpressure buried pipe applications, such as for stormwater, roadway, and land drainage, various designs of profile wall constructions have been developed which enhance pipe wall stiffness while minimizing material usage (see Figure D1.1). Because of their corrosion resistance, these pipes are displacing metallic drainage piping.

To protect the PE polymer during processing, storage, and service, PE piping compounds contain small quantities of heat stabilizers, antioxidants, and ultraviolet (UV) screens or UV chemical stabilizers. Black PE pipe materials incorporate very finely divided carbon black as both a coloring pigment and to screen the polymer against the potentially damaging UV radiation in sunlight. Nonblack piping compositions include a UV chemical stabilizer in addition to a coloring pigment (usually tan or yellow for gas, blue for water, and orange for communications ducting).

The primary specification for identifying and classifying PE piping materials is ASTM D3350, ‘‘Standard Specification for Polyethylene Pipe and Fittings Materials.’’ Standard D3350 employs the cell class format to cover the diversity of materials used for piping. As shown by Table D1.3, this specification classifies PE materials by a matrix of six primary properties and a specified range of cell values for each of these properties. In addition, an ending code letter is used to designate the incorporation of a colorant and UV stabilizer. An example of how PE materials are identified by this system was illustrated under the discussion ‘‘Thermoplastics Piping Materials.’’

A recent addition to ASTM D3350 is a new test for the classifying of PE’s resistance to crack growth under sustained tensile loading. The test method used for this purpose is ASTM F1473, ‘‘Notch Tensile Test to Measure the Resistance to Slow Crack Growth of Polyethylene Pipe and Resins.’’ Results obtained under this method have been determined to give a more reliable index than the traditional

TABLE D1.7 Classification of Commercial Polyethylene Piping Materials: Comparison of Former to Newer Designations

PE material designation based on type and grade in accordance with former ASTM D1248, plus a code for material's maximum recommended hydrostatic design stress for water, for 73°F	Corresponding minimum cell classification in accordance with cell classification system of ASTM D3350*
PE 2406	PE 213333
PE 3406	PE 324433
PE 3408	PE 334434

* For cells 1 and 6 the resultant values must fall within the limits shown for the particular property cell. For the other properties, material values may fall within or be above the designated cell limits. Refer to Table D 1.3 for the listing of range of property values for each property cell.

stress-crack method (ASTM D 1693) of a PE material's resistance to crack formation and growth when subject to sustained localized intensified stressing, such as can occur in piping applications. A similar method, as follows, which was developed for geomembranes, is also being used to rank the slow-crack growth resistance of PE materials that are intended for nonpressure applications: ASTM D5397, ''Standard Test Method for Evaluation of Stress Crack Resistance of Polyolefin Geomembranes Using Notched Constant Tensile Load Test.''

Prior to the issuance of ASTM D 3350, most PE piping standards referred to ASTM D1248, ''Standard Specification for Polyethylene Plastics Molding and Extrusion Materials,'' for the defining of material requirements. ASTM D1248 classified PE by type, representing the material's density category, and grade, reflecting a combination of properties, primarily the melt flow or processing characteristics. Similar to PVC, PE piping standards classify PE stress-rated materials by means of a four-digit number, of which the first two digits refer to the older type and grade designation and the last two represent, in hundreds of pounds per square inch, the material's maximum recommended hydrostatic design stress (HDS) for water at 73.4°F (23°C). The following list describes the commonly used PE piping materials in accordance with this traditional designation system:

- PE 2406 is a Type 2 (i.e., medium-density), Grade 4 PE material, in accordance with ASTM D1248, which carries a recommended maximum hydrostatic design stress of 630 psi (4.3 MPa), for water at 73.4°F (23°C). [The ''06'' in the 2406 designates the 630 psi (4.3 MPa) design stress.]
- PE 3408 is a Type 3 (i.e., high-density), Grade 4 PE material, in accordance with ASTM D1248, which carries a recommended maximum hydrostatic design stress of 800 psi (5.5 MPa) for water at 73.4°F (23°C).

To relate this older designation system to the newer cell system of D 3350, the latter standard includes a cross-reference. The crossovers recognized by the 1993 edition of D 3350 are presented in Table D1.7.

Polybutylene (PB)

Polybutylene is a polyolefin with a stiffness resembling that of low-density polyethylene, but with a long-term strength that is greater than that of high-density polyethylene (PE). Its most distinctive feature, however, is that the long-term strength is less affected by increasing temperature than that of PE. While most PEs have an upper temperature limit of around 140°F (60°C), the limit for PB is nearly 200°F (93°C).

Major applications for PB pipe and tubing are for water service lines and for uses that take advantage of its improved elevated-temperature strength. They include piping for residential hot and cold water distribution, residential fire sprinklers, and industrial uses such as hot effluent lines.

PB is similar to PE in its chemical resistance and heat fusibility. PB piping materials are covered by ASTM D2581, "Standard Specification for Polybutylene (PB) Plastics Molding and Extrusion Materials." Materials for pressure applications are designated as PB 2110, signifying a Type 2, Grade 1 material in accordance with D2581, and with a recommended maximum HDS of 1,000 psi (6.9 MPa) for water, at 73.4°F (23°C). Hot water piping standards generally require that the PB material also have an established recommended maximum HDS of 500 psi (3.5 MPa) for water at 180°F (82°C).

Cross-Linked Polyethylene (PEX)

Cross-linked polyethylene, as its name implies, is actually a thermoset. It is covered in this chapter because PEX pipe and tubing are made from PE, a thermoplastic, by essentially the same extrusion process used to manufacture all thermoplastic pipes. The only difference is that in the case of PEX a cross-linking of the polymer chains occurs during or soon after pipe extrusion. Cross-linking of PE improves elevated temperature performance, chemical and stress-crack resistance, creep resistance, and abrasion resistance. While most PEs have an upper temperature limit of about 140°F (60°C), PEX piping may be used up to around 200°F (93°C).

Three methods, as follows, are used commercially to cross-link PE piping materials: *silane curing; peroxide curing;* and *radiation.* Silene PEX materials are often referred as *moisture-cured* because they cross-link on exposure of the pipe to water. The pipe is produced by a two-stage process. First, a silene-grafted PE is combined with a catalyst PE concentrate and extruded into pipe using standard extrusion equipment. Then, after the pipe has been extruded, cross-linking is effected by exposing the pipe to moisture.

Peroxide PEX derives its name from the class of chemicals, *peroxides,* that is used to achieve cross-linking. These cross-linking agents are incorporated into the base PE either during or after extrusion. Cross-linking is initiated when the temperature reaches that at which the peroxide decomposes, thereby yielding free-radicals that cross-link the PE.

Radiation PEX pipe is produced by subjecting PE pipe to electromagnetic radiation (gamma radiation) or high-energy electrons (beta radiation).

All three methods are capable of producing equivalent products. PEX pipe is tested to the same performance standards regardless of the manufacturing method. Properties of a PEX material are determined by the properties of the base PE, the stabilizer and additive package, and the degree of cross-linking as determined using method ASTM D2765, "Standard Test Method for Determination of Gel Content and Swell Ratio of Cross-linked Ethylene Plastics." To comply with existing standards PEX piping must be cross-linked to within a range of 65 to 89 percent.

Current PEX piping materials carry a recommended maximum HDS for water of 630 psi (4.3 MPa) at 73.4°F (23°C), and 400 psi (2.8 MPa) at 180°F (82°C). Some materials are also listed with a recommended maximum HDS of 315 psi (2.2 MPa) at 200°F (93°C).

PEX is also commonly used in PEX-Aluminum-PEX (PEX-Al-PEX) composite pipe. In this pipe PEX inner and outer layers sandwich a thin tubular aluminum reinforcement which significantly enhances the pipe pressure rating.

PEX and PEX-Al-PEX pipes are manufactured in North America in diameters through NPS 2 (DN 50). Their primary applications take advantage of improved elevated temperature performance. These include hot and cold water piping systems, hydronic heating, under-floor or radiant-heating systems, snow-melting systems, and residential fire sprinkler piping.

Polypropylene (PP)

Polypropylene is a polyolefin similar in properties to high-density PE but somewhat harder, more temperature-resistant, and lighter in weight, but less tough. It is also similar to PE in its chemical resistance and heat fusibility. As in the case of PE, PP can be joined to itself by socket fusion, butt fusion, and electrofusion.

Because of its greater stiffness and better tolerance to elevated temperates, PP is sometimes chosen over PE where these qualities are advantageous (e.g., for aboveground piping and for the conveying of hot fluids). A principal application is for corrosive drainage piping, for which PP offers better solvent resistance than either ABS or PVC. A product line of PP corrosive drainage piping made from a flame-retardant grade of material is offered for use in laboratories and hospitals, and for chemical manufacturing.

Another principal application for PP is for conveying corrosive chemicals under pressure. For this application, socket fusion systems of pressure-rated PP pipe and fittings are available through NPS 6 (DN 150). At present there are no consensus standards covering PP pressure pipe; all available products are proprietary.

Polypropylene materials are classified by ASTM D4101, ''Standard Specification for Polypropylene Molding and Extrusion Materials,'' into two types. Type I covers materials that have the highest rigidity and strength but that offer only moderate toughness. Type II covers materials (copolymers of propylene with ethylene or other olefins) which tend to be less rigid and strong but have improved toughness, particularly at lower temperatures. Both types are used for pipe.

Acrylonitrile-Butadiene-Styrene (ABS)

ABS plastics are made by combining styrene-acrylonitrile copolymers with copolymers formed by reacting styrene-acrylonitrile with butadiene. The butadiene copolymers impart toughness, while the acrylonitrile copolymers contribute strength, rigidity, and hardness. The result is a tough, relatively strong plastic that is easy to mold and extrude.

The ABS family covers a wide range of materials. The proportions of the basic components and the way in which they are combined can be varied to produce a wide range of end properties. A major use of ABS for pipe is in the manufacture of drain-waste-vent (DWV) piping, for which it offers good rigidity, temperature resistance, low-temperature toughness, and the ability to make fast-setting solvent cemented joints. ABS has been used for pressure piping, primarily for water service applications, but it has been largely displaced by the stronger, more chemically resistant, and more economical PVC. However, compressed-air piping made from a proprietary extra-tough, shatter-resistant composition is currently marketed in Europe and the United States.

ABS materials are classified by ASTM D1788, ‘‘Standard Specification for Rigid Acrylonitrile-Butadiene-Styrene (ABS) Plastics,’’ in accordance with the cell class format by which each of three properties—impact strength (toughness), tensile stress at yield (short-term strength), and deflection temperature under load (temperature resistance)—is accorded a cell number depending on the property value. The ASTM specification for ABS DWV pipe requires that the material have a minimum cell classification of ABS 2–2–2, which signifies the following minimum properties: notch impact strength of 2 ft-lb/in (0.1 N-m/mm) of notch, 180°F (82°C) deflection temperature, and 4,000 psi (2.8 MPa) tensile strength.

Fluoroplastics

Fluoroplastics designate a broad family of paraffinic polymers that have some or all of the hydrogen replaced by fluorine. The fully fluorinated fluorocarbons include perfluoroalkoxy (PFA), polytrafluoroethylene (PTFE), and fluorinated ethylene propylene (FEP). The partially fluorinated fluoroplastics include ethylene tetrafluoroethylene (ETFE), polychlorotrifluoroethylene (CTFE), ethylenechlorotrifluoroethylene (ECTFE), and polyvinylidene fluoride (PVDF).

Fluorinated polymers have outstanding resistance to chemicals and excellent resistance to solvents. They also offer improved elevated-temperature properties and are very stable and durable. Most members of this family require little or no addition of processing or thermal stabilizers. For this reason they are often specified when exceptional purity of water or other liquids must be maintained. These materials are also very fire resistant.

The various kinds of fluorinated polymers just listed have been used as liners for metal piping to enhance its chemical resistance. Pipe, tubing, and fittings totally made of fluorinated plastics are commercially available, principally from PVDF and PFA, in sizes up to about NPS 6 (DN 150). The pipe is generally joined by means of heat-fused socket fittings. PVDF has good strength, wear resistance, and creep resistance, and can be used over a temperature range from about −100 to 300°F (−70° to 150°C). PFA has somewhat less strength and creep resistance but offers greater toughness and can be used up to over 400°F (200°C).

Fluorinated plastics also have outstanding resistance to weathering and electromagnetic radiation. These materials do not require the use of additives to achieve weathering and ultraviolet resistance. Because of their immunity to radiation, they are used in the reprocessing of nuclear wastes and similar radiation-intensive exposures. And because they are additive-free, these pipes are also used to convey fluids that must remain ultrapure and totally free of metallic ion contamination.

JOINING METHODS

Plastics piping can be joined by different methods (see Table D1.8) depending on the characteristics of the material. For example, ABS, PVC, and CPVC can be solvent cemented. However, polyolefins (PE, PB, and PP) and fluoropolymers cannot be joined by this method because of their high solvent resistance; but they can be readily heat-fused. Both heat fusion and solvent cementing yield monolithic

TABLE D1.8 Common Methods for Joining Thermoplastics Piping

Joining Method	ABS	PVC	CPVC	PE	PEX	PB	PP	PVDF
Solvent cementing	X	X	X	—	—	—	—	—
Heat fusion	—	—	—	X	—	X	X	X
Threading[1]	X	X	X	X	—	—	X	X
Flanged connectors[2]	X	X	X	X	—	X	X	X
Grooved joints[3]	X	X	X	X	—	—	X	X
Mechanical compression[4]	X	X	X	X	X	X	X	X
Elastomeric seal	X	X	X	X	X	X	X	X
Flaring[5]	—	—	—	X	—	X	—	—

Notes:

1. Generally limited to pipes of wall thickness not less than that of Schedule 80.
2. Flanged adapters can be fastened to plastic pipe by means of heat fusion, solvent cementing, or threading.
3. Grooving requires a minimum pipe wall thickness which depends on the material. The pipe manufacturer should be consulted.
4. In most cases internal stiffeners are required to permanently support the pipe against compressive forces generated by these fittings.
5. Not all commercial grades may be flared. Consult the pipe manufacturer for specific recommendations.

joints of maximum strength and of chemical resistance that is not compromised by the introduction of other materials.

In *solvent cementing,* often referred to as *solvent welding,* the mating spigot-socket or saddle-pipe surfaces are readily fused to each other by the softening action of the solvent cement that is placed between the contacting surfaces. Solvent cements achieve bonding by a fusion process, and not by adhesion. Thorough contact of these surfaces with no gaps is essential to the development of good fusion. After initial bonding of the two mating surfaces is achieved, the solvent in the solvent cement gradually migrates and evaporates away. When the solvent is gone the joint is said to have been ‘‘cured’’, at which point it achieves its maximum strength. Handling strength is usually achieved in a few minutes. Complete curing may take from hours to longer than a day, depending on the temperature and other conditions. A description of the proper procedure for solvent cementing PVC pipe and fittings is the subject of ASTM Standard Practice D2855.

In *heat fusion* softening of the mating surfaces is achieved by melting. There are two techniques used for achieving the required degree of surface melting. One is to heat with a specially designed heating iron just prior to joining. In the other, the surfaces are first mated and then brought to the proper melt temperature by means of heating wires embedded in the socket. This latter technique, called *electrofusion,* is used with PE piping and also for PP industrial drainage piping.

There are two kinds of heat fusion jointing systems. One of them is the *socket-spigot system,* similar to that used for solvent cementing. In the other the butt ends of pipe and/or fittings are squared off precisely, heated, and then quickly brought together and kept under sufficient pressure until enough cooling has occurred for the development of adequate working strength. Socket fusion is limited to the smaller piping sizes, generally not above 4 in (100 mm). Larger-diameter pipe is heat-fused by the butt-fusion process. Automatic, portable equipment for field joining by butt fusion is available to join all available pressure pipe sizes. ASTM Recommended Practice D2657 covers socket, butt, and saddle heat fusion. The standard recommended practice for electrofusion joining is given by ASTM F1290.

Flanged connections are often used for industrial applications, particularly when making transitions to nonplastic components such as to a metal valve or to a tank outlet, or when it is advantageous to provide for easy removal of a pipe section or other component from a pipeline for cleaning, maintenance, or other purpose. Flange connectors can be applied on the pipe by heat fusion (socket or butt), or solvent cementing, depending on the material. Oftentimes, particularly in the cases of larger-diameter pipes, the use of plastic flanges requires the use of a backup metal flange to ensure even distribution of compressive stresses and optimum fluid tightness. Recommendations regarding proper use of flanges, including bolt tightening limits, are covered by industry manuals and are also available from piping manufacturers.

Much of the pipe used for buried water and sewer lines and drains is joined with *bell-and-spigot connections* that include an elastomeric gasket to seal the joint. The bell, including the gasket cavity, is usually formed during manufacture of the pipe or fitting and is an integral part of the product. Rubber-gasketed connectors facilitate construction and produce tight joints, even when made under foul-weather and poor field conditions, when solvent cementing and heat fusion joining may be adversely affected. ASTM D3112 prescribes requirements for elastomeric joints for nonpressure applications, and D3139 presents requirements for elastomeric joints intended for pressure uses.

Threading is also sometimes used with certain of the more rigid plastics like PVC or CPVC. Molded threads with reduced roots are preferred because cut threads are more notch-sensitive. Molded threaded adapters are available for solvent cementing to PVC and CPVC pipe. If pipe is to be threaded, it is generally recommended that its wall thickness be not less than that corresponding to Schedule 80. Threaded connections of any type are prohibited for gas distribution.

Mechanical compression fittings are also used, particularly when making transition connections to dissimilar materials. Mechanical connectors are the only option for connecting PEX since it cannot be solvent-cemented or heat-fused. ASTM F1807 covers the commonly used metal insert fittings for PEX pipe. In one design, the fitting is inserted inside the PEX pipe, and a copper ring on the outside of the pipe is crimped by means of a tool to achieve the holding strength and to provide the seal.

Many styles of mechanical fittings designed for plastics use *compressed elastomeric gaskets* for sealing. To ensure this seal is not lost through pipe deformation, the design incorporates a metal sleeve that fits inside the plastic pipe to stiffen it against the compression forces. When selecting compression fittings consideration should be given to the fitting's capacity to hold the pipe in place against pull-out forces such as can be generated by thermal contraction or earth settlement. A number of compression fittings, especially for the smaller pipe sizes, are designed to hold the pipe against pull-out forces large enough to cause the pipe to either fail or to permanently stretch by yielding.

DIMENSIONING SYSTEMS

Thermoplastic pipe is made to a number of dimensioning systems based on controlled *outside* diameters. Pipe from all thermoplastic materials is manufactured to the standard outside diameters of iron pipe sizes (IPS) of commercial wrought steel pipe (ASME B36.10). In this diameter system some plastic pipes are offered with wall thicknesses that are the same as those of Schedule 40 and Schedule 80 iron pipes.

Much more common, however, is plastic pipe with outside diameters conforming to IPS standards but with wall thicknesses sized in accordance with the standard dimension ratio (SDR) principle, whereby all pipe sizes in a given SDR series have a uniform ratio of outside diameter to minimum wall thickness. The SDRs adopted by ASTM and other organizations follow the following series: 9; 11; 13.5; 17; 21; 26; and so on. However, nonstandard dimension ratios are also sometimes used, in which case they are identified by the prefix DR. The broad acceptance of the SDR dimension system arises from the fact that certain pipe performance ratings are directly proportional to the ratio of pipe diameter to wall thickness. For example, pipes made from the same material and to the same ratio of diameter to wall thickness have the same pressure rating, and also the same pipe stiffness, irrespective of pipe size.

Other diameter systems to which plastic pipe is made include:

- *Cast-iron (Cl), or ductile-iron (Dl) pipe sizes.* PVC and PE pipes are available in this diameter sizing system to facilitate connections to fittings, valves, and hydrants in water works systems, which generally are made to cast-iron (now ductile-iron) sizes.
- *Copper tubing sizes (CTS).* CTS-sized pipe is made because it can be joined using various compression and flare fittings originally designed for copper tubing. Plastics pipe in CTS sizes is generally used for gas and water services and for hot and cold water piping.
- *Plastic pipe sizes.* Certain products, particularly nonpressure pipes made for sewer and drain applications are available in outside diameter systems that are not a copy of that used by any traditional material.
- *International Standards Organization (ISO) sizes.* Some of the larger-diameter PE pipes are made to an internationally established outside diameter dimensioning system specifically designed for plastics piping.

There is one plastic pipe that is also made to a standard *inside* diameter dimensioning system. PE pressure-rated pipes, up to NPS 6 (DN 150), are made to controlled inside diameters that are the same as the inside diameters of Schedule 40 iron pipe size (IPS). The inside diameter is controlled because this pipe series is designed to be used with insert fittings which must fit snugly inside the pipe, notwithstanding the pipe's wall thickness. The outside diameter of such pipe depends on the thickness of the pipe wall, which is determined by the pipe's pressure rating.

Many manufacturers also make non-standard-sized pipes on special order. Such pipes may be required for a particular situation, such as the sliplining of an existing corroded line with the largest possible plastics pipe that can be pulled into place.

PHYSICAL AND MECHANICAL PROPERTIES

Approximate values of some of the physical and mechanical properties for the more common generic thermoplastic piping materials are given in Table D1.9. The actual property values for a particular commercial grade of material are not accurately predictable from its ASTM classification; they can be significantly affected by the specific nature of the base polymer (e.g., its molecular weight, molecular weight distribution, kind and frequency of branches), the plastic composition (type and amount of additives), and effects of processing (e.g., some anisotropy of proper-

TABLE D1.9 Approximate Values of Physical Properties of Thermoplastic Piping Materials

Property(1)	ASTM Test Method	Approximate value at 75°F						
		ABS	PVC	CPVC	PE	PEX	PB	PVDF
Specific gravity	D792	1.08	1.4	1.54	0.95	0.94	0.92	1.76
Tensile strength $(\times 10^{-3})$ psi	D638	7.0	8.0	8.0	3.2	2.8	4.2	7.0
Tensile modulus $(\times 10^{-3})$ psi	D638	340	410	420	120	9−	55	220
Impact strength, Izod ft-lb/in of notch	D256	4	1	1.5	>10	>10	>10	3.8
Coeff. of linear expansion $(\times 10^{6})$ in/in · °F	D696	60	30	35	90	90	72	70
Thermal conductivity Btu · in/h · ft^2 · °F	C177	1.35	1.1	1.0	3.2	3.2	1.5	1.5
Specific heat Btu/lb · °F	—	0.34	0.25	0.20	0.55	0.55	0.45	0.29
Approx. operating temp. limits	—							
nonpressure, °F		180	150	210	160	210	210	300
(°C)		(80)	(65)	(100)	(70)	(100)	(100)	(150)
pressure, °F		160	130	180	140	200	180	280
(°C)		(70)	(55)	(80)	(60)	(95)	(80)	(140)

(1) Conversion factors to commonly used metric equivalents are as follows:

- psi (pounds-force per square inch) to Mpa (megapascals)—multiple by 6.9×10^3
- ft-lb/in of notch (foot · pounds-force/inch of notch) to J/m of notch (Joules/meter)—multiply by 53.4
- in/in · °F to m/m · °C—multiply by 1.8
- Btu · in/h · ft^2 · °F to cal · cm/s · °C—multiply by 344×10^6
- Btu/lb · °F to cal/g · °C—multiply by 1.0

ties and residual stresses may result because of processing conditions). Furthermore, the ultimate properties may also be somewhat influenced by the degree of stress triaxiality and the history of previously applied stresses and strains.

Compared to traditional piping materials, thermoplastics are lighter in weight, have lower heat capacities, are poorer conductors of heat, and have significantly larger coefficients of expansion and contraction. They are also less strong and rigid. However, they offer sufficient rigidity and strength to satisfy the performance requirements of a great many applications, and they are not subject to gradual degradation by rusting and other corrosive processes that commonly afflict most traditional pipe materials. When establishing appropriate values of mechanical design properties such as strength, stiffness, and strain capacity, the special consideration with plastics is over their unique time- and temperature-dependent load-deformation response.

Plastics are viscoelastic materials. Their deformation and strength properties are very significantly affected by temperature and duration of loading. Some of their properties can also be profoundly influenced by service environment. Tensile strength and stiffness values, such as given in Table D1.9 and which have been obtained by means of short-term mechanical tests adapted from metal testing, are not appropriate for design of piping systems that are subjected to longer-term sustained loading. In the case of metals the conventional tensile test is used to define basic properties such as elastic modulus, proportional limit, and yield strength. These are important not only for defining and specifying a metal but they are also basic constants for use in design equations based on elastic theory where strain is assumed to be proportional to stress. Although very few materials are perfectly elastic, the assumption of such behavior in metals is usually sufficiently close for purposes of engineering design.

The stress-strain response for plastics is curvilinear and can depart greatly from an assumption of proportionality. Furthermore, the viscoelastic nature of plastics results in a relationship between stress and strain that is greatly influenced by elapsed time under load (or by the rate of straining in the case of a tensile test), temperature, and environment. As depicted schematically by Fig. D1.3, the stress-strain response and fracture strength depend on the test conditions. For example, with some thermoplastics a reduction of about two decades in tensile strain rate, or an increase in temperature of around 50°F (28°C) can result in nearly a doubling of the strain response at failure. However, at very low strain rates total strain prior to failure tends to decrease with strain rate. Thus, the strain at failure as measured under the relatively high strain rates in a tensile test is not an accurate index of the elongation at failure, or ductility, under conditions of very low strain rates.

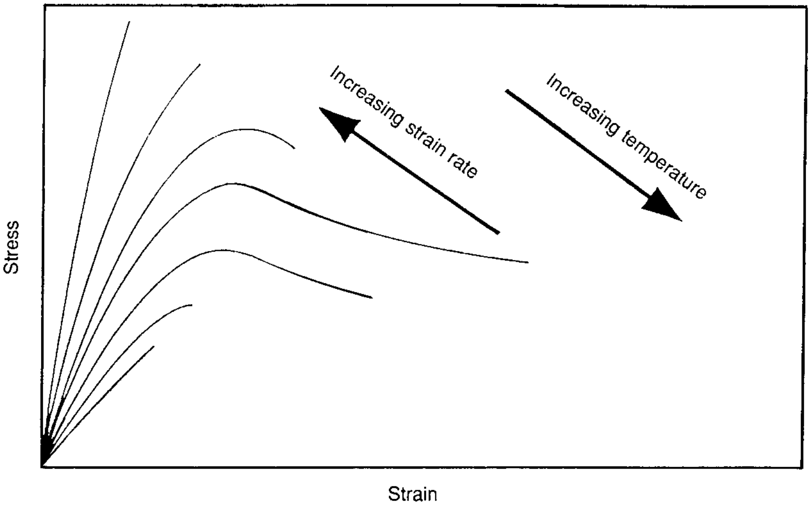

FIGURE D1.3 Tensile stress-strain response of a thermoplastic exhibiting ductile behavior at intermediate strain rates. Possible effects of strain rate and temperature are shown.

Also, as depicted by Fig. D1.3, the stress-strain response is nonlinear (although near the origin the behavior is fairly linear). Accordingly, plastics have no true elastic constants—such as the elastic modulus or the proportional limit of metals—nor do they have sharply defined yield points. The reported tensile elastic modulus for plastics represents a tangent modulus that is calculated by extending the initial portion of the load-extension curve, as obtained under a specified set of test conditions. Since plastics have no true elastic properties, the propriety of applying the term "elastic modulus," or even "modulus," in describing the stiffness or rigidity of a plastic has been questioned. However, such a "constant" has proven useful both for specification and design when its arbitrary nature and its dependence on duration of loading, temperature, and similar factors is recognized.

Even though plastic's behavior is inelastic, most of the equations for stress analysis (such as for pipe, beams, and pressure vessels) which have been derived on the assumption of elastic behavior can still be used, provided values for strength and stiffness are appropriately established. Thus, property values obtained by means of short-term tests should only be used for predicting response under loads of short duration. Short-term tests, of course, also have important value for the defining and classifying of plastic materials.

To be able to use elastic equations to forecast response under sustained, longer-term loading requires the use of "effective" values of strength and modulus that reflect mechanical behavior under such conditions. The development of longer-term property values usually involves some form of extrapolation protocol. The extrapolating procedures that are used have been borrowed from and are similar to those used with other inelastic engineering materials, such as metals at very high temperatures, which also exhibit a viscoelastic behavior. As will be discussed later, the protocols for plastics for the defining of the effects of duration of loading and temperature on engineering properties generally rely on analysis of information obtained from longer-duration testing, in some cases lasting many thousands of hours.

Viscoelasticity

As the name implies, viscoelastic materials respond to stress as complex aggregates of many different elastic and viscous (fluid) elements. The springs in the highly simplified model of Fig. D1.4 represent the elastic elements of a polymer (e.g., chain rigidity, chemical bonds, and crystallinity), each spring having a different constant that represents a *time-independent* modulus of elasticity. The dashpots represent the fluid elements (e.g., molecules slipping past each other), each one having a different viscosity or *time-dependent* stress-strain response.

When a load is first applied on this model, it results in an initial, essentially

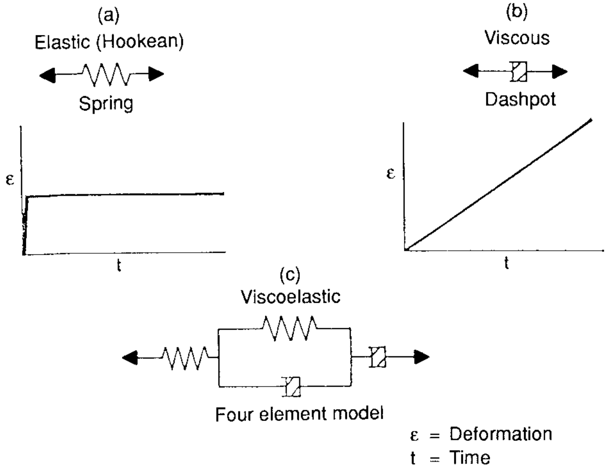

FIGURE D1.4 Model of viscoelastic behavior.

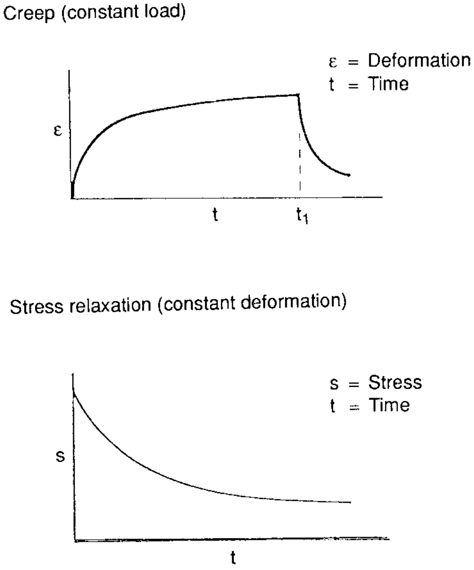
Creep (constant load)

Stress relaxation (constant deformation)

FIGURE D1.5 Viscoelastic responses.

elastic deformation. As time under load increases, the deformation increases indefinitely but at a gradually diminishing rate (Fig. D1.5). After sufficient time the rate becomes so low that for most engineering purposes one can consider that it is zero. This phenomenon of continuing deformation, which also occurs in concrete, soft metals, wood, and structural metals at very high temperatures, is called *creep.* If the load is removed after a certain time (say, at point t_1 in Fig. D1.5), a rapid initial recovery of the creep strain occurs, followed by a continuing recovery but at a steadily decreasing rate. In this model complete recovery has not been achieved. However, if the creep strain did not cause irreversible structural changes and sufficient time is allowed, the strain recovery will in time be almost complete. The rate and extent of creep strain and its recovery are sensitive to temperature and can also be influenced by environmental effects such as the absorption of solvents or other materials with which the plastic may have come in contact while under stress.

An analogous response of viscoelastic materials is stress relaxation. The load required to maintain a certain initial deformation will tend to gradually relax when that deformation is kept constant (see Fig. D1.5). Initially, stress relaxation occurs rapidly, and then with increasing time it decreases at a decreasing rate toward some ultimate value.

Tensile Creep

Each material has a characteristic stress-strain-time-temperature function. The primary form for characterizing this function is with a family of *tensile creep curves.* Creep curves plotted on Cartesian coordinates (Fig. D1.6) generally show three continuous stages: a first stage marked by large and initial deformation; a second

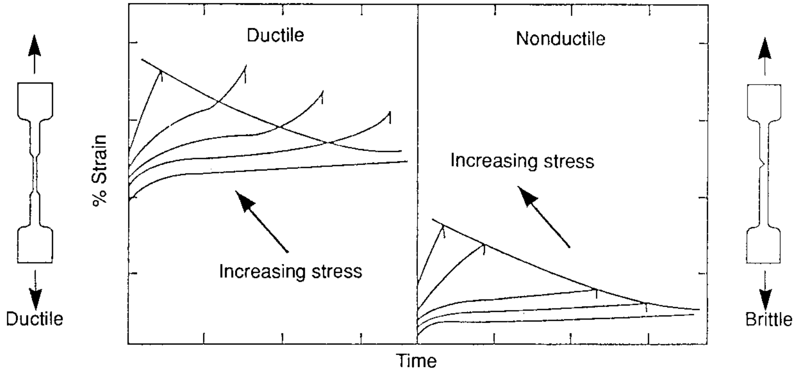

FIGURE D1.6 Schematic of creep rupture strength of thermoplastics in tension.

stage where deformation continues at a relatively slow and constant rate; and a third stage during which rupture occurs. In ductile plastics third-stage creep usually includes a distinct elongation or yielding just prior to rupture. In nonductile plastics, rupture occurs abruptly during second-stage creep. As illustrated by Fig. D1.7, which has been obtained on a certain pipe grade PE material, tensile creep curves are frequently plotted with log time as the abscissa. Such logarithmic plots allow for a more practical way of representing the information over the time range of engineering interest, and they also facilitate extrapolation of data to longer times. Many mathematical methods have been proposed to describe the creep behavior

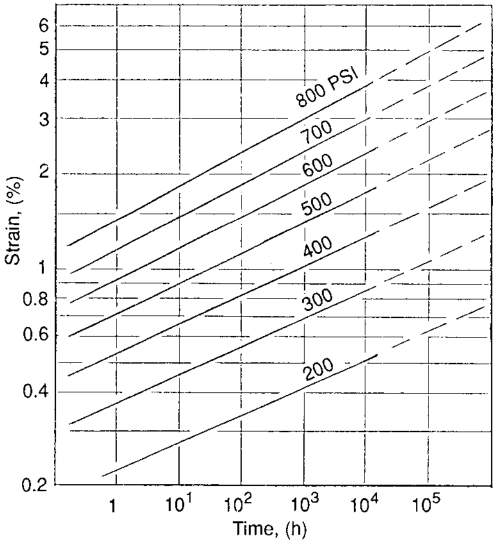

FIGURE D1.7 Tensile creep response for high-density polyethylene pipe material.

of plastic materials in terms of stress, strain, and time. One such method, which is contained in an American Society of Civil Engineers standard design practice, presents constants for PVC and PE that have been verified by tests lasting nearly 20 years.[5]

Any point on any creep curve gives a stress-strain ratio. This ratio is usually designated as the *creep modulus, apparent modulus* or, *effective modulus,* and is used for design calculations where the stress is prescribed but the strain is free to vary. Creep modulus curves derived from the creep data in Fig. D1.7 are presented in Fig. D1.8.

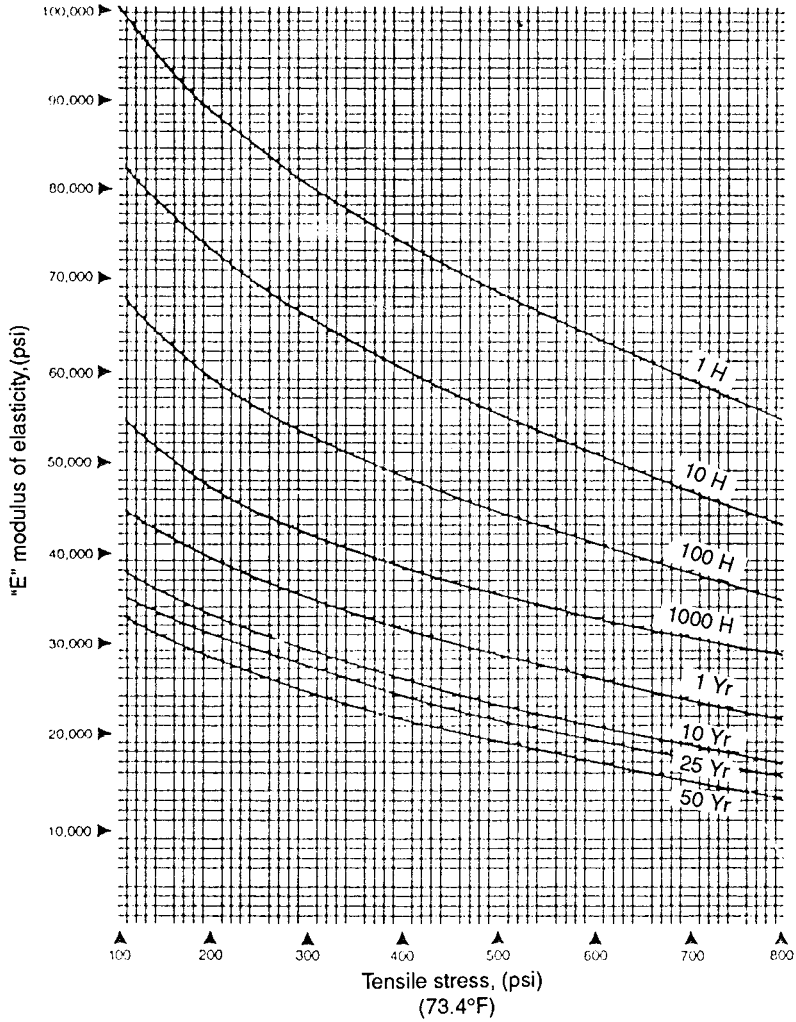

FIGURE D1.8 Creep modulus of elasticity versus stress intensity for a high-density polyethylene.

Analogous "stress-relaxation moduli" can be derived from stress-relaxation data. The *stress-relaxation modulus* is the property required for design calculations when the strain is prescribed and the stress is free to vary. However, the numerical difference between the relaxation modulus and the creep modulus is often small when the strain is small and elapsed times under continuous loading or straining are matched. Accordingly, the two can often be used interchangeably for engineering design. A procedure has been proposed to define the range over which the above assumption provides a reasonable approximation.[5] This reference includes a detailed discussion on how viscoelastic properties can be used to model stress-strain response under a variety of time-dependent loading conditions.

The creep modulus for a certain duration of loading is often expressed as a fraction of the modulus of elasticity that has been measured by a particular short-term tensile test. Such a simplified representation (see Table D1.10) assumes that over the range of engineering stresses for which the approximation will be used, creep modulus is independent of stress intensity. The consequence of this simplification is usually small and acceptable for most pipe design. The reciprocal of this fraction, called the *creep factor,* was introduced by Ref. 5 and is used by certain design practices, for example, those of the American Association of State Highway and Transportation Officials (AASHTO) culvert design specifications.[6]

TABLE D1.10 Approximate Ratio of Creep Modulus to Short-Term Modulus as a Function of Duration of Continuous Loading, for 73°F (23°C)

Duration of uninterrupted loading, h	Approximate ratio of creep to short-term modulus*	
	High-density PE	Type I PVC
1	0.80	0.84
100	0.52	0.60
10,000	0.28	0.40
438,000 (50 yrs)	0.22	0.34

* Exact ratio depends on the specific commercial grade of material, stress field, fabrication residual stresses and other factors.

Even though the deformation behavior of plastics is rather complicated, successful design can be simplified by using a creep or an apparent modulus that reasonably reflects response under the anticipated loads. For example, a buried pipe may be subjected to relatively short periods of externally induced high loads, followed by longer periods at lower loading. For such conditions, Boltzman superposition theory can be used to estimate an appropriate creep modulus.[5] More often though, a simpler design check assuming a worse-case condition is all that is required. For example, the wall thickness of a buried pipe is first selected based on pressure rating considerations and then a check is made to ensure that this wall is sufficient to withstand a given combination of traffic (short-term) and soil (long-term) loads. To conduct the design check, it can be assumed that the two loads are simultaneously and continuously present; if the pipe is adequate to this task then no further calculation need be made. While procedures such as this are often used to simplify design, care must be exercised not to make unduly conservative assumptions which could rule out a fully acceptable construction that would be justified by a more refined evaluation.

Allowable Strength When Load is Constant

The relationship between tensile load and time-to-fracture is described by the creep-rupture strength envelope of tensile creep curves (see Fig. D1.6). Each material has a specific envelope depending on the nature of the base polymer and the amount and kinds of additives used in its formulation. To simplify the task of obtaining data from which estimates of a material's long-term strength may be projected, the general practice is to ignore the creep response as a function of stress and time and only track the time-to-fail as a function of the test tensile stress. As is discussed later, excessive deformation under load is seldom, if ever, a factor in delimiting long-term strength.

Stress-rupture data are obtained by means of long-term pressure tests that are conducted on pipe specimens made from the material under evaluation. The use of pipe specimens replicates the combined hoop and axial stresses that are seen by plastic pipe in actual service. Pipe stress-rupture testing is performed in accordance with ASTM D 1598, ‘‘Time to Failure of Plastic Pipe Under Constant Internal Pressure.’’ Sufficient pressure versus time-to-fail points are obtained for a set of temperature and test environment conditions to define a hoop stress-rupture envelope through at least 10,000 h. The following relationship, commonly known as the ISO equation (denoting its adoption by the International Standards Organization), is used to calculate the pipe hoop stress generated by the internal test pressure:

$$S = [P/2] \times [D_m/t] \tag{D1.1}$$

where S = hoop stress, psi (MPa)
P = internal pressure, psi (MPa)
D_m = mean pipe diameter, in (mm)
t = minimum pipe wall thickness, in (mm)

The stress-rupture data obtained by testing in accordance with ASTM D1598 are plotted on log stress versus log time-to-fail coordinates. If, as is generally the case for materials that qualify for pressure piping, the data plot along a straight line, the best least-squares line is determined mathematically and then extrapolated to 100,000 h to determine that material's estimated average *long-term hydrostatic strength* (LTHS). The extrapolation procedure used is that of ASTM D 2837, ‘‘Obtaining Hydrostatic Design Basis for Thermoplastic Pipe Materials.’’ A material's *hydrostatic design basis* (HDB) is then established by categorizing its estimated average LTHS into one of a series of standard long-term strength values in which the numbers ascend in increments of 25 percent, as follows: 1,000 psi, 1,250 psi, 1,600 psi, 2,000 psi (6.9 MPa 8.6 MPa, 11.0 MPa, 13.8 MPa), and so on. The purpose of categorizing LTHSs into a limited number of standard HDB values is to simplify material standardization and product design. Figure D1.9 illustrates the application of the ASTM D2837 procedure to establish the HDB of a PVC 1120 material.

Every major standard specification for thermoplastic pressure pipe requires that the material from which the pipe is made have an established HDB for the standard condition of water at 73°F (23°C). Piping materials intended for hot water applications are generally required to also have an established HDB for water for 180°F (82°C). Standards covering natural gas piping require evaluation of the HDB with natural gas—which consists of methane, with minor quantities of other gases—as the test medium. However, water may be used in the case of plastics for which it has been shown that the results are essentially equivalent. For most thermoplastics, testing with water or natural gas result in little difference. However, other gaseous

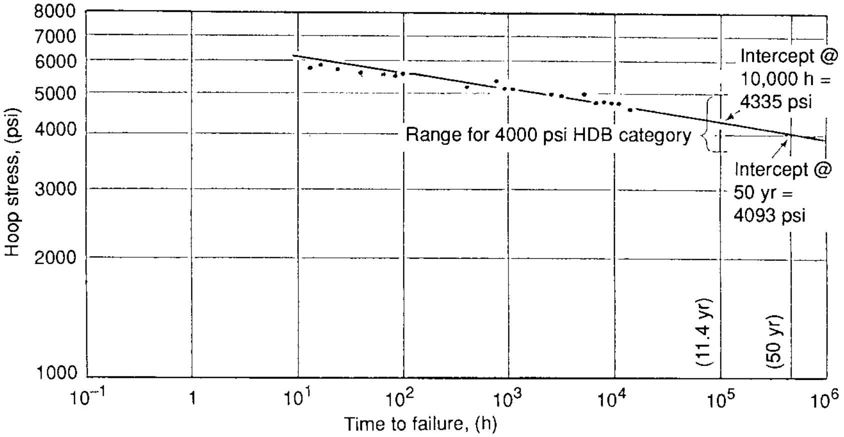

FIGURE D1.9 Application of method ASTM D 2837 to establish the hydrostatic design basis (HDB) for 73°F for a typical PVC 1120 material.

fuels such as propane and butane can make a difference, depending on the degree to which they may be absorbed by the plastic.

For some plastics, particularly those used for industrial applications, there exist stress-rupture data that have been obtained using chemical reagents of special interest.

The Plastics Pipe Institute (PPI) publishes a periodically updated list of thermoplastic pipe materials with HDBs for water which have been established in accordance with ASTM D 2837 and the additional requirements included in PPI TR-3, "Policies and Procedures for Developing Hydrostatic Design bases and Maximum Recommended Hydrostatic Design Stresses for Thermoplastic Piping Materials." Compositions that carry a PPI recommended HDB are listed in PPI TR-4, "HDB Listed Materials." A number of pressure pipe standards require that the material have a PPI listed HDB.

The HDB that is forecast by method ASTM D2837 is predicated on a fundamental assumption: that the straight-line log stress versus log time-to-fail behavior that is defined by the data obtained through at least 10,000 test hours (1.14 years) will continue its straight course through at least the 100,000-h (11.4-year) intercept. To lend confidence to this assumption, certain requirements and procedures, as follows, have been included in method D2837:

- Experimental data must include not less than 18 data points, 4 of which must span not less than 6,000 testing hours.
- At least one data point must span a test time of not less than 10,000 h.
- Statistical analysis of the data must yield a 95 percent lower confidence value for the projected 100,000-h intercept that is not less than 85 percent of the projected mean strength at 100,000 h.

Additional data requirements, particularly when establishing HDBs for elevated temperatures, have been adopted by PPI and are included in the aforementioned PPI TR-3 report.

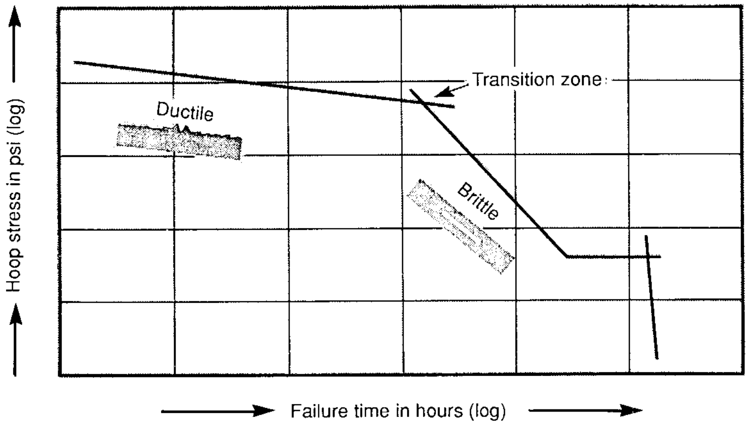

FIGURE D1.10 Schematic of the stress-rupture behavior of a polyethylene material subject to slow crack growth (first downturn) and chemical degradation (second downturn). Such materials are excluded from pressure service.

In the case of PE pipe compositions there is a further requirement in ASTM D2837 which is designed to validate the assumption that the 73.4°F stress-rupture data obtained through 10,000 h will continue its straight-line course through at least 100,000 h. PE piping materials can only qualify for pressure pipe service when they demonstrate compliance to this validation requirement. The reason for this additional requirement is the finding that PE pipe under long-term load can fail by one of three distinct failure modes, as follows[7] (see Fig. D1.10):

- The first is a ductile failure whereby the specimen ruptures as a consequence of gross yielding at a location subjected to maximum *average tensile stress.* The lower the stress, the longer it takes for yielding to occur. No, or little, irreversible structural damage occurs in the material prior to yielding. When this failure mode controls, the slope of the stress-rupture line is relatively flat.
- The second is a slit failure which is the end result of a slow crack growth mechanism, whereby *localized stress concentrations,* created by minute defects or inclusions in the material, spawn small cracks which then grow, so long as sufficient stress intensity is present. As shown by Fig. D1.10, the strength of PE regresses faster in the brittlelike slow crack zone than is projected by the ductile failure trend. If the transition from ductile to brittlelike failure occurs within the intended design life of a pipe, a forecast of its long-term strength based solely on the earlier ductile behavior can result in an overestimate of a material's actual long-term strength. Accordingly, PE materials used for pressure piping have to have high resistance to this failure mechanism to ensure continuance of the ductile stress-rupture line, and thereby optimum long-term strength.
- The third is the result of a breakdown of the polymer molecule through *oxidative or other degradation.* When this occurs, the polymer's longer-term strength can be severely compromised. For ordinary applications this possibility is precluded by the addition into the pipe composition of appropriate kinds and amounts of stabilizers and antioxidants (see discussion on chemical resistance).

The ASTM D2837 procedure for validating the HDB of PE piping materials is designed to ensure that the material's long-term strength will not be compromised by inadequate resistance to slow crack growth. The procedure used is based on the observation that the time for the onset of the slow crack growth mechanism that leads to brittlelike failure (the first downturn in Fig. D1.10) is greatly accelerated by increasing temperature, and that the rate of acceleration follows basic rate process principles. The extent by which increasing test temperature accelerates the onset of brittlelike failure is illustrated by Fig. D1.11 By relating the effect of the increased test temperatures on the shortening of the test time required to reach the brittlelike failure zone at a given stress level, one may validate the assumption that the straight-line behavior described by the ambient temperature data will continue its straight-line course through at least 100,000 h. In accordance with current standards, PE materials that do not meet the validation requirement of ASTM D2837 are excluded from pressure pipe applications.

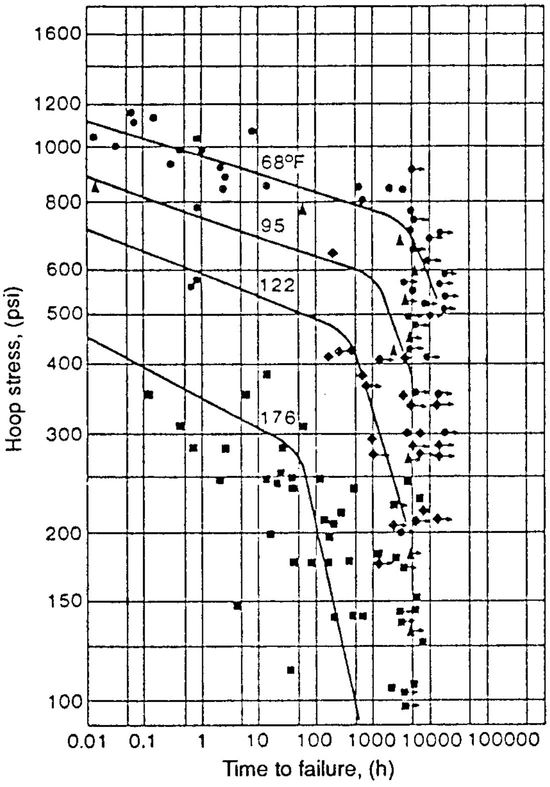

FIGURE D1.11 Effect of temperature on the time required to reach downturns caused by slow crack growth. This material does not qualify for pressure service.

The fracture mechanics process by which slowly growing cracks are incubated and then propagated has been the subject of much investigation in the recent past.[8,9] One result of this work is the development of two new test methods—both based on measuring the time-to-fail of a notched tensile specimen that is subjected to a constant tensile load at an elevated temperature—that give in relatively short time a good index of a PE's very-long-term resistance to failure by the slow crack growth process. As reported under the discussion of PE piping materials, ASTM D3350, the PE piping material specification, has been recently revised to include this test method as a material performance criterion.

To protect against oxidative degradation, the cause of the second downturn in Figure D1.10, current PE piping formulations include appropriate amounts and types of stabilizer packages. Accelerated aging studies, as well as those conducted on pipe that has been in actual service for many years, indicate that PE can be suitably protected against oxidative degradation over its intended service life when conveying water, gas, and similar fluids.[7]

Other Materials. Downturns in stress-rupture behavior have also been observed in other thermoplastics. A material's susceptibility to ''aging'' by gradual physical and chemical changes created by the stress and environmental conditions to which it is continuously subjected can result, after sufficient time, in a transition in failure mechanism that sometimes—but not always—results in a significant downward shift in its longer-term stress-rupture behavior. In cases where a significant downturn occurs after longer times than the longest test period, a forecast of long-term strength that is based on the earlier observed stress-rupture behavior could result in a significant overestimation of a material's actual long-term strength. While the primary objective of long-term stress-rupture characterization is to establish a reliable estimate of a material's long-term strength, another function of this test is to exclude from pressure piping those materials and formulations that are inadequate for very long-term service when subjected to sustained loading. Longer-term stress rupture testing is a fairly effective test procedure for screening out from pressure applications those materials that are prone to downturning in their stress rupture properties. However, as will be discussed, for more effective screening other information should also be considered.

A plastic material's susceptibility to detrimental ''aging'' that could cause downturns in its very-long-term stress-rupture properties depends on a number of factors, including the nature of the service environments; the polymer's chemical nature (e.g., PVC, PE, PB, and so on); its molecular structure (molecular weight, molecular weight distribution, branching, and so on); the formulation of the plastics composition (kind and amounts of additives, including stabilizers); and quality of manufacture. As an example, significant downturning in stress-rupture properties has been reported in PVC materials of lower molecular weights.[10] The same trend has been observed with PVC formulations that include more than relatively low quantities of finely divided fillers, such as calcium carbonates. For these reasons the policies in PPI TR-3 limit the minimum molecular weight of PVC resins, and the kind and amounts of calcium carbonate that can be used in PVC formulations intended for pressure pipe applications.

Excepting for the special requirement for PE materials that is discussed above, there is no formal general protocol in ASTM D2837 for ensuring for the particular material being analyzed that a significant downturn in stress-rupture properties will not occur sometime beyond the maximum time over which the experimental data were gathered. Therefore, the applicability of this extrapolation method to a plastic material has to be judged in consideration of other information that can give an indication about the possible occurrence of a future downturn. A positive source of confidence is, of course, successful long-term service experience with the kind of plastics for which a long-term forecast is being made. A second one is the demonstrated continuance of straight line stress-rupture behavior for much beyond the minimum 10,000 h required by ASTM D2837. Certain materials have been on test for well over 10 years. A third one is information gathered from other tests and from actual field experience about the ‘‘aging’’ effects on the material by the physical and chemical environments to which it may be subjected while in service. And a further source is the absence of a downturn during at least the first 10,000 test hours when testing the plastic at a higher temperature, say, about 40°F (22°C) above that for which the HDB is being established. As discussed previously, increasing the test temperature has a profound effect in shifting downturns to much earlier times. Therefore, the absence of a downturn in such an elevated temperature test during the first 10,000 h of testing is taken as a very good indicator that a downturn will not occur for very much longer times at the lower end-use temperature. The listings of HDBs that are issued by PPI have been established with consideration of these various means for enhancing confidence in the forecasts of longer-term strength of thermoplastics piping materials. In many cases manufacturers of plastics piping and of plastics piping materials issue reports that details other information they have accumulated in support of the appropriateness of the long-term strength predicted by method ASTM D2837.

The International Standards Organization (ISO) has recently issued report ISO/TR 9080, ‘‘Methods of Extrapolation of Hydrostatic Stress-Rupture Data to Determine the Long-Term Strength of Thermoplastics Pipe Materials.’’* This ISO method includes mathematically based procedures for the analysis of elevated multitemperature data to give assurance that the projected long-term strength for a lower maximum service temperature will not be compromised by an unanticipated downturn during the pipe’s intended service life.

Deformation under Load and Ultimate Strain Capacity

As mentioned earlier, the property of ductility—sometimes referred to as *strainability*—of thermoplastics piping materials is a generally recognized beneficial characteristic of these materials. Their capacity to deform significantly prior to rupturing allows them to shed-off, through localized deformation, stress concentrations that could initiate cracking in less ductile materials. Another benefit of ductility is the soil-pipe interaction that is generated by the flexibility of buried plastics piping.

However, too much creep while under load can lead to performance limitations such as excessive diametrical deformation of pipe under pressure. To ensure that this is not a problem, ASTM D2837 imposes the following limitation: The HDB that is projected by the extrapolation of the stress-rupture data cannot be greater than the sustained stress which would produce a 5 percent diametrical expansion at 100,000 h. For all the presently used stress-rated thermoplastic pipe materials in North America, the 5 percent expansion strength has been determined not to be a limiting factor. Therefore, expansion measurements are not required for these materials.

Although the diametrical expansion at failure of a thermoplastic pipe subjected to a stress equal to its HDB is under 5 percent, it is generally above 3 percent and usually closer to 4 percent. Engineering materials are considered to be ductile when they are able to deform prior to failure by at least 3 percent. When a material is ductile a localized stress concentration only leads to localized plastic deformations which modify the local geometry and thereby both reduce and redistribute localized stress. If the material is brittle—that is, if it fails after but minimal deformation—localized stress concentrations remain high and can initiate a crack, which once started, is then propagated by the greatly magnified stresses that develop at the bottom of a crack under tension. Therefore, design with ductile materials can be based on *average* or nominal stress due to tension, shear, or bending. All the common design protocols for thermoplastics piping assume ductile behavior. In contrast, design with brittle materials must be based on a combined stress analysis the objective of which is to identify the *maximum* stress, or strain, in consequence of any and all possible loads, that can occur at any point in the piping, but particularly at points that invite the development of multiaxial stress intensification.

---

* Copies of ISO standards may be obtained from the American National Standards Institute. See listing of standards writing associations for address.

Experience has shown that thermoplastic piping materials which exhibit low strain capacity under sustained loading tend to fail in time by cracks that initiate and then slowly grow at points of localized stress concentration. In the case of buried pipes, conditions that can produce localized stress concentrations include stone impingement, shear loading due to differential settlement, excessive bending, and nonrounded corners in fittings. While the occurrence of localized stress intensifications should always be mitigated by proper product design and installation, if the pipe material is too strain-sensitive it can be subject to premature failure even under the best of conditions. Consider the experience with early vintage high-density PE pipe materials such as the one that exhibits the stress-rupture properties depicted by Fig. D1.11 After some time in service, even as long as after 25 years, buried pipes made from such materials have failed by small cracks that were initiated at points of localized stress intensification. As shown by Fig. D1.11, sustained pressure testing of pipes made from such materials revealed that their longer-term strength was compromised by a subsequent downturn in stress-rupture properties. However, the downturn had another important negative consequence: It resulted in a loss of ductility.

In a short-term tensile test, which is conducted at a strain rate of around 20 in/min (500 mm/min), PE piping materials exhibit a total elongation at failure of well over 100 percent, in some cases over 500 percent. As is the case with all plastics, under sustained loading the elongation at failure of PE steadily decreases with increased time-to-failure. But as already mentioned, PEs now considered suitable for pressure applications always fail at deformations not less than about 3 percent, even after the longest time under sustained loading. However, the material for which the data in Figure D1.11 were obtained fails in time at diametrical expansions of under 3 percent, and the longer the time under load, the lower the value. This is shown by Figure D1.12, which compares 68°F (20°C) isometric (constant strain) diametrical expansion curves to the 68°F (20°C) stress-rupture data obtained on this PE material. In the region where the stress-rupture line (band in this case) is parallel to the isometric curves, ductile failure dominates and the diametrical expansion is fairly large. But in the region where the stress-rupture line downturns, brittlelike failures dominate and the diametrical expansion at failure can be as low as 1 percent. So, the effect of a downturn for this PE is not only a reduction in its long-term strength but its transformation from a ductile to a brittlelike-behaving material. As already mentioned, the validation requirement of ASTM D2937 excludes such PEs from pressure pipe service.

All commercial grade thermoplastic piping materials that have demonstrated permanent ductility under conditions of service exhibit stress-rupture characteristics that are free of significant downturns.

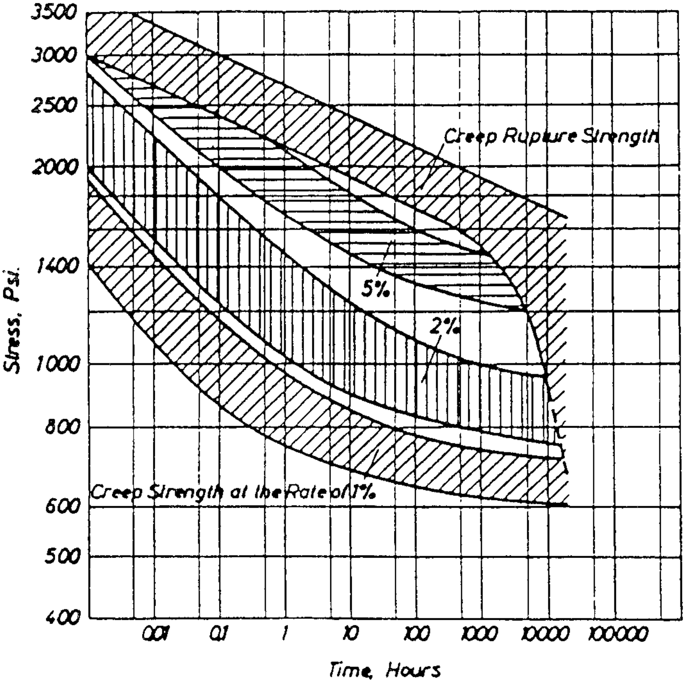

FIGURE D1.12 Comparison of the creep-rupture (also referred as stress-rupture) strength to isometric curves (constant strain) for 68°F (20°C) that have been experimentally determined on pipe made from a PE material that exhibits an early downturn in its stress versus time-to-fail characteristics.

Allowable Strain

As explained earlier, when deformation is kept constant during loading time, the load gradually relaxes, reducing—but never completely eliminating—any stress intensity which could generate and propagate cracks. As a result, the long-term strain capacity of a material maintained at constant deformation is somewhat greater than if deformation had been achieved over the same time of loading by free creeping, with no relaxation of loading. However, even though stress relaxation gives somewhat more leeway, materials intended for nonpressure pipe applications must still have a good measure of long-term strain capacity (i.e., ductility); otherwise they will behave over the long-term as brittle materials for which design and installation must anticipate and avoid any and all localized stress intensifications. This is particularly the case for materials used in profile wall construction, the geometry of which tends to produce localized stress risers.

Unlike what has become the generally accepted practice for the qualifying of pressure piping materials, for which evaluation by ASTM D 2837—or, by another suitable procedure that relies on longer-term data—is a controlling requirement, there is no common longer-term test protocol by which to judge the suitability of a plastic for nonpressure service. Recognizing the value of longer-term data some standards for nonpressure piping do require that the pipe material have an established HDB. However, because the HDB test is time consuming and expensive to run, and because some believe it is excessively demanding for nonpressure piping, the material requirements for many nonpressure pipe standards are based only on the results of shorter-term tests. The particular minimum property requirements for these materials have been established by relating their shorter-term properties to observed quality of longer-term field performance.[13,14] While this approach has generally worked quite well, experience has shown that in some cases it is not as reliable a predictor of adequacy of longer-term strain capacity as is needed. The recent emergence of new testing procedures based on fracture mechanics for the evaluating of the resistance to failure mechanisms that can compromise a materials longer-term strength and ductility promises improved discrimination for the specifying of nonpressure piping materials.[11] As of this writing, the new ASTM notched constant tensile tests that were referenced earlier are also being evaluated for use as an index of the longer-term stress crack resistance of PE materials intended for nonpressure piping.[12]

Resistance to Short-Term Loading

By virtue of the relationship of duration of loading on ultimate strain and ultimate strength, plastics have a certain ability to withstand a higher temporary loading than that indicated by their long-term strength. In short-term loading—such as represented by the higher momentary pressure created by internal pressure waves, or by the temporary added external soil pressure caused by rolling traffic—the limiting stress for long periods of sustained loading can be considerably exceeded, provided the temporary overloading is kept within reasonable limits and its occurrence is sufficiently infrequent so as not cause damage to the plastic by fatigue. Some standards (such as those of AWWA) and a number of design practices give information on the magnitude of infrequent overloading that can be safely tolerated by certain plastic pipes. In cases where the overloading is likely to occur relatively frequently, a pipe's fatigue resistance capabilities need to be considered.

Fatigue Resistance

As with any other engineering material, repeated cyclic stressing of plastics can cause a reduction in their strength through fatigue. Also, brittlelike fracture at points of stress intensification is more likely under cyclic loads than under a simple static load. There is a similarity between the shape of fatigue or *S-N* (stress amplitude versus number of cycles to failure) curves for plastics and those obtained for metals. *S-N* data[15,16] for PVC and PE pipes indicate that fatigue sensitivity varies not only from one plastic to another but can be different within the same plastic family depending on molecular structure, formulation, and fabrication quality. Also, stress risers caused by fitting or joint geometry can magnify the effects of fatigue. By limiting the magnitude of the maximum stress caused by cyclic plus static stresses, or by suppressing the amplitude of the stress change to the ‘‘safe’’ value indicated by *S-N* curves, long service life can be achieved. A number of design practices prescribe such limits.[17,18,20]

Potential Consequence of Failure Mode

The potential failure mode of a plastic pipe may determine the choice of material and/or the limiting service conditions. Some thermoplastics are subject to failure by shattering, which could present a hazard to personnel when the pipe is either used for the aboveground conveying of pressurized gases or when it is pressure tested with compressed air. For this reason, the Plastics Pipe Institute recommends that no thermoplastic pipe be tested with compressed air or used for aboveground compressed gas service unless it has been evaluated and is specifically recommended by the manufacturer for that service.

Thermoplastic pipe failure can also occur by a rapid crack propagation (RCP) process, whereby axial cracks may travel long distances and at high speeds in a pressurized pipeline. Resistance to RCP has been linked to the absorbed energy in the Charpy impact test, a property highly influenced by temperature. The possibility for the occurrence of RCP increases with increasing pressure and pipe diameter, as well as with decreasing temperature. For certain applications, such as gas distribution, a design objective is to ensure that the selected pipe material in the largest pipe diameter when operating at maximum pressure and minimum temperature will not lead to RCP should the pipe be accidentally damaged. Calculation procedures for evaluating compliance with this objective have been proposed.[19]

CHEMICAL RESISTANCE

A major reason for the broad acceptance of thermoplastics piping is its virtual freedom from attack by ambient moisture and other common corrosives. This applies not only to external surroundings, both below as well as aboveground, but also to the materials being conveyed. Being nonconductors, plastics are immune to galvanic or electrochemical corrosion. The electrical activity of electrolytes such as acids, bases, and salts is of no consequence. Plastics piping is generally durable and not subject to a gradual degradation of material and properties comparable to the rusting of steel, or atmospheric corrosion of copper, or pitting of concrete. Painting, wrapping, lining, and cathodic and other forms of corrosion protection are not required. Maintenance costs are therefore, minimal.

However, as indicated by the abbreviated chemical-resistance guide shown in Table D1.11, for each plastic there are certain substances that can be hostile. Identifying the suitability of a plastic to a specific chemical is inherently more complex than for metals for several reasons. One of these, as previously elaborated, is that even within the same family of plastics the individual members may differ in molecular composition and in the nature and quantity of compounding additives. All of these can affect chemical resistance. Chemical-resistance charts, such as the abbreviated Table D1.11, are not to be considered more than a preliminary guide.

Another reason is that plastics can interact with chemical environments by a number of different mechanisms that can vary in rate, and in degree of impairment of performance properties, depending on concentration, temperature, and stress level. The primary mechanisms are as follows:

- *Chemical attack.* A chemical environment can attack certain active sites on the polymer chain, leading to chain scission and, ultimately, to significant ''aging'' or degradation of the polymer. The rate of attack can determine suitability of the plastic—if very slow, or if arrested by the addition of an appropriate stabilizer, long service life can be realized. Strong oxidizers will attack many plastics. This is why antioxidants are generally included in the stabilization package of many thermoplastic compounds.
- *Solvation.* The absorption by a plastic of an organic solvent is called *solvation.* Its effect may range from a slight swelling and softening, with minor effect on properties, to a complete solution. For example, the solvent cementing of ABS and PVC is based on solvation.

TABLE D1.11 Thermoplastic Piping Materials: Chemical Resistance Guide for Ambient Temperatures (See Note 1)

		PVC							
Chemical	ABS	Type I	Type II	CPVC	PE	PEX	PB	PP	PVDF
Inorganic materials									
Acids, dilute	G	G	L	G	G	G	G	G	G
Acids, concentrated (<80%)	L	L	L	G	L	L	L	L	G
Acids, oxidizing	L	P	P	L	P	L	P	P	G
Alkalies, dilute	G	G	G	G	G	G	G	G	G
Alkalies, concentrated (<80%)	L	G	L	G	G	G	G	G	G
Gases, HCl & HF, dry	L	L	L	L	L	L	L	L	G
Gases, HCl & HF, wet	L	G	L	G	L	L	L	L	G
Gases, ammonia, dry	L	G	L	G	G	G	G	G	G
Gases, halogen, dry	L	L	L	L	L	L	L	P	G
Gases, sulfur containing, dry	P	G	L	G	G	G	L	P	G
Salts, acidic	G	G	G	G	G	G	G	G	G
Salts, basic	G	G	G	G	G	G	G	G	G
Salts, neutral	G	G	G	G	G	G	G	G	G
Salts, oxidizing	L	L	L	L	G	G	G	G	G
Organic chemicals									
Acids	G	G	G	L	G	G	G	G	G
Acid anhydrides	L	L	L	P	L	L	L	L	L
Alcohols, glycols	L	G	L	G	L(2)	G	G	G	G
Esters, ethers, ketones	P	P	P	P	L	L	L	L	L
Hydrocarbons, aliphatic	L	L	L	G	L	L	L	L	G
Hydrocarbons, aromatic	P	P	P	L	P	L	P	P	G
Hydrocarbons, halogenated	L	L	L	L	P	L	P	P	L
Natural gas (fuel)	G	G	G	G	G	G	G	G	G
Mineral oil	G(2)	G	G	G	L(2)	G	G	G	G
Oils, animal & vegetable	G(2)	G	G	G	L(2)	G	G	G	G
Synthetic gas (fuel)	L	L	L	L	L	L	L	L	G

Notes:

1. G denotes good; L limited resistance; and P poor. These ratings are only for general guidance. For determination of suitability of chemical resistance under the actual anticipated end use conditions more detailed information should be consulted.
2. Stress crack resistant grade of plastic material should be used.

- *Plasticization.* When a liquid hydrocarbon is an imperfect solvent; that is, when it is miscible with a polymer but unable to dissolve it, *plasticization* may result. The plasticizing effect can vary over a wide range, depending on relative miscibilities. Plasticization can significantly compromise mechanical properties, including creep-rupture behavior.
- *Environmental stress-cracking.* Under this mechanism, fracture of the plastic can occur after some time in response to a synergistic action of stress and environment. Stress-cracking agents tend to be strong surface-wetting liquids, such as detergents, surfactants, glycols, and alcohols, which by some mechanism not yet fully identified facilitate the development and growth of microcracks when under stress. Susceptibility to stress-cracking can be mitigated by selecting stress-crack-resistant grades of material.

In all these mechanisms, stress, reagent concentration, and time are important variables. In addition, temperature has a profound effect on the results. Raising the temperature significantly increases the reaction rates. It also causes a polymer to expand and become more penetrable, more permeable, and more soluble. Forecasting performance at higher temperatures based on lower-temperature results can, therefore, be risky.

Because chemical resistance can be limited by any of the just-noted mechanisms and be affected by many variables, shorter-time ''soak'' tests cannot reliably predict actual performance. Most chemical-resistance charts are, however, based on such information. They should only be considered as an initial guide. A more effective method of evaluating the effects of chemicals, particularly for pressure piping, is creep rupture with the specimen immersed in or in contact with the test environment.

A creep-rupture test method specifically designed for evaluating the chemical resistance of plastics pipe is the subject of ISO Standard ISO 8584. ''Thermoplastic Pipes for Industrial Applications Under Pressure-Determination of the Chemical Resistance Factor and of the Basic Stress.'' Chemical resistance evaluated under this or similar methods is reported by some manufacturers. Successful previews in the same or similar service are also reliable indicators. Lacking this, chemical resistance will be best established by actual service testing. Manufacturers and trade associations can assist in obtaining this information. An advantage of service testing is that it is sure to include some minor chemical component, such as a surfactant, which could influence the final result.

When selecting plastic pipe for a given application, consideration should also be given to the possibility that the quality of the fluid being transported could be affected by permeation of organic pollutants with which the outside of a pipe may be exposed. Thermoplastics, as well as elastomers (such as used in rubber gaskets) and porous materials such as asbestos cement and concrete, may be subject to permeation through the pipe wall by lower molecular weight solvents and other liquid organics, such as petroleum products. Prior to selecting materials for installation in soil or other material that is or can be contaminated by organic solvents, the piping manufacturer should be consulted regarding permeation properties of the pipe walls, fittings, and jointing materials.

Effect on Fluids Being Conveyed

Plastic pipe materials are generally inert to the materials being transported. Because their composition includes minimal or no quantities of materials which can produce dissolved ions, plastics pipes are often used for the transport of pure materials, including deionized water. For food service there are pipes available that have been made from materials approved by the Federal Food and Drug Administration.

Plastic pipe resins are also neutral to potable water. However, because it is possible to formulate pipe with certain ingredients (such as stabilizers, catalysts, or modifiers) that could leach out and adversely impact water quality, most standards and codes require that pipe intended for this service meet the requirements of National Sanitation Foundation Standard 61, ''Drinking Water System Components-Health Effects (November, 1996).''

DESIGN AND INSTALLATION

As discussed earlier, thermoplastics are viscoelastic materials; thus they exhibit a profoundly different stress-strain and stress-rupture response than do elastic materials. Nonetheless, elastic equations used for other types of piping are frequently applicable to thermoplastics piping, provided that their engineering behavior is represented through appropriately derived values of apparent modulus and strength. Since these properties are greatly influenced by the history of the material's exposure to stress as well as by temperature and environment, proper use of traditional elastic equations requires appropriately established or estimated property values. Long-term strength values for certain conditions [such as for water at 73°F (23°C)] are available, and in some cases (i.e., maximum recommended hydrostatic design stress) they may even be part of the product standard. In addition, some codes and suggested design protocols either list or give procedures for arriving at appropriate values of strength, stiffness, and allowable strain. As this is a still developing technology, not all properties for all materials are yet available in a standardized basis. However, for the more frequently used materials, sufficient information for the majority of applications is either available or may be adequately estimated.

While the viscoelasticity of thermoplastics somewhat complicates the process of selecting appropriate material constants, materials with high strain capacity help to facilitate design. Under a great many conditions thermoplastics display a ductilelike behavior: They are able to deform significantly before fracture. This behavior helps to redistribute stresses and preclude failure by localized stress intensification which could initiate cracking in brittlelike materials. Within certain limits, design of thermoplastics piping is based on average stress; localized stress concentrations are generally ignored.

Also, as previously pointed out, the strain capacity of thermoplastics under constant strain (where stresses can gradually decrease through stress relaxation) is often significantly greater than that under constant load (where stresses intensify as the material deforms). Allowable strain limits under constant strain can therefore often be greater than the fracture strains observed under sustained loading. For example, several investigations of PVC and PE pipes subjected to constant deflections over long periods of time show that the materials did not fail at sustained strains of as high as from 5 to 10 percent.[13,14] These same strains corresponded to relatively short lifetimes when the materials were subject to constant load.

One simplification commonly employed in the North American design of flexible buried plastic pipes (the word *flexible* in this instance signifies that the pipe can undergo significant permanent deformation without cracking) assumes that internal pressure (constant load) and external loading (resulting largely in pipe bending stresses relieved by both pipe deformation and stress relaxation) are acting independently. That is, the pipe wall thickness is chosen on the basis of internal fluid pressure, and then a separate analysis is made to ensure that the pipe is sufficiently strong and structurally stable under the external loads acting alone.[17,18] In effect, localized fiber stresses due to bending and other external loadings are neglected. Standard installation practices include recommendations for avoiding localized stress concentrations. For cases where localized strain cannot be avoided and where it may thus limit design, more rigorous design protocols based on a combined loading analysis are available.[5]

There are many potential factors that could cause a material with apparent high strain capacity to shift from the ductilelike to the brittlelike state and as a result, fail at lower-than-expected strains. These can include temperature, environment, duration of loading, nature of loading (unrelieved or relieved by stress relaxation), stress triaxiality, fatigue, scale factors (such as wall thickness), damage (cuts, gouges), stored energy in system (such as residual stresses from manufacture), material imperfections (voids, contaminants), polymer aging, and chemical attack. Judging from the good track record that exists, these influences, although difficult to quantify, appear to have been adequately considered for typical uses by standards, design protocols, and installation practices. In addition, material requirements and improvements have been evolving that ensure greater durability in pipe products. Furthermore, design practices give recognition to the effects on strength and stiffness and other long-term engineering properties by time, temperature, and environment. Finally, installation recommendations address many of the unique characteristics of plastics that can affect structural integrity and durability. To be sure, the state of the art of thermoplastics piping is still evolving, and considerable work yet remains to be accomplished to further define materials properties and performance limits. Such work is ongoing, and for the latest information the reader is encouraged to refer to the growing literature, particularly to the papers presented at the various conferences that address plastics piping technology.

As demonstrated by the successful record of experience, sufficient information is available to successfully support proper application of thermoplastics over a very broad range of engineering uses. To best realize the performance potential of thermoplastics piping, the user should base materials selection and utilize design and installation practices on information, such as standards and recommended practices, which has been developed under the technical scrutiny of the consensus process of an established professional society or technical association, as well as upon the recommendations and reports issued by industry and independent sources. A number of such references are provided at the end of this chapter.

The following material is an introduction to some of the more basic aspects of the design and installation of thermoplastics piping. More detailed recommendations suitable to a particular product and situation should be sought and followed.

COMMON DESIGN AND INSTALLATION CONSIDERATIONS

Internal Hydraulic Pressure

Thermoplastic pipe is pressure rated by means of the ISO Eq. (D1.1). When rewritten to solve for pressure, this equation takes the form:

$$\mathrm{PR} = 2(\mathrm{HDS}) \times t/D_m \tag{D1.2}$$

where PR = pipe pressure rating, psi (MPa)
t = minimum wall thickness, in (mm)
D_m = mean diameter, in (mm)
HDS = HDB × DF, where HDB is in psi (MPa) units and DF is the pipe design factor

Values of HDS for water at 73°F (23°C) are specified by most ASTM and other standards that cover water and gas applications. The maximum HDS for water is generally determined by multiplying the material's HDB by a design factor (DF) of 0.5. In selecting the appropriate design factor, consideration is given to two general groups of conditions. The first group considers the manufacturing and testing variables, specifically normal variations in the material, manufacture, dimensions, quality of handling techniques, and the accuracy of the long-term strength prediction. The second group considers the application or use, specifically installation, environment, temperature, hazard involved, life expectancy desired, and the degree of reliability selected.

For gas pipe, a DF of 0.32 is prescribed by the federal code. Certain other codes and standards (e.g., those of AWWA) may prescribe specific design factors. A DF smaller than 0.5 is used in applications where greater compensation is advisable for certain anticipated conditions (e.g., surges or temperature), or where the fluid conveyed may have some effect on the pipe material properties. The final determination of the appropriate DF for any given application is up to the discretion of the design engineer.

By assuming that a pipe's outside diameter is equal to $D_m + t$, the previous equation takes the following form:

$$\mathrm{PR} = 2(\mathrm{HDS})/(\mathrm{DR} - 1) \tag{D1.3}$$

where DR = ratio of average outside pipe diameter to minimum wall thickness

Equation D1.3 is used to compute the pressure rating of DR dimensioned pipe.

There is no equivalent design system for establishing the pressure rating of fittings. Some fitting standards require that fittings have a short-term burst strength, and in some cases a 1000 h strength, that is not less than that of the pipe for which the fitting is intended. This is not always sufficient to ensure that fittings will have long-term strengths that are comparable to that of the pipe. Because of their geometry, the stresses generated by pressure on a fitting body are more complex and not amenable to easy calculations. Furthermore, such complex stress fields tend to result in a faster regression of strength with duration of loading than occurs in the simple cylindrical pipe shape. For these reasons, even if a fitting matches the short-term strength of a pipe, it may become the weak link over the long term. This is more likely the case where there are cyclic pressures that can weaken the material by fatigue, usually at fitting stress risers.

Fittings are also sometimes made from a lower molecular weight or better lubricated compound in order to facilitate molding. Such compounds may have somewhat weaker creep-rupture and fatigue characteristics, which may need to be compensated by thicker walls or by limiting the maximum service conditions of pressure and temperature. For these reasons the designer should not presume that a fitting labeled with a certain schedule (say, Schedule 40 or 80) will have the same pressure rating as the pipe of the same designation. Suggested maximum pressure ratings for PVC fittings Schedule 40 and 80 have been published[20] (see Table D1.12), and these are significantly lower than for pipe. Because of differences in mold design and other factors, it is best for the designer to consult with the fitting manufacturer for fitting pressure-rating recommendations.

AWWA C 907, "AWWA Standard for Polyvinyl Chloride (PVC) Pressure Fittings for Water—4 Inch Through 8 Inch," is distinctive from most other fitting standards in that it requires each molded fitting configuration to be qualified by an accelerated regression pressure testing intended to ensure a minimum long-term pressure strength sufficient for a 150 psi (1.0 MPa) fitting Pressure Class.

Surge Pressure

Transient and regularly recurring surge pressures may cause damage to pipe and fittings by either of two possible effects: The surge exceeds the short-term fracture strength of the pipe or one of the components; or (and this is the more likely possibility) the repetitive changes in pressure exceed the fatigue endurance limit of the pipe or some piping component. Transient or water hammer surges result from sudden changes in velocity. The pressure rise caused by the velocity change

TABLE D1.12 Suggested Maximum Sustained Working Pressures for Water for 73°F (23°C) for Schedule 40 and Schedule 80 PVC Fittings*

	Schedule 40		Schedule 80	
Nominal size, in	Required minimum burst pressure by ASTM D2466 psig	Maximum suggested working pressure psig	Required minimum burst pressure by ASTM D2467 psig	Maximum suggested working pressure psig
½	1910	358	2720	509
¾	1540	289	2200	413
1	1440	270	2020	378
1¼	1180	221	1660	312
1½	1060	198	1510	282
2	890	166	1290	243
2½	970	182	1360	255
3	840	158	1200	225
3½	770	144	1110	207
4	710	133	1040	194
5	620	117	930	173
6	560	106	890	167
8	500	93	790	148
10	450	84	600	140
12	420	79	580	137

* This table is only intended as a general guide. Appropriate maximum working pressures may vary widely depending on specific fitting design and field conditions, particularly when repetitive surge pressures are present as these may lower the long-term strength because of fatigue effects. The fitting manufacturer should be consulted for recommendations. Source of these suggested values is Ref. 20.

can be estimated by means of the same equations used for calculating the effects of water hammer in other pipes. The only difference is that with plastics the appropriate material modulus is that for the condition of dynamic, instantaneous response (about 150,000 psi (1.0 GPa) and 460,000 psi (3.2 GPa) for high-density PE and PVC, respectively, at 73°F (23°C)). In cases of network piping it is suggested that a complete network analysis be performed for more accurate estimates of possible surge pressures.

Because of the lower stiffness of plastics, the surge pressure rise that occurs from water hammer is significantly lower than for metallic piping. For example, the surge pressure rise for each foot-per-second change in flow velocity is from about 16 to 20 psi (110 to 140 kPa) and 8 to 12 psi (55 to 83 kPa) for PVC and PE, respectively, at 73°F (23°C). The exact value depends on pipe wall thickness—the thicker the wall, the larger the pressure rise. As noted previously, if there is no damage accrued by excessive fatigue, thermoplastic pipes have the capability to withstand momentary pressures that are significantly greater than the pipe's pressure rating. This is due to the stress versus time-to-failure characteristics of thermoplastic pipe materials. However, if the sum of short-term pressure rise plus the sustained working pressure exceed the pipe's short-term burst strength, failure will result.

Entrapped air in a pipeline can produce sudden accelerations of air-separated water columns. The kinetic energy of these fast-moving columns can sometimes be high enough to fracture the pipe. For this reason, when plastic piping systems are first filled with water, either for operation or testing, they should be filled carefully and relatively slowly to minimize air entrapment. Air should be vented from the high points before the system is pressurized. Other precautions should also be taken, such as carefully laying pipe to grade or using air vent-vacuum relief lines, to minimize the entrapment of air in operating pipelines.

When there exists a frequently recurring pressure surge of significant amplitude—say, over 25 percent of the operating pressure—the designer should evaluate the piping for adequacy of fatigue endurance. The resistance to fatigue varies from material to material. For example, PE pipe is quite tolerant; modern materials can withstand frequent surging up to one-half of the pipe pressure rating even when the pipe is operating at its full rating based on only static pressure considerations. In the case of PVC pipe, which is somewhat more sensitive to effects of fatigue, the following equation has been proposed[15] for estimating the maximum total hoop stress, due to both static and cyclic pressure, that PVC pipe can safely tolerate as a function of the total number of anticipated surge pressure events:

$$S' = \left(\frac{5.05 \times 10^{21}}{C'}\right) \tag{D1.4}$$

where S' = maximum allowable total hoop stress, psi (no safety factor) (for S' in MPa, multiply by 0.0069)

C' = total number of cycles

Resistance to Vacuum and External Pressure

The performance of flexible pipe with thin walls that is made from materials with low modulus of elasticity can sometimes be limited by buckling under vacuum or external pressure. A net external pressure can result from external hydrostatic loading, from internal negative pressure, from the temporary vacuum that may accompany pressure surging, or from a combination of these elements. The buckling resistance of plastic pipes may be estimated using the following adaptation of the elastic buckling equation for thin tubes:

$$P_c = \left(\frac{24EI}{1 - \nu^2}\right) \times \frac{1}{D_m^3} C \tag{D1.5}$$

where P_c = critical buckling pressure, psi (MPa)

E = apparent modulus of elasticity, psi (MPa) (For short-term loading conditions, use the values of E and ν as obtained from short-term tensile tests; for long-term loading, appropriate values as determined from long-term loading tests should be employed)

I = pipe wall moment of inertia, in^4/in (mm^4/mm)

ν = Poisson's ratio (approximately 0.35 to 0.45 for long-term loading)

D_m = mean diameter, in (mm) = diameter to centroid of pipe wall for profile wall pipe

C = ovality correction factor, $(r_0/r_1)^3$, where r_1 is the major radius of curvature of the ovalized pipe, and r_0 is the radius assuming no ovalization

For pipe of solid wall construction, for which $I = t^3/12$, the previous equation is usually expressed as follows:

$$P_c = \left(\frac{2E}{1 - \nu^2}\right) \times \left(\frac{t}{D_m}\right)^3 \times C \tag{D1.6}$$

where t = pipe wall thickness, in (mm)

According to this equation, pipe made to a constant ratio of diameter to wall thickness has the same resistance to hydraulic collapse, independent of pipe diameter.

For buried pipe, the stiffening effect of embedment can substantially increase the buckling capacity. This is discussed in a later section.

Temperature Effects

As the system temperature increases, thermoplastics piping becomes less rigid, exhibits higher impact strength, and offers lower short- and long-term strength. The opposite effects take place as temperature decreases. The exact effect depends not only on material class but its specific composition. For example, there are PEs suitable for service at temperatures as high as around 160°F (71°C); whereas other PEs might only have sufficient strength through about 120°F (49°C). In the case of fittings, wall thickness and product design also influence the effects of temperature on strength.

The best way to determine the effect of temperature on long-term strength is through stress-rupture testing. PPI TR-4, ‘‘Recommended Hydrostatic Strengths and Design Stresses for Thermoplastic Pipe and Fittings Compounds,’’ lists recommended HDBs for various commercial grade thermoplastics for temperatures up to 200°F (93°C). Table D1.13 lists approximate temperature derating factors for some of the more commonly used materials.

Because of its effect on stiffness, increasing temperature also decreases the collapse resistance of plastics pipe. As evident from inspection of Eq. (D1.5), this effect is in direct proportion to the change in the material’s apparent modulus of elasticity. This modulus changes with temperature at a rate roughly parallel with the strength derating factors given in Table D1.13.

Other principal effects to be considered in piping design and installation are those resulting from thermoplastics’ high coefficient of expansion and contraction. Some potential consequences to be considered include:

1. Piping that is installed hot may cool sufficiently after installation to generate substantial tensile forces. The final connection should be made after the pipe has equilibrated to ambient, or to the desired temperature.
2. Unrestrained pipe may shrink enough to pull out from elastomeric gasket or compression joints. The pipe should be adequately restrained by the use of anchors, or the fitting should be designed to either resist pull-out forces or to tolerate the maximum anticipated pipe movement.
3. Piping exposed to cyclic temperature changes may be susceptible to fatigue damage at points subject to repetitive bending.
4. Pipe installed when ambient temperatures are low may buckle if the compression forces developed on subsequent pipe expansion are not adequately relieved.

TABLE D1.13 Effect of Temperature on Strength and Stiffness of Thermoplastics Pipe: Approximate Temperature Derating Factors(1)

Temperature (°F)	PE	PEX	PB	PVC Type 1	CPVC	PVDF
70	1.0	1.0	1.0	1.0	1.0	1.0
80	0.95	0.95	0.97	0.88	—	0.93
90	0.90	0.91	0.92	0.75	—	0.87
100	0.80	0.87	0.86	0.62	0.78	0.82
110	0.75	0.83	0.82	0.50	—	0.76
120	0.70	0.79	0.77	0.40	0.65	0.71
130	0.50	0.76	0.72	0.30	—	0.65
140	0.40	0.73	0.68	0.22	0.50	0.61
150	0.20	0.69	0.69	NR(2)	—	0.57
160	NR	0.66	0.58	NR	0.40	0.54
180	NR	0.63	0.48	NR	0.25	0.47
200	NR	0.50	0.40	NR	0.20	0.41
220	NR	NR	NR	NR	NR	0.38
250	NR	NR	NR	NR	NR	0.35
280	NR	NR	NR	NR	NR	0.28

(1) Check with pipe manufacturer for his recommendations for derating factors for the specific composition under consideration.

(2) NR—Not resistant for continuous service at indicated temperature.

CONSIDERATIONS FOR ABOVEGROUND USES

Thermoplastic piping systems in aboveground service must be properly supported to avoid excessive stresses and sagging. Valves and other heavy piping components should be individually supported. Piping should be located, or protected, to avoid mechanical damage. The piping layout should have sufficient flexibility or other means of mitigating excessive bending and axial stresses and fatigue effects induced by repetitive expansion-contraction.

Supports and Anchors

Horizontal runs require the use of hangers that are carefully aligned and are free of rough and sharp edges. Many hangers designed for metal pipe are suitable for thermoplastic pipe as well. These include the shoe, clamp clevis, sling, and roller types. To preclude high localized support pressures, it is generally advisable to modify the hangers by increasing the bearing area by inserting a protective sleeve of plastic between the pipe and the hanger.

Vertical lines must also be supported at intervals to reduce loads on the lower fittings. This can be accomplished by using riser clamps or double bolt clamps located just below a coupling or other fitting to support the pipe. When so located, these provide the necessary support without excessive compression of the pipe.

Anchors are used in thermoplastic piping systems as fixed points from which to direct expansion-contraction and other movements in a defined direction. Their placement is selected to prevent overloading of the piping, particularly at changes of direction where pipe movement could generate excessive bending and axial stresses. Anchors should be placed as close to elbows and tees as possible. Guides are used to allow axial motion while preventing transverse movement. Both anchors and guides may be used in the control of expansion and contraction of pipelines. They should be of a style and be so located as to prevent overstressing of the pipe. A flexibility analysis can be used to determine suitable arrangements for anchors and guides.

Support Spacing

Support spacing requirements are computed using the same beam deflection equations used for metal piping. The minimum spacing requirement can result from either maximum allowable stress, or maximum allowable pipe deflection considerations for the maximum anticipated service temperature. Maximum beam deflection, or sag, is frequently the controlling factor. Typical support spacing recommendations are presented in Table D1.14.

Expansion-Contraction

There are several methods used for controlling or compensating for axial and bending stresses caused by thermal expansion. Piping runs may include changes in direction which will allow the thermally induced length changes to be taken up safely. Where this method is employed, the pipe must be able to float except at anchor points.

When the piping layout does not include sufficient changes in direction, appropriate expansion loops or offsets have to be provided. The size of the loops and offsets depend on the design (see Fig. D1.13), and the change in length of pipe that has to be accommodated. The dimensions of loops and offsets are calculated using the following equation for cantilevered beams loaded at one end[21]:

$$L = \left[\frac{3}{2} \cdot \frac{E}{S}\right]^{0.5} [D_o(\Delta L)]^{0.5} \tag{D1.7}$$

where L = loop length, in (mm)
E = modulus of elasticity at the working temperature, psi (MPa)
S = maximum allowable stress at the working temperature, psi (MPa)
D_o = outside pipe diameter, in (mm)
ΔL = change in length due to temperature change, in (mm)

Assuming a maximum allowable strain of 0.01, as suggested by a plastics industry publication,[22] the above equation reduces to:

$$L = 12.2[D_o(\Delta L)]^{0.5} \tag{D1.8}$$

For Eq. (D1.7), the convention is to use the short-term apparent modulus in combination with the maximum allowable long-term working stress (often the same value is used as the material's hydrostatic design stress). Since expansion/contraction does not occur instantaneously and since the working stress applies to a condition of constant load where, unlike this situation, there is no stress reduction due to stress relaxation, this combination is conservative. This helps to compensate for other factors, such as fatigue effects caused by repetitive expansion-contraction. Since for most plastics E and S vary with temperature at approximately the same rate,

TABLE D1.14 Typical Recommended Maximum Support Spacing, in Feet, for Thermoplastic Pipe for Continuous Spans and for Uninsulated Lines Conveying Fluids of Specific Gravity up to 1.35

Pipe dimension	PVC			CPVC				PVDF				PP			
Nominal diam., in	60°F	100°F	140°F	60°F	100°F	140°F	180°F	80°F	100°F	140°F	160°F*	60°F	100°F	140°F	180°F
							Wall Schedule 40								
½	4½	4	2½	5	4½	4	2½	3¾	3½	2		1¾	1¾	1½	1¼
¾	5	4	2½	5½	5	4	2½	4	3¾	2½		2	2	1¾	1¾
1	5½	4½	2½	6	5½	4½	2½	4¼	4	2½		2	2	2	1¾
1¼	5½	5	3	6	5½	5	3	—	—	—		2½	2¼	2	2
1½	6	5	3	6½	6	5	3	4½	4½	2½		2½	2½	2¼	2
2	6	5	3	6½	6	5	3	4½	4½	2¼		3	2¼	2½	2¼
3	7	6	3½	8	7	6	3½					3½	2¼	3	2¾
4	7½	6½	4	8½	7½	6½	4					4	3¼	3½	3
6	8½	7½	4½	9½	8½	7½	4½								
8	9	8	4½												
							Wall Schedule 80								
½	5	4½	2½	5½	5	4½	2½	4½	4½	2½		2	2	2	1½
¼	5½	4½	2½	6	5½	4½	2½	4½	4½	3		2½	2½	2¼	2
1	6	5	3	6½	6	5	3	5	4¾	3		2½	2½	2¼	2
1¼	—	—	—	—	—	—	—	—	—	—		3	2¾	2½	2½
1½	6½	5½	3½	7	6½	5½	3½	5½	5	3		3	3	2¾	2½
2	7	6	3½	7½	7	6	3½	5½	5¼	3		3½	3¼	3	2¾
3	8	7	4	9	8	7	4					4	4	3½	3½
4	9	7½	4½	10	9	7½	4½					4½	4½	4	3½
6	10	9	5	11	10	9	5								
8	11	9½	5½												

* Continuous support recommended.

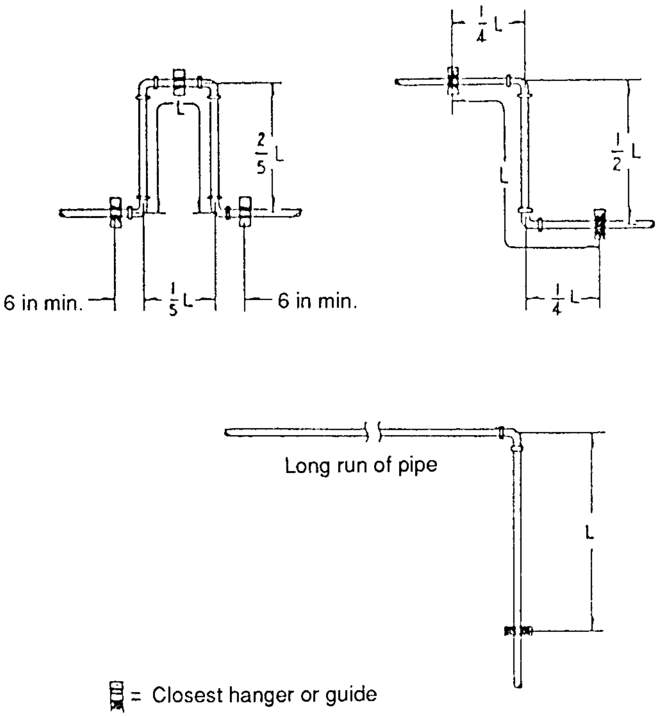

FIGURE D1.13 Expansion loops relieve thermal stresses by transforming them to bending stresses. The minimum loop strength L is generally determined by the maximum allowable bending stress or strain.

calculations based on ambient temperature values are generally also appropriate for a fairly wide operating temperature range.

Because the fitting restrains the pipe, a separate check should be made with the manufacturer regarding the fitting's capacity to absorb expansion-contraction stresses and bending moments.

Expansion joints of bellows and piston designs are available and sometimes used. However, piston expansion joints for pressure applications are generally expensive. Proper alignment of piston joints is critical to prevent binding. Bellows-type joints can accept some lateral movement.

CONSIDERATIONS FOR BELOWGROUND USES

Design and installation of thermoplastic pipe for belowground uses recognizes its "flexible" conduit behavior. As noted earlier, the word *flexible* primarily signifies that the pipe has the capacity to sustain significant deflection without failure. Although this value is somewhat arbitrary, a pipe is often considered flexible if it can sustain 2 percent deflection. Conduits that are strong and stiff and that fail at low deformations are classified as *rigid.* Both rigid and flexible piping systems take advantage of soil support to minimize internal stresses and must be designed and installed to avoid stress concentrations and deformations that could result in excessive localized stresses. Thus, the installed buried pipe is actually a pipe-soil system, with both the pipe and the soil contributing to the structural performance. This is an important concept for all types of buried piping systems.

Designing pipe for buried conditions may be different for pressure pipe and nonpressure pipe. The stresses induced by internal pressure are often high relative to those in nonpressure pipe, and the stresses in pressure pipe are constant (subject to creep), while the strains in nonpressure pipe are constant (subject to relaxation, i.e., stresses relax with time). In addition, when subjected to internal pressure, a pipe rerounds, reducing the deflection and bending stresses that result from earth loading.[5]

Thus, for many pressure pipes, a design that meets the requirements of the internal pressure condition can be considered adequate for buried applications, provided the pipe is properly installed in good-quality backfill materials. Although all designers should satisfy themselves to this through calculation checks, in general, if the following conditions are met, a pressure pipe design may be considered adequate for burial without checking the capacity for earth and live loads:

1. Minimum depth of cover of 3 ft (1 m) for live loads up to the magnitude of an AASHTO H20 truck.
2. Maximum depth of burial of 20 ft (6 m).
3. No unusual concentrated or surcharge loads exist.
4. Embedment materials are granular, stable, and compacted to at least 85 percent of maximum standard Proctor density.
5. The pipe is uniformly supported on bedding that is firm but not hard.
6. The pipe is protected from concentrated loads at transitions from soil support to structural support, such as fittings, foundation penetrations, and other connections.

For nonpressure pipe, and for pressure pipe not meeting the just-noted criteria, the following conditions must be met in designing for earth loads:

1. The pipe should not deflect excessively under earth or live loads.
2. The pipe should safely resist maximum wall compressive thrust forces due to external loads.
3. The pipe should not buckle in response to anticipated external soil and hydrostatic loads.
4. The pipe should safely resist bending stresses that result from deflection.

Because of the wide variety of pipe wall profiles and material types, not all of these criteria will be significant for every type of pipe; for instance, resistance to wall compressive thrust forces is important for profile wall pipe, but rarely is significant for solid-wall pipe.

Pipe-Soil System Parameters

The behavior of pipe-soil systems is controlled by two parameters: the *hoop stiffness parameter* S_H; and the *bending stiffness parameter* S_B. These are both ratios of the soil stiffness to the pipe stiffness. An elasticity solution for pipe embedded in an infinite elastic media was developed by Burns and Richard[23] and utilizes these two parameters to describe buried pipe behavior.

The hoop stiffness parameter is defined as:

$$S_H = M_s/\mathrm{PS}_H \tag{D1.9}$$

where S_H = hoop stiffness parameter
M_s = constrained modulus of soil, psi (MPa)
PS_H = pipe hoop stiffness parameter, psi (MPa)

The pipe hoop stiffness parameter is defined as

$$\mathrm{PS}_H = EA/R \tag{D1.10}$$

where E = pipe material modulus of elasticity, psi (MPa)
A = pipe wall area per unit length of pipe, in^2/in (mm^2/mm)
R = radius to centroid of pipe wall, in (mm)

The bending stiffness parameter is defined as:

$$S_B = M_s/PS_B \tag{D1.11}$$

where S_B = bending stiffness parameter
M_s = constrained modulus of soil, psi (MPa)
PS_B = pipe bending stiffness parameter, psi (MPa)

The pipe bending stiffness parameter is defined as

$$\mathrm{PS}_B = EI/R^3 \tag{D1.12}$$

where I = pipe wall moment of inertia per unit length, in^4/in (mm^4/mm)

The hoop stiffness parameter represents a ratio of the soil stiffness to the pipe extensional stiffness, and the bending stiffness parameter represents the ratio of the soil stiffness to the pipe flexural stiffness. In a detailed analysis the Poisson's ratio of the soil and the pipe material are also important; however, since most design methods are based on simplified models of behavior, and most pipe installation is completed by relatively crude methods, very little accuracy is lost by ignoring this parameter. The contribution of each of the hoop and bending stiffness parameters to the overall pipe soil system is important and bears discussion.

The pipe hoop stiffness parameter represents the change in pipe diameter that results from a radial pressure applied to the perimeter as shown in Fig. D1.14*a*. This change in diameter results from a reduction in the pipe circumference due to the axial compressive stress produced by the loading. The pipe bending stiffness parameter represents the change in diameter that results from a concentrated load as demonstrated in Fig. D1.14*b*. This deformation results from flexural stresses produced by the concentrated loading.

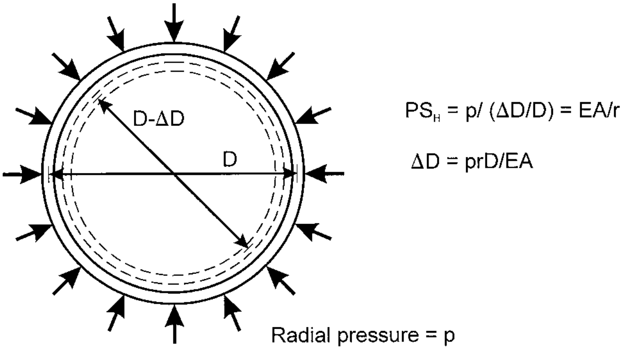

a. Pipe Hoop Stiffness

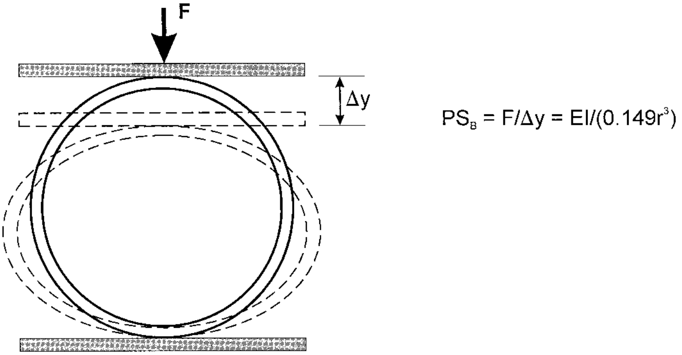

b. Pipe Bending Stiffness (Determined in Parallel Plate Test)

FIGURE D1.14 Pipe stiffness parameters.

Soil Stiffness. While many geotechnical design problems are solved based on the soil strength, represented by the soil friction angle *N,* buried pipe problems are often addressed using soil stiffness as the governing property. The constrained modulus M_s represents the stiffness of an elastic material in a one-dimensional compression test where no lateral strain is allowed. Thus it is often called the *one-dimensional modulus.* In the one-dimensional compression test, the soil stiffness increases with increasing load, as demonstrated in Fig. D1.15 For simplified design methods the slope of the secant from the origin of the curve to the stress that represents the free field soil stress at the level of the pipe springline is used to represent the average soil behavior during backfilling, represented by M_{s1} in Fig. D1.15. For short-term loads, such as live loading, the instantaneous or tangent modulus, represented by M_{s2} in Fig. D1.15, would be appropriate. Table D1.15 presents suggested design values of the constrained modulus[24] based on triaxial compression tests.[25] The testing was conducted on only three types of soils; however Table D1.16 suggests reasonable extensions of the tested soil types to other types based on AASHTO and ASTM soil classification systems. The soil stiffness values

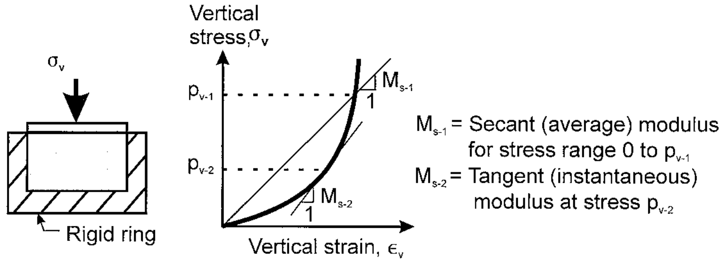
σv
Rigid ring
Vertical stress, σv
pv-1
pv-2
Ms-1
1
Ms-2
1
Vertical strain, εv
Ms-1 = Secant (average) modulus for stress range 0 to pv-1
Ms-2 = Tangent (instantaneous) modulus at stress pv-2

FIGURE D1.15 Constrained modulus, M_s.

proposed in Table D1.15 show an increase in stiffness with increasing depth of fill, which is consistent with known soil behavior. The values also compare well with the more traditional but empirical soil stiffness parameter, the modulus of soil reaction E,[26,27] which is discussed in the section on predicting deflections.

Pipe Flexural Stiffness. Flexible conduits need sufficient flexural stiffness to resist excessive deformation during handling and installation, as well as to maintain shape and structural stability in the final pipe-soil system when subjected to all the loads that can occur during pipe installation and over the intended design life. The parameter most often used to distinguish between rigid and flexible pipe, and the parameter used in many design methods for flexible pipe is *flexural stiffness.* In common practice, the pipe flexural stiffness is expressed in a form which represents the pipe resistance to deflection in a parallel plate test. The parallel plate test is a common quality control test where a pipe is compressed between two parallel plates (Fig. D1.14b). The resistance to deflection is called simply the pipe stiffness:

$$\mathrm{PS} = F/\Delta y = \mathrm{PS}_B/0.149 = EI/(0.149\,R^3) \qquad \text{(D1.13)}$$

where PS = pipe stiffness, lb/in/in (kN/m/m)
F = load on the pipe in the parallel plate test, lb/in (kN/m)
Δy = change in vertical diameter under load, F, in (m)

The parallel plate test is defined in ASTM D2412, “External Loading Properties of Plastic Pipe by Parallel Plate Loading.” It is most common to determine the pipe stiffness at a deflection representing a 5 percent decrease in the vertical diameter from the undeformed pipe, but other reference deflection levels are sometimes used. Because of the nonlinear material behavior, and the nonlinear geometric behavior in the test, the reference deflection level will affect the pipe stiffness reported from the test. Minimum short-term pipe stiffness requirements are included in most standards for thermoplastic pipe intended for buried applications. Many such documents offer more than one series of different standard pipe stiffness categories. Categorizing pipes in accordance with pipe stiffness has proven useful to designers and installers. This parameter is an important indicator of a flexible conduit’s deformation response, particularly under service loads. However, anticipated performance comparisons based on the pipe stiffness alone cannot always be made for a variety of reasons, including the following:

- Pipe stiffness is a short-term property, which, because of differences in viscoelastic behavior from one material to the next, does not always bear the same relationship to a pipe’s long-term stiffness.

TABLE D1.15 Design Values for Constrained Soil Modulus M_S

	Soil type and compaction condition (See notes 1 and 2)			
Stress level (psi)	Sn-100 (psi)	Sn-95 (psi)	Sn-90 (psi)	Sn-85 (psi)
1	2,350	2,000	1,275	470
5	3,450	2,600	1,500	520
10	4,200	3,000	1,625	570
20	5,500	3,450	1,800	650
40	7,500	4,251	2,100	825
60	9,300	5,000	2,500	1,000
Stress level (psi)		Si-95 (psi)	Si-90 (psi)	Si-85 (psi)
1		1,415	670	360
5		1,670	740	390
10		1,770	750	400
20		1,880	790	430
40		2,090	900	510
60		2,300	1,025	600
Stress level (psi)		Cl-95 (psi)	Cl-90 (psi)	Cl-85 (psi)
1		533	255	130
5		625	320	175
10		690	355	200
20		740	395	230
40		815	460	285
60		895	525	345

Notes:

1. The soil types are defined by a two-letter designation that indicates general soil classification, Sn for sands and gravels, Si for silts, and Cl for clays. Specific soil groups that fall into these categories, based on ASTM D 2487 and AASHTO M 145, are listed in Table D1.16.
2. The numerical suffix to the soil type indicates the compaction level of the soil as a percentage of maximum dry density determined in accordance with AASHTO T-99 (ASTM D698).
3. 1 MPa = 145 psi.

TABLE D1.16 Equivalent ASTM and AASHTO Soil Classifications

Basic Soil Type	ASTM D 2487	AASHTO M 145
Sn (Gravelly sand, SW)	SW, SP GW, GP	A1, A3
Si (Sandy silt, ML)	GM, SM, ML also GC and SC with less than 20% passing #200 sieve	A-2-4, A-2-5, A4
Cl (Silty clay, CL)	CL, MH, GC, SC also GC and SC with more than 20% passing #200 sieve	A-2-6, A-2-7, A5, A6

Note: The soil classification listed in parentheses is the type that was tested to develop the constrained soil modulus values in Table D1.15. The correlations to other soil types are approximate.

- Service deflections are controlled more by soil stiffness than by pipe flexural stiffness, which, among other things, means that quality of installation and nature of soil are often more important for controlling ultimate deflection than is pipe stiffness.
- The same pipe stiffness for two pipes does not mean that the pipes have an equivalent resistance to deformation by point loading such as can result from handling and installation (including compaction). Profile-wall pipe will respond differently to point loading than smooth-wall pipe, and even for a solid-wall pipe with the same DR, as pipe diameter increases the pipe's relative resistance to deformation under point loading also increases. This is because resistance to point loading is a result of longitudinal pipe stiffness as well as circumferential pipe stiffness.

To illustrate the last point, consider the example of two pipes, one NPS 6 (DN 150) and the other NPS 60 (DN 1500), each with a pipe stiffness of 60 lb/in/in (410 kN/m/m). A 60-lb load per in (10.5 kN/m) of pipe length applied to either of these two pipes produces the same decrease in vertical diameter, namely NPS 1 (DN 25). Clearly, this NPS 1 (DN 25) deformation is much more significant to the NPS 6 (DN 150) diameter pipe than to the NPS 60 (DN 1500) pipe. In recognition of this, certain larger-diameter standards categorize pipe in accordance with a *ring stiffness constant* (RSC). The RSC is defined as the parallel plate load in pounds per foot of pipe length, which causes a 1 percent reduction in diameter, when measured at 3 percent deflection. Essentially the same test, ASTM D 2412, as used to measure pipe stiffness, is used to measure RSC. The main difference is the form in which the results are expressed. Pipes with equal RSC values will undergo equal percent deflection under equal load. RSC is related to pipe properties by the following relationship:

$$\mathrm{RSC} = 6.44 E I_{\mathrm{ft}} / D^2 \qquad \text{(D1.14)}$$

where RSC = ring stiffness constant, lb/ft/percent (kN/m/percent)
D = diameter to centroid of pipe wall, in (m)
I_{ft} = pipe wall moment of inertia per unit length, in^4/ft (m^4/m)

The RSC concept is an adaptation of the *flexibility factor* (FF) which is used by the American Association of State Highway and Transportation Officials (AASHTO)[6] to classify the handling and installation flexibility of flexible conduits, including both thermoplastic and corrugated metal pipe and culvert:

$$\text{FF} = D_m^2/EI \tag{D1.15}$$

where FF = flexibility factor, in/lb (m/kN)
D_m = mean diameter of pipe, in (mm)

The classification of larger-diameter thermoplastic pipe based on the handling and installation flexibility concept recognizes that the ultimate deformation of installed conduit is greatly influenced by the conduit's response to all the short-term loads experienced during handling, placement of bedding, compaction of backfill, and other installation operations. This generally means that as pipe diameter increases, less pipe stiffness (as measured by ASTM D 2412) is required for satisfactory handling and installation. However, after selecting a conduit of adequate wall stiffness based on handling and installation concerns, the designer still has to check for structural adequacy under the anticipated lifetime service loads.

Thermoplastic pipes and conduit for nonpressure buried applications are available in a broad range of wall stiffnesses. As discussed previously, the larger the pipe size, generally the lower the pipe stiffness. Up to about NPS 4 (DN 100) pipe, stiffness is generally above 50 lb/in/in (350 kN/m/m) and can be over 200 lb/in/in (1.4 kN/m/m). In the mid sizes, through about NPS 18 (DN 450), pipe stiffness ranges from about 30 to 60 lb/in/in (210 to 410 kN/m/m). Above this size, values tend to decrease, down to 8 lb/in/in (55 kN/m/m) for the largest sizes.

AASHTO recommends a maximum flexibility factor (FF) of 9.5×10^{-2} in/lb (0.054 m/kN) for both PVC and PE. This value was originally established for corrugated aluminum conduit. This is equivalent to an RSC of about 65 lb/ft/percent (0.95 kN/m/percent) deflection. RSC's of commercially available larger sizes (NPS 18 through 96) (DN 450 through 2500) PE pipes range from 40 to 120 lb/ft/percent (0.6 to 1.8 kN/m/percent).

Pipe Hoop Stiffness. The pipe hoop stiffness has not been given significant consideration in buried pipe design. Pipes manufactured from more traditional materials have very high values for the pipe hoop stiffness and thus, for these materials, the parameter does not have a substantial effect on overall pipe behavior. More recently it has been demonstrated that some thermoplastic pipes with low cross-sectional area and low elastic modulus have much lower values for the pipe hoop stiffness, and this can have a significant effect on the pipe performance.

A high value of the hoop stiffness parameter S_H indicates that the hoop compression strain in the pipe can result in significant (1 to 2 percent) shortening of the circumference of the pipe.

Design for Earth Loads

Under vertical earth loads, buried flexible conduits deflect downward vertically and outward horizontally, thereby mobilizing passive lateral soil support for the pipe, which in turn precludes significant further downward deflection. Thus the pipe and surrounding soil interact and behave as a structural system. In this system, pipe deflection is controlled more by soil stiffness than by pipe flexural stiffness, and the soil arching characteristics bear great influence on the system's load-carrying capacity. Flexible pipe properly installed in stable soils can resist very substantial loads.

Since the pipe and the soil interact, design and installation of buried flexible pipe must always consider both the pipe and the soil around it. If a designer allows different pipes in a specification, the suitability of the backfill and installation specifications should be evaluated for each type of pipe.

One of the advantages of flexible pipe is that the quality of installation can readily be checked via a deflection test after installation is complete. A particular benefit of most thermoplastic pipe is its high strain capacity, which allows it to deform considerably and thereby generate further soil support. To take economic advantage of this benefit, many of the newer larger-diameter thermoplastic pipes are offered with relatively low wall stiffness, which requires that careful attention be given to proper design and installation in order to ensure durable and stable performance. Since the soil and the pipe must always work together to constitute a pipe-soil system, the designer has to consider both when evaluating alternate pipe materials.

Earth Loads on Buried Flexible Pipes. The load acting on a buried pipe consists of *dead load* and *surcharge load.* The dead load is the permanent load from the weight of soil and pavement above the pipe and sometimes, from any surcharge loads applied at the ground surface. Surcharge loads may, or may not, be permanent. Surface-applied wheel loads are called *live loads.*

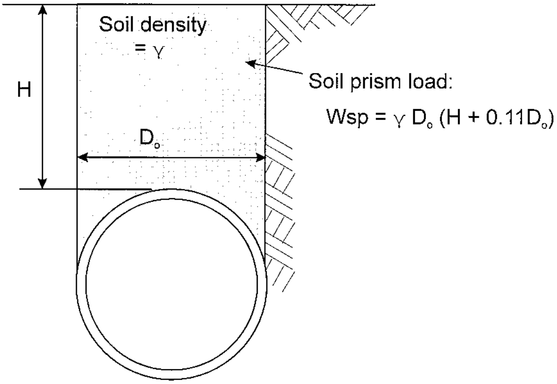

FIGURE D1.16 Soil prism load.

Earth load is measured as the hoop thrust at the springline of the pipe, and is often characterized as a function of the *soil prism load,* which is the weight of earth directly over the pipe (Fig. D1.16). The weight of the soil prism is modified by the *vertical arching factor* (VAF) to represent the effects of pipe-soil interaction. This is expressed as:

$$W_{sp} = \gamma D_o(H + 0.11 D_O) \tag{D1.16}$$

where W_{sp} = soil prism load, lb/ft (kN/m)
γ = soil unit weight, lb/ft^3 (kN/m^3)
D_o = outside diameter of pipe, ft(m)
H = depth of fill over top of pipe, ft(m)

and

$$W_p = \text{VAF}(W_{sp}) \qquad \text{(D1.17)}$$

where VAF = vertical arching factor
W_p = effective soil load, lb/ft (kN/m)

Flexible pipe are often designed with a vertical arching factor of 1.0 (for reference purposes, rigid pipe installed in embankment conditions are often designed for an arching factor of about 1.4). While VAF = 1.0 is considered conservative for flexible pipe, recent research[28,29] has shown that the VAF can be much lower for some thermoplastic pipe with low moduli of elasticity and low cross-sectional area.

Analysis of the Burns and Richard elasticity solution for buried pipe[30] indicates that the hoop stiffness parameter introduced in the previous subsection, is in fact the most important parameter in controlling the load on buried pipe. The Burns and Richard solution solves for two conditions at the interface between the buried pipe and the soil: (1) full slip—a condition where the interface is frictionless; and (2) no slip—a condition where the interface is fully bonded and shear stresses develop. The Burns and Richard equations for the buried pipe problem can be simplified and expressed in the form of the VAF without significant error as:

$$\text{VAF}_{FS} = 0.76 - 0.71(S_H - 0.7)/(S_H + 1.75) \qquad \text{(D1.18)}$$

where VAF_{FS} = vertical arching factor for the full slip solution

and

$$\text{VAF}_{NS} = 1.06 - 0.96(S_H - 0.7)/(S_H + 1.75) \qquad \text{(D1.19)}$$

where VAF_{NS} = vertical arching factor for the no-slip solution

The expressions for the VAFs are shown graphically in Fig. D1.17 When computing the VAFs for actual installations, the long-term modulus of elasticity can be used to compute S_H for long-term loads such as earth load, and the short-term modulus of elasticity can be used to compute S_H for short-term loads such as vehicle loads.

If the value of S_H is low, which is the case for most traditional pipe designs, then the no-slip VAF is a constant value of about 1.4, which is the traditional design value for rigid pipe, and the full-slip VAF is a constant value of about 1.0, which

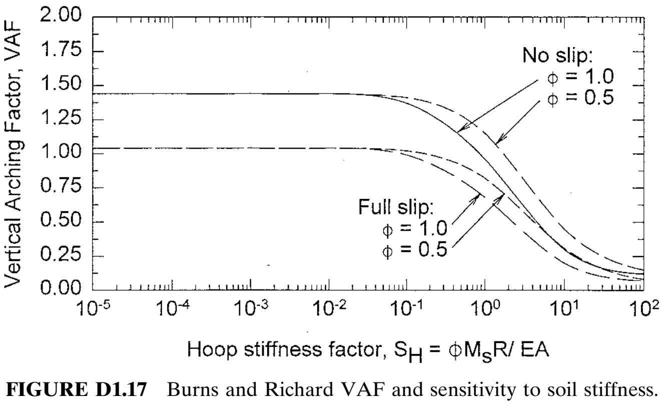

FIGURE D1.17 Burns and Richard VAF and sensitivity to soil stiffness.

is the traditional design value for flexible pipe. No research has been completed to investigate the actual condition of interface shear for flexible and rigid pipe.

Also demonstrated in Fig. D1.17 is the sensitivity of the VAF to the soil stiffness. The lines labeled "$\phi = 0.5$" represent a reduction of soil stiffness of 50%, relative to the line labeled "$\phi = 1.0$". This indicates that on the steep portion of the curve a loss of 50% of the soil stiffness causes a reduction of about 0.2 in the VAF. A reduction of soil stiffness of 50% is often associated with a reduction in density of about 5% standard Proctor density.

While the described analysis has not yet been adopted into any standards, the theory of elasticity solution of Burns and Richard[23] and field research[28,29] are consistent and suggest that the approach could be used for special installations, such as unusually deep fills. Alternatively, in 1930 Marston published a solution for determining the loads on a buried flexible pipe that is still in use today (ASCE Manual of Practice No. 60[31]). This solution assumes some of the backfill load is carried by the flexible pipe; some is carried by the trench walls; and some by the backfill at the sides of the pipe. Thus in narrow trench installations, the load is substantially less than the soil prism load. This is consistent with trench load theory for rigid pipe.

Surcharge, as well as traffic, railway, aircraft, and other live loads are generally estimated using the same methods and equations employed for other conduits, such as presented in ASCE Manual No. 60[31] and in AASHTO Specifications.[6]

When subjected to the calculated hoop compression forces, a pipe must meet the following criteria:

- *Wall Thrust.* The wall stress due to the hoop compression forces must be less than the limiting strength of the material. Little research has been done on the limiting strength of the plastics materials that are used for buried pipe, and the tension strength is often used as a limiting criteria. AASHTO[6] provides suggested limiting stresses for this purpose. Short-term strength should be used for evaluating short-term load conditions, and long-term strength should be used for evaluating long-term load conditions.
- *General Buckling.* If the hoop compression forces are sufficiently high, the pipe can buckle. This is a function of the pipe flexural stiffness and the soil stiffness. The expression most often used to evaluate this condition[5,6,32] is:

$$N = (1/\mathrm{FS})D_o[32R_w B'E'(EI/D_m^3)]^{0.5} \tag{D1.20}$$

where N = allowable wall thrust, lb/in (kN/m)
FS = factor of safety, often taken as 2.5 to 3.0
D_m = mean diameter of pipe, in (m)
R_w = coefficient for depth of groundwater above top of pipe

$$= 1 - 0.33(H_w/H) \tag{D1.21}$$

H_w = depth of groundwater above top of pipe ($<H$), ft(m)
H = depth of earth cover over top of pipe, ft (m)
B' = coefficient for uniformity of pipe support

$$= 1/(1 + \mathrm{e}^{-0.065\mathrm{H}})\ [H \text{ in ft}] \tag{D1.22}$$

E' = modulus of soil reaction, psi (MPa)
E and I are as previously defined.

Note that the constrained soil modulus M_s may be used as a direct substitute for the modulus of soil reaction, E'. For trench installations, a method of computing a "composite" value of E' that considers the stiffness of both the backfill soil and the native soil in the trench wall is presented in AWWA Manual of Practice M45.[32] This is based on the work of Leonhardt.[33,34] This buckling theory was developed based on buckling of a tube supported at discreet locations by a tube. More recently a buckling theory has been proposed based on a continuously supported ring, which more accurately reflects the condition of a buried pipe.[35] This theory is now being reviewed in the scientific community.

- *Local Buckling of Profile Pipe Wall Cross Sections.* Pipe with corrugated cross sections or other profile configurations must be able to carry the hoop compression stresses without local buckling of the thin elements. There are no currently available criteria for evaluating this condition that have consensus support at this time. Successful experience is the best current guide.

Deflection of Flexible Pipe Under Earth Load. As noted, buried flexible pipes deflect (decrease vertical diameter and increase the horizontal diameter) when subjected to earth, live, and surcharge loads. The installation conditions must be designed to assure that the ultimately achieved deflections are within acceptable limits. This will preserve the serviceability of the pipeline and assure that material stress or strain limits are not exceeded. Generally, deflection limits for flexible pipe are limited to between 7.5 and 10 percent decrease in the vertical diameter.

One of the better-known relationships, sometimes called the *Iowa formula,* was developed for flexible metal conduits at Iowa State University.[36,37] A modification of this equation is as follows:

$$\Delta v = D_l K W_{SP}/(EI/R^3 + 0.061E') \qquad \text{(D1.23)}$$

where Δv = change in vertical diameter, in (m)
D_l = deflection lag factor to account for time effects (typically taken between 1 and 1.5)
K = bedding factor (0.083 to 0.110)
W_{SP} = soil prism load, lb/in (MN/m)
EI/R^3 = pipe flexural stiffness, psi (MPa)
E' = modulus of soil reaction, psi (MPa)

The deflection lag factor accounts for change in load with time and is typically taken at a value of 1 to 1.5. The bedding factor accounts for the width of the bedding support and can vary from 0.083 to 0.110.

The modulus of soil reaction E' is an empirical measure of the stiffness of the soil in resisting pipe deflection and must be obtained empirically by back-calculating it from measured pipe deflections. The most extensive field study to determine E' was conducted by A. Howard of the U.S. Bureau of Reclamation.[26] In this study, data were collected from 113 field installations on different types of flexible pipe buried up to 50 ft (15 m) deep. For this work Howard assumed a prism load, $K = 0.1$, and $D_l = 1.0$; and, in the case of plastic pipes he computed the term EI/R^3 based on the material's short-term apparent modulus. The resultant back-calculated values of E' are tabulated in Table D1.17 in accordance with soil type. This table also identifies soils by the classification system of ASTM D 2321, "Standard Practice for Underground Installation of Thermoplastic Pipe for Sewers and Other Gravity-Flow Applications."

While E' is not a true soil property that can be evaluated by laboratory tests, recent work suggests that the constrained modulus of elasticity, M_s (see earlier discussion) may be directly substituted for E' in the Iowa formula.[23] Making this substitution and rearranging terms shows that the Iowa formula can also be written in terms of the bending stiffness parameter, S_B:

$$\Delta v = D_l K (W_{SP}/M_s)/(S_B + 0.061) \qquad \text{(D1.24)}$$

TABLE D1.17 Bureau of Reclamation Recommendations for E'(26)

Backfill type (ASTM D2487)	E' for degree of compaction of bedding, psi[3]			
	Dumped	Slight <85% Proctor <40% relative density	Moderate 85–95% Proctor 40–70% relative density	High >95% Proctor >70% relative density
Fine-grained soils (liquid limit > 50) CH, MH, CH-MH	No data available; consult a competent soils engineer; otherwise, use $E' = 0$			
Fine-grained soils (liquid limit < 50) CL, ML, ML-CL, with less than 25% coarse-grained particles	50	200	400	1,000
Fine-grained soils (liquid limit < 50) CL, ML, ML-CL, with more than 25% coarse-grained particles *Coarse-grained soils with fines*, GM, GC, SM, SC[1] with more than 12% fines	100	400	1,000	2,000
Coarse-grained soils with little or no fines GW, GP, SW, SP with less than 12% fines	200	1,000	2,000	3,000
Crushed Rock	1,000	3,000		
Accuracy in terms of percent deflection[2]	±2%	±2%	+1%	±0.5%

[1] Or any borderline soil beginning with one of these symbols (i.e., GM-GC, GC-SC).

[2] For ±1% accuracy and predicted deflection of 3%, actual deflection would be between 2% and 4%.

[3] 1 MPa = 145 psi

Notes:

A. Values applicable only for fills less than 50 ft (15 m).

B. Table does not include any safety factor.

C. For use in predicting initial deflections only; appropriate deflection lag factor must be applied for long-term deflections.

D. If bedding falls on the borderline between two compaction categories, select lower E' value or average the two values.

E. Percent Proctor based on laboratory maximum dry density from ASTM D-698.

This expression of the Iowa formula clearly shows that deflection is controlled by the soil stiffness far more than by the pipe stiffness. Designers should understand that design of buried pipe installations is actually more a design of the backfill and installation procedures than of the pipe. The significance of this is that the installation process is critical to proper performance.

Another significant aspect of Eq. (D1.24) is that the deflection will not go to infinity even if the pipe stiffness goes to zero. The apparent implication that pipe stiffness is insignificant to controlling deflection and overall pipe performance is not correct for two reasons:

- The pipe stiffness not only contributes to deflection control as predicted in the Iowa formula; it also controls the variability of deflection (i.e., the standard deviation) which is relatively independent of the average deflection predicted by the Iowa formula. NCHRP Report 225[38] demonstrated this for a wide range of pipe stiffnesses. Deflection variability is also a function of the compaction effort required to densify a soil. Variability will be reduced with backfill materials that densify easily, such as crushed stone and coarse gravel, and increased for soils that are moisture sensitive and require increased compaction effort to reach adequate density, such as silts and fine sands.
- If the pipe stiffness is too low, the buckling criterion noted above will control the design.

Various other methods have been proposed for estimating deflection, for example by Watkins,[39] Gaube,[40] and Brown and Lytton.[41] Recently, more precise approaches to forecasting deflection have been made possible by the application of computer-run finite element analysis programs that utilize soil models that incorporate true nonlinear soil behavior.[42]

Longitudinal Effects. In pressure pipe, changes in direction such as elbows and tees-result in longitudinal forces in the pipeline. These can be controlled by the use of thrust blocks, which result in minimal longitudinal stresses, or with restrained joints, which can develop significant longitudinal forces in the pipe. Most pressure pipe has adequate longitudinal capacity for this loading. Buried pipe is not specifically designed for longitudinal stresses due to uneven bedding. Uniform support due to proper installation is relied upon to avoid this condition.

INSTALLATION

Concurrent with the development of structural design methods for thermoplastics, installation practices dedicated to these materials have also been developed. Noteworthy among these are ASTM D 2774, ‘‘Underground Installation of Thermoplastic Pressure Piping,’’ ASTM D 2321, ‘‘Underground Installation of Thermoplastic Pipe for Sewers and Other Gravity-Flow Applications,’’ and ASTM F 1668 ‘‘Construction Procedures for Buried Plastic Pipe.’’

A commentary on the installation issues that are critical to the long-term performance of flexible nonpressure plastics pipe has been offered by T. J. McGrath.[31] Howard has published a book devoted to pipe installation issues.[27] Installation as well as design recommendations are also issued by various professional and trade associations. A number of these references are identified in the following section.

A significant development in pipe installation practice is the use of *controlled* *low-strength materials* (CLSM, also known as *flowable fill*) for pipe backfill. CLSM is a mixture of sand, cement, fly ash, and water with excellent flow characteristics such that vibration is not required to place it around and under a pipe or other obstructions in a trench. Strengths are low, sometimes as low as 35 psi (240 kPa) at 28 days, in order to assure that the material can be excavated in the event that an encased utility requires a repair. In 1997 ASTM held a three-day symposium on the subject of CLSM, with many papers devoted to its use around pipes.[43] One benefit of CLSM is that shrinkage is minimal after placement; thus, if used to backfill an entire trench the settlement and pavement damage that often occurs with soil backfill can be avoided.

Pipe installation can be difficult if ground conditions are poor, and it is also expensive to provide full-time inspection of pipe-laying crews. Therefore, a key step in quality control of pipe installations is to check the pipe deflection levels after the installation is complete. This should be a standard part of all pipe installation specifications.

SOURCES OF ADDITIONAL INFORMATION

On New Developments

The inroads that thermoplastics piping has made in fuel gas distribution, sewer, water, agricultural, and highway drainage, and in various industrial uses has generated many studies regarding the durability and engineering performance of these materials. Topics of particular recent interest relate to the use of these materials for larger-diameter applications for which certain limits of performance, such as maximum depth of burial, buckling resistance, and compressive wall strength are often design limiting. A reader interested in these topics, as well as in the general state of the art, should consult the proceedings of the following periodically held symposia and conferences:

Proceedings of International Conferences on Pipeline Design and Installation, American Society of Civil Engineers, 345 East 47th Street, New York, NY 10017.

Proceedings of the Symposium on Buried Plastic Pipe Technology, American Society for Testing & Materials, 100 Bar Harbor Drive, West Conshohocken, PA 19428.

Proceedings of the Fuel Gas Plastic Pipe Symposium, American Gas Association, 1515 Wilson Boulevard, Arlington, VA 22209.

Proceedings of the National Conference on Flexible Pipes, Center for Geotechnical and Groundwater Research, Ohio University, Athens, OH 45701.

Proceedings of the International Conferences on Plastics Pipe, Plastics and Rubber Institute, 11 Hobart Place, London, England SW1W OHL.

Publications Related to Standards

The following publications contain much information that is useful for all applications of plastics piping, particularly with respect to design and installation:

ASME Guide for Gas Transmission and Distribution Piping Systems. Available from American Society of Mechanical Engineers, United Engineering Center, 345 East 47th Street, New York, NY 10017, (212) 705-7722.

AGA Plastic Pipe Manual for Gas Service. Available from American Gas Association, 1515 Wilson Boulevard, Arlington, VA 22209, (703) 841-8454.

Maintenance of Operation of Gas Systems, November, 1970, Army TM5–654; NAVFAC-MO–220; Air Force AFM 91–6. Available from Superintendent of Documents, U.S. Government Printing Office, Washington, D.C. 20402.

Associations

Various trade and technical associations issue reports, manuals, and lists of references on properties, design, and installation of plastics piping. A listing of current literature offerings may be obtained by contacting these organizations at the following addresses:

Thermoplastic pipe (industrial gas distribution, sewerage, water, and general uses): The Plastics Pipe Institute, 1825 Connecticut Ave., N.W., Suite 680, Washington, DC 20009.

Thermoplastics pipe (plumbing applications): Plastics Pipe & Fittings Association, 800 Roosevelt Road, Building C, Suite 20, Glen Ellyn, IL 60137.

PVC piping (water distribution, sewerage, and irrigation): Uni-Bell PVC Pipe Association, 2655 Villa Creek Drive, Suite 155, Dallas, TX 75234.

''No-Dig'' methods for the rehabilitation of existing buried pipelines: North American Society for Trenchless Technology, 435 North Michigan Avenue, Suite 1717 Chicago, IL 60611.

Codes

Thermoplastics piping for plumbing, heating, cooling and ventilating, sewer, water, fire protection, gas distribution, and other hazardous materials may be subject to the provisions of a code or other regulation. Nearly all plumbing codes allow plastics piping for certain applications. The major model building and plumbing codes from which most such codes are derived are issued by the following organizations:

BOCA: National Building Code, BOCA National Mechanical Code, and BOCA National Plumbing Code. Building Officials and Code Administrators, International, Inc., 4051 West Flossmoor Road, Country Club Hills, IL 60478.

CABO: One and Two Family Dwelling Code. Council of American Building Officials, 5203 Leesburg Pike, Falls Church, VA 22041.

IAPMO: Uniform Plumbing Code. International Association of Building and Mechanical Officials, 20001 Walnut Drive South, Walnut, CA 91789–2855.

ICBO: Uniform Building Code and Uniform Mechanical Code. International Conference of Building Officials, 5360 South Workman Mill Road, Whittier, CA 90601.

PHCC: National Standard Plumbing Code. National Association of PlumbingHeating-Cooling Contractors, P.O. Box 6808, Falls Church, VA 22040.

SBCI: SBCCI Southern Building Code, SBCCI Southern Standard Plumbing Code, and SBCCI Southern Standard Mechanical Code. Southern Building Code Congress International, 900 Montclair Road, Birmingham, AL 35213.

Plastics piping for other applications may also be covered by other codes, such as the following:

American National Standards Institute

ANSI B31.3 Chemical Plant and Petroleum Refinery Piping. Thermoplastic Piping

ANSI B31.8 Gas Transmission and Distribution Piping Systems. ANSI Z223, National Fuel Gas Code.

Department of Transportation, Hazardous Materials Board, Office of Pipeline Safety Operations

Code of Federal Regulations (CFR), Title 49, Part 192. Transportation of Natural Gas and Other Gas by Pipeline: Minimum Federal Safety Standards.

Code of Federal Regulations (CFR), Title 49, Part 195. Transportation of Liquids by Pipeline, Minimum Federal Safety Standards.

The National Fire Protection Association (Quincy, MA) Model Codes

NFPA 30 Flammable and Combustible Liquids Codes.

NFPA 54 National Fuel Gas Code.

*NFPA 70 National Electrical Code.**

NFPA 70A Electrical Code for One and Two Family Dwellings.

NFPA 34 Outdoor Piping.

NFPA 13D, Standard for the Installation of Sprinkler Systems in One and Two Family Dwellings and Manufactured Homes.

Some standards and various jurisdictions and authorities require that before a pipe may be used for certain applications, it first must be approved for that use by a recognized, or specifically designated, organization. Organizations and approval programs for plastic pipe include the following:

For potable water:

NSF International, NSF Building, Post Office Box 1468, Ann Arbor, MI 48106.

Canadian Standards Association, 178 Rexdale Boulevard, Rexdale, Ontario, Canada, M9W 1R3

For drain, waste, and vent:

NSF International and Canadian Standards Association (see above).

For meat- and food-processing plants:

U.S. Department of Agriculture, 14th and Independence S.W., Room 0717 South, Washington, DC 20250.

---

* National Electrical Code is a registered trademark of the National Fire Protection Association, Quincy, MA 02269.

For fire protection systems, including fire sprinklers:

Underwriters Laboratories Inc., 333 Pfingsten Road, Northbrook, IL 60062.

Factory Mutual Research Corporation, 1151 Boston-Providence Turnpike, Post Office Box 688, Norwood, MA 02062.

For underground gasoline and petroleum lines:

Underwriters Laboratories Inc. (see above).

For water pipe:

American Water Works Association, Denver, CO.

REFERENCES

1. *Facts & Figures of the U.S. Plastics Industry* (1997 edition),The Society of the Plastics Industry, Inc., Washington, DC; ''Resins Report,'' Modern Plastics, January 1998.
2. Bill Bregar, ''Special Report: Plastic to Remain Leading Pipe Material,'' *Plastics News,* February 19, 1990, p. 10.
3. BCC Report P-043N, ''The Competitive Pipe Market: Materials, Applications Directions,'' Business Communications Co., Inc., Stamford, Connecticut.
4. L. E. Janson, *Plastic Pipes for Water Supply and Sewage Disposal,* Neste Chemicals, Stenungsund, Sweden, Stockholm, 1989.
5. F.J. Heger, R.E. Chambers, and A.G.H. Dietz, ''Structural Plastics Design Manual,'' *ASCE Manual of Engineering Practice No. 63,* American Society of Civil Engineers, New York, May 1984.
6. Section 18, Soil-Thermoplastic Pipe Interaction Systems, *Standard Specifications for Highway Bridges,* American Association of State Highway and Transportation Officials (AASHTO), Washington, DC.
7. Stanley A. Mruk, ''The Durability of Polyethylene Piping,'' STP 1093, *Buried Plastic Pipe Technology,* American Society for Testing and Materials, Philadelphia, October 1990.
8. P.E. O'Donoghue, M.F. Kanninen, C.H. Poplar, and M.M. Mamoun, ''A Fracture Mechanic's Assessment of the Battelle Slow Crack Growth Test for Polyethylene Gas Pipe Materials,'' *Proceedings of the Eleventh Plastic Fuel Gas Pipe Symposium,* October 3–5, 1989, San Francisco, published by the American Gas Association, Arlington, Virginia.
9. X.R. Qian Lu, and N. Brown, ''Notchology—The Effect of the Notching Method on the Slow Crack Growth Failures in a Tough Polyethylene,'' *Journal of Materials Science* 26, 1991, p. 26.
10. L.E. Janson, ''Plastic Pipes for Water Supply and Sewage Disposal,'' Borealis, Sven Axelson AB/Affisch & Reklamtryck AB, 1996.
11. Y.G. Hsuan, ''Evaluation of Stress-Crack Resistance of Polyethylene Non-Pressure Rated Resins,'' study conducted by the Geosynthetic Research Institute for the Plastics Pipe Institute, 1997.
12. Y.G. Hsuan, ''A Stress Crack Resistance Method for Evaluation of Polyethylene Materials Intended for Pipe Applications,'' PPI report published by Plastic Pipe Institute, Washington, DC., 1997.
13. L.E. Janson, ''Plastic Gravity Sewer Pipes Subject to Constant Strain by Deflection,'' *Proceedings of the International Conference on Underground Plastic Pipe,* American Society of Civil Engineers, New York, March 1981.

14. A.P. Moser, O.K. Shupe, and R.R. Bishop, "Is PVC Pipe Strain Limited After All These Years?" *STP 1093, Buried Plastic Pipe Technology,* American Society for Testing and Materials, October 1990.
15. H.W. Vinson, "Response of PVC Pipe to Large, Repetitive Pressure Surges," *Proceedings of the International Conference on Underground Plastic Pipe,* American Society of Civil Engineers, New York, March 1981.
16. J.A. Bowman, "The Fatigue Response of Polyvinyl Chloride and Polyethylene Piping Systems," STP 1093, Buried Plastic Pipe Technology, American Society for Testing and Materials, October 1990.
17. "PVC Pipe-Design and Installation," *AWWA Manual M23,* American Water Works Association, 1980.
18. "AWWA Committee Report, Design and Installation of Polyethylene Pipe Made in Accordance with C 906," American Water Works Association (AWWA), 1998.
19. M.F. Kanninen, P.E. O'Donoghue, J.W. Cardinal, S.T. Green, R. Curr, and J.G. Williams, "A Fracture Mechanic's Analysis of Rapid Crack Propagation and Arrest in Polyethylene Pipes," *Proceedings of the Eleventh Plastic Fuel Gas Pipe Symposium,* October 3–5, 1989, American Gas Association, Arlington, Virginia.
20. R.D. Bliesner, *Designing, Operating and Maintaining PVC Piping Systems Using PVC Fittings,* PVC Fittings Division of the Irrigation Association, Arlington, VA, 1987.
21. R. Hall, "Design and Installation of Above Ground Thermoplastic Piping Systems," *Managing Corrosion With Plastics,* vol. V, National Association of Corrosion Engineers, Houston, 1983.
22. M.W. Kellog Company, *Design of Piping Systems,* John Wiley & Sons, New York, 1982.
23. J.Q. Burns and R.M. Richard, "Attenuation of Stresses for Buried Cylinders," *Proceedings of the Symposium on Soil Structure Interaction,* 1964, University of Arizona, Tucson, Arizona, pp. 378–392.
24. T.J. McGrath, "Replacing E′ with the Constrained Modulus in Buried Pipe Design," *Pipelines in the Constructed Environment, Proceedings of the Conference,* American Society of Civil Engineers, 1998, Reston, VA.
25. E.T. Selig, "Soil Parameters for Design of Buried Pipelines," *Pipeline Infrastructure Proceedings of the Conference,* American Society of Civil Engineers, 1988, New York, NY, pp. 99–116.
26. A.K. Howard, "Modulus of Soil Reaction Values for Buried Flexible Pipe," *Journal of the Geotechnical Engineering,* ASCE, Vol 103, No. GT1, 1977, New York, NY.
27. A.K. Howard, *Pipeline Installation,* Relativity Publishing, Lakewood, CO, 1996.
28. N. Hashash, and E.T. Selig, "Analysis of the Performance of a Buried High Density Polyethylene Pipe," *Proceedings of the First National Conference on Flexible Pipe,* 1994, Columbus, OH.
29. N. Hashash and E.T. Selig, "Analysis of the Performance of Buried High Density Polyethylene Pipe," *Structural Performance of Flexible Pipes,* Balkema, Rotterdam, 1990.
30. T.J. McGrath, "Proposed Design Method for Calculating Loads and Hoop Compression Stresses for Buried Pipe," Report to the Polyethylene Pipe Design Task Group of the AASHTO Flexible Culvert Liaison Committee, Simpson Gumpertz & Heger Inc., 1990.
31. *ASCE Manual No. 60,* "Gravity Sanitary Sewer Design and Construction," American Society of Civil Engineers, New York, 1982.
32. AWWA, "Fiberglass Pipe Design," *AWWA Manual of Water Supply Practices M45,* American Water Works Association, Denver, CO, 1996.
33. G. Leonhardt, "Die Erdlasten bei Uberschutteten Durchlassen," *Die Bautechunik,* 56(11), 1979.
34. T.J. McGrath, R.E. Chambers, and P.A. Sharff. "Recent Trend in Installation Standards

for Plastics Pipe,'' STP 1093, Buried Plastic Pipe Technology, American Society for Testing and Materials, October 1990.

35. I.D. Moore, and E.T. Selig, ''Use of Continuum Buckling Theory for Evaluation of Buried Plastic Pipe Stability,'' STP 1093, Buried Plastic Pipe Technology, American Society for Testing and Materials, October 1990.
36. M.G. Spangler, ''The Structural Design of Flexible Pipe Culverts,'' *Iowa Engineering Experiment Station Bulletin No. 153,* Ames, IA, 1941.
37. R.K. Watkins, and M.G. Spangler, ''Some Characteristics of the Modulus of Passive Resistance of Soil. A Study in Similitude,'' *Proceedings HRB,* Vol. 37, 1958, pp. 576–583.
38. R.E. Chambers, T.J. McGrath, and F.J. Heger, ''Plastic Pipe for Subsurface Drainage of Transportation Facilities,'' *NCHRP Program Report 225,* National Cooperative Highway Research Program, National Research Council, Washington, DC, 1980.
39. R.K. Watkins, E. Szpak, and W.B. Allman, *Structural Design of PE Pipes Subjected to External Loads,* Engineering Experimental Station, Utah State University, Logan, Utah, 1974.
40. E. Gaube, *Bemessen von Kanalrohren aus PE Hart und PVC Hart,* Kunststoffe, 1977, pp. 353–356.
41. F.A. Brown and R.L. Lytton, ''Design Criteria for Buried Flexible Pipe,'' *Proceedings of Pipeline Materials and Design,* American Society of Civil Engineers, San Francisco, 1984.
42. K.M. Chua and L.J. Petroff, ''Predicting Performance of Large Diameter Profile Wall HDPE Pipe,'' *Proceedings of the Second International Conference on Case Histories in Geotechnical Engineering,* 1988, St. Louis, MO.
43. A.K. Howard and J.L. Hitch, (eds), *The Design and Application of Controlled Low-Strength Materials (Flowable Fill),* ASTM STP 1331, American Society for Testing and Materials, Conshohocken, PA, 1997.

CHAPTER D2

FIBERGLASS PIPING SYSTEMS

Carl E. Martin
Fibercast Company
Sand Springs, Oklahoma

Fiberglass reinforced plastic (FRP) piping systems have been successfully used for over fifty years in applications requiring the corrosion resistance of plastics and the strength of metallic systems. FRP piping is readily available in a wide range of types, sizes, and wall thicknesses to meet numerous design requirements. The knowledgeable piping designer can design a successful project by using established standards and criteria. This chapter is intended to provide insight into the standards and criteria available for both aboveground and underground fiberglass piping systems.

TYPICAL APPLICATIONS

Fiberglass piping is used in most industries requiring corrosion-resistant pipe. FRP is used in vent and liquid applications which operate from −40° to 300° F (−40° to 149°C). Fiberglass piping can be constructed of resin which is resistant to acids, caustics or solvents. Abrasion-resistant materials can be added to the FRP piping inside diameter liner and outside cover for excellent slurry wear resistance. Fiberglass pipe is readily available in ½ through 144 inch sizes (DN15 through 3600). Table D2.1 is a brief list of the many applications and industries where fiberglass pipe has been used successfully.

TABLE D2.1 Typical Fiberglass Pipe Applications by Industry

	Industry								
Applications	Chemical process	Food processing	Marine and offshore platforms	Mining and metal refining	Petrochemical and petroleum	Pharmaceutical	Power plants	Pulp and paper	Waste water treatment
Aeration lines									X
Brine slurry lines	X								
Chemical feed lines	X	X		X	X		X	X	X
Column piping			X						
Condensate return	X	X	X		X	X	X	X	
Conduit			X				X	X	
Cooling water lines	X	X			X	X	X		
Disposal well systems	X		X	X	X				X
Downhole tubing and casing			X						X
Effluent drain lines	X	X	X	X	X	X	X	X	X
Fire mains			X	X	X		X	X	
Guttering and downspouts	X	X					X	X	
Oily water			X	X	X				
Scrubber headers	X				X		X		
Seawater lines			X		X		X		
Slurry lines	X						X		
Vent lines	X	X	X	X	X	X		X	X
Water lines	X	X	X		X		X	X	
Waste treatment	X	X	X	X		X	X	X	X
Buried gasoline piping[1]					X				

1. At gasoline service stations.

STANDARDS

The American Society for Testing and Materials (ASTM), American Petroleum Institute (API), British Standard (BS), Deutsche Norm (DIN), and International Organization for Standardization (ISO) publish fiberglass pipe and fittings test methods (see Table D2.2) and standard product specifications (see Table D2.3). The American Society of Mechanical Engineers (ASME) and British Standard publish pressure piping codes (see Table D2.4). Quality fiberglass pipe manufacturers produce products to one or more applicable standards.

TABLE D2.2 Fiberglass Pipe and Fittings Standard Test Methods

	ASTM standards			DIN standards			ISO standards		
Property tested	#	Pipe	Fittings	#	Pipe	Fittings	#	Pipe	Fittings
Beam bending stress & modulus	D 790 modified	Yes	No				ISO 178	Yes	No
Beam deflection, full bore flow	D 2925	Yes	No						
Chemical resistance									
Laminates	C 581	Yes	Yes	53 393	Yes	Yes			
Molding compounds	D 3615	No	Yes						
Pipe, deflected	D 3681	Yes	No						
Circumferential flexural modulus									
Short-term	D 2412	Yes	No	53 769-3	Yes	No	10466	Yes	No
Long-term creep				EN 761	Yes	No	7684	Yes	No
Circumferential tensile strength	D 2290	Yes	No	EN 1393	Yes	No			
Compressive stress & modulus	D 695	Yes	No						
Constituents; % resin, glass, aggregate, filler	D 2584	Yes	No	EN 637	Yes	Yes	7510	Yes	Yes
Dimensions	D 3567	Yes	Yes						
Density	D 792	Yes	Yes	53 479	Yes	Yes			
Dielectric strength	D 149	Yes	Yes						

TABLE D2.2 Fiberglass Pipe and Fittings Standard Test Methods (*Continued*)

Property tested	ASTM standards			DIN standards			ISO standards		
	#	Pipe	Fittings	#	Pipe	Fittings	#	Pipe	Fittings
Electrical resistance, DC	D 257	Yes	Yes						
Indentation hardness, barchol impressor	D 2583	Yes	Yes	EN 59					
Impact resistance	D 2444	Yes	Yes						
Joints, pressure & bending as applicable									
Cemented socket & spigot				EN 1449	Yes	Yes			
Bolted flanges				EN 1450	Yes	Yes			
Socket & spigot with elastomeric seals				EN 1448	Yes	Yes			
Pipe stiffness									
Short-term	D 2412	Yes	No	53 769-3	Yes	No	10466	Yes	No
Long-term creep				EN 761	Yes	No	7684	Yes	No
Pressure, external	D 2924	Yes	No						
Pressure, internal									
Cyclic	D 2143	Yes	No						
Hydrostatic design basis	D 2992	Yes	Yes	53 769-2					
Short-time hydraulic failure	D 1599	Yes	Yes	53 758					
Time to failure, constant pressure	D 1598	Yes	No	EN 1447	Yes	No			
Regression analysis	D 2992	Yes	Yes	53 768	Yes	Yes	10928	Yes	Yes
				EN 705	Yes	Yes			
Ring-bending strain	D 5365	Yes	No						

TABLE D2.2 Fiberglass Pipe and Fittings Standard Test Methods (*Continued*)

Property tested	ASTM standards			DIN standards			ISO standards		
	#	Pipe	Fittings	#	Pipe	Fittings	#	Pipe	Fittings
Shear strength				53 769-1	No	Yes			
Specific gravity	D 792	Yes	Yes						
Stiffness factor									
Short-term	D 2412	Yes	No	53 769-3	Yes	No	10466	Yes	No
Long-term creep				EN 761	Yes	No	7684	Yes	No
Tensile elongation ultimate	D 2105	Yes	No	EN 1393	Yes	No			
Tensile stress & modulus									
Hoop	D 1599	Yes	Yes						
Laminate	D 638	Yes	Yes				527-4	Yes	Yes
Longitudinal	D 2105	Yes	No						
Thermal conductivity	C 177	Yes	Yes						
Thermal expansion, linear coefficient									
Between −30° and 30°C	D 696	Yes	No						
Other temperatures	E 228	Yes	No						

TABLE D2.3 Fiberglass Pipe and Fittings Standard Product Specifications

Product Description	Standard	Pipe	Fittings	Sizes NPS (DN)	Pressure psig (bar)
Fittings					
Contact molded	ASTM D 6041	No	Yes	All	0–150 (0–10)
Dimensions, nominal	ISO 7370	Yes	Yes	1–144 (25–3600)	NA
Flanges, contact molded	ASTM D 5421	No	Yes	1–96 (25–2400)	25–150 (2–10)
Flanges other than contact molded	ASTM D 4024	No	Yes	All	50–500 (3–34)
Gravity flow	ASTM D 3840	No	Yes	8–144 (200–3600)	Gravity
Line pipe, low pressure	API 15LR	Yes	Yes	1–16 (25–400)	up to 1000 (68)
Pressure	ASTM D 5685	No	Yes	1–16 (25–400)	25–1000 (2–68)
Jet fuel lines, belowground	ASTM D 5677	Yes	Yes	All	up to 150 (10)
Joints					
Bell & spigot gasket joints	ASTM D 4161	Yes	Yes	8–144 (200–3600)	up to 250 (17)
Marine pipe & fittings	ASTM F 1173	Yes	Yes	1–48 (25–1200)	All
Laminates, contact molded	ASTM C 582	Yes	Yes	All	All
Pipe					
Casing and tubing	API 15AR	Yes	No	1–10 (25–250)	
Centrifugally cast	ASTM D 2997	Yes	No	All	All
Contact molded	ASTM C 582	Yes	Yes	All	All
Dimensions, nominal	ISO 7370	Yes	Yes	1–144 (10–3600)	NA
Filament wound	ASTM D 2996	Yes	No	1–16 (25–400)	All
Line pipe, high pressure	API 15HR	Yes	No	1–8 (25–200)	500–1000 (34–68)
Line pipe, low pressure	API 15LR	Yes	Yes	1–16 (25–400)	up to 1000 (68)
Machine made classification	ASTM D 2310	Yes	No	NA	NA
Sewer	ASTM D 3262	Yes	No	8–144 (200–3600)	Gravity
Water	ASTM D 3517	Yes	No	8–144 (200–3600)	up to 250 (17)
Industrial wastes & corrosive fluids	ASTM D 3754	Yes	No	8–144 (200–3600)	up to 250 (17)
Process plant piping	BS 6464	Yes	Yes	1–36 (25–1000)	up to 940 (64)
Water supply or sewerage piping	BS 5480	Yes	Yes		
Water systems	AWWA C-950 M45 design manual	Yes	Yes	1–144 (25–3600)	50–250 (3–17)

TABLE D2.4 Fiberglass Pipe and Fittings, Other Standards

Description	Standard
Pressure piping code	
Power piping	ASME B31.1
Process piping	ASME B31.3
British standard, individual plants or sites	BS 7159
Underground installation	ASTM D 6041
	ISO TR 10465-1
Terminology & definitions	ASTM F 412
	ISO 8572
Building services piping	ASME B31.9

RESINS

The resin used in the manufacture of fiberglass pipe, fittings, and adhesives provides for the corrosion resistance of the system. The resin is also used to bond the reinforcing glass together. The glass along with the resin in FRP piping provides for the physical properties of the composite structure. As with the metals used to make pipe, each resin system used in the manufacture of fiberglass pipe has particular strengths and weaknesses.

Custom fiberglass equipment and fiberglass pipe larger than NPS16 (DN 400) are generally made from polyester or vinyl ester resins because of the ease of handling large quantities of this type of resin. Some small-diameter pipe is made from polyester or vinyl ester resins, but most NPS 1 through 16 (DN 25 through 400) pipe are manufactured from epoxy resin systems which are easier to handle in mass-production processes. For special corrosion- or flame-resistant applications outside the capabilities of polyester, vinyl ester, or epoxy resins, pipe made from furan resins or phenolic resins is available.

Epoxy Resins

The chemical resistance and physical properties of an epoxy resin system depend upon both components of the system: the *basic resin* and the *curing or cross-linking agent*. Two general types of epoxy resins are in common usage today: *bisphenol-A epoxies* and *epoxy novolacs*. The bisphenol epoxies are much more widely used because they are more economical and easier to handle during fabrication. The epoxy novolacs are employed where increased temperature resistance and/or better solvent resistance are required. Both types of epoxies can be cured with a great variety of curing agents, and the choice of curing agent has much influence on the properties of the final product. The two most common resin systems used in the manufacture of epoxy fiberglass pipe are bisphenol epoxies cured with aromatic amines and bisphenol epoxies cured with aromatic anhydrides.

In the NPS 1- through 16 (DN 25 through 400) range, bisphenol epoxies cured with aromatic amines produce pipe with the balance of physical, chemical, and economic properties that is needed for most fiberglass piping applications. Pipe made from these resin systems has an upper temperature limit of 250°F (121°C) and is resistant to salt solutions and rather severe alkaline and solvent exposures. Dilute acids are also handled with this type of pipe. If increase solvent resistance is required, an epoxy novolac resin system is recommended.

In the NPS 2- through 16 (DN 50 through 400) range, bisphenol epoxies cured with aromatic anhydrides are used to manufacture pipe for use in oil field and water handling applications where the chemical resistance of an aromatic amine cured epoxy resin is not required. When used within the temperature and chemical limits of the resin system, these pipes give excellent service. These pipes have an upper temperature limit of approximately 150°F (66°C) and are less chemical resistant than pipe made from aromatic amine cured epoxy resin systems. Anhydride-cured resin systems have no resistance to alkaline solutions and are rapidly attacked by water at temperatures above the rated temperature.

Neither of these epoxy resin systems is resistant to strong mineral acids or strong oxidizers.

Polyester Resins

The chemical resistance and physical properties of commercially available polyesters and vinyl esters—a special class of chemical-resistant polyesters—are uniform for a given resin because all of these resins are cured using styrene as the cross-linking agent. When one knows of a successful application of particular polyester or vinyl ester resin, one need not be concerned about the curing agent. During the manufacture of fiberglass pipe, an *initiator* or *catalyst* is added to the styrene-polyester mixture to cause the two components to react and solidify. In almost all chemical services the choice of initiator system is of no consequence. However, the choice of initiator system has been found to affect the chemical resistance of fiberglass pipe in some extremely aggressive chemical services such as hot, wet chlorine, or sodium hypochlorite.

Fiberglass pipe are generally manufactured from any of four types of chemical-resistant polyester resins: vinyl esters and isophthalic, chlorendic, and bisphenol-A fumarate polyesters. Each particular resin has different chemical, physical, and economic properties, and the choice of resin is critical.

Vinyl Ester Resins. Until the development of vinyl ester resins, it was not practical to mass produce small-diameter polyester pipe. Now, however, NPS 1 through 16 (DN 25-400) pipe manufactured from vinyl ester resins is commercially available from several manufacturers. Pipe made from these resins has good physical strength and, in general, better impact strength than other chemical-resistant polyesters. These resins have excellent resistance to oxidizers and strong mineral acids and good resistance to alkaline environments. Standard vinyl esters are limited to 200° to 225°F (93 to 107°C) in most applications, while more costly high-performance vinyl esters are suitable for general use up to 250°F (121°C), and in some special applications have been used in temperatures as high as 350°F (177°C).

Bisphenol-A Fumarate Polyester Resins. The bisphenol-A fumarate polyester is the original high-volume, commercially available, chemical-resistant polyester resin.

This type of resin has been produced for over 35 years and, until the advent of vinyl ester resins, was the resin most widely used in the manufacture of chemical-resistant fiberglass products. The chemical resistance of this type of resin is roughly equivalent to that of vinyl ester resins at temperatures up to 250°F (121°C), but bisphenol-A fumarate resins are more rigid than vinyl esters, and this makes them unsuitable for the manufacture of small-diameter pipe on mass-production equipment. The rigidity of this resin is the major reason for its displacement by vinyl esters from its former position as the most widely used chemical-resistant resin. In large-diameter pipe and large reaction vessels, resin rigidity is not a disadvantage, and this resin is still used in the manufacture of this type equipment, especially when it is to be used in services where this resin has proven successful in past applications.

Chlorendic Polyester Resins. The chlorendic polyester resins have a chlorinated backbone in their molecular structure which makes them particularly well-suited for elevated-temperature applications, up to 350°F (177°C). In most resin classifications there is an increase in rigidity when chemical structure changes are made to give increased temperature performance to the resin. Chlorendic resins follow this general rule and are more rigid than bisphenol-A fumarate resins. The molecular structure of chlorendic resins gives them excellent resistance to concentrated mineral acid and highly oxidizing environments, but poor resistance to alkaline solutions. The solvent resistance of these resins is very good when compared to other polyesters.

Isophthalic Polyester Resins. The isophthalic polyesters are the least expensive and least chemical resistant of the corrosion-resistant polyester resins. For service temperatures up to 180°F (82°C), these resins generally have good resistance to water, dilute acids, and very weak alkaline solutions, and good resistance to petroleum solvents such as gasoline and oil. There are many grades of isophthalic polyester resins. It is important to choose an isophthalic polyester which is compatible with the service being handled.

Other Resins

Furan resins are difficult to work with, and this presently limits their application to systems which require the unique blend of superior acid, alkali, and solvent resistance at temperatures up to 300°F (149°C) offered by these resins. However, furan resins are not suitable for handing oxidizing services.

Phenolic resins also require special processing techniques which limit their economical application to systems that require superior acid and solvent resistance at temperatures to 300°F (149°C). Phenolic resins are often used in flame-resistant duct applications.

MANUFACTURING PROCESSES

Hand Layup

Hand layup or *contact molding* is the simplest method used to make fiberglass pipe and fittings. The part is made over a male mold which forms the inside diameter of the piping component. Glass veil or synthetic nexus is saturated with resin, then applied to the mold, creating a 10 to 20 mil (0.25 to 0.50 mm) thick resin-rich inner surface for the part. This inner liner contains about 90 percent resin and is very corrosion resistant and somewhat abrasion resistant. Most hand layup pipes and fittings have from 50 to 250 mil (1.3 to 6.4 mm) thick corrosion barriers. The corrosion barrier is created by saturating fiberglass mat with resin and then applying it over the resin-rich inner surface. The mat layers contain about 60 percent resin. The corrosion barrier or liner thickness is the total thickness of the veil, nexus, and mat layers. The structural strength of the piping component is created in the reinforced wall of the part. The reinforcement is created by saturating mat or alternating layers of mat and woven roving with resin and applying to the outer surfaces of the corrosion barrier. The number of layers and type of reinforcing glass used depends on the strength requirements for the part. A corrosion barrier can be applied to the outer surface of the part for applications requiring corrosion or abrasion-resistance on the outside diameter.

Hand layup pipe and fittings are typically used in severe or critical applications. As the name implies, hand layup parts are made using manual operations and are usually more expensive than machine-made fiberglass parts. Hand layup parts used for severe and critical applications are also made with up to 10:1 safety factors, which also adds to cost. Hand layup piping is usually provided with plain ends and is joined using butt and wrap joints.

Filament Winding

Filament-wound fiberglass pipe and fittings are machine-made products made on a rotating male mold. The mold forms the inside diameter of the part. Filament-wound parts are made with or without resin-rich interior corrosion barriers. Corrosion barriers are made the same as with the hand layup process but may be applied by hand or by the machine. The reinforced wall for filament-wound pipe and fittings is made by drawing glass roving through a resin bath or with a resin-impregnated tape. The resin-saturated roving or tape is placed on the outside of the corrosion barrier by a fiber placement head (see Figure D2.1a). The fiber placement head

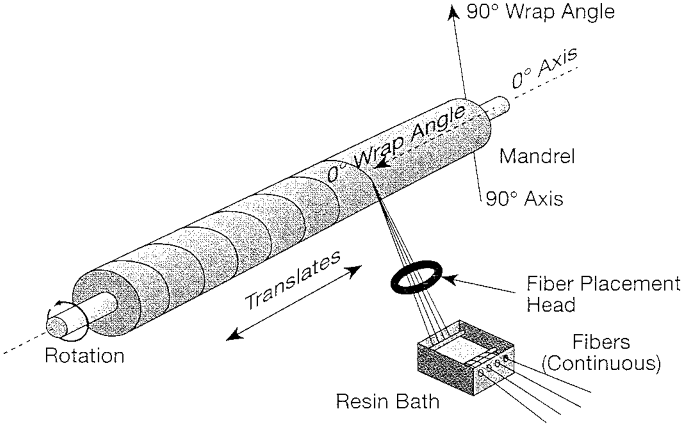

FIGURE D2.1a The filament winding process.

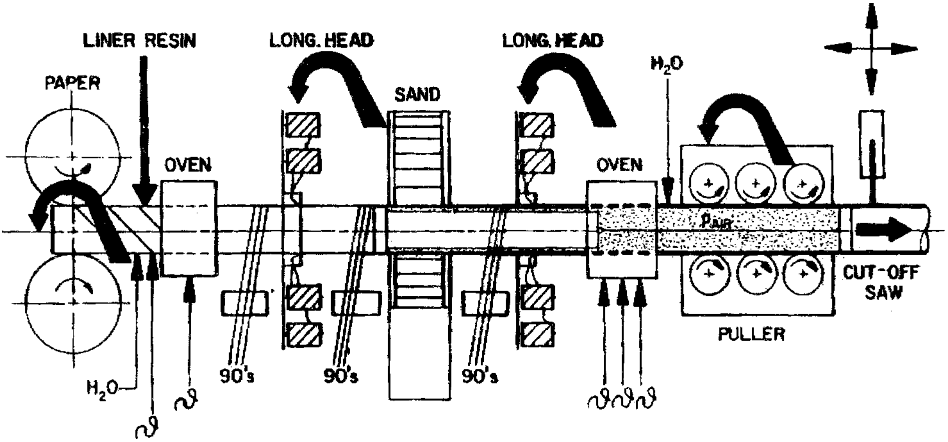

FIGURE D2.1b Continuous filament winding process.

travels in relation to the rotating mold to properly position the reinforcement on the part. The roving or tape-on filament-wound pipe is usually placed on the part at a helical angle. This angle is normally optimized for maximum internal pressure ratings but may be changed for improved pipe stiffness, axial strength, or unsupported span spacing. The number of layers of reinforcement used on filament wound parts is determined by the strength requirements for the part. A barrier can be added to the exterior of filament-wound products for corrosion or abrasion protection.

Another manufacturing process, known as the *continuous filament winding process,* is used for some fiberglass piping products. The advantages of this process are that the pipe is produced continuously and glass angles can be changed to optimize strength (see Fig. D2.1b). The longitudinal glass heads rotate around the tube passing through the center, which is also rotating. Changing one or both speeds of rotation and the rate at which the tube is travelling will change the angle at which the glass is applied. Typically, the goal is to apply the glass nearly longitudinally as this best utilizes the high tensile strength of the glass. The circumferential glass is applied at fixed stations with an application angle of approximately 87°. Glass applied circumferentially will optimize the hoop strength of the pipe as, again, the high tensile strength of the glass is best utilized. The number of longitudinal and circumferential layers can be changed as well to produce a product which has high hoop strength, with more circumferential layers, or longitudinal strength, with more longitudinal layers.

Filament-wound pipe and fittings are used in a broad range of applications. Filament-wound pipe is available with thin walls suitable for light duty applications through very heavy walls suitable for severe or critical applications. The installed cost of filament-wound pipe and fittings can be competitively priced against many metallic and thermoplastic piping systems required in difficult piping applications. Filament-wound pipe and fittings are available with the complete range of joining methods.

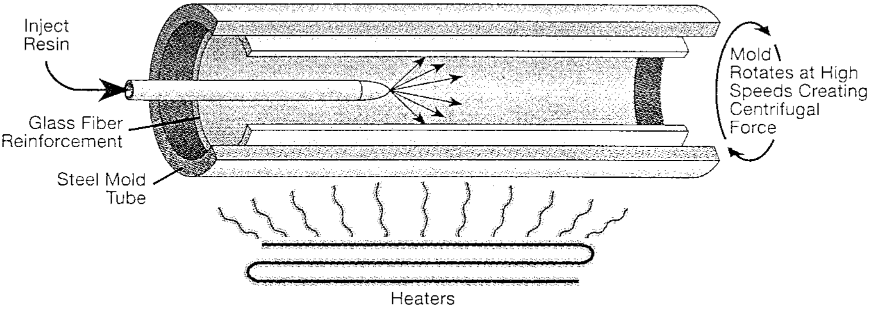
Inject Resin
Glass Fiber Reinforcement
Steel Mold Tube
Mold Rotates at High Speeds Creating Centrifugal Force
Heaters

FIGURE D2.2 The centrifugal casting process.

Centrifugal Casting

Centrifugal casting is used to make both glass-fiber-reinforced thermosetting resin pipe and glass-fiber-reinforced plastic mortar pipe. Centrifugal casting is not used to make fiberglass fittings. In the centrifugal casting process the pipe is made inside a steel mold tube which can be rotated at high speeds, creating significant centrifugal force (see Fig. D2.2), Glass-fiber-reinforced thermosetting resin pipe is made by first positioning fiberglass fabrics in the mold tube. The mold is then rotated while a controlled amount of resin is injected into the tube. The very high centrifugal forces of the spinning tube drive the resin through the glass fibers and displace any air in the fibers. Excess resin is injected into the tube which forms a pure resin corrosion and abrasion barrier on the pipe inside diameter. The mold is heated, which aids in the cure of the pipe. A corrosion barrier can be added to the outer surface of the pipe if required for the application.

Centrifugal cast glass-fiber-reinforced thermosetting resin pipe is used in a broad range of applications. It is available with medium walls suitable for moderate applications to heavy walls suitable for severe or critical applications. The installed cost of centrifugal cast pipe can be competitively priced against many metallic and thermosetting piping systems required in difficult piping applications. Centrifugally cast glass-fiber-reinforced thermosetting resin pipe is typically joined with straight socket adhesive, flanged, butt and wrap, threaded, or mechanical joints.

Centrifugal cast glass-fiber-reinforced plastic mortar pipe is made by dispensing a silica and resin mortar mix into a rotating mold tube. The mortar mix creates the reinforced wall of the pipe. The corrosion liner is created by dispensing a mixture of chopped glass and resin into the inside diameter of the resin mortar mix.

Centrifugal cast glass fiber reinforced plastic mortar pipe is used mainly in buried applications but can be used above grade. Mortar pipe has excellent hoop and axial compressive strength, which makes it ideal for tunneling applications. Centrifugal cast glass-fiber-reinforced plastic mortar pipe is typically joined with mechanical joints. Flanged and butt and wrap joints are also available.

Press Molded

Press molding is used to make fittings but not pipe. In this process a mixture of resin, chopped glass, and fillers, called *premix,* is placed in matched metal mold.

The mold is usually closed by a hydraulic press which forces the premix to take the shape of the mold. The mold is heated to accelerate the cure of the part.

Since press molding of fittings is highly automated, press-molded fittings are usually lower in cost than fittings made by other methods. Press-molded fittings can be very corrosion-resistant but typically have heavy walls to achieve desired physical strength. Press-molded fittings are available with bell and spigot, straight socket, and flanged joints.

Resin Transfer Molding

Resin transfer molding is used to make fiberglass fittings only. Resin transfer molded fittings are made by placing glass, veil, and nexus into a mold. After the mold is closed, resin is injected into the mold and cured. Resin transfer molding applications include the outer shell for double contained fiberglass piping systems.

Mitered

Special, low-volume, and large-diameter fiberglass fittings are often made from mitered pipe. The mitered pipe is joined with a butt and wrap joint to form the fitting. Mitered fittings are typically provided with plain ends for butt and wrap joints.

JOINING SYSTEMS

Fiberglass piping is available with a wide range of joining systems to fit the particular application. Available are bell and spigot joints, straight-socket joints, flanged joints, butt wrap joints (also known as butt and strap joints), O-ring joints, bell and spigot joints, threaded joints, and mechanical joints. See Fig. D2.3.

Bell and Spigot Joint

Tapered bell and spigot joints are available in all sizes of fiberglass piping. They include a matched taper for an interference fit which gives a very high strength, thin glue line. The joints are adhesively bonded, usually with a two-part adhesive which is supplied by the piping manufacturer. Tapered bell and spigot joints are used in both low- and high-pressure applications. These joints are typically stronger in pressure and axial tensile capability than the pipe being joined. Bell and spigot joints do require field tapering of joints which are used in less than full length. Specialized field tapering tools are available from the pipe manufacturers. A special type of threaded and bonded tapered bell and spigot joint is also available. The threads in the tapered interference joint are used to hold the joint together during the cure time. This type of joint is claimed to be highly reliable.

Straight-Socket Adhesive Joints

Straight-socket adhesive joints are available (in sizes from NPS 1 through 16 (DN 25 through 400). Some manufacturers limit these joints to NPS 14 (DN 350). The

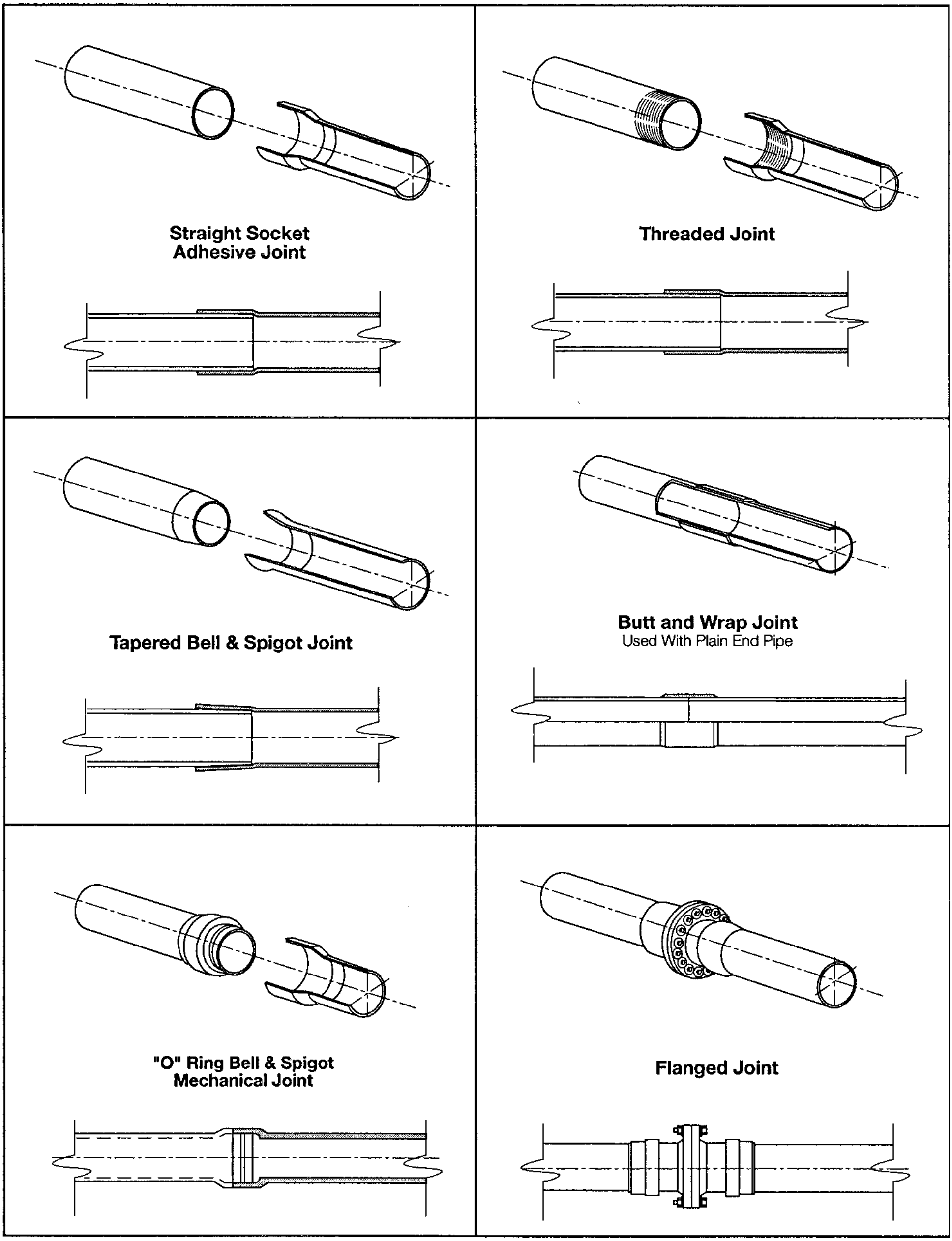
Straight Socket Adhesive Joint
Threaded Joint
Tapered Bell & Spigot Joint
Butt and Wrap Joint
Used With Plain End Pipe
"O" Ring Bell & Spigot Mechanical Joint
Flanged Joint

FIGURE D2.3 Fiberglass pipe joining systems.

socket in the fitting is essentially straight but may include a slight taper for centering purposes. This type of joint is adhesively bonded. A land in the bottom of each fitting used in this type of piping system ensures accurate laying lengths and close-tolerance piping. Adhesively bonded straight-socket joints are typically stronger in pressure and axial tensile capabilities than the fittings in the piping system.

Flanged Joint

Flanged joints are available in all fiberglass pipe sizes. The flanges are available with industry standard bolt patterns such as ANSI, DIN, ISO, or JSI bolt patterns. Flanges are typically used to connect to other piping systems and equipment or for piping systems which must be opened for inspection or cleaning. Fiberglass flanges are also available in vanstone style.

Butt and Wrap Joint

Butt and wrap joints are available in all sizes of fiberglass piping. Butt and wrap joints are used almost exclusively in hand lay-up piping systems or in filament-wound piping systems larger than NPS 14 (DN 350) or NPS 16 (DN 400), depending upon manufacturer. A butt and wrap joint is used to join two pieces of plain-end pipe or a pipe and fitting. The joint is made by first placing a corrosion barrier, similar to the corrosion barrier used in the pipe and fittings, on the interior or exterior of the pipe. After the corrosion barrier is formed, the mechanical strength of the system is ensured by using saturated reinforcement which is laid up out of mat and woven roving.

O-Ring Bell and Spigot Joint

O-ring bell and spigot joints are available in NPS 14 (DN 350) and larger sizes of filament-wound pipe and all sizes of polymer concrete pipe. O-ring and bell and spigot joints do require restraining the pipe from axial loads, therefore, it is used mostly for buried pipe. O-ring bell and spigot joints are quick and easy to install, but there is a limited availability of fittings in this style of joint.

Threaded Joint

Threaded joints are available in API eight round and ten round EUE (External Upset) and NPT (Nominal Pipe Taper) threads. The EUE threads are available in 1½ through 7 in nominal sizes and are mainly used for high-pressure line pipe and downhole tubing. The 8 round and 10 round threads conform to API standard B. Fittings are available with the EUE threads for couplings, flanges, elbows, tees, crosses, plugs, and adapters only. NPT threads are typically available in NPS 1 to 6 (DN 25 to 150) sizes. Pressure is limited to 450 psi (3105 kPa) depending on the pipe size. Threaded adaptors for NPT threads are readily available. There are also special coarse threads available on some fiberglass piping systems for quick makeup.

Mechanical Joint

Mechanical joints using O-rings for sealing purposes are available in NPS 2 (DN 50) through NPS 36 (DN 900). One type of mechanical joint uses a retainer pin made of either metal cable or thermoplastic rod to retain the axial loads. Also available are mechanical joints which use coarse threads to retain the axial loads. The mechanical joint with threads is fully reusable.

RESISTANT PROPERTIES

Chemical Resistance

The chemical resistance and life expectancy of fiberglass piping systems is dependent on many factors including type of resin, curing agent, liner material, liner thickness, fillers, and cure profiles. When assessing the suitability of a system, the chemical resistance of the pipe, fittings, and joining materials must be considered. With all of the above variables to consider, the piping manufacturer should be contacted for recommendations for specific applications. The piping manufacturer will need to have the following information for their evaluation.

- Chemicals and concentrations
- Temperatures, operating and upset
- Frequency of use
- Other factors which may determine suitability for use:

  Spills or upsets

  Low or static flow in dilute solvent lines

  Mixing of chemicals which may react in the line

  Steam cleaning

  Abrasives

Table D2.5 is provided as a preliminary guideline only. The temperature ratings range shown is compiled from published information from several manufacturers.

Abrasion Resistance

Fiberglass piping systems with typical corrosion barriers are somewhat abrasion resistant. They can typically handle slurries with particle sizes less than 100 mesh (150 micron) at fluid velocity below 6 ft/sec (1.8 meter/sec). The abrasion resistance can be improved by adding fillers such as fine silica, silicon carbide, or ceramic to the piping's interior or exterior barriers. Table D2.6 shows the ability of different resins and abrasion-resistant additives to resist surface wear. (The lower the wear index, the better is the resistance to wear.) Wear resistance of fiberglass fittings can be improved by using long-radius fittings.

TABLE D2.5 Maximum Temperature Ratings Range by Chemical and Resin Class

Service/Fluid		Epoxy	Vinyl ester	Novolac VE	Furan	Isophthalic
Acetic acid	°F	75–100	100–210	150–215	225	170
	°C	24–93	38–99	66–102	107	77
Acetone	°F	75–180	125–150	100–200	AMB	NR
	°C	24–82	52–66	38–93	AMB	NR
Acrylic acid	°F	100–120	75–100	100–100	NT	NR
	°C	38–49	24–38	38–38	NT	NR
Adipic acid	°F	225–250	75–200	100–210	NT	NL
	°C	107–121	24–93	38–99	NT	NL
Air	°F	210–300	200–360	225–450	NL	NL
	°C	99–149	93–182	107–232	NL	NL
Alcohol-ethyl	°F	120–180	75–150	80–150	NT	NL
	°C	49–82	24–66	27–66	NT	NL
Alcohol, isopropyl	°F	100–180	80–150	100–150	NT	NL
	°C	38–82	27–66	38–66	NT	NL
Alcohol-methyl	°F	75–150	100–150	100–150	NT	NL
	°C	24–66	38–66	38–66	NT	NL
Alcohol-methyl isobutyl	°F	100–150	100–150	120–150	NT	NL
	°C	38–66	38–66	49–66	NT	NL
Alcohol, secondary butyl	°F	100–175	120–150	120–150	NT	NL
	°C	38–79	49–66	49–66	NT	NL
Allyl chloride	°F	75–120	80	75–80	NL	NR
	°C	24–49	27	24–27	NL	NR
Aluminum chloride	°F	150–300	180–210	210–250	250	170
	°C	66–149	82–99	99–121	121	77
Aluminum fluoride	°F	75–150	70–85	70–85	225	NR
	°C	24–66	21–29	21–29	107	NR
Aluminum hydroxide	°F	150–200	80–180	175–180	225	NL
	°C	66–93	27–82	79–82	107	NL
Aluminum nitrate	°F	150–250	125–200	160–225	NT	140
	°C	66–121	52–93	71–107	NT	60
Aluminum sulfate	°F	210–300	160–210	210–250	250	170
	°C	99–149	71–99	99–121	121	77

TABLE D2.5 Maximum Temperature Ratings Range by Chemical and Resin Class (*Continued*)

Service/Fluid		Epoxy	Vinyl ester	Novolac VE	Furan	Isophthalic
Alums	°F	225–300	210	210–250	NT	170
	°C	107–149	99	99–121	NT	77
Ammonia gas, dry	°F	150–225	80–100	100	250	NL
	°C	66–107	27–38	38	121	NL
Ammonia gas, wet	°F	125–150	100	100	NT	NR
	°C	52–66	38	38	NT	NR
Ammonium carbonate	°F	150–250	75–150	150	225	80
	°C	66–96	24–66	66	107	27
Ammonium chloride	°F	150–270	180–210	210–224	220	170
	°C	66–132	82–99	99–107	104	77
Ammonium fluoride	°F	75–150	85–150	150	225	NL
	°C	24–66	29–66	66	107	NL
Ammonium hydroxide	°F	100–200	100–180	100–150	180	NR
	°C	38–93	38–82	38–66	82	NR
Ammonium nitrate	°F	200–250	150–200	200–250	220	140
	°C	93–121	66–93	93–121	104	60
Ammonium persulfate	°F	100–250	170	180	180	NR
	°C	38–121	77	82	82	NR
Ammonium phosphate	°F	150–200	75–200	210	190	140
	°C	66–93	24–93	99	88	60
Ammonium sulfate	°F	200–300	120–210	210–250	220	170
	°C	93–149	49–99	99–121	104	77
Amyl acetate	°F	75–120	NL	80–120	200	NR
	°C	24–49	NL	27–49	93	NR
Amyl chloride	°F	100	120	120	NR	NR
	°C	38	49	49	NR	NR
Aniline	°F	75–100	100–120	70	250	NR
	°C	24–38	38–49	21	121	NR
Antimony chloride	°F	NR	200–210	NR	225	NR
	°C	NR	93–99	NR	107	NR
Antimony trichloride	°F	150–220	NR	200–200	NR	NR
	°C	66–104	NR	93–93	NR	NR

TABLE D2.5 Maximum Temperature Ratings Range by Chemical and Resin Class (*Continued*)

Service/Fluid		Epoxy	Vinyl ester	Novolac VE	Furan	Isophthalic
Barium carbonate	°F	200–250	180–210	210–250	NT	80
	°C	93–121	82–99	99–121	NT	27
Barium chloride	°F	210–250	180–210	210	200	170
	°C	99–121	82–99	99	93	77
Barium hydroxide	°F	180–220	100–200	150–200	200	NR
	°C	82–104	38–93	66–93	93	NR
Barium sulfate	°F	210–250	200–210	210–250	NT	170
	°C	99–121	93–99	99–121	NT	77
Barium sulfide	°F	210–300	150–200	180–215	150	NR
	°C	99–149	66–93	82–102	66	NR
Beer	°F	200–225	90–200	120–200	NT	80
	°C	93–107	32–93	49–93	NT	27
Benzene	°F	100–150	75	100	NT	NR
	°C	38–66	24	38	NT	NR
Benzene sulfonic acid	°F	100–220	125–200	125–215	200	NR
	°C	38–104	52–93	52–102	93	NR
Benzoic acid	°F	100–220	150–210	210	250	170
	°C	38–104	66–99	99	121	77
Black liquor (pulp mill)	°F	100–225	150–180	180–225	NL	NR
	°C	38–107	66–82	82–107	NL	NR
Borax	°F	225–250	200–210	210	NL	170
	°C	107–121	93–99	99	NL	77
Boric acid	°F	200–225	180–210	200–210	200	170
	°C	93–107	82–99	93–99	93	77
Bromic acid	°F	150	NL	150	NT	NL
	°C	66	NL	66	NT	NL
Bromine water	°F	100–150	100	100–190	NT	NL
	°C	38–66	38	38–88	NT	NL
Butadiene, gas	°F	100–150	100	100	NT	NL
	°C	38–66	38	38	NT	NL
Butane, gas	°F	75–150	100	100	NL	NL
	°C	24–66	38	38	NL	NL

TABLE D2.5 Maximum Temperature Ratings Range by Chemical and Resin Class (*Continued*)

Service/Fluid		Epoxy	Vinyl ester	Novolac VE	Furan	Isophthalic
Butyl acetate	°F	AMB–150	NL	80	220	NR
	°C	AMB–66	NL	27	104	NR
Butyl cellosolve	°F	150	100	100	NT	NR
	°C	66	38	38	NT	NR
Butyric acid	°F	150–200	80–210	120–210	200	80
	°C	66–93	27–99	49–99	93	27
Calcium bisulfite	°F	200–270	180–200	180 180 180	NL	140
	°C	93–132	82–93	82 82 82	NL	60
Calcium carbonate	°F	150–300	100–200	180–200	NT	160
	°C	66–149	38–93	82–93	NT	71
Calcium chlorate	°F	150–200	100–210	210–250	NT	150
	°C	66–93	38–99	99–121	NT	66
Calcium chloride	°F	210–300	200–210	215–250	250	170
	°C	99–149	93–99	102–121	121	77
Calcium hydroxide	°F	150–200	100–180	150–210	225	NL
	°C	66–93	38–82	66–99	107	NL
Calcium hypochlorite	°F	100–150	100–200	150–180	NT	NR
	°C	38–66	38–93	66–82	NT	NR
Calcium nitrate	°F	150–250	125–210	210–215	220	170
	°C	66–121	52–99	99–102	104	77
Calcium sulfate	°F	200–250	200–210	210–250	250	170
	°C	93–121	93–99	99–121	121	77
Carbon dioxide gas	°F	225–250	200–210	200–350	NT	NL
	°C	107–121	93–99	93–177	NT	NL
Carbon tetrachloride	°F	100–150	90–180	125–200	225	NR
	°C	38–66	32–82	52–93	107	NR
Carbonic acid	°F	150–180	175	NL	NL	NL
	°C	66–82	79	NL	NL	NL
Castor oil	°F	200–225	150	160–210	NT	NL
	°C	93–107	66	71–99	NT	NL

TABLE D2.5 Maximum Temperature Ratings Range by Chemical and Resin Class (*Continued*)

Service/Fluid		Epoxy	Vinyl ester	Novolac VE	Furan	Isophthalic
Chlorine dioxide gas	°F	75	80–200	180–210	150	NR
	°C	24	27–93	82–99	66	NR
Chlorine gas	°F	125	200–210	210–250	225	NR
	°C	52	93–99	99–121	107	NR
Chloroacetic acid	°F	100–200	75–200	100–135	NT	NR
	°C	38–93	24–93	38–57	NT	NR
Chromic acid	°F	75–150	80–200	90–150	NT	NL
	°C	24–66	27–93	32–66	NT	NL
Chromic fluoride	°F	75	75	75	NL	NL
	°C	24	24	24	NL	NL
Citric acid	°F	200–250	200–210	210–215	190	160
	°C	93–121	93–99	99–102	88	71
Copper chloride	°F	150–250	150–210	210–250	250	170
	°C	66–121	66–99	99–121	121	77
Copper fluoride	°F	200–250	175–200	175–210	NT	NR
	°C	93–121	79–93	79–99	NT	NR
Copper nitrate	°F	150–250	100–210	210–215	220	170
	°C	66–121	38–99	99–102	104	77
Copper sulfate	°F	150–250	150–210	210–250	250	170
	°C	66–121	66–99	99–121	121	77
Crude oil	°F	210–250	200–210	210–250	NL	170
	°C	99–121	93–99	99–121	NL	77
Deionized water	°F	212	180	180–210	NL	170
	°C	100	82	82–99	NL	77
Dichlorobenzene (ortho)	°F	100–150	NL	120	220	NR
	°C	38–66	NL	49	104	NR
Diesel fuel	°F	210–250	150–180	190–225	NL	140
	°C	99–121	66–82	88–107	NL	60
Ethyl acetate	°F	75–150	NL	70	125	NR
	°C	24–66	NL	21	52	NR
Ethyl cellosolve	°F	100–150	NL	NR	NT	NL
	°C	38–66	NL	NR	NT	NL

TABLE D2.5 Maximum Temperature Ratings Range by Chemical and Resin Class (*Continued*)

Service/Fluid		Epoxy	Vinyl ester	Novolac VE	Furan	Isophthalic
Ethyl chloride	°F	75–80	NL	80	220	NR
	°C	24–27	NL	27	104	NR
Ethylene glycol	°F	200–270	200–210	210–225	250	170
	°C	93–132	93–99	99–107	121	77
Fatty acids	°F	200–225	200–210	210–250	250	170
	°C	93–107	93–99	99–121	121	77
Ferric chloride	°F	150–300	150–210	210–225	250	170
	°C	66–149	66–99	99–107	121	77
Ferric nitrate	°F	150–250	150–200	210–215	250	170
	°C	66–121	66–93	99–102	121	77
Ferric sulfate	°F	200–225	200–210	210–215	225	170
	°C	93–107	93–99	99–102	107	77
Ferrous chloride	°F	175–250	165–210	210–225	NT	170
	°C	79–121	74–99	99–107	NT	77
Ferrous sulfate	°F	200–225	200–210	210–215	NT	170
	°C	93–107	93–99	99–102	NT	77
Fluorine gas	°F	75	75–80	75–80	265	NL
	°C	24	24–27	24–27	129	NL
Fluoboric acid	°F	200	180–210	190–210	200	150
	°C	93	82–99	88–99	93	66
Fluosilicic acid	°F	100–200	80–200	80–210	200	NR
	°C	38–93	27–93	27–99	93	NR
Formaldehyde	°F	75–150	75–150	75–260	225	NR
	°C	24–66	24–66	24–127	107	NR
Formic acid	°F	100–140	75–180	100–180	225	100
	°C	38–60	24–82	38–82	107	38
Freon	°F	75–150	75–80	75–100	225	NL
	°C	24–66	24–27	24–38	107	NL
Gas, natural	°F	200–225	180–200	200–210	260	NL
	°C	93–107	82–93	93–99	127	NL
Gasoline	°F	150–225	100–180	100–180	NL	110
	°C	66–107	38–82	38–82	NL	43

TABLE D2.5 Maximum Temperature Ratings Range by Chemical and Resin Class (*Continued*)

Service/Fluid		Epoxy	Vinyl ester	Novolac VE	Furan	Isophthalic
Glucose	°F	200–250	200–210	210–250	NL	110
	°C	93–121	93–99	99–121	NL	43
Glycerine	°F	210–300	200–210	210	NL	170
	°C	99–149	93–99	99	NL	77
Glycol ethylene	°F	200	200	210	NL	NL
	°C	93	93	99	NL	NL
Heptane	°F	150–200	150–210	200–210	250	140
	°C	66–93	66–99	93–99	121	60
Hexane	°F	75–150	100–160	150–160	150	NL
	°C	24–66	38–71	66–71	66	NL
Hexylene glycol alcohol	°F	150	150	150	NL	NL
	°C	66	66	66	NL	NL
Hydraulic fluid	°F	200–225	100–180	180–195	NT	NR
	°C	93–107	38–82	82–91	NT	NR
Hydrobromic acid	°F	100–150	100–180	100–180	NT	NL
	°C	38–66	38–82	38–82	NT	NL
Hydrochloric acid	°F	75–200	75–200	165–230	150	110
	°C	24–93	24–93	74–110	66	43
Hydrocyanic acid	°F	120	150–210	210	200	80
	°C	49	66–99	99	93	27
Hydrofluoric acid	°F	75	100–150	100–150	NT	NR
	°C	24	38–66	38–66	NT	NR
Hydrogen peroxide	°F	80–150	100–150	75–150	NT	NR
	°C	27–66	38–66	24–66	NT	NR
Hydrogen sulfide	°F	150–250	150–180	175–210	NL	140
	°C	66–121	66–82	79–99	NL	60
Hypochlorous acid	°F	120–200	150–180	135–180	NT	NL
	°C	49–93	66–82	57–82	NT	NL
Jet fuel	°F	150–250	120–180	180	NT	140
	°C	66–121	49–82	82	NT	60
Kerosene	°F	150–250	150–200	175–180	NT	140
	°C	66–121	66–93	79–82	NT	60

TABLE D2.5 Maximum Temperature Ratings Range by Chemical and Resin Class (*Continued*)

Service/Fluid		Epoxy	Vinyl ester	Novolac VE	Furan	Isophthalic
Lactic acid	°F	200–225	125–210	210–215	225	130
	°C	93–107	52–99	99–102	107	54
Lauric acid	°F	200–225	125–200	175–215	NT	NL
	°C	93–107	52–93	79–102	NT	NL
Lead acetate	°F	150–250	150–210	210–230	NT	110
	°C	66–121	66–99	99–110	NT	43
Levulinic acid	°F	200–250	200–210	215–230	225	NL
	°C	93–121	93–99	102–110	107	NL
Magnesium carbonate	°F	150–250	150–200	180–200	NL	130
	°C	66–121	66–93	82–93	NL	54
Magnesium chloride	°F	210–270	200–210	225–250	NL	140
	°C	99–132	93–99	107–121	NL	60
Magnesium hydroxide	°F	120–270	125–200	210–215	NL	NL
	°C	49–132	52–93	99–102	NL	NL
Magnesium nitrate	°F	210–300	200–210	210–225	NT	170
	°C	99–149	93–99	99–107	NT	77
Magnesium sulfate	°F	150–270	200–210	210–250	200	150
	°C	66–132	93–99	99–121	93	66
Maleic acid	°F	150–220	200–210	200–250	200	140
	°C	66–104	93–99	93–121	93	60
Mercury	°F	225–270	200–210	210–250	NT	170
	°C	107–132	93–99	99–121	NT	77
Methyl ethyl ketone	°F	75–150	NL	75–125	150	NR
	°C	24–66	NL	24–52	66	NR
Methyl isobutyl carbitol	°F	100–120	NL	NL	NT	NL
	°C	38–49	NL	NL	NT	NL
Methyl isobutyl ketone	°F	100–150	NL	NL	NL	NL
	°C	38–66	NL	NL	NL	NL
Mineral oil	°F	210–270	120	NL	NL	170
	°C	99–132	49	NL	NL	77
Monochlorobenzene	°F	100–150	NL	NL	NL	NR
	°C	38–66	NL	NL	NL	NR

TABLE D2.5 Maximum Temperature Ratings Range by Chemical and Resin Class (*Continued*)

Service/Fluid		Epoxy	Vinyl ester	Novolac VE	Furan	Isophthalic
Naphtha	°F	200–250	125–180	120–210	NT	110
	°C	93–121	52–82	49–99	NT	43
Naphthalene	°F	150–200	100–210	190–210	NL	130
	°C	66–93	38–99	88–99	NL	54
Nickel chloride	°F	210–300	200–210	210–215	220	140
	°C	99–149	93–99	99–102	104	60
Nickel nitrate	°F	200–250	200–210	210–215	220	140
	°C	93–121	93–99	99–102	104	60
Nitric acid	°F	75–120	75–200	120–215	NT	150
	°C	24–49	24–93	49–102	NT	66
Oleic acid	°F	200–225	100–210	200–210	NL	170
	°C	93–107	38–99	93–99	NL	77
Oxalic acid	°F	150–250	120–200	120–215	150	170
	°C	66–121	49–93	49–102	66	77
Perchloric acid	°F	75	75–150	75–150	NT	NR
	°C	24	24–66	24–66	NT	NR
Phenol	°F	75–150	100–150	75–150	NL	NR
	°C	24–66	38–66	24–66	NL	NR
Phosphoric acid	°F	75–225	100–210	210–225	250	170
	°C	24–107	38–99	99–107	121	77
Phosphoric pentoxide	°F	100–200	200	210	NL	NL
	°C	38–93	93	99	NL	NL
Picric acid	°F	75–100	100	100–205	165	NR
	°C	24–38	38	38–96	74	NR
Potassium bicarbonate	°F	150–270	100–180	100–180	NL	NL
	°C	66–132	38–82	38–82	NL	NL
Potassium bromide	°F	200–225	100–200	120–215	200	150
	°C	93–107	38–93	49–102	93	66
Potassium carbonate	°F	100–250	110–180	120–180	200	80
	°C	38–121	43–82	49–82	93	27
Potassium chloride	°F	210–300	200–210	210–215	250	170
	°C	99–149	93–99	99–102	121	77

TABLE D2.5 Maximum Temperature Ratings Range by Chemical and Resin Class (*Continued*)

Service/Fluid		Epoxy	Vinyl ester	Novolac VE	Furan	Isophthalic
Potassium dichromate	°F	200–250	200–210	210	NT	170
	°C	93–121	93–99	99	NT	77
Potassium hydroxide	°F	100–200	100–180	150–180	220	NR
	°C	38–93	38–82	66–82	104	NR
Potassium nitrate	°F	200–300	200–210	210–215	250	170
	°C	93–149	93–99	99–102	121	77
Potassium sulfate	°F	210–270	180–210	210–215	250	170
	°C	99–132	82–99	99–102	121	77
Propane	°F	75–150	100–200	200	NL	NL
	°C	24–66	38–93	93	NL	NL
Silicic acid	°F	200–250	125–200	200–210	NT	170
	°C	93–121	52–93	93–99	NT	77
Silver nitrate	°F	150–250	150–210	210	NL	170
	°C	66–121	66–99	99	NL	77
Soaps	°F	200–250	150–200	210	NL	NL
	°C	93–121	66–93	99	NL	NL
Sodium acetate	°F	150–250	150–210	210–215	225	170
	°C	66–121	66–99	99–102	107	77
Sodium bicarbonate	°F	200–275	100–180	170–180	225	100
	°C	93–135	38–82	77–82	107	38
Sodium bisulfate	°F	150–250	150–210	210–215	225	170
	°C	66–121	66–99	99–102	107	77
Sodium bromide	°F	200–250	200–210	210–215	NL	170
	°C	93–121	93–99	99–102	NL	77
Sodium carbonate	°F	100–205	100–180	180	NL	NR
	°C	38–96	38–82	82	NL	NR
Sodium chlorate	°F	180–250	180–210	210–215	NT	NR
	°C	82–121	82–99	99–102	NT	NR
Sodium chloride	°F	210–300	200–210	210–250	250	130
	°C	99–149	93–99	99–121	121	54
Sodium cyanide	°F	225–250	150–210	210	225	80
	°C	107–121	66–99	99	107	27

TABLE D2.5 Maximum Temperature Ratings Range by Chemical and Resin Class (*Continued*)

Service/Fluid		Epoxy	Vinyl ester	Novolac VE	Furan	Isophthalic
Sodium dichromate	°F	200–250	200–210	210	NT	140
	°C	93–121	93–99	99	NT	60
Sodium ferrocyanide	°F	200–300	150–210	210–215	NL	170
	°C	93–149	66–99	99–102	NL	77
Sodium fluoride	°F	150–250	150–180	150–180	250	80
	°C	66–121	66–82	66–82	121	27
Sodium hydroxide	°F	100–200	100–210	150–180	212	NR
	°C	38–93	38–99	66–82	100	NR
Sodium hypochlorite	°F	75	75–180	110–180	NT	NR
	°C	24	24–82	43–82	NT	NR
Sodium nitrate	°F	200–300	200–210	210–215	225	170
	°C	93–149	93–99	99–102	107	77
Sodium phosphate	°F	200	200–210	210	250	NL
	°C	93	93–99	99	121	NL
Sodium silicate	°F	150–220	160–210	210–215	250	80
	°C	66–104	71–99	99–102	121	27
Sodium sulfate	°F	200–300	200–210	210–215	220	170
	°C	93–149	93–99	99–102	104	77
Sodium sulfite	°F	200	200–210	210–215	NL	80
	°C	93	93–99	99–102	NL	27
Sodium thiosulfate	°F	150	150–200	180	NL	140
	°C	66	66–93	82	NL	60
Stannic chloride	°F	150–270	150–210	210	NL	170
	°C	66–132	66–99	99	NL	77
Stearic acid	°F	150–225	150–210	210–215	NL	170
	°C	66–107	66–99	99–102	NL	77
Sulfamic acid	°F	100–150	100–210	150–210	NL	110
	°C	38–66	38–99	66–99	NL	43
Sulfite liquor	°F	150	200	200	225	NL
	°C	66	93	93	107	NL
Sulfur dioxide	°F	150–250	120–210	225–250	250	NL
	°C	66–121	49–99	107–121	121	NL

TABLE D2.5 Maximum Temperature Ratings Range by Chemical and Resin Class (*Continued*)

Service/Fluid		Epoxy	Vinyl ester	Novolac VE	Furan	Isophthalic
Sulfuric acid	°F	75–205	75–210	120–215	225	170
	°C	24–96	24–99	49–102	107	77
Sulfurous acid	°F	75–200	80–150	100–150	200	NL
	°C	24–93	27–66	38–66	93	NL
Tannic acid	°F	200–225	100–210	100–210	NT	170
	°C	93–107	38–99	38–99	NT	77
Tartaric acid	°F	150–250	200–210	210	250	170
	°C	66–121	93–99	99	121	77
Toluene	°F	100–150	75–80	75–120	225	NR
	°C	38–66	24–27	24–49	107	NR
Trichloroethylene	°F	120–150	NL	NL	NL	NR
	°C	49–66	NL	NL	NL	NR
Triethanolamine	°F	100–150	100–120	120	NL	110
	°C	38–66	38–49	49	NL	43
Trisodium phosphate	°F	100–200	100–210	210–250	NL	120
	°C	38–93	38–99	99–121	NL	49
Tung oil	°F	200	100	200	NL	NL
	°C	93	38	93	NL	NL
Turpentine	°F	100–150	150	100–210	NL	NR
	°C	38–66	66	38–99	NL	NR
Urea	°F	150–200	150	150	225	120
	°C	66–93	66	66	107	49
Vinegar	°F	150–200	NL	210	NL	150
	°C	66–93	NL	99	NL	66
Vinyl acetate	°F	75–150	150–210	NR	NL	NR
	°C	24–66	66–99	NR	NL	NR
Water	°F	200–250	175–200	180–210	NL	160
	°C	93–121	79–93	82–99	NL	71
Water, sea	°F	210–270	175–200	210	NL	170
	°C	99–132	79–93	99	NL	77
Xylene	°F	125–150	75–80	75–120	225	NR
	°C	52–66	24–27	24–49	107	NR

TABLE D2.5 Maximum Temperature Ratings Range by Chemical and Resin Class (*Continued*)

Service/Fluid		Epoxy	Vinyl ester	Novolac VE	Furan	Isophthalic
Zinc chloride	°F	210–250	200	200–310	NL	170
	°C	99–121	93	93–154	NL	77
Zinc sulfate	°F	200–250	200–210	210–350	250	170
	°C	93–121	93–99	99–177	121	77

NL = Not Listed
NR = Not Recommended
NT = Not Tested

The piping manufacturer should be contacted for recommendations for specific abrasive applications. The following information will be needed to make the best recommendation:

- Particle size
- Percent solids
- Particle hardness
- Flow velocity
- Continuous or intermittent service

TABLE D2.6 Derakane Epoxy Vinyl Ester Resins Taber Abrasion Testing[1]

Laminate description	Wear index
Derakane 411	388
Derakane 470	520
Derakane 8084	250
Derakane 411, 10% fine silica	70
Derakane 411, 50% fine silica	38
Derakane 411, 66% fine silica	38
Derakane 411, 20% silicon carbide	25
Derakane 411, 40% silicon carbide	10
Derakane 411, 50% silicon carbide	10

[1] CS-17 Abrasive Wheel, 1000 gram loading

Source: Derakane epoxy vinyl ester resins "Fabricating Tips" 10/94

Flame Resistance

Flame-resistant fiberglass piping has been developed that is readily avaliable. These systems usually use phenolic resins or brominated vinyl ester resins with antimony trioxide fillers. ASTM E-84 tunnel test flame spread ratings below 25 can be achieved with both resin systems. Phenolic systems also provide for low smoke generation. Intunescent coatings can also be applied to increase flame resistance.

Weather Resistance

Fiberglass piping systems have been successfully used from the north slope of Alaska to the Sahara desert. Fiberglass piping is less prone to ultraviolet or cold embrittlement and cracking than thermoplastic piping systems. Fiberglass piping also has operating temperature capabilities in excess of ambient temperatures. Surfaces of fiberglass piping systems exposed to sunlight will experience ultraviolet degradation of the resin. This degradation is a surface effect which stops as soon as the glass fibers are exposed. Long-term testing of fiberglass piping typically shows no effect on the physical strength of the components. The surface appearance of the pipe will deteriorate with ultraviolet exposure. The surface can be protected with a resin-rich veil surface, paint, or ultraviolet inhibitors.

PHYSICAL PROPERTIES

The physical properties of fiberglass pipe are dependent on resin type, glass type, manufacturing method, glass orientation, and cure profile. Actual properties may vary significantly between pipes that appears to be similar; therefore the manufacturer's published data should be used for all engineering calculations. Table D2.7 is provided as preliminary information only. Since FRP physical properties are dependent on glass orientation, unit stress and elastic modulus are also dependent on orientation of the load. Fig. D2.4 shows simplified load orientations along with the ASTM standard test method used to measure unit stress and elastic modulus.

TABLE D2.7 Typical Ultimate Physical Properties for Fiberglass Pipe

Property at 75°F (24°C)	Filament-wound epoxy pipe	Centrifugally cast epoxy pipe	Filament-wound vinyl ester pipe	Centrifugally cast vinyl ester pipe	Filament-wound isophthalic pipe
Hydrostatic burst, ASTM D-1599					
ultimate stress, psi (kg/cm^2)*	38,000 (2,700)	27,000 (1,900)	40,000 (2,800)	34,500 (2,400)	42,000 (3,000)
modulus of elasticity, psi (kg/cm^2)*	3.4E+06 (2.4E+05)	2.6E+06 (1.8E+05)	3.2E+06 (2.2E+05)	2.3E+06 (1.6E+05)	3.2E+06 (2.2E+05)
Hydrostatic design stress, ASTM D-2992, psi (kg/cm^2)*	11,000 (770)	11,000 (770)	7,000 (490)	8,000 (560)	7,500 (530)
Axial tensile, ASTM D-2105					
ultimate stress, psi (kg/cm^2)*	15,000 (1,100)	35,000 (2,500)	9,000 (630)	36,000 (2,500)	9,400 (660)
modulus of elasticity, psi (kg/cm^2)*	1.8E+06 (1.3E+05)	2.8E+06 (2.0E+05)	1.5E+06 (1.1E+05)	2.6E+06 (1.8E+05)	1.9E+06 (1.3E+05)
Beam bending, ASTM D-2925					
ultimate stress, psi (kg/cm^2)*	25,000 (1,800)	41,000 (2,900)	20,000 (1,400)	38,000 (2,700)	
modulus of elasticity, psi (kg/cm^2)*	2.0E+06 (1.4E+05)	2.6E+06 (1.8E+05)	1.8E+06 (1.3E+05)	2.4E+06 (1.7E+05)	1.3E+06 (0.91E+05)
Axial compressive, ASTM D-695					
ultimate stress, psi (kg/cm^2)*	30,000 (2,100)	38,000 (2,700)	16,000 (1,100)	26,000 (1,800)	23,000 (1,600)
modulus of elasticity, psi (kg/cm^2)*	2.0E+06 (1.4E+05)	2.5E+06 (1.8E+05)	1.6E+06 (1.1E+05)	2.5E+06 (1.8E+05)	8.5E+05 (0.60E+05)
Hoop bending, ASTM D-2412 modulus of elasticity, psi (kg/cm^2)*	2.5E+06 (1.8E+05)	3.4E+06 (2.4E+05)	2.3E+06 (1.6E+05)	3.1E+06 (2.2E+05)	2.2E+06 (1.5E+05)
Coefficient of thermal expansion ASTM D-696, in/in/°F (mm/mm/°C)†	1.0E−05 (1.8E−05)	1.1E−05 (2.0E−05)	1.2E−05 (2.2E−05)	0.87E−05 (1.6E−05)	1.4E−05 (2.5E−05)
Coefficient of thermal conductivity ASTM D-177, BTU/(ft^2)(hr)(°F/in), (W/(m)(°K))†	2.4 (0.35)	0.87 (0.13)	1.7 (0.25)	0.87 (0.13)	1.7 (0.25)
Specific gravity, ASTM D-792†	1.8	1.45	1.8	1.55	2.1
Poisson's ratio, ASTM D-2105 Ratio axial strain-to-hoop strain*	0.26	0.15	0.3	0.15	
Flow factor					
Hazen-Williams 'C'	150	150	150	150	150
Manning's 'n'	0.009	0.009	0.009	0.009	0.009
Absolute roughness, ft	1.7E−05	1.7E−05	1.7E−05	1.7E−05	1.7E−05

* ***Note 1:*** Based on reinforced wall thickness
† ***Note 2:*** Based on total wall thickness

Stress – The amount of force on the laminate (psi) with respect to the dimensions of the laminate and direction of the force.

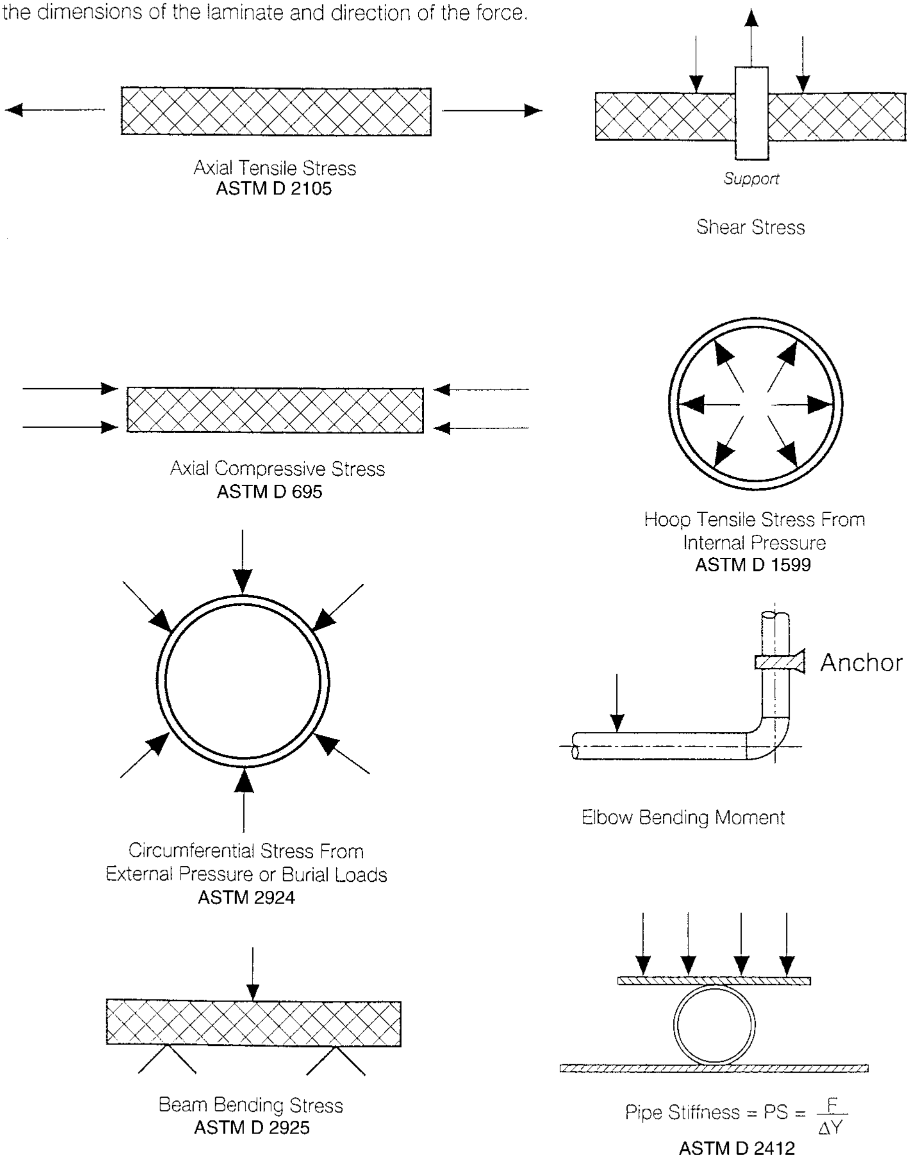
Axial Tensile Stress
ASTM D 2105
Support
Shear Stress
Axial Compressive Stress
ASTM D 695
Hoop Tensile Stress From Internal Pressure
ASTM D 1599
Circumferential Stress From External Pressure or Burial Loads
ASTM 2924
Anchor
Elbow Bending Moment
Beam Bending Stress
ASTM D 2925
Pipe Stiffness = PS = F/ΔY
ASTM D 2412

FIGURE D2.4 Simplified load orientation used for determing unit stress and elastic modulus according to ASTM test methods.

BENEFITS AND LIMITATIONS OF FIBERGLASS PIPING SYSTEMS

Fiberglass pipe offers a number of benefits compared to other piping materials, but it also has some significant limitations. The piping designer should review the benefits and limitations when making the piping material selection.

Corrosion Resistance

Fiberglass piping can be manufactured with resins selected to optimize corrosion resistance for a particular application. Corrosion resistance is generally good compared to competitive materials but may have some concentration and temperature limitations.

Installed Cost

The installed cost of FRP pipe is competitive with stainless steel, lined steel, and high-end thermoplastic systems (see Table D2.8 and Fig. D2.5).

TABLE D2.8 Total Material and Labor Cost Index* (Average for Pipe Installed in Process Areas, Inside Buildings, and Outside Buildings, Fiberglass = 1.0)

NPS (DN)	CPVC Schedule 80	PVDF Plastic 160 psi	Polypropylene-lined steel Class 150	A53 Carbon steel Sch. 40 STD.	Stainless steel Sch. 10	Fiberglass 150 psi
1″ (25)	0.10	0.53	0.48		0.31	1.00
1½″ (40)	0.18	1.23	0.82		0.45	1.00
2″ (50)	0.36	2.56	1.53	0.42	0.95	1.00
3″ (80)	0.44	2.47	1.63	0.46	0.93	1.00
4″ (100)	0.49	3.00	1.83	0.50	0.99	1.00
6″ (150)	0.59	4.13	2.09	0.53	1.36	1.00
8″ (200)		4.04	2.07	0.49	1.33	1.00
10″ (250)		4.56		0.50	1.35	1.00
12″ (300)		6.21		0.50	1.36	1.00
14″ (350)				0.51		1.00

Source: Richardson Engineering Services Process Plant Construction Estimating Standards, 1997 Edition

* ***Note:*** Does not include fittings, valves or support devices.

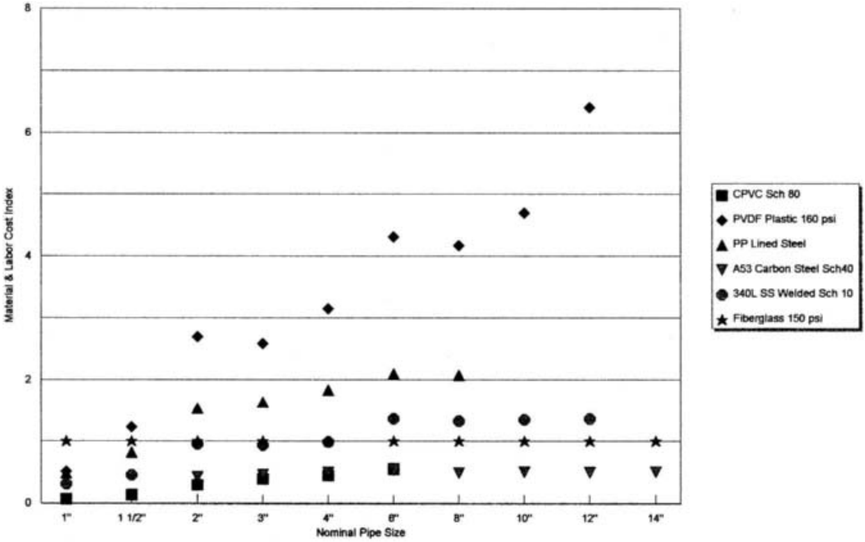

FIGURE D2.5 Piping material and labor (total cost index).

Unsupported Spans

The spans for fiberglass systems can actually be longer than both steel and thermoplastic systems (see Table D2.9 and Fig. D2.6), further reducing the installed cost on aboveground systems.

TABLE D2.9 Support Spacing In Feet at 60°F (Specific Gravity = 1.00)

NPS (DN)	PVC Schedule 80	Steel standard wall	Fiberglass process pipe
1″ (25)	6.0	7.0	12.3
1½″ (40)	6.5	9.0	14.4
2″ (50)	7.0	10.0	15.0
3″ (80)	8.0	12.0	17.4
4″ (100)	9.0	14.0	19.0
6″ (150)	10.0	17.0	21.8
8″ (200)	11.0	19.0	24.4
10″ (250)	12.0	22.0	26.7

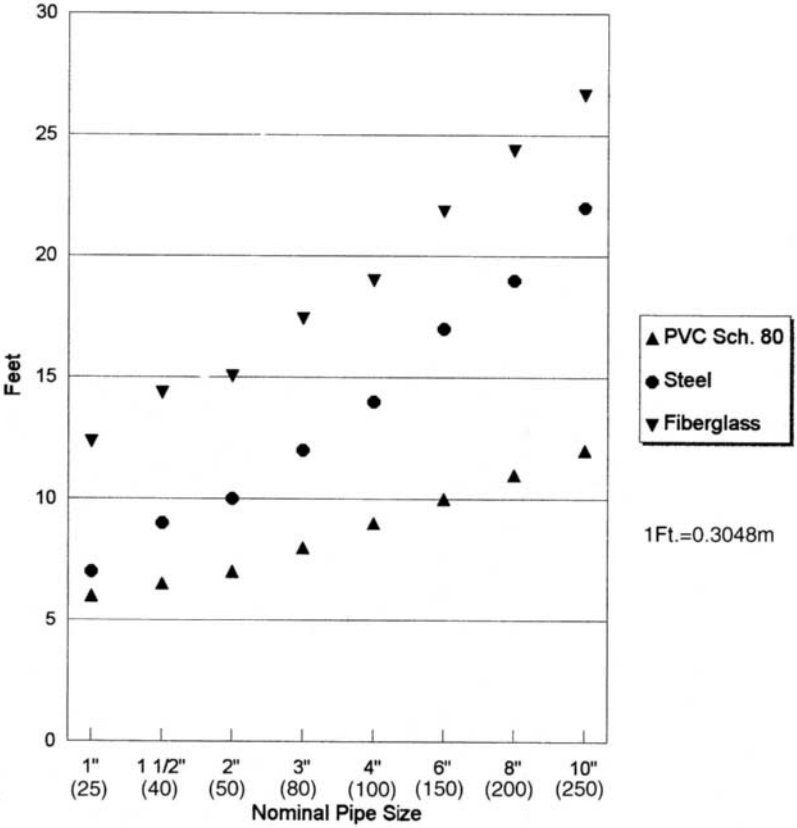

FIGURE D2.6 Support spacing (feet at 60°F).

Thermal Expansion

The thermal expansion of fiberglass pipe is comparatively low (see Table D2.10 and Fig. D2.7) and can be easily controlled using the inherent strength of fiberglass.

Flow Loss

Fiberglass pipe has a smooth bore which typically remains smooth throughout the life of the system. The smooth bore significantly reduces flow loss in both pumped and drainage systems. Flow loss can significantly affect the life cycle cost of pumped systems and pipe size requirements for drainage systems (see Table D2.11 and D2.12).

TABLE D2.10 Piping System Thermal Expansion, Uninsulated Pipe (inches/100 feet)

Temperature change degrees F	PVC	CPVC	Carbon steel	Stainless steel	Typical fiberglass pipe
25	0.90	1.14	0.18	0.27	0.31
50	1.80	2.28	0.36	0.54	0.61
75	2.70	3.42	0.54	0.82	0.92
100	3.60	4.56	0.72	1.09	1.23
125	4.50	5.70	0.90	1.36	1.53
150	5.40	6.84	1.08	1.63	1.84

Temperature Change, °F = $\frac{1}{1.8}$ °C

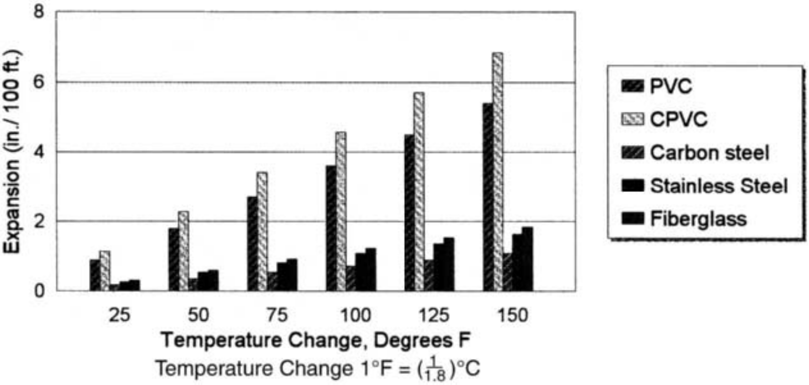

FIGURE D2.7 Pipe thermal expansion, Uninsulated Pipe (inches/100 feet).

TABLE D2.11 Cost Comparison (Steel versus Fiberglass)

Flow rate (gpm):	1200
Pipe length (ft):	3000
Pipe I.D. (in.) (steel):	7.98
Pipe I.D. (in.) (fiberglass):	8.35
Fluid density (lbs/gal):	8.34
Energy cost per kW-hr:	$0.05

Pump efficiency:	80.0%
Pump price* (for steel line):	$7,850.00
Pump price† (for fiberglass line):	$3,920.00
Material & labor per foot (steel):	$13.79
Material & labor per foot (fiberglass):	$24.21
Discount rate:	8.5%

	Hazen-Williams flow coefficient		Total head loss (ft)		Horsepower demand (hp)		Energy consumption (kW-hr)		Total energy cost		Life cycle cost	
	Steel	Fiberglass	Steel	Fiberglass	Steel	Fiberglass	Steel	Fiberglass	Steel	Fiberglass	Steel	Fiberglass
Year: 0											$49,229.00	$76,535.00
1	126.0	150	82.4	47.9	25.0	14.5	204081.3	118493.45	$10,204.06	$5,924.67	$58,633.67	$81,995.53
2	120.5	150	89.6	47.9	27.2	14.5	221800.7	118493.45	$11,090.04	$5,924.67	$68,054.16	$87,028.27
3	109.6	150	106.6	47.9	32.3	14.5	264058.9	118493.45	$13,202.94	$5,924.67	$78,390.85	$91,666.75
4	102.8	150	120.2	47.9	36.4	14.5	297557.0	118493.45	$14,877.85	$5,924.67	$89,126.32	$95,941.84
5	98.2	150	130.8	47.9	39.7	14.5	323850.4	118493.45	$16,192.52	$5,924.67	$99,895.08	$99,882.01
6	94.9	150	139.3	47.9	42.2	14.5	344983.7	118493.45	$17,249.18	$5,924.67	$110,467.88	$103,513.51
7	92.4	150	146.3	47.9	44.4	14.5	362384.8	118493.45	$18,119.24	$5,924.67	$120,703.92	$106,860.52
8	90.5	150	152.2	47.9	46.2	14.5	377012.3	118493.45	$18,850.62	$5,924.67	$130,518.86	$109,945.31

TABLE D2.11 Cost Comparison (Steel versus Fiberglass) (*Continued*)

	Hazen-Williams flow coefficient		Total head loss (ft)		Horsepower demand (hp)		Energy consumption (kW-hr)		Total energy cost		Life cycle cost	
	Steel	Fiberglass	Steel	Fiberglass	Steel	Fiberglass	Steel	Fiberglass	Steel	Fiberglass	Steel	Fiberglass
Year: 9	88.9	150	157.3	47.9	47.7	14.5	389522.0	118493.45	$19,476.10	$5,924.67	$139,865.04	$112,788.44
10	87.6	150	161.7	47.9	49.0	14.5	400374.9	118493.45	$20,018.75	$5,924.67	$148,719.04	$115,408.84
11	86.5	150	165.5	47.9	50.2	14.5	409904.6	118493.45	$20,495.23	$5,924.67	$157,073.64	$117,823.95
12	85.5	150	168.9	47.9	51.2	14.5	418358.2	118493.45	$20,917.91	$5,924.67	$164,932.54	$120,049.86
13	84.7	150	172.0	47.9	52.2	14.5	425923.3	118493.45	$21,296.17	$5,924.67	$172,306.74	$122,101.39
14	84.0	150	174.8	47.9	53.0	14.5	432744.7	118493.45	$21,637.24	$5,924.67	$179,212.08	$123,992.20
15	83.3	150	177.3	47.9	53.8	14.5	438936.4	118493.45	$21,946.82	$5,924.67	$185,667.52	$125,734.88
16	82.8	150	179.5	47.9	54.4	14.5	444589.4	118493.45	$22,229.47	$5,924.67	$191,693.85	$127,341.04
17	82.2	150	181.6	47.9	55.1	14.5	449777.2	118493.45	$22,488.86	$5,924.67	$197,312.89	$128,821.37
18	81.8	150	183.6	47.9	55.7	14.5	454560.1	118493.45	$22,728.01	$5,924.67	$202,546.80	$130,185.73
19	81.3	150	185.3	47.9	56.2	14.5	458988.1	118493.45	$22,949.40	$5,924.67	$207,417.67	$131,443.21
20	80.9	150	187.0	47.9	56.7	14.5	463102.8	118493.45	$23,155.14	$5,924.67	$211,947.19	$132,602.17

* 75 HP close-coupled centrifugal pump, bronze fitted construction

† 40 HP close-coupled centrifugal pump, bronze fitted construction

Click for view of double page spread

TABLE D2.12 Fiberglass versus Coated Cast-Iron (Drainage Pipe Flow Comparison Using the Manning Equation)

Pipe input variables					Manning equation variables		
I.D. of pipe (inches)	Pipe material	Manning roughness	% Pipe used (select ¼, ½, ¾, or F)		Cross-sect. area (ft.)	Wetted perimeter (ft.)	Hydraulic radius
8.000	Steel	0.013	(¾ Full)	75	0.174533	1.047198	0.166667
8.085	Fiberglass	0.009	(¾ Full)	75	0.178261	1.058324	0.168438
3	Steel	0.013	(½ Full)	50	0.024544	0.392699	0.062500
3	Fiberglass	0.009	(½ Full)	50	0.024544	0.392699	0.062500
4	Steel	0.013	(½ Full)	50	0.043633	0.523599	0.083333
4	Fiberglass	0.009	(½ Full)	50	0.043633	0.523599	0.083333
6	Steel	0.013	(½ Full)	50	0.098175	0.785398	0.125000
6	Fiberglass	0.009	(½ Full)	50	0.098175	0.785398	0.125000
8	Steel	0.013	(½ Full)	50	0.174533	1.047198	0.166667
8	Fiberglass	0.009	(½ Full)	50	0.174533	1.047198	0.166667
10	Steel	0.013	(½ Full)	50	0.272708	1.308997	0.208333
10	Fiberglass	0.009	(½ Full)	50	0.272708	1.308997	0.208333
12	Steel	0.013	(½ Full)	50	0.392699	1.570796	0.250000
12	Fiberglass	0.009	(½ Full)	50	0.392699	1.570796	0.250000
14	Steel	0.013	(½ Full)	50	0.534507	1.832596	0.291667
14	Fiberglass	0.009	(½ Full)	50	0.534507	1.832596	0.291667

1. Use appropriate conversion factors for metric units.

1⁄16 in./ft. gradient slope = 0.00521		1⁄8 in./ft. gradient slope = 0.01042		1⁄4 in./ft. gradient slope = 0.02083		1⁄2 in./ft. gradient slope = 0.04167	
Discharge (gpm)	Velocity (fps)	Discharge (gpm)	Velocity (fps)	Discharge (gpm)	Velocity (fps)	Discharge (gpm)	Velocity (fps)
355.96	4.54	503.41	6.43	711.86	9.09	1006.84	12.85
528.86	6.61	747.94	9.35	1057.64	13.22	1495.91	18.70
14.30	1.30	20.22	1.84	28.59	2.60	40.44	3.67
20.65	1.87	29.21	2.65	41.30	3.75	58.42	5.30
30.79	1.57	43.55	2.22	61.59	3.14	87.11	4.45
44.48	2.27	62.91	3.21	88.96	4.54	125.8	6.43
90.8	2.06	128.4	2.91	181.6	4.12	256.8	5.83
131.2	2.98	185.5	4.21	262.3	5.95	371.0	8.42
195.6	2.50	276.6	3.53	391.1	4.99	553.2	7.06
282.5	3.61	399.5	5.10	565.0	7.21	799.1	10.20
354.6	2.90	501.5	4.10	709.2	5.79	1003.1	8.20
512.3	4.19	724.5	5.92	1024.4	8.37	1448.9	11.84
576.7	3.27	815.6	4.63	1153.3	6.54	1631.3	9.26
833.0	4.73	1178.1	6.68	1665.9	9.45	2356.3	13.37
870.0	3.63	1230.4	5.13	1739.8	7.25	2460.8	10.26
1256.6	5.24	1777.2	7.41	2513.08	10.48	3554.5	14.82

PRESSURE RATINGS

Fiberglass piping is available with a wide range of both internal and external pressure ratings depending on its intended application (see Tables D2.13 through D2.16). Pipe larger than NPS 16 (DN 400) is usually custom-made for the system pressure requirements. The piping system internal pressure rating is usually limited by the joining method and fittings, not the pipe. Long-term pressure ratings are extrapolated to a 50-year life expectancy using regression analysis (see Table D2.17).

TABLE D2.13 Fiberglass Process Piping (Internal & External Pressure Ratings for Pipe Manufactured According to ASTM D 2996 or ASTM D 2997)

NPS (DH)	Units	Internal pressure rating ranges*				External pressure rating ranges*	
		Vinyl ester		Epoxy		Vinyl ester	Epoxy
		Pipe	Fittings & joints	Pipe	Fittings & joints	Pipe	Pipe
1″ (25)	psi MPa	735–950 5.07–6.55	50–950 0.34–6.55	450–950 3.1–6.55	150–950 1.03–6.55	1975–6400 13.6–44.1	360–2125 2.48–14.7
2″ (50)	psi MPa	200–850 1.38–5.86	50–850 0.34–5.86	450–1250 3.1–8.62	150–1250 1.03–8.62	330–2700 2.28–18.6	55–1170 0.38–8.07
3″ (80)	psi MPa	150–660 1.03–4.55	50–660 0.34–4.55	300–830 2.07–5.72	150–830 1.03–5.72	97–800 0.67–5.52	25–335 0.17–2.31
4″ (100)	psi MPa	125–510 0.86–3.52	50–510 0.34–3.52	175–785 1.21–5.41	150–785 1.03–5.41	45–340 0.31–2.34	16–225 0.11–1.55
6″ (150)	psi MPa	125–420 0.86–2.9	50–420 0.34–2.9	125–525 0.86–3.62	100–525 0.69–3.62	37–100 0.26–0.69	10–62 0.07–0.43
8″ (200)	psi MPa	100–360 0.69–2.48	50–360 0.34–2.48	125–450 0.86–3.1	75–450 0.52–3.1	21–56 0.14–0.39	10–45 0.07–0.31
10″ (250)	psi MPa	100–335 0.69–2.31	50–335 0.34–2.31	125–415 0.86–2.86	50–415 0.34–2.86	13–33 0.09–0.23	10–35 0.07–0.24
12″ (300)	psi MPa	100–280 0.69–1.93	45–280 0.31–1.93	125–350 0.86–2.41	50–350 0.34–2.41	10–23 0.07–0.16	7–23 0.05–0.16

* ***Note:*** Ratings at ambient temperatures

TABLE D2.14 Fiberglass Line Pipe (Internal and External Pressure Ratings for Pipe Manufactured according to API 15LR or API 15 HR)

Nominal Size	Units	Internal pressure rating ranges	External pressure rating ranges
2″	psi MPa	300–4000 2.07–27.6	130–5700 0.9–39.3
3″	psi MPa	300–4000 2.07–27.6	60–5900 0.41–40.7
4″	psi MPa	300–4000 2.07–27.6	40–5600 0.28–38.6
6″	psi MPa	400–2500 2.76–17.2	225–2690 1.55–18.5

TABLE D2.15 Fiberglass Downhole Tubing (Internal and External Pressure Ratings)

Nominal Size	Units	Internal pressure rating ranges	External pressure rating ranges
1″	psi MPa	2000–3000 13.8–20.7	2000–4000 13.8–27.58
1½″	psi MPa	1000–4000 6.89–27.6	800–6000 5.52–41.37
2⅜″	psi MPa	1000–4000 6.89–27.6	800–6890 5.52–47.5
2⅞″	psi MPa	1000–4000 6.89–27.6	800–6680 5.52–46.06
3½″	psi MPa	1000–4000 6.89–27.6	700–6490 4.83–44.75
4½″	psi MPa	1000–4000 6.89–27.6	400–6700 2.76–46.19
7″	psi MPa	1000–3000 6.89–20.7	600–4500 4.14–31.03

TABLE D2.16 Fiberglass Casing (Internal and External Pressure Ratings)

Nominal size	Units	Internal pressure rating ranges	External pressure rating ranges
5½″	psi MPa	800–2000 5.52–13.8	80–3000 0.55–20.7
7⅝″	psi MPa	800–2000 5.52–13.8	80–3000 0.55–20.7
9⅝″	psi MPa	800–2000 5.52–13.8	70–3200 0.48–22.1

TABLE D2.17 Long-Term Hydrostatic Design Basis Ranges for Fiberglass Pipe per ASTM D 2992

Type	Units	Range
Vinyl ester process pipe	psi MPa	5000–9280 34.5–63.98
Epoxy process pipe	psi MPa	5000–31500 34.5–217.2
Line pipe	psi MPa	5560–15000 38.3–103.4
Casing	psi MPa	5000–15000 34.5–103.4

ABOVEGROUND DESIGN

Anchors Guides and Supports

It is important that an aboveground fiberglass piping system be properly anchored, guided, and supported. Anchors, guides, and supports must be selected which protect the piping components from point loads. Point loading can cause significant damage which will affect the life of the system. Figures D2.8 through D2.11 show typical hanger, support, guide, and anchor details.

Design Equations and Criteria

Design equations and criteria have been developed for fiberglass piping used in aboveground systems. These equations and criteria are conservative and have resulted in many numerous successful piping installations. Most of the fiberglass piping manufacturers publish technical information based on these equations and criteria.

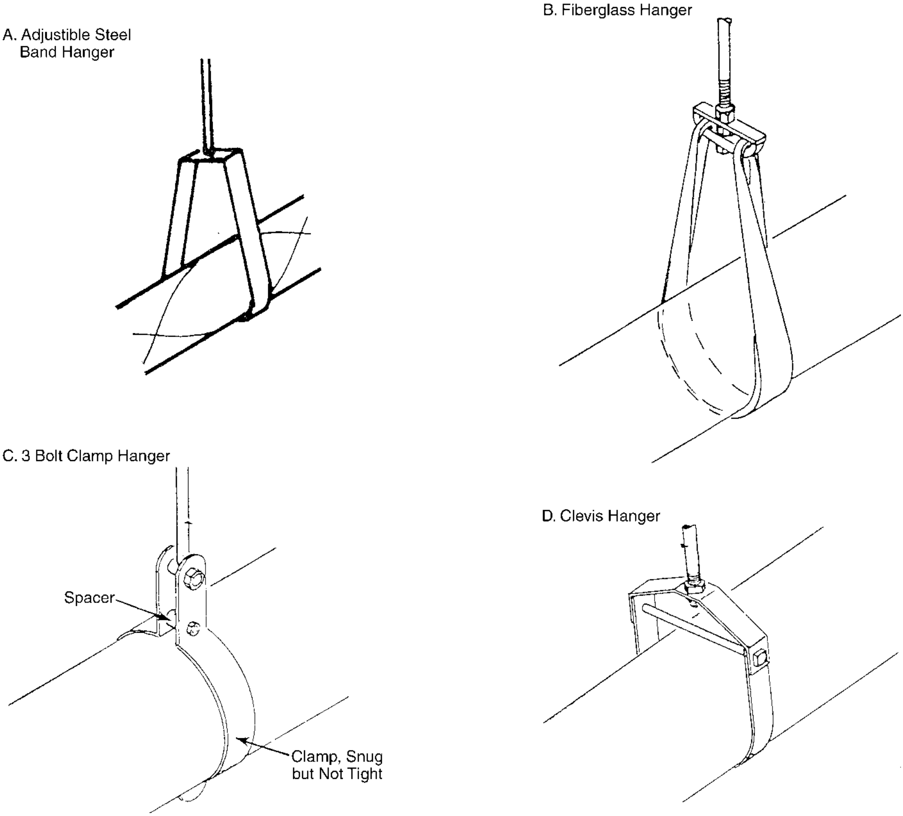
A. Adjustible Steel Band Hanger
B. Fiberglass Hanger
C. 3 Bolt Clamp Hanger
Spacer
Clamp, Snug but Not Tight
D. Clevis Hanger

FIGURE D2.8 Typical hanger details. Pipe can move laterally and axially. (*Illustrations courtesy of Smith Fiberglass Products, Inc., Ameron Fiberglass Pipe Systems, and Fibercast Co.*)

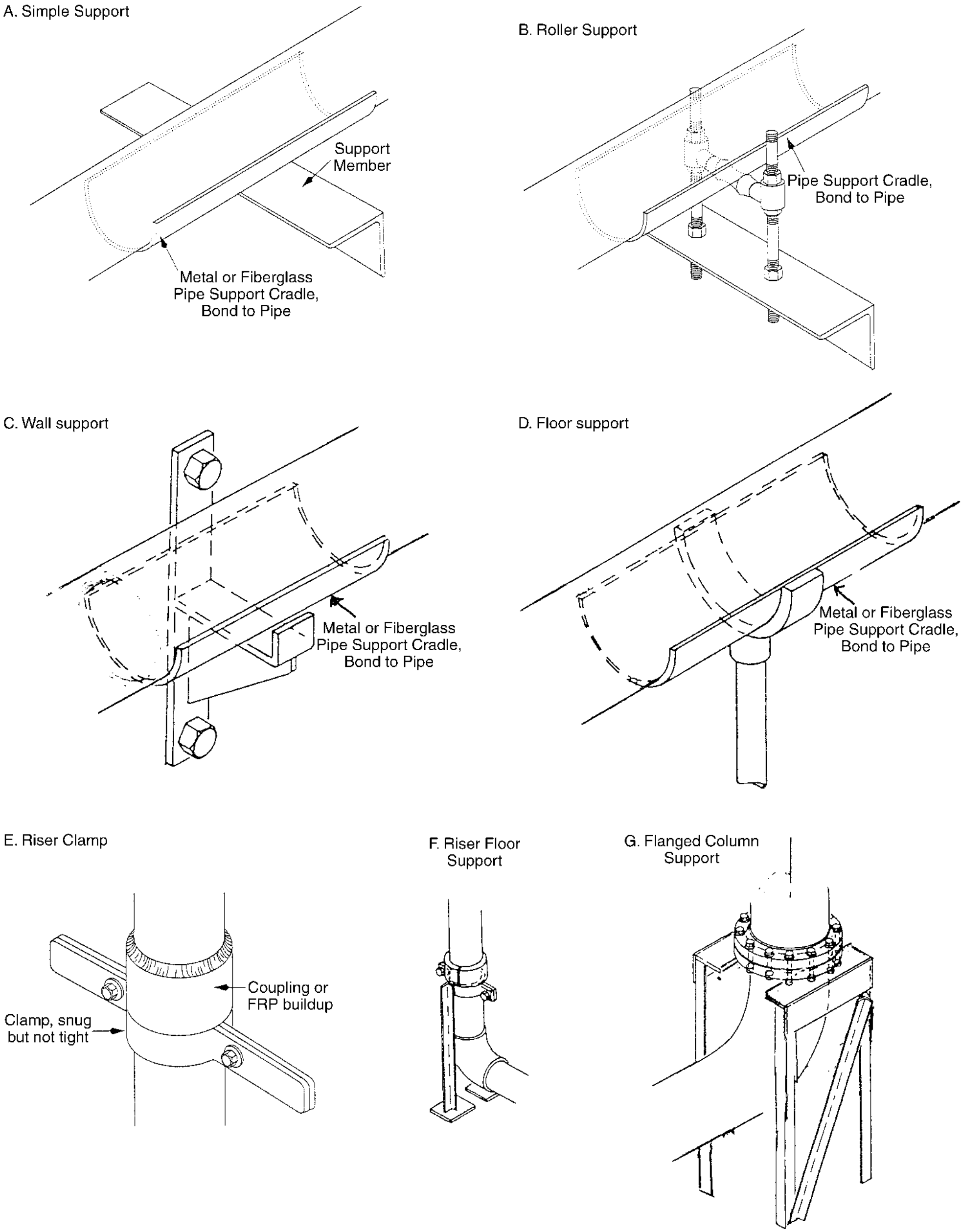
A. Simple Support
Support Member
Metal or Fiberglass Pipe Support Cradle, Bond to Pipe
B. Roller Support
Pipe Support Cradle, Bond to Pipe
C. Wall support
Metal or Fiberglass Pipe Support Cradle, Bond to Pipe
D. Floor support
Metal or Fiberglass Pipe Support Cradle, Bond to Pipe
E. Riser Clamp
Coupling or FRP buildup
Clamp, snug but not tight
F. Riser Floor Support
G. Flanged Column Support

FIGURE D2.9 Typical support details. Pipe can move laterally and axially. (*Illustrations courtesy of Smith Fiberglass Products, Inc., Ameron Fiberglass Pipe Systems, and Fibercast Co.*)

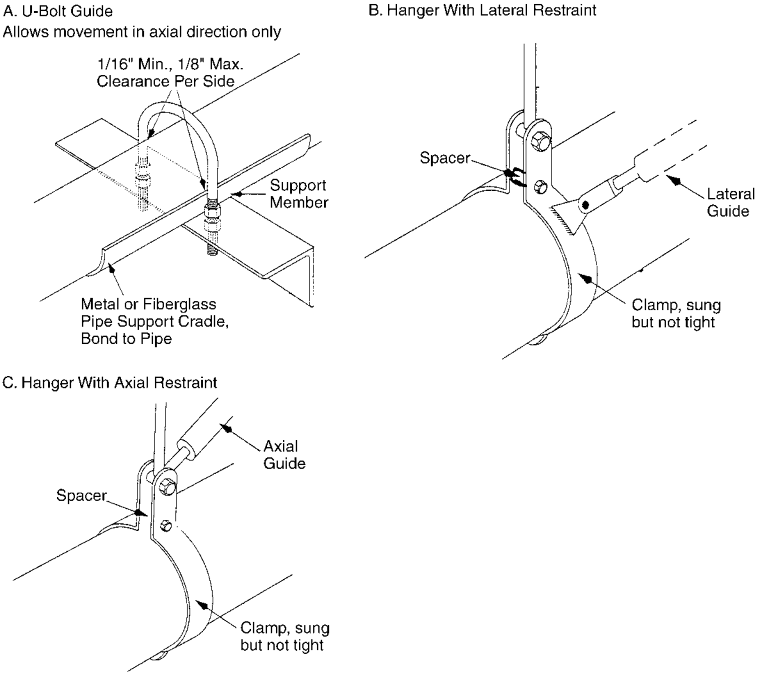
A. U-Bolt Guide
Allows movement in axial direction only
1/16" Min., 1/8" Max.
Clearance Per Side
Support
Member
Metal or Fiberglass
Pipe Support Cradle,
Bond to Pipe
B. Hanger With Lateral Restraint
Spacer
Lateral
Guide
Clamp, sung
but not tight
C. Hanger With Axial Restraint
Axial
Guide
Spacer
Clamp, sung
but not tight

FIGURE D2.10 Typical guide details. Pipe is restrained axially or laterally. (*Courtesy of Fibercast Co.*)

Finite element computer design programs based on ASME design criteria are also used to design fiberglass piping systems. Use of one of these computer programs should be considered when designing complex systems. The manufacturer's published data should be used whenever doing design calculations or computer design.

Minimum Fiberglass Pipe Support Width. Fiberglass pipe can be damaged by point loads at hangers, supports, anchors, or guides. Hangers, supports, anchors, or guides should be selected which provide a minimum of 120° contact and a maximum bearing stress of 85 psi (6.0 kg/cm^2). Fiberglass pipe should be protected when used with support rollers, U-bolts, or flat supports such as angle iron or I-Beams (see Figs. D2.8 through D2.11). Eq. (D2.1) or Table D2.18 can be used to determine minimum fiberglass pipe support widths.

$$W = \frac{\sqrt{3}/2 * F}{\mathrm{OD} * Sb} \tag{D2.1}$$

where W = minimum support width, in (cm)
F = weight on support, lbs (kg)
OD = pipe outer diameter, in (cm)
Sb = allowable bearing stress 85 psi (5.98 kg/cm^2)
Based on 120° of contact.

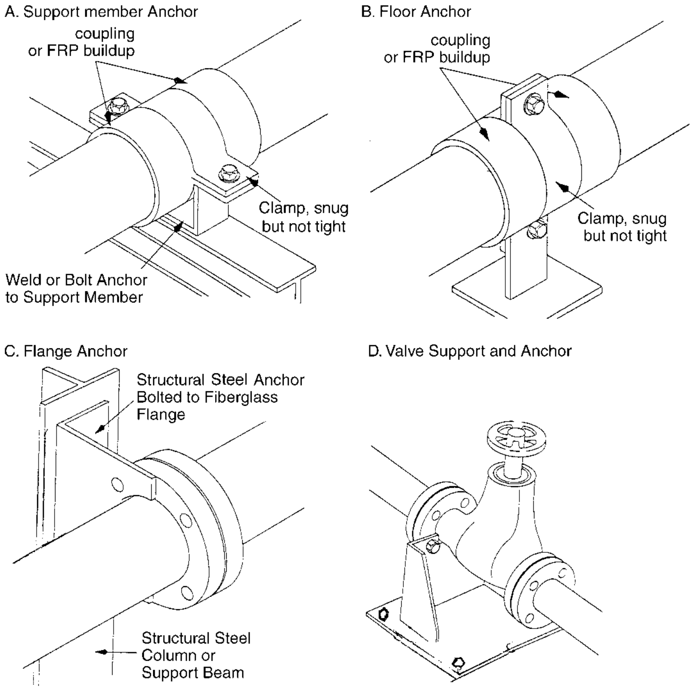
A. Support member Anchor
coupling or FRP buildup
Clamp, snug but not tight
Weld or Bolt Anchor to Support Member
B. Floor Anchor
coupling or FRP buildup
Clamp, snug but not tight
C. Flange Anchor
Structural Steel Anchor Bolted to Fiberglass Flange
Structural Steel Column or Support Beam
D. Valve Support and Anchor

FIGURE D2.11 Typical anchor details. Pipe is restrained in all directions. (*Courtesy of Fibercast Co.*)

TABLE D2.18 Minimum Support Width for 120° Contact

Pipe size		Minimum support width	
NPS	DN	in.	mm
1	25	⅞	22.4
1½	40	⅞	22.4
2	50	⅞	22.4
3	80	1¼	31.8
4	100	1¼	31.8
6	150	1½	38.1
8	200	1¾	44.5
10	250	1¾	44.5
12	300	2	50.8
14	350	2	50.8

Note: Table is based on fluid specific gravity of 1.25 and typical maximum spans for filament wound fiberglass pipe at 75°F (24°C).

Example D2.1: 36 in nominal diameter pipe carrying 1.25 specific gravity fluid

F = weight of pipe plus weight of fluid times span length (32.5 lbs/ft + 550 lbs/ft) * 25 ft = 14,560 lbs
OD = 36.75"

$$W = \frac{\sqrt{3}/2 * 14560}{36.75 * 85} \Rightarrow 4.04''$$

TABLE D2.19 Deflection Coefficients, f, for Various Span Configurations

1 Span	2 Span	3 Span	4 Span
N—N f = 0.013	N—N—N f = 0.0069	N—N—N—N 1 2 1 f1 = 0.0069 f2 = 0.0026	N—N—N—N—N 1 2 2 1 f1 = 0.0065 f2 = 0.0031
F—N f = 0.0054	F—N—N 1 2 f1 = 0.0026 f2 = 0.0054	F—N—N—N 1 2 2 f1 = 0.0026 f2 = 0.0054	F—N—N—N—N 1 2 2 2 f1 = 0.0026 f2 = 0.0054
N—F f = 0.06	F—N—F f = 0.0026	F—N—N—F 1 2 1 f1 = 0.0026 f2 = 0.0031	F—N—N—N—F 1 2 2 1 f1 = 0.0026 f2 = 0.0031
	F—F—F f = 0.0026	F—F—F—F f = 0.0026	F—F—F—F—F f = 0.0026

Where: F = fixed securely, N = not fixed

Support Spacing for Fiberglass Pipe. Fiberglass pipe support spacing is determined using beam deflection equations. Deflection is normally limited to ½ in (1.27 cm). The resulting pipe bending stress is normally well below the allowable bending stress. Maximum pipe span based on deflection can be calculated using the following equation along with Table D2.20.

$$L = \left(\frac{d * Eb * I}{f * W}\right)^{0.25} \tag{D2.2}$$

where L = unsupported span length, in (cm)
d = allowable midpoint deflection, in (cm)
Eb = bending modulus of elasticity, psi (kg/cm^2)
l = pipe moment of inertia, in^4 (cm^4)
f = deflection coefficient. Table D2.19
W = weight of pipe and fluid, lbs/in (kg/cm)

Example D2.2: HPS 14 (DN 350) Pipe with Supports Securely Fixed,

$d = 0.5$ in
$Eb = 2 \times 10^6$ psi
$I = 226.12$ in^4
$f = 0.026$
$W = 7.08$ lbs/in

$$L = \left(\frac{0.5 * 2 \times 10^6 * 226}{0.0026 * 7.08}\right)^{0.25} \Rightarrow 333''$$

TABLE D2.20 Typical Fiberglass Pipe Maximum Support Spacing

Nominal pipe size, NPS (DN)	1 (25)	1½ (40)	2 (50)	3 (80)	4 (100)	6 (150)	8 (200)	10 (250)	12 (300)	14 (350)
Support spacing, ft (m)	12½ (3.8)	14½ (4.4)	15 (4.6)	17½ (5.3)	19 (5.8)	21½ (6.6)	24½ (7.5)	26½ (8.1)	28 (8.5)	29 (8.8)

Note: Based on 4 span fixed continuous beam with a fluid specific gravity of 1. Use the following multipliers for other conditions.

Specific gravity	Span multiplier	Beam type	Span multiplier
1.25	0.95	Simple support, 1 Span	0.669
1.50	0.90	Continuous beam, 3 Span	0.783
2.00	0.84	Continuous beam, 4 Span	0.795

Thermal Expansion Calculation. Fiberglass pipe expands at from 1¼ times to twice the rate of steel pipe due to changes in temperature. The wide variation in thermal expansion is due to the different constructions used to make different types of fiberglass pipe. The following equation is used to calculate thermal expansion. Refer to Table D2.21.

TABLE D2.21 Typical Fiberglass Pipe Thermal Expansion, $C_t = 10.2 \times 10^{-6}$ in/in/°F (18.3×10^{-6} in/cm/cm/°C)

Temperature change, °F	25	50	75	100	125	150	175	200	225
Length change, in./100 ft.	0.31	0.61	0.92	1.22	1.53	1.84	2.14	2.45	2.75
Temperature change, °C	14	28	42	56	69	83	97	111	125
Length change, cm/30.5 m.	0.79	1.55	2.34	3.10	3.89	4.67	5.44	6.22	6.99

$$L_C = C_t * L * T_C \tag{D2.3}$$

where L_c = length change, in (cm)
C_t = coefficient of thermal expansion, in/in/°F (cm/cm/°C)
L = Length of pipe between anchors, in (cm)
T_c = temperature change, °F (°C)

Example D2.3: NPS 14 (DN 350) Pipe

$Ct = 10.2 \times 10^{-6}$ in/in/°F
$L = 2400$ inches
$T_c = 100$ °F

$$L_C = 10.2 \times 10^{-6} * 2400 * 100 \Rightarrow 2.44 \text{ inches}$$

Restrained End Loads. Fiberglass pipes' low linear coefficient of thermal expansion, low compressive modulus of elasticity, and high compressive strength makes it practical to restrain the pipe to control thermal expansion. The following equation is used to determine the restrained end load for fiberglass pipe. Refer to Table D2.22 for typical heavy wall fiberglass pipe restrained end loads at rated compressive loads at 100°F (56°C) change in temperature.

$$E_L = C_t * E * A * T_c \tag{D2.4}$$

where E_L = thermal end load, lbs (kg)
C_t = coefficient of thermal expansion, in/in/°F (cm/cm/°C)
E = axial compressive modulus for expansion, psi (kg/cm^2) axial tensile modulus for contraction
A = reinforced cross-sectional area, in^2 (cm^2)
T_c = temperature change, °F (°C)

Example D2.4: NPS 14 (DN 350) Pipe

$Ct = 10.2 \times 10^{-6}$ in/in/°F
$E = 2.01 \times 10^6$ psi
$A = 9.4$ in^2
$T_c = 100$ °F

$$E_L = 10.2 \times 10^{-6} * 2.0 \times 10^6 * 9.4 * 100 \Rightarrow 19{,}200 \text{ lbs}$$

TABLE D2.22 Typical Heavy Wall Fiberglass Pipe Restrained End Loads and Rated Compressive Loads at 100°F (55.6°C) Temperature Change

Nominal pipe size, NPS (DN)	1 (25)	1½ (40)	2 (50)	3 (80)	4 (100)	6 (150)	8 (200)	10 (250)	12 (300)	14 (350)
Restrained load, lbs × 10^3 (kg × 10^3)	0.83 (.37)	1.40 (.64)	1.60 (.73)	2.86 (1.3)	3.91 (1.8)	6.53 (3.0)	9.88 (4.5)	13.5 (6.1)	16.7 (7.6)	19.2 (8.7)
Rated compressive load, lbs × 10^3 (kg × 10^3)	2.99 (1.4)	5.23 (2.4)	5.36 (2.4)	9.94 (4.5)	14.4 (6.5)	22.1 (10)	34.8 (15)	44.8 (22)	57.7 (26)	69.8 (32)

Guide Spacing. When a fiberglass piping system is restrained to control thermal expansion, guides must be used to prevent pipe buckling. The following equation should be used to determine maximum guide spacing:

$$Lg = 0.262 * \left(\frac{Eb * I}{C_t * E * A * T_c}\right)^{0.5} \tag{D2.5}$$

where L_g = maximum distance between guides, ft (m)
E_b = bending modulus of elasticity, psi (kg/cm^2)

l = pipe moment of inertia, in^4 (cm^4)
C_t = coefficient of thermal expansion, in/in/°F (cm/cm/°C)
E = axial compressive modulus for expansion, psi (kg/cm^2)
A = cross-sectional area, in^2 (cm^2)
T_c = temperature change, °F (°C)

Example D2.5: 14" Pipe

$Eb = 2 \times 10^6$ psi
$L = 226.12$ in^4
$Ct = 8.9 \times 10^{-6}$
$E = 2.1 \times 10^6$
$A = 12.912$
$T_c = 100$ °F

$$Lg = 0.262 * \left(\frac{2 \times 10^6 * 226}{8.9 \times 10^{-6} * 2.1 \times 10^6 * 12.912 * 100} \right)^{0.5} \Rightarrow 36 \text{ feet.}$$

Table D2.23 provides typical guide spacing for pipe sizes NPS l through 14 (DN 25 through 350).

TABLE D2.23 Typical Guide Spacing for Restrained Epoxy Pipe, Feet (meter)

Nominal pipe size, in (mm)	1 (25)	1½ (40)	2 (50)	3 (80)	4 (100)	6 (150)	8 (200)	10 (250)	12 (300)	14 (350)
Temperature change										
50°F (28°C)	5.0 (1.5)	7.7 (2.3)	8.6 (2.6)	13 (3.9)	17 (5.3)	25 (7.7)	32 (9.9)	40 (12)	46 (14)	59 (18)
100°F (56°C)	3.5 (1.1)	5.4 (1.7)	6.1 (1.9)	9.2 (2.8)	12 (3.6)	18 (5.4)	23 (7.1)	29 (8.7)	34 (10)	42 (13)
150°F (84°C)	2.9 (0.9)	4.4 (1.3)	5.0 (1.5)	7.4 (2.3)	10 (3.0)	14 (4.4)	19 (5.8)	24 (7.2)	28 (8.5)	34 (10)
200°F (111°C)	2.4 (0.7)	3.8 (1.2)	4.3 (1.3)	6.5 (2.0)	8.5 (2.6)	12 (3.8)	17 (5.1)	21 (6.3)	24 (7.4)	30 (9.0)

Changes of Direction and Expansion Loops. Thermal expansion in fiberglass piping systems is often controlled using changes of directional or expansion loops. The low thermal expansion, low beam-bending modulus of elasticity, and high beam-bending strength of fiberglass pipe makes changes of direction and expansion loops very practical methods of thermal expansion control. The following cantilevered beam equations are used to determine the minimum leg lengths needed, based on allowable pipe stress or elbow bending moments. Minimum leg lengths based on pipe stress and elbow bending moments should be determined, and the longer of the leg lengths used.

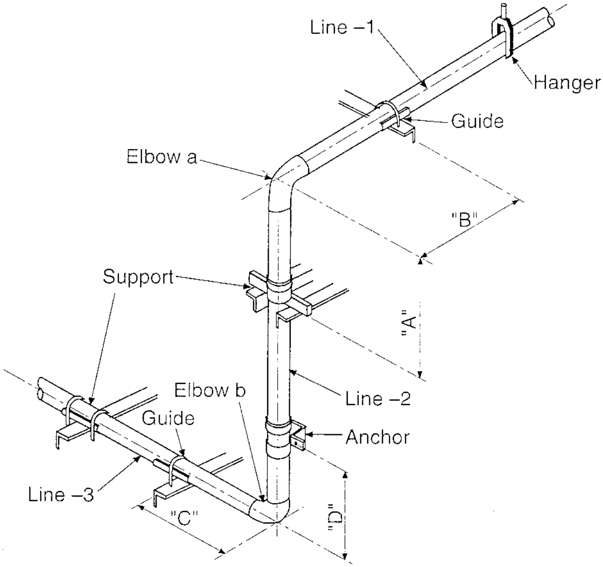
Line –1
Hanger
Guide
Elbow a
"B"
Support
"A"
Elbow b
Line –2
Guide
Anchor
Line –3
"C"
"D"

FIGURE D2.12 Offset leg sizing diagram.

Leg length based on pipe allowable bending stress (see Figs. D2.12 and D2.13):

$$A = \sqrt{\frac{K * L * E * \mathrm{OD}}{S}} \tag{D2.6}$$

where A = deflected pipe length, in (cm)

K = cantilevered beam constant

= 0.75 for expansion loops

= 1.50 for directional changes

L = length change, in (cm)

E = pipe-bending modulus of elasticity, psi (kg/cm^2)

OD = pipe outer diameter, in (cm)

S = pipe allowable bending stress (minimum 8:1 safety factor), psi (kg/cm^2)

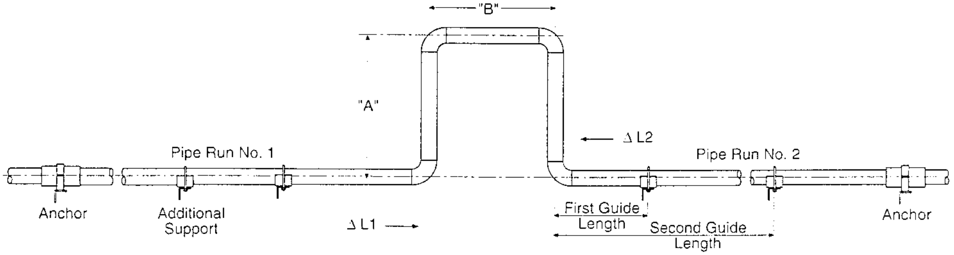
"B"
"A"
Δ L2
Pipe Run No. 1
Pipe Run No. 2
Anchor
Additional Support
Δ L1
First Guide Length
Second Guide Length
Anchor

FIGURE D2.13 Loop leg sizing diagram.

TABLE D2.24 Typical Expansion, in (mm) versus Leg Length, ft (m)

Nominal pipe size, NPS (DN)	1″ (25)	2″ (51)	3″ (76)	4″ (102)	5″ (127)	6″ (152)	7″ (178)	8″ (203)	9″ (229)	10″ (254)
1 (25)	4.6′ (1.4)	6.0′ (1.8)	7.1′ (2.2)	8.3′ (2.5)	9.1′ (2.8)	10′ (3.1)	11′ (3.3)	11′ (3.5)	12′ (3.8)	13′ (3.9)
1½ (40)	5.6′ (1.7)	7.7′ (2.3)	9.6′ (2.9)	11′ (3.3)	12′ (3.7)	13′ (4.0)	14′ (4.3)	15′ (4.6)	16′ (4.9)	17′ (5.1)
2 (50)	6.0′ (1.8)	8.3′ (2.5)	10′ (3.0)	12′ (3.5)	13′ (4.0)	14′ (4.4)	16′ (4.7)	17′ (5.0)	17′ (5.3)	18′ (5.6)
3 (80)	7.8′ (2.4)	11′ (3.4)	14′ (4.1)	15′ (4.7)	17′ (5.2)	19′ (5.8)	20′ (6.1)	22′ (6.6)	23′ (6.9)	24′ (7.3)
4 (100)	10′ (3.0)	14′ (4.2)	17′ (5.1)	20′ (5.9)	22′ (6.7)	24′ (7.3)	26′ (7.8)	27′ (8.3)	29′ (8.9)	31′ (9.4)
6 (150)	12′ (3.6)	17′ (5.2)	21′ (6.3)	24′ (7.2)	26′ (8.0)	29′ (8.8)	31′ (9.5)	33′ (10)	35′ (11)	37′ (11)
8 (200)	15′ (4.5)	20′ (6.2)	25′ (7.5)	28′ (8.7)	32′ (9.6)	35′ (11)	37′ (11)	40′ (12)	43′ (13)	45′ (14)
10 (250)	17′ (5.3)	24′ (7.3)	29′ (8.8)	33′ (10)	37′ (11)	41′ (12)	44′ (13)	47′ (14)	50′ (15)	53′ (16)
12 (300)	18′ (5.6)	27′ (8.2)	31′ (9.6)	36′ (11)	40′ (12)	44′ (13)	48′ (15)	51′ (16)	54′ (17)	57′ (17)
14 (350)	19′ (5.8)	27′ (8.1)	32′ (9.8)	37′ (11)	41′ (12)	45′ (14)	48′ (15)	52′ (16)	55′ (17)	58′ (18)

Leg length based on 90° elbow allowable bending moment:

$$A = \sqrt{\frac{12 * L * E * I}{M}} \tag{D2.7}$$

where I = pipe reinforcement moment of inertia, in^4 (cm^4)
M = 90° elbow allowable bending moment, lb-in (kg-cm)

Table D2.24 provides typical expansion versus leg length.

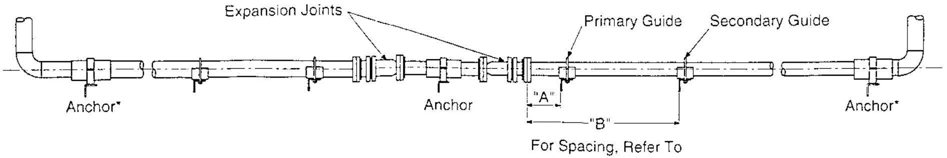

*Anchor Load = $\pi/4$ (I.D.)^2 x (Internal Pressure)

FIGURE D2.14 Typical expansion joint installation.

TABLE D2.25 Distance from Expansion Joint to Primary and Secondary Guides (See Figure D2.14)

Nominal pipe size, NPS (DN)	1 (25)	1½ (40)	2 (50)	3 (80)	4 (100)	6 (150)	8 (200)	10 (250)	12 (300)	14 (350)
Primary guide, "A", inches (mm)	5 (127)	8 (203)	10 (254)	12 (305)	16 (406)	24 (610)	32 (813)	40 (1016)	48 (1219)	56 (1422)
Secondary guide, "B", inches (mm)	18 (457)	30 (762)	36 (914)	42 (1067)	56 (1422)	84 (2134)	112 (2845)	140 (3556)	168 (4267)	196 (7518)

Expansion Joints. The thermal expansion loads and allowable loads for fiberglass pipe are relatively low when compared to metallic pipe. Therefore expansion joints selected for use with fiberglass pipe must have low activation forces. The following equation can be used to determine the maximum allowable expansion joint activation load:

$$Pcr = \frac{\pi^2 * Ec * I}{Lg^2} \tag{D2.8}$$

Where Pcr = critical buckling force of pipe, lbs (kg)
Ec = axial compressive modulus, psi (kg/cm^2)
l = pipe moment of inertia, in^4 (cm^4)
L_l = guide spacing interval, in (cm)

A primary and secondary guide should be used with expansion joints to give the joint proper alignment (see Fig. D2.14). Typically the primary guide is 4 nominal pipe diameters away from the joint and the secondary guide is 14 diameters away from the joint. Refer to Table D2.25.

BELOWGROUND DESIGN

Buried fiberglass pipe is treated as a flexible system where the pipe, trench walls, and bedding material work together to form a complete pipe support system. The elements of this system can best be defined by considering a section of buried flexible pipe and the loads acting on it. These loads, the *dead load* (*backfill*) and the *live loads* (*vehicle traffic*), act downward on the pipe, tending to deflect it into an oval shape. If the bedding material at the sides of the pipe is compacted sufficiently, it will resist the pipe movement and minimize the deflection to an acceptable amount. For this reason, the specification of the pipe, the construction of the trench, and selection of bedding materials must be closely coordinated and controlled.

Burial Design

The fiberglass pipe industry uses Chapter 5 American Water Works Association (AWWA) manual M45 as the design basis for buried pipe systems and Chapter 6 for installation guidelines. AWWA M45 Buried Pipe Design addresses internal pressure, surge pressure, external pressure, head losses, pipe properties, ring bending, deflection, soil loads, wheel loads, combined loading, modulus of soil reaction, buckling, and installation guidelines.

Trench Design

Fiberglass pipe is typically installed in trenches which provide from 2 ft to 20 ft (0.61 to 6.1 m) of cover when backfilled. Special designs have been developed for burial of pipe outside of this range. Trench design will vary depending on pipe diameter and specifications, type of soil, backfill, water table levels, and expected live wheel loads. (See Table D2.26 and Figs. D2.15 through D2.17). During installation it

TABLE D2.26 Nominal Trench Widths*

Nominal pipe size NPS (DN)	Minimum width earth excavation Inches (mm)	Maximum width Inches (mm)
2 (50)	18 (450)	26 (660)
3 (75)	18 (450)	27 (690)
4 (100)	18 (450)	28 (710)
6 (150)	20 (500)	30 (760)
8 (200)	23 (580)	32 (810)
10 (250)	25 (635)	34 (860)
12 (300)	28 (710)	36 (910)
14 (350)	31 (790)	38 (960)
16 (400)	33 (840)	40 (1010)
18 (450)	36 (910)	42 (1070)
20 (500)	39 (990)	44 (1120)
24 (600)	44 (1120)	48 (1220)
30 (750)	52 (1320)	56 (1420)
36 (900)	60 (1520)	64 (1630)
42 (1050)	66 (1680)	70 (1780)
48 (1200)	72 (1830)	80 (2030)
54 (1400)	78 (1980)	86 (2240)
60 (1500)	84 (2130)	96 (2440)
72 (1800)	96 (2440)	108 (2740)

* Trench widths may be wider depending on soil conditions.

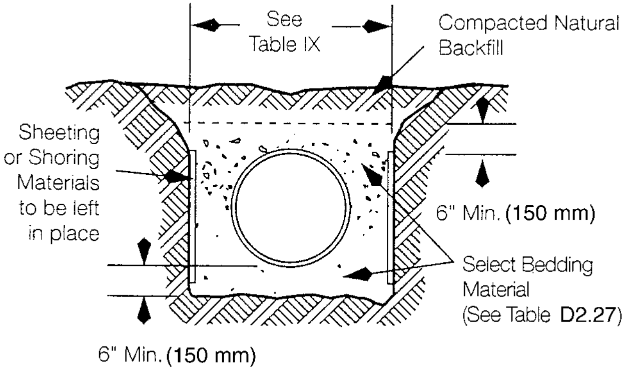
See Table IX
Compacted Natural Backfill
Sheeting or Shoring Materials to be left in place
6" Min. (150 mm)
Select Bedding Material (See Table D2.27)
6" Min. (150 mm)

FIGURE D2.15 Trench shape and bedding for soft and medium consistency soil with sheeting or shoring.

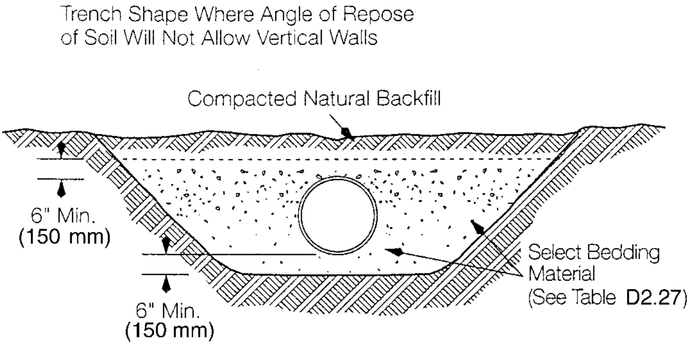
Trench Shape Where Angle of Repose of Soil Will Not Allow Vertical Walls
Compacted Natural Backfill
6" Min. (150 mm)
Select Bedding Material (See Table D2.27)
6" Min. (150 mm)

FIGURE D2.16 Trench shape and bedding for granular type soils (sand, etc.).

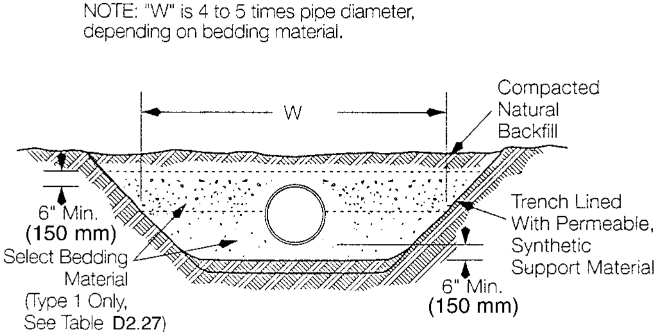
NOTE: "W" is 4 to 5 times pipe diameter, depending on bedding material.
W
Compacted Natural Backfill
6" Min. (150 mm)
Select Bedding Material (Type 1 Only, See Table D2.27)
Trench Lined With Permeable, Synthetic Support Material
6" Min. (150 mm)

FIGURE D2.17 Wide trench for very soft consistency soils.

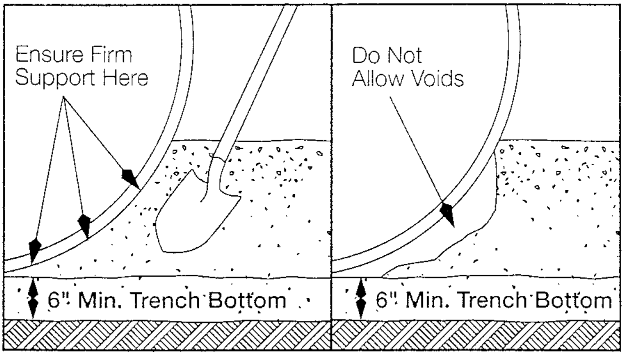

FIGURES D2.18 and D2.19. Flat trench bottom.

is very important that voids are eliminated around the bottom of the flexible fiberglass pipe. The bottom of the trench can be shaped to conform to the bottom ¼ pipe diameter, or, if flat, the bedding material carefully placed and tamped by hand to ensure complete pipe support (see Fig. D2.18 and D2.19).

Bedding Materials

Selection and compaction of bedding materials is critical to the success of a fiberglass buried pipe installation (see Table D2.27). Proper bedding will help prevent excessive deflection of the flexible fiberglass pipe. Bedding materials particle sizes should

TABLE D2.27 Bedding Material for Burial of FIBERCAST® Pipe

Type	Typical names	Description*	Unified soils classification system	Degree of compaction required†
1	Crushed rock or pea gravel	¾″ max. size with less than 50% passing No. 4 sieve	GW, GP	80–85%
2	Sand	Coarse or medium sand, moist	SW, SP	90–95%
3	Gravel, sand, clay and gravel, sand silt mixtures	Coarse grained soils 5% and 12% fines	GW-GM, GW-GC, SW-SM, GP-GM, SP-SM, GP-GC, SW-SC, SP-SC	85–90%
4	Silty gravels, clayey gravels, silty sands, clayey sands	Coarse grained soils more than 12% fines—low compressibility	GM, GC, SM, SC	90–95%

* All types have a maximum particle size of ¾ inch.
† Compaction required: Standard Proctor Density per ASTM D 698.

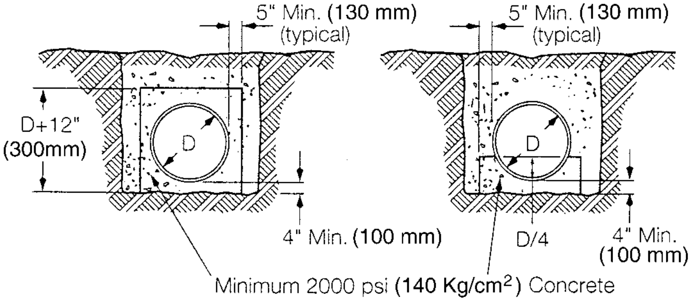

FIGURE D2.20 Typical Class "A" bedding.

be smaller than 3 times the pipe wall thickness to prevent point loading fracturing of the pipe walls.

High Water Table Areas

Areas with high water tables are usually coincident with very poor soil conditions. In most of these areas, it will be necessary to use crushed rock or pea gravel as the bedding and backfill material. In addition, a permeable, synthetic support fabric may be needed as a trench liner to prevent migration of the backfill material into the native soil.

In extreme cases such as soft clay and other plastic soils, it may be necessary to use "Class A" bedding (see Fig. D2.20). If the depth of the pipe cover is less than 1 pipe diameter, tiedowns or concrete encasement is recommended to prevent pipe flotation.

CONNECTION TO OTHER EQUIPMENT AND PIPING MATERIAL

Fiberglass pipe can be connected to other equipment and piping materials using flanges, threaded joints, and grooved adaptors. For flanges it is preferred to connect to flat-faced flanges. When connecting to flat-faced flanges, a full face gasket of 60 to 70 durometer Shore A hardness is usually used. Other specialty-type gaskets can be used, but the piping manufacturer should be contacted for compatibility. Fiberglass flanges can be damaged if excessive torque is applied to the flange or if the proper torque sequence is not followed. Again, the piping manufacturer should be contacted for information on maximum torque and torque sequence. In some cases a flat-faced flange cannot be used, such as on raised-face flanged pumps, valves, and other equipment. When connecting to a raised-face flange you can use a filament-wound fiberglass flange, a hard spacer ring, a steel backup ring, or machine the mating flange so that it is flat-faced. The hard spacer ring is used to fill the gap outside the raised face to prevent bolt loads from bending and breaking the fiberglass flange. In connecting with a flange to other equipment and piping materials, make sure the boltholes line up with the other system and have the same bolt hole pattern. Fiberglass flanges are available in a number of different hole patterns to match the connecting equipment. Fiberglass flanges should use a flat washer under all nuts and bolts used to make up the flange. Threaded joints are also used to connect to other equipment and piping materials. Threaded joints are typically available in NPT thread or 8 and 10 round EUE threads. Before making up threads in a fiberglass piping a system, make sure that all bonded joints are fully cured. Thread lube should be used which will not harden to seal the threads. Field threading of fiberglass piping is possible on some systems, and the manufacturer should be contacted for threading details. Grooved adapters are also available to make up to existing equipment and other piping materials. Fiberglass pipe connections to pumps and other equipment that involve vibration, shock loads, or other mechanical movement should include flexible connectors. Rotating equipment such as pumps can induce extreme vibration in the system if the natural frequency is reached. Flexible connectors used with fiberglass piping systems should have low activation forces due to the flexibility of the fiberglass pipe. When connecting to tanks the wall movement of the tank should be a consideration. Avoid direct connection between two tanks using fiberglass pipe. A change of direction should be utilized or a flexible connector to allow for tank wall movement.

INSULATION AND HEAT TRACING

It is common practice to use insulation and heat tracing for freeze protection in maintaining fluid temperature in fiberglass piping systems. The excellent insulating property of fiberglass piping may eliminate the need for additional insulation or heat tracing in some systems. The low conductivity of fiberglass piping should be considered when designing the system heat tracing and insulation. The additional weight and temperature of heat tracing and insulation should be considered when designing the unsupported spans for the piping system. The heat tracing used should not exceed the maximum temperature rating of the piping system. The maximum heat tracing temperature should also be used in all design calculations. It is very important that hot spots be avoided in the piping system, or damage to the fiberglass pipe can result. When using steam heat tracing, insulation can be placed between the heat tracing and the pipe to prevent hot spots. Thermally conductive tape designed for use with heat tracing can also be used to avoid hot spots in the piping. The most common form of heat tracing fiberglass pipe is with self-regulating electrical tape. Heat tracing should be spiraled around the pipe or run parallel down opposite sides of the pipe to prevent bowing of the system. Care should be taken when designing a system with heat tracing so that the flexibility inherent in a fiberglass piping system does not overstress the heat trace. Refer to Chap. B6.

PAINTING FIBERGLASS PIPING

Fiberglass piping systems can be painted to change the color of the piping or to coat a dulled surface. Fiberglass piping may become dull due to ultraviolet exposure from sunlight or from exposure to chemicals or chemical vapors. Fiberglass piping may have an exterior wax or silicone coating which will prevent adherence of the paint unless the piping is properly prepared. The piping can be prepared by sanding, sandblasting, or allowing it to weather until it has a dull surface. After the piping has been sanded or sandblasted, the surface must be cleaned in preparation for painting. Some paints may require primer before painting. Also, the paint must be compatible with the environment the pipe will be exposed to. Consult the paint manufacturer for details. Paints which have been found to work well with fiberglass piping systems are two component epoxies, two component urethanes, or alkyd enamels.

HYDROSTATIC TESTING

Fiberglass piping systems should always be tested prior to being put into service. It is very important that good hydrostatic test procedures be followed to prevent personal injury or property damage during the test. On aboveground systems all guides and supports must be in place prior to hydrostatic testing. On buried applications the piping should be partially backfilled, with the joints exposed prior to testing. Large or complex systems should be tested in subsections. One of the reasons for doing this is to confirm that proper fabrication techniques have been followed prior to fabricating the complete systems. If the piping system does not have any connections for testing, tie-ins may be required. These can be flange connections, threaded, or grooved connections. The connections can be cut off after the test. For drainage systems expandable plugs can be used for low-pressure testing, but because of the smooth bore of fiberglass piping, testing may be limited to less than five psi on larger diameters. The test pressure used should not exceed 1½ times the rated operating pressure of the lowest rated component of the piping system. If vacuum testing is used, the test should not exceed the external pressure rating of the piping system. The hydrostatic test can be either static or cyclic. For a static test the pressure is maintained in the system for 1 to 8 hours. For a cyclic test it is usually recommended that the pipe be cycled 10 times, from zero psi to 1½ times the rated operating pressure. Then the pipe has static pressure for a minimum of 1 hour. Water should be introduced into the system through a NPS 1 (DN 25) inlet for pipe up to NPS 14 (DN 350) and a NPS 2 (DN 50) inlet for pipe larger than NPS 14 (DN 350). While the water is being introduced, air must be bled from all the high points in the system to prevent the storage of energy which could result in damage to the system. Air can also be removed by using a small pig in the system. When filling and bleeding the system open and close valves slowly to prevent surges of water hammer, which can produce very high internal pipe pressures. When pressurizing the system, raise the pressure no more than 100 to 200 psi (690 to 1380 kPa) per minute. After the test pressure is reached, the system should be monitored for rises in pressure due to sunlight exposure, ambient temperature changes, or wind conditions. During the test when there is water in the system, freezing must be prevented in cold weather. Should leaks occur when the pipe is being tested, release the pressure immediately and repair the leak prior to retesting. When draining the system after the test, all the high points should be vented to prevent vacuum damage in systems not rated for a full vacuum operation.

Fiberglass downhole tubing requires some special precautions because the exterior of the pipe or tubing is normally pressurized with annular testing. If the tubing has a packer on the bottom of the strain, which is normal, the annular test pressure can increase the tensile load on the tubing if the packer moves. The combination of the annular test pressure and any fluid differential pressure must not exceed the external pressure rating of the tubing.

AIR TESTING

A hydrostatic test should be used instead of air or compressed gas pressure tests if possible. When air or compressed gas is used for testing, tremendous amounts of energy can be stored in the system. Many fiberglass pipe manufactures do not recommend air testing. If a failure occurs, the energy may be released catastrophically, which can result in property damage and personal injury. In cases where system contamination or fluid weight prevents the use of hydrostatic testing, air testing may be used with extreme caution. To reduce the risk of air testing, pressurize the system to no more than 15 psi (103.5 kPa). When pressurizing the system with air or compressed gas, the area surrounding the piping must be cleared of personnel to prevent injury. Hold air pressure for 1 hour, then reduce the pressure to one-half the original pressure. Personnel can then enter the area to perform a soap test of all joints. Again, extreme caution must be exercised during air testing to prevent property damage or personal injury.

SAMPLE SPECIFICATION FOR STANDARD WALL EPOXY FIBERGLASS PROCESS PIPING SYSTEMS

1.0 SCOPE

1.1 This specification covers requirements for machine-made NPS1 through NPS16 diameter fiberglass reinforced epoxy thermosetting resin processing piping for chemical petroleum, and industrial applications.

2.0 REFERENCED STANDARDS

2.1	ASTM D 1599	Standard Test Method for Short-Time Hydraulic Failure Pressure of Plastic Pipe, Tubing, and Fittings.
2.2	ASTM D 2105	Standard Test Method for Longitudinal Tensile Properties of ‘‘Fiberglass’’ (Glass-Fiber-Reinforced Thermosetting-Resin) Pipe and Tube.
2.3	ASTM D 2412	Standard Test Method for Determination of External Loading Characteristics of Plastic Pipe by Parallel-Plate Loading.
2.4	ASTM D 2992	Standard Practice for Obtaining Hydrostatic or Pressure Design Basis for ‘‘Fiberglass’’ (Glass-Fiber-Reinforced Thermosetting-Resin) Pipe and Tube.
2.5	ASTM D 2996	Standard Specification for Filament Wound ‘‘Fiberglass’’ (Glass-Fiber-Reinforced Thermosetting-Resin) Pipe.
2.6	ASTM D 2997	Standard Specification for Centrifugal Cast ‘‘Fiberglass’’ (Glass-Fiber-Reinforced Thermosetting-Resin) Pipe.
2.7	ASTM D 3567	Standard Practice for Determining Dimensions of ‘‘Fiberglass’’ (Glass-Fiber-Reinforced Thermosetting-Resin) Pipe and Fittings.
2.8	ASME B31.3	Process Piping.

3.0 PIPE

3.1 The pipe shall be manufactured from epoxy resin to meet or exceed one of the following ASTM Standard Specifications for ''Fiberglass'' Pipe:

	Manufacturing Method	ASTM Designation	Designation Code*
A.	Filament Wound	ASTM D 2996	RTRP 11FF1-3122
B.	Centrifugal Cast	ASTM D 2997	RTRP 21CW-4252

* Typical Designation Code May vary with product selected.

3.2 The pipe shall have a minimum 30 mil** thick epoxy resin liner as determined per ASTM D-3567. The liner shall have a minimum 65 percent by weight resin content.

** Liner thickness may vary by application.

3.3 The pipe shall have a minimum reinforced wall thickness per Table 1. Reinforced wall thickness shall be determined per ASTM D 3567. The reinforced wall shall have a minimum 45 percent by weight continuous glass roving content. Only epoxy resin shall be used in the reinforced wall.

TABLE 1

Nominal size NPS (DN)	1 (25)	1½ (40)	2 (50)	3 (80)	4 (100)	6 (150)	8 (200)	10 (250)	12 (300)	14 (350)	16 (400)
Reinforced wall*** in (mm)	0.055 (1.4)	0.065 (1.7)	0.070 (1.8)	0.070 (1.8)	0.090 (1.8)	0.090 (2.3)	0.120 (3.0)	0.140 (3.6)	0.165 (4.2)	0.170 (4.3)	0.225 (5.7)

*** The reinforced wall may vary by application.

4.0 FITTINGS AND ADHESIVE

4.1 The pipe, fittings, and adhesive shall be produced by the same manufacturer. The piping, including joining method, shall have been commercially available from the manufacturer for a minimum of 5 years.

4.2 The piping system, including pipe, fittings, and joints, shall have a minimum pressure rating of 150 psig (1035 kPa) at 200°F (93°C). (Pressure and Temperature rating may vary by application.)

5.0 QUALITY ASSURANCE

5.1 Inspection for shipping damage shall be performed at the job site prior to piping installation. Damaged pipe and fittings shall not be used.

6.0 INSTALLATION

Installation, including joining, burial, anchoring, guiding, and supporting, shall be per the manufacturer's recommendations.

7.0 FABRICATOR CERTIFICATION

All fiberglass piping field joints shall be made by fabricators who have been certified by the piping manufacturer. Certification by the manufacturer shall be in compliance with ASME B31.3 section A328.2 for the type of joint being made.

SAMPLE SPECIFICATION FOR STANDARD WALL VINYL ESTER FIBERGLASS PROCESS PIPING SYSTEMS

1.0 SCOPE

1.1 This specification covers requirements for machine-made NPS 1 through NPS 16 diameter fiberglass reinforced vinyl ester thermosetting resin process piping for chemical petroleum, and industrial applications.

2.0 REFERENCED STANDARDS

2.1	ASTM D 1599	Standard Test Method for Short-Time Hydraulic Failure Pressure of Plastic Pipe, Tubing, and Fittings.
2.2	ASTM D 2105	Standard Test Method for Longitudinal Tensile Properties of "Fiberglass" (Glass-Fiber-Reinforced Thermosetting-Resin) Pipe and Tube.
2.3	ASTM D 2412	Standard Test Method for Determination of External Loading Characteristics of Plastic Pipe by Parallel-Plate Loading.
2.4	ASTM D 2992	Standard Practice for Obtaining Hydrostatic or Pressure Design Basis for "Fiberglass" (Glass-Fiber-Reinforced Thermosetting-Resin) Pipe and Tube.
2.5	ASTM D 2996	Standard Specification for Filament Wound "Fiberglass" (Glass-Fiber-Reinforced Thermosetting-Resin) Pipe.
2.6	ASTM D 2997	Standard Specification for Centrifugal Cast "Fiberglass" (Glass-Fiber-Reinforced Thermosetting-Resin) Pipe.
2.7	ASTM D 3567	Standard Practice for Determining Dimensions of "Fiberglass" (Glass-Fiber-Reinforced Thermosetting-Resin) Pipe and Fittings.
2.8	ASME B31.3	Process Piping.

3.0 PIPE

3.1 The pipe shall be manufactured from vinyl ester resin to meet or exceed one of the following ASTM Standard Specifications for "Fiberglass" Pipe:

	Manufacturing Method	**ASTM Designation**	**Designation Code***
A.	Filament Wound	ASTM D 2996	RTRP 12EE1-2112
B.	Centrifugal Cast	ASTM D 2997	RTRP 22BU-4222

* Typical Designation Code May vary with product selected.

3.2 The pipe shall have a minimum 50 mil** thick vinyl ester resin liner as determined per ASTM D 3567. The liner shall have a minimum 65 percent by weight resin content.

** Liner thickness may vary by application.

3.3 The pipe shall have a minimum reinforced wall thickness per Table 1. Reinforced wall thickness shall be determined per ASTM D 3567. The reinforced wall shall have a minimum 45 percent by weight continuous glass roving content. Only vinyl ester resin shall be used in the reinforced wall.

TABLE 1

Nominal size NPS (DN)	1 (25)	1½ (40)	2 (50)	3 (80)	4 (100)	6 (150)	8 (200)	10 (250)	12 (300)	14 (350)	16 (400)
Reinforced wall*** in (mm)	0.075 (1.9)	0.080 (2.0)	0.085 (2.2)	0.090 (2.3)	0.090 (2.3)	0.110 (2.8)	0.130 (3.3)	0.150 (3.8)	0.160 (4.1)	0.160 (4.1)	0.200 (5.1)

*** The reinforced wall may vary by application.

4.0 FITTINGS AND ADHESIVE

4.1 The pipe, fittings, and adhesive shall be produced by the same manufacturer. The piping, including joining method, shall have been commercially available from the manufacturer for a minimum of 5 years.

4.2 The piping system, including pipe, fittings, and joints, shall have a minimum pressure rating of 150 psig (1035 kPa) at 175°F (79°C). (Pressure and Temperature rating may vary by application.)

5.0 QUALITY ASSURANCE

5.1 Inspection for shipping damage shall be performed at the job site prior to piping installation. Damaged pipe and fittings shall not be used.

6.0 INSTALLATION

Installation, including joining, burial, anchoring, guiding, and supporting, shall be per the manufacturer's recommendations.

7.0 FABRICATOR CERTIFICATION

All fiberglass piping field joints shall be made by fabricators who have been certified by the piping manufacturer. Certification by the manufacturer shall be in compliance with ASME B31.3 section A328.2 for the type of joint being made.

GLOSSARY

Catalyst. The chemical added to vinyl ester resins which cause them to harden. Usually Methyl Ethyl Ketone Peroxide (MEKP).

Centrifugal Casting. A process for making pipe in which resin and fiberglass are placed into the interior of a spinning rotary mold, forming the pipe through centrifugal force.

Chopped Fiber. Continuous glass fibers cut into short (0.125 to 2.0 in or 3 to 50 mm) lengths.

Chopped Strand Mat. Coarse fabric sheets made from chopped strands randomly placed and held together by resin binders.

Cure. The hardening of a thermoset resin system by the action of heat or chemical action.

Cure Time. The time it take for a resin system to reach full strength.

Curing Agent. Any of a number of chemicals added to epoxy resin to cause it to harden. Aromatic amine curing agents are commonly used for high-temperature corrosion service. Anhydride cured epoxy resins are typically used for less stringent applications.

Epoxy Resin. A thermosetting resin used in caustic, solvent, salt, and some acid solutions.

Fabmat. A combination of woven roving and chopped strand mat held together with resin binders. Usually used for making contact molded fittings and butt weld joints.

Filament. A single fiber of glass (e.g., a monofilament).

Gel Time. The time it takes for a resin system to harden so flow will not occur.

Hardener. Any of a number of chemicals added to resin which cause hardening to occur.

Liner. The resin-rich interior surface of the pipe or fitting. The liner provides the corrosion resistance for chemical service.

Nexus. Porous surfacing mat of synthetic used to provide a resin-rich layer or liner.

Novolac Resin. A premium epoxy vinyl ester resin used in a broad range of corrosive applications.

Reinforcement. Typically fibers of glass used to provide strength and stiffness to a composite material.

Resin. The polymer or plastic material used to bind the glass fibers together in fiberglass pipe and fittings.

Roving. A collection of one or more strands of glass filaments. The typical form of glass fiber used in the manufacture of filament-wound pipe.

Thermoset Resin. A resin cured by heat or chemical additives. Once cured, a thermoset resin cannot be remelted.

Veil. Surfacing mat of porous fabric made from filaments. Used to provide a resin-rich layer or liner.

Vinyl Ester Resin. A thermosetting resin used in strong acids, chlorine, and oxidizing agents.

Woven Roving. Coarse clothlike material made by weaving fiberglass roving.

REFERENCES

1. ANSI/AWWA C950, AWWA Standard for Fiberglass Pressure Pipe, American Water Works Association, Denver, Colo., October 1, 1995.
2. K.C. Bachman, and J.C. Munday, ‘‘Evaluation of the Hazard of Static Electricity in Nonmetallic POL Systems—Static Effects in Handling Jet Fuel in Fiberglass Reinforced Plastic Pipe,’’ *Technical Report No. AFWL-TR-72-90,* U.S. Air Force Weapons Laboratory, Kirkland Air Force Base, New Mexico, June 1973.
3. J.W. Ball, ‘‘Report of Flow Tests—Fiberglass Nozzle,’’ Colorado State University, Fort Collins, Colorado, November 1971.
4. W.F. Britt, ‘‘Providing Proper Supports for Reinforced Thermoset and Non-Reinforced Thermoplastic Process Pipe,’’ Paper No. 92, Corrosion ’83, National Association of Corrosion Engineers, Houston, Texas, 1983.
5. D. Daavettilla and K.J. Oswald, ‘‘The Use of Fiberglass Pipe with a Ceramic Bead Lining to Handle Bottom Ash Slurry Applications,’’ 7th International Coal and Lignite Utilization Conference, *Industrial Publications,* Houston, 1984, pp. 400–407.
6. J.S. Dorsey, ‘‘Using Reinforced Plastics for Process Equipment,’’ *Chemical Engineering,* September 15, 1985, pp. 104–114.
7. *Derakane News,* Dow Chemical U.S.A., Midland, Mich. November 1983, p. 4.
8. H.A. Ershig, ‘‘Above Ground FRP Pipe Design and Support Systems,’’ TAPPI 1987 Engineering Conference, Technical Association of the Pulp and Paper Industry, Atlanta, 1987, pp. 61–71.
9. *Fiberglass Pipe Handbook,* SPI Fiberglass Pipe Institute, New York, 1992.

10. Norman Hamner, *Nonmetals Section—Corrosion Data Survey,* 5th ed., National Association of Corrosion Engineers, Houston, 1975.
11. *Technical Handbook,* 5th ed., Rubber Expansion Joint Division, Fluid Sealing Association, Philadelphia, 1980, Chap. IV, pp. 10–11.
12. D.L. Klumb, ''Union Electric Company's Solid Waste Utilization System,'' Union Electric Company, St. Louis, Mo., March 20, 1975.
13. J.H. Mallinson, *Corrosion-Resistant Plastic Composites in Chemical Plant Design,* Marcel Dekker, Inc., New York, 1988, p. 447.
14. A.M. May, ''The Influence of Codes and Standards on Uses of Fiberglass Pipe,'' Chem Show Technical Presentation, New York, 1985.
15. K.J. Oswald, ''Evaluation of Epoxy and Vinyl Ester Filament Wound Pipe Removed from Chemical and Petroleum Services,'' *Managing Corrosion with Plastics, vols, I, II, and III,* NACE, Houston, 1977, pp. 240–244.
16. K.J. Oswald, ''The Effect of 25 Years of Oil Field Flow Line Service on Epoxy Fiber Glass Pipe,'' *Materials Performance,* vol. 27, no. 8, NACE, Houston, 1988, pp. 81–83.
17. K.J. Oswald, ''The Effects of Chemical and Petroleum Service on Epoxy and Vinyl Ester Filament Wound Pipe,'' K.J. Oswald, Corrosion '84, Paper No. 18, NACE, Houston, 1984.
18. K.J. Oswald, ''The Performance of Fiberglass Pipe with an Abrasion Resistant Ceramic Bead Liner in Bottom Ash Slurry Applications,'' Paper No. 529, Corrosion '89, NACE, Houston, 1989.
19. J.A. Rolston, ''When and How to Select Plastics,'' *Chemical Engineering,* October 29, 1984, pp. 70–75.
20. H. Summerhill, ''Using Fiberglass Pipe in Condensate Return Systems,'' *Plant Engineering,* August 17, 1978, pp. 133–135.
21. W.A. Szymanski, ''The Use and Performance of RTP in Waste Water Treatment Applications,'' Paper No. 320, Corrosion '83, NACE, Houston, 1983.
22. R.C. Talbot, ''Using Fiberglass Reinforced Plastics,'' *Chemical Engineering,* October 29, 1984, pp. 76–82.
23. A.T. Tuthill, ''Installed Cost of Corrosion Resistant Piping,'' Parts 1, 2, 3, 4, and 5, *Chemical Engineering,* March 3, pp. 113–115; March 31, pp. 125–128; May 26, pp. 99–100; and June 23, pp. 131–133, 1986.
24. P.E. Woodward and A.M. May ''Designing and Specifying of Fiberglass Piping Systems,'' XVIII, *Journee d'Etude Internationales,* Center de Documentation du Verre Textile et des Plastics Renforces, Paris, France, March 23, 1983.
25. D.E. Wyman, ''Pipeline Insertion Under the Sea,'' *Journal of New England Water Works Association,* vol. 89, no. 3, 1975.

PARTE

APPENDIXES

APPENDIX E1

CONVERSION TABLES

Ervin L. Geiger, P.E.
Engineering Supervisor
Bechtel Power Corporation
Frederick, Maryland

TABLE E1.1 Conversion Factors—Frequently Used U.S. Customary Units to SI Standard Units

To convert	To	Multiply by	To convert	To	Multiply by
Acceleration			Power		
Feet per sq second	Meters per sq second	0.3048	Btu per second	Watt	1054.350
Area					
Square feet	Square meters	0.09290304	Foot pounds per second	Watt	1.355818
Energy			Horsepower	Watt	746.
Btu	Joule	1055.06	Pressure		
Calorie	Joule	4.19002	Atmosphere	Newtons per sq meter	101325.0
Foot pound	Joule	1.355818	Bar	Newtons per sq meter	100000.
Watthour	Joule	3600.355818	Kilogram per sq cm	Newtons per sq meter	98066.50
Force			Pounds per sq in.	Newtons per sq meter	6894.757
Dyne	Newton	0.00001	Torr (mm Hg 0°C)	Newtons per sq meter	133.322
Kilogram	Newton	9.80665			
Pound	Newton	4.448222	Viscosity		
Length			Centipoise	Newton second per meter	0.001
Foot	Meter	0.3048000			
Mile (U.S. statute)	Meter	1609.344	Pounds per foot second	Newton second per meter	1.488164
Mass			Volume		
Pound	Kilogram	0.4535924	Cubic foot	Cubic meter	0.02831685
Slug	Kilogram	14.59390	Gallon (U.S. liquid)	Cubic meter	0.003785412
Ton (2000 lb)	Kilogram	907.1847			

TABLE E1.2 Mass Equivalents

To obtain →, multiply ↓, by ↘	Pound (avdp)	Ounce (avdp)	Gram	Kilogram	Slug	Ton (short)*
Pound (avdp)	1	16	453.6	0.4536	0.0310	0.0005
Ounce (avdp)	0.0625	1	28.3495		0.0019	
Gram	0.0022	0.0353	1	0.001	68.5 E−5	
Kilogram	2.2046	35.274	1000	1	0.0685	0.0011
Slug	32.174	514.784	1.459 E+4	14.5939	1	
Ton (short)*	2000			907.185		1

* 1 short ton = 0.8926 long tons.
1 short ton = 0.9072 metric tons.

TABLE E1.3 Length Equivalents

To obtain →, multiply ↓, by ↘	Inch	Foot	Miles (statute)	Millimeter	Centimeter	Meter	Kilometer
Inch	1	0.08333		25.4	2.54	0.0254	
Foot	12	1		304.8	30.48	0.3048	
Mile (statute)	63360	5280	1			1609.344	1.609344
Millimeter	0.03937	0.003281		1	0.1	0.001	
Centimeter	0.3937	0.032808		10	1	0.01	
Meter	39.3701	3.28084		1000	100	1	0.001
Kilometer	39,370	3280.8	0.62137		100,000	1000	1

TABLE E1.4 Area Equivalents

To obtain →, multiply ↓, by ↘	Square inch	Square foot	Acre	Square millimeter	Square centimeter	Square meter
Square inch	1	0.006944		645.16	6.4516	0.00064516
Square foot	144	1	2.2956 E−5	92903.04	929.0304	0.09290
Acre		43560	1			4046.8564
Square millimeter	0.00155			1	0.01	1 E−6
Square centimeter	0.1550	0.001076	2.5 E−8	100	1	0.0001
Square meter	1550.0031	10.76391	0.000247	1 E+6	10,000	1

TABLE E1.5 Volume Equivalents

To obtain →, multiply ↓, by ↘	U.S. gallon	Imperial gallon	Cubic inch	Cubic foot	Liter	Cubic meter	Barrel (oil)
U.S. gallon	1	0.83267	231	0.13368	3.7853	0.00378	0.02381
Imperial gallon	1.2009	1	277.42	0.16054	4.5459	0.00455	0.02859
Cubic inch	0.004329	0.003604	1	0.000579	0.0164	0.000016	0.00010
Cubic foot	7.4805	6.2288	1728	1	28.316	0.02832	0.17813
Liter	0.26418	0.21997	61.025	0.0353	1	0.001	0.00629
Cubic meter	264.17	219.97	61023.74	35.3147	1000	1	6.2899
Barrel (oil)*	42	34.977	9702.00	5.614	158.983	0.15876	1

* The capacity of a barrel varies with industries as follows:
1 barrel of beer = 31 U.S. gallons
1 barrel of wine = 31.5 U.S. gallons
1 barrel of oil = 42 U.S. gallons
1 barrel of whiskey = 45 U.S. gallons

TABLE E1.6 Volumetric Flow Rate Equivalents

To obtain →, multiply ↓, by ↘	U.S. gallons per minute	Imperial gallons per minute	U.S. million gallons per day	Cubic feet per second	Cubic meter per hour	Liter per second	Barrel (42 gallons) per minute	Barrel (42 gallons) per day
U.S. gallons per minute	1	0.8327	0.00144	0.00223	0.2271	0.0631	0.0238	34.286
Imperial gallons per minute	1.201	1	0.00173	0.002676	0.2727	0.0758	0.02859	41.176
U.S. million gallons per day	694.4	578.25	1	1.547	157.7	43.8	16.53	23810
Cubic feet per second	448.83	373.7	0.646	1	101.9	28.32	10.686	15388
Cubic meters per second	15850	13199	22.83	35.315	3600	1000	377.4	543447
Cubic meters per minute	264.2	220	0.3804	0.5886	60.0	16.667	6.290	9058
Cubic meters per hour	4.403	3.67	0.00634	0.00982	1	0.2778	0.1048	151
Liter per seconds	15.85	13.20	0.0228	0.0353	3.60	1	0.3773	543.3
Liter per minute	0.2642	0.220	0.000380	0.000589	0.060	0.0167	0.00629	9.055
Barrel (42 gallons) per minute	42	34.97	0.0605	0.09357	9.5256	2.65	1	1440
Barrel (42 gallons) per day	0.0292	0.0243	0.000042	0.000065	0.00662	0.00184	0.00069	1

TABLE E1.7 Density Equivalents

To obtain →, multiply ↓, by ↘	Grams per cubic centimeter	Pounds per cubic inch	Pounds per cubic foot	Slugs per cubic foot	Kilograms per cubic meter
Grams per cubic centimeter	1	0.03613	62.42806	1.9403	1000
Pounds per cubic inch	27.67991	1	1728	53.708	27679.905
Pounds per cubic foot	0.01602	0.0005787	1	0.31081	16.01846
Slugs per cubic foot	0.51538	0.0186	32.17	1	515.379
Kilograms per cubic meter	0.001	3.6128E-5	0.06243	0.00194	1

TABLE E1.8 Pressure Equivalents

To obtain →, multiply ↓, by ↘	Pounds per square inch	Pounds per square foot	Atmosphere	Kilograms per square centimeter	Kilograms per square meter	Inches water (68°F)	Foot water (68°F)	Inches mercury (32°F)	Millimeters mercury (32°F)	Bar	Mega-Pascal (MPa)
Pounds per square inch	1	144	0.068046	0.070307	703.070	27.7276	2.310636	2.03602	51.71497	0.068947	0.006895
Pounds per square foot	0.0069444	1	0.000473	0.000488	4.88242	0.1926	0.01605	0.014139	0.35913	0.000479	0.0000479
Atmosphere	14.696	2116.22	1	1.03323	10332.27	407.484	33.9570	29.9213	760	1.01325	0.101325
Kilograms per square centimeter	14.2233	2048.155	0.96784	1	10000.	394.38	32.8650	28.959	735.559	0.98067	0.098067
Kilograms per square meter	0.001422	0.204768	0.0000968	0.0001	1	0.03944	0.003287	0.002896	0.073556	0.000098	0.0000098
Inches water (68°F)	0.036065	5.1972	0.002454	0.00253	25.375	1	0.08333	0.073430	1.8651	0.002466	0.000249
Foot water (68°F)	0.432781	62.3205	0.029449	0.03043	304.275	12	1	0.88115	22.3813	0.029839	0.0029839
Inches mercury (32°F)	0.491154	70.7262	0.033421	0.03453	345.316	13.6185	1.1349	1	25.4	0.033864	0.0033864
Millimeters mercury (32°F)	0.0193368	2.78450	0.0013158	0.0013595	13.59509	0.53616	0.044680	0.03937	1	0.001333	0.0001333
Bar	14.5038	2088.55	0.98692	1.01972	10197.2	402.156	33.5130	29.5300	750.062	1	0.10
MPa	145.038	20885.5	9.8692	10.1972	101972.0	4021.56	335.130	295.300	7500.62	10.0	1

TABLE E1.9 Energy Equivalents

To obtain →, multiply ↓, by ↘	Btu*	Calorie (gram)†	Foot pound	Horsepower hour	Joule	Kilowatt hour	Kilogram meter
Btu	1	251.8	778.169	0.000393	1055.06	0.000293	107.586
Calorie (gram)†	0.00397	1	3.08596	1.56 E−6	4.184	1.16 E−6	0.426649
Foot pound	0.00129	0.32405	1	5.05 E−7	1.35582	3.77 E−7	0.13825
Horsepower hour	2544.5	641616	1.98 E+6	1	2.68 E+6	0.7457	273745
Joule	0.00095	0.2390	0.73756	3.72 E−7	1	2.77 E−7	0.102
Kilowatt hour	3412.97	860421	2.65 E+6	1.34102	3.6 E+6	1	367098
Kilogram meter	0.00929	2.344	7.233	3.65 E−6	9.807	2.72 E−6	1

* Based on 1 Btu = 778.169 ft · lb.

† Based on 1 Cal = 4.1840 joules.

TABLE E1.10 Power Equivalents*

To obtain →, multiply ↓, by ↘	Horsepower	Foot pound per second	Watt	Btu per hour
Horsepower	1	550	745.7	2544
Foot pound per second	0.00182	1	1.3558	4.626
Watt	0.00134	0.7376	1	3.412
Btu per hour	0.00039	0.2161	0.2931	1

* Based on 1 Btu = 778.169 ft · lb.

TABLE E1.11 Conversion Factors for Thermal Conductivity, k

To obtain →, multiply ↓, by ↘	Watt/ m · °K	Cal/ (s · cm · °K)	Btu/ (h · ft · °R)	Btu · in/ (h · ft^2 · °R)
W/m · °K	1	0.0022901	0.57818	6.9381
W/cm · °K	100	0.23901	57.818	693.81
W/ft · °R	5.9055	0.014114	3.4144	40.973
W/in · °R	70.866	0.16937	40.973	491.68
cal/(s · cm · °K)	418.4	1	241.91	2902.9
cal/(s · in · °R)	296.50	0.70866	171.43	2057.2
kcal/(h · m · °K)	1.1622	0.0027778	0.67197	8.0636
Btu/(s · ft · °R)	6226.5	14.882	3600	43200
Btu/(s · in · °R)	74717 E+4	178.58	43200	5.184 E+5
Btu · in/(s · ft^2 · °R)	518.87	1.2401	300	3600
Btu/(h · ft · °R)	1.7296	0.0041338	1	12
Btu/(h · in · °R)	20.755	0.049605	12	144
Btu in/(h · ft^2 · °R)	0.14413	0.00034448	0.083333	1
lb · ft/(h · ft · °R)	0.0022241	5.3157 E−6	0.0012859	0.015431

TABLE E1.12 Prefix Names of Multiples and Submultiples of Units

Prefix	Measure	Decimal equivalent	Exponential expression
Alto	one-quintillionth	0.000 000 000 000 000 001	E−18
Femto	one-quadrillionth	0.000 000 000 000 001	E−15
Pico	one-trillionth	0.000 000 000 001	E−12
Nano	one-billionth	0.000 000 001	E−9
Micro	one-millionth	0.000 001	E−6
Milli	one-thousandth	0.001	E−3
Centi	one-hundredth	0.01	E−2
Deci	one-tenth	0.1	E−1
Uni	one	1.0	E0
Deka	ten	10.0	E+1
Hecto	one hundred	100.0	E+2
Kilo	one thousand	1 000.0	E+3
Mega	one million	1 000 000.0	E+6
Giga	one billion	1 000 000 000.0	E+9
Tera	one trillion	1 000 000 000 000.0	E+12

APPENDIX E2

PIPE PROPERTIES

Dr. Chakrapani Basavaraju
Senior Engineering Specialist
Bechtel Power Corporation
Frederick, Maryland

TABLE E2.1 Principal Properties of Commercial Pipe (in U.S. Customary Units)

Nominal pipe size, outside diam. (in)	Schedule number*			Wall thickness (in)	Inside diam. (in)	Inside area (in^2)	Metal area (in^2)	Ft^2 outside surface per ft	Ft^2 inside surface per ft	Weight per ft (lb)†	Weight of water per ft (lb)	Moment of inertia (in^4)	Elastic section modulus (in^3)	Radius gyration (in)	Plastic section modulus (in^3)
	a	b	c												
½ *0.840*	. . .	. . .	5S	0.065	0.710	0.396	0.158	0.220	0.186	0.538	0.171	0.012	0.029	0.275	0.039
	. . .	. . .	10S	0.083	0.674	0.357	0.197	0.220	0.177	0.671	0.155	0.014	0.034	0.269	0.048
	40	Std	40S	0.109	0.622	0.304	0.250	0.220	0.163	0.851	0.132	0.017	0.041	0.261	0.059
	80	XS	80S	0.147	0.546	0.234	0.320	0.220	0.143	1.088	0.101	0.020	0.048	0.251	0.072
	160	. . .	. . .	0.187	0.466	0.171	0.383	0.220	0.122	1.304	0.074	0.022	0.053	0.240	0.082
	. . .	XXS	. . .	0.294	0.252	0.050	0.504	0.220	0.066	1.714	0.022	0.024	0.058	0.220	0.096
¾ *1.050*	. . .	. . .	5S	0.065	0.920	0.665	0.201	0.275	0.241	0.684	0.288	0.025	0.047	0.349	0.063
	. . .	. . .	10S	0.083	0.884	0.614	0.252	0.275	0.231	0.857	0.266	0.030	0.057	0.343	0.078
	40	Std	40S	0.113	0.824	0.533	0.333	0.275	0.216	1.131	0.230	0.037	0.071	0.334	0.100
	80	XS	80S	0.154	0.742	0.432	0.435	0.275	0.194	1.474	0.188	0.045	0.085	0.321	0.125
	160	. . .	. . .	0.218	0.614	0.296	0.570	0.275	0.161	1.937	0.128	0.053	0.100	0.304	0.154
	. . .	XXS	. . .	0.308	0.434	0.148	0.718	0.275	0.114	2.441	0.064	0.058	0.110	0.284	0.179
1 *1.315*	. . .	. . .	5S	0.065	1.185	1.103	0.2553	0.344	0.310	0.868	0.478	0.0500	0.0760	0.443	0.102
	. . .	. . .	10S	0.109	1.097	0.945	0.413	0.344	0.2872	1.404	0.409	0.0757	0.1151	0.428	0.159
	40	Std	40S	0.133	1.049	0.864	0.494	0.344	0.2746	1.679	0.374	0.0874	0.1329	0.421	0.187
	80	XS	80S	0.179	0.957	0.719	0.639	0.344	0.2520	2.172	0.311	0.1056	0.1606	0.407	0.233
	160	. . .	. . .	0.250	0.815	0.522	0.836	0.344	0.2134	2.844	0.2261	0.1252	0.1903	0.387	0.289
	. . .	XXS	. . .	0.358	0.599	0.2818	1.076	0.344	0.1570	3.659	0.1221	0.1405	0.2137	0.361	0.343
1½ *1.900*	. . .	. . .	5S	0.065	1.770	2.461	0.375	0.497	0.463	1.274	1.067	0.1580	0.1663	0.649	0.219
	. . .	. . .	10S	0.109	1.682	2.222	0.613	0.497	0.440	2.085	0.962	0.2469	0.2599	0.634	0.350
	40	Std	40S	0.145	1.610	2.036	0.799	0.497	0.421	2.718	0.882	0.310	0.326	0.623	0.448
	80	XS	80S	0.200	1.500	1.767	1.068	0.497	0.393	3.631	0.765	0.391	0.412	0.605	0.581
	160	. . .	. . .	0.281	1.338	1.406	1.429	0.497	0.350	4.859	0.608	0.483	0.508	0.581	0.744
	. . .	XXS	. . .	0.400	1.100	0.950	1.885	0.497	0.288	6.408	0.412	0.568	0.598	0.549	0.921
2 *2.375*	. . .	. . .	5S	0.065	2.245	3.96	0.472	0.622	0.588	1.604	1.716	0.315	0.2652	0.817	0.347
	. . .	. . .	10S	0.109	2.157	3.65	0.776	0.622	0.565	2.638	1.582	0.499	0.420	0.802	0.560
	40	Std	40S	0.154	2.067	3.36	1.075	0.622	0.541	3.653	1.455	0.666	0.561	0.787	0.761
	80	XS	80S	0.218	1.939	2.953	1.477	0.622	0.508	5.022	1.280	0.868	0.731	0.766	1.018
	160	. . .	. . .	0.343	1.689	2.240	2.190	0.622	0.422	7.444	0.971	1.163	0.979	0.729	1.430
	. . .	XXS	. . .	0.436	1.503	1.774	2.656	0.622	0.393	9.029	0.769	1.312	1.104	0.703	1.667

TABLE E2.1 Principal Properties of Commercial Pipe (in U.S. Customary Units) (*Continued*)

Nominal pipe size, outside diam. (in)	Schedule number*			Wall thickness (in)	Inside diam. (in)	Inside area (in^2)	Metal area (in^2)	Ft^2 outside surface per ft	Ft^2 inside surface per ft	Weight per ft (lb)†	Weight of water per ft (lb)	Moment of inertia (in^4)	Elastic section modulus (in^3)	Radius gyration (in)	Plastic section modulus (in^3)
	a	b	c												
3 *3.500*	. . .	. . .	5S	0.083	3.334	8.73	0.891	0.916	0.873	3.03	3.78	1.301	0.744	1.208	0.969
	. . .	. . .	10S	0.120	3.260	8.35	1.274	0.916	0.853	4.33	3.61	1.822	1.041	1.196	1.372
	40	Std	40S	0.216	3.068	7.39	2.228	0.916	0.803	7.58	3.20	3.02	1.724	1.164	2.333
	80	XS	80S	0.300	2.900	6.61	3.02	0.916	0.759	10.25	2.864	3.90	2.226	1.136	3.081
	160	. . .	. . .	0.437	2.626	5.42	4.21	0.916	0.687	14.32	2.348	5.03	2.876	1.094	4.128
	. . .	XXS	. . .	0.600	2.300	4.15	5.47	0.916	0.602	18.58	1.801	5.99	3.43	1.047	5.118
4 *4.500*	. . .	. . .	5S	0.083	4.334	14.75	1.152	1.178	1.135	3.92	6.40	2.811	1.249	1.562	1.620
	. . .	. . .	10S	0.120	4.260	14.25	1.651	1.178	1.115	5.61	6.17	3.96	1.762	1.549	2.303
	40	Std	40S	0.237	4.026	12.73	3.17	1.178	1.054	10.79	5.51	7.23	3.21	1.510	4.312
	80	XS	80S	0.337	3.826	11.50	4.41	1.178	1.002	14.98	4.98	9.61	4.27	1.477	5.853
	120	. . .	. . .	0.437	3.626	10.33	5.58	1.178	0.949	18.96	4.48	11.65	5.18	1.445	7.242
	160	. . .	. . .	0.531	3.438	9.28	6.62	1.178	0.900	22.51	4.02	13.27	5.90	1.416	8.415
	. . .	XXS	. . .	0.674	3.152	7.80	8.10	1.178	0.825	27.54	3.38	15.29	6.79	1.374	9.968
6 *6.625*	. . .	. . .	5S	0.109	6.407	32.2	2.231	1.734	1.677	5.37	13.98	11.85	3.58	2.304	4.628
	. . .	. . .	10S	0.134	6.357	31.7	2.733	1.734	1.664	9.29	13.74	14.40	4.35	2.295	5.647
	40	Std	40S	0.280	6.065	28.89	5.58	1.734	1.588	18.97	12.51	28.14	8.50	2.245	11.280
	80	XS	80S	0.432	5.761	26.07	8.40	1.734	1.508	28.57	11.29	40.5	12.23	2.195	16.600
	120	. . .	. . .	0.562	5.501	23.77	10.70	1.734	1.440	36.39	10.30	49.6	14.98	2.153	20.718
	160	. . .	. . .	0.718	5.189	21.15	13.33	1.734	1.358	45.30	9.16	59.0	17.81	2.104	25.176
	. . .	XXS	. . .	0.864	4.897	18.83	15.64	1.734	1.282	53.16	8.17	66.3	20.03	2.060	28.890
8 *8.625*	. . .	. . .	5S	0.109	8.407	55.5	2.916	2.258	2.201	9.91	24.07	26.45	6.13	3.01	7.905
	. . .	. . .	10S	0.148	8.329	54.5	3.94	2.258	2.180	13.40	23.59	35.4	8.21	3.00	10.636
	20	. . .	. . .	0.250	8.125	51.8	6.58	2.258	2.127	22.36	22.48	57.7	13.39	2.962	17.540
	30	. . .	. . .	0.277	8.071	51.2	7.26	2.258	2.113	24.70	22.18	63.4	14.69	2.953	19.311
	40	Std	40S	0.322	7.981	50.0	8.40	2.258	2.089	28.55	21.69	72.5	16.81	2.938	22.210
	60	. . .	. . .	0.406	7.813	47.9	10.48	2.258	2.045	35.64	20.79	88.8	20.58	2.909	27.448
	80	XS	80S	0.500	7.625	45.7	12.76	2.258	1.996	43.39	19.80	105.7	24.52	2.878	33.050
	100	. . .	. . .	0.593	7.439	43.5	14.96	2.258	1.948	50.87	18.84	121.4	28.14	2.847	38.326
	120	. . .	. . .	0.718	7.189	40.6	17.84	2.258	1.882	60.63	17.60	140.6	32.6	2.807	45.013
	140	. . .	. . .	0.812	7.001	38.5	19.93	2.258	1.833	67.76	16.69	153.8	35.7	2.777	49.745
	. . .	XXS	. . .	0.875	6.875	37.1	21.30	2.258	1.800	72.42	16.09	162.0	37.6	2.757	52.778
	160	. . .	. . .	0.906	6.813	36.5	21.97	2.258	1.784	74.69	15.80	165.9	38.5	2.748	54.230

TABLE E2.1 Principal Properties of Commercial Pipe (in U.S. Customary Units) (*Continued*)

Nominal pipe size, outside diam. (in)	Schedule number*			Wall thickness (in)	Inside diam. (in)	Inside area (in^2)	Metal area (in^2)	Ft^2 outside surface per ft	Ft^2 inside surface per ft	Weight per ft (lb)†	Weight of water per ft (lb)	Moment of inertia (in^4)	Elastic section modulus (in^3)	Radius gyration (in)	Plastic section modulus (in^3)
	a	b	c												
10 *10.750*	. . .	. . .	5S	0.134	10.482	86.3	4.52	2.815	2.744	15.15	37.4	63.7	11.85	3.75	15.103
	. . .	. . .	10S	0.165	10.420	85.3	5.49	2.815	2.728	18.70	36.9	76.9	14.30	3.74	18.489
	20	. . .	. . .	0.250	10.250	82.5	8.26	2.815	2.683	28.04	35.8	113.7	21.16	3.71	27.568
	. . .	. . .	. . .	0.279	10.192	81.6	9.18	2.815	2.668	31.20	35.3	125.9	23.42	3.70	30.597
	30	. . .	. . .	0.307	10.136	80.7	10.07	2.815	2.654	34.24	35.0	137.5	25.57	3.69	33.490
	40	Std	40S	0.365	10.020	78.9	11.91	2.815	2.623	40.48	34.1	160.8	29.90	3.67	39.381
	60	XS	80S	0.500	9.750	74.7	16.10	2.815	2.553	54.74	32.3	212.0	39.4	3.63	52.573
	80	. . .	. . .	0.593	9.564	71.8	18.92	2.815	2.504	64.33	31.1	244.9	45.6	3.60	61.246
	100	. . .	. . .	0.718	9.314	68.1	22.63	2.815	2.438	76.93	29.5	286.2	53.2	3.56	72.384
	120	. . .	. . .	0.843	9.064	64.5	26.24	2.815	2.373	89.20	28.0	324	60.3	3.52	82.939
	140	. . .	. . .	1.000	8.750	60.1	30.6	2.815	2.291	104.13	26.1	368	68.4	3.47	95.396
	160	. . .	. . .	1.125	8.500	56.7	34.0	2.815	2.225	115.65	24.6	399	74.3	3.43	104.695
12 *12.750*	. . .	. . .	5S	0.156	12.438	121.4	6.17	3.34	3.26	20.99	52.7	122.2	19.20	4.45	24.744
	. . .	. . .	10S	0.180	12.390	120.6	7.11	3.34	3.24	24.20	52.2	140.5	22.03	4.44	28.443
	20	. . .	. . .	0.250	12.250	117.9	9.84	3.34	3.21	33.38	51.1	191.9	30.1	4.42	39.068
	30	. . .	. . .	0.330	12.090	114.8	12.88	3.34	3.17	43.77	49.7	248.5	39.0	4.39	50.917
	. . .	Std	40S	0.375	12.000	113.1	14.58	3.34	3.14	49.56	49.0	279.3	43.8	4.38	57.445
	40	. . .	. . .	0.406	11.938	111.9	15.74	3.34	3.13	53.53	48.5	300	47.1	4.37	61.886
	. . .	XS	80S	0.500	11.750	108.4	19.24	3.34	3.08	65.42	47.0	362	56.7	4.33	75.073
	60	. . .	. . .	0.562	11.626	106.2	21.52	3.34	3.04	73.16	46.0	401	62.8	4.31	83.543
	80	. . .	. . .	0.687	11.376	101.6	26.04	3.34	2.978	88.51	44.0	475	74.5	4.27	100.078
	100	. . .	. . .	0.843	11.064	96.1	31.5	3.34	2.897	107.20	41.6	562	88.1	4.22	119.717
	120	. . .	. . .	1.000	10.750	90.8	36.9	3.34	2.814	125.49	39.3	642	100.7	4.17	138.396
	140	. . .	. . .	1.125	10.500	86.6	41.1	3.34	2.749	139.68	37.5	701	109.9	4.13	152.508
	160	. . .	. . .	1.312	10.126	80.5	47.1	3.34	2.651	160.27	34.9	781	122.6	4.07	172.399

TABLE E2.1 Principal Properties of Commercial Pipe (in U.S. Customary Units) (*Continued*)

Nominal pipe size, outside diam. (in)	Schedule number*			Wall thickness (in)	Inside diam. (in)	Inside area (in^2)	Metal area (in^2)	Ft^2 outside surface per ft	Ft^2 inside surface per ft	Weight per ft (lb)†	Weight of water per ft (lb)	Moment of inertia (in^4)	Elastic section modulus (in^3)	Radius gyration (in)	Plastic section modulus (in^3)
	a	b	c												
14 *14,000*	. . .	. . .	5S	0.156	13.688	147.20	6.78	3.67	3.58	23.0	63.7	162.6	23.2	4.90	29.900
	. . .	. . .	10S	0.188	13.624	145.80	8.16	3.67	3.57	27.7	63.1	194.6	27.8	4.88	35.867
	10	. . .	. . .	0.250	13.500	143.1	10.80	3.67	3.53	36.71	62.1	255.4	36.5	4.86	47.271
	20	. . .	. . .	0.312	13.376	140.5	13.42	3.67	3.50	45.68	60.9	314	44.9	4.84	58.467
	30	Std	. . .	0.375	13.250	137.9	16.05	3.67	3.47	54.57	59.7	373	53.3	4.82	69.633
	40	. . .	. . .	0.437	13.126	135.3	18.62	3.67	3.44	63.37	58.7	429	61.2	4.80	80.416
	. . .	XS	. . .	0.500	13.000	132.7	21.21	3.67	3.40	72.09	57.5	484	69.1	4.78	91.167
	. . .	. . .	. . .	0.562	12.876	130.2	23.73	3.67	3.37	80.66	56.5	537	76.7	4.76	101.545
	60	. . .	. . .	0.593	12.814	129.0	24.98	3.67	3.35	84.91	55.9	562	80.3	4.74	106.660
	. . .	. . .	. . .	0.625	12.750	127.7	26.26	3.67	3.34	89.28	55.3	589	84.1	4.73	111.889
	. . .	. . .	. . .	0.687	12.626	125.2	28.73	3.67	3.31	97.68	54.3	638	91.2	4.71	121.869
	80	. . .	. . .	0.750	12.500	122.7	31.2	3.67	3.27	106.13	53.2	687	98.2	4.69	131.813
	. . .	. . .	. . .	0.875	12.250	117.9	36.1	3.67	3.21	122.66	51.1	781	111.5	4.65	150.956
	100	. . .	. . .	0.937	12.126	115.5	38.5	3.67	3.17	130.73	50.0	825	117.8	4.63	160.166
	120	. . .	. . .	1.093	11.814	109.6	44.3	3.67	3.09	150.67	47.5	930	132.8	4.58	182.519
	140	. . .	. . .	1.250	11.500	103.9	50.1	3.67	3.01	170.22	45.0	1127	146.8	4.53	203.854
	160	. . .	. . .	1.406	11.188	98.3	55.6	3.67	2.929	189.12	42.6	1017	159.6	4.48	223.931
16 *16.000*	. . .	. . .	5S	0.165	15.670	192.90	8.21	4.19	4.10	28.00	83.5	257	32.2	5.60	41.375
	. . .	. . .	10S	0.188	15.624	191.7	9.34	4.19	4.09	32.00	83.0	292	36.5	5.59	47.006
	10	. . .	. . .	0.250	15.500	188.7	12.37	4.19	4.06	42.05	81.8	384	48.0	5.57	62.021
	20	. . .	. . .	0.312	15.376	185.7	15.38	4.19	4.03	52.36	80.5	473	59.2	5.55	76.798
	30	Std	. . .	0.375	15.250	182.6	18.41	4.19	3.99	62.58	79.1	562	70.3	5.53	91.570
	. . .	. . .	. . .	0.437	15.126	179.7	21.37	4.19	3.96	72.64	77.9	648	80.9	5.50	105.872
	40	XS	. . .	0.500	15.000	176.7	24.35	4.19	3.93	82.77	76.5	732	91.5	5.48	120.167
	. . .	. . .	. . .	0.562	14.876	173.8	27.26	4.19	3.89	92.66	75.4	813	106.6	5.46	134.002
	. . .	. . .	. . .	0.625	14.750	170.9	30.2	4.19	3.86	102.63	74.1	894	112.2	5.44	147.826
	60	. . .	. . .	0.656	14.688	169.4	31.6	4.19	3.85	107.50	73.4	933	116.6	5.43	154.542
	. . .	. . .	. . .	0.687	14.626	168.0	33.0	4.19	3.83	112.36	72.7	971	121.4	5.42	161.201
	. . .	. . .	. . .	0.750	14.500	165.1	35.9	4.19	3.80	122.15	71.5	1047	130.9	5.40	174.563
	80	. . .	. . .	0.843	14.314	160.9	40.1	4.19	3.75	136.46	69.7	1157	144.6	5.37	193.866
	. . .	. . .	. . .	0.875	14.250	159.5	41.6	4.19	3.73	141.35	69.1	1193	154.1	5.36	200.393
	100	. . .	. . .	1.031	13.938	152.5	48.5	4.19	3.65	164.83	66.1	1365	170.6	5.30	231.383
	120	. . .	. . .	1.218	13.564	144.5	56.6	4.19	3.55	192.29	62.6	1556	194.5	5.24	266.745
	140	. . .	. . .	1.437	13.126	135.3	65.7	4.19	3.44	223.64	58.6	1760	220.0	5.17	305.750
	160	. . .	. . .	1.593	12.814	129.0	72.1	4.19	3.35	245.11	55.9	1894	236.7	5.12	331.993

TABLE E2.1 Principal Properties of Commercial Pipe (in U.S. Customary Units) (*Continued*)

Nominal pipe size, outside diam. (in)	Schedule number*			Wall thickness (in)	Inside diam. (in)	Inside area (in^2)	Metal area (in^2)	Ft^2 outside surface per ft	Ft^2 inside surface per ft	Weight per ft (lb)†	Weight of water per ft (lb)	Moment of inertia (in^4)	Elastic section modulus (in^3)	Radius gyration (in)	Plastic section modulus (in^3)
	a	b	c												
18 *18.000*	. . .	. . .	5S	0.165	17.670	245.20	9.24	4.71	4.63	31.00	106.2	368	40.8	6.31	52.486
	. . .	. . .	10S	0.188	17.624	243.90	10.52	4.71	4.61	36.00	105.7	417	46.4	6.30	59.649
	10	. . .	. . .	0.250	17.500	240.5	13.94	4.71	4.58	47.39	104.3	549	61.0	6.28	78.771
	20	. . .	. . .	0.312	17.376	237.1	17.34	4.71	4.55	59.03	102.8	678	75.5	6.25	97.624
	. . .	Std	. . .	0.375	17.250	233.7	20.76	4.71	4.52	70.59	101.2	807	89.6	6.23	116.508
	30	. . .	. . .	0.437	17.126	230.4	24.11	4.71	4.48	82.06	99.9	931	103.4	6.21	134.824
	. . .	XS	. . .	0.500	17.000	227.0	27.49	4.71	4.45	93.45	98.4	1053	117.0	6.19	153.167
	40	. . .	. . .	0.562	16.876	223.7	30.8	4.71	4.42	104.75	97.0	1172	130.2	6.17	170.954
	. . .	. . .	. . .	0.625	16.750	220.5	34.1	4.71	4.39	115.98	95.5	1289	143.3	6.15	188.763
	. . .	. . .	. . .	0.687	16.626	217.1	37.4	4.71	4.35	127.03	94.1	1403	156.3	6.13	206.029
	60	. . .	. . .	0.750	16.500	213.8	40.6	4.71	4.32	138.17	92.7	1515	168.3	6.10	223.313
	. . .	. . .	. . .	0.875	16.250	207.4	47.1	4.71	4.25	160.04	89.9	1731	192.8	6.06	256.831
	80	. . .	. . .	0.937	16.126	204.2	50.2	4.71	4.22	170.75	88.5	1834	203.8	6.04	273.078
	100	. . .	. . .	1.156	15.688	193.3	61.2	4.71	4.11	207.96	83.7	2180	242.2	5.97	328.496
	120	. . .	. . .	1.375	15.250	182.6	71.8	4.71	3.99	244.14	79.2	2499	277.6	5.90	380.904
	140	. . .	. . .	1.562	14.876	173.8	80.7	4.71	3.89	274.23	75.3	2750	306	5.84	423.335
	160	. . .	. . .	1.781	14.438	163.7	90.7	4.71	3.78	308.51	71.0	3020	336	5.77	470.386
20 *20.000*	. . .	. . .	5S	0.188	19.634	302.40	11.70	5.24	5.14	40	131.0	574	57.4	7.00	71.869
	. . .	. . .	10S	0.218	19.564	300.6	13.55	5.24	5.12	46	130.2	663	66.3	6.99	85.313
	10	. . .	. . .	0.250	19.500	298.6	15.51	5.24	5.11	52.73	129.5	757	75.7	6.98	97.521
	. . .	. . .	. . .	0.312	19.376	294.9	19.30	5.24	5.07	65.40	128.1	935	93.5	6.96	120.947
	20	Std	. . .	0.375	19.250	291.0	23.12	5.24	5.04	78.60	126.0	1114	111.4	6.94	144.445
	. . .	. . .	. . .	0.437	19.126	287.3	26.86	5.24	5.01	91.31	124.6	1286	128.6	6.92	167.273
	30	XS	. . .	0.500	19.000	283.5	30.6	5.24	4.97	104.13	122.8	1457	145.7	6.90	190.167
	. . .	. . .	. . .	0.562	18.876	279.8	34.3	5.24	4.94	116.67	121.3	1624	162.4	6.88	212.403
	40	. . .	. . .	0.593	18.814	278.0	36.2	5.24	4.93	122.91	120.4	1704	170.4	6.86	223.412
	. . .	. . .	. . .	0.625	18.750	276.1	38.0	5.24	4.91	129.33	119.7	1787	178.7	6.85	234.701
	. . .	. . .	. . .	0.687	18.626	272.5	41.7	5.24	4.88	141.71	118.1	1946	194.6	6.83	256.354
	. . .	. . .	. . .	0.750	18.500	268.8	45.4	5.24	4.84	154.20	116.5	2105	210.5	6.81	278.063
	60	. . .	. . .	0.812	18.376	265.2	48.9	5.24	4.81	166.40	115.0	2257	225.7	6.79	299.140

TABLE E2.1 Principal Properties of Commercial Pipe (in U.S. Customary Units) (*Continued*)

Nominal pipe size, outside diam. (in)	Schedule number*			Wall thickness (in)	Inside diam. (in)	Inside area (in^2)	Metal area (in^2)	Ft^2 outside surface per ft	Ft^2 inside surface per ft	Weight per ft (lb)†	Weight of water per ft (lb)	Moment of inertia (in^4)	Elastic section modulus (in^3)	Radius gyration (in)	Plastic section modulus (in^3)
	a	b	c												
	...	...	...	0.875	18.250	261.6	52.6	5.24	4.78	178.73	113.4	2409	240.9	6.77	320.268
	80	...	...	1.031	17.938	252.7	61.4	5.24	4.70	208.87	109.4	2772	277.2	6.72	371.343
	100	...	...	1.281	17.438	238.8	75.3	5.24	4.57	256.10	103.4	3320	332	6.63	449.564
	120	...	...	1.500	17.000	227.0	87.2	5.24	4.45	296.37	98.3	3760	376	6.56	514.500
	140	...	...	1.750	16.500	213.8	100.3	5.24	4.32	341.10	92.6	4220	422	6.48	584.646
	160	...	...	1.968	16.064	202.7	111.5	5.24	4.21	379.01	87.9	4590	459	6.41	642.442
22 *22.000*	...	...	5S	0.188	21.624	367.3	12.88	5.76	5.66	44	159.1	766	69.7	7.71	89.446
	...	...	10S	0.218	21.564	365.2	14.92	5.76	5.65	51	158.2	885	80.4	7.70	103.435
	10	...	...	0.250	21.500	363.1	17.16	5.76	5.63	58	157.4	1010	91.8	7.69	118.271
	20	Std	...	0.375	21.250	354.7	25.48	5.76	5.56	87	153.7	1490	135.4	7.65	175.383
	30	XS	...	0.500	21.000	346.4	33.77	5.76	5.50	115	150.2	1953	177.5	7.61	231.167
	...	...	...	0.625	20.750	338.2	41.97	5.76	5.43	143	146.6	2400	218.2	7.56	285.638
	...	...	...	0.750	20.500	330.1	50.07	5.76	5.37	170	143.1	2829	257.2	7.52	338.813
	60	...	...	0.875	20.250	322.1	58.07	5.76	5.30	197	139.6	3245	295.0	7.47	390.706
	80	...	...	1.125	19.750	306.4	73.78	5.76	5.17	251	132.8	4029	366.3	7.39	490.711
	100	...	...	1.375	19.250	291.0	89.09	5.76	5.04	303	126.2	4758	432.6	7.31	585.779
	120	...	...	1.625	18.750	276.1	104.02	5.76	4.91	354	119.6	5432	493.8	7.23	676.034
	140	...	...	1.875	18.250	261.6	118.55	5.76	4.78	403	113.3	6054	550.3	7.15	761.602
	160	...	...	2.125	17.750	247.4	132.68	5.76	4.65	451	107.2	6626	602.4	7.07	842.607
24 *24.000*	...	...	5S	0.218	23.564	436.1	16.29	6.28	6.17	55	188.9	1152	96.0	8.41	123.301
	10	...	10S	0.250	23.500	434	18.65	6.28	6.15	63.41	188.0	1316	109.6	8.40	141.021
	...	...	...	0.312	23.376	430	23.20	6.28	6.12	78.93	186.1	1629	135.8	8.38	175.080
	20	Std	...	0.375	23.250	425	27.83	6.28	6.09	94.62	183.8	1943	161.9	8.35	209.320
	...	...	...	0.437	23.126	420	32.4	6.28	6.05	109.97	182.1	2246	187.4	8.33	242.657
	...	XS	...	0.500	23.000	415	36.9	6.28	6.02	125.49	180.1	2550	212.5	8.31	276.167
	30	...	...	0.562	22.876	411	41.4	6.28	5.99	140.80	178.1	2840	237.0	8.29	308.788
	...	...	...	0.625	22.750	406	45.9	6.28	5.96	156.03	176.2	3140	261.4	8.27	341.576
	40	...	...	0.687	22.626	402	50.3	6.28	5.92	171.17	174.3	3420	285.2	8.25	373.490
	...	...	...	0.750	22.500	398	54.8	6.28	5.89	186.24	172.4	3710	309	8.22	405.563
	60	...	...	0.968	22.064	382	70.0	6.28	5.78	238.11	165.8	4650	388	8.15	513.800
	80	...	...	1.218	21.564	365	87.2	6.28	5.65	296.36	158.3	5670	473	8.07	632.768
	100	...	...	1.531	20.938	344	108.1	6.28	5.48	367.40	149.3	6850	571	7.96	774.131
	120	...	...	1.812	20.376	326	126.3	6.28	5.33	429.39	141.4	7830	652	7.87	894.044
	140	...	...	2.062	19.876	310	142.1	6.28	5.20	483.13	134.5	8630	719	7.79	995.313
	160	...	...	2.343	19.314	293	159.4	6.28	5.06	541.94	127.0	9460	788	7.70	1103.215

TABLE E2.1 Principal Properties of Commercial Pipe (in U.S. Customary Units) (*Continued*)

Nominal pipe size, outside diam. (in)	Schedule number*			Wall thickness (in)	Inside diam. (in)	Inside area (in^2)	Metal area (in^2)	Ft^2 outside surface per ft	Ft^2 inside surface per ft	Weight per ft (lb)†	Weight of water per ft (lb)	Moment of inertia (in^4)	Elastic section modulus (in^3)	Radius gyration (in)	Plastic section modulus (in^3)
	a	b	c												
26 *26.000*	. . .	. . .	. . .	0.250	25.500	510.7	19.85	6.81	6.68	67	221.4	1646	126.6	9.10	165.771
	10	. . .	. . .	0.312	25.376	505.8	25.18	6.81	6.64	86	219.2	2076	159.7	9.08	205.891
	. . .	Std	. . .	0.375	25.250	500.7	30.19	6.81	6.61	103	217.1	2478	190.6	9.06	246.258
	20	XS	. . .	0.500	25.000	490.9	40.06	6.81	6.54	136	212.8	3259	250.7	9.02	325.167
	. . .	. . .	. . .	0.625	24.750	481.1	49.82	6.81	6.48	169	208.6	4013	308.7	8.98	402.513
	. . .	. . .	. . .	0.750	24.500	471.4	59.49	6.81	6.41	202	204.4	4744	364.9	8.93	478.313
	. . .	. . .	. . .	0.875	24.250	461.9	69.07	6.81	6.35	235	200.2	5458	419.9	8.89	552.581
	. . .	. . .	. . .	1.00	24.000	452.4	78.54	6.81	6.28	267	196.1	6149	473.0	8.85	625.333
	. . .	. . .	. . .	1.125	23.750	443.0	87.91	6.81	6.22	299	192.1	6813	524.1	8.80	696.586
28 *28.000*	. . .	. . .	. . .	0.250	27.500	594.0	21.80	7.33	7.20	74	257.3	2098	149.8	9.81	192.521
	10	. . .	. . .	0.312	27.376	588.6	27.14	7.33	7.17	92	255.0	2601	185.8	9.78	239.197
	. . .	Std	. . .	0.375	27.250	583.2	32.54	7.33	7.13	111	252.6	3105	221.8	9.77	286.195
	20	XS	. . .	0.500	27.000	572.6	43.20	7.33	7.07	147	248.0	4085	291.8	9.72	378.167
	30	. . .	. . .	0.625	26.750	562.0	53.75	7.33	7.00	183	243.4	5038	359.8	9.68	468.451
	. . .	. . .	. . .	0.750	26.500	551.6	64.21	7.33	6.94	218	238.9	5964	426.0	9.64	557.063
	. . .	. . .	. . .	0.875	26.250	541.2	74.56	7.33	6.87	253	234.4	6865	490.3	9.60	644.018
	. . .	. . .	. . .	1.000	26.000	530.9	84.82	7.33	6.81	288	230.0	7740	552.8	9.55	729.333
	. . .	. . .	. . .	1.125	25.750	520.8	94.98	7.33	6.74	323	225.6	8590	613.6	9.51	813.023
30 *30.000*	. . .	. . .	5S	0.250	29.500	683.4	23.37	7.85	7.72	79	296.3	2585	172.3	10.52	221.271
	10	. . .	10S	0.312	29.376	677.8	29.19	7.85	7.69	99	293.7	3201	213.4	10.50	275.000
	. . .	Std	. . .	0.375	29.250	672.0	34.90	7.85	7.66	119	291.2	3823	254.8	10.48	329.133
	20	XS	. . .	0.500	29.000	660.5	46.34	7.85	7.59	158	286.2	5033	335.5	10.43	435.167
	30	. . .	. . .	0.625	28.750	649.2	57.68	7.85	7.53	196	281.3	6213	414.2	10.39	539.388
	40	. . .	. . .	0.750	28.500	637.9	68.92	7.85	7.46	234	276.6	7371	491.4	10.34	641.813
	. . .	. . .	. . .	0.875	28.250	620.7	90.06	7.85	7.39	272	271.8	8494	566.2	10.30	742.456
	. . .	. . .	. . .	1.000	28.000	615.7	91.11	7.85	7.33	310	267.0	9591	639.4	10.26	841.333
	. . .	. . .	. . .	1.125	27.750	604.7	102.05	7.85	7.26	347	262.2	10653	710.2	10.22	938.461

TABLE E2.1 Principal Properties of Commercial Pipe (in U.S. Customary Units) (*Continued*)

Nominal pipe size, outside diam. (in)	Schedule number*			Wall thickness (in)	Inside diam. (in)	Inside area (in^2)	Metal area (in^2)	Ft^2 outside surface per ft	Ft^2 inside surface per ft	Weight per ft (lb)†	Weight of water per ft (lb)	Moment of inertia (in^4)	Elastic section modulus (in^3)	Radius gyration (in)	Plastic section modulus (in^3)
	a	b	c												
32 *32.000*	. . .	. . .	. . .	0.250	31.500	779.2	24.93	8.38	8.25	85	337.8	3141	196.3	11.22	252.021
	10	. . .	. . .	0.312	31.376	773.2	31.02	8.38	8.21	106	335.2	3891	243.2	11.20	313.299
	. . .	Std	. . .	0.375	31.250	766.9	37.25	8.38	8.18	127	332.5	4656	291.0	11.18	375.070
	20	XS	. . .	0.500	31.000	754.7	49.48	8.38	8.11	168	327.2	6140	383.8	11.14	496.167
	30	. . .	. . .	0.625	30.750	742.5	61.59	8.38	8.05	209	321.9	7578	473.6	11.09	615.326
	40	. . .	. . .	0.688	30.624	736.6	67.68	8.38	8.02	230	319.0	8298	518.6	11.07	674.652
	. . .	. . .	. . .	0.750	30.500	730.5	73.63	8.38	7.98	250	316.7	8990	561.9	11.05	732.563
	. . .	. . .	. . .	0.875	30.250	718.3	85.52	8.38	7.92	291	311.6	10372	648.2	11.01	847.893
	. . .	. . .	. . .	1.000	30.000	706.8	97.38	8.38	7.85	331	306.4	11680	730.0	10.95	961.333
	. . .	. . .	. . .	1.125	29.750	694.7	109.0	8.38	7.79	371	301.3	13023	814.0	10.92	1072.898
34 *34.000*	. . .	. . .	. . .	0.250	33.500	881.2	26.50	8.90	8.77	90	382.0	3773	221.9	11.93	284.771
	10	. . .	. . .	0.312	33.376	874.9	32.99	8.90	8.74	112	379.3	4680	275.3	11.91	354.093
	. . .	Std	. . .	0.375	33.250	867.8	39.61	8.90	8.70	135	376.2	5597	329.2	11.89	424.008
	20	XS	. . .	0.500	33.000	855.3	52.62	8.90	8.64	179	370.8	7385	434.4	11.85	561.167
	30	. . .	. . .	0.625	32.750	841.9	65.53	8.90	8.57	223	365.0	9124	536.7	11.80	696.263
	40	. . .	. . .	0.688	32.624	835.9	72.00	8.90	8.54	245	362.1	9992	587.8	11.78	763.575
	. . .	. . .	. . .	0.750	32.500	829.3	78.34	8.90	8.51	266	359.5	10829	637.0	11.76	829.313
	. . .	. . .	. . .	0.875	32.250	816.4	91.01	8.90	8.44	310	354.1	12501	735.4	11.72	960.331
	. . .	. . .	. . .	1.000	32.000	804.2	103.67	8.90	8.38	353	348.6	14114	830.2	11.67	1089.333
	. . .	. . .	. . .	1.125	31.750	791.3	116.13	8.90	8.31	395	343.2	15719	924.7	11.63	1216.336
36 *36.000*	. . .	. . .	. . .	0.250	35.500	989.7	28.11	9.42	9.29	96	429.1	4491	249.5	12.64	319.521
	10	. . .	. . .	0.312	35.376	982.9	34.95	9.42	9.26	119	426.1	5565	309.1	12.62	397.384
	. . .	Std	. . .	0.375	35.250	975.8	42.01	9.42	9.23	143	423.1	6664	370.2	12.59	475.945
	20	XS	. . .	0.500	35.000	962.1	55.76	9.42	9.16	190	417.1	8785	488.1	12.55	630.167
	30	. . .	. . .	0.625	34.750	948.3	69.50	9.42	9.10	236	411.1	10872	604.0	12.51	782.201
	40	. . .	. . .	0.750	34.500	934.7	83.01	9.42	9.03	282	405.3	12898	716.5	12.46	932.063
	. . .	. . .	. . .	0.875	34.250	920.6	96.50	9.42	8.97	328	399.4	14903	827.9	12.42	1079.768
	. . .	. . .	. . .	1.000	34.000	907.9	109.96	9.42	8.90	374	393.6	16851	936.2	12.38	1225.333
	. . .	. . .	. . .	1.125	33.750	894.2	123.19	9.42	8.89	419	387.9	18763	1042.4	12.34	1368.773
42 *42.000*	. . .	. . .	. . .	0.250	41.500	1352.6	32.82	10.99	10.86	112	586.4	7126	339.3	14.73	435.771
	. . .	Std	. . .	0.375	41.250	1336.3	49.08	10.99	10.80	167	579.3	10627	506.1	14.71	649.758
	20	XS	. . .	0.500	41.000	1320.2	65.18	10.99	10.73	222	572.3	14037	668.4	14.67	861.167
	30	. . .	. . .	0.625	40.750	1304.1	81.28	10.99	10.67	276	565.4	17373	827.3	14.62	1070.013
	40	. . .	. . .	0.750	40.500	1288.2	97.23	10.99	10.60	330	558.4	20689	985.2	14.59	1276.313
	. . .	. . .	. . .	1.000	40.000	1256.6	128.81	10.99	10.47	438	544.9	27080	1289.5	14.50	1681.333
	. . .	. . .	. . .	1.250	39.500	1225.3	160.03	10.99	10.34	544	531.2	33233	1582.5	14.41	2076.554
	. . .	. . .	. . .	1.500	39.000	1194.5	190.85	10.99	10.21	649	517.9	39181	1865.7	14.33	2461.500

TABLE E2.1 Principal Properties of Commercial Pipe (in U.S. Customary Units) (*Continued*)

Notes: The following formulas were used in the computation of the values shown in the table:

Weight† of pipe per foot (pounds) $= 10.6802t(D - t)$
Weight of water per foot (pounds) $= 0.3405d^2$
Square feet outside surface per foot $= 0.2618D$
Square feet inside surface per foot $= 0.2618d$
Inside area (square inches) $= 0.785d^2$
Area of metal (square inches) $= 0.785(D^2 - d^2)$
Moment of inertia (inches^4) $= 0.0491(D^4 - d^4)$
$= A_M R_g^2$
Elastic section modulus (inches^3) $= \dfrac{0.0982(D^4 - d^4)}{D}$
Plastic section modulus $= \dfrac{(D^3 - d^3)}{6}$
Radius of gyration (inches) $= 0.25\sqrt{D^2 + d^2}$

A_M = area of metal (square inches)
d = inside diameter (inches)
D = outside diameter (inches)
R_g = radius of gyration (inches)
t = pipe wall thickness (inches)

* Schedule numbers: Standard weight pipe and Schedule 40 are the same in all sizes through 10 in; from 12 in through 24 in, standard weight pipe has a wall thickness of ⅜ in. Extra-strong weight pipe and Schedule 80 are the same in all sizes through 8 in; from 8 in through 24 in, extra-strong weight pipe has a wall thickness of ½ in. Double extra-strong weight pipe has no corresponding schedule number.

a: ANSI/ASME B36.10 Steel Pipe Schedule Numbers.

b: ANSI/ASME N36.10 Steel Pipe Nominal Wall Thickness Designations.

c: ANSI/ASME B36.19 Stainless Steel Pipe Schedule Numbers.

† The ferritic stainless steels may be about 5 percent less and the austenitic stainless steels about 2 percent greater than the values shown in this table which are based on weights for carbon steel.

TABLE E2.1M Principal Properties of Commercial Pipe (Metric Data)

d_n			D	t	d	A_i	A_m	S_o	S_i	w_p	w_w	I	z_e	R_g	z_p
Nom dia	Schedule		Outside dia	Wall thick	Inside dia	Inside area	Metal area	Outside surf	Inside surf	Pipe wt.	Water wt.	Mom of inert	Elast sec mod	Rad of gyr	Plast sec mod
mm			mm	mm	mm	cm^2	cm^2	m^2/m	m^2/m	kg/m	kg/m	cm^4	cm^3	cm	cm^3
3	10S		10.3	1.2446	7.811	0.479	0.354	0.0324	0.0245	0.277	0.048	0.037	0.072	0.323	0.103
	Std	40	10.3	1.7272	6.846	0.368	0.465	0.0324	0.0215	0.364	0.037	0.044	0.086	0.309	0.129
	XS	80	10.3	2.413	5.474	0.235	0.598	0.0324	0.0172	0.468	0.024	0.051	0.099	0.292	0.155
6	10S		13.7	1.651	10.398	0.849	0.625	0.0430	0.0327	0.489	0.085	0.116	0.169	0.430	0.241
	Std	40	13.7	2.235	9.23	0.669	0.805	0.0430	0.0290	0.630	0.067	0.137	0.200	0.413	0.298
	XS	80	13.7	3.023	7.654	0.460	1.014	0.0430	0.0240	0.794	0.046	0.156	0.228	0.392	0.354
10	10S		17.145	1.651	13.843	1.505	0.804	0.0539	0.0435	0.629	0.151	0.244	0.285	0.551	0.398
	Std	40	17.145	2.311	12.523	1.232	1.077	0.0539	0.0393	0.843	0.123	0.303	0.354	0.531	0.513
	XS	80	17.145	3.2	10.745	0.907	1.402	0.0539	0.0338	1.098	0.091	0.359	0.418	0.506	0.633
15	5S		21.336	1.651	18.034	2.554	1.021	0.0670	0.0567	0.799	0.255	0.498	0.467	0.698	0.641
	10S		21.336	2.108	17.12	2.302	1.273	0.0670	0.0538	0.997	0.230	0.596	0.558	0.684	0.782
	Std	40	21.336	2.769	15.798	1.960	1.615	0.0670	0.0496	1.265	0.196	0.711	0.667	0.664	0.962
	XS	80	21.336	3.734	13.868	1.510	2.065	0.0670	0.0436	1.617	0.151	0.836	0.783	0.636	1.174
		160	21.336	4.75	11.836	1.100	2.475	0.0670	0.0372	1.938	0.110	0.921	0.863	0.610	1.342
	XXS		21.336	7.468	6.4	0.322	3.254	0.0670	0.0201	2.547	0.032	1.009	0.946	0.557	1.575
20	5S		26.67	1.651	23.368	4.289	1.298	0.0838	0.0734	1.016	0.429	1.020	0.765	0.886	1.035
	10S		26.67	2.108	22.454	3.960	1.627	0.0838	0.0705	1.273	0.396	1.236	0.927	0.872	1.275
	Std	40	26.67	2.87	20.93	3.441	2.146	0.0838	0.0658	1.680	0.344	1.541	1.156	0.848	1.634
	XS	80	26.67	3.912	18.846	2.790	2.797	0.0838	0.0592	2.190	0.279	1.864	1.398	0.816	2.046
		160	26.67	5.537	15.596	1.910	3.676	0.0838	0.0490	2.878	0.191	2.193	1.645	0.772	2.529
	XXS		26.67	7.823	11.024	0.954	4.632	0.0838	0.0346	3.626	0.095	2.411	1.808	0.721	2.938
25	5S		33.401	1.651	30.099	7.115	1.647	0.1049	0.0946	1.289	0.712	2.081	1.246	1.124	1.666
	10S		33.401	2.769	27.863	6.097	2.665	0.1049	0.0875	2.086	0.610	3.151	1.887	1.087	2.605
	Std	40	33.401	3.378	26.645	5.576	3.186	0.1049	0.0837	2.494	0.558	3.635	2.177	1.068	3.058
	XS	80	33.401	4.547	24.307	4.640	4.122	0.1049	0.0764	3.227	0.464	4.396	2.632	1.033	3.817
		160	33.401	6.35	20.701	3.366	5.396	0.1049	0.0650	4.225	0.337	5.208	3.119	0.982	4.732
	XXS		33.401	9.093	15.215	1.818	6.944	0.1049	0.0478	5.436	0.182	5.846	3.501	0.918	5.624
32	5S		42.164	1.651	38.862	11.862	2.101	0.1325	0.1221	1.645	1.186	4.318	2.048	1.434	2.711
	10S		42.164	2.769	36.626	10.536	3.427	0.1325	0.1151	2.683	1.054	6.681	3.169	1.396	4.305
	Std	40	42.164	3.556	35.052	9.650	4.313	0.1325	0.1101	3.377	0.965	8.104	3.844	1.371	5.316
	XS	80	42.164	4.851	32.462	8.276	5.686	0.1325	0.1020	4.452	0.828	10.063	4.773	1.330	6.792
		160	42.164	6.35	29.464	6.818	7.145	0.1325	0.0926	5.594	0.682	11.815	5.604	1.286	8.230
	XXS		42.164	9.703	22.758	4.068	9.895	0.1325	0.0715	7.747	0.407	14.198	6.734	1.198	10.529
40	5S		48.26	1.651	44.958	15.875	2.418	0.1516	0.1412	1.893	1.587	6.573	2.724	1.649	3.588
	10S		48.26	2.769	42.722	14.335	3.957	0.1516	0.1342	3.098	1.433	10.275	4.258	1.611	5.737
	Std	40	48.26	3.683	40.894	13.134	5.158	0.1516	0.1285	4.038	1.313	12.899	5.345	1.581	7.335
	XS	80	48.26	5.08	38.1	11.401	6.891	0.1516	0.1197	5.395	1.140	16.283	6.748	1.537	9.516

TABLE E2.1M Principal Properties of Commercial Pipe (Metric Data) (*Continued*)

d_n		D	t	d	A_i	A_m	S_o	S_i	w_p	w_w	I	z_e	R_g	z_p
Nom dia	Schedule	Outside dia	Wall thick	Inside dia	Inside area	Metal area	Outside surf	Inside surf	Pipe wt.	Water wt.	Mom of inert	Elast sec mod	Rad of gyr	Plast sec mod
mm		mm	mm	mm	cm^2	cm^2	m^2/m	m^2/m	kg/m	kg/m	cm^4	cm^3	cm	cm^3
	160	48.26	7.137	33.986	9.072	9.220	0.1516	0.1068	7.219	0.907	20.078	8.321	1.476	12.191
	XXS	48.26	10.16	27.94	6.131	12.161	0.1516	0.0878	9.521	0.613	23.635	9.795	1.394	15.098
	—	48.26	13.335	21.59	3.661	14.631	0.1516	0.0678	11.455	0.366	25.560	10.593	1.322	17.056
	—	48.26	15.875	16.51	2.141	16.151	0.1516	0.0519	12.645	0.214	26.262	10.884	1.275	17.983
50	5S	60.325	1.651	57.023	25.538	3.043	0.1895	0.1791	2.383	2.554	13.106	4.345	2.075	5.685
	10S	60.325	2.769	54.787	23.575	5.007	0.1895	0.1721	3.920	2.357	20.780	6.890	2.037	9.180
	Std 40	60.325	3.912	52.501	21.648	6.933	0.1895	0.1649	5.428	2.165	27.713	9.188	1.999	12.470
	XS 80	60.325	5.537	49.251	19.051	9.530	0.1895	0.1547	7.461	1.905	36.124	11.977	1.947	16.677
	160	60.325	8.712	42.901	14.455	14.126	0.1895	0.1348	11.059	1.446	48.379	16.039	1.851	23.429
	XXS	60.325	11.074	38.177	11.447	17.134	0.1895	0.1199	13.415	1.145	54.579	18.095	1.785	27.315
	—	60.325	14.275	31.775	7.930	20.652	0.1895	0.0998	16.168	0.793	60.002	19.893	1.705	31.242
	—	60.325	17.45	25.425	5.077	23.504	0.1895	0.0799	18.402	0.508	62.955	20.872	1.637	33.850
65	5S	73.025	2.108	68.809	37.186	4.696	0.2294	0.2162	3.677	3.719	29.550	8.093	2.508	10.605
	10S	73.025	3.048	66.929	35.182	6.701	0.2294	0.2103	5.246	3.518	41.092	11.254	2.476	14.935
	Std 40	73.025	5.156	62.713	30.889	10.993	0.2294	0.1970	8.607	3.089	63.662	17.436	2.406	23.796
	XS 80	73.025	7.01	59.005	27.344	14.538	0.2294	0.1854	11.382	2.734	80.089	21.935	2.347	30.665
	160	73.025	9.525	53.975	22.881	19.002	0.2294	0.1696	14.876	2.288	97.928	26.820	2.270	38.696
	XXS	73.025	14.021	44.983	15.892	25.990	0.2294	0.1413	20.348	1.589	119.49	32.726	2.144	49.734
	—	73.025	17.145	38.735	11.784	30.098	0.2294	0.1217	23.564	1.178	128.54	35.204	2.067	55.218
	—	73.025	20.32	32.385	8.237	33.645	0.2294	0.1017	26.341	0.824	134.19	36.752	1.997	59.243
80	5S	88.9	2.108	84.684	56.324	5.748	0.2793	0.2660	4.500	5.632	54.15	12.183	3.069	15.883
	10S	88.9	3.048	82.804	53.851	8.221	0.2793	0.2601	6.436	5.385	75.84	17.061	3.037	22.475
	Std 40	88.9	5.486	77.928	47.696	14.376	0.2793	0.2448	11.255	4.770	125.58	28.251	2.956	38.227
	XS 80	88.9	7.62	73.66	42.614	19.458	0.2793	0.2314	15.233	4.261	162.09	36.466	2.886	50.490
	160	88.9	11.1	66.7	34.942	27.130	0.2793	0.2095	21.240	3.494	209.44	47.119	2.779	67.644
	XXS	88.9	15.24	58.42	26.805	35.267	0.2793	0.1835	27.610	2.680	249.43	56.114	2.659	83.871
	—	88.9	18.415	52.07	21.294	40.777	0.2793	0.1636	31.925	2.129	270.52	60.859	2.576	93.572
	—	88.9	21.59	45.72	16.417	45.654	0.2793	0.1436	35.743	1.642	285.15	64.151	2.499	101.173
90	5S	101.6	2.108	97.384	74.485	6.589	0.3192	0.3059	5.158	7.448	81.56	16.055	3.518	20.870
	10S	101.6	3.048	95.504	71.636	9.437	0.3192	0.3000	7.388	7.164	114.68	22.575	3.486	29.614
	Std 40	101.6	5.74	90.12	63.787	17.286	0.3192	0.2831	13.533	6.379	199.27	39.226	3.395	52.810
	XS 80	101.6	8.077	85.446	57.342	23.731	0.3192	0.2684	18.579	5.734	261.39	51.455	3.319	70.823
	XXS	101.6	16.154	69.292	37.710	43.363	0.3192	0.2177	33.949	3.771	409.89	80.686	3.074	119.348
100	5S	114.3	2.108	110.084	95.179	7.430	0.3591	0.3458	5.817	9.518	116.94	20.462	3.967	26.537
	10S	114.3	3.048	108.204	91.955	10.653	0.3591	0.3399	8.340	9.196	164.94	28.861	3.935	37.735
	—	114.3	4.775	104.75	86.179	16.430	0.3591	0.3291	12.863	8.618	246.83	43.189	3.876	57.317

TABLE E2.1M Principal Properties of Commercial Pipe (Metric Data) (*Continued*)

d_n		D	t	d	A_i	A_m	S_o	S_i	w_p	w_w	I	z_e	R_g	z_p
Nom dia	Schedule	Outside dia	Wall thick	Inside dia	Inside area	Metal area	Outside surf	Inside surf	Pipe wt.	Water wt.	Mom of inert	Elast sec mod	Rad of gyr	Plast sec mod
mm		mm	mm	mm	cm^2	cm^2	m^2/m	m^2/m	kg/m	kg/m	cm^4	cm^3	cm	cm^3
	Std 40	114.3	6.02	102.26	82.130	20.478	0.3591	0.3213	16.033	8.213	301.05	52.677	3.834	70.656
	XS 80	114.3	8.56	97.18	74.173	28.436	0.3591	0.3053	22.262	7.417	400.02	69.995	3.751	95.920
	120	114.3	11.1	92.1	66.621	35.988	0.3591	0.2893	28.175	6.662	484.63	84.800	3.670	118.676
	—	114.3	12.7	88.9	62.072	40.537	0.3591	0.2793	31.736	6.207	531.22	92.952	3.620	131.782
	160	114.3	13.487	87.326	59.893	42.715	0.3591	0.2743	33.442	5.989	552.36	96.652	3.596	137.892
	XXS	114.3	17.12	80.06	50.341	52.267	0.3591	0.2515	40.920	5.034	636.16	111.314	3.489	163.356
	—	114.3	20.32	73.66	42.614	59.994	0.3591	0.2314	46.970	4.261	693.31	121.315	3.399	182.271
	—	114.3	23.495	67.31	35.584	67.025	0.3591	0.2115	52.474	3.558	737.06	128.970	3.316	198.056
125	5S	141.3	2.769	135.762	144.760	12.051	0.4439	0.4265	9.435	14.476	289.20	40.934	4.899	53.148
	10S	141.3	3.404	134.492	142.064	14.747	0.4439	0.4225	11.545	14.206	350.72	49.642	4.877	64.743
	Std 40	141.3	6.553	128.194	129.070	27.740	0.4439	0.4027	21.718	12.907	631.07	89.324	4.770	119.077
	XS 80	141.3	9.525	122.25	117.379	39.432	0.4439	0.3841	30.871	11.738	860.37	121.779	4.671	165.690
	120	141.3	12.7	115.9	105.501	51.309	0.4439	0.3641	40.170	10.550	1071.0	151.595	4.569	210.719
	160	141.3	15.875	109.55	94.257	62.553	0.4439	0.3442	48.973	9.426	1249.8	176.894	4.470	251.075
	XXS	141.3	19.05	103.2	83.647	73.164	0.4439	0.3242	57.280	8.365	1400.0	198.155	4.374	287.014
	—	141.3	22.225	96.85	73.670	83.141	0.4439	0.3043	65.091	7.367	1524.9	215.834	4.283	318.791
	—	141.3	25.4	90.5	64.326	92.484	0.4439	0.2843	72.406	6.433	1627.5	230.357	4.195	346.663
150	5S	168.275	2.769	162.737	208.000	14.398	0.5287	0.5113	11.272	20.800	493.1	58.607	5.852	75.858
	10S	168.275	3.404	161.467	204.766	17.631	0.5287	0.5073	13.804	20.477	599.3	71.232	5.830	92.544
	—	168.275	5.563	157.149	193.961	28.437	0.5287	0.4937	22.263	19.396	942.2	111.980	5.756	147.342
	Std 40	168.275	7.112	154.051	186.389	36.009	0.5287	0.4840	28.191	18.639	1171.4	139.219	5.704	184.847
	XS 80	168.275	10.973	146.329	168.171	54.226	0.5287	0.4597	42.454	16.817	1685.4	200.310	5.575	271.961
	120	168.275	14.275	139.725	153.334	69.063	0.5287	0.4390	54.070	15.333	2065.0	245.426	5.468	339.522
	160	168.275	18.237	131.801	136.436	85.962	0.5287	0.4141	67.300	13.644	2454.6	291.738	5.344	412.570
	XXS	168.275	21.946	124.383	121.510	100.887	0.5287	0.3908	78.985	12.151	2761.0	328.151	5.231	473.444
	—	168.275	25.4	117.475	108.388	114.009	0.5287	0.3691	89.258	10.839	3001.0	356.683	5.131	523.970
	—	168.275	28.575	111.125	96.987	125.410	0.5287	0.3491	98.184	9.699	3187.4	378.829	5.041	565.461
200	5S	219.075	2.769	213.537	358.127	18.817	0.6882	0.6708	14.732	35.813	1100.7	100.483	7.648	129.566
	10S	219.075	3.759	211.557	351.516	25.427	0.6882	0.6646	19.907	35.152	1474.0	134.563	7.614	174.292
	—	219.075	5.563	207.949	339.629	37.315	0.6882	0.6533	29.214	33.963	2127.8	194.251	7.551	253.665
	20	219.075	6.35	206.375	334.507	42.437	0.6882	0.6483	33.224	33.451	2402.6	219.336	7.524	287.441
	30	219.075	7.036	205.003	330.074	46.870	0.6882	0.6440	36.694	33.007	2637.0	240.738	7.501	316.465
	Std 40	219.075	8.179	202.717	322.754	54.190	0.6882	0.6369	42.425	32.275	3017.3	275.456	7.462	363.968
	60	219.075	10.312	198.451	309.313	67.631	0.6882	0.6235	52.949	30.931	3693.3	337.175	7.390	449.792
	XS 80	219.075	12.7	193.675	294.604	82.340	0.6882	0.6084	64.464	29.460	4400.2	401.708	7.310	541.595
	100	219.075	15.062	188.951	280.407	96.536	0.6882	0.5936	75.578	28.041	5049.8	461.010	7.233	628.052
	120	219.075	18.237	182.601	261.877	115.067	0.6882	0.5737	90.086	26.188	5849.4	534.012	7.130	737.642
	140	219.075	20.625	177.825	248.357	128.587	0.6882	0.5587	100.671	24.836	6398.4	584.126	7.054	815.203
	160	219.075	23.012	173.051	235.201	141.743	0.6882	0.5437	110.970	23.520	6904.6	630.343	6.979	888.677
	—	219.075	25.4	168.275	222.398	154.546	0.6882	0.5287	120.994	22.240	7370.8	672.906	6.906	958.236
	—	219.075	28.575	161.925	205.930	171.014	0.6882	0.5087	133.887	20.593	7932.2	724.149	6.811	1044.792

TABLE E2.1M Principal Properties of Commercial Pipe (Metric Data) (*Continued*)

d_n		D	t	d	A_i	A_m	S_o	S_i	w_p	w_w	I	z_e	R_g	z_p
Nom dia	Schedule	Outside dia	Wall thick	Inside dia	Inside area	Metal area	Outside surf	Inside surf	Pipe wt.	Water wt.	Mom of inert	Elast sec mod	Rad of gyr	Plast sec mod
mm		mm	mm	mm	cm^2	cm^2	m^2/m	m^2/m	kg/m	kg/m	cm^4	cm^3	cm	cm^3
250	5S	273.05	3.404	266.242	556.729	28.836	0.8578	0.8364	22.576	55.673	2621.2	191.993	9.534	247.519
	10S	273.05	4.191	264.668	550.166	35.399	0.8578	0.8315	27.714	55.017	3199.3	234.337	9.507	302.978
	—	273.05	5.563	261.924	538.817	46.748	0.8578	0.8229	36.599	53.882	4182.7	306.372	9.459	398.094
	20	273.05	6.35	260.35	532.361	53.204	0.8578	0.8179	41.654	53.236	4733.1	346.684	9.432	451.763
	30	273.05	7.798	257.454	520.583	64.982	0.8578	0.8088	50.874	52.058	5719.9	418.966	9.382	548.826
	Std 40	273.05	9.271	254.508	508.738	76.828	0.8578	0.7996	60.148	50.874	6690.2	490.036	9.332	645.349
	XS 60	273.05	12.7	247.65	481.690	103.875	0.8578	0.7780	81.324	48.169	8822.0	646.179	9.216	861.533
	80	273.05	15.062	242.926	463.488	122.077	0.8578	0.7632	95.574	46.349	10191.0	746.454	9.137	1003.653
	100	273.05	18.237	236.576	439.574	145.991	0.8578	0.7432	114.296	43.957	11909.5	872.331	9.032	1186.168
	120	273.05	21.412	230.226	416.294	169.272	0.8578	0.7233	132.523	41.629	13495.1	988.470	8.929	1359.143
	—	273.05	22.225	228.6	410.434	175.131	0.8578	0.7182	137.110	41.043	13880.6	1016.705	8.903	1401.933
	140	273.05	25.4	222.25	387.949	197.616	0.8578	0.6982	154.714	38.795	15309.1	1121.341	8.802	1563.289
	160	273.05	28.575	215.9	366.097	219.468	0.8578	0.6783	171.822	36.610	16620.3	1217.382	8.702	1715.683
	—	273.05	31.75	209.55	344.879	240.687	0.8578	0.6583	188.434	34.488	17820.8	1305.313	8.605	1859.372
	—	273.05	38.1	196.85	304.342	281.223	0.8578	0.6184	220.170	30.434	19915.0	1458.708	8.415	2121.655
300	5S	323.85	3.962	315.926	783.902	39.817	1.0174	0.9925	31.172	78.390	5093.7	314.570	11.311	405.454
	10S	323.85	4.572	314.706	777.859	45.859	1.0174	0.9887	35.903	77.786	5844.7	360.948	11.289	466.104
	20	323.85	6.35	311.15	760.380	63.339	1.0174	0.9775	49.588	76.038	7984.3	493.084	11.228	640.218
	30	323.85	8.382	307.086	740.646	83.072	1.0174	0.9647	65.037	74.065	10341.3	638.650	11.157	834.390
	Std	323.85	9.525	304.8	729.660	94.058	1.0174	0.9576	73.638	72.966	11626.7	718.031	11.118	941.379
	40	323.85	10.312	303.226	722.144	101.574	1.0174	0.9526	79.523	72.214	12495.1	771.659	11.091	1014.118
	XS	323.85	12.7	298.45	699.575	124.144	1.0174	0.9376	97.192	69.957	15048.5	929.349	11.010	1230.249
	60	323.85	14.275	295.3	684.885	138.833	1.0174	0.9277	108.692	68.489	16666.8	1029.292	10.957	1369.066
	80	323.85	17.45	288.95	655.747	167.971	1.0174	0.9078	131.505	65.575	19775.4	1221.267	10.850	1640.027
	—	323.85	19.05	285.75	641.303	182.415	1.0174	0.8977	142.813	64.130	21266.2	1313.335	10.797	1772.143
	100	323.85	21.412	281.026	620.274	203.444	1.0174	0.8829	159.276	62.027	23377.3	1443.711	10.720	1961.840
	—	323.85	22.225	279.4	613.117	210.601	1.0174	0.8778	164.879	61.312	24079.7	1487.092	10.693	2025.678
	120	323.85	25.4	273.05	585.565	238.153	1.0174	0.8578	186.450	58.557	26707.9	1649.398	10.590	2267.947
	140	323.85	28.575	266.7	558.646	265.072	1.0174	0.8379	207.525	55.865	29158.9	1800.766	10.488	2499.205
	—	323.85	31.75	260.35	532.361	291.357	1.0174	0.8179	228.104	53.236	31441.0	1941.699	10.388	2719.710
	160	323.85	33.325	257.2	519.557	304.162	1.0174	0.8080	238.128	51.956	32512.8	2007.891	10.339	2825.182
350	5S	355.6	3.962	347.676	949.381	43.768	1.1172	1.0923	34.266	94.938	6765.7	380.524	12.433	489.929
	10S	355.6	4.775	346.05	940.521	52.628	1.1172	1.0872	41.202	94.052	8098.1	455.460	12.405	587.746
	—	355.6	5.334	344.932	934.454	58.695	1.1172	1.0836	45.952	93.445	9003.4	506.375	12.385	654.472
	—	355.6	5.563	344.474	931.974	61.175	1.1172	1.0822	47.894	93.197	9371.7	527.091	12.377	681.683
	10	355.6	6.35	342.9	923.477	69.672	1.1172	1.0773	54.547	92.348	10626.3	597.656	12.350	774.646

TABLE E2.1M Principal Properties of Commercial Pipe (Metric Data) (*Continued*)

d_n		D	t	d	A_i	A_m	S_o	S_i	w_p	w_w	I	z_e	R_g	z_p
Nom dia	Schedule	Outside dia	Wall thick	Inside dia	Inside area	Metal area	Outside surf	Inside surf	Pipe wt.	Water wt.	Mom of inert	Elast sec mod	Rad of gyr	Plast sec mod
mm		mm	mm	mm	cm^2	cm^2	m^2/m	m^2/m	kg/m	kg/m	cm^4	cm^3	cm	cm^3
	—	355.6	7.137	341.326	915.018	78.131	1.1172	1.0723	61.169	91.502	11863.8	667.256	12.323	866.759
	20	355.6	7.925	339.75	906.588	86.561	1.1172	1.0674	67.769	90.659	13085.8	735.987	12.295	958.142
	—	355.6	8.738	338.124	897.931	95.218	1.1172	1.0623	74.546	89.793	14328.9	805.902	12.267	1051.541
	Std 30	355.6	9.525	336.55	889.590	103.559	1.1172	1.0573	81.076	88.959	15515.3	872.628	12.240	1141.100
	40	355.6	11.1	333.4	873.016	120.133	1.1172	1.0474	94.052	87.302	17840.1	1003.381	12.186	1317.833
	—	355.6	11.913	331.774	864.521	128.628	1.1172	1.0423	100.703	86.452	19014.7	1069.441	12.158	1407.764
	XS	355.6	12.7	330.2	856.338	136.811	1.1172	1.0374	107.110	85.634	20135.3	1132.469	12.132	1493.984
	60	355.6	15.062	325.476	832.011	161.138	1.1172	1.0225	126.155	83.201	23403.7	1316.294	12.052	1747.856
	—	355.6	15.875	323.85	823.718	169.431	1.1172	1.0174	132.647	82.372	24496.3	1377.743	12.024	1833.553
	80	355.6	19.05	317.5	791.732	201.417	1.1172	0.9975	157.689	79.173	28608.1	1609.006	11.918	2160.063
	100	355.6	23.8	308	745.062	248.087	1.1172	0.9676	194.228	74.506	34315.6	1930.010	11.761	2624.718
	120	355.6	27.762	300.076	707.218	285.931	1.1172	0.9427	223.855	70.722	38689.1	2175.988	11.632	2990.990
	140	355.6	31.75	292.1	670.122	323.027	1.1172	0.9177	252.898	67.012	42754.9	2404.665	11.505	3340.638
	160	355.6	35.712	284.176	634.258	358.891	1.1172	0.8928	280.976	63.426	46477.6	2614.039	11.380	3669.605
400	5S	406.4	4.191	398.018	1244.218	52.957	1.2767	1.2504	41.460	124.422	10709.7	527.051	14.221	678.025
	10S	406.4	4.775	396.85	1236.926	60.248	1.2767	1.2467	47.168	123.693	12149.4	597.902	14.201	770.272
	10	406.4	6.35	393.7	1217.368	79.807	1.2767	1.2368	62.481	121.737	15969.2	785.885	14.146	1016.360
	20	406.4	7.925	390.55	1197.965	99.209	1.2767	1.2270	77.671	119.797	19698.4	969.409	14.091	1258.541
	Std 30	406.4	9.525	387.35	1178.414	118.760	1.2767	1.2169	92.977	117.841	23395.5	1151.355	14.036	1500.599
	XS 40	406.4	12.7	381	1140.094	157.080	1.2767	1.1969	122.978	114.009	30465.5	1499.286	13.927	1969.218
	60	406.4	16.662	373.076	1093.165	204.010	1.2767	1.1721	159.719	109.316	38805.6	1909.727	13.792	2532.479
	80	406.4	21.4412	363.5176	1037.867	259.307	1.2767	1.1420	203.012	103.787	48183.0	2371.209	13.631	3180.791
	100	406.4	26.187	354.026	984.376	312.798	1.2767	1.1122	244.889	98.438	56790.9	2794.826	13.474	3791.705
	120	406.4	30.937	344.526	932.255	364.919	1.2767	1.0824	285.695	93.226	64740.3	3186.038	13.320	4371.222
	140	406.4	36.5	333.4	873.016	424.158	1.2767	1.0474	332.074	87.302	73250.5	3604.847	13.141	5010.459
	160	406.4	40.462	325.476	832.011	465.164	1.2767	1.0225	364.177	83.201	78814.1	3878.645	13.017	5440.481
450	5S	457.2	4.191	448.818	1582.091	59.645	1.4363	1.4100	46.696	158.209	15301.4	669.354	16.017	860.107
	10S	457.2	4.775	447.65	1573.867	67.869	1.4363	1.4063	53.135	157.387	17366.7	759.699	15.997	977.443
	10	457.2	6.35	444.5	1551.795	89.941	1.4363	1.3964	70.415	155.180	22856.6	999.853	15.942	1290.849
	20	457.2	7.925	441.35	1529.879	111.857	1.4363	1.3865	87.573	152.988	28231.1	1234.956	15.887	1599.844
	Std	457.2	9.525	438.15	1507.775	133.961	1.4363	1.3765	104.878	150.777	33574.3	1468.691	15.831	1909.259
	30	457.2	11.1	435	1486.173	155.563	1.4363	1.3666	121.790	148.617	38720.9	1693.826	15.777	2209.458
	XS	457.2	12.7	431.8	1464.388	177.348	1.4363	1.3565	138.846	146.439	43835.9	1917.581	15.722	2510.002
	40	457.2	14.275	428.65	1443.100	198.636	1.4363	1.3466	155.512	144.310	48761.2	2133.034	15.668	2801.532
	60	457.2	19.05	419.1	1379.514	262.222	1.4363	1.3166	205.294	137.951	63043.5	2757.807	15.506	3659.509
	80	457.2	23.8	409.6	1317.683	324.054	1.4363	1.2868	253.702	131.768	76314.6	3338.348	15.346	4475.070
	100	457.2	29.362	398.476	1247.083	394.653	1.4363	1.2519	308.974	124.708	90723.7	3968.667	15.162	5383.123
	120	457.2	34.925	387.35	1178.414	463.322	1.4363	1.2169	362.735	117.841	103977.6	4548.450	14.981	6242.017
	140	457.2	39.675	377.85	1121.320	520.416	1.4363	1.1871	407.434	112.132	114426.0	5005.513	14.828	6937.385
	160	457.2	45.237	366.726	1056.268	585.468	1.4363	1.1521	458.363	105.627	125698.5	5498.624	14.653	7708.342

TABLE E2.1M Principal Properties of Commercial Pipe (Metric Data) (*Continued*)

500	5S	508	4.775	498.45	1951.345	75.489	1.5959	1.5659	59.101	195.135	23897.7	940.853	17.792	1209.260
	10S	508	5.537	496.926	1939.431	87.404	1.5959	1.5611	68.428	193.943	27586.5	1086.081	17.766	1398.006
	10	508	6.35	495.3	1926.760	100.075	1.5959	1.5560	78.349	192.676	31484.9	1239.563	17.737	1598.112
	Std 20	508	9.525	488.95	1877.672	149.162	1.5959	1.5361	116.779	187.767	46345.8	1824.637	17.627	2367.082
	XS 30	508	12.7	482.6	1829.218	197.616	1.5959	1.5161	154.714	182.922	60638.8	2387.354	17.517	3116.336
	40	508	15.062	477.876	1793.582	233.252	1.5959	1.5013	182.613	179.358	70912.3	2791.821	17.436	3661.096
	60	508	20.625	466.75	1711.038	315.797	1.5959	1.4663	247.238	171.104	93932.8	3698.142	17.247	4902.169
	—	508	22.225	463.55	1687.657	339.178	1.5959	1.4563	265.543	168.766	100256.3	3947.100	17.193	5248.361
	80	508	26.187	455.626	1630.452	396.383	1.5959	1.4314	310.329	163.045	115360.9	4541.769	17.060	6085.257
	100	508	32.537	442.926	1540.825	486.010	1.5959	1.3915	380.497	154.082	137979.1	5432.247	16.849	7367.108
	120	508	38.1	431.8	1464.388	562.447	1.5959	1.3565	440.340	146.439	156258.5	6151.908	16.668	8431.313
	140	508	44.45	419.1	1379.514	647.320	1.5959	1.3166	506.787	137.951	175466.0	6908.112	16.464	9580.820
	160	508	49.987	408.026	1307.575	719.260	1.5959	1.2819	563.109	130.757	190848.8	7513.732	16.289	10527.913
550	5S	558.8	4.775	549.25	2369.360	83.110	1.7555	1.7255	65.067	236.936	31889.7	1141.363	19.588	1465.722
	10S	558.8	5.537	547.726	2356.230	96.240	1.7555	1.7207	75.347	235.623	36827.3	1318.084	19.562	1694.966
	10	558.8	6.35	546.1	2342.261	110.209	1.7555	1.7156	86.283	234.226	42050.0	1505.013	19.533	1938.150
	Std 20	558.8	9.525	539.75	2288.106	164.364	1.7555	1.6957	128.680	228.811	62004.3	2219.193	19.423	2874.067
	XS 30	558.8	12.7	533.4	2234.585	217.885	1.7555	1.6757	170.582	223.459	81266.5	2908.608	19.313	3788.219
	—	558.8	15.875	527.05	2181.697	270.772	1.7555	1.6558	211.988	218.170	99852.9	3573.835	19.204	4680.862
	—	558.8	19.05	520.7	2129.443	323.027	1.7555	1.6358	252.898	212.944	117779.6	4215.447	19.095	5552.253
	60	558.8	22.225	514.35	2077.822	374.648	1.7555	1.6159	293.312	207.782	135062.3	4834.011	18.987	6402.648
	80	558.8	28.575	501.65	1976.480	475.989	1.7555	1.5760	372.652	197.648	167757.8	6004.218	18.773	8041.472
	100	558.8	34.925	488.95	1877.672	574.798	1.7555	1.5361	450.009	187.767	198062.3	7088.844	18.563	9599.384
	120	558.8	41.275	476.25	1781.398	671.072	1.7555	1.4962	525.383	178.140	226095.2	8092.168	18.355	11078.432
	140	558.8	47.625	463.55	1687.657	764.813	1.7555	1.4563	598.773	168.766	251972.9	9018.356	18.151	12480.663
	160	558.8	53.975	450.85	1596.449	856.021	1.7555	1.4164	670.179	159.645	275808.8	9871.469	17.950	13808.127
600	10	609.6	6.35	596.9	2798.299	120.343	1.9151	1.8752	94.217	279.830	54748.3	1796.203	21.329	2310.964
	Std 20	609.6	9.525	590.55	2739.077	179.565	1.9151	1.8553	140.581	273.908	80843.9	2652.360	21.219	3430.214
	XS	609.6	12.7	584.2	2680.489	238.153	1.9151	1.8353	186.450	268.049	106111.3	3481.341	21.108	4525.651
	30	609.6	14.275	581.05	2651.660	266.981	1.9151	1.8254	209.020	265.166	118343.5	3882.662	21.054	5060.300
	—	609.6	15.875	577.85	2622.534	296.108	1.9151	1.8154	231.823	262.253	130568.0	4283.725	20.999	5597.532
	40	609.6	17.45	574.7	2594.020	324.622	1.9151	1.8055	254.147	259.402	142404.6	4672.068	20.945	6120.590
	—	609.6	19.05	571.5	2565.213	353.429	1.9151	1.7954	276.700	256.521	154231.5	5060.090	20.890	6646.112
	5S	609.6	5.537	598.526	2813.565	105.077	1.9151	1.8803	82.265	281.356	47930.7	1572.531	21.358	2020.505
	—	609.6	22.225	565.15	2508.525	410.117	1.9151	1.7755	321.081	250.852	177119.3	5811.002	20.782	7671.646
	60	609.6	24.587	560.426	2466.763	451.879	1.9151	1.7606	353.776	246.676	193653.4	6353.456	20.702	8419.783
	80	609.6	30.937	547.726	2356.230	562.412	1.9151	1.7207	440.313	235.623	236075.8	7745.267	20.488	10369.359
	100	609.6	38.887	531.826	2221.417	697.225	1.9151	1.6708	545.858	222.142	285184.5	9356.446	20.225	12685.870
	120	609.6	46.025	517.55	2103.757	814.885	1.9151	1.6259	637.974	210.376	325680.9	10685.069	19.992	14651.104

TABLE E2.1M Principal Properties of Commercial Pipe (Metric Data) (*Continued*)

d_n Nom dia mm	Schedule	D Outside dia mm	t Wall thick mm	d Inside dia mm	A_i Inside area cm^2	A_m Metal area cm^2	S_o Outside surf m^2/m	S_i Inside surf m^2/m	w_p Pipe wt. kg/m	w_w Water wt. kg/m	I Mom of inert cm^4	z_e Elast sec mod cm^3	R_g Rad of gyr cm	z_p Plast sec mod cm^3
	140	609.6	52.375	504.85	2001.777	916.865	1.9151	1.5860	717.814	200.178	358998.2	11778.156	19.788	16310.639
	160	609.6	59.512	490.576	1890.181	1028.460	1.9151	1.5412	805.182	189.018	393560.2	12912.079	19.562	18078.760
650	—	660.4	6.35	647.7	3294.873	130.477	2.0747	2.0348	102.151	329.487	69775.7	2113.133	23.125	2716.552
	10	660.4	7.925	644.55	3262.903	162.448	2.0747	2.0249	127.181	326.290	86459.2	2618.390	23.070	3374.093
	Std	660.4	9.525	641.35	3230.584	194.766	2.0747	2.0149	152.482	323.058	103159.0	3124.138	23.014	4035.523
	XS 20	660.4	12.7	635	3166.929	258.421	2.0747	1.9949	202.318	316.693	135565.4	4105.554	22.904	5328.634
	—	660.4	15.875	628.65	3103.907	321.443	2.0747	1.9750	251.658	310.391	167014.0	5057.965	22.794	6596.139
	—	660.4	19.05	622.3	3041.519	383.832	2.0747	1.9550	300.502	304.152	197523.9	5981.949	22.685	7838.294
	—	660.4	22.225	615.95	2979.764	445.587	2.0747	1.9351	348.850	297.976	227114.1	6878.076	22.577	9055.357
	—	660.4	25.4	609.6	2918.642	506.709	2.0747	1.9151	396.702	291.864	255803.0	7746.912	22.469	10247.582
	—	660.4	28.575	603.25	2858.154	567.197	2.0747	1.8952	444.059	285.815	283609.3	8589.017	22.361	11415.227
700	—	711.2	6.35	698.5	3831.984	140.612	2.2343	2.1944	110.085	383.198	87328.4	2455.805	24.921	3154.914
	10	711.2	7.925	695.35	3797.500	175.096	2.2343	2.1845	137.082	379.750	108264.6	3044.561	24.866	3919.915
	Std	711.2	9.525	692.15	3762.629	209.967	2.2343	2.1745	164.384	376.263	129243.7	3634.526	24.810	4689.995
	XS 20	711.2	12.7	685.8	3693.906	278.690	2.2343	2.1545	218.186	369.391	170021.2	4781.247	24.700	6197.165
	30	711.2	15.875	679.45	3625.817	346.779	2.2343	2.1346	271.493	362.582	209681.5	5896.554	24.590	7676.682
	—	711.2	19.05	673.1	3558.362	414.234	2.2343	2.1146	324.304	355.836	248245.3	6981.026	24.480	9128.801
	—	711.2	22.225	666.75	3491.539	481.057	2.2343	2.0947	376.619	349.154	285732.9	8035.235	24.372	10553.779
	—	711.2	25.4	660.4	3425.351	547.245	2.2343	2.0747	428.439	342.535	322164.7	9059.750	24.263	11951.871
		711.2	28.575	654.05	3359.795	612.801	2.2343	2.0548	479.762	335.980	357560.6	10055.134	24.156	13323.334
750	5S	762	6.35	749.3	4409.632	150.746	2.3939	2.3540	118.019	440.963	107602.6	2824.216	26.717	3626.052
	10	762	7.925	746.15	4372.635	187.743	2.3939	2.3441	146.984	437.263	133458.8	3502.857	26.662	4506.642
	Std	762	9.525	742.95	4335.209	225.169	2.3939	2.3341	176.285	433.521	159392.3	4183.524	26.606	5393.628
	XS 20	762	12.7	736.6	4261.420	298.958	2.3939	2.3141	234.054	426.142	209870.9	5508.421	26.496	7131.247
	30	762	15.875	730.25	4188.264	372.114	2.3939	2.2942	291.328	418.826	259060.7	6799.494	26.385	8839.163
	40	762	19.05	723.9	4115.741	444.637	2.3939	2.2742	348.106	411.574	306983.9	8057.321	26.276	10517.633
	—	762	22.225	717.55	4043.852	516.526	2.3939	2.2543	404.389	404.385	353662.5	9282.480	26.167	12166.913
	—	762	25.4	711.2	3972.596	587.782	2.3939	2.2343	460.175	397.260	399118.1	10475.541	26.058	13787.259
	—	762	28.575	704.85	3901.973	658.405	2.3939	2.2144	515.465	390.197	443372.3	11637.069	25.950	15378.927
800	—	812.8	6.35	800.1	5027.817	160.880	2.5535	2.5136	125.953	502.782	130794.5	3218.368	28.513	4129.964
	10	812.8	7.925	796.95	4988.306	200.391	2.5535	2.5037	156.886	498.831	162286.8	3993.277	28.458	5134.272
	Std	812.8	9.525	793.75	4948.327	240.370	2.5535	2.4936	188.186	494.833	193898.9	4771.134	28.402	6146.424
	XS 20	812.8	12.7	787.4	4869.470	319.226	2.5535	2.4737	249.923	486.947	255506.8	6287.076	28.291	8130.878
	30	812.8	15.875	781.05	4791.247	397.450	2.5535	2.4537	311.163	479.125	315642.1	7766.783	28.181	10083.580
	40	812.8	17.475	777.85	4752.068	436.629	2.5535	2.4437	341.837	475.207	345395.9	8498.915	28.126	11055.669
	—	812.8	19.05	774.7	4713.657	475.039	2.5535	2.4338	371.909	471.366	374328.4	9210.836	28.071	12004.789
	—	812.8	22.225	768.35	4636.701	551.996	2.5535	2.4138	432.158	463.670	431589.2	10619.813	27.962	13894.759
	—	812.8	25.4	762	4560.378	628.319	2.5535	2.3939	491.911	456.038	487447.8	11994.286	27.853	15753.746
	—	812.8	28.575	755.65	4484.688	704.008	2.5535	2.3740	551.168	448.469	541927.2	13334.824	27.745	17582.007
850	—	863.6	6.35	850.9	5686.538	171.014	2.7131	2.6732	133.887	568.654	157100.1	3638.261	30.309	4666.651
	10	863.6	7.925	847.75	5644.513	213.039	2.7131	2.6633	166.788	564.451	194993.2	4515.823	30.254	5802.806

TABLE E2.1M Principal Properties of Commercial Pipe (Metric Data) (*Continued*)

d_n			D	t	d	A_i	A_m	S_o	S_i	w_p	w_w	I	z_e	R_g	z_p
Nom dia	Schedule		Outside dia	Wall thick	Inside dia	Inside area	Metal area	Outside surf	Inside surf	Pipe wt.	Water wt.	Mom of inert	Elast sec mod	Rad of gyr	Plast sec mod
mm			mm	mm	mm	cm^2	cm^2	m^2/m	m^2/m	kg/m	kg/m	cm^4	cm^3	cm	cm^3
	Std		863.6	9.525	844.55	5601.981	255.571	2.7131	2.6532	200.087	560.198	233057.7	5397.354	30.198	6948.382
	XS	20	863.6	12.7	838.2	5518.057	339.495	2.7131	2.6333	265.791	551.806	307321.2	7117.211	30.087	9196.058
		30	863.6	15.875	831.85	5434.767	422.785	2.7131	2.6133	330.999	543.477	379915.9	8798.423	29.977	11409.935
		40	863.6	17.475	828.65	5393.034	464.518	2.7131	2.6033	363.671	539.303	415874.7	9631.187	29.921	12512.862
	—		863.6	19.05	825.5	5352.110	505.442	2.7131	2.5934	395.711	535.211	450867.0	10441.571	29.867	13590.269
	—		863.6	22.225	819.15	5270.087	587.465	2.7131	2.5734	459.927	527.009	520199.6	12047.234	29.757	15737.316
	—		863.6	25.4	812.8	5188.697	668.855	2.7131	2.5535	523.647	518.870	587938.3	13615.987	29.648	17851.332
	—		863.6	28.575	806.45	5107.940	749.612	2.7131	2.5335	586.872	510.794	654108.0	15148.401	29.540	19932.573
900	—		914.4	6.35	901.7	6385.796	181.148	2.8727	2.8328	141.821	638.580	186715.7	4083.894	32.105	5236.113
		10	914.4	7.925	898.55	6341.258	225.687	2.8727	2.8229	176.690	634.126	231823.0	5070.493	32.050	6512.244
	Std		914.4	9.525	895.35	6296.172	270.772	2.8727	2.8128	211.988	629.617	277163.1	6062.184	31.994	7799.502
	XS	20	914.4	12.7	889	6207.181	359.763	2.8727	2.7929	281.659	620.718	365706.4	7998.827	31.883	10326.788
		30	914.4	15.875	882.65	6118.824	448.120	2.8727	2.7729	350.834	611.882	452372.6	9894.413	31.773	12818.226
		40	914.4	19.05	876.3	6031.100	535.844	2.8727	2.7530	419.513	603.110	537188.3	11749.525	31.663	15274.073
	—		914.4	22.225	869.95	5944.009	622.935	2.8727	2.7330	487.696	594.401	620180.1	13564.744	31.553	17694.585
	—		914.4	25.4	863.6	5857.552	709.392	2.8727	2.7131	555.383	585.755	701374.3	15340.646	31.444	20080.017
	—		914.4	28.575	857.25	5771.728	795.216	2.8727	2.6931	622.575	577.173	780797.1	17077.802	31.335	22430.627
1050	—		1066.8	6.35	1054.1	8726.790	211.551	3.3515	3.3116	165.623	872.679	297383.2	5575.237	37.493	7141.147
	Std		1066.8	9.525	1047.75	8621.965	316.376	3.3515	3.2916	247.691	862.196	442100.1	8288.341	37.382	10647.836
	XS	20	1066.8	12.7	1041.4	8517.773	420.568	3.3515	3.2717	329.263	851.777	584209.6	10952.561	37.271	14112.276
		30	1066.8	15.875	1035.05	8414.214	524.127	3.3515	3.2517	410.339	841.421	723743.2	13568.488	37.160	17534.723
		40	1066.8	19.05	1028.7	8311.289	627.052	3.3515	3.2318	490.919	831.129	860732.1	16136.710	37.050	20915.433
	—		1066.8	25.4	1016	8107.339	831.002	3.3515	3.1919	650.592	810.734	1127201	21132.369	36.830	27552.668
	—		1066.8	31.75	1003.3	7905.922	1032.419	3.3515	3.1520	808.281	790.592	1383862	25944.162	36.612	34026.029
	—		1066.8	38.1	990.6	7707.039	1231.302	3.3515	3.1121	963.987	770.704	1630959	30576.656	36.395	40337.565

APPENDIX E3

TUBE PROPERTIES

Ervin L. Geiger
Engineering Supervisor
Bechtel Power Corporation
Frederick, Maryland

TABLE E3.1 Weights of Tubing, Pound per Foot Length

OD, in.	Wall thickness, in.															
	0.050	0.095	0.150	0.200	0.250	0.300	0.360	0.400	0.460	0.500	0.625	0.750	0.875	1.000	1.125	1.250
0.500	0.2403	0.4109	0.5607													
0.750	0.3738	0.6646	0.9612	1.175	1.335											
1.000	0.5073	0.9182	1.362	1.709	2.003	2.243	2.461									
1.250	0.6408	1.172	1.762	2.243	2.670	3.044	3.422	3.631								
1.500	0.7743	1.426	2.163	2.777	3.338	3.845	4.383	4.699	5.109	5.340						
1.750	0.9078	1.679	2.563	3.311	4.005	4.646	5.344	5.767	6.338	6.675	7.509					
2.000	1.041	1.933	2.964	3.845	4.673	5.447	6.305	6.835	7.566	8.010	9.178	10.01				
2.250	1.175	2.186	3.364	4.379	5.340	6.248	7.267	7.903	8.794	9.345	10.85	12.02				
2.500	1.308	2.440	3.765	4.913	6.008	7.049	8.228	8.971	10.02	10.68	12.52	14.02	15.19			
2.750	1.442	2.694	4.165	5.447	6.675	7.850	9.189	10.04	11.25	12.02	14.18	16.02	17.52	18.69		
3.000	1.575	2.947	4.566	5.981	7.343	8.651	10.15	11.11	12.48	13.35	15.85	18.02	19.86	21.36		
3.250	1.709	3.201	4.966	6.515	8.010	9.452	11.11	12.18	13.71	14.69	17.52	20.03	22.19	24.03		
3.500	1.842	3.455	5.367	7.049	8.678	10.25	12.07	13.24	14.93	16.02	19.19	22.03	24.53	26.70		
3.750	1.976	3.708	5.767	7.583	9.345	11.05	13.03	14.31	16.16	17.36	20.86	24.03	26.87	29.37	31.54	
4.000	2.109	3.962	6.168	8.117	10.01	11.85	14.00	15.38	17.39	18.69	22.53	26.03	29.20	32.04	34.54	
4.250	2.243	4.216	6.568	8.651	10.68	12.66	14.96	16.45	18.62	20.03	24.20	28.04	31.54	34.71	37.55	
4.500	2.376	4.469	6.969	9.185	11.35	13.46	15.92	17.52	19.85	21.36	25.87	30.04	33.88	37.38	40.55	
4.750	2.510	4.723	7.369	9.719	12.02	14.26	16.88	18.58	21.08	22.70	27.53	32.04	36.21	40.05	43.55	46.73

TABLE E3.1 Weights of Tubing, Pound per Foot Length *(Continued)*

OD, in.	Wall thickness, in.															
	0.050	0.095	0.150	0.200	0.250	0.300	0.360	0.400	0.460	0.500	0.625	0.750	0.875	1.000	1.125	1.250
5.000	2.643	4.977	7.770	10.25	12.68	15.06	17.84	19.65	22.30	24.03	29.20	34.04	38.55	42.72	46.56	50.06
5.250	....	5.230	8.170	10.79	13.35	15.86	18.80	20.72	23.53	25.37	30.87	36.05	40.88	45.39	49.56	53.40
5.500	....	5.484	8.571	11.32	14.02	16.66	19.76	21.79	24.76	26.70	32.54	38.05	43.22	48.06	52.57	56.74
5.750	....	5.738	8.971	11.85	14.69	17.46	20.72	22.86	25.99	28.04	34.21	40.05	45.56	50.73	55.57	60.08
6.000	....	5.991	9.372	12.39	15.35	18.26	21.68	23.92	27.22	29.37	35.88	42.05	47.89	53.40	58.57	63.41
6.250	....	6.245	9.772	12.92	16.02	19.06	22.65	24.99	28.45	30.71	37.55	44.06	50.23	56.07	61.58	66.75
6.500	....	....	10.17	13.46	16.69	19.86	23.61	26.06	29.67	32.04	39.22	46.06	52.57	58.74	64.58	70.09
6.750	....	....	10.57	13.99	17.36	20.67	24.57	27.13	30.90	33.38	40.88	48.06	54.90	61.41	67.58	73.43
7.000	....	....	10.97	14.52	18.02	21.47	25.53	28.20	32.13	34.71	42.55	50.06	57.24	64.08	70.59	76.76
7.250	....	....	11.37	15.06	18.69	22.27	26.49	29.26	33.36	36.05	44.22	52.07	59.57	66.75	73.59	80.10
7.500	....	....	....	15.59	19.36	23.07	27.45	30.33	34.59	37.38	45.89	54.07	61.91	69.42	76.60	83.44
7.750	....	....	....	16.13	20.03	23.87	28.41	31.40	35.81	38.72	47.56	56.07	64.25	72.09	79.60	86.78
8.000	....	....	....	16.66	20.69	24.67	29.37	32.47	37.04	40.05	49.23	58.07	66.58	74.76	82.60	90.11
8.250	....	....	....	17.19	21.36	25.47	30.34	33.54	38.27	41.39	50.90	60.08	68.92	77.43	85.61	93.45
8.500	....	....	....	17.73	22.03	26.27	31.30	34.60	39.50	42.72	52.57	62.08	71.26	80.10	88.61	96.79
8.750	....	....	....	....	22.70	27.07	32.26	35.67	40.73	44.06	54.23	64.08	73.59	82.77	91.61	100.1
9.000	....	....	....	....	23.36	27.87	33.22	36.74	41.96	45.39	55.90	66.08	75.93	85.44	94.62	103.5
9.250	....	....	....	....	24.03	28.68	34.18	37.81	43.18	46.73	57.57	68.09	78.26	88.11	97.62	106.8
9.500	....	....	....	....	24.70	29.48	35.14	38.88	44.41	48.06	59.24	70.09	80.60	90.78	100.6	110.1
9.750	....	....	....	....	25.37	30.28	36.10	39.94	45.64	49.40	60.91	72.09	82.94	93.45	103.6	113.5
10.000	....	....	....	....	26.03	31.08	37.06	41.01	46.87	50.73	62.58	74.09	85.27	96.12	106.6	116.8

TABLE E3.2 Diameter and Wall-Thickness Tolerances for Seamless Hot-Finished Mechanical Tubing of Carbon and Alloy Steel (AISI)*

Specified size, OD, in.	Ratio of wall thickness to OD	OD tolerance		Wall thickness tolerance, %							
				0.109 in. and under		Over 0.109 to 0.172 in., incl.		Over 0.172 to 0.203 in., incl.		Over 0.203 in.	
		Over	Under	Over	Under	Over	Under	Over	Under	Over	Under
Under 3	All wall thicknesses	0.023	0.023	16.5	16.5	15	15	14	14	12.5	12.5
3–5½, excl.	All wall thicknesses	0.031	0.031	16.5	16.5	15	15	14	14	12.5	12.5
5½–8, excl.	All wall thicknesses	0.047	0.047	. . .	. . .	. .	. .	14	14	12.5	12.5
8–10¾, incl. . . .	5% and over	0.047	0.047	. . .	. . .	. .	. .	. .	. .	12.5	12.5
8–10¾, incl. . . .	Under 5%	0.063	0.063	. . .	. . .	. .	. .	. .	. .	12.5	12.5

* The common range of sizes of hot-finished tubes is 1½ to and including 10¾ in outside diameter with wall thickness not less than 0.095 in (no. 13 BWG) or 3 percent or more of the outside diameter. For sizes under 1½ or over 10¾ in outside diameter, the tolerances are commonly negotiated between the purchaser and producer.

Source: Steel Products Manual.

TABLE E3.3 Diameter and Wall-Thickness Tolerances for Seamless Cold-Worked Mechanical Tubing of Carbon and Alloy Steel (AISI)[1]

Size, OD, in.	Unannealed or finish-annealed				Soft annealed or normalized				Quenched and tempered				Wall thickness all conditions, %	
	OD, in.		ID, in.		OD, in.		ID, in.		OD, in.		ID, in.			
	Over	Under	Over	Under	Over	Under	Over	Under	Over	Under	Over	Under	Over	Under
³⁄₁₆–½, excl.[2,3]	0.004	0	....	....	0.006	0.002	....	....	0.010	0.010	....	....	15	15
½–1½, excl.[2,3,4,5]	0.005	0	0	0.005	0.008	0.002	0.002	0.008	0.015	0.015	0.015	0.015	10	10
1½–3½, excl.[2,3,4,5]	0.010	0	0	0.010	0.015	0.005	0.005	0.015	0.030	0.030	0.030	0.030	10	10
3½–5½, excl.[4,5]	0.015	0	0.005	0.015	0.023	0.007	0.015	0.025	0.045	0.045	0.045	0.045	10	10
5½–8, excl.[5], wall less than 5% OD	0.030	0.030	0.035	0.035	0.060	0.060	0.070	0.070	....	....	....	....	10	10
5½–8, excl., wall from 5 to 7.5% OD	0.020	0.020	0.025	0.025	0.040	0.040	0.050	0.050	....	....	....	....	10	10
5½–8, excl.[4], wall over 7.5% OD	0.030	0	0.015	0.030	0.045	0.015	0.037	0.053	....	....	....	....	10	10
8–10¾, incl.[5], wall less than 5% OD	0.045	0.045	0.050	0.050	....	....	....	....	....	....	....	....	10	10
8–10¾, incl., wall from 5 to 75% OD	0.035	0.035	0.040	0.040	....	....	....	....	....	....	....	....	10	10
8–10¾, incl.[4], wall over 7.5% OD	0.045	0	0.015	0.040	....	....	....	....	....	....	....	....	10	10

[1] For tolerances closer than those indicated, availability and applicable tolerances for tubing less than ³⁄₁₆ in OD or larger than 10¾-in. OD, the producer should be consulted.

[2] For those tubes with inside diameter less than ½ in (or less than ⅝ in when the wall thickness is more than 20 percent of the outside diameter), which are not commonly drawn over a mandrel, note[4] is not applicable. Unless otherwise agreed upon by the purchaser and producer, the wall thickness may vary 15 percent over and under that specified, and the inside diameter is governed by the outside diameter and wall-thickness tolerances shown.

[3] For tubes with inside diameter less than ½ in (or less than ⅝ in when the wall thickness is more than 20 percent of the outside diameter), which can be produced by the rod or bar mandrel process, the tolerances are as shown in the above table except that the wall-thickness tolerances are 10 percent over and under the specified wall thickness.

[4] Many tubes with inside diameter less than 50 percent of outside diameter, with wall thickness more than 25 percent of outside diameter, with wall thickness over 1¼ in or weighing more than 90 lb/ft are difficult to draw over a mandrel. Unless otherwise agreed upon by the purchaser and producer the inside diameter may vary over or under by an amount equal to 10 percent of the wall thickness and the wall thickness may vary 12½ percent over and under that specified.

[5] Tubing have a wall thickness less than 3 percent of the outside diameter cannot be straightened properly without a certain amount of distortion. Consequently, such tubes, while having an average outside diameter and inside diameter within the tolerances shown in the above table, require an ovality tolerance of 0.5 percent over and under nominal outside diameter, this being in addition to the tolerances indicated in the above table.

Source: AISI Steel Products Manual.

APPENDIX E3M

TUBE PROPERTIES (METRIC) FOR COPPER TUBE

(Per ASTM B88)

TABLE E3.1M Dimensions, Mass, and Tolerances in Diameter and Wall Thickness for Metric Copper

	Water tube sizes (all tolerances are plus and minus except as otherwise indicated.)								
	Wall thickness and tolerances, mm						Theoretical mass, kg/m		
	Type A		Type B		Type C				
Nominal or standard size, mm	Wall thickness	Tolerance (b)	Wall thickness	Tolerance (b)	Wall thickness	Tolerance (b)	Type A	Type B	Type C
6	0.8	0.08	0.7	0.07	0.6	c	0.117	0.104	0.091
8	0.9	0.09	0.8	0.08	0.6	c	0.179	0.162	0.125
10	0.9	0.09	0.8	0.08	0.6	c	0.23	0.207	0.158
12	1.2	0.1	0.9	0.09	0.6	0.06	0.364	0.28	0.192
15	1.2	0.1	1	0.1	0.7	0.07	0.465	0.393	0.281
18	1.2	0.1	1	0.1	0.7	0.07	0.566	0.477	0.34
22	1.6	0.15	1.1	0.1	0.8	0.08	0.917	0.646	0.476
28	1.6	0.15	1.2	0.1	0.9	0.09	1.19	0.903	0.685
35	1.6	0.15	1.4	0.15	1.1	0.1	1.5	1.32	1.05
42	1.8	0.2	1.5	0.15	1.2	0.1	2.03	1.71	1.37
54	2.1	0.2	1.7	0.15	1.5	0.15	3.06	2.5	2.21
67	2.4	0.25	2	0.2	1.6	0.15	4.35	3.65	2.94
79	2.8	0.3	2.3	0.25	1.8	0.2	5.99	4.95	3.9
105	3.4	0.35	2.8	0.3	2.4	0.25	9.7	8.04	6.92
130	4	0.4	3.1	0.3	2.7	0.25	14.2	11	9.65
156	4.8	0.5	3.5	0.35	3.1	0.3	20.3	15	13.3
206	6.8	0.7	5	0.5	4.3	0.45	38	28.2	24.4
257	8.5	0.85	6.3	0.65	5.4	0.55	59.3	44.4	38.2
308	10.3	1	7.1	0.7	6.4	0.65	86.1	60	54.2

[b] Maximum deviation at any one point.

[c] Indicates that the material is not generally available or that no tolerance has been established.

APPENDIX E4

FRICTION LOSS FOR WATER IN FEET PER 100 FT OF PIPE

(Excerpted from Hydraulic Institute Engineering Data Handbook with permission.)

TABLE E4.1 Friction Loss for Water in Feet per 100 Ft of Pipe

4 in nominal		Steel-schedule 40 ID = 4.026 in $\varepsilon/D = 0.000447$			Asphalt-dipped cast iron ID = 4.00 in $\varepsilon/D = 0.00120$		
Discharge							
ft^3/s	gal/min	V (ft/s)	$V^2/2g$ (ft)	h_f feet per 100 ft of pipe	V (ft/s)	$V^2/2g$ (ft)	h_f feet per 100 ft of pipe
0.0111	5	0.126	0.000247	0.00310	0.128	0.000253	0.00325
0.0223	10	0.252	0.000987	0.01017	0.255	0.00101	0.01080
0.0446	20	0.504	0.00395	0.0344	0.511	0.00405	0.03700
0.0668	30	0.756	0.00888	0.0702	0.766	0.00912	0.0770
0.0981	40	1.01	0.0158	0.118	1.02	0.0162	0.131
0.111	50	1.26	0.0247	0.176	1.28	0.0253	0.199
0.134	60	1.51	0.0355	0.245	1.53	0.0365	0.278
0.156	70	1.76	0.0484	0.325	1.79	0.0496	0.370
0.178	80	2.02	0.0632	0.415	2.04	0.0648	0.476
0.201	90	2.27	0.0800	0.515	2.30	0.0820	0.594
0.223	100	2.52	0.0987	0.624	2.55	0.101	0.725
0.245	110	2.77	0.119	0.744	2.81	0.123	0.869
0.267	120	3.02	0.142	0.877	3.06	0.146	1.03
0.290	130	3.28	0.167	1.017	3.32	0.171	1.19
0.312	140	3.53	0.193	1.165	3.57	0.199	1.38
0.334	150	3.78	0.222	1.32	3.83	0.228	1.58
0.356	160	4.03	0.253	1.49	4.08	0.259	1.78
0.379	170	4.28	0.285	1.67	4.34	0.293	2.00
0.401	180	4.54	0.320	1.86	4.60	0.328	2.24
0.423	190	4.79	0.356	2.06	4.85	0.366	2.49
0.446	200	5.04	0.395	2.27	5.11	0.406	2.74
0.490	220	5.54	0.478	2.72	5.62	0.490	3.28
0.535	240	6.05	0.569	3.21	6.13	0.583	3.88
0.579	260	6.55	0.667	3.74	6.64	0.685	4.54
0.624	280	7.06	0.774	4.30	7.15	0.794	5.25
0.668	300	7.56	0.888	4.89	7.66	0.912	6.03
0.713	320	8.06	1.01	5.51	8.17	1.04	6.87
0.758	340	8.57	1.14	6.19	8.68	1.17	7.75
0.802	360	9.07	1.28	6.92	9.19	1.31	8.68
0.847	380	9.58	1.43	7.68	9.70	1.46	9.66
0.891	400	10.1	1.58	8.47	10.2	1.62	10.7
0.936	420	10.6	1.74	9.30	10.7	1.79	11.7
0.980	440	11.1	1.91	10.2	11.2	1.96	12.8
1.025	460	11.6	2.09	11.1	11.7	2.14	14.0
1.069	480	12.1	2.27	12.0	12.3	2.33	15.3
1.114	500	12.6	2.47	13.0	12.8	2.53	16.6
1.225	550	13.9	2.99	15.7	14.0	3.06	19.9
1.337	600	15.1	3.55	18.6	15.3	3.65	23.6
1.448	650	16.4	4.17	21.7	16.6	4.28	27.7
1.560	700	17.6	4.84	25.0	17.9	4.96	32.1
1.671	750	18.9	5.55	28.6	19.1	5.70	36.7
1.782	800	20.2	6.32	32.4	20.4	6.48	41.6
1.894	850	21.4	7.13	36.5	21.7	7.32	46.8
2.005	900	22.7	8.00	40.8	23.0	8.20	52.3
2.117	950	23.9	8.91	45.3	24.3	9.14	58.1

TABLE E4.1 Friction Loss for Water in Feet per 100 Ft of Pipe (*Continued*)

4 in nominal		Steel-schedule 40 ID = 4.026 in $\varepsilon/D = 0.000447$			Asphalt-dipped cast iron ID = 4.00 in $\varepsilon/D = 0.00120$		
Discharge							
ft^3/s	gal/min	V (ft/s)	$V^2/2g$ (ft)	h_f feet per 100 ft of pipe	V (ft/s)	$V^2/2g$ (ft)	h_f feet per 100 ft of pipe
2.228	1 000	25.2	9.87	50.2	25.5	10.1	64.2
2.451	1 100	27.7	11.9	60.5	28.1	12.3	78.2
2.674	1 200	30.2	14.2	72.0	30.6	14.6	92.8
2.896	1 300	32.8	16.7	84.3	33.2	17.1	108.2
3.119	1 400	35.3	19.3	97.6	35.7	19.9	126
3.342	1 500	37.8	22.2	112	38.3	22.8	144
3.565	1 600	40.3	25.3	127	40.8	25.9	164
3.788	1 700	42.8	28.5	143	43.4	29.3	185
4.010	1 800	45.4	32.0	160	46.0	32.8	207
4.233	1 900	47.9	35.6	178	48.5	36.6	230
4.456	2 000	50.4	39.5	196	51.1	40.5	255

6 in nominal		Steel-schedule 40 ID = 6.065 in $\varepsilon/D = 0.000293$			Asphalt-dipped cast iron ID = 6.00 in $\varepsilon/D = 0.000800$		
Discharge							
ft^3/s	gal/min	V (ft/s)	$V^2/2g$ (ft)	h_f feet per 100 ft of pipe	V (ft/s)	$V^2/2g$ (ft)	h_f feet per 100 ft of pipe
0.0223	10	0.111	0.000192	0.00146	0.113	0.000200	0.00157
0.0446	20	0.222	0.000767	0.00487	0.227	0.000800	0.00523
0.0668	30	0.333	0.00172	0.00988	0.340	0.00180	0.01070
0.0891	40	0.444	0.00307	0.0164	0.454	0.00320	0.0179
0.111	50	0.555	0.00479	0.0244	0.567	0.00500	0.0268
0.134	60	0.666	0.00690	0.0337	0.681	0.00720	0.0374
0.156	70	0.777	0.00939	0.0445	0.794	0.00980	0.0496
0.178	80	0.888	0.0123	0.0564	0.908	0.0128	0.0635
0.201	90	0.999	0.0155	0.0698	1.02	0.0162	0.0789
0.223	100	1.11	0.0192	0.0843	1.13	0.0200	0.0958
0.267	120	1.33	0.0276	0.118	1.36	0.0288	0.130
0.312	140	1.55	0.0376	0.155	1.59	0.0392	0.178
0.356	160	1.78	0.0491	0.198	1.82	0.0512	0.229
0.401	180	2.00	0.0621	0.246	2.04	0.0648	0.282
0.446	200	2.22	0.0767	0.299	2.27	0.0800	0.346
0.490	220	2.44	0.0927	0.357	2.50	0.0968	0.415
0.535	240	2.66	0.110	0.419	2.72	0.115	0.490
0.579	260	2.89	0.130	0.487	2.95	0.135	0.570
0.624	280	3.11	0.150	0.560	3.18	0.157	0.655
0.668	300	3.33	0.172	0.637	3.40	0.180	0.745
0.713	320	3.55	0.196	0.719	3.63	0.205	0.846
0.758	340	3.78	0.222	0.806	3.86	0.231	0.952
0.802	360	4.00	0.240	0.898	4.08	0.259	1.06
0.847	380	4.22	0.277	0.993	4.31	0.289	1.18
0.891	400	4.44	0.307	1.09	4.54	0.320	1.30

TABLE E4.1 Friction Loss for Water in Feet per 100 Ft of Pipe (*Continued*)

6 in nominal		Steel-schedule 40 ID = 6.065 in $\varepsilon/D = 0.000293$			Asphalt-dipped cast iron ID = 6.00 in $\varepsilon/D = 0.000800$		
Discharge							
ft^3/s	gal/min	V (ft/s)	$V^2/2g$ (ft)	h_f feet per 100 ft of pipe	V (ft/s)	$V^2/2g$ (ft)	h_f feet per 100 ft of pipe
0.936	420	4.66	0.338	1.20	4.76	0.353	1.43
0.980	440	4.89	0.371	1.31	4.99	0.387	1.57
1.025	460	5.11	0.405	1.42	5.22	0.423	1.71
1.07	480	5.33	0.442	1.54	5.45	0.461	1.86
1.11	500	5.55	0.479	1.66	5.67	0.500	2.02
1.23	550	6.11	0.580	1.99	6.24	0.605	2.42
1.34	600	6.66	0.690	2.34	6.81	0.720	2.84
1.45	650	7.22	0.810	2.73	7.37	0.845	3.33
1.56	700	7.77	0.939	3.13	7.94	0.980	3.87
1.67	750	8.33	1.08	3.57	8.51	1.12	4.45
1.78	800	8.88	1.23	4.03	9.08	1.28	5.06
1.89	850	9.44	1.38	4.53	9.64	1.44	5.69
2.01	900	9.99	1.55	5.05	10.2	1.62	6.34
2.12	950	10.5	1.73	5.60	10.8	1.80	7.02
2.23	1 000	11.1	1.92	6.17	11.3	2.00	7.73
2.45	1 100	12.2	2.32	7.41	12.5	2.42	9.80
2.67	1 200	13.3	2.76	8.76	13.6	2.88	11.2
2.90	1 300	14.4	3.24	10.2	14.7	3.38	13.0
3.12	1 400	15.5	3.76	11.8	15.9	3.92	15.1
3.34	1 500	16.7	4.31	13.5	17.0	4.50	17.4
3.56	1 600	17.8	4.91	15.4	18.2	5.12	19.8
3.79	1 700	18.9	5.54	17.3	19.3	5.78	22.3
4.01	1 800	20.0	6.21	19.4	20.4	6.48	24.8
4.23	1 900	21.1	6.92	21.6	21.6	7.22	27.6
4.46	2 000	22.2	7.67	23.8	22.7	8.00	30.5
4.68	2 100	23.3	8.45	26.2	23.8	8.82	33.6
4.90	2 200	24.4	9.27	28.8	25.0	9.68	36.8
5.12	2 300	25.5	10.1	31.4	26.1	10.6	40.1
5.35	2 400	26.6	11.0	34.2	27.2	11.5	43.5
5.57	2 500	27.8	12.0	37.0	28.4	12.5	47.1
5.79	2 600	28.9	13.0	39.9	29.5	13.5	51.0
6.02	2 700	30.0	14.0	42.9	30.6	14.6	55.2
6.24	2 800	31.1	15.0	46.1	31.8	15.7	59.6
6.46	2 900	32.2	16.1	49.4	32.9	16.8	64.1
6.68	3 000	33.3	17.2	52.8	34.0	18.0	68.8
7.13	3 200	35.5	19.6	59.9	36.3	20.5	78.0
7.58	3 400	37.8	22.2	67.4	38.6	23.1	88.0
8.02	3 600	40.0	24.8	75.5	40.8	25.9	98.7
8.47	3 800	42.2	27.7	84.1	43.1	28.9	110
8.91	4 000	44.4	30.7	93.1	45.4	32.0	122

TABLE E4.1 Friction Loss for Water in Feet per 100 Ft of Pipe (*Continued*)

8 in nominal		Steel-schedule 40 ID = 7.981 in $\varepsilon/D = 0.000226$			Asphalt-dipped cast iron ID = 8.00 in $\varepsilon/D = 0.00060$		
Discharge							
ft^3/s	gal/min	V (ft/s)	V^2/2g (ft)	h_f feet per 100 ft of pipe	V (ft/s)	V^2/2g (ft)	h_f feet per 100 ft of pipe
0.0223	10	0.0641	0.0000639	0.000401	0.0638	0.0000633	0.000399
0.0446	20	0.128	0.000256	0.001320	0.128	0.000253	0.001320
0.0668	30	0.192	0.000575	0.00266	0.191	0.000570	0.00269
0.0891	40	0.257	0.00102	0.00442	0.255	0.00101	0.00447
0.111	50	0.321	0.00160	0.00652	0.319	0.00158	0.00664
0.134	60	0.385	0.00230	0.00904	0.382	0.00228	0.00920
0.156	70	0.449	0.00313	0.01190	0.447	0.00310	0.01210
0.178	80	0.513	0.00409	0.0151	0.511	0.00405	0.0154
0.201	90	0.577	0.00518	0.0186	0.574	0.00513	0.0191
0.223	100	0.641	0.00639	0.0224	0.638	0.00633	0.0232
0.267	120	0.770	0.00920	0.0311	0.766	0.00911	0.0323
0.312	140	0.898	0.0125	0.0410	0.893	0.0124	0.0428
0.356	160	1.03	0.0164	0.0521	1.02	0.0162	0.0548
0.401	180	1.15	0.0207	0.0644	1.15	0.0205	0.0681
0.446	200	1.28	0.0256	0.0780	1.28	0.0253	0.0828
0.490	220	1.41	0.0309	0.0928	1.40	0.0306	0.0989
0.535	240	1.54	0.0368	0.1088	1.53	0.0365	0.1163
0.579	260	1.67	0.0432	0.1260	1.66	0.0428	0.135
0.624	280	1.80	0.0501	0.144	1.79	0.0496	0.155
0.668	300	1.92	0.0575	0.163	1.91	0.0570	0.176
0.713	320	2.05	0.0655	0.184	2.04	0.0648	0.198
0.758	340	2.18	0.0739	0.206	2.17	0.0732	0.222
0.802	360	2.31	0.0828	0.229	2.30	0.0820	0.248
0.847	380	2.44	0.0923	0.253	2.43	0.0914	0.275
0.891	400	2.57	0.102	0.279	2.55	0.101	0.304
1.003	450	2.89	0.129	0.348	2.87	0.128	0.380
1.11	500	3.21	0.160	0.424	3.19	0.158	0.464
1.23	550	3.53	0.193	0.507	3.51	0.191	0.557
1.34	600	3.85	0.230	0.597	3.83	0.228	0.658
1.45	650	4.17	0.271	0.694	4.15	0.267	0.767
1.56	700	4.49	0.313	0.797	4.47	0.310	0.884
1.67	750	4.81	0.360	0.907	4.79	0.356	1.01
1.78	800	5.13	0.409	1.02	5.11	0.405	1.14
1.89	850	5.45	0.462	1.147	5.42	0.457	1.29
2.01	900	5.77	0.518	1.27	5.74	0.513	1.44
2.12	950	6.09	0.577	1.41	6.06	0.571	1.60
2.23	1 000	6.41	0.639	1.56	6.38	0.633	1.76
2.45	1 100	7.05	0.773	1.87	7.02	0.766	2.14
2.67	1 200	7.70	0.920	2.20	7.66	0.911	2.53
2.90	1 300	8.34	1.08	2.56	8.30	1.07	2.94

TABLE E4.1 Friction Loss for Water in Feet per 100 Ft of Pipe (*Continued*)

8 in nominal		Steel-schedule 40 ID = 7.981 in $\varepsilon/D = 0.000226$			Asphalt-dipped cast iron ID = 8.00 in $\varepsilon/D = 0.00060$		
Discharge							
ft^3/s	gal/min	V (ft/s)	$V^2/2g$ (ft)	h_f feet per 100 ft of pipe	V (ft/s)	$V^2/2g$ (ft)	h_f feet per 100 ft of pipe
3.12	1 400	8.98	1.25	2.95	8.93	1.24	3.40
3.34	1 500	9.62	1.44	3.37	9.57	1.42	3.91
3.56	1 600	10.3	1.64	3.82	10.2	1.62	4.45
3.79	1 700	10.9	1.85	4.29	10.8	1.83	5.00
4.01	1 800	11.5	2.07	4.79	11.5	2.05	5.58
4.23	1 900	12.2	2.31	5.31	12.1	2.29	6.19
4.46	2 000	12.8	2.56	5.86	12.8	2.53	6.84
4.90	2 200	14.1	3.09	7.02	14.0	3.06	8.26
5.35	2 400	15.4	3.68	8.31	15.3	3.65	9.80
5.79	2 600	16.7	4.32	9.70	16.6	4.28	11.47
6.24	2 800	18.0	5.01	11.20	17.9	4.96	13.3
6.68	3 000	19.2	5.75	12.8	19.1	5.70	15.2
7.13	3 200	20.5	6.55	14.5	20.4	6.48	17.3
7.58	3 400	21.8	7.39	16.4	21.7	7.32	19.5
8.02	3 600	23.1	8.28	18.4	23.0	8.20	21.9
8.47	3 800	24.4	9.23	20.5	24.3	9.14	24.4
8.91	4 000	25.7	10.2	22.6	25.5	10.1	27.0
10.03	4 500	28.9	12.9	28.5	28.7	12.8	34.0
11.1	5 000	32.1	16.0	35.1	31.9	15.8	42.0
12.3	5 550	35.3	19.3	42.5	35.1	19.1	51.0
13.4	6 000	38.5	23.0	50.5	38.3	22.8	60.5
14.5	6 500	41.7	27.0	59.1	41.5	26.7	71.0
15.6	7 000	44.9	31.3	68.3	44.7	31.0	82.0
16.7	7 500	48.1	36.0	78.1	47.9	35.6	94.0
17.8	8 000	51.3	40.9	88.6	51.1	40.5	107

10 in nominal		Steel-schedule 40 ID = 10.020 in $\varepsilon/D = 0.000180$			Asphalt-dipped cast iron ID = 10.00 in $\varepsilon/D = 0.000480$		
Discharge							
ft^3/s	gal/min	V (ft/s)	$V^2/2g$ (ft)	h_f feet per 100 ft of pipe	V (ft/s)	$V^2/2g$ (ft)	h_f feet per 100 ft of pipe
0.0223	10	0.0407	0.0000257	0.000138	0.0409	0.0000259	0.000140
0.0446	20	0.0814	0.000103	0.000451	0.0817	0.000104	0.000460
0.0891	40	0.163	0.000412	0.00149	0.163	0.000415	0.00154
0.134	60	0.244	0.000926	0.00304	0.245	0.000934	0.00315
0.178	80	0.325	0.00165	0.00505	0.327	0.00166	0.00525
0.223	100	0.407	0.00257	0.00747	0.409	0.00259	0.00783
0.267	120	0.488	0.00370	0.0103	0.490	0.00373	0.01085
0.312	140	0.570	0.00504	0.0136	0.572	0.00508	0.0144
0.356	160	0.651	0.00659	0.0174	0.654	0.00664	0.0183
0.401	180	0.732	0.00834	0.0215	0.735	0.00840	0.0227

TABLE E4.1 Friction Loss for Water in Feet per 100 Ft of Pipe (*Continued*)

10 in nominal		Steel-schedule 40 ID = 10.020 in $\varepsilon/D = 0.000180$			Asphalt-dipped cast iron ID = 10.00 in $\varepsilon/D = 0.000480$		
Discharge							
ft^3/s	gal/min	V (ft/s)	V^2/2g (ft)	h_f feet per 100 ft of pipe	V (ft/s)	V^2/2g (ft)	h_f feet per 100 ft of pipe
0.446	200	0.814	0.0103	0.0260	0.817	0.0104	0.0276
0.490	220	0.895	0.0125	0.0309	0.899	0.0126	0.0329
0.535	240	0.976	0.0148	0.0362	0.980	0.0149	0.0387
0.579	260	1.06	0.0174	0.0417	1.06	0.0175	0.0449
0.624	280	1.14	0.0202	0.0478	1.14	0.0203	0.0514
0.668	300	1.22	0.0232	0.0542	1.23	0.0233	0.0583
0.780	350	1.42	0.0315	0.0719	1.43	0.0318	0.0778
0.891	400	1.63	0.0412	0.0917	1.63	0.0415	0.0990
1.003	450	1.83	0.0521	0.114	1.84	0.0525	0.1235
1.11	500	2.03	0.0643	0.138	2.04	0.0648	0.151
1.23	550	2.24	0.0778	0.164	2.25	0.0785	0.181
1.34	600	2.44	0.0926	0.192	2.45	0.0934	0.214
1.45	650	2.64	0.109	0.224	2.66	0.110	0.250
1.56	700	2.85	0.126	0.256	2.86	0.127	0.288
1.67	750	3.05	0.145	0.291	3.06	0.146	0.328
1.78	800	3.25	0.165	0.328	3.27	0.166	0.370
1.89	850	3.46	0.186	0.368	3.47	0.187	0.415
2.01	900	3.66	0.208	0.410	3.68	0.210	0.462
2.12	950	3.87	0.232	0.455	3.88	0.234	0.512
2.23	1 000	4.07	0.257	0.500	4.09	0.259	0.565
2.45	1 100	4.48	0.311	0.600	4.49	0.314	0.680
2.67	1 200	4.88	0.370	0.703	4.90	0.373	0.805
2.90	1 300	5.29	0.435	0.818	5.31	0.438	0.945
3.12	1 400	5.70	0.504	0.940	5.72	0.508	1.09
3.34	1 500	6.10	0.579	1.07	6.13	0.584	1.25
3.56	1 600	6.51	0.659	1.21	6.54	0.664	1.42
3.79	1 700	6.92	0.743	1.36	6.94	0.749	1.60
4.01	1 800	7.32	0.834	1.52	7.35	0.840	1.78
4.23	1 900	7.73	0.929	1.68	7.76	0.936	1.97
4.46	2 000	8.14	1.03	1.86	8.17	1.04	2.17
4.90	2 200	8.95	1.25	2.23	8.99	1.26	2.64
5.35	2 400	9.76	1.48	2.64	9.80	1.49	3.12
5.79	2 600	10.6	1.74	3.08	10.6	1.75	3.63
6.24	2 800	11.4	2.02	3.56	11.4	2.03	4.18
6.68	3 000	12.2	2.32	4.06	12.3	2.33	4.79
7.13	3 200	13.0	2.63	4.59	13.1	2.66	5.47
7.58	3 400	13.8	2.97	5.16	13.9	3.00	6.18
8.02	3 600	14.6	3.33	5.76	14.7	3.36	6.91
8.47	3 800	15.5	3.71	6.40	15.5	3.74	7.68
8.91	4 000	16.3	4.12	7.07	16.3	4.15	8.50

TABLE E4.1 Friction Loss for Water in Feet per 100 Ft of Pipe (*Continued*)

10 in nominal		Steel-schedule 40 ID = 10.020 in $\varepsilon/D = 0.000180$			Asphalt-dipped cast iron ID = 10.00 in $\varepsilon/D = 0.000480$		
Discharge							
ft^3/s	gal/min	V (ft/s)	$V^2/2g$ (ft)	h_f feet per 100 ft of pipe	V (ft/s)	$V^2/2g$ (ft)	h_f feet per 100 ft of pipe
10.03	4 500	18.3	5.21	8.88	18.4	5.25	10.7
11.1	5 000	20.3	6.43	10.9	20.4	6.48	13.2
12.3	5 500	22.4	7.78	13.2	22.5	7.85	15.9
13.4	6 000	24.4	9.26	15.6	24.5	9.34	18.9
14.5	6 500	26.4	10.9	18.3	26.6	11.0	22.2
15.6	7 000	28.5	12.6	21.1	28.6	12.7	25.8
16.7	7 500	30.5	14.5	24.3	30.0	14.6	29.6
17.8	8 000	32.5	16.5	27.5	32.7	16.6	33.6
18.9	8 500	34.6	18.6	30.9	34.7	18.7	37.8
20.1	9 000	36.6	20.8	34.6	36.8	21.0	42.2
21.2	9 500	38.7	23.2	38.5	38.8	23.4	46.9
22.3	10 000	40.7	25.7	42.6	40.9	25.9	51.8

12 in nominal		Steel-schedule 40 D = 11.938 in $\varepsilon/D = 0.000151$			Asphalt-dipped cast iron ID = 12.00 in $\varepsilon/D = 0.000400$		
Discharge							
ft^3/s	gal/min	V (ft/s)	$V^2/2g$ (ft)	h_f feet per 100 ft of pipe	V (ft/s)	$V^2/2g$ (ft)	h_f feet per 100 ft of pipe
0.223	100	0.287	0.00128	0.00325	0.284	0.00125	0.00320
0.267	120	0.344	0.00184	0.00448	0.340	0.00180	0.00445
0.312	140	0.401	0.00250	0.00590	0.397	0.00245	0.00589
0.356	160	0.459	0.00327	0.00747	0.454	0.00320	0.00752
0.401	180	0.516	0.00414	0.00920	0.511	0.00405	0.00932
0.446	200	0.573	0.00511	0.0111	0.567	0.00500	0.01129
0.490	220	0.631	0.00618	0.0132	0.624	0.00605	0.0135
0.535	240	0.688	0.00735	0.0155	0.681	0.00720	0.0158
0.579	260	0.745	0.00863	0.0180	0.738	0.00845	0.0182
0.624	280	0.802	0.0100	0.0206	0.794	0.00980	0.0208
0.668	300	0.860	0.0115	0.0233	0.851	0.0113	0.0236
0.780	350	1.00	0.0156	0.0306	0.993	0.0153	0.0316
0.891	400	1.15	0.0204	0.0391	1.13	0.0200	0.0404
1.00	450	1.29	0.0259	0.0485	1.28	0.0253	0.0500
1.11	500	1.43	0.0319	0.0587	1.42	0.0313	0.0604
1.23	550	1.58	0.0386	0.0698	1.56	0.0378	0.0718
1.34	600	1.72	0.0460	0.0820	1.70	0.0450	0.0845
1.45	650	1.86	0.0539	0.0950	1.84	0.0528	0.0990
1.56	700	2.01	0.0626	0.109	1.99	0.0613	0.115
1.67	750	2.15	0.0718	0.124	2.13	0.0703	0.131
1.78	800	2.29	0.0817	0.140	2.27	0.0800	0.148
1.89	850	2.44	0.0922	0.156	2.41	0.0903	0.166
2.01	900	2.58	0.103	0.173	2.55	0.101	0.184
2.12	950	2.72	0.115	0.191	2.69	0.113	0.203
2.23	1 000	2.87	0.128	0.210	2.84	0.125	0.224

TABLE E4.1 Friction Loss for Water in Feet per 100 Ft of Pipe (*Continued*)

12 in nominal		Steel-schedule 40 D = 11.938 in ε/D = 0.000151			Asphalt-dipped cast iron ID = 12.00 in ε/D = 0.000400		
Discharge							
ft^3/s	gal/min	V (ft/s)	$V^2/2g$ (ft)	h_f feet per 100 ft of pipe	V (ft/s)	$V^2/2g$ (ft)	h_f feet per 100 ft of pipe
2.45	1 100	3.15	0.154	0.251	3.12	0.151	0.272
2.67	1 200	3.44	0.184	0.296	3.40	0.180	0.321
2.90	1 300	3.73	0.216	0.344	3.69	0.211	0.372
3.12	1 400	4.01	0.250	0.395	3.97	0.245	0.428
3.34	1 500	4.30	0.287	0.450	4.26	0.281	0.488
3.56	1 600	4.59	0.327	0.509	4.54	0.320	0.552
3.79	1 700	4.87	0.369	0.572	4.82	0.361	0.621
4.01	1 800	5.16	0.414	0.636	5.11	0.405	0.695
4.23	1 900	5.45	0.461	0.704	5.39	0.451	0.774
4.46	2 000	5.73	0.511	0.776	5.67	0.500	0.858
4.90	2 200	6.31	0.618	0.930	6.24	0.605	1.03
5.35	2 400	6.88	0.735	1.093	6.81	0.720	1.22
5.79	2 600	7.45	0.863	1.28	7.38	0.845	1.43
6.24	2 800	8.03	1.00	1.47	7.94	0.980	1.65
6.68	3 000	8.60	1.15	1.68	8.51	1.13	1.88
7.13	3 200	9.17	1.31	1.90	9.08	1.28	2.13
7.58	3 400	9.75	1.48	2.13	9.65	1.45	2.41
8.02	3 600	10.3	1.65	2.37	10.2	1.62	2.70
8.47	3 800	10.9	1.84	2.63	10.8	1.81	3.00
8.91	4 000	11.5	2.04	2.92	11.3	2.00	3.31
10.03	4 500	12.9	2.59	3.65	12.8	2.53	4.18
11.1	5 000	14.3	3.19	4.47	14.2	3.13	5.13
12.3	5 500	15.8	3.86	5.38	15.6	3.78	6.17
13.4	6 000	17.2	4.60	6.39	17.0	4.50	7.30
14.5	6 500	18.6	5.39	7.47	18.4	5.28	8.55
15.6	7 000	20.1	6.26	8.63	19.9	6.13	9.92
16.7	7 500	21.5	7.18	9.88	21.3	7.03	11.4
17.8	8 000	22.9	8.17	11.20	22.7	8.00	13.0
18.9	8 500	24.4	9.22	12.6	24.1	9.04	14.7
20.1	9 000	25.8	10.3	14.1	25.5	10.1	16.4
21.2	9 500	27.2	11.5	15.7	26.9	11.3	18.2
22.3	10 000	28.7	12.8	17.4	28.4	12.5	20.2
24.5	11 000	31.5	15.4	21.0	31.2	15.1	24.2
26.7	12 000	34.4	18.3	24.8	34.0	18.0	28.8
29.0	13 000	37.3	21.6	28.9	36.9	21.1	34.0
31.2	14 000	40.1	25.0	33.5	39.7	24.5	39.7
33.4	15 000	43.0	28.7	38.4	42.6	28.1	45.7
35.6	16 000	45.9	32.7	43.7	45.4	32.0	51.8
37.9	17 000	48.7	36.9	49.2	48.2	36.1	58.2
40.1	18 000	51.6	41.4	55.2	51.1	40.5	65.0
42.3	19 000	54.5	46.1	61.5	53.9	45.1	72.1
44.6	20 000	57.3	51.1	68.1	56.7	50.0	79.8

TABLE E4.1 Friction Loss for Water in Feet per 100 Ft of Pipe (*Continued*)

16 in nominal		Steel-schedule 40 ID = 15.000 in ε/D = 0.000120			Asphalt-dipped cast iron ID = 16.00 in ε/D = 0.000300		
Discharge							
ft^3/s	gal/min	V (ft/s)	V^2/2g (ft)	h_f feet per 100 ft of pipe	V (ft/s)	V^2/2g (ft)	h_f feet per 100 ft of pipe
0.668	300	0.545	0.00461	0.00769	0.479	0.00356	0.00581
0.891	400	0.726	0.00820	0.0129	0.638	0.00633	0.00980
1.114	500	0.908	0.0128	0.0193	0.798	0.00989	0.0148
1.34	600	1.09	0.0184	0.0269	0.957	0.0142	0.0207
1.56	700	1.27	0.0251	0.0356	1.12	0.0194	0.0276
1.78	800	1.45	0.0328	0.0454	1.28	0.0253	0.0354
2.01	900	1.63	0.0415	0.0563	1.44	0.0320	0.0441
2.23	1 000	1.82	0.0512	0.0683	1.60	0.0396	0.0537
2.67	1 200	2.18	0.0738	0.0953	1.91	0.0570	0.0760
3.12	1 400	2.54	0.1004	0.127	2.23	0.0775	0.101
3.56	1 600	2.90	0.131	0.163	2.55	0.101	0.130
4.01	1 800	3.27	0.166	0.203	2.87	0.128	0.163
4.46	2 000	3.63	0.205	0.248	3.19	0.158	0.200
5.57	2 500	4.54	0.320	0.377	3.99	0.247	0.307
6.68	3 000	5.45	0.461	0.535	4.79	0.356	0.435
7.80	3 500	6.35	0.627	0.718	5.58	0.485	0.584
8.91	4 000	7.26	0.820	0.921	6.38	0.633	0.754
10.02	4 500	8.17	1.04	1.15	7.18	0.801	0.948
11.1	5 000	9.08	1.28	1.41	7.98	0.989	1.17
13.4	6 000	10.9	1.84	2.01	9.57	1.42	1.66
15.6	7 000	12.7	2.51	2.69	11.2	1.94	2.26
17.8	8 000	14.5	3.28	3.49	12.8	2.53	2.96
20.1	9 000	16.3	4.15	4.38	14.4	3.20	3.73
22.3	10 000	18.2	5.12	5.38	16.0	3.96	4.57
24.5	11 000	20.0	6.20	6.49	17.6	4.79	5.50
26.7	12 000	21.8	7.38	7.69	19.1	5.70	6.52
29.0	13 000	23.6	8.66	8.99	20.7	6.69	7.63
31.2	14 000	25.4	10.04	10.4	22.3	7.75	8.81
33.4	15 000	27.2	11.5	11.9	23.9	8.90	10.1
35.6	16 000	29.0	13.1	13.5	25.5	10.1	11.5
37.9	17 000	30.9	14.8	15.3	27.1	11.4	13.0
40.1	18 000	32.7	16.6	17.2	28.7	12.8	14.6
42.3	19 000	34.5	18.5	19.2	30.3	14.3	16.3
44.6	20 000	36.3	20.5	21.2	31.9	15.8	18.1
49.0	22 000	39.9	24.8	25.5	35.1	19.1	21.8
53.5	24 000	43.6	29.5	30.2	38.3	22.8	25.9
57.9	26 000	47.2	34.6	35.4	41.5	26.7	30.4
62.4	28 000	50.8	40.2	41.0	44.7	31.0	35.3
66.8	30 000	54.5	46.1	47.0	47.9	35.6	40.5
71.3	32 000	58.1	52.4	53.5	51.1	40.5	46.0
75.8	34 000	61.7	59.2	60.2	54.3	45.7	51.9
80.2	36 000	65.4	66.4	67.2	57.4	51.3	58.1
84.7	38 000	69.0	74.0	75.0	60.6	57.1	64.7
89.1	40 000	72.6	82.0	83.0	63.8	63.3	71.7
93.6	42 000	76.2	90.4	91.5	67.0	69.8	79.1
98.0	44 000	79.9	99.2	101	70.2	76.6	86.9
102.5	46 000	83.5	108.4	110	73.4	83.7	95.0
107	48 000	87.1	118	118	76.6	91.2	103
111	50 000	90.8	128	128	79.8	98.9	112

TABLE E4.1 Friction Loss for Water in Feet per 100 Ft of Pipe (*Continued*)

18 in nominal		Steel-schedule 40 ID = 16.876 in ε/D = 0.000107			Asphalt-dipped cast iron ID = 18.00 in ε/D = 0.000267		
Discharge							
ft^3/s	gal/min	V (ft/s)	$V^2/2g$ (ft)	h_f feet per 100 ft of pipe	V (ft/s)	$V^2/2g$ (ft)	h_f feet per 100 ft of pipe
0.668	300	0.430	0.00288	0.00437	0.378	0.00222	0.00328
0.891	400	0.574	0.00512	0.00730	0.504	0.00359	0.00554
1.114	500	0.717	0.00799	0.0109	0.630	0.00618	0.00832
1.34	600	0.861	0.0115	0.0152	0.756	0.00889	0.01162
1.56	700	1.00	0.0157	0.0201	0.883	0.0121	0.0154
1.78	800	1.15	0.0205	0.0256	1.01	0.0158	0.0197
2.01	900	1.29	0.0259	0.0318	1.13	0.0200	0.0245
2.23	1 000	1.43	0.0320	0.0386	1.26	0.0247	0.0298
2.67	1 200	1.72	0.0460	0.0541	1.51	0.0356	0.0420
3.12	1 400	2.01	0.0627	0.0719	1.77	0.0484	0.0560
3.56	1 600	2.30	0.0819	0.092	2.02	0.0632	0.0728
4.01	1 800	2.58	0.1036	0.114	2.27	0.0800	0.0910
4.46	2 000	2.87	0.128	0.139	2.52	0.0988	0.110
5.57	2 500	3.59	0.200	0.211	3.15	0.154	0.170
6.68	3 000	4.30	0.288	0.297	3.78	0.222	0.240
7.80	3 500	5.02	0.392	0.397	4.41	0.303	0.320
8.91	4 000	5.74	0.512	0.511	5.04	0.395	0.415
10.02	4 500	6.45	0.647	0.639	5.67	0.500	0.525
11.1	5 000	7.17	0.799	0.781	6.30	0.618	0.645
13.4	6 000	8.61	1.15	1.11	7.56	0.889	0.920
15.6	7 000	10.0	1.57	1.49	8.83	1.21	1.24
17.8	8 000	11.5	2.05	1.93	10.09	1.58	1.61
20.1	9 000	12.9	2.59	2.42	11.3	2.00	2.02
22.3	10 000	14.3	3.20	2.97	12.6	2.47	2.48
26.7	12 000	17.2	4.60	4.21	15.1	3.56	3.56
31.2	14 000	20.1	6.27	5.69	17.7	4.84	4.85
35.6	16 000	22.9	8.19	7.41	20.2	6.32	6.34
40.1	18 000	25.8	10.36	9.33	22.7	8.00	8.02
44.6	20 000	28.7	12.8	11.5	25.2	9.88	9.88
49.0	22 000	31.6	15.5	13.9	27.7	12.0	11.90
53.5	24 000	34.4	18.4	16.5	30.3	14.2	14.10
57.9	26 000	37.3	21.6	19.2	32.8	16.7	16.50
62.4	28 000	40.2	25.1	22.2	35.3	19.4	19.1
66.8	30 000	43.0	28.8	25.5	37.8	22.9	21.9
71.3	32 000	45.9	32.7	29.0	40.3	25.3	24.9
75.8	34 000	48.8	37.0	32.8	42.9	28.6	28.1
80.2	36 000	51.6	41.4	36.8	45.4	32.0	31.5
84.7	38 000	54.5	46.2	40.8	47.9	35.7	35.1
89.1	40 000	57.4	51.2	45.0	50.4	39.5	38.9
93.6	42 000	60.2	56.4	49.7	53.0	43.6	42.9
98	44 000	63.1	61.9	54.5	55.5	47.8	47.0
102	46 000	66.0	67.7	59.5	58.0	52.3	51.3
107	48 000	68.9	73.7	64.8	60.5	56.9	55.8
111	50 000	71.7	79.9	70.2	63.0	61.8	60.5
123	55 000	78.9	96.7	84.8	69.3	74.7	73.0
134	60 000	86.1	115	101	75.6	88.9	86.7
145	65 000	93.2	135	118	82.0	104.4	101.8
156	70 000	100.4	157	136	88.3	121	118

TABLE E4.1 Friction Loss for Water in Feet per 100 Ft of Pipe (*Continued*)

20 in nominal		Steel-schedule 40 ID = 18.812 in ε/D = 0.0000957			Asphalt-dipped cast iron ID = 20.00 in ε/D = 0.000240		
Discharge							
ft^3/s	gal/min	V (ft/s)	$V^2/2g$ (ft)	h_f feet per 100 ft of pipe	V (ft/s)	$V^2/2g$ (ft)	h_f feet per 100 ft of pipe
0.668	300	0.346	0.00186	0.00258	0.306	0.00146	0.00197
0.891	400	0.462	0.00331	0.00432	0.408	0.00259	0.00332
1.114	500	0.577	0.00517	0.00645	0.511	0.00405	0.00496
1.34	600	0.692	0.00745	0.00897	0.613	0.00583	0.00691
1.56	700	0.808	0.0101	0.01186	0.715	0.00794	0.00918
1.78	800	0.923	0.0132	0.0152	0.817	0.0104	0.0117
2.01	900	1.039	0.0168	0.0188	0.919	0.0131	0.0146
2.23	1 000	1.15	0.0207	0.0227	1.02	0.0162	0.0177
2.67	1 200	1.38	0.0298	0.0318	1.23	0.0233	0.0249
3.12	1 400	1.62	0.0406	0.0422	1.43	0.0318	0.0332
3.56	1 600	1.85	0.0530	0.0538	1.63	0.0415	0.0427
4.01	1 800	2.08	0.0671	0.0669	1.84	0.0525	0.0533
4.46	2 000	2.31	0.0828	0.0812	2.04	0.0648	0.0650
5.57	2 500	2.89	0.129	0.123	2.55	0.1013	0.0998
6.68	3 000	3.46	0.186	0.174	3.06	0.146	0.140
7.80	3 500	4.04	0.254	0.232	3.57	0.198	0.188
8.91	4 000	4.62	0.331	0.298	4.08	0.259	0.243
10.02	4 500	5.19	0.419	0.372	4.59	0.328	0.306
11.1	5 000	5.77	0.517	0.455	5.11	0.405	0.376
13.4	6 000	6.92	0.745	0.645	6.13	0.583	0.533
15.6	7 000	8.08	1.014	0.862	7.15	0.794	0.721
17.8	8 000	9.23	1.32	1.11	8.17	1.04	0.935
20.1	9 000	10.39	1.68	1.39	9.19	1.31	1.18
22.3	10 000	11.5	2.07	1.70	10.2	1.62	1.45
26.7	12 000	13.8	2.98	2.44	12.3	2.33	2.07
31.2	14 000	16.2	4.06	3.29	14.3	3.18	2.80
35.6	16 000	18.5	5.30	4.26	16.3	4.15	3.66
40.1	18 000	20.8	6.71	5.35	18.4	5.25	4.62
44.6	20 000	23.1	8.28	6.56	20.4	6.48	5.67
49.0	22 000	25.4	10.02	7.91	22.5	7.84	6.85
53.5	24 000	27.7	11.9	9.39	24.5	9.33	8.13
57.9	26 000	30.0	14.0	11.0	26.5	10.95	9.54
62.4	28 000	32.3	16.2	12.7	28.6	12.7	11.1
66.8	30 000	34.6	18.6	14.6	30.6	14.6	12.7
71.3	32 000	36.9	21.2	16.6	32.7	16.6	14.4
75.8	34 000	39.2	23.9	18.7	34.7	18.7	16.3
80.2	36 000	41.5	26.8	20.9	36.8	21.0	18.2
84.7	38 000	43.9	29.9	23.2	38.8	23.4	20.2
89.1	40 000	46.2	33.1	25.7	40.8	25.9	22.4
93.6	42 000	48.5	36.5	28.4	42.9	28.6	24.7
98	44 000	50.8	40.1	31.3	44.9	31.4	27.1
102	46 000	53.1	43.8	34.2	47.0	34.3	29.7
107	48 000	55.4	47.7	37.1	49.0	37.3	32.4
111	50 000	57.7	51.7	40.0	51.1	40.5	35.2
123	55 000	63.5	62.6	48.3	56.2	49.0	4

TABLE E4.1 Friction Loss for Water in Feet per 100 Ft of Pipe (*Continued*)

20 in nominal		Steel-schedule 40 ID = 18.812 in ε/D = 0.0000957			Asphalt-dipped cast iron ID = 20.00 in ε/D = 0.000240		
Discharge							
ft^3/s	gal/min	V (ft/s)	V^2/2g (ft)	h_f feet per 100 ft of pipe	V (ft/s)	V^2/2g (ft)	h_f feet per 100 ft of pipe
134	60 000	69.2	74.5	57.4	61.3	58.3	50.4
145	65 000	75.0	87.4	67.2	66.4	68.5	59.0
156	70 000	80.8	101.4	77.8	71.5	79.4	68.4
167	75 000	86.6	116	89.3	76.6	91.1	78.6
178	80 000	92.3	132	102	81.7	103.7	89.5
189	85 000	98.1	150	115	86.8	117	101
201	90 000	103.9	168	129	91.9	131	113
212	95 000	109.6	187	143	97.0	146	126
223	100 000	115.4	207	158	102.1	162	139

24 in nominal		Steel-schedule 40 ID = 22.624 in ε/D = 0.0000796			Asphalt-dipped cast iron ID = 24.00 in ε/D = 0.000200		
Discharge							
ft^3/s	gal/min	V (ft/s)	V^2/2g (ft)	h_f feet per 100 ft of pipe	V (ft/s)	V^2/2g (ft)	h_f feet per 100 ft of pipe
0.668	300	0.239	0.000891	0.00107	0.213	0.000703	0.000821
0.891	400	0.319	0.00158	0.00178	0.284	0.00125	0.00137
1.114	500	0.399	0.00247	0.00267	0.355	0.00195	0.00205
1.34	600	0.479	0.00356	0.00371	0.426	0.00281	0.00284
1.56	700	0.559	0.00485	0.00490	0.496	0.00383	0.00376
1.78	800	0.638	0.00633	0.00621	0.567	0.00500	0.00480
2.01	900	0.716	0.00801	0.00767	0.638	0.00633	0.00597
2.23	1 000	0.798	0.00989	0.00928	0.709	0.00782	0.00724
2.67	1 200	0.958	0.0142	0.0129	0.851	0.01126	0.0102
3.12	1 400	1.12	0.0194	0.0171	0.993	0.0153	0.0135
3.56	1 600	1.28	0.0253	0.0219	1.135	0.0200	0.0173
4.01	1 800	1.44	0.0321	0.0272	1.276	0.0253	0.0216
4.46	2 000	1.60	0.0396	0.0330	1.42	0.0313	0.0262
5.57	2 500	1.99	0.0618	0.0499	1.77	0.0489	0.0398
6.68	3 000	2.39	0.0891	0.0700	2.13	0.0703	0.0563
7.80	3 500	2.79	0.121	0.0934	2.48	0.0957	0.0759
8.91	4 000	3.19	0.158	0.120	2.84	0.125	0.098
10.02	4 500	3.59	0.200	0.149	3.19	0.158	0.122
11.1	5 000	3.99	0.247	0.181	3.55	0.195	0.149
13.4	6 000	4.79	0.356	0.257	4.26	0.281	0.211
15.6	7 000	5.59	0.485	0.343	4.96	0.383	0.284
17.8	8 000	6.38	0.633	0.441	5.67	0.500	0.368
20.1	9 000	7.18	0.801	0.551	6.38	0.633	0.464
22.3	10 000	7.98	0.989	0.671	7.09	0.782	0.571
26.7	12 000	9.58	1.42	0.959	8.51	1.126	0.816
31.2	14 000	11.2	1.94	1.29	9.93	1.53	1.11
35.6	16 000	12.8	2.53	1.67	11.35	2.00	1.43
40.1	18 000	14.4	3.21	2.10	12.76	2.53	1.80
44.6	20 000	16.0	3.96	2.58	14.2	3.13	2.21
49.0	22 000	17.6	4.79	3.10	15.6	3.78	2.67

TABLE E4.1 Friction Loss for Water in Feet per 100 Ft of Pipe (*Continued*)

24 in nominal		Steel-schedule 40 ID = 22.624 in ε/D = 0.0000796			Asphalt-dipped cast iron ID = 24.00 in ε/D = 0.000200		
Discharge							
ft^3/s	gal/min	V (ft/s)	V^2/2g (ft)	h_f feet per 100 ft of pipe	V (ft/s)	V^2/2g (ft)	h_f feet per 100 ft of pipe
53.5	24 000	19.2	5.70	3.67	17.0	4.50	3.16
57.9	26 000	20.7	6.69	4.29	18.4	5.28	3.71
62.4	28 000	22.3	7.76	4.96	19.9	6.13	4.32
66.8	30 000	23.9	8.91	5.68	21.3	7.03	4.97
71.3	32 000	25.5	10.13	6.42	22.7	8.00	5.65
75.8	34 000	27.1	11.4	7.22	24.1	9.04	6.35
80.2	36 000	28.7	12.8	8.08	25.5	10.13	7.10
84.7	38 000	30.3	14.3	9.00	26.9	11.3	7.90
89.1	40 000	31.9	15.8	9.98	28.4	12.5	8.75
93.6	42 000	33.5	17.5	11.0	29.8	13.8	9.63
98.0	44 000	35.1	19.2	12.1	31.2	15.1	10.5
102	46 000	36.7	20.9	13.2	32.6	16.5	11.5
107	48 000	38.3	22.8	14.3	34.0	18.0	12.5
111	50 000	39.9	24.7	15.5	35.5	19.5	13.6
123	55 000	43.9	29.9	18.7	39.0	23.6	16.4
134	60 000	47.9	35.6	22.3	42.6	28.1	19.5
145	65 000	51.9	41.8	26.2	46.1	33.0	22.9
156	70 000	55.9	48.5	30.4	49.6	38.3	26.5
167	75 000	59.8	55.7	34.8	53.2	44.0	30.5
178	80 000	63.8	63.3	39.4	56.7	50.0	34.7
189	85 000	67.8	71.5	44.4	60.3	56.5	39.2
201	90 000	71.8	80.1	49.7	63.8	63.3	43.9
212	95 000	75.8	89.3	55.5	67.4	70.5	48.9
223	100 000	79.8	98.9	61.5	70.9	78.2	54.2
245	110 000	87.8	120	74.0	78.0	94.6	65.5
267	120 000	95.8	142	88.0	85.1	113	78.0
290	130 000	103.7	167	103	92.2	132	91.5
312	140 000	112	194	119	99.3	153	106
334	150 000	120	223	137	106	200	121

30 in nominal		Steel-schedule 40 ID = 29.000 in ε/D = 0.0000621			Asphalt-dipped cast iron ID = 30.00 in ε/D = 0.000160		
Discharge							
ft^3/s	gal/min	V (ft/s)	V^2/2g (ft)	h_f feet per 100 ft of pipe	V (ft/s)	V^2/2g (ft)	h_f feet per 100 ft of pipe
0.891	400	0.194	0.000587	0.000540	0.182	0.000512	0.000466
1.114	500	0.243	0.000917	0.000805	0.227	0.000800	0.000695
1.34	600	0.291	0.00132	0.001115	0.272	0.00115	0.000964
1.56	700	0.340	0.00180	0.00147	0.318	0.00157	0.00128
1.78	800	0.389	0.00235	0.00187	0.363	0.00205	0.00163
2.01	900	0.437	0.00297	0.00231	0.408	0.00259	0.00202
2.23	1 000	0.486	0.00367	0.00280	0.454	0.00320	0.00244
2.67	1 200	0.583	0.00528	0.00390	0.545	0.00461	0.00343
3.12	1 400	0.680	0.00719	0.00514	0.635	0.00627	0.00452
3.56	1 600	0.777	0.00939	0.00652	0.726	0.00819	0.00577

TABLE E4.1 Friction Loss for Water in Feet per 100 Ft of Pipe (*Continued*)

30 in nominal		Steel-schedule 40 ID = 29.000 in $\varepsilon/D = 0.0000621$			Asphalt-dipped cast iron ID = 30.00 in $\varepsilon/D = 0.000160$		
Discharge							
ft^3/s	gal/min	V (ft/s)	$V^2/2g$ (ft)	h_f feet per 100 ft of pipe	V (ft/s)	$V^2/2g$ (ft)	h_f feet per 100 ft of pipe
4.01	1 800	0.874	0.0119	0.00814	0.817	0.0104	0.00720
4.46	2 000	0.971	0.0147	0.00986	0.908	0.0128	0.00876
5.57	2 500	1.21	0.0229	0.0148	1.13	0.0200	0.0132
6.68	3 000	1.46	0.0330	0.0206	1.36	0.0288	0.0186
7.80	3 500	1.70	0.0449	0.0276	1.59	0.0392	0.0248
8.91	4 000	1.94	0.0587	0.0354	1.82	0.0512	0.0320
10.02	4 500	2.19	0.0742	0.0440	2.04	0.0648	0.0400
11.14	5 000	2.43	0.0917	0.0535	2.27	0.0800	0.0488
13.4	6 000	2.91	0.132	0.0750	2.72	0.115	0.0690
15.6	7 000	3.40	0.180	0.100	3.18	0.157	0.0923
17.8	8 000	3.89	0.235	0.129	3.63	0.205	0.119
20.1	9 000	4.37	0.297	0.161	4.08	0.259	0.149
22.3	10 000	4.86	0.367	0.196	4.54	0.320	0.183
26.7	12 000	5.83	0.528	0.277	5.45	0.461	0.260
31.2	14 000	6.80	0.719	0.371	6.35	0.627	0.351
35.6	16 000	7.77	0.939	0.478	7.26	0.819	0.455
40.1	18 000	8.74	1.19	0.598	8.17	1.04	0.572
44.6	20 000	9.71	1.47	0.732	9.08	1.28	0.703
55.7	25 000	12.1	2.29	1.13	11.3	2.00	1.09
66.8	30 000	14.6	3.30	1.61	13.6	2.88	1.57
78.0	35 000	17.0	4.49	2.17	15.9	3.92	2.13
89.1	40 000	19.4	5.87	2.83	18.2	5.12	2.77
100	45 000	21.9	7.42	3.56	20.4	6.48	3.50
111	50 000	24.3	9.17	4.38	22.7	8.00	4.30
134	60 000	29.1	13.2	6.23	27.2	11.5	6.19
156	70 000	34.0	18.0	8.43	31.8	15.7	8.39
178	80 000	38.9	23.5	11.0	36.3	20.5	10.9
201	90 000	43.7	29.7	13.8	40.8	25.9	13.8
223	100 000	48.6	36.7	17.0	45.4	32.0	17.0
245	110 000	53.4	44.4	20.6	49.9	38.7	20.5
267	120 000	58.3	52.8	24.5	54.5	46.1	24.4
290	130 000	63.1	62.0	28.7	59.0	54.1	28.6
312	140 000	68.0	71.9	33.3	63.5	62.7	33.1
334	150 000	72.9	82.5	38.2	68.1	72.0	38.0
356	160 000	77.7	93.9	43.3	72.6	81.9	43.2
379	170 000	82.6	106	48.8	77.2	92.5	48.7
401	180 000	87.4	119	54.7	81.7	104	54.7
423	190 000	92.3	132	60.8	86.2	116	61.0
446	200 000	97.1	147	67.1	90.8	128	67.6
468	210 000	102	162	73.8	95.3	141	74.5
490	220 000	107	177	81.0	99.8	155	81.7
512	230 000	112	194	88.6	104	169	89.2
535	240 000	117	211	96.7	109	184	97.0
557	250 000	121	229	106	113	200	105

TABLE E4.1 Friction Loss for Water in Feet per 100 Ft of Pipe (*Continued*)

36 in ID				Steel $\varepsilon/D = 0.0000500$	Cast iron $\varepsilon/D = 0.000133$
Discharge					
ft^3/s	gal/min	V (ft/s)	$V^2/2g$ (ft)	h_f feet per 100 ft of pipe	h_f feet per 100 ft of pipe
2.23	1 000	0.315	0.00154	0.000988	0.00101
2.67	1 200	0.378	0.00222	0.00137	0.00140
3.12	1 400	0.441	0.00303	0.00181	0.00186
3.56	1 600	0.504	0.00395	0.00231	0.00237
4.01	1 800	0.567	0.00500	0.00285	0.00295
4.46	2 000	0.630	0.00618	0.00344	0.00357
5.57	2 500	0.788	0.00965	0.00517	0.00538
6.68	3 000	0.946	0.0139	0.00721	0.00751
7.80	3 500	1.103	0.0189	0.00957	0.0101
8.91	4 000	1.26	0.0247	0.0122	0.0129
10.02	4 500	1.41	0.0313	0.0152	0.0161
11.14	5 000	1.58	0.0386	0.0185	0.0196
13.4	6 000	1.89	0.0556	0.0260	0.0276
15.6	7 000	2.21	0.0756	0.0345	0.0369
17.8	8 000	2.52	0.0988	0.0442	0.0475
20.1	9 000	2.84	0.125	0.0551	0.0593
22.3	10 000	3.15	0.154	0.0670	0.0724
26.7	12 000	3.78	0.222	0.0942	0.103
31.2	14 000	4.41	0.303	0.126	0.139
35.6	16 000	5.04	0.395	0.162	0.180
40.1	18 000	5.67	0.500	0.203	0.227
44.6	20 000	6.30	0.618	0.248	0.279
55.7	25 000	7.88	0.965	0.378	0.430
66.8	30 000	9.46	1.39	0.540	0.617
78.0	35 000	11.03	1.89	0.724	0.832
89.1	40 000	12.6	2.47	0.941	1.08
100	45 000	14.1	3.13	1.18	1.36
111	50 000	15.8	3.86	1.45	1.68
134	60 000	18.9	5.56	2.07	2.40
156	70 000	22.1	7.56	2.81	3.25
178	80 000	25.2	9.88	3.66	4.23
201	90 000	28.4	12.5	4.59	5.34
223	100 000	31.5	15.4	5.64	6.58
267	120 000	37.8	22.2	8.05	9.50
312	140 000	44.1	30.3	10.9	12.9
356	160 000	50.4	39.5	14.2	16.8
401	180 000	56.7	50.0	17.9	21.3
446	200 000	63.0	61.8	22.1	26.3
557	250 000	78.8	96.5	34.4	41.0
668	300 000	94.6	139	49.4	58.8
780	350 000	110	189	67.0	80.0
891	400 000	126	247	87.3	105

TABLE E4.1 Friction Loss for Water in Feet per 100 Ft of Pipe (*Continued*)

42 in ID				Steel $\varepsilon/D = 0.0000429$	Cast iron $\varepsilon/D = 0.000114$
Discharge				h_f feet per 100 ft of pipe	h_f feet per 100 ft of pipe
ft^3/s	gal/min	V (ft/s)	V^2/2g (ft)		
2.23	1 000	0.232	0.000833	0.000471	0.000481
3.34	1 500	0.347	0.00187	0.000977	0.000997
4.46	2 000	0.463	0.00333	0.00164	0.00168
5.57	2 500	0.579	0.00521	0.00246	0.00252
6.68	3 000	0.695	0.00750	0.00343	0.00353
7.80	3 500	0.811	0.0102	0.00454	0.00470
8.91	4 000	0.926	0.0133	0.00580	0.00602
10.02	4 500	1.042	0.0169	0.00720	0.00750
11.14	5 000	1.16	0.0208	0.00874	0.00915
13.4	6 000	1.39	0.0300	0.0122	0.0128
15.6	7 000	1.62	0.0408	0.0162	0.0172
17.8	8 000	1.85	0.0533	0.0208	0.0222
20.1	9 000	2.08	0.0675	0.0258	0.0276
22.3	10 000	2.32	0.0833	0.0314	0.0337
26.7	12 000	2.78	0.120	0.0441	0.0477
31.2	14 000	3.24	0.163	0.0591	0.0641
35.6	16 000	3.71	0.213	0.0758	0.0829
40.1	18 000	4.17	0.270	0.0944	0.104
44.6	20 000	4.63	0.333	0.115	0.127
55.7	25 000	5.79	0.521	0.176	0.196
66.8	30 000	6.95	0.750	0.250	0.279
78.0	35 000	8.11	1.02	0.334	0.377
89.1	40 000	9.26	1.33	0.433	0.490
100	45 000	10.42	1.69	0.545	0.619
111	50 000	11.6	2.08	0.668	0.760
134	60 000	13.9	3.00	0.946	1.09
156	70 000	16.2	4.08	1.27	1.48
178	80 000	18.5	5.33	1.66	1.92
201	90 000	20.8	6.75	2.08	2.42
223	100 000	23.2	8.33	2.57	2.98
267	120 000	27.8	12.0	3.67	4.30
312	140 000	32.4	16.3	4.98	5.82
356	160 000	37.1	21.3	6.46	7.58
401	180 000	41.7	27.0	8.12	9.58
446	200 000	46.3	33.3	10.00	11.8
557	250 000	57.9	52.1	15.6	18.4
668	300 000	69.5	75.0	22.3	26.5
780	350 000	81.1	102	30.4	36.1
891	400 000	92.6	133	39.6	47.2
1002	450 000	104.2	169	50.1	59.7
1114	500 000	116	208	67.7	73.6

TABLE E4.1 Friction Loss for Water in Feet per 100 Ft of Pipe (*Continued*)

48 in ID				Steel $\varepsilon/D = 0.0000375$	Cast iron $\varepsilon/D = 0.000100$
Discharge					
ft^3/s	gal/min	V (ft/s)	V^2/2g (ft)	h_f feet per 100 ft of pipe	h_f feet per 100 ft of pipe
3.34	1 500	0.266	0.00110	0.000508	0.000521
4.46	2 000	0.355	0.00195	0.000855	0.000883
5.57	2 500	0.443	0.00305	0.00129	0.00133
6.68	3 000	0.532	0.00440	0.00180	0.00185
7.80	3 500	0.621	0.00598	0.00238	0.00245
8.91	4 000	0.709	0.00782	0.00304	0.00314
10.02	4 500	0.798	0.00989	0.00378	0.00391
11.14	5 000	0.887	0.01221	0.00458	0.00474
13.4	6 000	1.064	0.0176	0.00636	0.00667
15.6	7 000	1.24	0.0239	0.00844	0.00890
17.8	8 000	1.42	0.0313	0.0108	0.0114
20.1	9 000	1.60	0.0396	0.0134	0.0142
22.3	10 000	1.77	0.0489	0.0163	0.0173
26.7	12 000	2.13	0.0703	0.0229	0.0244
31.2	14 000	2.48	0.0957	0.0305	0.0327
35.6	16 000	2.84	0.125	0.0391	0.0422
40.1	18 000	3.19	0.158	0.0488	0.0529
44.6	20 000	3.55	0.195	0.0598	0.0648
55.7	25 000	4.43	0.305	0.0910	0.0996
66.8	30 000	5.32	0.440	0.128	0.142
78.0	35 000	6.21	0.598	0.172	0.192
89.1	40 000	7.09	0.782	0.222	0.248
100.2	45 000	7.98	0.989	0.278	0.314
111.4	50 000	8.87	1.221	0.341	0.384
134	60 000	10.64	1.76	0.484	0.548
156	70 000	12.4	2.39	0.652	0.742
178	80 000	14.2	3.13	0.849	0.968
201	90 000	16.0	3.96	1.06	1.22
223	100 000	17.7	4.89	1.30	1.50
267	120 000	21.3	7.03	1.87	2.15
312	140 000	24.8	9.57	2.51	2.92
356	160 000	28.4	12.5	3.26	3.81
401	180 000	31.9	15.8	4.11	4.83
446	200 000	35.5	19.5	5.05	5.97
557	250 000	44.3	30.5	7.88	9.28
668	300 000	53.2	44.0	11.3	13.4
780	350 000	62.1	59.8	15.3	18.2
891	400 000	70.9	78.2	20.0	23.7
1002	450 000	79.8	98.9	25.2	29.9
1114	500 000	88.7	122.1	31.1	36.8
1225	550 000	97.5	148	37.6	44.5
1337	600 000	106.4	176	44.7	53.0

TABLE E4.1 Friction Loss for Water in Feet per 100 Ft of Pipe (*Continued*)

60 in ID				Steel $\varepsilon/D = 0.0000300$	Cast iron $\varepsilon/D = 0.000800$
Discharge		V (ft/s)	$V^2/2g$ (ft)	h_f feet per 100 ft of pipe	h_f feet per 100 ft of pipe
ft^3/s	gal/min				
4.46	2 000	0.227	0.000800	0.000293	0.000298
5.57	2 500	0.284	0.00125	0.000440	0.000446
6.68	3 000	0.340	0.00180	0.000612	0.000621
7.80	3 500	0.397	0.00245	0.000810	0.000824
8.91	4 000	0.454	0.00320	0.00103	0.00105
10.02	4 500	0.511	0.00405	0.00128	0.00131
11.14	5 000	0.567	0.00500	0.00155	0.00159
13.4	6 000	0.681	0.00720	0.00216	0.00223
15.6	7 000	0.794	0.00980	0.00285	0.00297
17.8	8 000	0.908	0.0128	0.00365	0.00382
20.1	9 000	1.021	0.0162	0.00454	0.00476
22.3	10 000	1.13	0.0200	0.00550	0.00579
26.7	12 000	1.36	0.0288	0.00766	0.00815
31.2	14 000	1.59	0.0392	0.0102	0.0108
35.6	16 000	1.82	0.0512	0.0131	0.0140
40.1	18 000	2.04	0.0648	0.0163	0.0174
44.6	20 000	2.27	0.0800	0.0198	0.0212
55.7	25 000	2.84	0.125	0.0301	0.0325
66.8	30 000	3.40	0.180	0.0424	0.0460
78.0	35 000	3.97	0.245	0.0567	0.0618
89.1	40 000	4.54	0.320	0.0730	0.0800
100.2	45 000	5.11	0.405	0.0916	0.100
111.4	50 000	5.67	0.500	0.112	0.124
134	60 000	6.81	0.720	0.158	0.176
156	70 000	7.94	0.980	0.213	0.237
178	80 000	9.08	1.28	0.275	0.307
201	90 000	10.21	1.62	0.344	0.387
223	100 000	11.3	2.00	0.420	0.478
267	120 000	13.6	2.88	0.600	0.688
312	140 000	15.9	3.92	0.806	0.930
356	160 000	18.2	5.12	1.04	1.20
401	180 000	20.4	6.48	1.32	1.52
446	200 000	22.7	8.00	1.62	1.87
557	250 000	28.4	12.5	2.52	2.92
668	300 000	34.0	18.0	3.60	4.20
780	350 000	39.7	24.5	4.88	5.71
891	400 000	45.4	32.0	6.34	7.42
1002	450 000	51.1	40.5	8.01	9.40
1114	500 000	56.7	50.0	9.87	11.6
1225	550 000	62.4	60.5	11.9	14.0
1337	600 000	68.1	72.0	14.1	16.7
1448	650 000	73.8	84.5	16.6	19.6
1560	700 000	79.4	98.0	19.2	22.7
1671	750 000	85.1	112.6	22.0	26.0
1782	800 000	90.8	128	25.0	29.6

TABLE E4.1 Friction Loss for Water in Feet per 100 Ft of Pipe (*Continued*)

84 in ID				Steel $\varepsilon/D = 0.0000214$	Cast iron $\varepsilon/D = 0.000571$
Discharge					
ft^3/s	gal/min	V (ft/s)	V^2/2g (ft)	h_f feet per 100 ft of pipe	h_f feet per 100 ft of pipe
6.68	3 000	0.174	0.000469	0.000121	0.000122
8.91	4 000	0.232	0.000833	0.000203	0.000206
11.14	5 000	0.289	0.00130	0.000306	0.000309
13.4	6 000	0.347	0.00188	0.000425	0.000432
15.6	7 000	0.405	0.00255	0.000562	0.000573
17.8	8 000	0.463	0.00333	0.000717	0.000731
20.1	9 000	0.521	0.00422	0.000891	0.000910
22.3	10 000	0.579	0.00521	0.00108	0.00110
26.7	12 000	0.695	0.00750	0.00150	0.00154
31.2	14 000	0.811	0.01021	0.00199	0.00205
35.6	16 000	0.926	0.0133	0.00255	0.00262
40.1	18 000	1.042	0.0169	0.00316	0.00327
44.6	20 000	1.16	0.0208	0.00384	0.00400
55.7	25 000	1.45	0.0326	0.00579	0.00606
66.8	30 000	1.74	0.0469	0.00810	0.00858
78.0	35 000	2.03	0.0638	0.0108	0.0115
89.1	40 000	2.32	0.0833	0.0139	0.0148
100.2	45 000	2.61	0.105	0.0174	0.0185
111.4	50 000	2.89	0.130	0.0212	0.0226
134	60 000	3.47	0.180	0.0298	0.0321
156	70 000	4.05	0.255	0.0398	0.0431
178	80 000	4.63	0.333	0.0513	0.0558
201	90 000	5.21	0.422	0.0640	0.0700
223	100 000	5.79	0.521	0.0781	0.0866
267	120 000	6.95	0.750	0.111	0.122
312	140 000	8.11	1.021	0.149	0.166
356	160 000	9.26	1.33	0.193	0.216
401	180 000	10.42	1.69	0.242	0.272
446	200 000	11.6	2.08	0.297	0.334
557	250 000	14.5	3.26	0.458	0.516
668	300 000	17.4	4.69	0.649	0.740
780	350 000	20.3	6.38	0.880	1.00
891	400 000	23.2	8.33	1.14	1.30
1002	450 000	26.1	10.5	1.44	1.65
1114	500 000	28.9	13.0	1.78	2.04
1225	550 000	31.8	15.8	2.14	2.47
1337	600 000	34.7	18.0	2.54	2.94
1448	650 000	37.6	22.0	2.97	3.45
1560	700 000	40.5	25.5	3.43	4.00
1671	750 000	43.4	29.3	3.93	4.58
1782	800 000	46.3	33.3	4.47	5.20
1894	850 000	49.2	37.6	5.04	5.87
2005	900 000	52.1	42.2	5.64	6.58
2117	950 000	55.0	47.0	6.29	7.32
2228	1 000 000	57.9	52.1	6.95	8.10

Note: No allowance has been made for age, differences in diameter, or any abnormal condition of interior surface. Any factor of safety must be estimated from the local conditions and the requirements of each particular installation.

Source: Friction loss, h_f, is derived from Darcy-Weisbach equations. (*Hydraulic Institute Engineering Data Book,* Table IIIB-4).

APPENDIX E4M

FRICTION LOSS FOR WATER IN METERS PER 100 METERS OF PIPE

Troy J. Skillen
Mechanical Engineer
Bechtel Power Corporation
Frederick, Maryland

Example E4M.1:

Calculate hf in NPS 4 (DN 100) steel-schedule 40 pipe in meters per 100 m with flow of 100 gallons per minute (gpm).

(1 U. S. gallon = 3.7853 liters).

Refer to Table E1.5 in App. E1.

From App. E4:

hf per 100 ft of length of pipe = 0.624 ft (for 100 gpm)

100 ft = 30.48 m

$$\text{hf in 100 ft length of pipe} = 0.624 \text{ ft}$$

$$\text{or} \qquad = 0.624 * 0.0348 \text{ m} = 0.190 \text{ m}$$

$$\text{hf in 30.48 m length of pipe} = 0.190 \text{ m}$$

$$\text{hf in 100 m length of pipe} = \frac{0.190 \text{ m}}{30.48} * 100 \text{ m}$$

$$\text{or} \qquad = 0.623 \text{ m}$$

Example E4M.2:

Calculate hf in NPS 6 (DN 150) steel-schedule 40 pipe in meters per 100 m with flow of 1000 gallons per minute (gpm).

(1 U. S. gallon = 3.7853 liters).

Refer to Table E1.5 in App. E1.

From App. E4:

hf per 100 ft of length of pipe = 6.17 ft (for 100 gpm)

100 ft = 30.48 m

hf in 100 ft length of pipe = 6.17 ft

or $= 6.17 * 0.0348 \text{ m} = 0.215 \text{ m}$

hf in 30.48 m length of pipe = 0.215 m

hf in 100 m length of pipe $= \dfrac{0.215 \text{ m}}{30.48} * 100 \text{ m}$

or $= 0.705 \text{ m}$

Example E4M.3:

Calculate hf in NPS 24 steel-schedule 40 pipe in meters per 100 m with flow of 60,000 gallons per minute (gpm).

(1 U. S. gallon = 3.7853 liters).

Refer to Table E1.5 in App. E1.

From App. E4:

hf per 100 ft of length of pipe = 22.3 ft (for 60,000 gmp)

100 ft = 30.48 m

hf in 100 ft length of pipe = 22.3 ft

or $= 22.3 * 0.0348 \text{ m} = 0.776 \text{ m}$

hf in 30.48 m length of pipe = 0.776 m

hf in 100 m length of pipe $= \dfrac{0.776 \text{ m}}{30.48} * 100 \text{ m}$

or $= 2.55 \text{ m}$

APPENDIX E5

PIPE, TUBE, AND FITTING MATERIAL SPECIFICATIONS ACCEPTABLE FOR ASME B31, PRESSURE PIPING CODE, AND ASME BOILER AND PRESSURE VESSEL CODE

Jill M. Hershey
Mechanical Engineer
Bechtel Power Corporation
Frederick, Maryland

TABLE E5.1 Carbon Steel Pipe, Tube, and Fittings (1), (2)

Mat'l spec	Description	Notes	B31.1	B31.3	B31.4	B31.5	B31.8	B31.9	B31.11	ASME I	ASME III
A53	Seamless pipe	(3)(4)	YES	YES	YES	YES	YES	YES	YES	YES	YES
A106	Seamless pipe	(3)	YES	YES	YES	YES	YES	YES	YES	YES	YES
A333	Seamless pipe	(3)	YES	YES	NO	YES	YES	NO	NO	NO	YES
A369	Seamless pipe	(3)	YES	YES	NO	NO	NO	NO	NO	YES	YES
API-5L	Seamless pipe	(3)	YES	YES	YES	YES	YES	YES	YES	NO	NO
A524	Seamless pipe/tube	—	NO	YES	YES	NO	NO	NO	YES	NO	YES
A179	Seamless tube	—	YES	YES	NO	YES	NO	NO	YES	NO	NO
A192	Seamless tube	—	YES	NO	NO	YES	NO	NO	NO	YES	NO
A210	Seamless tube	(3)	YES	NO	NO	YES	NO	NO	NO	YES	YES
A334	Seamless tube	—	NO	YES	NO	YES	NO	NO	NO	NO	YES
A53	Seamwelded pipe	(4)	YES	YES	YES	YES	NO	YES	YES	YES	YES
A134	Seamwelded pipe	(3)(6)	YES	YES	YES	YES	YES	NO	YES	NO	NO
A135	Seamwelded pipe	—	YES	YES	YES	YES	YES	YES	YES	NO	NO
A139	Seamwelded pipe	(3)(5)	YES	YES	YES	YES	YES	NO	YES	NO	NO
A211	Seamwelded pipe	(3)	YES	YES	NO	YES	YES	YES	YES	NO	NO
A333	Seamwelded pipe	—	YES	YES	NO	YES	YES	NO	NO	NO	YES
A381	Seamwelded pipe	—	NO	YES	YES	NO	YES	NO	YES	NO	NO
A587	Seamwelded pipe	—	YES	YES	NO	YES	NO	NO	NO	NO	YES
A671	Seamwelded pipe	(3)	YES	YES	YES	NO	YES	NO	YES	NO	YES
A672	Seamwelded pipe	(3)	YES	YES	YES	NO	YES	NO	YES	NO	YES
A691	Seamwelded pipe	(3)	YES	YES	NO	NO	NO	NO	YES	NO	YES
API-5L	Seamwelded pipe	(3)	YES	YES	YES	YES	YES	YES	YES	NO	NO
API-5LU	Seamwelded pipe	—	NO	NO	YES	NO	NO	NO	YES	NO	NO
A178	Seamwelded tube	—	YES	NO	NO	YES	NO	NO	NO	YES	YES
A214	Seamwelded tube	—	YES	NO	NO	YES	NO	NO	NO	NO	NO
A226	Seamwelded tube	—	YES	NO	NO	YES	NO	NO	NO	YES	NO
A105	Fittings	(3)	NO	YES	YES	YES	YES	YES	YES	YES	YES
A181	Fittings	(3)	NO	YES	YES	YES	NO	YES	YES	YES	YES
A234	Fittings	(3)	YES	YES	YES	YES	NO	YES	YES	YES	YES
A350	Fittings	(3)	NO	YES	YES	YES	NO	NO	YES	NO	YES
A420	Fittings	(3)	NO	YES	NO	YES	NO	NO	YES	NO	YES
A694	Fittings	(3)	NO	NO	YES	NO	NO	NO	YES	NO	NO

(1) For materials acceptable for use in ASME I and/or ASME III applications, use ASME specifications (e.g., SA 234) in lieu of ASTM specifications (e.g., A 234). The ASME specifications for ferrous materials are prefixed by SA, whereas ASTM specifications are prefixed by A.

(2) For limitations or additional requirements on use of these material specifications, refer to the applicable Code.

Notes: (3) Refer to code for acceptable grades, class, temper, and/or UNS Number. (4) Excluding grade F. (5) For sizes 4″ and over. (6) For sizes 16″ and over.

TABLE E5.2 Alloy Steel Pipe, Tube, and Fittings (1), (2)

Mat'l spec	Description	Notes	B31.1	B31.3	B31.4	B31.5	B31.8	B31.9	B31.11	ASME I	ASME III
A333	Seamless pipe	(3)	YES	YES	NO	YES	YES	NO	NO	NO	YES
A335	Seamless pipe	(3)	YES	YES	NO	NO	NO	NO	NO	YES	YES
A369	Seamless pipe	(3)	YES	YES	NO	NO	NO	NO	NO	YES	YES
A714	Seamless pipe		YES	NO	NO	NO	NO	NO	NO	NO	NO
A199	Seamless tube	(3)	YES	NO	NO	NO	NO	NO	NO	NO	NO
A213	Seamless tube	(3)	YES	NO	NO	YES	NO	NO	NO	YES	YES
A334	Seamless tube		NO	YES	NO	YES	NO	NO	NO	NO	YES
A333	Seamwelded pipe	(3)	YES	YES	NO	YES	YES	NO	NO	NO	YES
A671	Seamwelded pipe		NO	YES	YES	NO	YES	NO	YES	NO	YES
A672	Seamwelded pipe	(3)	YES	YES	YES	NO	YES	NO	YES	NO	YES
A691	Seamwelded pipe	(3)	YES	YES	NO	NO	NO	NO	YES	NO	YES
A714	Seamwelded pipe		YES	NO	NO	NO	NO	NO	NO	NO	NO
A182	Fittings	(3)	NO	YES	YES	YES	NO	NO	YES	YES	YES
A234	Fittings	(3)	YES	YES	YES	YES	NO	YES	YES	YES	YES
A350	Fittings		NO	YES	YES	YES	NO	NO	YES	NO	YES
A420	Fittings	(3)	NO	YES	NO	YES	NO	NO	YES	NO	YES
A694	Fittings		NO	NO	YES	NO	NO	NO	YES	NO	NO

(1) For materials acceptable for use in ASME I and/or ASME III applications, use ASME specifications (e.g., SA 234) in lieu of ASTM specifications (e.g., A 234). The ASME specifications for ferrous materials are prefixed by SA, whereas ASTM specifications are prefixed by A.

(2) For limitations or additional requirements on use of these material specifications, refer to the applicable Code.

Note: (3) Refer to code for acceptable grades, class, temper, and/or UNS Number.

TABLE E5.3 Stainless Steel Pipe, Tube, and Fittings (1), (2)

Mat'l spec	Description	Notes	B31.1	B31.3	B31.4	B31.5	B31.8	B31.9	B31.11	ASME I	ASME III
A312	Seamless pipe	(3)	YES	YES	NO	YES	NO	YES	NO	YES	YES
A376	Seamless pipe	(3)	YES	YES	NO	YES	NO	NO	NO	YES	YES
A430	Seamless pipe	(3)	YES	YES	NO	NO	NO	NO	NO	YES	YES
A731	Seamless pipe	(3)	YES	NO	NO	NO	NO	NO	NO	NO	NO
A790	Seamless pipe		NO	YES	NO	NO	NO	NO	NO	NO	NO
A213	Seamless tube	(3)	YES	NO	NO	NO	NO	NO	NO	YES	YES
A268	Seamless tube	(3)	YES	YES	NO	NO	NO	NO	NO	YES	YES
A269	Seamless tube		NO	YES	NO	YES	NO	NO	NO	NO	NO
A789	Seamless tube		NO	YES	NO	NO	NO	NO	NO	NO	NO
A312	Seamwelded pipe		YES	YES	NO	YES	NO	NO	NO	YES	YES
A358	Seamwelded pipe	(3)	YES	YES	NO	YES	NO	NO	NO	NO	YES
A409	Seamwelded pipe		NO	YES	NO	YES	NO	NO	NO	NO	YES
A731	Seamwelded pipe		YES	NO	NO	NO	NO	NO	NO	NO	NO
A790	Seamwelded pipe		NO	YES	NO	NO	NO	NO	NO	NO	NO
A249	Seamwelded tube		YES	NO	NO	YES	NO	NO	NO	YES	YES
A268	Seamwelded tube		YES	YES	NO	NO	NO	NO	NO	YES	YES
A269	Seamwelded tube		NO	YES	NO	YES	NO	NO	NO	NO	NO
A789	Seamwelded tube		NO	YES	NO	NO	NO	NO	NO	NO	NO
A182	Fittings	(3)	NO	YES	NO	NO	NO	NO	NO	YES	YES
A403	Fittings	(3)	YES	YES	NO	YES	NO	YES	NO	NO	YES

(1) For materials acceptable for use in ASME I and/or ASME III applications, use ASME specifications (e.g., SA 182) in lieu of ASTM specifications (e.g., A 182). The ASME specifications for ferrous materials are prefixed by SA, whereas ASTM specifications are prefixed by A.

(2) For limitations or additional requirements on use of these material specifications, refer to the applicable Code.

Note: (3) Refer to code for acceptable grades, class, temper, and/or UNS Number.

TABLE E5.4 Nickel and Nickel Alloy Pipe, Tube, and Fittings (1), (2)

Mat'l spec	Description	Notes	B31.1	B31.3	B31.4	B31.5	B31.8	B31.9	B31.11	ASME I	ASME III
B165	Seamless pipe/tube	(3)	YES	YES	NO	YES	NO	NO	NO	NO	NO
B167	Seamless pipe/tube	(3)	YES	YES	NO	NO	NO	NO	NO	NO	NO
B407	Seamless pipe/tube	(3)	YES	YES	NO	NO	NO	NO	NO	NO	NO
B423	Seamless pipe/tube	(3)	YES	NO	NO	NO	NO	NO	NO	NO	NO
B444	Seamless pipe/tube		NO	YES	NO	NO	NO	NO	NO	NO	NO
B622	Seamless pipe/tube		NO	YES	NO	NO	NO	NO	NO	NO	NO
B690	Seamless pipe/tube	(3)	YES	YES	NO	NO	NO	NO	NO	NO	NO
B729	Seamless pipe/tube	(3)	YES	YES	NO	NO	NO	NO	NO	NO	NO
B161	Seamless tube	(3)	YES	YES	NO	NO	NO	NO	NO	NO	NO
B163	Seamless tube	(3)	YES	NO	NO	NO	NO	NO	NO	NO	NO
B464	Seamwelded pipe	(3)	YES	YES	NO	NO	NO	NO	NO	NO	NO
B514	Seamwelded pipe		NO	YES	NO	NO	NO	NO	NO	NO	NO
B517	Seamwelded pipe		NO	YES	NO	NO	NO	NO	NO	NO	NO
B619	Seamwelded pipe		NO	YES	NO	NO	NO	NO	NO	NO	NO
B675	Seamwelded pipe	(3)	YES	YES	NO	NO	NO	NO	NO	NO	NO
B705	Seamwelded pipe		NO	YES	NO	NO	NO	NO	NO	NO	NO
B804	Seamwelded pipe	(3)	YES	YES	NO	NO	NO	NO	NO	NO	NO
B468	Seamwelded tube	(3)	YES	NO	NO	NO	NO	NO	NO	NO	NO
B676	Seamwelded tube	(3)	YES	NO	NO	NO	NO	NO	NO	NO	NO
B160	Fittings	(3)	NO	YES	NO	NO	NO	NO	NO	NO	YES
B164	Fittings	(3)	NO	YES	NO	NO	NO	NO	NO	NO	YES
B166	Fittings	(3)	NO	YES	NO	NO	NO	NO	NO	NO	YES
B366	Fittings	(3)	YES	YES	NO	NO	NO	NO	NO	NO	NO
B462	Fittings	(3)	YES	YES	NO	NO	NO	NO	NO	NO	YES
B564	Fittings	(3)	NO	YES	NO	NO	NO	NO	NO	NO	YES

(1) For materials acceptable for use in ASME I and/or ASME III applications, use ASME specifications (e.g., SB 160) in lieu of ASTM specifications (e.g., B 160). The ASME specifications for nonferrous materials are prefixed by SB, whereas ASTM specifications are prefixed by B.

(2) For limitations or additional requirements on use of these material specifications, refer to the applicable Code.

Note: (3) Refer to code for acceptable grades, class, temper, and/or UNS Number.

TABLE E5.5 Copper and Copper Alloy Pipe, Tube, and Fittings (1), (2)

Mat'l spec	Description	Notes	B31.1	B31.3	B31.4	B31.5	B31.8	B31.9	B31.11	ASME I	ASME III
B42	Seamless pipe	(3)	YES	YES	NO	YES	YES	YES	NO	NO	NO
B43	Seamless pipe		YES	YES	NO	YES	YES	YES	NO	NO	NO
B302	Seamless pipe	(3)	YES	NO	NO	YES	NO	YES	NO	NO	NO
B315	Seamless pipe/tube	(3)	YES	NO	NO	YES	NO	NO	NO	NO	NO
B466	Seamless pipe/tube	(3)	YES	YES	NO	YES	NO	NO	NO	NO	NO
B68	Seamless tube	(3)	YES	YES	NO	YES	YES	YES	NO	NO	NO
B75	Seamless tube	(3)	YES	YES	NO	YES	YES	YES	NO	NO	NO
B88	Seamless tube	(3)	YES	YES	NO	YES	YES	YES	NO	NO	NO
B111	Seamless tube	(3)	YES	NO	NO	YES	NO	NO	NO	NO	NO
B135	Seamless tube		NO	NO	NO	NO	NO	YES	NO	NO	NO
B280	Seamless tube		NO	YES	NO	YES	NO	YES	NO	NO	NO
B467	Seamwelded pipe	(3)	YES	YES	NO	YES	NO	NO	NO	NO	NO
B608	Seamwelded pipe	(3)	YES	NO	NO	NO	NO	NO	NO	NO	NO
B21	Fittings		NO	YES	NO	YES	NO	NO	NO	NO	NO
B98	Fittings	(3)	NO	YES	NO	YES	NO	NO	NO	NO	YES
B133	Fittings		NO	YES	NO	NO	NO	NO	NO	NO	YES
B150	Fittings	(3)	YES	YES	NO	NO	NO	NO	NO	NO	YES

(1) For materials acceptable for use in ASME I and/or ASME III applications, use ASME specifications (e.g., SB 98) in lieu of ASTM specifications (e.g., B 98). The ASME specifications for nonferrous materials are prefixed by SB, whereas ASTM specifications are prefixed by B.

(2) For limitations or additional requirements on use of these material specifications, refer to the applicable Code.

Note: (3) Refer to code for acceptable grades, class, temper, and/or UNS Number.

TABLE E5.6 Aluminum and Aluminum Alloy Pipe, Tube, and Fittings (1), (2)

Mat'l spec	Description	Notes	B31.1	B31.3	B31.4	B31.5	B31.8	B31.9	B31.11	ASME I	ASME III
B210	Seamless tube		YES	YES	NO	YES	NO	YES	NO	NO	NO
B234	Seamless tube		NO	NO	NO	YES	NO	NO	NO	NO	NO
B241	Seamless tube	(3)	YES	YES	NO	YES	NO	YES	NO	NO	NO
B345	Seamless pipe/tube		NO	YES	NO	YES	NO	NO	NO	NO	NO
B247	Fittings	(3)	NO	YES	NO	YES	NO	YES	NO	NO	YES
B361	Fittings		NO	YES	NO	YES	NO	YES	NO	NO	NO

(1) For materials acceptable for use in ASME I and/or ASME III applications, use ASME specifications (e.g., SB 247) in lieu of ASTM specifications (e.g., B 247). The ASME specifications for nonferrous materials are prefixed by SB, whereas ASTM specifications are prefixed by B.

(2) For limitations or additional requirements on use of these material specifications, refer to the applicable Code.

Note: (3) Refer to code for acceptable grades, class, temper, and/or UNS Number.

APPENDIX E6

INTERNATIONAL PIPING MATERIAL SPECIFICATIONS

R. Peter Deubler, P.E.
Technical Director
Shaw Fronek Company
Englewood, NJ

This appendix lists material specifications of different countries. It includes correlating specifications for different piping materials, grades, classes, types, and other categories. Since each country's specifications are unique, no two specifications are identical. The equivalency determination of material produced to one specification to material produced to another specification will vary based upon the criteria utilized. Therefore this table provides only a cross-reference and does not consider which specifications are equivalent.

Click for view of double page spread

TABLE E6.1 International Piping Materials Cross-Reference

American				British			German		
Nominal composition	Spec	Grade	Type or class	BS number	BS grade	Process	DIN type	DIN number	Material number
Carbon steels									
Seamless pipe and tube									
C	A 53	A	S	3601	360		St 35	1629	1.0308
C-Mn	A 53	B	S	3601	430		St 45	1629	1.0408
C-Si	A 106	A		3602	360	HFS	St 35.8	17175	1.0305
C-Si	A 106	B		3602	430	HFS	St 45.8	17175	1.0405
C-Si	A 106	C					17 Mn 4	17175	
C	A 179			3606	320	CFS	St 35.4	1629	1.0309
							St 35.8	17175	1.0305
C-Si	A 192			3059	320		St 45.8	17175	1.0305
C-Si	A 210	A1		3059	320			17175	1.0405
C-Mn-Si	A 210	C					TT St 41N		
C-Mn	A 333	1					TT St 45N		1.0437
C-Mn-Si	A 333	6		3603	410	HFS			1.0456
C-Si	A 369	FPA							
C-Mn	A 369	FPB							
C	API-5L	A		3601	360				
C-Mn	API-5L	B		3601	430				
Furnace butt-welded pipe									
C	A 53		F						
C	API-5L	A25	I & II	1387					
Electric resistance welded pipe & tube									
C	A 53	A	E	3601	320		St 35	1629	
C-Mn	A 53	B	E	3601	410		St 45	1629	
C	A 135	A							
C-Mn	A 135	B							
C	A 178	A		3059	320	ERW	St 37.8	17177	1.0315
C	A 178	C					St 42.8	17177	1.0498
C	A 214			3606	30	ERW	St 37.2	1626	1.0036
C-Si	A 226								
C-Mn	A 333	1					TT St 35N		1.0437
C-Mn-Si	A 333	6		3603	410	HFS	TT St 44N		1.5637
C	API-5L	A25	I & II	1387			St 33	1626	
C	API-5L	A		3601	360		St 34.7	17172	
C-Mn	API-5L	B		3601	410		St 38.7	17172	
C	A 587	C							
Electric fusion welded pipe–filler metal added									
C	A 134	A283A		3602	410	SAW			
C	A 134	A283B							
C	A 134	A283C							
C	A 134	A283D							
C	A 134	A285A							
C	A 134	A285B							
C	A 134	A285C							
C	A 139	A							
C-Mn	A 139	B		3602	410	SAW			
C	API-5L	A		3601	360		St 34.7	17172	
C-Mn	API-5L	B		3601	410		St 38.7	17172	
C	A 211	A570-30							
C	A 211	A570-33							
C	A 211	A570-340							
C-Mn-Si	A 671	CD70							
C-Mn-Si	A 671	CD80							
C	A 672	A45					HI	1626	
C	A 672	A50					HI	1626	

Belgian		French		Italian		Japanese	
NBN type	NBN number	AFNOR type	NF number	UNI type	UNI number	JIS symbol	JIS number
E 37.2	630			Fe 35-1	663	STPG 370	G3454
E 42.2	630					STPG 410	G3454
D 37.2	629	TU 37C	A49-213	C 14	5462	STPT 370	G3456
D 42.2	629	TU 42C	A49-213	C 18	5462	STPT 410	G3456
						STPT 480	G3456
D 37.2	629	TU 37C	A49-215	C 14	5462	STB 340	G3461
D45	837	TU 37C	A49-213	C 14	5462	STB 340	G3461
D45	837	TU 42C	A49-213	C 18	5462	STB 410	G3461
		TU 42 BT	A49-230	C 15	5949	STPL 380	G3460
		TU 42 BT	A49-230	C 20	5949	STPL 690	G3460
						STB 340	G3461
						STB 410	G3461
D37.1	629	TS 34e	A49-245			STB 340	G3461
		TU 42 BT	A49-230	C 15	5949	STPL 380	G3460
		TU 42 BT	A49-230	C 20	5949	STPL 690	G3460
						STPY 400	G3457
						STPY 400	G3457
						STPY 400	G3457
						STPY 400	G3457
						STPY 400	G3457
						STPY 400	G3457
						STPY 400	G3457

Click for view of double page spread

TABLE E6.1 International Piping Materials Cross-Reference (*Continued*)

American				British			German		
Nominal composition	Spec	Grade	Type or class	BS number	BS grade	Process	DIN type	DIN number	Material number
C	A 672	A55					HI	1626	
C	A 672	B55							
C	A 672	B60							
C	A 672	B65					HI II	1626	
C	A 672	B70					17Mn 4	1626	
C	A 672	C55							
C	A 672	C60							
C	A 672	C65							
C	A 672	C70							
C-Mn-Si	A 672	D70							
C-Mn-Si	A 672	D80							
C-Mn-Si	A 672	N75							
C-Mn-Si	A 691	CMSH70							
C-Mn-Si	A 691	CMSH80							
C-Mn-Si	A 691	CMS75							
Low & intermediate alloy steels									
Seamless pipe and tube									
5Cr-½Mo	A 199	T5		3606	625	CFS	12 Cr Mo 19 5		1.7362
9Cr-1Mo	A 199	T9							
1¼Cr-½Mo	A 199	T11		3606	621	CFS	13 Cr Mo 44	17175	1.7335
3Cr-1Mo	A 199	T21							
2¼Cr-1Mo	A 199	T22		3606	622	CFS	10 Cr Mo 9 10	17175	1.7380
½Cr-½Mo	A 213	T2							
2Cr-½Mo	A 213	T3b							
5Cr-½Mo	A 213	T5		3606	625		12 Cr Mo 19 5		1.7362
5Cr-½Mo-1½Si	A 213	T5b							
5Cr-½Mo-Ti	A 213	T5c							
9Cr-1Mo	A 213	T9							
1¼Cr-½Mo	A 213	T11		3606	621		13 Cr Mo 44	17175	1.7335
1Cr-½Mo	A 213	T12		3606	620		13 Cr Mo 44	17175	1.7335
3Cr-1Mo	A 213	T21							
2¼Cr-1Mo	A 213	T22		3606	622		10 Cr Mo 9 10	17175	1.7380
9Cr-1Mo-V	A 213	T91							
3½Ni	A 333	3		3603	503	HFS	10 Ni 14		1.5637
Ni-Cr-Cu-Al	A 333	4							
2½Ni	A 333	7							
2Ni-1Cu	A 333	9							
C-½Mo	A 335	P1					16 Mo 5		1.5423
½Cr-½Mo	A 335	P2							
5Cr-½Mo	A 335	P5		3604	625	HFS	12 Cr Mo 19 5		1.7362
5Cr-½Mo-1½Si	A 335	P5b							
5Cr-½Mo-Ti	A 335	P5c							
9Cr-1Mo	A 335	P9			629	HFS			
1¼Cr-½Mo-Si	A 335	P11		3604	621	HFS	13 Cr Mo 44	17175	1.7335
1Cr-½Mo	A 335	P12		3604	620	HFS	13 Cr Mo 44	17175	1.7335
3Cr-1Mo	A 335	P21							
2¼Cr-1Mo	A 335	P22		3604	622	HFS	10 Cr Mo 9 10	17175	1.7380
9Cr-1Mo-V	A 335	P91							
C-½Mo	A 369	FP1							
½Cr-½Mo	A 369	FP2							
2Cr-½Mo	A 369	FP3b							
5Cr-½Mo	A 369	FP5							
9Cr-1Mo	A 369	FP9							
1¼Cr-½Mo-Si	A 369	FP11							
1Cr-½Mo	A 369	FP12							
3Cr-1Mo	A 369	FP21							
2¼Cr-1Mo	A 369	FP22							
2Ni-1Cu	A 714	V							

Belgian		French		Italian		Japanese	
NBN type	NBN number	AFNOR type	NF number	UNI type	UNI number	JIS symbol	JIS number
X 12 Cr Mo 5	837	Z 12 CD 5.05				STBA25	G3462
						STBA26	G3462
		10 CD 5.05				STBA23	G3462
10 CrMo 9 10	837	10 CD 9.10		12 Cr Mo 9 10	5462	STBA24	G3462
						STBA20	G3462
		TU Z 12 CD 5.05	A49-213			STBA25	G3462
						STBA26	G3462
		TU 10 CD 5.05				STBA23	G3462
						STBA22	G3462
		TU 10 CD 9.10		12 Cr Mo 9 10	5462	STBA24	G3462
		TU 16 N 14	A49-230	18 Ni 14	5949	STPL450	G3460
		TU 15 D 3	A49-213	16 Mo 5	5462	STPA12	G3458
						STPA20	G3458
		TU Z 12 CD 5.05	A49-213			STPA25	G3458
		TU Z 10 CD 9	A49-213			STPA26	G3458
		TU 10 CD 5.05	A49-213			STPA23	G3458
				14 Cr Mo 3	5462	STPA22	G3458
		TU 10 CD 9.10	A49-213	12 Cr Mo 910	5462	STPA24	G3458

Click for view of double page spread

TABLE E6.1 International Piping Materials Cross-Reference (*Continued*)

American				British			German		
Nominal composition	Spec	Grade	Type or class	BS number	BS grade	Process	DIN type	DIN number	Material number
Centrifugally cast pipe									
C-½Mo	A 426	CP1							
½Cr-½Mo	A 426	CP2							
5Cr-½Mo	A 426	CP5							
5Cr-½Mo-Si	A 426	CP5B							
9Cr-1Mo	A 426	CP9							
1¼Cr-½Mo	A 426	CP11							
1Cr-½Mo	A 426	CP12					GS-17 CrMo55	17245	1.7357
3Cr-1Mo	A 426	CP21							
2¼Cr-1Mo	A 426	CP22					CS-18 CrMo9.10		1.7379
Electric resistance welded pipe									
3½Ni	A333	3		3603	503	HFS	10 Ni 14		1.5637
2½Ni	A333	7							
2Ni	A333	9							
2Ni-Cu	A714	V	E						
Electric fusion welded pipe-filler metal added									
C-½Mo	A 672	L65	20,23,30,33,40,43						
C-½Mo	A 672	L70	20,23,30,33,40,43						
C-½Mo	A 672	L75	20,23,30,33,40,43						
C-½Mo	A 691	CM65	20,23,30,33,40,43						
C-½Mo	A 691	CM70	20,23,30,33,40,43						
C-½Mo	A 691	CM75	20,23,30,33,40,43						
½Cr-½Mo	A 691	½Cr	20,23						
1Cr-½Mo	A 691	1Cr	20,23						
1¼Cr-½Mo-Si	A 691	1¼Cr	20,23						
2¼Cr-1Mo	A 691	2¼Cr	20,23						
3Cr-1Mo	A 691	3Cr	20,23						
5Cr-½Mo	A 691	5Cr	20,23						
Stainless Steels									
Seamless pipe and tube									
Austenitic									
18Cr-8Ni	A 213	TP304		3606	304S25		X 5 CrNi 18 9	17440	1.4301
18Cr-8Ni	A 213	TP304H							
18Cr-8Ni	A 213	TP304L		3606	304S22		X 2 CrNi 18 9	17440	1.4306
18Cr-8Ni-N	A 213	TP304N							
23Cr-12Ni	A 213	TP309H							
25Cr-20Ni	A 213	TP310H							
16Cr-12Ni-2Mo	A 213	TP316		3606	316S30		X 5 CrNiMo 18 10	17440	1.4401
16Cr-12Ni-2Mo	A 213	TP316H							
16Cr-12Ni-2Mo	A 213	TP316L		3606	316S29		X 2 CrNiMo 18 10	17440	1.4404
16Cr-12Ni-2Mo-N	A 213	TP316N							
18Cr-10Ni-Ti	A 213	TP321		3606	321S22		X 10 CrNiTi 18 9	17440	1.4541
18Cr-10Ni-Ti	A 213	TP321H							
18Cr-10Ni-Cb	A 213	TP347		3606	347S17		X 10 CrNiNb 18 9	17440	1.4550
18Cr-10Ni-Cb	A 213	TP347H							
18Cr-10Ni-Cb	A 213	TP348							
18Cr-10Ni-Cb	A 213	TP348H							
18Cr-8Ni	A 312	TP304		3605	316S18		X 5 CrNi 18 9	17440	1.4301
18Cr-8Ni	A 312	TP304H		3605	316S59				
18Cr-8Ni	A 312	TP304L		3605	316S14		X 2 CrNi 18 9	17440	1.4306
18Cr-8Ni-N	A 312	TP304N							
23Cr-12Ni	A 312	TP309H							
25Cr-20Ni	A 312	TP310H							

Belgian		French		Italian		Japanese	
NBN type	NBN number	AFNOR type	NF number	UNI type	UNI number	JIS symbol	JIS number
						SCPH-11CF	G5202
						SCPH-21CF	G5202
						SCPH-32CF	G5202
		TU 16 N 14	A49-230	18 Ni 14	5949	STPL450	G3460
		Z 6 CN 18-09	A49-218	X 5 Cr Ni 18 10	6904	SUS304TB	G3463
						SUS304HTB	G3463
		Z 2 CN 18-09	A49-218	X 2 Cr Ni 18 11	6904	SUS304LTB	G3463
		Z 6 CND 17-12	A49-218	X 5 Cr Ni Mo 17 12	6904	SUS316TB	G3463
						SUS316HTB	G3463
		Z 2 CND 17-13	A49-218	X 2 Cr Ni Mo 17 12	6904	SUS316LTB	G3463
		Z 6 CNT 18-11	A49-218	X 6 Cr Ni Ti 18 11	6904	SUS321TB	G3463
		Z 6 CNNb 18-11	A49-218	X 6 Cr Ni Nb 18 11	6904	SUS347TB	G3463
						SUS347HTB	G3463
		TU Z 6 CN 19-10	A49-230	X 5 Cr Ni 18 10	6904	SUS304TP	G3459
		TU Z 6 CN 19-10	A49-214	X 8 Cr Ni 19 10	6904	SUS304HTP	G3459
		TU Z 2 CN 19-11	A49-230	X 2 Cr Ni 18 11	6904	SUS304LTP	G3459

Click for view of double page spread

TABLE E6.1 International Piping Materials Cross-Reference (*Continued*)

American				British			German		
Nominal composition	Spec	Grade	Type or class	BS number	BS grade	Process	DIN type	DIN number	Material number
16Cr-12Ni-2Mo	A 312	TP316		3605	316S18		X 5 CrNiMo 18 10	17440	1.4401
16Cr-12Ni-2Mo	A 312	TP316H		3605	316S59				
16Cr-12Ni-2Mo	A 312	TP316L		3605	316S14		X 2 CrNiMo 18 10	17440	1.4404
16Cr-12Ni-2Mo-N	A 312	TP316N							
18Cr-13Ni-3Mo	A 312	TP317							
18Cr-10Ni-Ti	A 312	TP321		3605	321S18		X 10 CrNiTi 18 9	17440	1.4541
18Cr-10Ni-Ti	A 312	TP321H							
18Cr-10Ni-Cb	A 312	TP347		3605	347S18		X 10 CrNiNb 18 9		1.4543
18Cr-10Ni-Cb	A 312	TP347H							
18Cr-10Ni-Cb	A 312	TP348							
18Cr-10Ni-Cb	A 312	TP348H							
18Cr-18Ni-2Si	A 312	TPXM15							
22Cr-13Ni-5Mn	A 312	TPXM19							
20Cr-18Ni-6Mo	A 312	. . .							
18Cr-8Ni	A 376	TP304							
18Cr-8Ni	A 376	TP304H							
18Cr-8Ni-N	A 376	TP304N							
16Cr-12Ni-2Mo	A 376	TP316							
16Cr-12Ni-2Mo	A 376	TP316H							
16Cr-12Ni-2Mo-N	A 376	TP316N							
18Cr-10Ni-Ti	A 376	TP321							
18Cr-10Ni-Ti	A 376	TP321H							
18Cr-10Ni-Cb	A 376	TP347							
18Cr-10Ni-Cb	A 376	TP347H							
18Cr-10Ni-Cb	A 376	TP348							
18Cr-8Ni	A 430	FP304							
18Cr-8Ni	A 430	FP304H							
18Cr-8Ni-N	A 430	FP304N							
16Cr-12Ni-2Mo	A 430	FP316							
16Cr-12Ni-2Mo	A 430	FP316H							
16Cr-12Ni-2Mo-N	A 430	FP316N							
18Cr-10Ni-Ti	A 430	FP321							
18Cr-10Ni-Ti	A 430	FP321H							
18Cr-10Ni-Cb	A 430	FP347							
18Cr-10Ni-Cb	A 430	FP347H							
Ferritic/martensitic									
12Cr-Al	A 268	TP405					X 7 CrAl	17440	1.4002
13Cr	A 268	TP410					X 10 Cr 13	17440	1.4006
15Cr	A 268	TP429							
17Cr	A 268	TP430							
26Cr-1Mo	A 268	TPXM27							
27Cr	A 268	TP446-1							
27Cr-1Mo-Ti	A 268	TPXM33							
27Cr-1Mo	A 731	TPXM27							
27Cr-1Mo-Ti	A 731	TPXM33							
Centrifugally cast pipe									
Austenitic									
18Cr-8Ni	A 451	CPF8		4534			G-X 6 CrNi 18 9	17445	1.4308
18Cr-10Ni-Cb	A 451	CPF8C					G-X 7 CrNiNb 18 9	17445	1.4552
18Cr-9Ni-2Mo	A 451	CPF8M		4534			G-X 6 CrNiMo 18 9	17445	1.4408
25Cr-12Ni	A 451	CPH8							
25Cr-12Ni	A 451	CPH10							
25Cr-12Ni	A 451	CPH20							
25Cr-20Ni	A 451	CPK20		4534			G-X 15 CrNi 25 20		1.4840
18Cr-8Ni	A 452	TP304H							
16Cr-12Ni-2Mo	A 452	TP316H							
18Cr-10Ni-Cb	A 452	TP347H							

Belgian		French		Italian		Japanese	
NBN type	NBN number	AFNOR type	NF number	UNI type	UNI number	JIS symbol	JIS number
		Z 6 CND 17-11	A35-573	X 5 Cr Ni Mo 17 12	6904	SUS316TP	G3459
		TU Z 6 CND 17-12	A49-230	X 8 Cr Ni Nb 17 12	6904	SUS316HTP	G3459
		TU Z 2 CND 17-12	A49-230	X 2 Cr Ni Nb 17 12	6904	SUS316LTP	G3459
		Z 6 CNT 18-11	A49-230	X 6 Cr Ni Ti 18 11	6904	SUS321TP	G3459
						SUS321HTP	G3459
		Z 6 CNNb 18-11	A35-573	X 6 Cr Ni Nb 18 11	6904	SUS347TP	G3459
				X 6 Cr Ni Nb 18 11	6904	SUS347HTP	G3459
						SUS405TB	G3463

Click for view of double page spread

TABLE E6.1 International Piping Materials Cross-Reference (*Continued*)

American				British			German		
Nominal composition	Spec	Grade	Type or class	BS number	BS grade	Process	DIN type	DIN number	Material number
Welded pipe and tube- Without filler metal Austenitic									
18Cr-8Ni	A 249	TP304							
18Cr-8Ni	A 249	TP304H							
18Cr-8Ni	A 249	TP304L							
18Cr-8Ni-N	A 249	TO304N							
23Cr-12Ni	A 249	TP309H							
16Cr-12Ni-2Mo	A 249	TP316							
16Cr-12Ni-2Mo	A 249	TP316H							
16Cr-12Ni-2Mo	A 249	TP316L							
16Cr-12Ni-2Mo-N	A 249	TP316N							
19Cr-13Ni-3Mo	A 249	TP317							
18Cr-10Ni-Ti	A 249	TP321							
18Cr-10Ni-Ti	A 249	TP321H							
18Cr-10Ni-Cb	A 249	TP347							
18Cr-10Ni-Cb	A 249	TP347H							
18Cr-10Ni-Cb	A 249	TP348							
18Cr-10Ni-Cb	A 249	TP348H							
20Cr-18Ni-6Mo	A 249	. . .							
18Cr-8Ni	A 312	TP304		3605	304S18		X 5 CrNi 18 9	17440	1.4301
18Cr-8Ni	A 312	TP304H		3605	394S59				
18Cr-8Ni	A 312	TP304L		3605	304S14		X 2 CrNi 18 9	17440	1.4306
18Cr-8Ni-N	A 312	TP304N							
23Cr-12Ni	A 312	TP309H							
25Cr-20Ni	A 312	TP310H							
16Cr-12Ni-2Mo	A 312	TP316		3605	316S18		X 5 CrNiMo 18 10	17440	1.4401
16Cr-12Ni-2Mo	A 312	TP316H		3605	316S59				
16Cr-12Ni-2Mo	A 312	TP316L		3605	316S14		X 2 CrNiMo 18 10	17440	1.4404
16Cr-12Ni-2Mo-N	A 312	TP316N							
19Cr-13Ni-3Mo	A 312	TP317							
18Cr-10Ni-Ti	A 312	TP321		3605	321S18		X 10 CrNiTi 18 9	17440	1.4541
18Cr-10Ni-Ti	A 312	TP321H							
18Cr-10Ni-Cb	A 312	TP347		3605	347S18		X 10 CrNiNb 18 9		1.4543
18Cr-10Ni-Cb	A 312	TP347H							
18Cr-10Ni-Cb	A 312	TP348							
18Cr-10Ni-Cb	A 312	TP348H							
18Cr-18Ni-2Si	A 312	TPXM15							
20Cr-18Ni-6Mo	A 312	. . .							
Ferritic/Martensitic									
12Cr-Al	A 268	TP405					X 7 CrAl	17440	1.4002
13Cr	A 268	TP410					X 10 Cr 13	17440	1.4006
15Cr	A 268	TP429							
17Cr	A 268	TP430							
27Cr	A 268	TP446-1							
26Cr-1Mo	A 268	TPXM27							
27Cr-1Mo-Ti	A 268	TPXM33							
27Cr-1Mo	A 731	TPXM27							
27Cr-1Mo-Ti	A 731	TPXM33							
Welded pipe-filler metal Added austenitic									
18Cr-8Ni	A 358	304	1	3605	304S25		X 5 CrNi 18 9	17440	1.4301
18Cr-8Ni	A 358	304	2	3605	304S25		X 5 CrNi 18 9	17440	1.4301
18Cr-8Ni	A 358	304	3	3605	304S25		X 5 CrNi 18 9	17440	1.4301
18Cr-8Ni	A 358	304L	1						
18Cr-8Ni	A 358	304L	2						
18Cr-8Ni	A 358	304L	3						

Belgian		French		Italian		Japanese	
NBN type	NBN number	AFNOR type	NF number	UNI type	UNI number	JIS symbol	JIS number
		TU Z 6 CN 19-10	A49-230	X 5 Cr Ni 18 10	6904	SUS304TP	G3459
		TU Z 6 CN 19-10	A49-214	X 8 Cr Ni 19 10	6904	SUS304HTP	G3459
		TU Z 2 CN 19-11	A49-230	X 2 Cr Ni 18 11	6904	SUS304LTP	G3459
		Z 6 CND 17-11	A35-573	X 5 Cr Ni Mo 17 12	6904	SUS316TP	G3459
		TU Z 6 CND 17-12	A49-230	X 8 Cr Ni Nb 17 12	6904	SUS316HTP	G3459
		TU Z 2 CND 17-12	A49-230	X 2 Cr Ni Nb 17 12	6904	SUS316LTP	G3459
		Z 6 CNT 18-11	A49-230	X 6 Cr Ni Ti 18 11	6904	SUS321TP	G3459
						SUS321HTP	G3459
		Z 6 CNNb 18-11	A35-573	X 6 Cr Ni Nb 18 11	6904	SUS347TP	G3459
				X 6 Cr Ni Nb 18 11	6904	SUS347HTP	G3459
						SUS405TB	G3463
		Z 6 CN 18.09	A36-209	X 6 Cr Ni 18 10	8317	SUS304 TPY	G3468
		Z 6 CN 18.09	A36-209	X 6 Cr Ni 18 10	8317	SUS304 TPY	G3468
		Z 6 CN 18.09	A36-209	X 6 Cr Ni 18 10	8317	SUS304 TPY	G3468

Click for view of double page spread

TABLE E6.1 International Piping Materials Cross-Reference (*Continued*)

American				British			German		
Nominal composition	Spec	Grade	Type or class	BS number	BS grade	Process	DIN type	DIN number	Material number
18Cr-8Ni-N	A 358	304N	1						
18Cr-8Ni-N	A 358	304N	2						
18Cr-8Ni-N	A 358	304N	3						
23Cr-12Ni	A 358	309	1						
23Cr-12Ni	A 358	309	2						
23Cr-12Ni	A 358	309	3						
25Cr-20Ni	A 358	310	1				X 12 CrNi 25 21		1.4845
25Cr-20Ni	A 358	310	2				X 12 CrNi 25 21		1.4845
25Cr-20Ni	A 358	310	3				X 12 CrNi 25 21		1.4845
16Cr-12Ni-2Mo	A 358	316	1	3605	316S26		X 5 CrNiMo 18 10	17440	1.4401
16Cr-12Ni-2Mo	A 358	316	2	3605	316S26		X 5 CrNiMo 18 10	17440	1.4401
16Cr-12Ni-2Mo	A 358	316	3	3605	316S26		X 5 CrNiMo 18 10	17440	1.4401
16Cr-12Ni-2Mo	A 358	316L	1						
16Cr-12Ni-2Mo	A 358	316L	2						
16Cr-12Ni-2Mo	A 358	316L	3						
16Cr-12Ni-2Mo-N	A 358	316N	1						
16Cr-12Ni-2Mo-N	A 358	316N	2						
16Cr-12Ni-2Mo-N	A 358	316N	3						
18Cr-10Ni-Ti	A 358	321	1	3605	321S22		X 10 CrNiTi 18 9	17440	1.4541
18Cr-10Ni-Ti	A 358	321	2	3605	321S22		X 10 CrNiTi 18 9	17440	1.4541
18Cr-10Ni-Ti	A 358	321	3	3605	321S22		X 10 CrNiTi 18 9	17440	1.4541
18Cr-10Ni-Cb	A 358	347	1	3605	347S17		X 10 CrNiNb 18 9	17440	1.4550
18Cr-10Ni-Cb	A 358	347	2	3605	347S17		X 10 CrNiNb 18 9	17440	1.4550
18Cr-10Ni-Cb	A 358	347	3	3605	347S17		X 10 CrNiNb 18 9	17440	1.4550
18Cr-10Ni-Cb	A 358	348	1						
18Cr-10Ni-Cb	A 358	348	2						
18Cr-10Ni-Cb	A 358	348	3						
20Cr-18Ni-6Mo	A 358	. . .	1						
20Cr-18Ni-6Mo	A 358	. . .	2						
20Cr-18Ni-6Mo	A 358	. . .	3						

Belgian		French		Italian		Japanese	
NBN type	NBN number	AFNOR type	NF number	UNI type	UNI number	JIS symbol	JIS number
			A36-209	X 22 Cr Ni 25 20	5900	SUS310S TPY	G3468
			A36-209	X 22 Cr Ni 25 20	5900	SUS310S TPY	G3468
			A36-209	X 22 Cr Ni 25 20	5900	SUS310S TPY	G3468
		Z 6 CND 17.11	A36-209	X 6 Cr Ni Mo 17 12 2	8317	SUS316 TPY	G3468
		Z 6 CND 17.11	A36-209	X 6 Cr Ni Mo 17 12 2	8317	SUS316 TPY	G3468
		Z 6 CND 17.11	A36-209	X 6 Cr Ni Mo 17 12 2	8317	SUS316 TPY	G3468
		Z 6 CNT 18.10	A36-209	X 6 Cr Ni Ti 18 10	8317	SUS321 TPY	G3468
		Z 6 CNT 18.10	A36-209	X 6 Cr Ni Ti 18 10	8317	SUS321 TPY	G3468
		Z 6 CNT 18.10	A36-209	X 6 Cr Ni Ti 18 10	8317	SUS321 TPY	G3468
		Z 6 CnNb 18.10	A36-209	X 6 Cr Ni Nb 18 10	8317	SUS347 TPY	G3468
		Z 6 CnNb 18.10	A36-209	X 6 Cr Ni Nb 18 10	8317	SUS347 TPY	G3468
		Z 6 CnNb 18.10	A36-209	X 6 Cr Ni Nb 18 10	8317	SUS347 TPY	G3468

APPENDIX E7

MISCELLANEOUS FLUIDS AND THEIR PROPERTIES

Akhil Prakash, P.E.
Senior Engineer
Wolf Creek Nuclear Operating Corporation
Burlington, Kansas

TABLE E7.1 Physical Properties of Water

Temperature of water t degrees Fahrenheit	Saturation pressure P' pounds per square inch absolute	Specific volume $\overline{V}$ cubic feet per pound	Weight density ρ pounds per cubic foot	Weight pounds per gallon
32	0.08859	0.016022	62.414	8.3436
40	0.12163	0.016019	62.426	8.3451
50	0.17796	0.016023	62.410	8.3430
60	0.25611	0.016033	62.371	8.3378
70	0.36292	0.016050	62.305	8.3290
80	0.50683	0.016072	62.220	8.3176
90	0.69813	0.016099	62.116	8.3037
100	0.94924	0.016130	61.996	8.2877
110	1.2750	0.016165	61.862	8.2698
120	1.6927	0.016204	61.7132	8.2498
130	2.2230	0.016247	61.550	8.2280
140	2.8892	0.016293	61.376	8.2048
150	3.7184	0.016343	61.188	8.1797
160	4.7414	0.016395	60.994	8.1537
170	5.9926	0.016451	60.787	8.1260
180	7.5110	0.016510	60.569	8.0969
190	9.340	0.016572	60.343	8.0667
200	11.526	0.016637	60.107	8.0351
210	14.123	0.016705	59.862	8.0024
212	14.696	0.016719	59.812	7.9957
220	17.186	0.016775	59.613	7.9690
240	24.968	0.016926	59.081	7.8979
260	35.427	0.017089	58.517	7.8226
280	49.200	0.017264	57.924	7.7433
300	67.005	0.01745	57.307	7.6608
350	134.604	0.01799	55.586	7.4308
400	247.259	0.01864	53.648	7.1717
450	422.55	0.01943	51.467	6.8801
500	680.86	0.02043	48.948	6.5433
550	1045.43	0.02176	45.956	6.1434
600	1543.2	0.02364	42.301	5.6548
650	2208.4	0.02674	37.397	4.9993
700	3094.3	0.03662	27.307	3.6505

Specific gravity of water at 60°F = 1.00.

Weight per gallon is based on 7.48052 gallons per cubic foot.

Source: All data on volume and pressure are abstracted from ASME Steam Tables (1967), with permission of publisher, The American Society of Mechanical Engineers, New York, N.Y.

Reproduced from Technical Paper No. 410–1980, with permission from Crane Co., 3210 Walnut Ave., Long Beach, CA.

TABLE E7.2 Viscosity of Steam and Water

Temp. °F	Viscosity of steam and water—in centipoise (μ)														
	1 psia	2 psia	5 psia	10 psia	20 psia	50 psia	100 psia	200 psia	500 psia	1000 psia	2000 psia	5000 psia	7500 psia	10000 psia	12000 psia
Sat. water	.667	.524	.388	.313	.255	.197	.164	.138	.111	.094	.078	...	...	...	...
Sat. steam	.010	.010	.011	.012	.012	.013	.014	.015	.017	.019	.023	...	...	...	...
1500	.041	.041	.041	.041	.041	.041	.041	.041	.042	.042	.042	.044	.046	.048	.050
1450	.040	.040	.040	.040	.040	.040	.040	.040	.040	.041	.041	.043	.045	.047	.049
1400	.039	.039	.039	.039	.039	.039	.039	.039	.039	.040	.040	.042	.044	.047	.049
1350	.038	.038	.038	.038	.038	.038	.038	.038	.038	.038	.039	.041	.044	.046	.049
1300	.037	.037	.037	.037	.037	.037	.037	.037	.037	.037	.038	.040	.043	.045	.048
1250	.035	.035	.035	.035	.035	.035	.035	.036	.036	.036	.037	.039	.042	.045	.048
1200	.034	.034	.034	.034	.034	.034	.034	.034	.035	.035	.036	.038	.041	.045	.048
1150	.034	.034	.034	.034	.034	.034	.034	.034	.034	.034	.034	.037	.041	.045	.049
1100	.032	.032	.032	.032	.032	.032	.032	.032	.033	.033	.034	.037	.040	.045	.050
1050	.031	.031	.031	.031	.031	.031	.031	.031	.032	.032	.033	.036	.040	.047	.052
1000	.030	.030	.030	.030	.030	.030	.030	.030	.030	.031	.032	.035	.041	.049	.055
950	.029	.029	.029	.029	.029	.029	.029	.029	.029	.030	.031	.035	.042	.052	.059
900	.028	.028	.028	.028	.028	.028	.028	.028	.028	.028	.029	.035	.045	.057	.064
850	.026	.026	.026	.026	.026	.026	.027	.027	.027	.027	.028	.035	.052	.064	.070
800	.025	.025	.025	.025	.025	.025	.025	.025	.026	.026	.027	.040	.062	.071	.075
750	.024	.024	.024	.024	.024	.024	.024	.024	.025	.025	.026	.057	.071	.078	.081
700	.023	.023	.023	.023	.023	.023	.023	.023	.023	.024	.026⊙	.071	.079	.085	.086
650	.022	.022	.022	.022	.022	.022	.022	.022	.023	.023	.023	.082	.088	.092	.096
600	.021	.021	.021	.021	.021	.021	.021	.021	.021	.021	.087	.091	.096	.101	.104
550	.020	.020	.020	.020	.020	.020	.020	.020	.020	.019	.095	.101	.105	.109	.113

Values directly below underscored viscosities are for water.

⊙ Critical point.

TABLE E7.2 Viscosity of Steam and Water *(Continued)*

Temp. °F	Viscosity of steam and water—in centipoise (μ)														
	1 psia	2 psia	5 psia	10 psia	20 psia	50 psia	100 psia	200 psia	500 psia	1000 psia	2000 psia	5000 psia	7500 psia	10000 psia	12000 psia
500	.019	.019	.019	.019	.019	.019	.019	.018	.018	.103	.105	.111	.114	.119	.122
450	.018	.018	.018	.018	.017	.017	.017	.017	.115	.116	.118	.123	.127	.131	.135
400	.016	.016	.016	.016	.016	.016	.016	.016	.131	.132	.134	.138	.143	.147	.150
350	.015	.015	.015	.015	.015	.015	.015	.152	.153	.154	.155	.160	.164	.168	.171
300	.014	.014	.014	.014	.014	.014	.182	.183	.183	.184	.185	.190	.194	.198	.201
250	.013	.013	.013	.013	.013	.228	.228	.228	.228	.229	.231	.235	.238	.242	.245
200	.012	.012	.012	.012	.300	.300	.300	.300	.301	.301	.303	.306	.310	.313	.316
150	.011	.011	.427	.427	.427	.427	.427	.427	.427	.428	.429	.431	.434	.437	.439
100	.680	.680	.680	.680	.680	.680	.680	.680	.680	.680	.680	.681	.682	.683	.683
50	1.299	1.299	1.299	1.299	1.299	1.299	1.299	1.299	1.299	1.298	1.296	1.289	1.284	1.279	1.275
32	1.753	1.753	1.753	1.753	1.753	1.753	1.753	1.752	1.751	1.749	1.745	1.733	1.723	1.713	1.705

Values directly below underscored viscosities are for water.

Source: Reproduced from Technical Paper No. 410–1980, with permission from Crane Co., 3210 Walnut Ave., Long Beach, CA.

TABLE E7.3 Physical Properties of Gases

(Approximate values at 68°F and 14.7 psia) c_p = specific heat at constant pressure; c_v = specific heat at constant volume.

Name of gas	Chemical formula or symbol	Approx. molecular weight M	Weight density, pounds per cubic foot ρ	Specific gravity relative to air S_g	Individual gas constant R	Specific heat at room temperature Btu/lb °F		Heat capacity per cubic foot		k equal to c_p/c_v
						c_p	c_v	c_p	c_v	
Acetylene (ethyne)	C_2H_2	26.0	.0682	0.907	59.4	0.350	0.269	.0239	.0184	1.30
Air	—	29.0	.0752	1.000	53.3	0.241	0.172	.0181	.0129	1.40
Ammonia	NH_3	17.0	.0448	0.596	91.0	0.523	0.396	.0234	.0178	1.32
Argon	A	39.9	.1037	1.379	38.7	0.124	0.074	.0129	.0077	1.67
Butane	C_4H_{10}	58.1	.1554	2.067	26.5	0.395	0.356	.0614	.0553	1.11
Carbon dioxide	CO_2	44.0	.1150	1.529	35.1	0.205	0.158	.0236	.0181	1.30
Carbon monoxide	CO	28.0	.0727	0.967	55.2	0.243	0.173	.0177	.0126	1.40
Chlorine	Cl_2	70.9	.1869	2.486	21.8	0.115	0.086	.0215	.0162	1.33
Ethane	C_2H_6	30.0	.0789	1.049	51.5	0.386	0.316	.0305	.0250	1.22
Ethylene	C_2H_4	28.0	.0733	0.975	55.1	0.400	0.329	.0293	.0240	1.22
Helium	He	4.0	.01039	0.1381	386.3	1.250	0.754	.0130	.0078	1.66
Hydrogen chloride	HCl	36.5	.0954	1.268	42.4	0.191	0.135	.0182	.0129	1.41
Hydrogen	H_2	2.0	.00523	0.0695	766.8	3.420	2.426	.0179	.0127	1.41
Hydrogen sulfide	H_2S	34.1	.0895	1.190	45.2	0.243	0.187	.0217	.0167	1.30
Methane	CH_4	16.0	.0417	0.554	96.4	0.593	0.449	.0247	.0187	1.32
Methyl chloride	CH_3Cl	50.5	.1342	1.785	30.6	0.240	0.200	.0322	.0268	1.20
Natural gas	—	19.5	.0502	0.667	79.1	0.560	0.441	.0281	.0221	1.27
Nitric oxide	NO	30.0	.0780	1.037	51.5	0.231	0.165	.0180	.0129	1.40
Nitrogen	N_2	28.0	.0727	0.967	55.2	0.247	0.176	.0180	.0127	1.41
Nitrous oxide	N_2O	44.0	.1151	1.530	35.1	0.221	0.169	.0254	.0194	1.31
Oxygen	O_2	32.0	.0831	1.105	48.3	0.217	0.155	.0180	.0129	1.40
Propane	C_3H_8	44.1	.1175	1.562	35.0	0.393	0.342	.0462	.0402	1.15
Propene (propylene)	C_3H_6	42.1	.1091	1.451	36.8	0.358	0.314	.0391	.0343	1.14
Sulfur dioxide	SO_2	64.1	.1703	2.264	24.0	0.154	0.122	.0262	.0208	1.26

Molecular weight, specific gravity, individual gas constant, and specific heat values were abstracted from, or based on, data in Table 24 of Mark's *Standard Handbook for Mechanical Engineers* (seventh edition).

Weight density values were obtained by multiplying density of air by specific gravity of gas. For values at 60°F, multiply by 1.0154.

Natural gas values are representative only. Exact characteristics require knowledge of specific constituents.

Source: Reproduced from Technical Paper No. 410–1980, with permission from Crane Co., 3210 Walnut Ave., Long Beach, CA.

TABLE E7.4 Weight Density of Air

Air temp. deg F	Weight density of air, in pounds per cubic foot for gauge pressures indicated (Based on an atmospheric pressure of 14.696 and a molecular weight of 28.97)																
	0 psi	5 psi	10 psi	20 psi	30 psi	40 psi	50 psi	60 psi	70 psi	80 psi	90 psi	100 psi	110 psi	120 psi	130 psi	140 psi	150 psi
30	.0811	.1087	.1363	.1915	.247	.302	.357	.412	.467	.522	.578	.633	.688	.743	.798	.853	.909
40	.0795	.1065	.1335	.1876	.242	.295	.350	.404	.458	.512	.566	.620	.674	.728	.782	.836	.890
50	.0782	.1048	.1314	.1846	.238	.291	.344	.397	.451	.504	.557	.610	.663	.717	.770	.823	.876
60	.0764	.1024	.1284	.1804	.232	.284	.336	.388	.440	.492	.544	.596	.648	.700	.752	.804	.856
70	.0750	.1005	.1260	.1770	.228	.279	.330	.381	.432	.483	.534	.585	.636	.687	.738	.789	.840
80	.0736	.0986	.1236	.1737	.224	.274	.324	.374	.424	.474	.524	.574	.624	.674	.724	.774	.824
90	.0722	.0968	.1214	.1705	.220	.269	.318	.367	.416	.465	.515	.564	.613	.662	.711	.760	.809
100	.0709	.0951	.1192	.1675	.216	.264	.312	.361	.409	.457	.505	.554	.602	.650	.698	.747	.795
110	.0697	.0934	.1171	.1645	.212	.259	.307	.354	.402	.449	.497	.544	.591	.639	.686	.734	.781
120	.0685	.0918	.1151	.1617	.208	.255	.302	.348	.395	.441	.488	.535	.581	.628	.674	.721	.768
130	.0673	.0902	.1131	.1590	.205	.251	.296	.342	.388	.434	.480	.525	.571	.617	.663	.709	.755
140	.0662	.0887	.1113	.1563	.201	.246	.291	.337	.382	.427	.472	.517	.562	.607	.652	.697	.742
150	.0651	.0873	.1094	.1537	.1981	.242	.287	.331	.375	.420	.464	.508	.553	.597	.641	.686	.730
175	.0626	.0834	.1051	.1477	.1903	.233	.275	.318	.361	.403	.446	.488	.531	.573	.616	.659	.701
200	.0602	.0807	.1011	.1421	.1831	.244	.265	.306	.347	.388	.429	.470	.511	.552	.593	.634	.675
225	.0580	.0777	.0974	.1369	.1764	.216	.255	.295	.334	.374	.413	.453	.492	.531	.571	.610	.650
250	.0559	.0750	.0940	.1321	.1702	.208	.246	.284	.322	.361	.399	.437	.475	.513	.551	.589	.627
275	.0540	.0724	.0908	.1276	.1644	.201	.238	.275	.311	.348	.385	.422	.459	.495	.532	.569	.606
300	.0523	.0700	.0878	.1234	.1590	.1945	.230	.266	.301	.337	.372	.408	.443	.479	.515	.550	.586
350	.0490	.0657	.0824	.1158	.1491	.1825	.216	.249	.283	.316	.349	.383	.416	.449	.483	.516	.550
400	.0462	.0619	.0776	.1090	.1405	.1719	.203	.235	.266	.298	.329	.360	.392	.423	.455	.486	.518
450	.0436	.0585	.0733	.1030	.1327	.1624	.1921	.222	.252	.281	.311	.341	.370	.400	.430	.459	.489
500	.0414	.0555	.0695	.0977	.1258	.1540	.1821	.210	.238	.267	.295	.323	.351	.379	.407	.436	.464
550	.0393	.0527	.0661	.0928	.1196	.1464	.1731	.1999	.227	.253	.280	.307	.334	.360	.387	.414	.441
600	.0375	.0502	.0630	.0885	.1140	.1395	.1649	.1904	.216	.241	.267	.292	.318	.343	.369	.394	.420

TABLE E7.4 Weight Density of Air *(Continued)*

Air temp. deg F	175 psi	200 psi	225 psi	250 psi	300 psi	400 psi	500 psi	600 psi	700 psi	800 psi	900 psi	1000 psi
30	1.047	1.185	1.323	1.460	1.736	2.29	1.84	3.39	3.94	4.49	5.05	5.60
40	1.026	1.161	1.296	1.431	1.702	2.24	2.78	3.32	3.86	4.40	4.95	5.49
50	1.009	1.142	1.275	1.408	1.674	2.21	2.74	3.27	3.80	4.33	4.87	5.40
60	.986	1.116	1.246	1.376	1.636	2.16	2.68	3.20	3.72	4.24	4.76	5.28
70	.968	1.095	1.223	1.350	1.605	2.12	2.63	3.14	3.65	4.16	4.67	5.18
80	.950	1.075	1.200	1.325	1.575	2.08	2.58	3.08	3.58	4.08	4.58	5.08
90	.932	1.055	1.178	1.301	1.547	2.04	2.53	3.02	3.51	4.00	4.50	4.99
100	.916	1.036	1.157	1.278	1.519	2.00	2.48	2.97	3.45	3.93	4.42	4.90
110	.900	1.018	1.137	1.255	1.492	1.967	2.44	2.92	3.39	3.86	4.34	4.81
120	.884	1.001	1.117	1.234	1.467	1.933	2.40	2.86	3.33	3.80	4.26	4.73
130	.869	.984	1.098	1.213	1.442	1.900	2.36	2.82	3.27	3.73	4.19	4.65
140	.855	.967	1.080	1.193	1.418	1.868	2.32	2.77	3.22	3.67	4.12	4.57
150	.841	.951	1.062	1.173	1.395	1.838	2.28	2.72	3.17	3.61	4.05	4.50
175	.807	.914	1.020	1.127	1.340	1.765	2.19	2.62	3.04	3.47	3.89	4.32
200	.777	.879	.982	1.084	1.289	1.698	2.11	2.52	2.93	3.34	3.75	4.16
225	.749	.847	.946	1.044	1.242	1.636	2.03	2.43	2.82	3.21	3.61	4.00
250	.722	.817	.913	1.088	1.198	1.579	1.959	2.34	2.72	3.10	3.48	3.86
275	.698	.790	.881	.973	1.157	1.525	1.893	2.26	2.63	3.00	3.36	3.73
300	.675	.764	.852	.941	1.119	1.475	1.830	2.19	2.54	2.90	3.25	3.61
350	.633	.716	.800	.883	1.050	1.384	1.717	2.05	2.38	2.72	3.05	3.39
400	.596	.675	.753	.832	.989	1.303	1.618	1.932	2.25	2.56	2.87	3.19
450	.563	.638	.712	.786	.934	1.232	1.529	1.826	2.12	2.42	2.72	3.01
500	.534	.604	.675	.745	.886	1.167	1.449	1.731	2.01	2.29	2.58	2.86
550	.508	.575	.641	.708	.842	1.110	1.377	1.645	1.912	2.18	2.45	2.72
600	.484	.547	.611	.675	.802	1.057	1.312	1.567	1.822	2.08	2.33	2.59

Air density table

The table at the left is calculated for the perfect gas law. Correction for super-compressibility, the deviation from the perfect gas law, would be less than 3 percent and has not been applied.

The weight density of gases other than air can be determined from this table by multiplying the density listed for air by the specific gravity of the gas relative to air, as listed in the tables in Table E7.3.

Source: Reproduced from Technical Paper No. 410–1980, with permission from Crane Co., 3210 Walnut Ave., Long Beach, CA.

TABLE E7.5 Specific Gravity and Viscosity of Liquids

Liquid	Boiling point at atm press	Specific gravity			Viscosity			
		Temp		Based on water = 1 at 60°F	Temp		Centistokes	SSU
		°F	°C		°F	°C		
Acetaldehyde CH_3CHO	69F 20.8C	61 68	16.1 20	0.788 0.762	61 68	16.1 20	0.305 0.295	36
Acetic acid—5% = vinegar CH_3COOH		59	15	1.006				
10%		59	15	1.014	59	15	1.35	31.7
50%		59	15	1.061	59	15	2.27	33
80%		59	15	1.075	59	15	2.85	35
Conc.-glacial	244F 118C	59	15	1.055	59	15	1.34	31.7
Acetic acid anhydride $(CH_3COO)_2O$	139C	59	15	1.087	59	15	0.88	
Acetone CH_3COCH_3	133F 50.5C	68	20	0.792	68 77	20 25	0.41	
Alcohol								
allyl	207F 97.2C	68	20	0.855	68 104	20 40	1.60 0.90 cp	31.8
butyl-n	243F 117C	68 158	20 70	0.81 0.78	68 158	20 70	3.64 1.17	38 31.5
ethyl (grain) C_2H_5OH	172F 78.3C	68 104	20 40	0.789 0.772	68 100	20 37.8	1.52 1.2	31.7 31.5
methyl (wood) CH_3OH	151F 64.7C	68	20	0.79	59 32	15 0	0.74 1.04	
propyl	207F 97.5C	68 32	20 0	0.804 0.817	68 122	20 50	2.8 1.4	35 31.7
Aluminum sulfate—36% sol		60	15.6	1.055	68	20	1.41	31.7
Ammonia	−35.5C	0	−17.8	0.662	0	−17.8	0.30	
Aniline	363F 184.4C	68 32	20 0	1.022 1.035	68 50	20 10	4.37 6.4	40 46.4
Asphalt, blended								
RC-0, MC-0, SC-0		60	15.6	1.0+	77 100	25 37.8	159–324 60–108	737–1.5M 280–500
RC-1, MC-1, SC-1		60	15.6	1.0+	100 122	37.8 50	518–1018 159–324	2.4M–5M 737–1500
RC-2, MC-2, SC-2		60	15.6	1.0+	122 140	50 60	518–1080 215–430	2.4M–5M 1M–2M

TABLE E7.5 Specific Gravity and Viscosity of Liquids *(Continued)*

Liquid	Boiling point at atm press	Specific gravity			Viscosity			
		Temp		Based on water = 1 at 60°F	Temp		Centistokes	SSU
		°F	°C		°F	°C		
Asphalt, blended *Cont'd*					122	50	1295–2805	6M–13M
RC-3, MC-3, SC-3..........		60	15.6	1.0+	140	60	540–1080	2.5M–5M
					140	60	1725–4315	8M–20M
RC-4, MC-4, SC-4..........		60	15.6	1.0+	180	82.8	270–540	1.25M–2.5M
					140	60	6040–18340	28M–85M
RC-5, MC-5, SC-5..........		60	15.6	1.0+	180	82.8	647–1295	3M–6M
					77	25	33–216	155–1M
RS-1, MS-1, SS-1...........		60	15.6	1.0+	100	37.8	19–75	90–350
Asphalt emulsions					77	25	215–1510	1M–7M
Fed #1		60	15.6	1.0+	100	37.8	75–367	350–1700
					77	25	33–216	155–1000
Fed #2, V, VI.................		60	15.6	1.0+	100	37.8	19–75	90–350
Automotive crankcase oils								
SAE-5W..........................		60	15.6	.88–.94	0	−17.8	1295 max	6M–max
SAE 10W........................		60	15.6	.88–.94	0	−17.8	1295–2590	6M–12M
SAE 20W........................		60	15.6	.88–.94	0	−17.8	2590–10350	12M–48M
SAE 20...........................		60	15.6	.88–.94	210	98.9	5.7–9.6	45–58
SAE 30...........................		60	15.6	.88–.94	210	98.9	9.6–12.9	58–70
SAE 40...........................		60	15.6	.88–.94	210	98.9	12.9–16.8	70–85
SAE 50...........................		60	15.6	.88–.94	210	98.9	16.8–22.7	85–110
Automotive gear oils								
SAE 75W........................		60	15.6	.88–.94	210	98.9	4.2 min	40 min
SAE 80W........................		60	15.6	.88–.94	210	98.9	7.0 min	49 min
SAE 85W........................		60	15.6	.88–.94	210	98.9	11.0 min	63 min
SAE 90...........................		60	15.6	.88–.94	210	98.9	14–25	74–120
SAE 140.........................		60	15.6	.88–.94	210	98.9	25–43	120–200
SAE 150.........................		60	15.6	.88–.94	210	98.9	43 min	200 min
Beer....................................		60	15.6	1.01	68	20	1.8	32 (est)
Benzene (Benzol) C_6H_6.....	176F	32	0	0.899	32	0	1.00	31
	80.4C	60	15.6	0.885	68	20	0.744	
Bone oil		60	15.6	0.918	130	54.4	47.5	220
					212	100	11.6	65
Boric acid, sat. H_3BO_3.......		46.4	8	1.014				
		59	15	1.025				

TABLE E7.5 Specific Gravity and Viscosity of Liquids *(Continued)*

Liquid	Boiling point at atm press	Specific gravity			Viscosity			
		Temp		Based on water = 1 at 60°F	Temp		Centistokes	SSU
		°F	°C		°F	°C		
Brine see sodium choride and calcium chloride......								
Bromine..............................	142F 58.8C	68 32	20 0	2.9	68	20	0.34	
Butane-n.............................	31.1F −0.5C	60	15.6	0.584	−50 30	 −1.1	0.52 0.35	
Butyric acid n......................	316F 162.5C	68	20	0.959	68 32	20 0	1.61 2.3cp	31.8
Calcium chloride 5%.................................		65	18.3	1.040	65	18.3	1.156	
25%.................................		60	15.6	1.23	60	15.6	4.0	39
Carbolic acid (phenol).......	360F 182.2C	65	18.3	1.08	65 194	18.3 90	11.83 1.26cp	65
Carbon tetrachloride CCl$_1$	170F 76.7C	68	20	1.594	68 100	20 37.8	0.612 0.53	
Carbon disulfide CS$_2$..................................	115F 46.2C	32 68	0 20	1.293 1.263	32 68	0 20	0.33 0.298	
Castor oil............................		68 104	20 40	0.96 0.95	100 130	37.8 54.4	259–325 98–130	1200–1500 450–600
China wood oil..................		60	15.6	0.943	69 100	20.6 37.8	308.5 125.5	1425 580
Chloroform.........................	142F 61.2C	68 140	20 60	1.489 1.413	68 140	20 60	0.38 0.35	
Coconut oil.........................		60	15.6	0.925	100 130	37.8 54.4	29.8–31.6 14.7–15.7	140–148 76–80
Cod oil		60	15.6	0.928	100 130	37.8 54.4	32.1 19.4	150 95
Corn oil..............................		60	15.6	0.924	130 212	54.4 100	28.7 8.6	135 54
Corn starch solutions 22 Baume........................		60	15.6	1.18	70 100	21.1 37.8	32.1 27.5	150 130
24 Baume........................		60	15.6	1.20	70 100	21.1 37.8	129.8 95.2	600 440
25 Baume........................		60	15.6	1.21	70 100	21.1 37.8	303 173.2	1400 800

TABLE E7.5 Specific Gravity and Viscosity of Liquids *(Continued)*

Liquid	Boiling point at atm press	Specific gravity			Viscosity			
		Temp		Based on water = 1 at 60°F	Temp		Centistokes	SSU
		°F	°C		°F	°C		
Cotton seed oil		60	15.6	.88–.93	100	37.8	37.9	176
					130	54.4	20.6	100
Creosote		60	15.6	1.04–1.10	60	15.6		
					130	54.4		
Crude oil								
48° API		60	15.6	0.79	60	15.6	3.8	39
		130	54.4	0.76	130	54.4	1.6	31.8
40° API		60	15.6	0.825	60	15.6	9.7	55.7
		130	54.4	0.805	130	54.4	3.5	38
35.6 API		60	15.6	0.847	60	15.6	17.8	88.4
		130	54.4	0.824	130	54.4	4.9	42.3
32.6 API		60	15.6	0.862	60	15.6	23.2	110
		130	54.4	0.84	130	54.4	7.1	46.8
Salt Creek		60	15.6	0.843	60	15.6	77	
		130	54.4	0.82	130	54.4	6.1	45.6
Decane-n	343F	68	20	0.73	0	−17.8	2.36	34
	173C				100	37.8	1.001	31
Diethylene glycol		60	15.6	1.12	70	21.1	32	149.7
Diethyl ether	94.4F	68	20	0.714	68	20	0.32	
Diesel fuel oils								
2D		60	15.6	.82–.95	100	37.8	2–6	32.6–45.5
					130	54.4	1.–3.97	–39
3D		60	15.6	.82–.95	100	37.8	6–11.75	45.5–65
					130	54.4	3.97–6.78	39–48
4D		60	15.6	.82–.95	100	37.8	29.8 max	140 max
					130	54.4	13.1 max	70 max
5D		60	15.6	.82–.95	122	50	86.6 max	400 max
					160	71.1	35.2 max	165 max
Ethyl acetate $CH_3COOC_2H_3$	171F	59	15	0.907	59	15	0.4	
	77.2C	68	20	0.90	68	20	0.49	
Dowtherm	494.3°	77	25°C	1.056	77	25		
Ethyl bromide C_2H_3Br	101F	59	15	1.45	68	20	0.27	
	77.2C							
Ethylene bromide	269F	68	20	2.18	68	20	0.787	
	131.7C							
Ethylene chloride	183F	68	20	1.246	68	20	0.668	
	837C							

TABLE E7.5 Specific Gravity and Viscosity of Liquids *(Continued)*

Liquid	Boiling point at atm press	Specific gravity			Viscosity			
		Temp		Based on water = 1 at 60°F	Temp		Centistokes	SSU
		°F	°C		°F	°C		
Ethylene glycol		60	15.6	1.125	70	21.1	17.8	88.4
Formic acid								
10%		68	20	1.025	68	20	1.04	31
50%		68	20	1.121	68	20	1.2	31.5
80%		68	20	1.186	68	20	1.4	31.7
Conc.		60	15.6	1.221	68 77	20 25	1.48 1.57cp	31.7
Freon								
−11		70	21.1	1.49	70	21.1	0.21	
−12		70	21.1	1.33	70	21.1	0.27	
−21		70	21.1	1.37	70	21.1	1.45	31.7
Furfurol	161.7C	68	20	1.159	68 77	20 25	1.45 1.49cp	31.7
Fuel oils								
1		60	15.6	.82–.95	70 100	21.1 37.8	2.39–4.28 –2.69	34–40 32–35
2		60	15.6	.82–.95	70 100	21.1 37.8	3.0–7.4 2.11–4.28	36–50 33–40
3		60	15.6	.82–.95	70 100	21.1 37.8	2.69–5.84 2.06–3.97	35–45 32.8–39
5A		60	15.6	.82–.95	70 100	21.1 37.8	7.4–26.4 4.91–13.7	50–125 42–72
5B		60	15.6	.82–.95	70 100	21.1 37.8	26.4– 13.6–67.1	125– 72–310
6		60	15.6	.82–.95	122 160	50 71.1	97.4–660 37.5–172	450–3M 175–780
Gas oils		60	15.6	0.89	70 100	21.1 37.8	13.9 7.4	73 50
Gasolines								
a		60	15.6	0.74	60 100	15.6 37.8	0.88 0.71	
b		60	15.6	0.72	60 100	15.6 37.8	0.64	
c		60	15.6	0.68	60 100	15.6 37.8	0.46 0.40	

TABLE E7.5 Specific Gravity and Viscosity of Liquids *(Continued)*

Liquid	Boiling point at atm press	Specific gravity			Viscosity			
		Temp		Based on water = 1 at 60°F	Temp		Centistokes	SSU
		°F	°C		°F	°C		
Glycerine								
100%	554F	68	20	1.260	68.6	20.3	648	2950
					100	37.8	176	813
50% water		68	20	1.13	68	20	5.29	43
					140	60	1.85cp	
Glucose		60	15.6	1.35–1.44	100	37.8	7.7M–22M	35M–100M
					150	65.6	880–2420	4M–11M
Heptane-n	209.2F	60	15.6	0.688	0	−17.8	0.928	
	98.4C				100	37.8	0.511	
Hexane-n	155.7F	60	15.6	0.664	0	−17.8	0.683	
	68.7C				100	37.8	0.401	
Honey					100	37.8	73.0	340
Industrial lubricants								
Turbine oils								
685					60	15.6	647	3000
SSU at 100°F					200	93.3	14.5	77
420					60	15.6	367	1700
SSU					200	93.3	11	63
315					60	15.6	259	1200
SSU					200	93.3	8	52
215					60	15.6	151	700
SSU					200	93.3	7.3	48
150					60	15.6	99	460
SSU					200	93.3	6	45.5
Machine lubricants								
#8				.88–.94	100	37.8	23–34	112–160
					130	54.4	13–18	70–90
#10				.88–.94	100	37.8	34–72	160–235
					130	54.4	18–25	90–120
#20				.88–.94	100	37.8	72–83	235–385
					130	54.4	25–39	120–185
#30				.88–.94	100	37.8	75–119	350–550
					130	54.4	39–55	185–255
Cutting oils								
#1					100	37.8	30–40	140–190
					130	54.4	17–23	86–110
#2					100	37.8	40–46	190–220
					130	54.4	23–26	110–125

TABLE E7.5 Specific Gravity and Viscosity of Liquids *(Continued)*

Liquid	Boiling point at atm press	Specific gravity			Viscosity			
		Temp		Based on water = 1 at 60°F	Temp		Centistokes	SSU
		°F	°C		°F	°C		
Ink, printers		60	15.6	1.0–1.4	100	37.8	550–2200	2500–10M
					130	54.4	238–660	1100–3M
Insulating oil					70	21.1	24.1 max	115 max
					100	37.8	11.75 max	65 max
Kerosene		60	15.6	.78–.82	68	20	2.71	35
Jet fuel (av)	325F	60	15.6	.82	−30	−34.4	7.9	52
Lard		60	15.6	0.96	100	37.8	62.1	287
					130	54.4	34.3	160
Lard oil		60	15.6	.91–.93	100	37.8	41–47.5	190–220
					130	54.4	23.4–27.1	112–128
Linseed oil		60	15.6	.92–.94	100	37.8	30.5	143
					130	54.4	18.94	93
Mercury	675.1F	60	15.6	13.57	70	21.1	0.118	
	356.9C				100	37.8	0.11	
Methyl acetate	135F	68	20	0.93	68	20	0.44	
	57.2C				104	40	0.32cp	
Methyl iodide	108F	68	20	2.28	68	20	0.213	
	42.6C				104	40	0.42cp	
Menhadden oil		60	15.6	0.93	100	37.8	29.8	140
					130	54.4	18.2	90
Milk		60	15.6	1.02–1.05	68	20	1.13	31.5
Molasses								
A, first		60	15.6	1.40–1.46	100	37.8	281–5070	1300–23500
					130	54.4	151–1760	700–8160
B, second		60	15.6	1.43–1.48	100	37.8	1410–13.2M	6535–61180
					130	54.4	660–3.3M	3058–15294
C, blackstrap		60	15.6	1.46–1.49	100	37.8	2630–55M	12190–255M
					130	54.4	1320–16.5M	6120–76.5M
Naphthalene	424F	68	20	1.145	176	80	0.9	
	218C				212	100	0.78cp	
Neatsfoot oil		60	15.6	0.917	100	37.8	49.7	230
					130	54.4	27.5	130
Nitrobenzene	412F	68	20	1.203	68	20	1.67	31.8
	210.9C	59	15	1.205				
Nonane-n	302F	60	15.6	0.7218	0	−17.8	1.728	32
	150.7C	68	20	0.718	100	37.8	0.807	

TABLE E7.5 Specific Gravity and Viscosity of Liquids *(Continued)*

		Specific gravity			Viscosity			
		Temp		Based on water = 1 at 60°F	Temp			
Liquid	Boiling point at atm press	°F	°C		°F	°C	Centistokes	SSU
Octane-n	258F	60	15.6	0.7069	0	−17.8	1.266	31.7
	125.6C				100	37.8	0.645	
Olive oil	(570)F	60	15.6	.91–.92	100	37.8	43.2	200
	(300)C				130	54.4	24.1	
Palm oil		60	15.6	0.924	100	37.8	47.8	
					130	54.4	26.4	
Peanut oil		60	15.6	0.92	100	37.8	42	200
					130	54.4	23.4	
Pentane-n	96.9F	32	0	0.650	0	−17.8	0.508	
	36C	60	15.6	0.631	80	26.7	0.342	
Petrolatum		60	15.6	0.83	130	54.4	20.5	100
					160	71.1	15	77
Petroleum ether		60	15.6	0.64	60	15.6	31(est)	1.1
Propionic acid	286F	68	20	0.99	32	0	1.52cp	31.5
					68	20	1.13	
Propylene glycol		68	20	1.038	70	21.1	52	241
Quenching oil (typical)		60	15.6	.86–.89			100–120	20.5–25
Rapeseed oil		68	20	0.92	100	37.8	54.1	250
					130	54.4	31	145
Rosin oil		60	15.6	0.98	100	37.8	324.7	1500
					130	54.4	129.9	600
Rosin (wood)		60	15.6	1.09 avg	100	37.8	216–11M	1M–50M
					200	93.3	108–4400	500–20M
Sesame seed oil		60	15.6	0.923	100	37.8	39.6	184
					130	54.4	23	110
Sodium chloride								
5%		39	3.9	1.037	68	20	1.097	31.1
25%		39	3.9	1.196	60	15.6	2.4	34
		60	15.6	1.19				
Sodium hydroxide (caustic soda)								
20%		60	15.6	1.22	65	18.3	4.0	39.4
30%		60	15.6	1.33	65	18.3	10.0	58.1
40%		60	15.6	1.43	65	18.3		110.1
Soya bean oil		60	15.6	.924–.928	100	37.8	35.4	165
					130	54.4	19.64	96

TABLE E7.5 Specific Gravity and Viscosity of Liquids *(Continued)*

Liquid	Boiling point at atm press	Specific gravity			Viscosity			
		Temp °F	Temp °C	Based on water = 1 at 60°F	Temp °F	Temp °C	Centistokes	SSU
Sperm oil		60	15.6	1.35–1.44	100 130	37.8 54.4	21–23 15.2	110 78
Sugar solutions								
Corn syrup								
86.4 Brix		60	15.6	1.459	100 180	37.8 82.2	180Mcp 1750cp	
84.4 Brix		60	15.6	1.445	100 180	37.8 82.2	48Mcp 800cp	
82.3 Brix		60	15.6	1.431	100 180	37.8 82.2	17Mcp 380cp	
80.3 Brix		60	15.6	1.418	100 180	37.8 82.2	6900cp 230cp	
78.4 Brix		60	15.6	1.405	100 180	37.8 82.2	3200cp 160cp	
Sugar solutions								
Sucrose								
60 Brix		60	15.6	1.29	70 100	21.1 37.8	49.7 18.7	230 92
64 Brix		60	15.6	1.31	70 100	21.1 37.8	95.2 31.6	440 148
68 Brix		60	15.6	1.338	70 100	21.1 37.8	216.4 59.5	1000 275
72 Brix		60	15.6	1.36	70 100	21.1 37.8	595 138.6	2700 640
74 Brix		60	15.6	1.376	70 100	21.1 37.8	1210 238	5500 1100
76 Brix		60	15.6	1.39	70 100	21.1 37.8	2200 440	10000 2000
Sulfur	444.6C							
Sulfuric acid								
100%		68	20	1.839	68 140	20 60	14.6 7.2cp	76
95%		68	20	1.839	68	20	14.5	75
60%		68	20	1.50	68	20	4.4	41
20%		68	20	1.14				
Tar, coke oven		60	15.6	1.12+	70 100	21.1 37.8	600–1760 141–308	3M–8M 650–1400

TABLE E7.5 Specific Gravity and Viscosity of Liquids *(Continued)*

Liquid	Boiling point at atm press	Specific gravity			Viscosity			
		Temp		Based on water = 1 at 60°F	Temp		Centistokes	SSU
		°F	°C		°F	°C		
Tar, gas house		60	15.6	1.16–1.30	70	21.1	3300–66M	15M–300M
					100	37.8	440–4400	2M–20M
Tar, pine		60	15.6	1.06+	100	37.8	559	2500
					132	55.6	108.2	500
Tar, road—								
RT-2		60	15.6	1.07+	122	50	43.2–64.9	200–300
					212	100	8.8–10.2	55–60
RT-4		60	15.6	1.08+	122	50	86.6–154	400–700
					212	100	11.6–14.3	65–70
RT-6		60	15.6	1.09+	122	50	216–440	1M–2M
					212	100	16.8–26.2	85–125
RT-8		60	15.6	1.13+	122	50	660–1760	3M–8M
					212	100	31.8–48.3	150–225
RT-10		60	15.6	1.14+	122	50	4.4M–13.2M	20M–60M
					212	100	53.7–86.6	250–400
RT-12		60	15.6	1.15+	122	50	25M–75M	114M–456M
					212	100	108–173	500–800
Toluene	231F	68	20	0.866	68	20	0.68	
	110.6C				140	60	0.38cp	
Triethylene glycol		68	20	1.125	70	21.1	40	185.7
Turpentine	320F	60	15.6	.86–.87	100	37.8	86.6–95.2	400–440
					130	54.4	39.9–44.3	185–205
Varnish, spar		60	15.6	0.9	68	20	313	1425
					100	37.8	143	650
Water								
distilled		60	15.6	1.00	68	20	1.0038	31
fresh		60	15.6	1.0	60	15.6	1.13	31.5
					130	54.4	0.55	
sea		60	15.6	1.03			1.15	31.5
Whale oil		60	15.6	0.925	100	37.8	35–39.6	163–184
					130	54.4	19.9–23.4	97–112
Xylene-o	287F	68	20	0.87	68	20	0.93	
	142.7C				104	40	0.623cp	

Source: Based on material from Hydraulic Institute, with additions by Ingersoll-Dresser Pumps.

Reprinted with permission from the 18th edition of *Cameron Hydraulic Data,* copyright Ingersoll-Dresser Pump Company, Liberty Corner, New Jersey.

APPENDIX E8

MISCELLANEOUS MATERIALS AND THEIR PROPERTIES

Akhil Prakash, P.E.
Senior Engineer
Wolf Creek Nuclear Operating Corporation
Burlington, Kansas

TABLE E8.1 Nominal Coefficients of Thermal Expansion for Ferrous Materials

		Temperature, °F						
Materials	Coefficient	70	100	150	200	250	300	350
Carbon and low alloy steels								
Material Group A [Note (1)]	A	6.41	6.53	6.73	6.93	7.12	7.30	7.49
	B	. . .	6.50	6.57	6.67	6.77	6.87	6.98
	C	0	0.0023	0.0063	0.0104	0.0146	0.0190	0.0235
Material Group B [Note (2)]	A	5.60	5.83	6.20	6.55	6.88	7.18	7.47
	B	. . .	5.73	5.91	6.09	6.27	6.43	6.59
	C	0	0.0021	0.0057	0.0095	0.0135	0.0177	0.0221
Material Group C [Note (3)]	A	5.42	5.65	6.03	6.39	6.73	7.04	7.33
	B	. . .	5.53	5.71	5.89	6.09	6.26	6.43
	C	0	0.0020	0.0055	0.0092	0.0132	0.0173	0.0216
Material Group D [Note (4)]	A	7.02	7.13	7.29	7.45	7.60	7.74	7.88
	B	. . .	7.06	7.16	7.25	7.34	7.43	7.50
	C	0	0.0025	0.0069	0.0113	0.0158	0.0205	0.0252
Material Group E [Note (5)]	A	6.20	6.37	6.62	6.85	7.05	7.25	7.43
	B	. . .	6.27	6.41	6.54	6.65	6.78	6.88
	C	0	0.0023	0.0062	0.0102	0.0144	0.0187	0.0231
2¼Cr–1Mo	A	6.45	6.60	6.80	6.90	7.16	7.35	7.48
	B	. . .	6.50	6.60	6.70	6.80	6.90	6.98
	C	0	0.0023	0.0063	0.0105	0.0147	0.0190	0.0235
5Cr–½Mo, 5Cr–½Mo–Si, and 5Cr–½Mo–Ti	A	6.52	6.59	6.71	6.83	6.94	7.04	7.15
	B	. . .	6.50	6.65	6.73	6.80	6.87	6.93
	C	0	0.0026	0.0066	0.0107	0.0149	0.0190	0.0233
7Cr–½Mo and 9Cr-1Mo	A	5.82	5.90	6.03	6.16	6.29	6.41	6.53
	B	. . .	5.85	5.93	6.02	6.10	6.15	6.23
	C	0	0.0021	0.0057	0.0094	0.0132	0.0170	0.0209
Mn–V	A	6.60	6.79	7.00	7.20	7.40	7.58	7.75
	B	. . .	6.68	6.80	6.90	7.05	7.15	7.25
	C	0	0.0024	0.0065	0.0108	0.0152	0.0197	0.0244
5Ni–¼Mo	A	6.20	6.34	6.55	6.74	6.90	7.06	7.21
	B	. . .	6.27	6.41	6.50	6.59	6.68	6.76
	C	0	0.0023	0.0062	0.0101	0.0142	0.0184	0.0227
8Ni and 9Ni	A	5.50	5.70	6.00	6.25	6.45	6.60	6.75
	B	. . .	5.63	5.80	5.94	6.06	6.17	6.28
	C	0	0.0020	0.0056	0.0093	0.0131	0.0170	0.0211
High chrome steels								
12Cr, 12Cr–1Al, 13Cr, and 13Cr–4Ni	A	5.92	6.03	6.18	6.30	6.41	6.50	6.59
	B	. . .	5.98	6.08	6.15	6.23	6.30	6.35
	C	0	0.0022	0.0058	0.0096	0.0135	0.0174	0.0213
15Cr and 17Cr	A	5.33	5.41	5.54	5.66	5.77	5.88	5.99
	B	. . .	5.37	5.45	5.52	5.59	5.65	5.70
	C	0	0.0019	0.0052	0.0086	0.0121	0.0156	0.0192

TABLE E8.1 Nominal Coefficients of Thermal Expansion for Ferrous Materials (*Continued*)

Temperature, °F								
400	450	500	550	600	650	700	750	800
Carbon and low alloy steels								
7.66	7.84	8.03	8.21	8.35	8.51	8.64	8.78	8.90
7.07	7.15	7.25	7.34	7.42	7.52	7.59	7.68	7.76
0.0280	0.0326	0.0374	0.0423	0.0472	0.0523	0.0574	0.0627	0.0680
7.73	7.97	8.18	8.38	8.55	8.70	8.83	8.94	9.02
6.74	6.89	7.06	7.18	7.28	7.40	7.51	7.61	7.71
0.0267	0.0314	0.0364	0.0414	0.0463	0.0515	0.0568	0.0621	0.0675
7.60	7.85	8.07	8.28	8.46	8.62	8.75	8.87	8.96
6.61	6.77	6.91	7.06	7.17	7.30	7.41	7.50	7.59
0.0262	0.0309	0.0357	0.0407	0.0456	0.0508	0.0560	0.0612	0.0665
8.01	8.13	8.25	8.36	8.46	8.55	8.63	8.71	8.78
7.58	7.63	7.70	7.77	7.83	7.90	7.94	8.00	8.05
0.0300	0.0348	0.0397	0.0448	0.0498	0.0550	0.0600	0.0653	0.0706
7.59	7.75	7.90	8.04	8.16	8.28	8.39	8.49	8.57
6.98	7.07	7.16	7.24	7.32	7.41	7.47	7.55	7.61
0.0276	0.0322	0.0369	0.0417	0.0466	0.0516	0.0565	0.0616	0.0667
7.65	7.76	7.90	7.99	8.10	8.17	8.25	8.32	8.40
7.07	7.15	7.23	7.31	7.38	7.45	7.50	7.56	7.62
0.0280	0.0326	0.0373	0.0421	0.0469	0.0519	0.0567	0.0617	0.0668
7.25	7.35	7.44	7.53	7.62	7.71	7.79	7.87	7.95
6.97	7.00	7.05	7.10	7.15	7.19	7.24	7.28	7.32
0.0276	0.0319	0.0364	0.0409	0.0455	0.0500	0.0547	0.0594	0.0641
6.64	6.75	6.87	6.97	7.07	7.17	7.27	7.36	7.44
6.29	6.34	6.40	6.46	6.51	6.57	6.62	6.66	6.71
0.0249	0.0289	0.0330	0.0372	0.0414	0.0457	0.0500	0.0544	0.0588
7.90	8.05	8.17	8.30	8.40	8.50	8.60	8.70	8.78
7.33	7.40	7.50	7.58	7.65	7.74	7.80	7.87	7.93
0.0290	0.0337	0.0388	0.0437	0.0486	0.0539	0.0590	0.0642	0.0695
7.35	7.50	7.63	7.76	7.89	8.00	8.12	8.23	8.33
6.84	6.92	6.99	7.06	7.14	7.21	7.27	7.34	7.40
0.0271	0.0315	0.0361	0.0407	0.0454	0.0501	0.0549	0.0599	0.0649
6.90	7.04	7.16	7.27	7.37	7.45	7.52	7.57	7.64
6.39	6.47	6.56	6.63	6.70	6.72	6.78	6.84	6.89
0.0253	0.0295	0.0338	0.0382	0.0426	0.0468	0.0513	0.0558	0.0604
High chrome steels								
6.66	6.72	6.77	6.83	6.88	6.94	6.99	7.05	7.11
6.40	6.44	6.48	6.51	6.53	6.57	6.60	6.64	6.67
0.0253	0.0294	0.0334	0.0375	0.0415	0.0457	0.0499	0.0542	0.0584
6.09	6.19	6.28	6.37	6.46	6.54	6.62	6.70	6.77
5.75	5.80	5.85	5.90	5.95	6.00	6.05	6.09	6.13
0.0228	0.0264	0.0302	0.0340	0.0378	0.0418	0.0457	0.0497	0.0537

TABLE E8.1 Nominal Coefficients of Thermal Expansion for Ferrous Materials (*Continued*)

		Temperature, °F						
Materials	Coefficient	70	100	150	200	250	300	350
High chrome steels (*Cont'd*)								
27Cr	A	5.02	5.07	5.14	5.22	5.29	5.36	5.44
	B	. . .	5.06	5.12	5.15	5.20	5.23	5.26
	C	0	0.0018	0.0049	0.0080	0.0112	0.0144	0.0177
High alloy steels								
18Cr–13Ni–3Mo and 16Cr–12Ni–2Mo [Note (6)]	A	8.42	8.59	8.84	9.09	9.33	9.56	9.76
	B	. . .	8.54	8.64	8.76	8.88	8.97	9.11
	C	0	0.0031	0.0083	0.0137	0.0192	0.0248	0.0306
17Cr–4Ni–4Cu	A	5.89	5.89	5.89	5.90	5.90	5.90	5.91
	B	. . .	5.89	5.89	5.90	5.90	5.90	5.91
	C	0	0.0021	0.0057	0.0092	0.0127	0.0163	0.0199
18Cr–5Ni–3Mo	A	7.94	8.06	8.26	8.43	8.61	8.78	8.94
	B	. . .	8.03	8.17	8.25	8.35	8.45	8.54
	C	0	0.0029	0.0078	0.0129	0.0180	0.0233	0.0287
18Cr–8Ni [Note (6)] and 18Cr–11Ni	A	8.46	8.63	8.87	9.08	9.27	9.46	9.64
	B	. . .	8.55	8.67	8.79	8.90	9.00	9.10
	C	0	0.0031	0.0083	0.0137	0.0192	0.0248	0.0306
18Cr–10Ni–Ti	A	8.97	9.03	9.13	9.23	9.33	9.41	9.49
	B	. . .	9.02	9.10	9.16	9.22	9.26	9.30
	C	0	0.0033	0.0088	0.0143	0.0199	0.0256	0.0312
18Cr–10Ni–Cb	A	8.53	8.70	9.00	9.29	9.55	9.78	9.98
	B	. . .	8.62	8.75	8.92	9.07	9.22	9.32
	C	0	0.0031	0.0084	0.0139	0.0196	0.0254	0.0313
19Cr–9Ni–Mo–W	A	9.10	9.21	9.38	9.54	9.70	9.85	9.99
	B	. . .	9.17	9.27	9.37	9.46	9.54	9.63
	C	0	0.0033	0.0089	0.0146	0.0204	0.0263	0.0324
22Cr–13Ni–5Mn	A	8.24	8.35	8.51	8.67	8.81	8.95	9.08
	B	. . .	8.30	8.40	8.48	8.57	8.65	8.73
	C	0	0.0030	0.0081	0.0132	0.0185	0.0239	0.0293
25Cr–12Ni, 23Cr–12Ni, and 25Cr–20Ni	A	8.81	8.89	8.99	9.06	9.11	9.17	9.22
	B	. . .	8.87	8.95	9.02	9.06	9.10	9.12
	C	0	0.0032	0.0086	0.0141	0.0196	0.0251	0.0306
25Ni–15Cr–2Ti	A	8.22	8.31	8.46	8.61	8.75	8.89	9.02
	B	. . .	8.24	8.32	8.39	8.47	8.54	8.62
	C	0	0.0030	0.0080	0.0131	0.0183	0.0236	0.0290
28Ni–19Cr–Cu–Mo	A	8.72	8.84	8.93	9.02	9.11	9.20	9.29
	B	. . .	8.75	8.85	8.90	8.99	9.04	9.09
	C	0	0.0032	0.0085	0.0139	0.0194	0.0250	0.0305

Source: Reproduced from 1995 ASME Section II, Part D, with permission from American Society of Mechanical Engineers, 345 East 47th St., New York, NY.

GENERAL NOTE:

Coefficient A is the instantaneous coefficient of thermal expansion × 10^{-6} (in./in./°F). Coefficient B is the mean coefficient of thermal expansion × 10^{-6} (in./in./°F) in going from 70°F to indicated temperature. Coefficient C is the linear thermal expansion (in./ft) in going from 70°F to indicated temperature.

TABLE E8.1 Nominal Coefficients of Thermal Expansion for Ferrous Materials (*Continued*)

Temperature, °F								
400	450	500	550	600	650	700	750	800
High chrome steels (Cont'd)								
5.51	5.58	5.66	5.73	5.80	5.88	5.94	6.02	6.09
5.30	5.33	5.37	5.40	5.43	5.47	5.50	5.54	5.57
0.0210	0.0243	0.0277	0.0311	0.0345	0.0381	0.0416	0.0452	0.0488
High alloy steels								
9.95	10.10	10.25	10.38	10.51	10.64	10.76	10.87	10.98
9.21	9.32	9.42	9.50	9.60	9.69	9.76	9.81	9.90
0.0365	0.0425	0.0486	0.0547	0.0611	0.0674	0.0738	0.0800	0.0867
5.91	5.91	5.91	5.93	5.96	5.99	6.03	6.08	6.14
5.91	5.91	5.91	5.93	5.93	5.93	5.94	5.95	5.96
0.0234	0.0269	0.0305	0.0342	0.0377	0.0413	0.0449	0.0486	0.0522
9.09	9.24	9.38	9.52	9.64	9.76	9.87	9.96	10.06
8.61	8.69	8.76	8.83	8.90	8.97	9.04	9.10	9.16
0.0341	0.0396	0.0452	0.0509	0.0566	0.0624	0.0683	0.0743	0.0802
9.80	9.95	10.10	10.25	10.38	10.50	10.60	10.70	10.79
9.19	9.28	9.37	9.45	9.53	9.61	9.69	9.76	9.82
0.0364	0.0423	0.0483	0.0544	0.0606	0.0669	0.0733	0.0796	0.0860
9.57	9.64	9.72	9.78	9.85	9.92	9.98	10.04	10.10
9.34	9.38	9.42	9.45	9.48	9.52	9.55	9.58	9.61
0.0370	0.0427	0.0486	0.0545	0.0602	0.0662	0.0722	0.0787	0.0842
10.16	10.30	10.44	10.55	10.66	10.76	10.86	10.96	11.05
9.45	9.55	9.65	9.75	9.83	9.90	9.97	10.03	10.08
0.0374	0.0435	0.0498	0.0562	0.0625	0.0689	0.0754	0.0818	0.0883
10.13	10.26	10.38	10.50	10.61	10.72	10.81	10.91	10.99
9.69	9.76	9.83	9.89	9.95	10.01	10.07	10.13	10.18
0.0384	0.0445	0.0507	0.0570	0.0633	0.0697	0.0761	0.0827	0.0892
9.21	9.33	9.44	9.54	9.64	9.73	9.82	9.89	9.97
8.79	8.86	8.92	8.98	9.03	9.09	9.15	9.20	9.25
0.0348	0.0404	0.0460	0.0517	0.0574	0.0633	0.0692	0.0751	0.0810
9.27	9.29	9.33	9.37	9.39	9.44	9.47	9.52	9.56
9.14	9.16	9.18	9.20	9.21	9.23	9.25	9.27	9.28
0.0362	0.0418	0.0474	0.0530	0.0586	0.0642	0.0699	0.0756	0.0813
9.14	9.26	9.37	9.48	9.58	9.68	9.77	9.85	9.93
8.69	8.76	8.82	8.88	8.94	9.00	9.06	9.11	9.17
0.0344	0.0399	0.0455	0.0512	0.0569	0.0627	0.0685	0.0744	0.0803
9.38	9.48	9.57	9.66	9.76	9.86	9.95	10.04	10.14
9.14	9.18	9.22	9.26	9.30	9.35	9.39	9.44	9.48
0.0362	0.0419	0.0476	0.0533	0.0591	0.0651	0.0710	0.0770	0.0830

Notes continue on next page.

TABLE E8.1 Nominal Coefficients of Thermal Expansion for Ferrous Materials (*Continued*)

Notes:

(1) Material Group A consists of:
  - Plain carbon steels
  - Carbon–manganese steel
  - ½Ni–½Mo–V
  - ¾Ni–½Mo–Cr–V
  - ¾Ni–½Mo–⅓Cr–V
  - ¾Ni–1Mo–¾Cr
  - ¾Ni–½Cr–½Mo–V
  - 1Ni–½Cr–½Mo
  - ½Ni–½Cr–¼Mo–V
  - ¾Ni–½Cu–Mo
  - ¾Cr–¾Ni–Cu–Al
  - ¾Cr–½Ni–Cu

(2) Material Group B consists of:
  - Carbon–silicon steels
  - C–½Mo
  - ½Cr–½Ni–⅕Mo
  - ½Cr–½Mo
  - ½Cr–⅕Mo–V
  - 1Cr–½Mo
  - 1Cr–⅕Mo
  - 1Cr–⅕Mo–Si
  - 1¾Cr–½Mo–Cu

(3) Material Group C consists of:
  - C–Mn–Si steels
  - ½Cr–¼Mo–Si
  - 1Cr–½Mo–V
  - ¼Cr–½Mo
  - 1¼Cr–½Mo–Si
  - 2Cr–½Mo
  - 3Cr–1Mo

(4) Material Group D consists of:
  - Mn–¼Mo
  - Mn–½Mo
  - Mn–½Mo–¼Ni
  - Mn–½Mo–½Ni
  - Mn–½Mo–¾Ni

(5) Material Group E consists of:
  - 1¼Ni–1Cr–½Mo
  - 1¾Ni–¾Cr–¼Mo
  - 2Ni–¾Cr–¼Mo
  - 2Ni–¾Cr–⅓Mo
  - 2Ni–1Cu
  - 2½Ni and 3½Ni
  - 3½Ni–1¾Cr–½Mo–V

(6) Includes N grades also

TABLE E8.2 Moduli of Elasticity E of Ferrous Materials for Given Temperatures

	Modulus of Elasticity E = Value Given $\times 10^6$ psi, for Temp., °F, of											
Materials	−325	−200	−100	70o	200	300	400	500	600	700	800	900
Carbon steels with $C \leq 0.30\%$	31.4	30.8	30.2	29.5	28.8	28.3	27.7	27.3	26.7	25.5	24.2	22.4
Carbon steels with $C > 0.30\%$	31.2	30.6	30.0	29.3	28.6	28.1	27.5	27.1	26.5	25.3	24.0	22.3
Material Group A[1]	31.1	30.5	29.9	29.2	28.5	28.0	27.4	27.0	26.4	25.3	23.9	22.2
Material Group B[2]	29.6	29.1	28.5	27.8	27.1	26.7	26.1	25.7	25.2	24.6	23.0	. . .
Material Group C[3]	31.6	31.0	30.4	29.7	29.0	28.5	27.9	27.5	26.9	26.3	25.5	24.8
Material Group D[4]	32.6	32.0	31.4	30.6	29.8	29.4	28.8	28.3	27.7	27.1	26.3	25.6
Material Group E[5]	32.9	32.3	31.7	30.9	30.1	29.7	29.0	28.6	28.0	27.3	26.1	24.7
Material Group F[6]	31.2	30.7	30.1	29.2	28.5	27.9	27.3	26.7	26.1	25.6	24.7	23.2
Material Group G[7]	30.3	29.7	29.1	28.3	27.6	27.0	26.5	25.8	25.3	24.8	24.1	23.5

Notes:

(1) Material Group A consists of the following carbon–molybdenum steels:

- C–½Mo
- Mn–½Mo
- Mn–¼Mo
- Mn–V

(2) Material Group B consists of the following Ni steels:

- ¾Ni–½Mo–Cr–V
- ½Ni–½Mo–V
- ¾Ni–½Mo–⅓Cr–V
- ¾Cr–¾Ni–Cu–Al
- ¾Cr–½Ni–Cu
- ¾Ni–½Cu–Mo
- 1Ni–½Cr–½Mo
- ¾Ni–1Mo–¾Cr
- ½Ni–½Cr–¼Mo–V
- 2Ni–1Cu
- 2½Ni
- 3½Ni

(3) Material Group C consists of the following ½–2Cr steels:

- ½Cr–½Mo
- 1Cr–½Mo
- 1¼Cr–½Mo–Si
- 1¼Cr–½Mo
- 2Cr–½Mo

(4) Material Group D consists of the following 2¼–3Cr steels:

- 2¼Cr–1Mo
- 3Cr–1Mo

(5) Material Group E consists of the following 5–9Cr steels:

- 5Cr–½Mo
- 5Cr–½Mo–Si
- 5Cr–½Mo–Ti
- 7Cr–½Mo
- 9Cr–Mo

(6) Material Group F consists of the following chromium steels:

- 12Cr–Al
- 13Cr
- 15Cr
- 17Cr

(7) Material Group G consists of the following austenitic steels:

- 18Cr–8Ni
- 18Cr–8Ni–N
- 16Cr–12Ni
- 18Cr–13Ni–3Mo
- 16Cr–12Ni–2Mo–N
- 18Cr–3Ni–13Mn
- 18Cr–10Ni–Ti
- 18Cr–10Ni–Cb
- 18Cr–18Ni–2Si
- 20Cr–6Ni–9Mn
- 22Cr–13Ni–5Mn
- 23Cr–12Ni
- 25Cr–20Ni

Source: Reproduced from 1995 ASME Section II, Part D, with permission from American Society of Mechanical Engineers, 345 East 47th St., New York, NY.

APPENDIX E9

PIPING-RELATED COMPUTER PROGRAMS AND THEIR CAPABILITIES

Anthony W. Paulin
President
Paulin Research Group
Woodlands, TX 77302

Computer technology and world standards for the conduct of engineering practice continue to evolve at a rapid pace. In this appendix, over 40 piping-related programs are listed, together with several that relate to machinery and equipment closely associated with piping. It is beyond the scope of this handbook to identify those programs that are compliant to the codes and standards mentioned in Chap. A4, or to ISO-9000, or other standards. It is customary for software users to ascertain the state of compliance to the relevant codes of the programs they use. This is done in contract negotiations with the software vendors.

The trend today is toward more integrated systems of management, design, manufacturing, and construction. Some of the software listed in this appendix is suitable for use in some integrated systems, and some is incapable of such use at present. It is beyond the scope of this handbook to address integrated systems that include CAD/CAM modules such as FORAN, HICADEC, ISDP, NAPA, and TRIBON. Similarly, software that primarily supports management and nontechnical functions is mentioned only if it has some technical value for the piping designer.

Changing codes, hardware, operating systems, computer languages, rapid evolution of the Internet, and improvements in integrating systems necessitate continuing review of software capabilities.

Programs for use in the piping and pressure-vessel areas are described in this appendix. The information was provided by courtesy of the software vendors.

The programs listed in Tables E9.1 through E9.14 may undergo considerable changes in the future. The user is cautioned to check and verify applicability of the computer program and its version prior to using.

TABLE E9.1 Pipe Stress Analysis Programs

Program title	Applications/capabilities	Contact
ADL Pipe	Windows 95 GUI version of well-respected software program. Nuclear Class 1 Piping Analysis, extensive piping code library and features.	Research Engineers 714-974-2500 *info@reiusa.com*
AutoPipe	Windows 95 GUI version with graphical model building, including options cut, copy and paste, multiple loadings, wave loads, and nonlinear pipe/soil interaction. 2-way interface with PlantFLO, PULS, AutoPLANT Designer, PDS, and PASCE.	Rebis 510-933-2525 *info@rebis.com.*
CAESAR II	Established Windows-based program for the design and analysis of above and below ground piping and pipe and structure systems. Windows-based, with CADWorx bidirectional link.	COADE, Inc. 281-890-4566 *query@coade.com.*
PipePak	Easy-to-use, quick static and dynamic analysis of complex piping networks.	Algor, Inc. 412-967-2700 *info@algor.com.*
Simflex	Nonnuclear piping applications for weight, pressure, thermal, occasional, and dynamic loads. Established, thorough program using keyword input for simplified piping modeling.	Peng Engineering 713-462-7390 *lcpeng@aol.com.*
Triflex	Piping stress, design, and analysis. Includes code compliance reports for many international piping codes. Linear and nonlinear modeling of pipe, structure, equipment and soils.	AAA Technology & Specialties Co., Inc. 713-849-3366 *info@aaatech.com.*
CAEPipe	Windows 95, NT/DOS version, performs static and dynamic analyses and checks for code compliance (ASME, B31, British, Canadian, Swedish). (WRC, NEMA, API, etc.) Year 2K compliant. Versions available for nuclear applications.	SST Systems, Inc. 408-452-8111 *info@sstusa.com*
Pipestress (DOS/Unix)	Performs static & dynamic analysis of nuclear and nonnuclear piping systems. Can be provided with data translators. For advanced Nuclear Piping Stress Analysis (including, Nuclear QA, class 1/2/3).	SST Systems, Inc. 408-452-8111 *info@sstusa.com*
NuPipe	For nuclear as well as nonnuclear applications for weight, pressure, thermal, occasional, and dynamic loads.	Nuclear Services Corp. Campbell, CA
ME 101	For nuclear as well as nonnuclear applications for weight, pressure, thermal, occasional, and dynamic loads.	Bechtel Software, Inc. 50 Beale Street San Francisco, CA 94105-1595 415-768-8947 *bsi@bechtel.com*
T Pipe	For nuclear as well as nonnuclear applications for weight, pressure, thermal, occasional, and dynamic loads.	PMB Systems Engineering, Inc. 500 Sansome Street San Francisco, CA 94111 415-986-4166
Super Pipe	For nuclear as well as nonnuclear applications for weight, pressure, thermal, occasional, and dynamic loads.	EDS Nuclear, Inc. San Francisco, CA

TABLE E9.2 Computer-Aided Design and Drafting

Program title	Applications/capabilities	Contact
AutoPLANT 97	3D CAD plant design and modeling software. Object-oriented technology with external database links, spec-driven fitting-to-fitting polyline routing and component placement.	Rebis 510-933-2525 *info@rebis.com.*
AutoSTAAD/Pro	Model generation, verification drafting, and detailing within AutoCAD.	Research Engineers 714-974-2500 *info@reiusa.com*
CADWorx/Pipe	AutoCAD-based, intuitive piping CAD package with bidirectional transfer link to CAESAR II. Operates in 2d, 3d, ortho, iso, or solid modes. Auto-routing, BOM's.	COADE, Inc. 281-890-4566 *query@coade.com.*
Intergraph Plant Design System 6.3 (PDS[tm])	Market-leading interactive piping design, specification, P&ID, clash-detection and ISO-creation software. (1997–54.3% market share according to Daratech, Inc.) PDS Runs on Windows NT Operating System.	Intergraph Corporation 800-260-0245 *Fjoop@ingr.com*
MiniCAD	General purpose 2D and 3D CAD program that includes a complete library of piping and process–design symbols.	Diehl Graphsoft, Inc. 410-290-5114 *marketing@ diehlgraphsoft.com*
Multi-Steel	Structural steel–drafting and modeling application. 2D frames can be combined into 3D models, and contains seven steel-section libraries. Links for stress analysis and for CAD imports to AutoPLANT.	Rebis 510-933-2525 *info@rebis.com.*
PPP-Pro Bundle	Complete piping and structural–design and drafting programs and symbol libraries for use with AutoCAD.	CAD Technology Corp. 704-369-3979
Solid Pipe Designer	AutoCAD-based 3D solid modeling of process piping systems designed specifically for sanitary, high purity, HVAC and general piping systems used in the semiconductor, pharmaceutical, biotechnology, food, beverage, and dairy industries.	UHP Process Piping, Inc. 972-247-8530 *gary.greer@uhppp.com*
Vessel Drafting Program	Automatically generates fabrication/as-built drawings of pressure vessels and heat exchangers.	Codeware 281-497-5705 *john@codeware.com*
Multi-Frame	3D structural analysis and design software system.	Formation Design Systems, Inc. 408-440-0702 *info@formsys.com*
PlantSpace	Object-oriented software. 3D CAD Software.	Jacobus 800-724-8741 *info@jacobus.com*

TABLE E9.3 Heat-Exchanger Programs

Program title	Applications/capabilities	Contact
Iris* Exchanger	Interactive and graphical design & analysis of TEMA shell and tube heat exchangers.	EDAC, Inc. 281-437-1155 *iris@edacsoft.com*
B-Jac Hetran	Thermal design of shell & tube heat exchangers, single phase, condensers, vaporizers, falling film evaporators, and thermosiphons supported.	Aspen Tech 804-897-4150 *info@aspentech.com*
B-Jac Teams	Mechanical design of shell & tube heat exchangers. ASME, Codap, ADM Codes. Detailed cost estimating and drawings.	Aspen Tech 804-897-4150 *info@aspentech.com*
HTRI Programs	Eleven programs for the rating and simulating of air- and liquid-cooled exchangers, condensers, reboilers & fire heaters. Single- and two-phone applications and tube-bundle vibrations.	Heat Transfer Research, Inc. 409-260-6200 *htri@htri-net.com*
TRI*Therm	Performs thermodynamic design and rerating of shell and tube heat exchangers. Handles 2-phase fluids with integral VLE module. Has built-in fluid property database.	AAA Technology & Specialties Co., Inc. 713-849-3366 *info@aaatech.com*
TRI*AC	Performs forced air–cooled heat exchanger design & analysis with built-in fluid property & VLE.	AAA Technology & Specialties. Co., Inc. 713-849-3366 *info@aaatech.com*
Compress 6.0	Windows 95 NT version for design, rating, cost analysis, drafting of ASME Section VIII pressure vessels and heat exchangers.	Codeware 281-497-5705 *john@codeware.com*

TABLE E9.4 Network Fluid Flow Programs

Program title	Applications/capabilities	Contact
AFT Impulse 1.0.	Windows-based, transient fluid-flow analysis. Drag & drop model construction, cavitation, and multipipe interaction.	Applied Flow Technology 719-686-1000 *info@aft.com.*
AFT Fathom 3.0	Windows-based, steady-state incompressible flow analysis. Drag & drop model construction with integrated heat-transfer analysis.	Applied Flow Technology 719-686-1000 *info@aft.com*
BOS Fluids	Steady-state and transient liquid and gas simulator for 3D piping geometries. Computes unbalanced forces due to valve closure and acoustic frequencies.	Paulin Research Group 281-363-3790 *info@paulin.com.*
Pipe-Flo	Windows-based. Unlimited size version of Pipe-Flo Lite. Performs steady-state line sizing, pump selection, etc. Interacts with orifice- and compressor-sizing programs.	Engineered Software, Inc. 800-786-8545 *Sales@eng-software.com*
PlantFLOW	Steady-state piping flow analysis in 3D for gas or liquid systems; includes heat transfer, gas equations of state, and graphical model building.	Rebis 510-933-2525 *info@rebis.com.*
AFT Arrow	Windows-based. Steady-state compressible fluid-flow analysis. Drag & drop model construction. Models complex gas networks.	Applied Flow Technology 719-686-1000 *info@aft.com*

TABLE E9.5 Pressure-Vessel Design Programs

Program title	Applications/capabilities	Contact
Advanced Pressure Vessel	ASME Section VIII Div. 1 pressure-vessel calculations. Ability to perform nozzle-loading calculations per WRC-107.	Computer Engineering, Inc. 800-473-1976 *Sales@ computereng.com*
CodeCalc	ASME Section VIII, Div. 1 vessel and heat-exchanger component analysis and design. TEMA, WRC 107, and some piping components. Windows-based.	COADE, Inc. 281-890-4566 *Query@coade.com*
Compress	32 bit Windows, 3D graphic ASME Section VIII Div. 1 and TEMA designs for vertical and horizontal pressure vessels. Produces hypertext-linked output reports.	Codeware 281-497-5705 *john@codeware.com.*
Iris*Calc	ASME Section VIII, Div. 1 Interactive design and analysis of pressure-vessel and heat-exchanger components.	EDAC, Inc. 281-437-1155 *iris@edacsoft.com.*
Iris*Vessel	ASME Section VIII, Div. 1 Interactive and graphical design of vertical and horizontal pressure vessels.	EDAC, Inc. 281-437-1155 *iris@edacsoft.com*
PV Elite	Designs and rates multicomponent vertical and horizontal vessels subject to a variety of loadings. Designs per ASME Section VIII, Div. 1 and 2, and BS 5500. Windows-based.	COADE, Inc. 281-890-4566 *query@coade.com.*
Vessel Coster	Estimates material and labor for pressure-vessel fabrication. Includes complete design ability and is written in Visual Basic for Windows.	Codeware 281-497-5705 *john@codeware.com*

TABLE E9.6 Specialty Finite Element Analysis Program

Program title	Applications/capabilities	Contact
FE/Pipe	Specialty brick, shell, beam, and axisymetric finite element program specializing in ASME Code output reports, automatic input, stress intensification, flexibility, and allowable load computation for nozzles and supports on pressure vessels and piping.	Paulin Research Group 281-363-3790 *info@paulin.com.*

TABLE E9.7 Structural Steel Evaluation Programs

Program title	Applications/capabilities	Contact
FrameWorks Plus	Design steel structures in both 2D and 3D. Provides integration with 3rd-party analysis tools, including GTSTRUDL and STAAD. Runs on Windows NT operating system.	Intergraph Corporation 800-260-0245 *fjoop@ingr.com*
QSE	Imported from Europe, provides analysis and design modules for frame structures. Incorporates many European and American codes for both steel and concrete.	Research Engineers 714-974-2500 *info@reiusa.com*
STAAD-III	Multimedia version allows audio-visual clips and walk-thrus, analysis, design, and verification, taking full advantage of Windows functionality. Full AISC code checking.	Research Engineers 714-974-2500 *info@reiusa.com*
STAAD/Pro	Next level of STAAD-III. Model development, analysis, design, drafting, & component design.	Research Engineers 714-974-2500 *info@reiusa.com*

TABLE E9.8 Flow Analysis Tools Programs

Program title	Applications/capabilities	Contact
C-Max	32-bit Windows-based software for flow-system analysis. Includes compressor, pump, pipe, fan, blower, and energy-conservation modules. Windows-based calculation includes evaluation of energy costs.	Unicade, Inc. 425-747-0353 *unicade@unicade.com*
Con-Flow	Selects, evaluates, and analyzes control valves using catalogs available on disk. Windows-based.	Engineered Software, Inc. 800-786-8545 *Sales@ eng-software.com*
Crane Companion	Windows version of Crane Technical Paper 410.	Crane Valve Group 630-226-4900 *www.cranevalve.com*
Ori-Flow	Sizes and analyzes flat-plate orifices, nozzles-and venturi tubes for fluid-metering applications. Windows-based.	Engineered Software, Inc. 800-786-8545 *sales@ eng-software.com*
PETS	Process engineering tools—Single- and two-phase pressure drops, orifice sizing, RV sizing, tray hydraulics, and more. Windows-based, and automates many repetitive flow-related calculations.	Stratus Engineering 281-335-7138 *dfsstratus@aol.com*
Pipe-Flo Lite	For small systems, up to 25 pipelines. Steady-state flow analysis and sizing of pumps and connected piping. Windows interface.	Engineered Software, Inc. 800-786-8545 *Sales@ eng-software.com*
Pipe-Flow-Stock	Provides balanced pressure and flow calculations for piping systems used in the pulp and paper industry. Uses TAPPI method for pressure drop calculation. Windows-based.	Engineered Software, Inc. 800-786-8545 *Sales@ eng-software.com*
Pump-Flow	Selects, evaluates, and analyzes centrifugal pumps using manufacturers' pump catalogs available on disk. Over 40 manufacturers to choose from. Windows-based.	Engineered Software, Inc. 800-786-8545 *Sales@ eng-software.com*
BOS Fluids	2d CFD applications for horizontal vessels, tanks, and slug loads. Developed slug-velocity diagrams.	Paulin Research Group 281-363-3790 *info@paulin.com*

TABLE E9.9 Tank Programs

Program title	Applications/capabilities	Contact
E-Tank	Designs API 650 & 620 tanks, UL 142 tanks, and rates per API 653. Comprehensive reports are generated.	Techdata 281-497-5705 *www.techdat.com*
Tank	Designs or rerates API 650/653 storage tanks. Addresses wind girders, conical roofs, stainless-steel materials, allowed fluid heights, and remaining corrosion allowance.	COADE, Inc. 281-890-4566 *query@coade.com*

TABLE E9.10 Computational Fluid Dynamics Programs

Program title	Applications/capabilities	Contact
CFD-ACE+	Advanced computing environment for modeling flow, turbulence, conjugate heat transfer, and associated physics. Highly automated parametric geometry and grid generation with high accuracy numerics.	CFD Research Corp. 205-726-4800 *info@cfdrc.com*
COMIG	Detailed blade-geometry design for centrifugal impellers and rotors. Allows fluid-dynamic designer to produce highly efficient blade shapes.	Northern Research & Engineering Corporation 781-935-9050 *sales@nrec.com*
Phoenix	Simulates laminar, turbulent, thermal- and chemically reactive flows. Includes particle tracking, multiphase flow, non-Newtonian fluids, and user programmability.	Phoenics North America 770-996-8656 *adamgreen@sprynet.com.*
PREDIG	Performance prediction of centrifugal compressors. Produces performance maps based on overall geometry and fluid characteristics.	Northern Research & Engineering Corporation 781-935-9050 *sales@nrec.com*
VISIUN	Computational Fluid Dynamics analysis tool for turbomachinery. Specialized, full 3D, Navier-Stokes analysis of internal flows, including two frame-of-reference analyses of rotating-stationary interactions.	Northern Research & Engineering Corporation 781-935-9050 *sales@nrec.com*
BOS Fluids	Simplified 2d models for horizontal vessels, tanks, and some slug applications.	Paulin Research Group 281-363-3790 *info@paulin.com*

TABLE E9.11 Thermal and Power System Process Programs

Program title	Applications/capabilities	Contact
QTPro^2	General-purpose ‘‘handbook’’ for thermodynamics and heat-transfer calculations related to the power and cogeneration industries.	Thermoflow, Inc. 978-579-7999 *info@thermoflow.com*
Thermoflex	General-purpose modeling of thermal and power-system processes for both the power and cogeneration industries.	Thermoflow, Inc. 978-579-7999 *info@thermoflow.com.*

TABLE E9.12 Maintenance Programs

Program title	Applications/capabilities	Contact
Avert	Designed to manage maintenance, repair, inspection, and testing data for pressure safety–relief valves. Includes Process Safety Management requirements of OSHA 1910.119.	Avert Systems 403-261-3931 *avert@telusplanet.net*

TABLE E9.13 Welding Programs

Program title	Applications/capabilities	Contact
Welding Pro-Write	Creates and maintains WPS, PQR, and WPQ in accordance with ASME Section IX. Welder management included. Also includes ASME Code checking.	Computer Engineering, Inc. 800-473-1976 *sales@ computereng.com.*

TABLE E9.14 Measurement Programs

Program title	Applications/capabilities	Contact
Conduit Corrosion Monitor	Integrates with Krautkramer Branson Pipe+ database, and has direct integration with a number of KB instruments. Provides access to many standard databases and is ANSI SQL–compliant. Windows design.	Conduit Limited Inc. 713-447-8290 *conduit@iapc.net*

APPENDIX E10

INTERNATIONAL STANDARDS AND SPECIFICATIONS

Soami D. Suri, P.E.
Senior Engineer
Bechtel Power Corporation
Frederick, Maryland

TABLE E10.B1 British Standards and Specifications for Pipe, Tube, and Fittings

Numbers	Title
BSI BS 21	1985 Amd 1 Pipe Threads for Tubes and Fittings Where Pressure-Tight Joints Are Made on the Threads (Metric Dimensions) AMD 6633; Dec. 21, 1990
BSI BS 61	1969 Amd 1 Threads for Light Gauge Copper Tubes and Fittings
BSI BS 143 & 1256	1986 Amd 2 Malleable Cast Iron and Cast Copper Alloy Threaded Pipe Fittings (AMD 6632) Dec. 21, 1990 (Partially Replaced by BS EN 10242: 1995 but Remains Current)
BSI BS 143 & 1256	1986 Amd 3 Malleable Cast Iron and Cast Copper Alloy Threaded Pipe Fittings (AMD7692) April 15, 1993 (Partially Replaced by BS EN 10242: 1995 but Remains Current)
BSI BS 143 & 1256	1986 Amd 4 Malleable Cast Iron and Cast Copper Alloy Threaded Pipe Fittings (AMD 8467) Sept. 15, 1995 (E) (Partially Replaced by BS EN 10242: 1995 but Remains Current)
BSI BS 806: ENQ CASE 4	1989 Design and Construction of Ferrous Piping Installations for and in Connection with Land Boilers Enquiry Cases: Enquiry Case 4: EFW Alloy Pipe for Wet Steam Application
BSI BS 806: ENQ CASE 6	1991 Design and Construction of Ferrous Piping Installations for and in Connection with Land Boilers Enquiry Cases: Enquiry Case 6: Use of Buttwelding Pipe Fittings
BSI BS 806: ENQ CASE 7	1991 Design and Construction of Ferrous Piping Installations for and in Connection with Land Boilers Enquiry Cases: Enquiry Case 7: Testing of Pipe Bends
BSI BS 949: PART 3	1993 Screwing Taps Part 3: Specification for Pipe Thread Taps (E)
BSI BS 949: PART 3	1993 Amd 1 Screwing Taps Part 3: Specification for Pipe Thread Taps AMD 7927; Sept. 15, 1993; (E)
BSI BS 949: PART 3	1982 Screwing Taps: Part 3: Specification for Taps for Pipe Threads (G Series, Rp Series and Rc Series)
BSI BS 1042: SEC 1.2	1989 Methods of Measurement of Fluid Flow in Closed Conduits: Pt 1: Pressure Differential Devices: Section 1.2: Specification for Squared-Edged-Orifice Plates and Nozzles (with Drain Holes, in Pipe Below 50 mm Diameter, as Inlet and Outlet Devices) and other Orifice Plates
BSI BS 1042: SEC 1.6	1993 Measurement of Fluid Flow in Closed Conduits Part 1: Pressure Differential Devices Section 1.6: Method of Measurement of Pulsating Fluid Flow in a Pipe, by Means of Orifice Plates, Nozzles or Venturi Tubes (ISO TR 3313: 1992) (Q)

TABLE E10.B1 British Standards and Specifications for Pipe, Tube, and Fittings *(Continued)*

Numbers	Title
BSI BS 1113: ENQ CASE 5	1988 Design and Manufacture of Water-Tube Steam Generating Plant (Including Superheaters, Reheaters and Steel Tube Economizers) Enquiry Case 5: British Standard Forging and Pipe Materials
BSI BS 1127: PART 2	1990 Screwing Dies and Dienuts Part 2: Hand-and-Machine-Operated Circular Screwing Dies for Taper Pipe Threads; R Series
BSI BS 1127: PART 3	1990 Screwing Dies and Dienuts Part 3: Hand-and-Machine-Operated Circular Screwing Dies for Parallel Pipe Threads; G Series
BSI BS 1387	1987 Amd 1 Screwed and Socketed Steel Tubes and Tubulars and for Plain End Steel Tubes Suitable for Welding or for Screwing to BS 21 Pipe Threads (AMD 5830) May 31, 1989
BSI BS 1600	1991 Dimensions of Steel Pipe for Petroleum Industry (Q)
BSI BS 1600	1991 Amd 1 Dimensions of Steel Pipe for the Petroleum Industry (AMD 7204) June 15, 1992 (Q)
BSI BS 1640: PART 1	1962 Amd 3 Steel Butt-Welding Pipe Fittings for the Petroleum Industry Part 1: Wrought Carbon and Ferritic Alloy Steel Fittings
BSI BS 1640: PART 2	1962 Amd 3 Steel Butt-Welding Pipe Fittings for the Petroleum Industry Part 2: Wrought and Cast Austenitic Chromium-Nickel Steel Fittings
BSI BS 1640: PART 3	1968 Amd 1 Steel Butt-Welding Pipe Fittings for the Petroleum Industry Part 3: Wrought Carbon and Ferritic Alloy Steel Fittings
BSI BS 1640: PART 4	1968 Steel Butt-Welding Pipe Fittings for the Petroleum Industry Part 4: Wrought and Cast Austentic Chromium-Nickel Steel Fittings
BSI BS 1740: PART 1	1971 Amd 3 Wrought Steel Pipe Fittings (Screwed BSP Threads) Part 1: Metric Units (AMD 6240) May 31, 1990
BSI BS 1965: PART 1	1963 Amd 2 Butt-Welding Pipe Fittings for Pressure Purposes Part 1: Carbon Steel
BSI BS 2051: PART 1	(OBSOLESCENT) 1973 Amd 2 Tube and Pipe Fittings for Engineering Purposes Part 1: Copper and Copper Alloy Capillary and Compression Tube Fittings for Engineering Purposes
BSI BS 2051: PART 2	(OBSOLESCENT) 1984 Tube and Pipe Fittings for Engineering Purposes Part 2: Specification for Olive Type Copper Alloy Compression Tube Fittings
BSI BS 2494	1990 Elastomeric Seals for Joints in Pipework and Pipelines

TABLE E10.B1 British Standards and Specifications for Pipe, Tube, and Fittings *(Continued)*

Numbers	Title
BSI BS 2779	1986 Pipe Threads for Tubes and Fittings Where Pressure-Tight Joints are Not Made on the Threads (Metric Dimensions)
BSI BS 2782: PT11: METH 1103A&B	1995 Plastic Piping and Ducting Systems-Injection-Moulded Thermoplastics Fittings—Test Method for Visually Assessing Effects of Heating (V)
BSI BS 2782: PT11: METH 1103V	1995 Plastic Piping and Ducting Systems—Thermoplastic Pipe and Fittings—Determination of Vicat Softening Temperature (VST) (See BS EN 727) (V)
BSI BS 2782: PT11: METH 1108T	1997 Plastics Piping Systems—Polyethylene (PE) Tapping Tees—Test Method for Impact Resistance of an Assembled Tapping Tee Also Known as BS EN 1716: 1997; (V)
BSI BS 2782: PT11: METH 1112L, M, N, Q	1996 Plastic Piping Systems—Thermoplastics Piping Systems for Buried Non-Pressure Applications—Test Methods for Leaktightness of Elastomeric Sealing Ring Type Joints (V)
BSI BS 2782:PT11: METH 1114F	1995 Plastics Piping and Ducting Systems—Injection-Moulded Thermoplastics Fittings for Pressure Piping Systems—Test Method for Maximum Deformation by Crushing (See BS EN 802) (V)
BSI BS 2782: PT11: METH 1123B	1995 Plastics Piping Systems—Mechanical Joints Between Fittings and Polyolefin Pressure Pipes—Test Method for Leaktightness Under Internal Pressure of Assemblies Subjected to Bending (SEE BS EN 713) (V)
BSI BS 2782: PT11: METH 1123B	1995 Amd 1 Plastics Piping Systems—Mechanical Joints Between Fittings and Polyolefin Pressure Pipes—Test Method for Leaktightness Under Internal Pressure of Assemblies Subjected to Bending (AMD 8876) Oct. 15, 1995 (SEE BS EN 713) (V)
BSI BS 2782: PT11: METH 1123F	1995 Thermoplastics Piping Systems—Non-End-Load-Bearing Elastomeric Sealing Ring Type Joints Between Pressure Pipes and Moulded Fittings—Test Method for Leaktightness Under Internal Hydrostatic Pressure without End Thrust (See BS EN 714) (V)
BSI BS 2782: PT11: METH 1123G	1995 Thermoplastics Piping Systems—End-Load-Bearing Joints Between Small Diameter Pressure Pipes and Fittings—Test Method for Leaktightness Under Internal Water Pressure, Including End Thrust (See BS EN 715) (V)
BSI BS 2782: PT11: METH 1123J	1995 Plastics Piping Systems—Injection-Moulded Thermoplastics Fittings for Elastic Sealing Ring Type Joints for Pressure Piping—Test Methods for Resistance to Short-Term Internal Pressure Without End Thrust (See BS EN 803) (V)

TABLE E10.B1 British Standards and Specifications for Pipe, Tube, and Fittings *(Continued)*

Numbers	Title
BSI BS 2782:PT11: METH 1123K	1995 Plastics Piping Systems—Injection-Moulded Socket Fittings for Solvent-Cemented Joints for Pressure Piping—Test Method for Resistance to a Short-Term Internal Hydrostatic Pressure (See BS EN 804) (V)
BSI BS 2782:PT11: METH 1123W	1996 Plastic Piping Systems-Elastomeric Sealing Ring Type Joints and Mechanical Joints for Thermoplastic Pressure Piping-Test Method for Leaktightness Under External Hydrostatic Pressure (V)
BSI BS 2782:PT12: METH 1123A&B	1997 Plastics Piping Systems—Glass-Reinforced Thermosetting Plastics (GRP) Pipes and Fittings—Test Methods to Prove the Leaktightness of the Wall Under Short-Term Internal Pressure (V)
BSI BS 2782:PT12: METH 1123C	1996 Plastics Piping Systems—Joints for Glass Reinforced Thermosetting Plastics (GRP) Pipes and Fittings—Test Methods for Leaktightness and Resistance to Damage of Flexible and Reduced-Articulation Joints (V)
BSI BS 3506	1969 Amd 2 Unplasticized PVC Pipe for Industrial Purposes
BSI BS 3799	1974 Amd 2 Steel Pipe Fittings, Screwed and Socket-Welding for the Petroleum Industry (AMD 5518) March 31, 1987
BSI BS 3867	(OBSOLESCENT) 1987 Method of Specifying Outside Diameters and Pressure Ratings for Pipe of Thermoplastics Materials (Inch Series) Partially Superseded by BS ISO 11922-2: 1997, BS 2782: Part 11: Method 1121 C: and BS ISO 4065: 1996
BSI BS 3908: PART 1	1965 Amd 1 Methods for Sampling and Analysis of Lead and Lead Alloys Part 1: Sampling of Ingot Lead, Lead Alloy Ingots, Sheet Pipe, and Cable Sheathing Alloys
BSI BS 3958: PART 4	1982 Thermal Insulating Materials Part 4: Bonded Preformed Man-Made Fibre Pipe Sections
BSI BS 4346: PART 1	1969 Amd 5 Joints and Fittings for Use With Unplasticized PVC Pressure Pipes Part 1: Injection Moulded Unplasticized PVC Fittings for Solvent Welding for Use with Pressure Pipes, Including Potable Water Supply
BSI BS 4346: PART 2	1970 Amd 3 Joints and Fittings for Use with Unplasticized PVC Pressure Pipes Part 2: Mechanical Joints and Fittings Principally of Unplasticized PVC
BSI BS 4346: PART 3	1982 Amd 1 Joints and Fittings for Use with Unplasticized PVC Pressure Pipes Part 3: Solvent Cements

TABLE E10.B1 British Standards and Specifications for Pipe, Tube, and Fittings *(Continued)*

Numbers	Title
BSI BS 4728	(OBSOLESCENT) 1971 Determination of the Resistance to Constant Internal Pressure of Thermoplastics Pipe Replaced by BS EN 921: 1995
BSI BS 4991	1974 Amd 2 Propylene Copolymer Pressure Pipe
BSI BS 5254	1976 Amd 2 Polypropylene Waste Pipe and Fittings (External Diameter 34.6 mm, 41.0 mm and 54.1 mm) (AMD 4438) Dec. 30, 1983
BSI BS 5255	1989 Thermoplastics Waste Pipe and Fittings
BSI BS 5391: PART 1	1976 Acrylonitrile Butadiene-Styrene (ABS) Pressure Pipe Part 1: Pipe for Industrial Uses
BSI BS 5392: PART 1	1976 Acrylonitrile Butadiene-Styrene (ABS) Fittings for use With ABS Pressure Pipe Part 1: Fittings for Use with Pipe for Industrial Uses
BSI BS 5422	1990 Method for Specifying Thermal Insulating Materials on Pipes, Ductwork and Equipment (In Temperature Range 40 Degrees Celsius to +700 Degrees Celcius)
BSI BS 5480	1990 Glass Reinforced Plastics (GRP) Pipes, Joints and Fittings for use for Water Supply or Sewerage
BSI BS 5481	1977 Amd 2 Unplasticized PVC Pipe and Fittings for Gravity Sewers
BSI BS 5500: ENQ CASE 112	1996 Enquiry Case: Case 112: Use of API 5L Pipe Material (Q)
BSI BS 5556	(OBSOLESCENT) 1978 General Requirements for Dimensions and Pressure Ratings for Pipe of Thermoplastics Materials (Metric Series) Replaces BS 4159: 1967; Partially superseded by BS ISO 11922-1: 1997, BS 2782: Part 11: Method 1121B and BS ISO 4065
BSI BS 5608	1993 Preformed Rigid Polyurethane (PUR) and Polyisocyanurate (PIR) Foams for Thermal Insulation of Pipework and Equipment (E)
BSI BS 5608	1986 Preformed Rigid Polyurethane (PUR) and Polyisocyanurate (PIR) Foams for Thermal Insulation of Pipework and Equipment
BSI BS 5627	1984 Amd 1 Plastic Connectors for Use With Horizontal Outlet Vitreous China WC Plans
BSI BS 5844	1980 Measurement of Fluid Flow: Estimation of Uncertainty of a Flow rate Measurement
BSI BS 5970	1992 Thermal Insulation of Pipework and Equipment (in the Temperature Range −100 Degrees C to +870 Degrees C)
BSI BS 5970	1981 Amd 1 Thermal Insulation of Pipework and Equipment (in the Temperature Range −100 Degrees C to +870 Degrees C)

TABLE E10.B1 British Standards and Specifications for Pipe, Tube, and Fittings *(Continued)*

Numbers	Title
BSI BS 6209	1982 Solvent Cement for Non-Pressure Thermoplastics Pipe Systems
BSI BS 6281: PART 3	1982 Devices Without Moving Parts for the Prevention of Contamination of Water by Backflow Part 3: Pipe Interrupters of Nominal Size up to and Including DN 42
BSI BS 6362	1990 Stainless Steel Tubes Suitable for Screwing in Accordance with BS 21 Pipe Threads for Tubes and Fittings Where Pressure-Tight Joints are Made on the Threads
BSI BS 7605: PART 2	1992 Agricultural Irrigation Equipment Part 2: Specification for Emitting Pipe Systems (ISO 9261: 1991)
BSI BS 7677	1993 Classification of Imperfections in Pipe Joint Rings (ISO 9691: 1992)
BSI BS 7838	1996 Corrugated Stainless Steel Semi-Rigid Pipe and Associated Fittings for Low Pressure Gas Pipework of up to 28 mm (R)
BSI BS 7892	1997 Bitumen Seal Coatings on Cement Mortar Linings in Ductile Iron Pipes and Fittings (W)
BSI BS 8010: PART 1	1989 Pipelines Part 1: Pipelines on Land: General (Replaces BS CP 2010: Part 1: 1966)
BSI BS EN 253	1995 Preinsulated Bonded Pipe Systems for Underground Hot Water Networks—Pipe Assembly of Steel Service Pipes, Polyurethane Thermal Insulation and Outer Casing of Polyethylene (E)
BSI BS EN 253	1991 Preinsulated Bonded Pipe Systems for Underground Hot Water Networks—Pipe Assembly of Steel Service Pipes, Polyurethane Thermal Insulation and Outer Casing of High Density Polyethylene
BSI BS EN 448	1995 Preinsulated Bonded Pipe Systems for Underground Hot Water Networks—Fitting Assemblies of Steel Service Pipes, Polyurethane Thermal Insulation and Outer Casing of Polyethylene (E)
BSI BS EN 476	1998 General Requirements for Components Used in Discharge Pipes, Drains and Sewers for Gravity Systems (R)
BSI BS EN 489	1995 Preinsulated Bonded Pipe Systems for Underground Hot Water Networks—Joint Assembly for Steel Service Pipes, Polyurethane Thermal Insulation and Outer Casing of Polyethylene (E)
BSI BS EN 681-1	1996 Elastomeric Seals—Material Requirements for Pipe Joint Seals Used in Water and Drainage Applications Part 1: Vulcanized Rubber (E)

TABLE E10.B1 British Standards and Specifications for Pipe, Tube, and Fittings *(Continued)*

Numbers	Title
BSI BS EN 911	1996 Plastic Piping Systems—Elastomeric Sealing Ring Type Joints and Mechanical Joints for Thermoplastics Pressure Piping—Test Method for Leaktightness Under External Hydrostatic Pressure (V)
BSI BS EN 1277	1996 Plastic Piping Systems—Thermoplastics Piping Systems for Buried Non-Pressure Applications—Test Methods for Leaktightness of Elastomeric Sealing Ring Type Joints (V)
BSI BS EN ISO 8497	1997 Thermal Insulation-Determination of Steady-State Thermal Transmission Properties of Thermal Insulation for Circular Pipes (R)
BSI BS EN ISO 11961	1997 Petroleum and Natural Gas Industries—Steel Pipes for Use as Drill Pipe–Specification (Q)
BSI BS 864: PART 2	1983 Amd 2 Capillary and Compression Tube Fittings of Copper and Copper Alloy Part 2: Capillary and Compression Fittings for Copper Tubes (AMD 5651) April 30, 1987
BSI BS 864: PART 2	1983 Amd 3 Capillary and Compression Tube Fittings of Copper and Copper Alloy Part 2: Specification for Capillary and Compression Fittings for Copper Tubes (AMD 7067) Feb. 28, 1992
BSI BS 864: PART 3	(OBSOLESCENT) 1975 Capillary and Compression Tube Fittings of Copper and Copper Alloy Part 3: Compression Fittings for Polyethylene Pipes
BSI BS 864: PART 5	1990 Capillary and Compression Tube Fittings of Copper and Copper Alloy Part 5: Compression Fittings for Polyethylene Pipes with Outside Diameters to BS 5556
BSI BS 1113	1992 Design and Manufacture of Water-Tube Steam Generating Plant (Including Superheaters, Reheaters and Steel Tube Economizers) (Q)
BSI BS 1113	1992 Amd 1 Design and Manufacture of Water-Tube Steam Generating Plant (Including Superheaters, Reheaters and Steel Tube Economizers) (AMD 7167) June 15, 1992 (Q)
BSI BS 1113	1992 Amd 2 Design and Manufacture of Water-Tube Steam Generating Plant (Including Superheaters, Reheaters and Steel Tube Economizers) (AMD 8178) June 15, 1994 (Q)
BSI BS 1113	1989 Amd 4 Design and Manufacture of Water-Tube Steam Generating Plant (Including Superheaters, Reheaters and Steel Tube Economizers) (Q) (AMD 6717) May 31, 1991
BSI BS 1113: ENQ CASE INTRO	1994 Design and Manufacture of Water-Tube Steam Generating Plant (Including Superheaters, Reheaters and Steel Tube Economizers) Enquiry Cases-Introduction (Q)

TABLE E10.B1 British Standards and Specifications for Pipe, Tube, and Fittings *(Continued)*

Numbers	Title
BSI BS 1113: ENQ CASE 1	1986 Design and Manufacture of Water-Tube Steam Generating Plant (Including Superheaters, Reheaters and Steel Tube Economizers) Enquiry Case 1: Eddy Current Testing in Lieu of Hydraulic Testing
BSI BS 1113: ENQ CASE 2	1990 Design and Manufacture of Water-Tube Steam Generating Plant (Including Superheaters, Reheaters and Steel Tube Economizers) Enquiry Case 2: Use of ASTM A105, A106, A182, A234, A335, and A312 Materials (Q)
BSI BS 1113: ENQ CASE 3	1987 Design and Manufacture of Water-Tube Steam Generating Plant (Including Superheaters, Reheaters and Steel Tube Economizers) Enquiry Case 3: Local Loads
BSI BS 1113: ENQ CASE 4	1989 Design and Manufacture of Water-Tube Steam Generating Plant (Including Superheaters, Reheaters and Steel Tube Economizers) Enquiry Case 4: Methods for Manual Examination of Fusion Welds in Ferritic Steels
BSI BS 1113: ENQ CASE 6	1990 Design and Manufacture of Water-Tube Steam Generating Plant (Including Superheaters, Reheaters and Steel Tube Economizers) Enquiry Case 6: Use of BS 3604 591 Material
BSI BS 1113: ENQ CASE 7	1992 Design and Manufacture of Water-Tube Steam Generating Plant (Including Superheaters, Reheaters and Steel Tube Economizers) Enquiry Case 7: Use of Butt Welds in Tubes for Manufacture of Coils for Coil Type Boilers/Superheaters (Q)
BSI BS 1113: ENQ CASE 8	1992 Design and Manufacture of Water-Tube Steam Generating Plant (Including Superheaters, Reheaters and Steel Tube Economizers) Enquiry Case 8: Ultrasonic Acceptance Criteria (Q)
BSI BS 1113: ENQ CASE 9	1993 Design and Manufacture of Water-Tube Steam Generating Plant (Including Superheaters, Reheaters and Steel Tube Economizers) Enquiry Case 9: Welding Procedure Specification, Welding Procedure Approval and Welder Approval (Q)
BSI BS 1113: ENQ CASE 10	1995 Design and Manufacture of Water-Tube Steam Generating Plant (Including Superheaters, Reheaters and Steel Tube Economizers) Enquiry Case 10: Use of Steel 91 (Q)
BSI BS 1113: E/C 10: ISSUE 2	1996 Design and Manufacture of Water-Tube Steam Generating Plant (Including Superheaters, Reheaters and Steel Tube Economizers) Enquiry Case 10: Use of Steel 91 Tubing and Piping (Q)
BSI BS 1113: ENQ CASE 12	1996 Design and Manufacture of Water-Tube Steam Generating Plant (Including Superheaters, Reheaters and Steel Tube Economizers) Enquiry Case 12: Use of Steel 91 Forgings (Q)

TABLE E10.B1 British Standards and Specifications for Pipe, Tube, and Fittings *(Continued)*

Numbers	Title
BSI BS 1471	1972 Amd 2 Wrought Aluminium and Aluminium Alloys for General Engineering Purposes; Drawn Tube
BSI BS 1471	1972 Amd 3 Wrought Aluminium and Aluminium Alloys for General Engineering Purposes Drawn Tube (AMD 8424) Feb. 15, 1995 (V)
BSI BS 3074	1989 Nickel and Nickel Alloys: Seamless Tube
BSI BS 4300/1	1967 Amd 1 Specification (Supplementary Series) for Wrought Aluminium and Aluminium Alloys Longitudinally Welded Tube Metric Units (AMD 3381) June 30, 1980
BSI BS 4300/10	1969 Amd 1 Specification (Supplementary Series) for Wrought Aluminium and Aluminium Alloys for General Engineering Purposes/10: 5454 Drawn Tube
BSI BS 4300/12	1969 Amd 1 Specification (Supplementary Series) for Wrought Aluminium and Aluminium Alloys for General Engineering Purposes/12 5454 Bar, Extruded Round Tube and Sections
BSI BS 4300/15	1973 Amd 1 Specification (Supplementary Series) for Wrought Aluminium and Aluminium Alloys for General Engineering Purposes/15: 7020 Bar, Extruded Round Tube and Sections
BSI BS 4870: PART 3	1985 Amd 1 Approved Testing of Welding Procedures Part 3: Arc Welding of Tube to Tube-Plate Joints in Metallic Materials (AMD 6292) Feb. 28, 1990
BSI BS 4871: PART 3	1985 Approval Testing of Welders Working to Approved Welding Procedures Part 3: Arc Welding of Tube to Tube-Plate Joints in Metallic Materials
BSI BS 2070: PART 4	1991 Aluminium and Aluminium Alloy Wrought Products Technical Specification Part 4: Tube for Structures
BSI BS 2070: PART 5	1991 Aluminium and Aluminium Alloy Wrought Products Technical Specification Part 5: Tube Used Under Pressure
BSI BS EN 10232	1994 Metallic Materials—Tube (In Full Section)—Bend Test (V)
BSI BS EN 10233	1994 Metallic Materials—Tube-Flattening Test (V)
BSI BS EN 10234	1994 Metallic Materials—Tube-Drift Expanding Test (V)
BSI BS EN 10235	1994 Metallic Materials—Tube-Flanging Test
BSI BS 10236	1994 Metallic Materials—Tube-Ring Expanding Test (V)
BSI BS 10237	1994 Metallic Materials—Tube-Ring Tensile Test (V)
BSI BS EN ISO 9455-12	1994 Soft Soldering Fluxes—Test Methods Part 12: Steel Tube Corrosion Test (F)

TABLE E10.B1 British Standards and Specifications for Pipe, Tube, and Fittings *(Continued)*

Numbers	Title
BSI BS EN ISO 12185	1996 Methods of Test for Petroleum and Its Products Part 365: Crude Petroleum and Petroleum Products—Determination of Density—Oscillating U-Tube Method (ISO 12185: 1996) (W)
BSI BS ISO 8434-1	Metallic Tube Connections for Fluid Power and General Use–Part 1: 24 Degrees Compression Fittings (E)
BSI BS ISO 8434-2	1994 Metallic Tube Connections for Fluid Power and General Use–Part 2: 37 Degrees Flared Fitting (E)
BSI BS ISO 8434-3	1995 Metallic Tube Connections for Fluid Power and General Use–Part 3: O-Ring Face Seal Fittings (E)
BSI BS ISO 8434-4	1995 Metallic Tube Connections for Fluid Power and General Use–Part 4: 24 Degree Cone Connector with O-Ring Weld-On Nipples (E)
BSI B 27	1991 Copper-Zinc-Aluminium-Nickel-Silicon Alloy Tube
BSI 4L 54	1986 Amd 1 Tube of 99% Aluminium (Cold Drawn: Seamless: Tested Hydraulically) (Not exceeding 12 mm Wall Thickness) (AMD 5994) Aug. 31, 1988 (Replaces BS 3L 54: 1971)
BSI 4L 56	1986 Amd 1 Tube of Aluminium–2¼% Magnesium Alloy (Temper Designation–0) (Seamless: Tested Hydraulically) (Not Exceeding 12 mm Wall Thickness) (AMD 5993) Aug. 31, 1988 (Replaces BS 3L 56: 1971)
BSI 3L 63	1971 Tube of Aluminium-Copper-Magnesium-Silicon-Manganese Alloy (Solution Treated and Precipitation Treated) (Cu 4.4, Mg 0.5, Si 0.7, Mn 0.8)
BSI L 105	1971 Tube of Aluminium-Copper-Magnesium-Silicon-Manganese Alloy (Solution Treated and Aged at Room Temperature) (Not Exceeding 10 mm Wall Thickness) (Cu 4.4, Mg 0.5, Si 0.7, Mn 0.8) (Replaces BS 2L 62: 1961)
BSI L 114	1971 Tube of Aluminium-Magnesium-Silicon-Manganese Alloy (Solution Treated and Precipitation Treated)
BSI 2L 116	(OBSOLESCENT) 1985 Tube of 99% Aluminium (Cold Drawn: Seamless: Not Tested Hydraulically) (Not Exceeding 12 mm Wall Thickness) Replaces BS L 116: 1973)
BSI L 117	1975 Amd 1 Tube of Aluminium-Magnesium-Silicon-Copper-Chromium Alloy (Solution Treated and Artifically Aged: Not Tested Hydraulically) (Not Exceeding 10 mm Thickness) (Mg 1.0, Si 0.6, Cu 0.28, Cr 0.2)

TABLE E10.B1 British Standards and Specifications for Pipe, Tube, and Fittings *(Continued)*

Numbers	Title
BSI L 118	1975 Amd 2 Tube of Aluminium-Magnesium-Silicon-Copper-Chromium Alloy (Solution Treated and Artificially Aged: Tested Hydraulically) (Not Exceeding 10 mm Thickness) (Mg 1.0, Si 0.6, Cu 0.28, Cr 0.2)
BSI 2L 503	(OBSOLESCENT) 1973 Tube of Magnesium-6 Per Cent Aluminium-Zinc Alloy
BSI 2L 509	(OBSOLESCENT) 1973 Tube of Magnesium–1¼% Zinc-Zirconium Alloy (Suitable for Welding by Inert-Gas Shielded Arc Techniques) (Zn 1.25, Zr 0.6) (S)
BSI 5T 2	(OBSOLESCENT) 1972 4/1 Nickel-Chromium Steel Tube (1300 N/Square mm) Replaces BS 4T 2: 1948
BSI 4T 45	(OBSOLESCENT) 1972 Carbon-Manganese Steel Tube (700 N/Square mm) (Tube 12.5 mm Outside Diameter and Greater) (Weldable) (Replaces BS 3T 45: 1948)
BSI 3T 53	1980 Chromium-Molybdenum Steel Tube (700 Mpa) (Tube 12.5 mm Outside Diameter and Greater) (Weldable) (Replaces BS 2T 53: 1972)
BSI 2T 57	(OBSOLESCENT) 1972 4/1 Nickel-Chromium Steel Tube (1150 N/Square MM) (Replaces BS T 57: 1948)
BSI 3T 60	1980 Chromium-Molybdenum Steel Tube (1150 MPa) (Maximum Wall Thickness 8 mm) (Replaces BS 2T 60: 1972)
BSI T 64	(OBSOLESCENT) 1972 Carbon-Manganese Steel Tube (550 N/Square mm) (Tube Less than 12.5 mm Outside Diameter) (Weldable) (Replaces BS 3T 35: 1948)
BSI 2T 66	1980 18/10 Chromium-Nickel Corrosion-Resisting Steel Tube (Niobium Stabilized: 550 MPa) (Weldable)
BSI 2T 66	1980 Amd 1 18/10 Chromium-Nickel Corrosion-Resisting Steel Tube (Niobium Stabilized: 550 Mpa) (Weldable) (AMD 6853) Nov. 29, 1991 (Replaces BS T 66: 1972)
BSI T 67	(OBSOLESCENT) 1972 18/10 Chromium-Nickel Corrosion-Resisting Steel Tube (Titanium mm) (Weldable) (Replaces BS T 55: 1948)
BSI 2T 68	1980 Cold Drawn 18/10 Chromium-Nickel Corrosion-Resisting Steel Tube (Niobium Stabilized: 800 N/Square mm) (Weldable) (Replaces BS T 68: 1972)
BSI T 69	(OBSOLESCENT) 1972 Cold Drawn 18/10 Chromium-Nickel Corrosion-Resisting Steel Tube (Titanium Stabilized: 800 N/Square MM) (Weldable) (Replaces BS T 58: 1948)

TABLE E10.B1 British Standards and Specifications for Pipe, Tube, and Fittings *(Continued)*

Numbers	Title
BSI T 72-73	1977 18/10 Chromium-Nickel Corrosion Resisting Steel Tube for Hydraulic Purposes (Niobium/Titanium Stabilized: 550 MPa)
BSI T 72-73	1977 Amd 1 18/10 Chromium-Nickel Corrosion Resisting Steel Tube for Hydraulic Purposes (Niobium/Titanium Stabilized: 550 MPa) (AMD 6852) Dec. 24, 1991
BSI T 74	(OBSOLESCENT) 1972 Low Carbon 18/10 Chromium-Nickel Corrosion-Resisting Steel Tube (500 N/Square mm)
BSI T 75	(OBSOLESCENT) 1972 Low Carbon 17/12 Chromium-Nickel-Molybdenum Corrosion-Resisting Steel Tube (500 N/Square MM)
BSI T 76	1978 Amd 1 Chromium-Molybdenum Steel Tube (770 MPa) (Weldable)
BSI T 77	1980 Chromium-Molybdenum Steel Tube (900 MPa) (Weldable) Replaces BS T 65: 1972)
BSI BS 65	1991 Vitrified Clay Pipes, Fittings and Ducts, Also Flexible Mechanical Joints for Use Solely with Surface Water Pipes and Fittings
BSI BS 65	1991 Amd 1 Vitrified Clay Pipes, Fittings and Ducts, Also Flexible Mechanical Joints for Use Solely with Surface Water Pipes and Fittings (AMD 8622) May 15, 1995 (R)
BSI BS 78: PART 2	(OBSOLESCENT) 1965 Amd 1 Cast Iron Spigot and Socket Pipes (Vertically Cast) and Spigot and Socket Fittings Part 2: Fittings (Partially Superseded by BS 4772)
BSI BS 416: PART 1	1990 Discharge and Ventilating Pipes and Fittings, Sand-Cast or Spun in Cast Iron Part 1: Specification for Spigot and Socket Systems
BSI BS 416: PART 2	1990 Discharge and Ventilating Pipes and Fittings, Sand-Cast or Spun in Cast Iron Part 2: Specification for Socketless Systems
BSI BS 437	1978 Amd 1 Cast Iron Spigot and Socket Drain Pipes and Fittings (Replaces BS 1130: 1943)
BSI BS 567	1973 Amd 1 Asbestos-Cement Flue Pipes and Fittings, Light Quality (AMD 5963) April 28, 1989
BSI BS 835	1973 Amd 1 Asbestos-Cement Flue Pipes and Fittings, Heavy Quality
BSI BS 2598: PART 3	1980 Glass Plant, Pipeline and Fittings Part 3: Pipeline and Fittings of Nominal Bore 15 to 150 mm: Compatibility and Interchangeability
BSI BS 2598: PART 4	1980 Glass Plant, Pipeline and Fittings Part 4: Glass Plant Components

TABLE E10.B1 British Standards and Specifications for Pipe, Tube, and Fittings *(Continued)*

Numbers	Title
BSI BS 2760	1973 Amd 1 Pitch-Impregnated Fibre Pipes and Fittings for Below and Above Ground Drainage (AMD 2675) June 30, 1978 (R)
BSI BS 2782: PT 11: METH 1103D	1997 Plastics Piping and Ducting Systems—Polyolefin Pipes and Fittings—Determination of Oxidation Induction Time Also Numbered as BS EN 728: 1997; (V)
BSI BS 2782: PT 11: METH 1104A	1994 Plastics Piping Systems—Plastic Pipes and Fittings—Determination of Opacity (V)
BSI BS 2782: PT 11: METH 1107A	1996 Plastics Piping and Ducting Systems—Plastic Pipes and Fittings—Method of Exposure to Direct (Natural) Weathering (V)
BSI BS 2782: PT 11: METH 1121A	1996 Thermoplastics Materials for Pipes and Fittings for Pressure Applications—Classification and Designation—Overall Service (Design) Coefficient (See BS EN ISO 12162) (V)
BSI BS 2782: PT 11: METH 1123H	1995 Thermoplastics Piping Systems—End-Load Bearing Mechanical Joints Between Pressure Pipes and Fittings—Test Method for Resistance to Pull Out Under Constant Longitudinal Force (See BS EN 712) (V)
BSI BS 2782: PT 11: METH 1140A	1995 Plastics Piping and Ducting Systems—Pipes and Fittings of Unplasticized Poly(Vinyl Chloride) (PVC_U)—Specimen Preparation for Determination of the Viscosity Number and Calculation of the K-Value (See BS EN 922) (V)
BSI BS 2782: PT 12: METH 1209A&B	1996 Plastics Piping Systems—Glass-Reinforced Thermosetting Plastics (GRP) Pipes and Fittings—Determination of the Resistance to Chemical Attack from the Inside of a Section in a Deflated Condition (V)
BSI BS 2782: PT 12: METH 1220A to C	1995 Plastics Piping Systems—Glass-Reinforced Thermosetting Plastics (GRP) Pipes and Fittings—Methods of Regression Analyses and Their Use (E) Supplement 1: Guide to Functional Performance Values; IEC 977: 1989
BSI BS 4514	1983 Amd 1 Unplasticized PVC Soil and Ventilating Pipes, Fittings and Accessories
BSI BS 4622	(OBSOLESCENT) 1970 Amd 3 Grey Iron Pipes and Fittings (Replaces BS 78: Part 1 1961)
BSI BS 4625	1970 Amd 2 Prestressed Concrete Pressure Pipes (Including Fittings)
BSI BS 4660	1989 Unplasticized Polyvinyl Chloride (PVC-V) Pipes and Plastics Fittings of Nominal Sizes 110 to 160 for Below Ground Gravity Drainage and Sewerage

TABLE E10.B1 British Standards and Specifications for Pipe, Tube, and Fittings *(Continued)*

Numbers	Title
BSI BS 4660	1989 Amd 1 Unplasticized Polyvinyl Chloride (PVC-V) Pipes and Plastic Fittings of Nominal Sizes 110 to 160 for Below Ground Gravity Drainage and Sewerage AMD 9132 July 15, 1996 (R)
BSI BS 4825: PART 1	1991 Stainless Steel Tubes and Fittings for the Food Industry and Other Hygienic Application Part 1: Specification for Tubes (Q)
BSI BS 4825: PART 1	1972 Amd 1 Stainless Steel Pipes and Fittings for the Food Industry Part 1: Pipes
BSI BS 4825: PART 2	1991 Stainless Steel Tubes and Fittings for the Food Industry and Other Hygienic Application Part 2: Specification for Bends and Tees (Q)
BSI BS 4825: PART 2	1973 Stainless Steel Pipes and Fittings for the Food Industry Part 2: Bends and Tees
BSI BS 4825: PART 3	1991 Stainless Steel Tubes and Fittings for the Food Industry and Other Hygienic Application Part 3: Specification for Clamp Type Couplings (Q)
BSI BS 4825: PART 3	1976 Stainless Steel Pipes and Fittings for the Food Industry Part 3: Clamp Type Couplings
BSI BS 4825: PART 4	1991 Stainless Steel Tubes and Fittings for the Food Industry and Other Hygienic Application Part 4: Specification for Threaded (IDF Type) Couplings (Q)
BSI BS 4825: PART 4	1977 Stainless Steel Pipes and Fittings for Food Industry Part 4: Screwed Type Couplings
BSI BS 4825: PART 5	1991 Stainless Steel Tubes and Fittings for the Food Industry and Other Hygienic Application Part 5: Specification for Recessed Ring Joint Type Couplings (Replaces BS 1864: 1966)
BSI BS 4962	1989 Plastic Pipe and Fittings for Use as Subsoil Field Drains
BSI BS 4962	1989 Amd 1 Plastic Pipes and Fittings for Use as Subsoil Field Drains (AMD 9131) July 15, 1996 (R)
BSI BS 5114	1975 Amd 2 Performance Requirements for Joints and Fittings for Use With Polyethylene Pipes (AMD 5336) July 31, 1987
BSI BS 5911: PART 2	1982 Amd 1 Precast Concrete Pipes and Fittings for Drainage and Sewerage Part 2: Inspection Chambers and Street Gullies
BSI BS 5911: PART 100	1988 Amd 1 Precast Concrete Pipes and Fittings for Drainage and Sewerage Part 100: Unreinforced and Reinforced Pipes and Fittings with Flexible Joints (AMD 6269) Dec. 22, 1989 (Supersedes BS 5911: Part 1 1981)

TABLE E10.B1 British Standards and Specifications for Pipe, Tube, and Fittings *(Continued)*

Numbers	Title
BSI BS 5911: PART 100	1988 Amd 2 Precast Concrete Pipes, Fittings and Ancillary Products Part 100: Specification for Unreinforced and Reinforced Pipes and Fittings with Flexible Joints (AMD 7588) April 15, 1993 (R)
BSI BS 5911: PART 101	1988 Precast Concrete Pipes and Fittings for Drainage and Sewerage Part 101: Glass Composite Concrete (GCC) Pipes and Fittings with Flexible Joints (Replaces DD 76: Part 1: 1981)
BSI BS 5911: PART 103	1994 Precast Concrete Pipes and Ancillary Concrete Products Part 103: Specification for Prestressed Non-Pressure Pipes and Fittings with Flexible Joints (Replaces BS 5178: 1975) (R)
BSI BS 5911: PART 110	1992 Precast Concrete Pipes, Fittings and Ancillary Products Part 110: Specification for Ogee Pipes and Fittings (Including Perforated)
BSI BS 5911: PART 110	1992 Amd 1 Precast Concrete Pipes, and Ancillary Concrete Products Part 110: Specification for Ogee Pipes and Fittings (Including Perforated) (AMD 8155) March 15, 1994 (R)
BSI BS 5911: PART 114	1992 Precast Concrete Pipes, Fittings and Ancillary Products Part 114: Specification for Porous Pipes (Supersedes BS 1194: 1969)
BSI BS 5911: PART 120	1989 Precast Concrete Pipes and Fittings for Drainage and Sewerage Part 120: Reinforced Jacking Pipes with Flexible Joints
BSI BS 5911: PART 120	1989 Amd 1 Precast Concrete Pipes, Fittings and Ancillary Products Part 120: Specification for Reinforced Jacking Pipes with Flexible Joints (AMD 9020) March 15, 1996 (R)
BSI BS 5911: PART 200	1989 Precast Concrete Pipes and Fittings for Drainage and Sewerage Part 200: Unreinforced and Reinforced Manholes and Soakaways of Circular Cross Section
BSI BS 5955: Part 8	1990 Code of Practice for Plastics Pipework (Thermoplastics Materials) Part 8: Installation of Thermoplastics Pipes and Associated Fittings for Use in Domestic Hot and Cold Water Services and Heating Systems
BSI BS 6076	1996 Polymeric Film for Use as a Protective Sleeving for Buried Iron Pipes and Fittings (For Site and Factory Application) (E)
BSI BS 6076	1981 Tubular Polyethylene Film for use as Protective Sleeving for Buried Iron Pipes and Fittings
BSI BS 6087	1990 Amd 1 Flexible Joints for Grey or Ductile Cast Iron Drain Pipes and Fittings (BS 437) and for Discharge and Ventilating Pipes and Fittings (BS 416) (AMD 6357) June 28, 1991 (R)

TABLE E10.B1 British Standards and Specifications for Pipe, Tube, and Fittings *(Continued)*

Numbers	Title
BSI BS 6464	1984 Amd 1 Reinforced Plastics Pipes, Fittings and Joints for Process Plants
BSI BS 7291: PART 1	1990 Thermoplastics Pipes and Associated Fittings for Hot and Cold Water for Domestic Purposes and Heating Installations in Buildings Part 1: General Requirements
BSI BS 7291: PART 2	1990 Thermoplastics Pipes and Associated Fittings for Hot and Cold Water for Domestic Purposes and Heating Installations in Buildings Part 2: Polybutylene (PB) Pipes and Associated Fittings
BSI BS 7291: PART 2	1990 Amd 1 Thermoplastics Pipes and Associated Fittings for Hot and Cold Water for Domestic Purposes and Heating Installations in Buildings Part 2: Specification for Polybutylene (PB) Pipes and Associated Fittings AMD 9443; April 15, 1997; (R)
BSI BS 7291: PART 3	1990 Thermoplastics Pipes and Associated Fittings for Hot and Cold Water for Domestic Purposes and Heating Installations in Buildings Part 3: Crosslinked Polyethylene (PE-X) Pipes and Associated Fittings (Read in Conjunction with BS 7291: Part 1)
BSI BS 7291: PART 4	1990 Amd 1 Thermoplastics Pipes and Associated Fittings for Hot and Cold Water for Domestic Purposes and Heating Installations in Buildings Part 4: Specification for Chlorinated Polyvinyl Chloride (PVC-C) Pipes and Associated Fittings and Solvent Cement (AMD 6399) July 31, 1991
BSI BS 7336	1990 Polyethylene Fusion Fittings with Integral Heating Elements for Use With Polyethylene Pipes for the Conveyance of Gaseous Fuels
BSI BS 7431	1991 Assessing Solar Water Heaters-Elastomeric Materials for Absorbers, Connecting Pipes and Fittings (ISO 9808: 1990)
BSI BS 7435 PART 1	1991 Fibre Cement Flue Pipes, Fittings and Terminals Part 1: Specification for Light Quality Fibre Cement Flue Pipes, Fittings and Terminals
BSI BS 7435 PART 2	1991 Fibre Cement Flue Pipes, Fittings and Terminals Part 2: Specification for Heavy Quality Fibre Cement Flue Pipes, Fittings and Terminals
BSI BS EN 295: PART 1	1991 Vitrified Clay Pipes and Fittings and Pipe Joints for Drains and Sewers Part 1: Requirements (Replaces BS 65: 1988)
BSI BS EN 295: PART 1	1991 Amd 1 Vitrified Clay Pipes and Fittings and Pipe Joints for Drains and Sewers Part 1: Requirements AMD 9290; Dec. 15, 1996 (R)
BSI BS EN 295-1	1991 Amd 2 Vitrified Clay Pipes and Fittings and Pipe Joints for Drains and Sewers Part 1: Requirements AMD 9429; May 1997; (R)

TABLE E10.B1 British Standards and Specifications for Pipe, Tube, and Fittings *(Continued)*

Numbers	Title
BSI BS EN 295: PART 2	1991 Vitrified Clay Pipes and Fittings and Pipe Joints for Drains and Sewers: Part 2: Quality Control and Sampling (Replaces BS 65: 1988)
BSI BS EN 295: PART 3	1991 Vitrified Clay Pipes and Fittings and Pipe Joints for Drains and Sewers: Part 3: Test Methods (Replaces BS 65: 1988)
BSI BS EN 295-4	1995 Vitrified Clay Pipes and Fittings and Pipe Joints for Drains and Sewers: Part 4: Requirements for Special Fittings, Adaptors and Compatible Accessories (R)
BSI BS EN 295: PART 5	1994 Vitrified Clay Pipes and Fittings and Pipe Joints for Drains and Sewers: Part 5: Requirements for Perforated Vitrified Clay Pipes and Fittings (R)
BSI BS EN 295-6	1996 Vitrified Clay Pipes and Fittings and Pipe Joints for Drains and Sewers: Part 6: Requirements for Vitrified Clay Manholes (R)
BSI BS EN 295-7	1996 Vitrified Clay Pipes and Fittings and Pipe Joints for Drains and Sewers: Part 7: Requirements for Vitrified Clay Pipes and Joints for Pipe Jacking (R)
BSI BS EN 476	1998 General Requirements for Components Used in Discharge Pipes, Drains and Sewers for Gravity Systems (R)
BSI BS EN 545	1995 Ductile Iron Pipes, Fittings, Accessories and Their Joints for Water Pipelines—Requirements and Test Methods (Partially Replaces BS 4772: 1988) (E)
BSI BS EN 588-1	1997 Fibre-Cement Pipes for Sewer and Drains Part 1: Pipes, Joints and Fittings for Gravity Systems Supersedes BS 3656: 1990; (P)
BSI BS EN 598	1995 Ductile Iron Pipes, Fittings, Accessories and Their Joints for Sewerage Applications—Requirements and Test Methods (Replaces BS 4772: 1988) (E)
BSI BS EN 639	1995 Common Requirements for Concrete Pressure Pipes Including Joints and Fittings (Read in Conjunction With BS 4625) (E)
BSI BS EN 640	1995 Reinforced Concrete Pressure Pipes and Distributed Reinforced Concrete Pressure Pipes (Non-Cylinder Type), Including Joints and Fittings (E)
BSI BS EN 641	1995 Reinforced Concrete Pressure Pipes, Cylinder Type, Including Joints and Fittings (Read in Conjunction with BS 639 (E)
BSI BS EN 642	1995 Prestressed Concrete Pressure Pipes, Cylinder and Non-Cylinder, Including Joints, Fittings and Specific Requirements for Prestressing Steel for Pipes (Read in Conjunction with BS 4625: 1970) (R)

TABLE E10.B1 British Standards and Specifications for Pipe, Tube, and Fittings *(Continued)*

Numbers	Title
BSI BS EN 723	1996 Copper and Copper Alloys—Combustion Method for Determination of Carbon on the Inner Surface of Copper Tubes or Fittings (V)
BSI BS EN 922	1995 Plastics Piping and Ducting Systems—Pipes and Fittings of Unplasticized Poly (Vinyl Chloride) (PVC-U)—Specimen Preparation for Determination of the Viscosity Number and Calculation of the K-Value (V)
BSI BS EN 969	1996 Ductile Iron Pipes, Fittings, Accessories and Their Joints for Gas Pipelines—Requirements and Test Methods (Replaces BS 4772: 1988) (E)
BSI BS EN 1056	1996 Plastic Piping and Ducting Systems—Plastic Pipes and Fittings—Method for Exposure to Direct (Natural) Weathering (V)
BSI BS EN 1119	1996 Plastics Piping Systems—Joints for Glass-Reinforced Thermosetting Plastics (GRP) Pipes and Fittings—Test Methods for Leaktightness and Resistance to Damage of Flexible and Reduced-Articulation Joints (V)
BSI BS EN 1120	1996 Plastics Piping Systems—Glass-Reinforced Thermosetting Plastics (GRP) Pipes and Fittings—Determination of the Resistance to Chemical Attack from the Inside of a Section in a Deflected Condition (V)
BSI BS EN 1229	1997 Plastics Piping Systems—Glass-Reinforced Thermosetting Plastics (GRP) Pipes and Fittings—Test Methods to Prove the Leaktightness of the Wall Under Short-Term Internal Pressure (V)
BSI BS EN 10242	1995 Threaded Pipe Fittings in Malleable Cast Iron (Partially Replaces BS 143 & 1256: 1986) (E)
BSI BS ISO 10931-3	1996 Plastic Piping Systems for Industrial Applications—Poly (Vinylidene Fluoride) Part 3: Fittings (V)

TABLE E10.B2 British Standards and Specifications for Flanges, Bolts, Nuts, and Gaskets

Numbers	Title
BSI BS 10	(OBSOLESCENT) 1962 Amd 4 Flanges and Bolting Pipes, Valves and Fittings
BSI BS 848 PART 4	1997 Fans for General Purposes Part 4: Dimensions ISO 13351: 1996 (Q)
BSI BS 1560 SEC 3.1	1989 Steel Pipe Flanges and Flanged Fittings (Nominal Sizes Half an Inch to 24 Inch) for The Petroleum Industry Part 3: Steel, Cast Iron and Copper Alloy Flanges Section 3.1: Steel Flanges
BSI BS 1560 SEC 3.1	1989 Amd 1 Circular Flanges for Pipes, Valves and Fittings (Class Designated) Part 3: Steel, Cast Iron and Copper Alloy Flanges Section 3.1: Specification for Steel Flanges (AMD 7557) June 15, 1993 (Q)
BSI BS 1560 SEC 3.1	1989 Amd 2 Circular Flanges for Pipes, Valves and Fittings (Class Designated) Part 3: Steel, Cast Iron and Copper Alloy Flanges Section 3.1: Specification for Steel Flanges (AMD 8593) July 15, 1995 (Q)
BSI BS 1560 SEC 3.2	1989 Steel Pipe Flanges and Flanged Fittings (Nominal Sizes Half an Inch to 24 Inch) for the Petroleum Industry Part 3: Steel, Cast Iron and Copper Alloy Flanges Section 3.2: Cast Iron Flanges
BSI BS 1560 SEC 3.3	1989 Steel Pipe Flanges and Flanged Fittings (Nominal Sizes Half an Inch to 24 Inch) for the Petroleum Industry Part 3: Steel Cast Iron and Copper Alloy Flanges Section 3.3: Copper Alloy and Composite Flanges
BSI BS 2782 PT 12: METH1224F	1997 Plastics Piping System—Glass—Reinforced Thermosetting Plastics (GRP) Components—Test Methods to Prove the Design of the Bolted Flange Joints Also Known as BS EN 1450: 1997: (V)
BSI BS 3293	1960 Amd 1 Carbon Steel Pipe Flanges (OVER 24 in Nominal Size) for the Petroleum Industry
BSI BS 4504 SEC 3.1	1989 Amd 2 Circular Flanges for Pipes, Valves and Fittings (PN Designated) Part 3: Steel Cast Iron and Copper Alloy Flanges Section 3.1 Steel Flanges (AMD 6334) Jan. 31, 1991
BSI BS 4504 SEC 3.1	1989 Amd 3 Circular Flanges for Pipes, Valves and Fittings (PN Designated) Part 3: Steel, Cast Iron and Copper Alloy Flanges Section 3.1 Steel Flanges (AMD 7555) June 15, 1993 (Supersedes BS 4504 Part 1 1969)
BSI BS 4504 SEC 3.3	1989 Amd 1 Circular Flanges for Pipes, Valves and Fittings, (PN Designated Part 3: Steel, Cast Iron and Copper Alloy Flanges) Section 3.3 Specification for Copper Alloy and Composite Flanges (AMD 6274) Nov. 30, 1989
BSI BS 4581	1970 Amd 4 Dimensions for Flanges for the Mounting of Plain Grinding Wheels Renumbered as BS 4581: Part 1: 1970 Per AMD 4393; March 30, 1984

TABLE E10.B2 British Standards and Specifications for Flanges, Bolts, Nuts, and Gaskets *(Continued)*

Numbers	Title
BSI BS 4581 PART 2	1984 Flanges for Mounting Grinding Wheels on Grinding Machine Tools Part 2: Specification for Dimensions and Materials of Flanges for Grinding Wheels of Less Than 76.2 mm Bore
BSI BS 4882	1990 Bolting for Flanges and Pressure Containing Purposes (Q)
BSI BS 5500 ENQ CASE 17	1979 Enquiry Cases Case 17: Split Ring Flanges
BSI BS 5500 ENQ CASE 36	1995 Enquiry Cases Case 36: Loose Flanges Split Across a Diameter and Keyed into the Back of a Component (Q)
BSI BS 5500 ENQ CASE 36	1993 Enquiry Case Case 36: Loose Flanges Split Across a Diameter and Keyed into the Back of a Component (Q)
BSI BS 5500 ENQ CASE 36	1981 Enquiry Case Case 36: Loose Flanges Split Across a Diameter and Keyed into the Back of a Component
BSI BS 5500 ENQ CASE 58	1995 Enquiry Case Case 58: Bolted Flanges Complying with ANSI B 16.5 Issue 2: (Q)
BSI BS 5500 ENQ CASE 58	1984 Enquiry Case Case 58: Bolted Flanges Complying with ANSI B 16.5
BSI BS 5500 ENQ CASE 100	1993 Enquiry Case Case 100: Domed and Bolted Ends with Full Face Flange
BSI BS 5500 ENQ CASE 117	1996 Enquiry Case Case 117: Flanges Fitted with Swing Bolts and Clamps (Q)
BSI BS 5587	1978 Amd 1 Coated Abrasives Flap Wheels with Incorporated Flanges or Separate Flanges. Designation and Dimensions
BSI BS 5840 PART 1	1980 Valve Mating Details for Actuator Operation Part 1: Flange Dimensions and Characteristics
BSI BS 6276	1987 Dimensions and Identification Code for Mounting Flanges and Shaft Ends for Hydraulic Fluid Power Pumps and Motors
BSI BS 6339	1983 Dimensions for Circular Flanges for General Purpose Industrial Fans
BSI BS AU 211	1987 Dimensions of Four-Hole Flanges for Gear-Driven Air Compressors for Commercial Vehicles and Buses
BSI BS AU 214A PART 1	1987 Amd 1 Gearbox Flanges Part 1: Dimensions of Cross-Tooth Gearbox Flanges, Type T, for Commercial Vehicles and Buses (Formerly BS AU 214: 1987)
BSI BS AU 214 PART 2	1988 Gearbox Flanges Part 2: Dimensions for Type A Gearbox Flanges for Commercial Vehicles and Buses
BSI BS AU 214 PART 3	1988 Gearbox Flanges Part 3: Dimensions for Type S Gearbox Flanges for Commercial Vehicles and Buses

TABLE E10.B2 British Standards and Specifications for Flanges, Bolts, Nuts, and Gaskets *(Continued)*

Numbers	Title
BSI BS AU 259	1995 Components for Commercial Vehicles and Buses—Cross-Tooth Propeller Shaft Flanges, Type T (ISO 12667: 1993) (E)
BSI BS MA 9	(OBSOLESCENT) 1970 Amd 3 Flanges, Bolting and Gaskets for Exhaust Gas Piping for Diesel Engines and Boiler Uptakes
BSI BS EN 1092-2	1997 Flanges and Their Joints—Circular Flanges for Pipes, Valves, Fittings and Accessories, PN Designated Part 2: Cast Iron Flanges Supersedes BS 4504: Section 3.2: 1989; (Q)
BSI BS EN 1450	1997 Plastics Piping Systems—Glass-Reinforced Thermosetting Plastics (GRP) Components—Test Methods to Prove the Design of Bolted Flanged Joints Also Known as BS 2782: Part 12: Method 1224 F: 1997; (V)
BSI BS EN 3149	1997 Shank Nuts-Installation Holes, 60 Degree Swage, Flanges-Design Standard (S)
BSI BS EN 60154-1	1996 Flanges for Waveguides Part 1: General Requirements (IEC 154-1: 1982) (S)
BSI BS EN 60154-2	1997 Flanges for Waveguides Part 2: Relevant Specifications for Flanges for Ordinary Rectangular Waveguides Renumbers BS 6569: Part 2: 1985; (S)
BSI BS EN 60264-5-1	1997 Packaging of Winding Wirest 5.1: Cylindrical Barrelled Delivery Spools with Conical Flanges—Basic Dimensions IEC 60264-5-1: 1997; (E)
BSI BS EN ISO 5210	1996 Industrial Valves—Multi-Turn Valve Actuator Attachments Supersedes Section 3 of BS 5840: Part 1: 1980 and Section 3 of BS 5840: Part 2: 1982 (E)
BSI BS ISO 666	1996 Machine Tools—Mounting of Plain Grinding Wheels by Means of Hub Flanges Supersedes BS 4581: Part 1: 1970; (F)
BSI BS ISO 7299	1996 Diesel Engines—End-Mounting Flanges for Fuel Injection Pumps (E)
BSI BS ISO 12129-2	1995 Plain Bearings–Part 2: Tolerances on Form and Position and Surface Roughness for Shafts, Flanges and Thrust Collars (E)
BSI PD 6438	1969 Review of Present Methods for Design of Bolted Flanges for Pressure Vessels
BSI BS 57	(OBSOLESCENT) 1951 Amd 3 B.A. Screws, Bolts and Nuts
BSI BS 64	1992 Normal and High Strength Steel Bolts and Nuts for Railway Rail Fishplates (Q)
BSI BS 64	1992 Amd 1 Normal and High Strength Steel Bolts and Nuts for Railway Rail Fish Plates (AMD 8210) July 15, 1994 (Q)

TABLE E10.B2 British Standards and Specifications for Flanges, Bolts, Nuts, and Gaskets *(Continued)*

Numbers	Title
BSI BS 325	(OBSOLESCENT) 1947 Amd 3 Black Cup and Countersunk Bolts and Nuts
BSI BS 916	(OBSOLESCENT) 1953 AMD 4 Black Bolts, Screws and Nuts
BSI BS 1083	(OBSOLESCENT) 1965 Amd 2 Precision Hexagon Bolts, Screws and Nuts (B.S.W. and B.S.F. Threads)
BSI BS 1768	(OBSOLESCENT) 1963 Amd 3 Unified Precision Hexagon Bolts, Screws and Nuts (UNC and UNF Threads) Normal Series
BSI BS 1769	(OBSOLESCENT) 1951 Amd 7 Unified Precision Hexagon Bolts, Screws and Nuts (UNC and UNF Threads) Heavy Series
BSI BS 2485	1987 Tee Slots, Tee Bolts, Tee Nuts and Tenons
BSI BS 3692	(OBSOLESCENT) 1967 Amd 1 ISO Metric Precision Hexagon Bolts, Screws and Nuts
BSI BS 3692	(OBSOLESCENT) 1967 Amd 2 ISO Metric Precision Hexagon Bolts, Screws and Nuts Metric Units (AMD 8227) November 15, 1994 (E)
BSI BS 4190	(OBSOLESCENT) 1967 AMD 2 ISO Metric Black Hexagon Bolts, Screws and Nuts
BSI BS 4190	(OBSOLESCENT) 1967 AMD 3 ISO Metric Black Hexagon Bolts, Screws and Nuts (AMD 8226) Nov. 15, 1994 (E)
BSI BS 4395 PART 1	1969 Amd 2 High Strength Friction Grip Bolts and Associated Nuts and Washers for Structural Engineering Part 1: General Grade (E)
BSI BS 4395 PART 2	1969 Amd 2 High Strength Friction Grip Bolts and Associated Nuts and Washers for Structural Engineering Part 2: Higher Grade Bolts and Nuts and General Grade Washers (E)
BSI BS 4933	(OBSOLESCENT) 1973 ISO Metric Black Cup and Countersunk Head Bolts and Screws with Hexagon Nuts (E)
BSI BS 6040	1981 Nomenclature for Bolts, Screws, Nuts and Accessories
BSI BS 6293 PART 2	1994 Aerospace-MJ Threads Part 2: Limit Dimensions for Bolts and Nuts (ISO 5855-2: 1988) (S)
BSI BS 6293 PART 2	1982 MJ Threads for Aerospace Construction Part 2: Dimensions for Bolts and Nuts
BSI BS 6322 PART 1	1982 Tolerances for Fasteners Part 1: Tolerances of Bolts, Screws and Nuts with Thread Diameter MW 1.6 mm and MV 150 mm and Product Grades A, B and C

TABLE E10.B2 British Standards and Specifications for Flanges, Bolts, Nuts, and Gaskets *(Continued)*

Numbers	Title
BSI BS 6322 PART 2	1982 Tolerances for Fasteners Part 2: Tolerances of Bolts, Screws and Nuts with Thread Diameters from 1 mm up to 3 mm and Product Grade F, for Fine Mechanics
BSI BS 6322 PART 3	1992 Tolerances for Fasteners Part 3: Specification for Tolerances of Plain Washers for Bolts, Screws and Nuts with Nominal Thread Diameters from 1 mm up to and Including 150 mm. Product Grades A and C (ISO 4759-3: 1991)
BSI BS 6322 PART 3	1982 Tolerances for Fasteners Part 3: Tolerances of Washers for Metric Bolts, Screws and Nuts with Thread Diameters from 1 mm up to and including 150 mm. Product Grades A and C.
BSI BS 7670 PART 1	1993 Steel Nuts and Bolts for Resistance Projection Welding Part 1: Specification for Dimensions and Properties (E)
BSI BS 7670 PART 1	1993 Amd 1 Steel Nuts and Bolts for Resistance Projection Welding Part 1: Specification for Dimensions and Properties (AMD 8215) July 15, 1994 (E)
BSI BS 7670 PART 2	1997 Steel Nuts and Bolts for Resistance Projection Welding Part 2: Specification for Welding of Weld Nuts and Weld Bolts Supersedes BS 2996: 1958; (E)
BSI BS EN 20225	1992 Fasteners—Bolts, Screws, Studs and Nuts—Symbols and Designations of Dimensions (ISO 225: 1983) (Replaces BS 6565: 1985)
BSI BS EN 28839	1992 Mechanical Properties of Fasteners—Bolts, Screws, Studs and Nuts Made of Non-Ferrous Metals (ISO 8839: 1986) (E)
BSI 2A 58	(OBSOLESCENT) 1962 Amd 4 Steel Hexagonal Nuts (B.S.F. Threads) for Shear Bolts for Aircraft (Replaces BS A57 and A58: 1952)
BSI 3A 100	1991 General Requirements for Bolts and Free Running Nuts of Tensile Strength not Exceeding 1249 MPa (Supersedes 2A 100: 1968) (S)
BSI 3A 100	1991 Amd 1 General Requirements for Bolts and Free Running Nuts of Tensile Strength not Exceeding 1249 MPa (AMD 7661) April 15, 1993 (S)
BSI 2A 110	1962 Amd 4 Steel Nuts (Unified Hexagons and Unified Threads) for Shear Bolts for Aircraft (Replaces BS A 109 and A 110: 1954)
BSI HR 650	1972 Amd 2 High Expansion Heat-Resisting Steel Bar and Wire for the Manufacture of Bolts, Studs, Set Screws and Nuts (Ni 25.5, Cr 15, Ti 2, Mn 1.5, Mo 1.25, Si 0.7, V 0.3) (Limiting Ruling Section 20 mm)

TABLE E10.B2 British Standards and Specifications for Flanges, Bolts, Nuts, and Gaskets *(Continued)*

Numbers	Title
BSI 2S 147	1976 0.5 Per Cent Nickel-Chromium-Molybdenum Steel Bars for the Manufacture of Forged Bolts and Forged Nuts (Replaces BS S 147: 1969)
BSI 2S 147	1976 Amd 1 0.5 Per Cent Nickel-Chromium-Molybdenum Steel Bars for the Manufacture of Forged Bolts and Forged Nuts (AMD 6836) Nov. 29, 1991 (Replaces BS S 147: 1969)
BSI 2S 149	1976 1.75 Per Cent Nickel-Chromium-Molybdenum Steel Bars for the Manufacture of Forged Bolts and Forged Nuts (Replaces BS S 149: 1972)
BSI 2S 149	1976 Amd 1 1.75 Per Cent Nickel-Chromium-Molybdenum Steel Bars for the Manufacture of Forged Bolts and Forged Nuts (AMD 6837) Nov. 29, 1991 (Replaces BS S 149: 1972)
BSI S 158	1977 1 Per Cent Chromium-Molybdenum Steel Bars for the Manufacture of Forged Bolts and Forged Nuts
BSI PD 7300	1979 Nuts and Bolts: Recommended Drawing Ratios for School and Colleges. Teacher's Notes
BSI BSD 3063	(OBSOLESCENT) 1965 Amd 1 Dimensions of Gaskets for Pipe Flanges
BSI BS 3381	1989 Spiral Wound Gaskets for Steel Flanges to BS 1560 (Q)
BSI BS 4255 PART 1	1986 Rubber Used in Performed Gaskets for Weather Exclusion from Buildings Part 1: Non-Cellular Gaskets
BSI BS 4332	1989 Phenol-Formaldehyde Resin-Bonded Cork Jointing
BSI BS 7076 PART 1	1989 Dimensions of Gaskets for Flanges to BS 1560 Part 1: Non-Metallic Flat Gaskets (Replaces BS 1560: Part 2: 1970)
BSI BS 7076 PART 2	1989 Dimensions of Gaskets for Flanges to BS 1560 Part 2: Metallic Ring-Joint Gaskets for Use with Steel Flanges (Replaces BS 1560: Part 2 and BS 1970)
BSI BS 7076 PART 2	1989 Amd 1 Dimensions of Gaskets for Flanges to BS 1560 Part 2: Specification for Metallic Ring-Joint Gaskets for Use with Steel Flanges (AMD 8592) June 15, 1995 (Replaces BS 1560: Part 2 and BS 1970) (Q)
BSI BS 7076 PART 3	1989 Dimensions of Gaskets for Flanges to BS 1560 Part 3: Specification for Non-Metallic Envelope Gaskets (Replaces BS 1560: Part 2: 1970)
BSI BS 7076 PART 4	1989 Dimensions of Gaskets for Flanges to BS 1560 Part 4: Corrugated, Flat or Grooved Metallic and Filled Metallic Gaskets (Replaces BS 1560: Part 2: 1970)

TABLE E10.B2 British Standards and Specifications for Flanges, Bolts, Nuts, and Gaskets *(Continued)*

Numbers	Title
BSI BS MA 9	(OBSOLESCENT) 1970 Amd 3 Flanges, Bolting and Gaskets for Exhaust Gas Piping for Diesel Engines and Boiler Uptakes
BSI BS EN 1514-1	1997 Flanges and Their Joints—Dimensions of Gaskets for PN-Designated Flanges Part 1: Non-Metallic Flat Gaskets with or without Inserts Supersedes BS 4865: Part 1: 1989; (E)
BSI BS EN 1514-2	1997 Flanges and Their Joints—Dimensions of Gaskets for PN-Designated Flanges Part 2: Spiral Wound Gaskets for Use with Steel Flanges Supersedes BS 4865: Part 2: 1989; (E)
BSI BS EN 1514-3	1997 Flanges and Their Joints—Dimensions of Gaskets for PN-Designated Flanges Part 3: Non-Metallic PTFE Envelope Gaskets Supersede BS 4865: 1989: (E)
BSI BS EN 1514-4	1997 Flanges and Their Joints—Dimensions of Gaskets for PN-Designated Flanges Part 4: Corrugated, Flat or Grooved Metallic and Filled Metallic Gaskets for use with Steel Flanges Supersedes BS 4865: Part 4: 1989; (E)

TABLE E10.B3 British Standards and Specifications for Valves

Numbers	Title
BSI BS 341: PART 1	1991 Transportable Gas Container Valves Part 1: Specification for Industrial Valves for Working Pressures up to and Including 300 Bar (Supersedes BS 341: Part 2-1963) (E)
BSI BS 341: PART 1	1991 Amd 1 Transportable Gas Container Valves Part 1: Specification for Industrial Valves for Working Pressures up to and Including 300 Bar (AMD 7641) May 15, 1993
BSI BS 759: PART 1	1984 Amd 1 Valves, Gauges and Other Safety Fittings for Application to Boilers and to Piping Installation for and in Connection with Boilers Part 1: Specification for Valves, Mounting and Fittings
BSI BS 1123: PART 1	1987 Safety Valves, Gauges and Fusible Plugs for Compressed Air or Inert Gas Installations Part 1: Code of Practice for Installation
BSI BS 1212 PART 1	1990 Float Operated Valves (Excluding Floats) Part 1: Piston Type Float Operated Valves (Copper Alloy Body) (Excluding Floats)
BSI SI 1212 PART 2	1990 Float Operated Valves (Excluding Floats) Part 2: Diaphragm Type Float Operated Valves (Copper Alloy Body) (Excluding Floats)
BSI BS 1212 PART 3	1990 Float Operated Valves Part 3: Specification for Diaphragm Type Float Operated Valves (Plastic Bodied) for Cold Water Services Only (Excluding Floats)
BSI BS 1212 PART 4	1991 Float Operated Valves Part 4: Specification for Compact Type Float Operated Valves for WC Flushing Cisterns (Including Floats)
BSI BS 1319	1976 Amd 2 Medical Gas Cylinders, Valves and Yoke Connections (AMD 4603) June 29, 1984
BSI BS 1414	1975 Amd 2 Steel Wedge Gate Valves (Flanged and Butt-Welding Ends) for the Petroleum, Petrochemical and Allied Industries (AMD 6562) Aug. 31, 1990
BSI BS 1415: PART 1	1976 Amd 2 Mixing Valves Part 1: Non-Thermostatic, Non-Compensating Mixing Valves
BSI BS 1415: PART 2	1986 Mixing Valves Part 2: Thermostatic Mixing Valves
BSI BS 1552	1995 Open Bottomed Taper Plug Valves for 1st, 2nd and 3rd Family Gases up to 200 mbar (E)
BSI BS 1552	1995 Amd 1 Open Bottomed Taper Plug Valves for 1st, 2nd and 3rd Family Gases up to 200 mbar AMD 9622; Sept. 1997; (E)
BSI BS 1552	1989 Manual Shut-off Valves for Use with 1st, 2nd and 3rd Family Gases
BSI BS 1655	1950 Amd 2 Flanged Automatic Control Valves for the Process Control Industry (Face to Face Dimensions)

TABLE E10.B3 British Standards and Specifications for Valves *(Continued)*

Numbers	Title
BSI BS 1868	1975 Amd 1 Steel Check Valves (Flanged and Butt-Welding Ends) for the Petroleum, Petrochemical and Allied Industries (AMD 6563) July 31, 1990
BSI BS 1873	1975 Amd 1 Steel Globe and Globe Stop and Check Valves (Flanged and Butt-Welding Ends) for the Petroleum, Petrochemical and Allied Industries (AMD 6564) July 31, 1990
BSI BS 1963	1990 Pressure Operated Relay Valves for Domestic, Commercial and Catering Gas Appliances
BSI BS 2080	(OBSOLESCENT) 1989 Face-To-Face, Centre-To-Face, End-To-End and Centre-To-End Dimensions of Valves (Partially Superseded by BS EN 558: Part 1: 1994 and BS EN 558: Part 2: 1994)
BSI BS 2080	(OBSOLESCENT) 1989 Face-To-Face, Centre-To-Face, End-To-End and Centre-To-End Dimensions of Valves (AMD 8434) May 15, 1995 (Partially Superseded by BS EN 558: Part 1: 1994 and BS EN 558: Part 2: 1994)
BSI BS 2456	1990 Floats (Plastics) for Float Operated Valves for Cold Water Services
BSI BS 2782: PT 11: METH 1101A	1981 Methods of Testing Plastics Part 11: Thermoplastic Pipes, Fittings and Valves Method 1101A: Measurement of Dimensions of Pipes
BSI BS 2782: PT 11: METH 1106A	1983 Methods of Testing Plastics Part 11: Thermoplastic Pipes, Fittings and Valves Method 1106 A: Assessment of Pigment Dispersion in Polyolefin Pipes and Fittings: Microtome Method
BSI BS 2782: PT 11: METH 1108A	1989 Methods of Testing Plastics Part 11: Thermoplastic Pipes, Fittings and Valves Method 1108 A: True Impact Rate (TIR) Boundaries of Pipes (Read in Conjunction with BS 2782: Part 0)
BSI BS 2782: PT 11: METH 1109A	1989 Methods of Testing Plastics Part 11: Thermoplastic Pipes, Fittings and Valves Method 1109 A: Resistance to Environmental Stress Cracking of Polyethylene Pipes and Fitting for Non-Pressure Applications
BSI BS 2782: PT 11: METH 1110	1989 Methods of Testing Plastics Part 11: Thermoplastic Pipes, Fittings and Valves Method 1110: Tensile Properties of Dumb-Bell Specimens from PVC Gutter Profiles or Pipes for Non-Pressure Applications Read in Conjunction with BS 2782: Part 0
BSI BS 2782: PT 11: METH 1112 A	(OBSOLESCENT) 1989 Methods of Testing Plastics Part 11: Thermoplastic Pipes, Fittings and Valves Method 1112 A: Leaktightness of Thermoplastic Pipes and Fittings for Non-Pressure Applications Superseded by BS EN 1053: 1996; Read in Conjunction with BS 2782: Part 0

TABLE E10.B3 British Standards and Specifications for Valves *(Continued)*

Numbers	Title
BSI BS 2782: PT 11: METH 1121B	1997 Methods of Testing Plastics Part 11: Pipes, Fittings and Valves Method 1121 B: Thermoplastic Pipes for the Conveyance of Fluids—Nominal Outside Diameters and Nominal Pressures—Metric Series ISO 161-1: 1996; (V)
BSI BS 2782; PT 11: METH 1121C	1997 Methods of Testing Plastics Part 11: Pipes, Fittings and Valves Method 1121 C: Thermoplastic Pipes for the Conveyance of Fluids—Nominal Outside Diameters and Nominal Pressures—Inch-Based Series ISO 161-2: 1996; Together with BS ISO 4065 and BS ISO 11922-2
BSI BS 2782: PT 11: METH 1121H	1996 Methods of Testing Plastics Part 11: Thermoplastic Pipes, Fittings and Valves Method 1121 H: Thermoplastic Pipes for Transport of Liquids under Pressure—Calculation of Head Losses (ISO/TR 10501: 1993) (V)
BSI BS 2782: PT 11: METH 1127P	1997 Methods of Testing Plastics Part 11: Thermoplastic Pipes, Fittings and Valves Method 1127P: Thermoplastic Pipes for the Conveyance of Fluids—Resistance to Internal Pressure—Test Method ISO 1167: 1996; (V)
BSI BS 2782: PT 11: METH 1131	1992 Thermoplastic Valves-Torque-Test Method (ISO 8233: 1988)
BSI BS 2782: PT 11: METH 1132	1992 Thermoplastic Valves–Fatigue Strength-Test Method (ISO 8659: 1989)
BSI BS 2782: PT 11: METH 1133A	1997 Plastic Piping Systems—Valves for Polyethylene (PE)-Piping Systems—Test Methods fo Leaktightness Under and after Bending applied to the Operating Mechanism. Also Known as BS EN 1680: 1997; (V)
BSI BS 2782: PT 11: METH 1133B	1997 Plastic Piping Systems—Thermoplastics Valves–Test Methods for the Integrity of a Valve After Temperature Cycling under Bending Also Numbered as BS EN 1704: 1997; (V)
BSI BS 2782: PT 11: METH 1133C	1997 Plastic Piping Systems—Thermoplastics Valves–Test Method for Integrity of a Valve After an External Blow Also Known as BS EN 1705: 1997; (V)
BSI BS 2782: PT 11: METH 1133E	1997 Plastic Piping Systems—Polyethylene (PE) Valves–Test Method for Resistance to Thermal Cycling Also Numbered as BS EN 12119: 1997; (V)
BSI BS 2782: PT 11: METH 1134A	1997 Plastic Piping Systems—Thermoplastics Valves–Test Methods for Resistance to Internal Pressure and Leaktightness Also Numbered as BS EN 917: 1997; (V)
BSI BS 2782: PT 11: METH 1150E	Methods of Testing Plastics Part 11: Thermoplastic Pipes, Fittings and Valves Method 1150E: Plastic Pipe and Fittings—Preparation of Test Piece Assemblies between a Polyethylene (PE) Pipe and Electrofusion Fitting ISO 11413: 1996 (V)

TABLE E10.B3 British Standards and Specifications for Valves *(Continued)*

Numbers	Title
BSI BS 2782: PT12: METH 1211A–F	1997 Plastic Piping Systems—Glass-Reinforced Thermosetting Plastics (GRP) Pipes—Determination of Apparent Initial Circumferential Tensile Strength Also Numbered as BS EN 1394: 1997; (V)
BSI BS 2879	1980 Amd 3 Draining Taps (Screw-Down Pattern)
BSI BS 3457	1973 Material for Water Tap and Stopvalve Seat Washers
BSI BS 4062: PART 1	1982 Valves for Hydraulic Fluid Power Systems Part 1: Methods for Determining Pressure Differential Pressure/Flow Characteristics
BSI BS 4062: PART 2	1990 Valves for Hydraulic Fluid Power Systems Part 2: Methods for Determining Performance
BSI BS 5041: PART 1	1987 Amd 1 Fire Hydrant System Equipment Part 1: Landing Valves for Wet Risers (AMD 5912) Sept. 30, 1988
BSI BS 5041: PART 1	1975 Fire Hydrant System Equipment Part 1: Landing Valves for Wet Risers
BSI BS 5041: PART 2	1987 Amd 1 Fire Hydrant System Equipment Part 2: Landing Valves for Dry Risers (AMD 5776) July 29, 1988
BSI BS 5041: PART 2	1976 Fire Hydrant System Equipment Part 2: Landing Valves for Dry Risers
BSI BS 5041: PART 4	1975 Amd 1 Fire Hydrant Systems Equipment Part 4: Boxes for Landing Valves for Dry Risers
BSI BS 5150	1990 Cast Iron Gate Valves
BSI BS 5151	1974 Amd 2 Cast Iron Gate (Parallel Slide) Valves for General Purposes (Replaces BS 3948: 1965)
BSI BS 5152	1974 Amd 4 Cast Iron Globe and Globe Stop and Check Valve for General Purposes AMD 6042; July 31, 1989; Replaces BS 3961: 1965; (Q)
BSI BS 5153	1974 Amd 3 Cast Iron Check Valves for General Purposes (AMD 6067) July 31, 1989 (Replaces BS 4090: 1966)
BSI BS 5154	1991 Copper Alloy Globe, Globe Stop and Check, Check and Gate Valves
BSI BS 5155	1984 Amd 1 Butterfly Valves
BSI BS 5155	1984 Amd 2 Butterfly Valves (AMD 6990) May 1, 1992
BSI BS 5156	1985 Amd 1 Diaphragm Valves for General Purposes (AMD 6513) June 29, 1990
BSI BS 5157	1989 Steel Gate (Parallel Slide) Valves
BSI BS 5158	1989 Cast Iron Plug Valves
BSI BS 5159	1974 Amd 2 Cast Iron and Carbon Steel Ball Valves for General Purposes
BSI BS 5160	1989 Steel Globe Valves, Globe Stop and Check Valves and Lift Type Check Valves

TABLE E10.B3 British Standards and Specifications for Valves *(Continued)*

Numbers	Title
BSI BS 5163	1986 Amd 2 Predominantly Key-Operated Cast Iron Gate Valves for Waterworks Purposes (AMD 6057) July 31, 1989
BSI BS 5351	1986 Amd 3 Steel Ball Valves for the Petroleum, Petrochemical and Allied Industries (AMD 6271) Sept. 28, 1990 (E)
BSI BS 5352	1981 Amd 2 Steel Wedge Gate, Globe and Check Valves 50 mm and Smaller for the Petroleum, Petrochemical and Allied Industries (AMD 6560) Aug. 31, 1990 (Supersedes BS 2995: 1996)
BSI BS 5353	1989 Steel Plug Valves
BSI BS 5672	1991 Designation of the Direction of Rotation of Cylinders and Valves in Cylinder Heads, and Definition of Right-Hand and Left-Hand in-Line Engines and Locations on an Engine for Reciprocating Internal Combustion Engines (ISO 1204: 1990) (Replaces BS 5673: 1979, BS 5674: 1979)
BSI BS 5793: PART 1	1989 Industrial-Process Control Valves Part 1: Specification and Terminology for Control Valves (IEC 534-1: 1987) (Q)
BSI BS 5793: SEC 3.2	1985 Industrial Process Control Valves Part 3: Dimensions Section 3.2: Face-to-Face Dimensions for Flangeless Control Valves Except Wafer Butterfly Valves
BSI BS 5793: PART 4	1987 Industrial Process Control Valves Part 4: Inspection and Routine Testing
BSI BS 5793: PART 5	1984 Industrial Process Control Valves Part 5: Specification for Marking
BSI BS 5793: PART 6	1986 Industrial Process Control Valves Part 6: Mounting Details for Attachment of Positioners to Control Valve Actuators
BSI BS 5793: SEC 8.1	1986 Industrial Process Control Valves Part 8: Noise Considerations Section 8.1: Method for Laboratory Measurement of Noise Generated by Aerodynamic Flow Through Control Valves
BSI BS 5834 PART 2	1983 Surface Boxes, and Guards for Underground Stopvalves for Gas and Waterworks Purposes Part 2: Small Surface Boxes (Replaces BS 1426 and 3461: 1969)
BSI BS 5834 PART 3	1985 Surface Boxes, and Guards for Underground Stopvalves for Gas and Waterworks Purposes Part 3: Large Surface Boxes
BSI BS 5944: PART 4	1984 Measurement of Airborne Noise From Hydraulic Fluid Power Systems and Components Part 4: Method of Determining Sound Power Levels from Valves Controlling Flow and Pressure
BSI BS 5995	1980 Methods of Test for Electrohydraulic Servovalves

TABLE E10.B3 British Standards and Specifications for Valves *(Continued)*

Numbers	Title
BSI BS 6282: PART 1	1982 Devices with Moving Parts for the Prevention of Contamination of Water by Backflow Part 1: Check Valves of Nominal Size up to and Including DN 54
BSI BS 6282: PART 2	1982 Devices with Moving Parts for the Prevention of Contamination of Water by Backflow Part 2: Terminal Anti-Vacuum Valves of Nominal Size up to and Including DN 54
BSI BS 6282: PART 3	1982 Devices with Moving Parts for the Prevention of Contamination of Water by Backflow Part 3: In-Line Anti-Vacuum of Nominal Size up to and Including DN 42
BSI BS 6282: PART 4	1982 Devices with Moving Parts for the Prevention of Contamination of Water by Backflow Part 4: Combined Check and Anti-Vacuum Valves of Nominal Size up to and Including DN 42
BSI BS 6283: PART 1	1991 Safety and Control Devices for Use in Hot Water Systems Part 1: Specification for Expansion Valves for Pressure up to and Including 10 Bar
BSI BS 6283: PART 1	1982 Safety Devices for Use in Hot Water Systems Part 1: Specification for Expansion Valves for Pressures up to and Including 10 Bar (R)
BSI BS 6283: PART 2	1991 Safety and Control Devices for Use in Hot Water Systems Part 2: Specification for Temperature Relief Valves for Pressures from 1 Bar to 10 Bar
BSI BS 6283: PART 2	1982 Safety Devices for Use in Hot Water Systems Part 2: Specification for Temperature Relief Valves for Pressure up to and Including 10 Bar
BSI BS 6283: PART 3	1991 Safety and Control Devices for Use in Hot Water Systems Part 3: Specification for Combined Temperature and Pressure Relief Valves for Pressures from 1 Bar to 10 Bar
BSI BS 6283: PART 3	1982 Safety Devices for Use in Hot Water Systems Part 3: Specification for Combined Temperature and Pressure Relief Valves for Pressures up to and Including 10 Bar
BSI BS 6283: PART 4	1991 Safety and Control Devices for Use in Hot Water Systems Part 4: Specification for Drop-Tight Pressure Reducing Valves of Nominal Size up to and Including DN 50 for Supply Pressures up to and Including 12 Bar
BSI BS 6494: PART 2	1986 Hydraulic Fluid Power Valve Mounting Devices Part 2: Four-Port and Five-Port Servo Valves
BSI BS 6494: PART 3	1989 Hydraulic Fluid Power Valve Mounting Surfaces Part 3: Pressure-Relief Valves
BSI BS 6494: PART 4	1989 Hydraulic Fluid Power Valve Mounting Surfaces Part 4: Clamping Dimensions of Four-Port Sizes 03 and 05, Modular Stack Valves and Directional Control Valves

TABLE E10.B3 British Standards and Specifications for Valves *(Continued)*

Numbers	Title
BSI BS 6494: PART 6	1989 Hydraulic Fluid Power Valve Mounting Surfaces Part 6: Pressure-Control Valves (Excluding Pressure-Relief Valves), Sequence Valves, Unloading Valves, Throttle Valves and Check Valves
BSI BS 6675	1986 Servicing Valves (Copper Alloy) for Water Services
BSI BS 6683	1985 Amd 1 Installation and Use of Valves (AMD 6604) April 30, 1991 (E)
BSI 6697	1986 Electrohydraulic Proportional Control Valves
BSI 6755: PART 1	1986 Testing of Valves Part 1: Production Pressure Testing Requirements (Replaces the Requirements for Production Pressure Testing in BS 5146: Part 1: 1974 and BS 5146: Part 2: 1984)
BSI 6755: PART 2	1987 Amd 2 Testing of Valves Part 2: Specification for Fire Type-Testing Requirements (AMD 6712) June 28, 1991 (Replaces BS 5146: Part 1: 1974 and BS 5146: Part 2: 1984)
BSI BS 6759: PART 1	1984 Amd 1 Safety Valves Part 1: Specification for Safety Valves for Steam and Hot Water (AMD 5493) March 31, 1987 (Replaces BS 759; Part 2: 1975)
BSI BS 6759: PART 1	1984 Amd 2 Safety Valves Part 1: Specification for Safety Valves for Steam and Hot Water (AMD 8272) Feb. 15, 1995 (Q)
BSI BS 6759: PART 2	1984 Amd 1 Safety Valves Part 2: Specification for Safety Valves for Compressed Air or Inert Gases (AMD 5494) March 31, 1987 (Replaces BS 1123: Part 2: 1975)
BSI BS 6759: PART 2	1984 Amd 2 Safety Valves Part 2: Specification for Safety Valves for Compressed Air or Inert Gases AMD 9276; Jan. 15, 1997; (Q)
BSI BS 6759: PART 3	1984 Amd 1 Safety Valves Part 3: Specification for Safety Valves for Process Fluids
BSI BS 6759: PART 3	1984 Amd 2 Safety Valves Part 3: Specification for Safety Valves for Process Fluids (AMD 8273) Feb. 15, 1995 (Q)
BSI BS 6821	1988 Methods for Aerodynamic Testing of Dampers and Valves
BSI BS 7296: PART 1	1990 Cavities for Hydraulic Fluid Power Cartridge Valves Part 1: Two-Port Slip-in Valves
BSI BS 7350	1990 Double Regulating Globe Valves and Flow Measurement Devices for Heating and Chilled Water Systems
BSI BS 7350	1990 Amd 1 Double Regulating Globe Valves and Flow Measurement Devices for Heating and Chilled Water Systems (AMD 6865) Dec. 24, 1991

TABLE E10.B3 British Standards and Specifications for Valves *(Continued)*

Numbers	Title
BSI BS 7389: PART 1	1990 Pneumatic Fluid Power Valve Mounting Surfaces Part 1: Five Port Directional Control Valves (Without Electrical Connector)
BSI BS 7403: PART 9	1995 Full-Flow Lubricating Oil Filters for Internal Combustion Engines Part 9: Method for Test for Inlet and Outlet Anti-Drain Valves (ISO 4548-9: 1995) (E)
BSI BS 7438	1991 Steel and Copper Alloy Wafer Check Valves, Single Disc, Spring-Loaded Type
BSI BS EN 488	1995 Preinsulated Bonded Pipe Systems for Underground Hot Water Networks—Steel Valve Assembly for Steel Service Pipes, Polyurethane Thermal Insulation and Outer Casing of Polyethylene (E)
BSI BS EN 558-1	1996 Industrial Valves—Face-to-Face and Centre-to-Face Dimensions of Metal Valves for Use in Flanged Pipe Systems Part 1: PN-Designated Valves (F)
BSI BS EN 558-2	1996 Industrial Valves—Face-to-Face and Centre-to-Face Dimensions of Metal Valves for Uses in Flanged Piping Systems Part 2: Class-Designated Valves (F)
BSI BS EN 561	1995 Gas Welding Equipment—Quick-Action Couplings with Shut-off Valves for Welding, Cutting and Allied Processes (F)
BSI BS EN 736-1	1995 Valves—Terminology Part 1: Definition of Type of Valves (V)
BSI BS EN 736-2	1997 Valves—Terminology Part 2: Definition of Components of Valves (E)
BSI BS EN 816	1997 Sanitary Tapware—Automatic Shut-off Valves PN 10 (R)
BSI BS EN 917	1997 Plastic Piping Systems—Thermoplastic Valves–Test Methods for Resistance to Internal Pressure and Leaktightness Also Numbered as BS 2782: Part 11: Methods 1134A and B: 1997; (V)
BSI BS EN 1092-2	1997 Flanges and Their Joints—Circular Flanges for Pipes, Valves, Fittings and Accessories, PN Designated Part 2: Cast Iron Flanges Supersedes BS 4504: Section 3.2: 1989; (Q)
BSI BS EN 1112	1997 Shower Outlets for (PN 10) Sanitary Tapware (L)
BSI BS EN 1680	1997 Plastic Piping Systems—Valves for Polyethylene (PE) Piping Systems–Test Method for Leaktightness Under and After Bending Applied to the Operating Mechanism. Also Known as BS 2782: Part 11: Method 1133 A: 1997; (V)
BSI BS EN 1704	1997 Plastics Piping Systems—Thermoplastics Valves–Test Method for the Integrity of a Valve After Temperature Cycling under Bending Also Numbered as BS 2782: Part 11: Method 1133B: 1997; (V)

TABLE E10.B3 British Standards and Specifications for Valves *(Continued)*

Numbers	Title
BSI BS EN 1705	1997 Plastics Piping Systems—Thermoplastics Valves–Test Method for the Integrity of a Valve After an External Blow Also Known as BS 2782: Part 11: Method 1133C: 1997; (V)
BSI BS EN 12119	1997 Plastics Piping Systems—Polyethylene (PE) Valves–Test Method for Resistance to Thermal Cycling. Also Numbered as BS 2782: Part 11: Method 1133E: 1997; (V)
BSI BS EN 28233	1992 Thermoplastics Valves–Torque-Test Method (ISO 8233: 1988) (Also numbered BS 2782: Part 11: Method 1131: 1992)
BSI BS EN 28659	1992 Thermoplastics Valves–Fatigue Strength-Test Method (ISO 8659: 1989) (Also Numbered BS 2782: Part 11: Method 1132: 1992)
BSI B EN 60534-1	1993 Amd 1 Industrial-Process Control Valves Part 1: Control Valve Terminology and General Considerations (IEC 534-1: 1987) (AMD 7815) July 15, 1993 (Formerly BS 5793: Part 1: 1989) (Q)
BSI BS EN 60534-2-1	1993 Amd 1 Industrial-Process Control Valves Part 2: Flow Capacity Section 1: Sizing Equations for Incompressible Fluid Flow Under Installed Conditions (AMD 7816) July 15, 1993 (Formerly BS 5793: Part 2: Section 2.1: 1979. Replaces BS 4740: Part 1: 1971) (Q)
BSI BS EN 60534-2-2	1993 Amd 1 Industrial-Process Control Valves Part 2: Flow Capacity Section 2: Sizing Equations for Incompressible Fluid Flow Under Installed Conditions (AMD 7817) July 15, 1993 (Formerly BS 5793: Section 2.2: 1981. Replaces BS 4740: Part 2: 1971) (Q)
BSI BS EN 60534-2-3	1993 Amd 1 Industrial-Process Control Valves Part 2: Flow Capacity Section 3: Test Procedures (IEC 534-2-3: 1983) (AMD 7818) July 15, 1993 (Formerly BS 5793: Section 2.3: 1993) (Q)
BSI BS EN 60534-8-2	1993 Amd 1 Industrial-Process Control Valves Part 8: Noise Considerations Section 2: Laboratory Measurement of Noise Generated by Hydrodynamic Flow Through Control Valves (IEC 534-8-2: 1991) (AMD 7819) July 15, 1993 (Formerly BS 5793: Section 8.2: 1991) (Q)
BSI BS EN 60534-8-3	1996 Industrial-Process Control Valves Part 8: Noise Considerations Section 3: Control Valve Aerodynamic Noise Prediction Method (IEC 534-8-3: 1995) (Q)
BSI BS EN 60534-8-4	1994 Industrial-Process Control Valves Part 8: Noise Considerations Section 8.4: Prediction of Noise Generated by Hydrodynamic Flow (IEC 534-8-4: 1994) (Q)

TABLE E10.B3 British Standards and Specifications for Valves *(Continued)*

Numbers	Title
BSI BS EN 60730-2-8	1995 Automatic Electrical Controls for Household and Similar Use Part 2: Particular Requirements Section 2.8: Electrically Operated Water Valves, Including Mechanical Requirements (Partially Replaces BS 3955: 1986) (L)
BSI BS EN 60730-2-8	1995 Amd 1 Automatic Electrical Controls for Household and Similar Use Part 2: Particular Requirements Section 2.8: Electrically Operated Water Valves, Including Mechanical Requirements AMD 9680; Nov. 15, 1997; Read in Conjunction with BS EN 60730-1: 1995; (L)
BSI BS EN ISO 5210	1996 Industrial Valves—Multi-Turn Valve Actuator Attachments Supersedes Section 3 of BS 5840: Part 1: 1980 and Section 3 of BS 5840: Part 2: 1982 (E)
BSI BS ISO 4401	1994 Hydraulic Fluid Power—Four-Port Directional Control Valves—Mounting Surfaces (E)
BSI BS ISO 6263	1997 Hydraulic Fluid Power—Compensated Flow-Control Valves Mounting Surfaces Supersedes BS 6494: Part 5: 1989; (E)

TABLE E10.D1 DIN Standards and Specifications for Pipe, Tube, and Fittings

Numbers	Title
DIN 76 PT 2	Thread Run-Outs and Thread Undercuts for Pipe Threads Conforming to ISO 228 Part 1—1984
DIN 259 PT 1	Whitworth Pipe Threads: Parallel Internal and Parallel External Screw Threads; Nominal Dimensions (Not to Be Used for New Design Projects)
DIN 259 PT 2	Whitworth Pipe Threads; Parallel Internal and Parallel External Screw Threads; Tolerances (Not to Be Used for New Design Projects)
DIN 259 PT 3	Whitworth Pipe Threads; Parallel Internal and Parallel External Screw Threads; Limiting Dimensions (Not to Be Used for New Design Projects)
DIN 431	Pipe Nuts with Thread in Accordance with DIN ISO 228 Part 1—1982
DIN 906	Hexagon Socket Pipe Plugs—1992
DIN 909	Hexagon Head Pipe Plugs—1992
DIN 1389 PT 1	Connectors for Water Closets; Dimensions
DIN 1389 PT 2	Connectors for Water Closets; Principles of Construction and Testing
DIN 1986-4	Site Drainage Systems; Use of Sewer Pipes and Fittings Made of Different Materials
DIN 1988 PT 3	Drinking Water Supply Systems; Pipe Sizing (DVGW Code of Practice)—1988
DIN 2406	Pipelines; Symbols; Pipe Classes—1968
DIN 2559 PT 1	Edge Preparation for Welding; Directions Regarding Edge Forms; Fusion Welding of Butt Joints in Steel Tubes
DIN 2559 PT 2	Edge Preparation for Welding; Matching of Inside Diameter for Circumferential Welds on Seamless Pipes
DIN 2559 PT 3	Weld Preparation; Inside Diameters of Steel Pipes Required for Circumferential; Butt Welding
DIN 3567	Pipe Brackets for NW 20 to 500—1963
DIN 3568	Clamping Plates for the Suspension of Pipes on I and IP Steel Beams
DIN 3570	Steel Strap for Tubes of NW 20 to 500
DIN 3575	Hanger Straps with Welding End for Pipe Hanging—1962
DIN 3853	Solderless and Soldered Pipe Unions; Threaded Ends for Union Nuts; Design Sheets—1982
DIN 3858	Whitworth Pipe Threads for Pipe Couplings; Parallel Internal Threads and Taper External Threads; Thread Dimensions—1988
DIN 3861	Solderless Pipe Unions; Cutting Rings; Design and Type W Bore Shape—1982

TABLE E10.D1 DIN Standards and Specifications for Pipe, Tube, and Fittings *(Continued)*

Numbers	Title
DIN 3867	Solderless Pipe Unions with Cutting Ring; Thrust Collars for Butt Joints—1982
DIN 3870	Soldered and Solderless Pipe Couplings; Coupling Nuts—1985
DIN 3872	Solderless Pipe Couplings with Cutting Ring; Coupling Nuts for Butt Joints—1985
DIN 3904	Olive Type Compression Couplings; Male Stud Elbows
DIN 3907	Olive Type Compression Couplings; Male Stud Tees (Stud Branch)
DIN 3908	Solderless Compression Couplings with Olive; Equal Tees
DIN 3911	Solderless Compression Couplings with Olive; Elbow Bulkhead Compression Couplings
DIN 3914	Olive Type Compression Couplings; Male Stud Tees (Stud Run)
DIN 3952	Solderless Compression Couplings with Olive; Male Stud Elbow Assemblies
DIN 3953	Solderless Compression Couplings with Olive; Male Stud Tee (Stud Branch) Assemblies
DIN 3954	Solderless Compression Couplings with Olive; Male Stud Tee (Stud Run) Assemblies
DIN 4060	Elastomer Seals for Pipe Joints in Drain and Sewers; Requirements and Testing—1988
DIN 4922 PT 1	Steel Filter Pipes for Drilled Wells with Slot Perforation and Fishing; (Butt Strap Joint)
DIN 4941	Screw Threads for Drill Pipes for Seamless Drill Pipes for Water and Rock Drillings According to the Percussion Drilling and Core Drilling Method
DIN 7632	Compression Couplings with Spherical Liner; Reducers
DIN 7639	Compression Couplings with Spherical Liner; Equal Tees
DIN 8975 PT 9	Refrigeration Plants; Safety Principles for Design, Equipment and Installation; Flexible Pipe Elements in the Refrigerant Circuit
DIN 16928	Pipes of Thermoplastic Materials; Pipe Joints, Elements for Pipes, Laying; General Directions—1979
DIN 16962 PT 1	Pipe Joints and Elements for Polypropylene (PP) Pressure Pipelines Types 1 and 2; Bends of Segmental Construction for Butt-Welding; Dimensions—1980

TABLE E10.D1 DIN Standards and Specifications for Pipe, Tube, and Fittings *(Continued)*

Numbers	Title
DIN 16962 PT 2	Pipe Joint Assemblies and Fittings for Types 1 and 2 Polypropylene (PP) Pressure Pipes; Tees and Branches Produced by Segment Inserts and Necking for Butt Welding; Dimensions—1983
DIN 16962 PT 3	Pipe Joints and Elements for Polypropylene (PP) Pressure Pipelines; Types 1 and 2; Bends Formed from Pipe for Butt-Welding; Dimensions—1980
DIN 16962 PT 5	Pipe Joint Assemblies and Fittings for Types 1 and 2 Polypropylene (PP) Pressure Pipes; General Quality Requirements and Testing—1989
DIN 16962 PT 6	Pipe Joints and Elements for Polypropylene (PP) Pressure Pipelines; Types 1 and 2; Injection Moulded Elbows for Socket-Welding; Dimensions—1980
DIN 16962 PT 7	Pipe Joints and Elements for Polypropylene (PP) Pressure Pipelines; Types 1 and 2; Injection Moulded Tee Pieces for Socket-Welding; Dimensions—1980
DIN 16962 PT 8	Pipe Joints and Elements for Polypropylene (PP) Pressure Pipelines; Types 1 and 2; Injection Moulded Sockets and Caps for Socket-Welding; Dimensions—1980
DIN 16962 PT 9	Pipe Joint Assemblies and Fittings for Types 1 and 2 Polypropylene (PP) Pressure Pipes; Injection Moulded Reducers and Nipples for Socket Welding; Dimensions—1983
DIN 16962 PT 10	Pipe Joint Assemblies and Fittings for Types 1 to 3 Polypropylene (PP) Pressure Pipes; Injection-Moulded Fittings for Butt Welding; Dimensions—1989
DIN 16962 PT 11	Pipe Joints and Elements for Polypropylene (PP) Pressure Pipelines; Types 1 and 2; Turned and Pressed Reducing Sockets for Butt-Welding; Dimensions—1980
DIN 16962 PT 13	Pipe Joint Assemblies and Fittings for Type 1 and Type 2 Polypropylene (PP) Pressure Pipes; Pipe Couplings; Dimensions—1987
DIN 16963 PT 1	Pipe Joints and Elements for High Density Polyethylene (HDPE) Pressure Pipelines; Types 1 and 2; Pipe Bends of Segmental Construction for Butt-Welding; Dimensions—1980
DIN 16963 PT 2	Pipe Joint Assemblies and Fittings for Types 1 and 2 High Density Polyethylene (HDPE) Pressure Pipes; Tees and Branches Produced by Segment Inserts and Necking for Butt Welding; Dimensions—1983
DIN 16963 PT 3	Pipe Joints and Elements for High Density Polyethylene (HDPE) Pressure Pipelines; Types 1 and 2; Pipe Bends for Butt-Welding; Dimensions—1980

TABLE E10.D1 DIN Standards and Specifications for Pipe, Tube, and Fittings *(Continued)*

Numbers	Title
DIN 16963 PT 5	Pipe Joint Assemblies and Fittings for High Density Polyethylene (PE-HD) Pressure Pipes; General Quality Requirements and Testing—1989
DIN 16963 PT 6	Pipe Joint Assemblies and Fittings for High Density Polyethylene (PE-HD) Pressure Pipes; Injection-Moulded Fittings for Butt Welding; Dimensions—1989
DIN 16963 PT 7	Pipe Joints Assemblies and Fittings for High Density Polyethylene (PE-HD) Pressure Pipes; Fittings for Resistance Welding; Dimensions—1989
DIN 16963 PT 8	Pipe Joints and Elements for High Density Polyethylene (HDPE) Pressure Pipelines; Types 1 and 2; Injection-Moulded Elbows for Socket-Welding; Dimensions—1980
DIN 16963 PT 9	Pipe Joints and Elements for High Density Polyethylene (HDPE) Pressure Pipelines; Types 1 and 2; Injection-Moulded Tee Pieces for Socket-Welding, Dimensions—1980
DIN 16963 PT 10	Pipe Joints and Elements for High Density Polyethylene (HDPE) Pressure Pipelines; Types 1 and 2; Injection-Moulded Sockets and Caps for Socket-Welding; Dimensions—1980
DIN 16963 PT 13	Pipe Joints and Elements for High Pressure Polyethylene (HDPE) Pressure Pipelines; Types 1 and 2; Turned and Pressed Reducing Sockets for Butt-Welding; Dimensions—1980
DIN 16963 PT 14	Pipe Joint Assemblies and Fittings for Types 1 and 2 High-Density Polyethylene (HDPE) Pressure Pipes; Injection Moulded Reducers and Nipples for Socket Welding; Dimensions—1983
DIN 16963 PT 15	Pipe Joint Assemblies and Fittings for High-Density Polyethylene (PE-HD) Pressure Pipes; Pipe Couplings; Dimensions—1987
DIN 16966 PT 1	Glass Fibre Reinforced Polyester Resin (UP-GF) Pipe Fittings and Joint Assemblies; Fittings: General Quality Requirements and Testing—1988
DIN 16966 PT 2	Glass Fibre Reinforced Polyester Resin (UP-GF) Pipe Fittings and Joints; Elbows; Dimensions—1982
DIN 16966 PT 4	Glass Fibre Reinforced Polyester Resin (UP-GF) Pipe Fittings and Joints; Tees; Nozzles; Dimensions—1982
DIN 16966 PT 5	Glass Fibre Reinforced Polyester Resin (UP-GF) Pipe Fittings and Joints; Reducers; Dimensions—1982
DIN 16966 PT 8	Glass Fibre Reinforced Polyester Resin (UP-GF) Pipe Fittings and Joints; Laminated Joints; Dimensions—1982

TABLE E10.D1 DIN Standards and Specifications for Pipe, Tube, and Fittings *(Continued)*

Numbers	Title
DIN 16970	Adhesives for Bonding Pipes and Pipe System Elements of Rigid PVC; General Quality Requirements and Testings—1970
DIN 19532	Pipelines of Unplasticized Polyvinyl Chloride (Rigid PVC, PVC-U) for Drinking Water Supply; Pipes; Pipe Joints; Pipeline Parts; DVGW Technical Rule—1979
DIN 19559 PT1	Measurement of Flow of Waste Water in Open Channels and Gravity Conduits; General Information
DIN 28065	Thermal Shock Resistance of Enamelled Steel Appliances and Pipe Fittings for Process Engineering Applications—1993
DIN 86041 PT 1	Welding Flanges for Tanks and Sea Boxes; Nominal Pressure 10 and 16
DIN EN 253	Preinsulated Bonded Pipe Systems for Underground Hot Water Networks; Pipe Assemblies of Steel Service Pipes, Polyurethane Thermal Insulation and Polyethylene Outer Casing—1994
DIN EN 448	Preinsulated Bonded Pipe Systems for Underground Hot Water Networks; Fitting Assemblies of Steel Service Pipes, Polyurethane Thermal Insulation and Polyethylene Outer Casing—1994
DIN EN 476	General Requirements for Components Used in Discharge Pipes, Drains and Sewers for Gravity Systems; Supersedes DIN 19543: 1982-08, DIN 19549: 1989-02, DIN 19550: 1987-10 and DIN 19550-2: 1990-05
DIN EN 489	Preinsulated Bonded Pipe Systems for Underground Hot Water Networks; Joint Assemblies for Steel Service Pipes with Polyurethane Thermal Insulation and Polyethylene Outer Casing—1994
DIN EN 681-1	Materials Requirements for Elastomeric Pipe Joint Seals Used in Water and Drainage Applications; Vulcanized Rubber—1996; Supersedes Parts of DIN 4060, December 1988 Edition
DIN EN 911	Elastomeric Sealing Ring Type Joints and Mechanical Joints for Thermoplastics Pressure Piping; Test Method for Leaktightness under External Hydrostatic Pressure—1995
DIN EN 1277	Thermoplastics Piping Systems for Buried Non-Pressure Applications; Test Methods for Leaktightness of Elastomeric Sealing Ring Type Joints—1996
DIN EN 1716	Polyethylene (PE) Tapping Tees; Test Method for Impact Resistance of an Assembled Tapping Tee

TABLE E10.D1 DIN Standards and Specifications for Pipe, Tube, and Fittings *(Continued)*

Numbers	Title
DIN EN 10242	Threaded Pipe Fitting in Malleable Cast Iron English Version of DIN EN 10242 (Supersedes DIN 2950, April 1983 Edition)—1995
DIN 1478	Turnbuckles Made from Steel Tube or Round Steel Bar—1975
DIN 7340	Tubular Rivets; Made from Tube—1993
DIN 28187	Tube-To-Tube-Sheet Joints in Tubular Heat Exchangers—1991
DIN 52613	Thermal Insulation Testings; Determination of Thermal Conductivity by the Tube Method—1977
DIN EN 754-1	Aluminium and Aluminium Alloy Cold Drawn Rod/Bar and Tube Part 1: Technical Conditions for Inspection and Delivery—1997; Together with DIN 755-1 Supersedes DIN 1746-2 and DIN 1747-2
DIN EN 754-2	Aluminium and Aluminium Alloy Cold Drawn Rod/Bars and Tube Part 2: Mechanical Properties—1997; Together with DIN 755-2 Supersedes DIN 1746-1 and 1747-1
DIN EN 754-3	Aluminium and Aluminium Alloy Cold Drawn Rod/Bar and Tube; Round Bars: Tolerances on Dimensions and Form; (Supersedes DIN 1798, September 1986 Edition)—1996
DIN EN 754-4	Aluminium and Aluminium Alloy Cold Drawn Rod/Bar and Tube; Square Bars: Tolerances on Dimensions and Form; (Supersedes DIN 1796, September 1986 Edition)—1996
DIN EN 754-5	Aluminium and Aluminium Alloy Cold Drawn Rod/Bar and Tube; Rectangular Bars: Tolerances on Dimensions and Form; (Supersedes DIN 1769, September 1986 Edition)—1996
DIN EN 754-6	Aluminium and Aluminium Alloy Cold Drawn Rod/Bar and Tube; Hexagonal Bars: Tolerances on Dimensions and Form; (Supersedes DIN 1797, September 1986 Edition)—1996
DIN EN 755-1	Aluminium and Aluminium Alloy Extruded Rod/Bar, Tube and Profiles Part 1: Technical Conditions for Inspection and Delivery—1997; Replaces DIN 1748-2 February 1983; and Together with DIN EN 754-1 August 1997 Replaces DIN 1746-2 and 1747-2 February 1983
DIN EN 755-2	Aluminium and Aluminium Alloy Extruded Rod/Bar, Tube and Profiles Part 2: Mechanical Properties—1997; Supersedes DIN 1748-1 February 1983; Together with DIN EN 754-2 August 1997 Supersedes DIN 1746-1 January 1987 and DIN 1747-1 February 1983

TABLE E10.D1 DIN Standards and Specifications for Pipe, Tube, and Fittings *(Continued)*

Numbers	Title
DIN EN 755-3	Aluminium and Aluminium Alloy Extruded Rod/Bar, Tube and Profiles; Round Bars: Tolerances on Dimensions and Form—1995 (Supersedes DIN 1799, September 1986 Edition)
DIN EN 755-4	Aluminium and Aluminium Alloy Extruded Rod/Bar, Tube and Profiles; Square Bars: Tolerances on Dimensions and Form—1995 (Supersedes DIN 59700, August 1986 Edition)
DIN EN 755-5	Aluminium and Aluminium Alloy Extruded Rod/Bar, Tube and Profiles; Rectangular Bars: Tolerances on Dimensions and Form—1995 (Supersedes DIN 1770, September 1987 Edition)
DIN EN 755-6	Aluminium and Aluminium Alloy Extruded Rod/Bar, Tube and Profiles; Hexagonal Bars: Tolerances on Dimensions and Form—1995 (Supersedes DIN 59701, August 1986 Edition)
DIN EN 10232	Metallic Materials; Tube (In Full Section) Bend Test—1994
DIN EN 10233	Metallic Materials; Tube Flattening Test—1994 (Supersedes DIN 50136, June 1979 Edition)
DIN EN 10234	Metallic Materials; Tube Drift Expanding Test—1994 (Supersedes DIN 50135, August 1965 Edition)
DIN EN 10235	Metallic Materials; Tube Flanging Test—1994 (Supersedes DIN 50139, November 1965 Edition)
DIN EN 10236	Metallic Materials; Tube Ring Expanding Test—1994 (Supersedes DIN 50137, June 1979 Edition)
DIN EN 10237	Metallic Materials; Tube Ring Tensile Test—1994 (Supersedes DIN 50138, May 1979 Edition)
DIN 1230 PT 1 (W)	Vitrified Clayware for Sewers; Socket Pipes and Fittings; Dimensions (Intended to be Superseded by DIN EN 295-4, May 1995 Edition)
DIN 1230 PT 2 (W)	Vitrified Clayware for Sewers; Socket Pipes and Fittings; Technical Delivery Conditions
DIN 1230 PT 6 (W)	Clayware for Sewerage; Pipes and Fittings without Sockets; Dimensions (Intended to be Superseded by DIN EN 295-4, May 1995 Edition)
DIN 1230 PT 7 (W)	Clayware for Sewerage; Pipes and Fittings without Sockets; Technical Delivery Conditions
DIN 2353	Compression Fittings and Couplings—1991
DIN 2470 PT 1	Steel Gas Pipelines for Permissible Working Pressures up to 16 Bar; Pipes and Fittings—1987
DIN 2605-2	Steel Butt-Welding Pipe Fittings Part 2: Elbows and Bends for Use at Full Service Pressure—1995
DIN 2605 PT 1	Steel Butt-Welding Pipe Fittings; Elbows and Bends with Reduced Pressure Factor—1991

TABLE E10.D1 DIN Standards and Specifications for Pipe, Tube, and Fittings *(Continued)*

Numbers	Title
DIN 2609	Steel Butt-Welding Pipe Fittings; Technical Delivery Conditions—1991
DIN 2614	Cement Mortar Linings for Ductile Iron and Steel Pipes and Fittings; Application, Requirements and Testing—1990; Superseded in Part By DIN EN 545, January 1995 Edition
DIN 2615 PT 1	Steel Butt-Welding Pipe Fittings; Tees with Reduced Pressure Factor—1992; Together with DIN 2615 Part 2, May 1992 Edition, Supersedes DIN 2615, June 1964 Edition
DIN 2615 PT 2	Steel Butt-Welding Pipe Fittings; Tees for Use at Full Service Pressure—1992; Together with DIN 2615 Part 1, May 1992 Edition, Supersedes DIN 2615, June 1964 Edition
DIN 2616 PT 1	Steel Butt-Welding Pipe Fittings; Eccentric Reducers with Reduced Pressure Factor—1991
DIN 2616 PT 2	Steel Butt-Welding Pipe Fittings; Reducers for Use at Full Service Pressure—1991
DIN 2617	Steel Butt-Welding Pipe Fittings; Caps—1991
DIN 2618	Butt-Welding Steel Fittings; Welding Saddles; Nominal Pressure 16—1968
DIN 2619	Butt-Welding Steel Fittings; Bends for Welding; Nominal Pressure 16—1968
DIN 2826	Clamp Type Coupling Assemblies for Use with DN 15 to DN 50 Steam and Hot Water Hoses Rated For Pressures up to 18 Bar
DIN 2848	Lined Steel Flanged Pipes and Steel or Cast Iron Flanged Fittings Rated for a Pressure of 10 Bar (PN 10)—1993; Supersedes July Edition and DIN 2848 Parts 10 to 12, January 1982 Editions
DIN 2856	Capillary Solder Fittings; Assembly Dimensions and Testing
DIN 2873	Enamelled Steel Flanged Pipes and Fittings Rated for 10 Bar (PN 10)—1993
DIN 2874	Steel Flanged Pipes and Steel and Cast Iron Flanged Fittings Lined with PTFE or PFA; Technical Delivery Condition—1993
DIN 2875	Steel Flanged Pipes and Flanged Fittings Lined with Soft or Hard Rubber; Technical Delivery Conditions—1993
DIN 2876	Enamelled Steel Flanged Pipes and Fittings; Technical Delivery Conditions—1993
DIN 2950	Malleable Cast Iron Fittings
DIN 2980	Screwed Steel Pipe Fittings—1977

TABLE E10.D1 DIN Standards and Specifications for Pipe, Tube, and Fittings *(Continued)*

Numbers	Title
DIN 2981	Threaded Steel Pipe Fittings; Fittings with Long Screw Thread—1982
DIN 2982	Screwed Steel Pipe Fittings; Parallel Nipples; Taper Nipples—1977
DIN 2983	Screwed Steel Pipe Fittings; Bends—1977
DIN 2986	Threaded Steel Pipe Fittings; Sockets—1977
DIN 2987 PT 1	Threaded Steel Pipe Fittings; Crosses, Tees, Elbows—1977
DIN 2987 PT 2	Threaded Steel Pipe Fittings; Reducing Tees and Elbows—1977
DIN 2988	Reducing Sockets; Threaded Steel Pipe Fittings—1977
DIN 2990	Threaded Steel Pipe Fittings; Hexagon Nipples; Bushings—1977
DIN 2991	Threaded Steel Pipe Fittings; Plugs, Caps—1977
DIN 2993	Threaded Steel Pipe Fittings; Pipe Unions—1977
DIN 2999 PT 1	Pipe Threads for Tubes and Fittings; Parallel Internal Thread and Taper External Thread; Thread Dimensions—1983
DIN 2999 PT 2	Whitworth Pipe Threads for Tubes and Fittings; Cylindrical Internal Thread and Conical External Thread; Gauging System and Use of Gauges—1973
DIN 2999 PT 3	Whitworth Pipe Threads for Tubes and Fittings; Gauge Dimensions—1973
DIN 2999 PT 4	Pipe Threads for Tubes and Fittings; Sizes for Taper Screw Limit Plug Gauges for Parallel Internal Thread—1986
DIN 2999 PT 5	Whitworth Pipe Threads for Tubes and Fittings; Cylindrical Screw Limit Ring Gauges for Gauging Conical External Threads; Sizes—1973
DIN 2999 PT 6	Whitworth Pipe Threads for Tubes and Fittings; Conical Screw Check Plugs; Sizes—1975
DIN 3871	Male Fittings for Use with Compression Couplings—1995
DIN 3942	Compression Fittings and Couplings; Swivel Type Male Stud Elbows with 24 Degree Cone and O-Ring and with Type W Port as in DIN 3861—1994
DIN 3943	Compression Fittings and Couplings; Swivel Type Male Stud Tees (Stud Branch) with 24 Degree Cone and O-Ring and with Type W Port as in DIN 3861—1994
DIN 3944	Compression Fittings and Couplings; Swivel Type Male Stud Tees (Stud Run) with 24 Degree Cone and O-Ring and with Type W Port as in DIN 3861—1994

TABLE E10.D1 DIN Standards and Specifications for Pipe, Tube, and Fittings *(Continued)*

Numbers	Title
DIN 3945	Compression Fittings and Couplings; Swivel Type Adaptors with 24 Degree Cone and O-Ring and with Type W Port as in DIN 3861—1994
DIN 4032	Concrete Pipes and Fittings; Dimensions; Technical Conditions of Delivery—1981
DIN 7591	Water Fittings for Domestic Installation; Screwed Unions with Flat Gasket for Hose Connection on Either Side, Designed for Nominal Pressure 10—1981
DIN 7593	Water Fittings for Domestic Installation; Screwed Unions with Flat Gasket for Connection to Copper Tube on Either Side, Designed for Nominal Pressure 10—1981
DIN 8063 PT 1	Pipe Joint Assemblies and Fittings for Unplasticized Polyvinyl Chloride (U-PVC) Pressure Pipelines; Dimensions of Socket Bends—1986
DIN 8063 PT 2	Pipe Joints and Pipe Fittings for Pipes Under Pressure Made of Unplasticized Polyvinyl Chloride (Rigid PVC); Bends Made by Injection Moulding for Bonding; Dimensions—1980
DIN 8063 PT 3	Pipe Joints and Pipe Fittings for Pipes Under Pressure Made of Unplasticized Polyvinyl Chloride (Rigid PVC); Screwed Pipe Joints; Dimensions—1980
DIN 8063 PT 4	Pipe Joint Assemblies and Fittings for Unplasticized Polyvinyl Chloride (PVC-U) Pressure Pipes; Bushings, Flanges, Seals, Dimensions—1983
DIN 8063 PT 5	Pipe Joint Assemblies and Fittings for Unplasticized Polyvinyl Chloride (PVC-U) Pressure Pipes; General Quality Requirements and Testing—1990
DIN 8063 PT 6	Pipe Joints and Pipe Fittings for Pipes Under Pressure Made of Unplasticized Polyvinyl Chloride (Rigid PVC); Injection Moulded Elbows for Bonding; Dimensions—1980
DIN 8063 PT 8	Pipe Joints and Pipe Fittings for Pipes Under Pressure Made of Unplasticized Polyvinyl Chloride (Rigid PVC); Injection Moulded Sockets, Caps and Nipples for Bonding; Dimensions—1980
DIN 8063 PT 11	Pipe Joints and Pipe Fittings for Pipes Under Pressure Made of Unplasticized Polyvinyl Chloride (Rigid PVC); Sockets with Primary Element of Copper-Zinc Alloy (Brass) for Bonding; Dimensions—1980
DIN 8063 PT 12	Pipe Joint Assemblies and Fittings for Unplasticized Polyvinyl Chloride (U-PVC) Pressure Pipelines; Dimensions of Flanged and Socket Fittings—1987
DIN 8076 PT 1	Thermoplastics Pressure Pipelines; Metal Compression Fittings for Polyethylene (PE) Pipes; General Quality Requirements; Testing—1984

TABLE E10.D1 DIN Standards and Specifications for Pipe, Tube, and Fittings *(Continued)*

Numbers	Title
DIN 8906	PN 40 Flared Flange Solderless Compression Couplings for Use in Refrigerating Systems
DIN 8912	Coupling Nuts and Screwed Plugs for Use with PN 40 Flared Flange Solderless Compression Couplings in Refrigerating Systems
DIN 8914	90 Degree Tapered Seal Rings and Caps for Use with PN 40 Flared Flange Solderless Compression Couplings in Refrigerating Systems
DIN 16450	Nomenclature and Symbols for Fittings for Use with Unplasticized Polyvinyl Chloride (PVC-U) Pressure Pipes—1994
DIN 16451 PT 1	Ductile Iron (GGG) Fittings for Use with Unplasticized Polyvinyl Chloride (PVC-U) Pressure Pipes; Technical Delivery Conditions—1994
DIN 16451 PT 2	Ductile Iron (GGG) Fittings for Use with Unplasticized Polyvinyl Chloride (PVC-U); Pressure Pipes; Dimensions—1994
DIN 16867	Glass Fibre Reinforced Polyester Resin (UP-GF) Pipes, Fittings and Joints for Use in Chemical Pipelines; Technical Delivery Conditions—1982
DIN 16961 PT 1	Thermoplastics Pipes and Fittings with Profiled Outer and Smooth Inner Surfaces; Dimensions—1989
DIN 16961 PT 2	Thermoplastics Pipes and Fittings with Profiled Outer and Smooth Inner Surfaces; Technical Delivery Conditions—1989
DIN 16967 PT 2	Glass Fibre Reinforced Epoxy Resin (EP-GF) Pipe Fittings and Joints; Elbows; Tees; Dimensions—1982
DIN 19522 PT 1	Cast Iron Spigot (SML) Drainpipes and Fittings; Dimensions—1983
DIN 19522 PT 2	Cast Iron Spigot (SML) Drainpipes and Fittings; Technical Delivery Conditions—1983
DIN 19530 PT 1	Steel Socket Pipes and Fittings for Sewers; Dimensions—1983
DIN 19530 PT 2	Steel Socket Pipes and Fittings for Sewers; Technical Delivery Conditions—1983
DIN 19531	Unplasticized Polyvinyl Chloride (PVC-U) Socket Pipes and Fittings for Discharge Systems Inside Buildings; Dimensions and Technical Delivery Conditions—1987
DIN 19535 PT 1	High Density Polyethylene (HDPE) Pipes and Fittings for Hot-Water Resistant Drains and Sewers Inside Buildings; Dimensions—1988 (Together with DIN 19535 Part 2, April 1987 Edition, Supersedes DIN 19535, March 1977 Edition, Withdrawn in January 1986)

TABLE E10.D1 DIN Standards and Specifications for Pipe, Tube, and Fittings *(Continued)*

Numbers	Title
DIN 19535 PT 2	High Density Polyethylene (HDPE) Pipes and Fittings for Hot-Water Resistant (HT) Drains and Sewers Inside Buildings; Technical Delivery Conditions—1987 (Supersedes Parts of the March 1977 Edition of DIN 19535, Withdrawn in January 1986)
DIN 19537 PT 1	High Density Polyethylene (HDPE) Pipes and Fittings for Drains and Sewers; Dimensions—1983
DIN 19537 PT 2	High Density Polyethylene (HDPE) Pipes and Fittings for Drains and Sewers; Technical Delivery Conditions—1988
DIN 19538	Chlorinated Polyvinyl Chloride (CPVC) Pipes and Fittings with Sockets for Hot Water Resistant (HT) Sanitary Pipework Inside Buildings; Dimensions, Technical Delivery Conditions—1980
DIN 19565 PT 1	Centrifugally Cast and Filled Polyester Resin Glass Fibre Reinforced (UP-GF) Pipes and Fittings for Buried Drains and Sewers; Dimensions and Technical Delivery Conditions—1989; Partially Superseded by DIN EN 1115-3, November 1996 Edition, and DIN EN 1115-5, November 1996 Edition
DIN 19800 PT 1	Asbestos Cement Pipes and Fittings for Pressure Pipelines; Pipes; Dimensions—1973
DIN 19800 PT 3	Asbestos Cement Pipes and Fittings for Pressure Pipelines; Joint Assemblies; Dimensions—1979
DIN 19850-1	Fibre Cement Pipes and Fittings for Drains and Sewers; Part 1: Dimensions of Pipes, Branches and Bends—1996
DIN 24147 PT 1	Fittings for Use in Air Distribution Systems; Overview and Dimensions—1993
DIN 24147 PT 2	Fittings for Use in Air Distribution Systems; Bends
DIN 24147 PT 3	Fittings for Use in Air Distribution Systems; Gusseted Bends
DIN 24147 PT 4	Fittings for Use in Air Distribution Systems; Tapers
DIN 24147 PT 6	Fittings for Use in Air Distribution Systems; 90 Degree and 45 Degree Branches (Tees and Angled Branches)
DIN 24147 PT 7	Fittings for Use in Air Distribution Systems; Reducers with 90 Degree Branch and Crosses (June)
DIN 28600	Ductile Iron Pressure Pipes and Fittings for Gas and Water Pipelines; Technical Delivery Conditions—1983 (Superseded in Part by DIN EN 545, January 1995 Edition, and DIN EN 969, November 1995 Edition)

TABLE E10.D1 DIN Standards and Specifications for Pipe, Tube, and Fittings *(Continued)*

Numbers	Title
DIN 28603	Ductile Cast Iron Pipes and Fittings; Spigot and Socket Joints; Connecting Dimensions and Masses—1982
DIN 28624	Ductile Iron Collars for Use with Gas and Water Pipes; Dimensions and Mass (Superseded in Part by DIN EN 545, and DIN EN 969, November 1995 Edition)
DIN 28631	Ductile Iron Spigot and Socket Fittings with Branch for Gas and Water Pipelines; Dimensions and Requirements—1996
DIN 28633	Ductile Iron Double Spigot Fittings with Branch for Gas and Water Pipelines; Dimensions and Requirements—1996
DIN 28645	Ductile Iron Double-Flanged Tapers for Use with Gas and Water Pipes; Dimensions and Mass (Superseded in Part by DIN EN 545, January 1995 Edition, and DIN EN 969, November 1995 Edition)
DIN 30670	Polyethylene Coatings for Steel Pipes and Fittings; Requirements and Testing—1991 (Supersedes July 1980 Edition)
DIN 30673	Bitumen Coatings and Linings for Steel Pipes, Fittings and Vessels—1986
DIN 53769 PT 1	Testing of Glass Fibre Reinforced Plastics Pipes; Determination of the Longitudinal Shear Strength of Type B Pipe Fittings—1988
DIN 53769 PT 6	Testing of Glass Fibre Reinforced Plastics Pipes; Testing of Pipes and Fittings Under Pulsating Internal Pressure—1989
DIN 86086	Copper-Nickel Alloy Welding Pipe Fittings; Technical Delivery Conditions—1990
DIN EN 295-4	Vitrified Clay Pipes and Fittings and Pipe Joints for Drains and Sewers; Requirements for Special Fittings, Adaptors and Compatible Accessories—1995 (Intended to Supersede DIN 1230 PT 1 and DIN 1230 PT 6, February 1992 Editions)
DIN EN 295-6	Vitrified Clay Pipes and Fittings and Pipe Joints for Drains and Sewers; Requirements for Vitrified Clay Manholes—1995 (Supersedes DIN 1230 PT 9, November 1990 Edition)
DIN EN 295-7	Vitrified Clay Pipes and Fittings and Pipe Joints for Drains and Sewers; Requirements for Vitrified Clay Pipes and Joints for Pipe Jacking—1995
DIN EN 295 PT 5	Vitrified Clay Pipes and Fittings and Pipe Joints for Drains and Sewers; Requirements for Perforated Vitrified Clay Pipes and Fittings—1994

TABLE E10.D1 DIN Standards and Specifications for Pipe, Tube, and Fittings *(Continued)*

Numbers	Title
DIN EN 545	Ductile Iron Pipes, Fittings, Accessories and Their Joints for Water Pipelines; Requirements and Test Methods—1995 (Supersedes Parts of DIN 2614, February 1990 Edition, DIN 28600 and DIN 28610 PT 1 January 1983 Editions, DIN 28614, DIN 28615 PT 1, DIN 28615 PT 2, DIN 28622, DIN 28623, DIN 28624, DIN 28625, DIN 28626, DIN 28628, DIN 28629, DIN 28630, DIN 28632, DIN 28634, DIN 28637, DIN 28638)
DIN EN 578	Plastics Piping Systems; Plastics Pipes and Fittings; Determination of the Opacity—1993
DIN EN 588-1	Fibre-Cement Pipes for Drains and Sewers; Pipes, Joints and Fittings for Gravity Systems—1996
DIN EN 598	Ductile Iron Pipes, Fittings, Accessories and Their Joints in Sewerage Applications; Requirements and Test Methods—1994 (Supersedes DIN 19690, DIN 19691, DIN 19692 PT 1, and DIN 19692 PT 2, July 1978 Editions)
DIN EN 607	PVC-U Eaves Gutters and Fittings; Definitions, Requirements and Testing—1995 (Supersedes DIN 18469 May 1988 Edition)
DIN EN 639	Requirements for Concrete Pressure Pipes Including Joints and Fittings—1994 (Together with DIN EN 640, December 1994 Edition, Supersedes DIN 4035, July 1990 Edition)
DIN EN 640	Reinforced Concrete Pressure Pipes and Distributed Reinforcement Concrete Pressure Pipes (Non-Cylinder Type), Including Joints and Fittings—1994 (Together with DIN EN 639, December 1994 Edition, Supersedes DIN 4035, July 1990 Edition)
DIN EN 641	Reinforced Concrete Pressure Pipes, Cylinder Type, Including Joints and Fittings—1994
DIN EN 642	Prestressed Concrete Pressure Pipes, Cylinder and Non-Cylinder Types, Including Joints, Fittings and Specific Requirements for Prestressing Steel for Pipes—1994
DIN EN 705	Glass-Reinforced Thermosetting Plastics (GRP) Pipes and Fittings; Methods for Regression Analyses and Their Use—1994
DIN EN 713	Mechanical Joints Between Fittings and Polyolefin Pressure Pipes; Test Method for Leaktightness Under Internal Pressure of Assemblies Subjected to Bending—1994
DIN EN 714	Not End-Loadbearing Elastomeric Sealing Ring Type Joints Between Thermoplastic Pressure Pipes and Fittings; Test Method for Leaktightness Under Internal Hydrostatic Pressure without End Thrust—1994

TABLE E10.D1 DIN Standards and Specifications for Pipe, Tube, and Fittings *(Continued)*

Numbers	Title
DIN EN 715	End-Load Bearing Joints Between Small Diameter Thermoplastics Pressure Pipes and Fittings; Test Method for Leaktightness Under Internal Water Pressure, Including End Thrust—1994
DIN EN 723	Combustion Method for Determination of Carbon on the Inner Surface of Copper Tubes or Fittings—1996
DIN EN 727	Thermoplastics Pipes and Fittings; Determination of Vicat Softening Temperature (VST)—1995
DIN EN 728	Plastics Piping and Ducting Systems; Polyolefin Pipes and Fittings; Determination of Oxidation Induction Time—1997
DIN EN 763	Injection-Moulded Thermoplastics Pipe Fittings; Test Method for Visually Assessing Effects of Heating—1994
DIN EN 802	Injection-Moulded Thermoplastics Fittings for Pressure Piping Systems; Test Method for Maximum Deformation by Crushing—1994
DIN EN 803	Injection-Moulded Thermoplastics Fittings for Elastic Sealing Ring Type Joints for Pressure Piping; Test Method for Resistance to a Short-Term Internal Pressure without End Thrust—1994
DIN EN 804	Injection-Moulded Plastics Socket Fittings for Solvent-Cemented Joints for Pressure Piping; Test Method for Resistance to a Short-Term Internal Hydrostatic Pressure—1994
DIN EN 922	Unplasticized Polyvinyl Chloride (PVC-U) Pipes and Fittings; Specimen Preparation for Determination of the Viscosity Number and Calculation of the K-Value—1995
DIN EN 969	Ductile Iron Pipes, Fittings, Accessories and Their Joints for Gas Pipelines; Requirements and Test Methods—1995 (Supersedes DIN 28610 PT 2, January 1983 Edition, and Parts of DIN 28600 and DIN 28610 PT 1, January 1983 Editions, DIN 28614, DIN 28615 PT 1, DIN 28615 PT 2, DIN 28622, DIN 28623, DIN 28624, DIN 28625, DIN 28626, DIN 28628, DIN 28629, DIN 28630, DIN 28632, DIN 28634, DIN 28637)
DIN EN 1056	Plastic Pipe and Fittings; Method for Exposure to Direct (Natural) Weathering—1996
DIN EN 1115-3	Piping Systems for Underground Drainage and Sewerage Under Pressure Made of Glass-Reinforced Thermosetting Plastics (GRP) Based on Unsaturated Polyester (UP) Resin; Fittings—1996; Supersedes Parts of DIN 19565-1, March 1989 Edition

TABLE E10.D1 DIN Standards and Specifications for Pipe, Tube, and Fittings *(Continued)*

Numbers	Title
DIN EN 1119	Joints for Glass-Reinforced Thermosetting Plastics (GRP) Pipes and Fittings; Testing for Leaktightness and Resistance to Damage of Flexible and Reduced-Articulation Joints—1996
DIN EN 1120	Glass-Reinforced Thermosetting Plastics (GRP) Pipes and Fittings Determination of the Resistance to Chemical Attack from the Inside of a Section in a Deflected Condition—1996
DIN EN 1229	Glass-Reinforced Thermosetting Plastics (GRP) Pipes and Fittings; Test Methods to Prove the Leaktightness of the Wall Under Short-Term Internal Pressure—1996
DIN LN 29855	Fitting Assembly, Ring Locked, for Solderless Pipe Fittings with Coupling Sleeves; Flareless; Complete Fitting—1974
DIN LN 29856	Unions, Ring Locked for Solderless Pipe Fittings with Coupling Sleeves; Flareless—1974
DIN LN 29859	Unions, Ring Locked for Solderless Pipe Fittings with Coupling Sleeves; Flareless; Directions for Installation—1974
DIN 16962 PT 4	Pipe Joint Assemblies and Fittings for Types 1 and 2 Polypropylene (PP) Pressure Pipes; Adaptors for Fusion Jointing, Flanges and Sealing Elements; Dimensions—1988
DIN 16963 PT 4	Pipe Joint Assemblies and Fittings for High-Density Polyethylene (PE-HD) Pressure Pipes; Adaptors for Fusion Jointing, Flanges and Sealing Elements; Dimensions—1988
DIN 16966 PT 6	Glass Fibre Reinforced Polyester Resin (UP-GF) Pipe Fittings and Joint Assemblies; Collars, Flanges, Joint Rings, Dimensions

TABLE E10.D2 DIN Standards and Specifications for Flanges, Bolts, Nuts, and Gaskets

Numbers	Title
DIN 2500	Flanges; General Information; Survey—1966
DIN 2501 PT 1	Flanges; Mating Dimensions—1972
DIN 2505 (D)	Flanged Joint Calculation January
DIN 2512	Flanges; Tongue and Groove; Nominal Pressures 10 to 160; Design Sizes; Rings—1975
DIN 2513	Flanges; Projection and Recess; Nominal Pressures 10 to 100; Design Dimensions—1966
DIN 2514	Flanges; Projection with Groove and Recess; Nominal Pressures 10 to 40; Design Dimensions—1975
DIN 2519	Steel Flanges; Technical Conditions of Delivery—1966
DIN 2526	Flanges; Types of Contact Surfaces—1975
DIN 2527	Blank Flanges; Nominal Pressure 6 to 100—1972
DIN 2528	Steel Flanges; Technical Delivery Conditions—1991
DIN 2543	Cast Steel Flanges; Nominal Pressure 16—1977
DIN 2558	Plain Face Oval Screwed Flanges; Nominal Pressure 6—1975
DIN 2561	Oval Screwed Flanges with Socket; Nominal Pressure 10 and 16—1975
DIN 2566	Screwed Flanges with Socket; Nominal Pressure 10 and 16—1975
DIN 2573	Plain Face Flanges for Brazing or Welding; Nominal Pressure 6—1975
DIN 2576	Flanges, Slip-on Type for Brazing or Welding; Nominal Pressure 10—1975
DIN 2627	Welding Neck Flanges; Nominal Pressure 400—1975
DIN 2628	Welding Neck Flanges; Nominal Pressure 250—1975
DIN 2629	Welding Neck Flanges; Nominal Pressure 320—1975
DIN 2630	Welding Neck Flanges; Nominal Pressure 1 and 2.5—1975
DIN 2631	Welding Neck Flanges; Nominal Pressure 6—1975
DIN 2632	Welding Neck Flanges; Nominal Pressure 10—1975
DIN 2633	Welding Neck Flanges; Nominal Pressure 16—1975
DIN 2634	Welding Neck Flanges; Nominal Pressure 25—1975
DIN 2635	Welding Neck Flanges; Nominal Pressure 40—1975
DIN 2636	Welding Neck Flanges; Nominal Pressure 64—1975
DIN 2637	Welding Neck Flanges; Nominal Pressure 100—1975
DIN 2638	Welding Neck Flanges; Nominal Pressure 160—1975
DIN 2641	Lapped Flanges; Welding Neck Flanges; Plain Collars; Nominal Pressure 6—1975
DIN 2642	Slip-on Flanges; Upturned Welding Flanges; Plain Collars; Nominal Pressure 10—1975

TABLE E10.D2 DIN Standards and Specifications for Flanges, Bolts, Nuts, and Gaskets *(Continued)*

Numbers	Title
DIN 2655	Lapped Flanges; Plain Collars; Nominal Pressure 25—1975
DIN 2656	Lapped Flanges; Plain Collars; Nominal Pressure 40—1975
DIN 2673	Loose Flanges with Welding Neck; Nominal Pressure 10—1962
DIN 2693	Sealing Rings for Flanges with Groove; Nominal Pressures from 10 to 40—1967
DIN 2695	Diaphragm Packings and Diaphragm Weld Seals for Flanged Connections; Nominal Pressure 64 to 400
DIN 3337	Connections for Part-Turn Valve Actuator Attachment; Dimensions of Driving Components and Flanges—1985
DIN 6352 PT 1	Chuck Backplates with 1:4 Locating Taper; Basic Flanges—1968
DIN 8063 PT 4	Pipe Joint Assemblies and Fittings for Unplasticized Polyvinyl Chloride (PVC-U) Pressure Pipes; Bushings, Flanges, Seals; Dimensions—1983
DIN 16872	Glass Fibre Reinforced Polyester Resin (UP-GRP) Flanges; for Use for Thermoplastics Pipe Fittings; Dimensions—1993
DIN 16962 PT 4	Pipe Joint Assemblies and Fittings for Types 1 and 2 Polypropylene (PP) Pressure Pipes; Adaptors for Fusion Jointing, Flanges and Sealing Elements; Dimensions—1988
DIN 16962 PT 12	Pipe Joints and Elements for Polypropylene (PP) Pressure Pipelines; Types 1 and 2; Bushes, Flanges and Seals for Socket-Welding; Dimensions—1980
DIN 16963 PT 4	Pipe Joint Assemblies and Fittings for High-Density Polyethylene (PE-HD) Pressure Pipes; Adaptors for Fusion Jointing, Flanges and Sealing Elements; Dimensions—1988
DIN 16963 PT 11	Pipe Joints and Elements for High Density Polyethylene (HDPE) Pressure Pipelines; Types 1 and 2; Bushes, Flanges and Seals for Socket-Welding; Dimensions—1980
DIN 16966-7	Glass Fibre Reinforced Polyester Resin (UP-GRP) Pipe Fittings and Joint Assemblies; Requirements for and Testing of Bushes, Flanges, and Flanged and Laminated Joints—1995
DIN 16966 PT 6	Glass Fibre Reinforced Polyester Resin (UP-GF) Pipe Fittings and Joint Assemblies; Collars, Flanges, Joint Rings, Dimensions—1982
DIN 28031	Flanges for Welding for Use on Unalloyed and Stainless Steel Vessels Not Subject to Pressure—1989

TABLE E10.D2 DIN Standards and Specifications for Flanges, Bolts, Nuts, and Gaskets *(Continued)*

Numbers	Title
DIN 28032	Flanges for Welding for Use on Unalloyed Steel Pressure Vessels—1989
DIN 28034	Weld-Neck Flanges for Use on Unalloyed Steel Pressure Vessels—1989
DIN 28036	Flanges for Welding for Use on Stainless Steel Pressure Vessels—1989
DIN 28038	Flanges for Welding, with Cylindrical Hub, for Use on Stainless Steel Pressure Vessels—1989
DIN 28117	PN 10 to PN 40 Loose Flanges—1990
DIN 28122	Blank Flanges with Stainless Steel Facing, of Nominal Sizes DN 125 to DN 500 and Rated for Nominal Pressures PN 10 to PN 40—1987
DIN 28141	Connecting Flanges for Unalloyed and Stainless Steel Mixing Vessels for Use in Process Engineering—1992
DIN 28404	Vacuum Technology; Flanges; Dimensions—1984
DIN 28614	Ductile Iron Pipes with Cast-On Flanges for Use with Gas and Water Pipelines; Dimensions and Mass—1990 (Superseded in Part by DIN EN 545, January 1995 Edition, and DIN EN 969, November 1995 Edition)
DIN 28615 PT 1	Ductile Iron Pipes with Welded-On Flanges for Use With Gas and Water Pipelines; Dimensions and Mass—1990 (Together with the January 1990 Edition of DIN 28615 Part 2, Supersedes the March 1976 Edition of DIN 28615) (Superseded in Part by DIN EN 545, January 1995 Edition, and DIN EN 969, November 1995 Edition)
DIN 28615 PT 2	Ductile Iron Pipes with Screwed-On Flanges for Use With Gas and Water Pipelines; Dimensions and Mass—1990 (Together with the January 1990 Edition of DIN 28615 Part 1, Supersedes the March 1976 Edition of DIN 28615) (Superseded in Part by DIN EN 545, January 1995 Edition, and DIN EN 969, November 1995 Edition)
DIN 28646	Ductile Iron Blank Flanges for Use with Gas and Water Pipes; Dimensions and Mass—1990 (Superseded in Part by DIN EN 545, January 1995 Edition, and DIN EN 969, November 1995 Edition)
DIN 86037 PT 1	Loose Flanges and Welded Stub Ends for Pipes of Forged Copper Alloys; Nominal Pressures 10, 16 and 25; Summary—1978
DIN 86037 PT 2	Loose Flanges and Welded Stub Ends for Pipes of Forged Copper Alloys; Nominal Pressures 10, 16 and 25; Welded Stub Ends—1978
DIN 86037 PT 3	Loose Flanges and Welded Stub Ends for Pipes of Forged Copper Alloys; Nominal Pressures 10, 16 and 25; Loose Flanges—1978

TABLE E10.D2 DIN Standards and Specifications for Flanges, Bolts, Nuts, and Gaskets *(Continued)*

Numbers	Title
DIN 86041 PT 1	Welding Flanges for Tanks and Sea Boxes; Nominal Pressure 10 and 16—1976
DIN 86041 PT 2	Welding Flanges for Outboard Connections; Nominal Pressure 10, 16, 40, 160—1977
DIN 86042	Dummy Hole Plates (Spectacle Flanges); Mating Dimensions According to Nominal Pressure 10 and 16—1978
DIN 13 PT 13	ISO Metric Screw Threads; Selected Sizes for Screws, Bolts and Nuts from 1 to 52 mm Screw Thread Diameter and Limits of Sizes—1983
DIN 13 PT 51	ISO Metric Screw Threads; External Threads for Transition Fits; Tolerances, Limit Deviations, Limits of Size
DIN 74 PT 3	Counterbores (Holes) for Hexagon Bolts and Nuts—1991
DIN 103 PT 7	ISO Metric Trapezoidal Screw Threads; Limiting Sizes for Bolt Threads from 8 to 100 mm Nominal Diameter
DIN 103 PT 8	ISO Metric Trapezoidal Screw Threads; Limiting Sizes for Bolt Threads from 105 to 300 mm Nominal Diameter
DIN 125 PT 1	Product Grade A Washers with a Hardness up to 250 HV Designed for Use with Hexagon Head Bolts and Nuts—1990
DIN 125 PT 2	Product Grade A Washers with a Hardness up to 300 HV Designed for Use with Hexagon Head Bolts and Nuts—1990
DIN 126	Product Grade C Washers; Designed for Use with Hexagon Head Bolts and Nuts—1990
DIN 186	T-Head Bolts with Square Neck—1988
DIN 188	T-Head Bolts with Double Nib—1987
DIN 261	T-Head Bolts—1987
DIN 267 PT 3	Fasteners; Technical Delivery Conditions; Property Classes for Carbon Steel and Alloy Steel Bolts and Screws; Conversion of Property Classes—1983
DIN 267 PT 12	Bolts, Screws, Nuts and Similar Threaded and Formed Parts; Technical Conditions of Delivery; Self-Tapping Screws
DIN 267 PT 25 (P)	Fasteners; Technical Delivery Conditions; Torsion Testing of M 1 to M 10 Bolts and Screws—1984
DIN 267 PT 27	Fasteners; Adhesive-Coated Steel Screws, Bolts and Studs; Technical Delivery Conditions—1990
DIN 267 PT 28	Fasteners; Steel-Screws, Bolts and Studs with Locking Coating; Technical Delivery Conditions—1990

TABLE E10.B2 DIN Standards and Specifications for Flanges, Bolts, Nuts, and Gaskets *(Continued)*

Numbers	Title
DIN 478	Square Head Bolts with Collar—1985
DIN 479	Square Head Bolts with Short Dog Point—1985
DIN 480	Square Head Bolts with Collar and Oval Half Dog Point—1985
DIN 522	Metal Washers; Technical Delivery Conditions
DIN 603	Mushroom Head Square Neck Bolts—1981
DIN 604	Flat Countersunk Nib Bolts—1981
DIN 605	Flat Countersunk Square Neck Bolts with Long Square—1981
DIN 607	Cup Head Nib Bolts—1981
DIN 608	Flat Countersunk Square Neck Bolts with Short Square—1981
DIN 609	Hexagon Fit Bolts—1995
DIN 610	Hexagon Fit Bolts with Short Threaded Dog Point
DIN 649	T-Slots for T-Head Bolts—1987
DIN 787	Tee Bolts May; ISO 299: 1987—1991
DIN 797	Special Foundation Bolts—1970
DIN 798	Special Foundation Nuts for Special Foundation Bolts According to DIN 797
DIN 931 PT 2	M 42 to M 160x6 Hexagon Head Bolts; Product Grade B—1987
DIN 931 SUPPL. 1	Hexagon Head Bolts with Shank; Masses—1986
DIN 974 PT 2	Diameters of Counterbores (Holes) for Hexagon Bolts and Nuts—1991
DIN 976-1	Metric Thread Stud Bolts—1995
DIN 976-2	Metric Interference-Fit Thread Stud Bolts—1995
DIN 1441	Washers; Type Coarse for Bolts—1974
DIN 2507	Bolts, Screws and Nuts for Pipelines—1986
DIN 2510 PT 3	Bolted Connections with Reduced Shank; Stud-Bolts—1971
DIN 6921	Hexagon Flange Bolts
DIN 6922	Hexagon Flange Bolts with Reduced Shank
DIN 7349	Plain Washers for Bolts with Heavy Clamping Sleeves—1974
DIN 7500-1	Thread Rolling Screws for ISO Metric Screw Thread; Dimensions, Requirements and Testing
DIN 7992	T-Head Bolts with Large Head—1970
DIN 17111	Low Carbon Unalloyed Steels for Bolts, Nuts and Rivets; Technical Conditions of Delivery—1980
DIN 17240	Heat Resisting and Highly Heat Resisting Materials for Bolts and Nuts; Quality Specifications—1976

TABLE E10.B2 DIN Standards and Specifications for Flanges, Bolts, Nuts, and Gaskets *(Continued)*

Numbers	Title
DIN EN 20225	Fasteners Bolts, Screws, Studs and Nuts; Symbols and Designations for Dimensioning (ISO 225: 1983)—1992 (Supersedes DIN ISO 225, January 1984 Edition)
DIN EN 20273	Fasteners; Clearance Holes for Bolts and Screws (ISO 273: 1979) (Supersedes DIN ISO 273, September 1979 Edition)—1992
DIN EN 20898-7	Mechanical Properties of Fasteners; Torsional Test and Minimum Torques for Bolts and Screws with Nominal Diameters 1 mm to 10 mm (ISO 898-7: 1992)—1995
DIN EN 20898 PT 1	Mechanical Properties of Fasteners; Bolts, Screws and Studs (ISO 898-1: 1988)—1992 (Supersedes DIN ISO 898 Part 1, January 1989 Edition)
DIN EN 24014	Hexagon Head Bolts; Product Grades A and B; (ISO 4014: 1988)—1992 Supersedes DIN 931 Part 1, September 1987 Edition, and DIN ISO 4014, September 1989 Edition)
DIN EN 24015	Hexagon Head Bolts with Reduced Shank; (Shank Diameter = Pitch Diameter; Product Grade B (ISO 4015: 1979)—1991
DIN EN 24016	Hexagon Head Bolts Product Grade C (ISO 4016: 1988)—1992 (Supersedes DIN 601 September 1987 Edition, and DIN ISO 4016, October 1989 Edition)
DIN EN 26157 PT 1	Fasteners; Surface Discontinuities; Bolts, Screws and Studs Subject to General Requirements (ISO 6157-1: 1988)—1991 (Together with the December 1991 Edition of DIN EN 26157 Part 3, Supersedes October 1984 Edition of DIN 267 Part 19)
DIN EN 26157 PT 3	Fasteners; Surface Discontinuities; Bolts, Screws and Studs Subject to Special Requirements (ISO 6157-3: 1988)—1991 (Together with the December 1991 Edition of DIN EN 26157 Part 1, Supersedes October 1984 Edition of DIN 267 Part 19)
DIN EN 28765	Hexagon Head Bolts with Metric Fine Pitch Thread; Product Grades A and B (ISO 8765: 1988)—1992 (Supersedes DIN 960, January 1990 Edition, and DIN ISO 8765, January 1990 Edition)
DIN EN 28839	Mechanical Properties of Fasteners; Nonferrous Metal Bolts, Screws, Studs and Nuts (ISO 8839: 1986)—1991 (Supersedes February 1981 Edition of DIN 267 Part 18)
DIN LN 29962	Bolts and Accessories; Additional Procurement Data for Special Designs and Arrangement of Code Letters in Characteristic Blocks—1976
DIN LN 65010 PT 1	Specification for Screws and Bolts of Unalloyed and Low-Alloy Steel with Minimum Tensile Strength up to 900N/mm^2—1968

TABLE E10.D2 DIN Standards and Specifications for Flanges, Bolts, Nuts, and Gaskets *(Continued)*

Numbers	Title
DIN LN 65010 PT 2	Specification for Screws and Bolts of Unalloyed and Low-Alloy Steel with Minimum Tensile Strength up to 900N/mm^2, Minimum Ultimate Tensile Loads, Proof Loads—1968
DIN LN 65018 PT 1	Manufacturer's Acceptance Certificate for Screws and Bolts—1968
DIN LN 65019	Bolts, Countersunk Head with TORQ-Set Recess—1977
DIN 2696	Lenticular Gaskets and Lenticular Seals for ND 64 to ND 400 Flanged Connections—1972
DIN 2698	Corrugated Steel Sheet Gaskets Incorporating Asbestos Ropes for ND 25 to ND 250 Flanged Connections—1972
DIN 3535 PT 6	Synthetic Fibre and Graphite Based Gasket Materials for Use with Gas Valves, Gas Appliances and Gas Pipework
DIN 7603	Ring Seals and Gaskets—1994
DIN 8914	90 Degree Tapered Seal Rings and Caps for Use with PN 40 Flared Flange Solderless Compression Couplings in Refrigerating Systems
DIN 28040	Gaskets for Use with Flanged Joints—1989
DIN 28090-1	Static Seals for Flanged Connections; Characteristic Values and Test Methods
DIN 28090-2	Static Seals for Flanged Connections; In-Process Testing of Sheet Gasket Materials
DIN 28090-3	Static Seals for Flanged Connections; Chemical Resistance of Sheet Gasket Materials
DIN 87107	Gaskets for Non-Return Flaps in Accordance with DIN 87101—1975
DIN EN 1514-1	Flanges and Their Joints Dimensions of Gaskets for PN-Designated Flanges Part 1: Non-Metallic Flat Gaskets with or without Inserts August; Supersedes DIN EN 2690 and DIN 2692 May 1966 and DIN 2691 November 1971—1997
DIN EN 1514-2	Flanges and Their Joints Dimensions of Gaskets for PN-Designated Flanges Part 2: Spiral Wound Gaskets for Use with Steel Flanges—1997
DIN EN 1514-3	Flanges and Their Joints Dimensions of Gaskets for PN-Designated Flanges Part 3: Non-Metallic PTFE Envelope Gaskets—1997
DIN EN 1514-4	Flanges and Their Joints Dimensions of Gaskets for PN-Designated Flanges Part 4: Corrugated, Flat or Grooved Metallic and Filled Metallic Gaskets for Use with Steel Flanges—1997

TABLE E10.D3 DIN Standards and Specifications for Valves

Numbers	Title
DIN 475 PT 1	Widths Across Flats for Bolts, Screws, Valves and Fittings—1984
DIN 477 PT 1	Gas Cylinder Valves Rated for Test Pressures up to 300 Bar; Types, Sizes and Outlets—1990; Superseded in Part by DIN EN 629-1—August 1996 Edition
DIN 477 PT 5	Gas Cylinder Valves Rated for Test Pressures up to 450 Bar; Types, Sizes and Outlets—1990
DIN 1690 PT 10	Technical Delivery Conditions for Castings of Metallic Materials; Supplementary Requirements for Steel Castings Used for Heavy-Duty Valves—1991
DIN 1997 PT 1	Shut-Off Valves for Site Drainage Systems; Backflow Gates for Non-Faecal Sewage; Requirements, Design Principles and Materials—1984
DIN 1997 PT 2	Shut-Off Valves for Site Drainage Systems; Backflow Gates for Non-Faecal Sewage; Testing—1984
DIN 3158	Valves for Use in Refrigerating Systems; Safety Requirements, Testing and Marking—1987
DIN 3202 PT 2	End-To-End and Centre-To-End Dimensions of Valves; Weld-On Valves—1982
DIN 3202 PT 4	Face-To-Face and Centre-To-Face Dimensions of Valves; Valves With Female Thread Connection—1982
DIN 3202 PT 5	Face-To-Face and Centre-To-Face Dimensions of Valves; Valves for Connection With Compression Couplings—1984
DIN 3230 PT 1	Technical Conditions of Delivery for Valves; Enquiry, Order and Delivery—1974
DIN 3230 PT 2	Technical Conditions of Delivery for Valves; General Requirements—1974
DIN 3230 PT 3	Technical Delivery Conditions for Valves; Compilation of Test Methods—1982
DIN 3230 PT 4	Technical Conditions of Delivery for Valves; Valves for Potable Water Service; Requirements and Testing—1977
DIN 3230 PT 5	Technical Delivery Conditions; Valves for Gas Installations and Gas Pipelines; Requirements and Testing—1984
DIN 3230 PT 6	Technical Delivery Conditions for Valves; Requirements and Methods of Test for Valves for Use with Flammable Liquids—1987
DIN 3239 PT 2	Weld-On Ends of Valves for Socket Welding—1978
DIN 3266 PT 1	Valves for Drinking Water Installations on Private Premises; PN 10 Pipe Interrupters, Pipe Disconnectors, Anti-Vacuum Valves—1986

TABLE E10.D3 DIN Standards and Specifications for Valves *(Continued)*

Numbers	Title
DIN 3266 PT 2	Valves for Drinking Water Installations on Private Premises; PN 10 Pipe Interrupters, Pipe Disconnectors, Anti-Vacuum Valves; Testing—1987
DIN 3339	Valves; Body Component Materials—1984
DIN 3352 PT 1	Gate Valves; General Information—1979
DIN 3352 PT 2	Cast Iron Gate Valves with Metallic Seat and Inside Screw Stem—1988
DIN 3352 PT 3	Cast Iron Gate Valves with Metallic Seat and Outside Screw Stem—1988
DIN 3352 PT 4	Cast Iron Gate Valves with Elastomeric Obturator Seatings and Inside Screw Stem—1986
DIN 3352 PT 6	Gate Valves of Unalloyed and Low-Alloyed Steel with Internal Stem Thread—1979
DIN 3352 PT 7	Gate Valves of Unalloyed and Low-Alloyed Steel with External Stem Thread—1979
DIN 3352 PT 9	Gate Valves of Heat-Resistant Steel—1979
DIN 3352 PT 10	Gate Valves of Stainless Steel—1979
DIN 3352 PT 11	Flanged Copper Alloy Gate Valves—1981
DIN 3352 PT 12	Socket End Copper Alloy Gate Valves—1981
DIN 3352 PT 13	Double-Socket Cast Iron Gate Valves with Elastomeric Obturator Seat and Inside Screw Stem—1987
DIN 3354 PT 1	Butterfly Valves; General Data
DIN 3354 PT 2	Butterfly Valves; Soft Material Seat Seal Cast Iron Tight Butterfly Shutoff Valves with Flanged Ends
DIN 3354 PT 3	Butterfly Valves; Soft Material Seat Seal Steel or Cast Steel Tight Butterfly Shutoff Valves with Flanged Ends or Weld-on-Ends
DIN 3354 PT 4	Butterfly Valves; Metallic Seat Seal Steel or Cast Steel Tight Butterfly Shutoff Valves with Flanged Ends or Weld-on Ends
DIN 3356 PT 1	Globe Valves; General Data—1982
DIN 3356 PT 2	Globe Valves; Cast Iron Stop Valves—1982
DIN 3356 PT 3	Globe Valves; Unalloyed Steel Stop Valves—1982
DIN 3356 PT 4	Globe Valves; High Temperature Steel Stop Valves—1982
DIN 3356 PT 5	Globe Valves; Stainless Steel Stop Valves—1982
DIN 3357 PT 1	Metal Ball Valves; General Requirements and Methods of Test—1989
DIN 3357 PT 2	Full Bore Steel Ball Valves—1981
DIN 3357 PT 3	Reduced Bore Steel Ball Valves—1981

TABLE E10.D3 DIN Standards and Specifications for Valves *(Continued)*

Numbers	Title
DIN 3357 PT 4	Full Bore Nonferrous Metal Ball Valves—1981
DIN 3357 PT 5	Reduced Bore Nonferrous Metal Ball Valves—1981
DIN 3357 PT 6	Full Bore Cast Iron Ball Valves
DIN 3357 PT 7	Reduced Bore Cast Iron Ball Valves
DIN 3381	Safety Devices for Gas Supply Installations Operating at Working Pressures up to 100 Bar; Pressure Relief Governors and Safety Shut-Off Devices
DIN 3399	Gas Low-Pressure Cut-Off Valves; Safety Requirements, Testing—1986
DIN 3441 PT 1	Unplasticized Polyvinyl Chloride (PVC-U) Valves; Requirements and Testing—1989
DIN 3441 PT 2	Unplasticized Polyvinyl Chloride (PVC-U) Valves; Ball Valves; Dimensions—1984
DIN 3441 PT 3	Unplasticized Polyvinyl Chloride (PVC-U) Valves; Diaphragm Valves; Dimensions—1984
DIN 3441 PT 4	Valves of Rigid PVC (Unplasticized or Rigid Polyvinyl Chloride); Y-Valves (Inclined-Seat Valves), Dimensions—1978
DIN 3441 PT 5	Unplasticized Polyvinyl Chloride (PVC-U) Valves; PN 6 and PN 10 Wafer Type Bufferfly Valves; Dimensions—1984
DIN 3441 PT 6	Unplasticized Polyvinyl Chloride (UPVC) Valves; Gate Valves with Inside Screw Stem Dimensions—1988
DIN 3442 PT 1	Polypropylene (PP) Valves; Requirements and Testing—1987
DIN 3442 PT 2	Fittings of PP (Polypropylene); Ball Valves; Dimensions—1980
DIN 3442 PT 3	Polypropylene (PP) Valves; Diaphragm Valves; Dimensions—1987
DIN 3475	Spheroidal Graphite Cast Iron Valves and Fittings Provided with Internal Corrosion Protection by means of Enamelling, for Use in Drinking Water Supply Systems; Requirements and Testing—1993
DIN 3476	Corrosion Protection of Water Valves and Pipe Fittings by Epoxy Powder or Liquid Epoxy Resin Linings; Requirements and Testing—1996
DIN 3500	PN 10 Piston Type Gate Valves for Use in Drinking Water Supply Systems—1990
DIN 3502	Stop Valves for Drinking Water Supplies on and in Private Property; Straight Pattern Globe Valves with Oblique Bonnet, Rated for Nominal Pressure PN 10—1985

TABLE E10.D3 DIN Standards and Specifications for Valves *(Continued)*

Numbers	Title
DIN 3512	Stop Valves for Drinking Water Supplies on and in Private Property; Straight Pattern Globe Valves with Vertical Bonnet, Rated for Nominal Pressure PN 10—1985
DIN 3535 PT 5	Rubber/Cork and Rubber/Cork Synthetic Fibre Based Gasket Materials for Use With Gas Valves, Gas Appliances and Gas Pipework; Safety Requirements and Testing—1993
DIN 3535 PT 6	Synthetic Fibre and Graphite Based Gasket Materials for Use with Gas Valves, Gas Appliances and Gas Pipework—1994
DIN 3536	Lubricants for Gas Valves and Controls; Requirements, Testing—1982, Superseded in Parts By EN 377
DIN 3537 PT 3	Gas Stop Valves Rated for Pressures up to 4 Bar; Requirements and Acceptance Testing for Laboratory Valves—1992
DIN 3543 PT 1	Metal Tapping Valves; Requirements, Testing—1984
DIN 3543 PT 4	High Density Polyethylene (HDPE) Tapping Valves for HDPE Pipes; Dimensions—1984
DIN 3544 PT 1	High Density Polyethylene (HDPE) Valves; Tapping Valves; Requirements and Test—1985
DIN 3840	Valve Bodies; Strength Calculation in Respect of Internal Pressure
DIN 3852 PT 1 (S)	Stud Ends and Tapped Holes with Metric Fine Pitch Thread, for Use with Compression Couplings, Valves and Screw Plugs; Dimensions—1992: Superseded in Part by DIN 3852 Part 11, May 1994 Edition
DIN 3852 PT 2 (S)	Stud Ends and Tapped Holes with Pipe Thread, for Use with Compression Couplings, Valves and Screw Plugs; Dimensions—1991: (Superseded in Part by DIN 3852 Part 11, May 1994 Edition)
DIN 3852 PT 3	Type F Stud Ends and Type W Tapped Holes with Metric Fine Pitch Thread, for Use with Compression Couplings, Valves and Screw Plugs, Sealed by O-Ring; Dimensions
DIN 3852 PT 11	Stud Ends and Tapped Holes for Use with Compression Couplings; Valves and Screw Plugs Type E Stud End Dimensions—1994; Supersedes Parts of DIN 3852 Part 1, February 1992 Edition, and DIN 3852 Part 2, November 1991 Edition
DIN 17480	Valve Materials; Technical Delivery Conditions (May)
DIN 19208	Flow Measurement; Mating Dimensions and Application of Shut-Off Valves for Differential Pressure Transducers and Differential Pressure Piping—1988

TABLE E10.D3 DIN Standards and Specifications for Valves *(Continued)*

Numbers	Title
DIN 19578 PT 1	Stop Valves for Site Drainage Systems; Anti-Flooding Valves for Faecal Sewage Systems; Requirements—1988
DIN 19578 PT 2	Stop Valves for Site Drainage Systems; Anti-Flooding Valves for Faecal Sewage Systems; Testing and Inspection—1988
DIN 30677 PT 1	External Corrosion Protection of Buried Valves; Normal Duty Coatings—1991
DIN 30677 PT 2	External Corrosion Protection of Buried Valves; Heavy-Duty Thermoset Plastics Coatings—1988
DIN 32509	Hand-Operated Shut-Off Valves for Welding, Cutting and Allied Processes; Designs, Safety Requirements, Testing—1985
DIN 42560	Transformers; Throttle-Valves NW 80; Dimensions; Tightness Testing—1971
DIN 45635 PT 50	Measurement of Noise Emitted by Machines; Airborne Noise Measurement, Enveloping Surface Method; Valves—1987
DIN 74279	Compressed-Air Braking Systems; Overflow Valves—1977
DIN 86500	Valves and Gate Valves with Screwed Connections; Survey of Types for Shipbuilding—1968
DIN 86501	Gunmetal Screwed-Bonnet Type Shut-Off Valves with Non-Soldered Cutting Ring–Type Pipe Unions—1973
DIN 86502	Gunmetal Screwed Bonnet Non-Return Valves with Non-Soldered Pipe Unions with Cutting Ring—1973
DIN 86511	Shut-Off Valves, Screwed-Bonnet Type of Gun Metal with 25 Deg. Taper Bushing Pipe Unions for Brazing
DIN 86512	Shut-Off Check Valves, Screwed-Bonnet Type of Gun Metal with 25 Deg. Taper Bushing Pipe Unions for Brazing
DIN 86528	Tab Washers for Screwed Bonnet Valves—1973
DIN 86545 (W)	Vent Valve; R ¼″; NP 16; up to 110 Deg. C
DIN 86551	Steel Screwed Bonnet Valves with 25 Deg. Taper-Bushing Type Pipe Unions
DIN 86552	Steel Screwed Bonnet Valves with Non-Soldered Cutting Ring-Type Pipe Unions—1973
DIN 86720	Bronze Wedge-Type Flat-Sided Gate Valves with Screwed Bonnet and Flanges; ND 16; NW 20 to 100—1968
DIN 87107	Gaskets for Non-Return Flaps in Accordance with DIN 87101
DIN 87901	Sniffle Valves for Pumps; Size R ⅜″ to R ¾″; ND 16 up to 100 Deg. C—1967

TABLE E10.D3 DIN Standards and Specifications for Valves *(Continued)*

Numbers	Title
DIN EN 488	Preinsulated Bonded Pipe Systems for Underground Hot Water Networks; Valve Assemblies for Steel Service Pipes with Polyurethane Thermal Insulation and Outer Polyethylene Casing
DIN EN 558-1	Face-to-Face and Centre-to-Face Dimensions of Metal Industrial Valves for Use in Flanged Pipe Systems; PN-Designated Valves—1995 (Supersedes DIN 3202 PT 1, September 1984 Edition)
DIN EN 558-2	Face-to-Face and Centre-to-Face Dimensions of Metal Industrial Valves for Use in Flanged Pipe Systems; Class-Designated Valves—1995
DIN EN 736-1	Valves; Terminology; Types of Valves
DIN EN 917	Plastic Piping Systems Thermoplastic Valves Test Methods for Resistance to Internal Pressure and Leaktightness
DIN EN 1092-2	Circular Flanges for Pipes, Valves, Fittings and Accessories, PN Designated Part 2: Cast Iron Flanges; Supersedes DIN 2532 02–1976; DIN 2533 02–1976; DIN 28604 01–1990; DIN 28605 01–1990; DIN 28606 01–1990; and 28607 01–1990 and also Supersedes Part of DIN 2500 08–1966
DIN EN 1680	Valves for Polyethylene (PE) Piping Systems; Test Method for Leaktightness Under and After Bending Applied to the Operating Mechanism
DIN EN 1704	Thermoplastics Valves; Test Method for the Integrity of a Valve After Temperature Cycling Under Bending
DIN 1705	Plastic Piping Systems; Thermoplastics Valves; Test Method for the Integrity of a Valve After an External Blow
DIN EN 28233	Thermoplastics Valves; Torque Test (ISO 8233: 1988)
DIN EN 28659	Thermoplastics Valves; Testing of Fatigue Strength (ISO 8659: 1989)

TABLE E10.J1 Japanese Standards and Specifications for Pipe, Tube, and Fittings

Numbers	Title
JIS A 5302	Concrete Pipes and Reinforced Concrete Pipes
JIS A 5303	Reinforced Spun and Centrifugal Reinforced Concrete Pipes
JIS A 5314	Mortar Lining for Ductile Iron Pipes (Errata–1995)
JIS A 5322	Reinforced Spun-Concrete Pipes with Socket
JIS A 5333	Core Type Prestressed Concrete Pipes
JIS A 5350	Fiberglass Reinforced Plastic Mortar Pipes (Errata–1995)
JIS A 5405	Asbestos Cement Pipes
JIS G 3429	Seamless Steel Tubes for High Pressure Gas Cylinder
JIS G 3439	Seamless Steel Oil Well Casing, Tubing and Drill Pipe
JIS G 3441	Alloy Steel Tubes for Machine Purposes
JIS G 3442	Galvanized Steel Pipes for Water Service
JIS G 3443	Coated Steel Pipes for Water Service; (Erratum)
JIS G 3444	Carbon Steel Tubes for General Structural Purposes: (Errata–March 1996)
JIS G 3445	Carbon Steel Tubes for Machine Structural Purposes
JIS G 3446	Stainless Steel Pipes for Machine and Structural Purposes
JIS G 3447	Stainless Steel Sanitary Pipes
JIS G 3448	Light Gauge Stainless Steel Pipes for Ordinary Piping
JIS G 3451	Fittings of Coated Steel Pipes for Water Service; Errata–1996
JIS G 3452	Carbon Steel Pipes for Ordinary Piping
JIS G 3454	Carbon Steel Pipes for Pressure Service
JIS G 3455	Carbon Steel Pipes for High Pressure Service
JIS G 3456	Carbon Steel Pipes for High Temperature Service
JIS G 3457	Arc Welded Carbon Steel Pipes
JIS G 3458	Alloy Steel Pipes
JIS G 3459	Stainless Steel Pipes (Errata–1995)
JIS G 3460	Steel Pipes for Low Temperature Service
JIS G 3465	Seamless Steel Tubes for Drilling
JIS G 3466	Carbon Steel Square Pipes for General Structural Purposes
JIS G 3468	Large Diameter Welded Stainless Steel Pipes
JIS G 3469	Polyethylene Coated Steel Pipes
JIS G 3471	Corrugated Steel Pipes and Sections
JIS G 3474	High Tensile Strength Steel Tubes for Tower Structural Purposes
JIS G 3491	Asphalt Protective Coatings for Steel Water Pipe R (1983)

TABLE E10.J1 Japanese Standards and Specifications for Pipe, Tube, and Fittings *(Continued)*

Numbers	Title
JIS G 3492	Coal-Tar Enamel Protective Coatings for Steel Water Pipe R (1983)
JIS G 4903	Seamless Nickel-Chromium-Iron Alloy Pipes
JIS G 5201	Centrifugally Cast Steel Pipes for Welded Structure
JIS G 5202	Centrifugally Cast Steel Pipes for High Temperature and High Pressure Service
JIS G 5525	Cast-Iron Soil Pipes and Fittings; Errata–1996
JIS G 5526	Ductile Iron Pipes
JIS G 5527	Ductile Iron Fittings
JIS G 5528	Epoxy-Powder Coating for Interior of Ductile Iron Pipes and Fittings
JIS H 0502	Method of Eddy Current Testing for Copper and Copper-Alloy Pipes and Tubes
JIS H 0515	Eddy Current Inspection of Titanium Pipes and Tubes
JIS H 0516	Ultrasonic Inspection of Titanium Pipes and Tubes
JIS H 3300	Copper and Copper Alloy Seamless Pipes and Tubes
JIS H 3320	Copper and Copper Alloy Welded Pipes and Tubes
JIS H 3401	Pipe Fittings of Copper and Copper Alloy
JIS H 4080	Aluminum and Aluminum Alloy Seamless Pipes and Tubes
JIS H 4090	Aluminum and Aluminum Alloy Welded Pipes and Tubes
JIS H 4202	Magnesium Alloy Seamless Pipes and Tubes
JIS H 4311	Lead and Lead Alloy Tubes for Common Industries
JIS H 4312	Polyethylene Lining Lead Pipes for Water Supply
JIS H 4552	Nickel and Nickel Alloy Seamless Pipe and Tubes
JIS H 4630	Titanium Pipes for Ordinary Piping
JIS H 4635	Titanium-Palladium Alloy Pipes for Ordinary Piping
JIS K 6739	Unplasticized Polyvinyl Chloride Pipe Fittings for Drain R (1980)
JIS K 6741	Unplasticized Polyvinyl Chloride (PVC) Pipes
JIS K 6742	Unplasticized Polyvinyl Chloride Pipes for Water Works; (Errata–April 1995)
JIS K 6743	Unplasticized Polyvinyl Chloride Pipe Fittings for Water Works
JIS K 6761	Polyethylene Pipes for General Purposes
JIS K 6762	Polyethylene Pipes for Water Works; (Errata–April 1995)
JIS K 6763	Polyethylene Pipe Fittings for Water Works
JIS K 6769	Crosslinked Polyethylene (XPE) Pipes
JIS K 6770	Crosslinked Polyethylene (XPE) Pipe Fusion Fittings

TABLE E10.J1 Japanese Standards and Specifications for Pipe, Tube, and Fittings *(Continued)*

Numbers	Title
JIS K 6774	Polyethylene Pipes for the Supply of Gaseous Fuels
JIS K 6775	Polyethylene Pipe-Fittings for the Supply of Gaseous Fuels
JIS K 6776	Chlorinated Polyvinyl Chloride (CPVC) Pipes for Hot and Cold Water Supply
JIS K 6777	Chlorinated Polyvinyl Chloride (CPVC) Pipe Fittings for Hot and Cold Water Supply
JIS K 6778	Polybutene (PB) Pipes
JIS K 6779	Polybutene (PB) Pipe-Fittings
JIS K 6897	Polytetrafluoroethylene Pipes
JIS R 1201	Clay Pipes
JIS R 1511	Conical Flanged Straight Pipes of Acid Proof Porcelains for Chemical Industry
JIS R 1512	Conical Flanged 90 Degree Bent Pipes of Acid Proof Porcelains for Chemical Industry
JIS R 1513	Conical Flanged 45 Degree Bent Pipes of Acid Proof Porcelains for Chemical Industry
JIS R 1514	Conical Flanged Tee Pipes of Acid Proof Porcelains for Chemical Industry
JIS R 1534	Metal Joint For Conical Flange Pipes of Acid Proof Porcelains for Chemical Industry
JIS R 3511	Ampoule Pipe
JIS S 2080	Exhaust Pipes for Burning Appliances
JIS S 3025	Supply and Exhaust Pipes for Oil Burning Appliances
JIS S 3028	Oil Discharge Copper Pipe for Oil Burning Appliances
JIS T 7101	Medical Gas Pipeline Systems
JIS T 9211	Pipes for Endoskeletal Type of Lower Limb Prostheses
JIS B 2301	Screwed Type Malleable Cast Iron Pipe Fittings
JIS B 2302	Screwed Type Steel Pipe Fittings
JIS B 2311	Steel Butt-Welding Pipe Fittings for Ordinary Use
JIS B 2312	Steel Butt-Welding Pipe Fittings
JIS B 2313	Steel Plate Butt-Welding Pipe Fittings
JIS B 2316	Steel Socket-Welding Pipe Fittings
JIS B 2321	Aluminium and Aluminium Alloy Butt-Welding Pipe Fittings
JIS B 2351	25 MPa (250 kgf/cm^2) Bite Type Tube Fittings for Hydraulic Use; (Errata–1994)
JIS B 2354	Crosslinked Polyethylene (XPE) Pipe Clamp Type Fittings
JIS B 6164	Compression Type Tube Fittings for Machine Tools Edition 1
JIS B 8381	Pneumatic System—Flexible Tubes—Tube Fittings

TABLE E10.J1 Japanese Standards and Specifications for Pipe, Tube, and Fittings *(Continued)*

Numbers	Title
JIS C 8380	Plastic Coated Steel Pipes for Cable—Ways
JIS D 3607	Automotive Diesel Engines–Steel Tubes for High-Pressure Fuel Injection Pipes
JIS E 4106	Railway Rolling Stock—Screwed Type Pipe Fittings
JIS E 4308	Railway Rolling Stock—Air Filters
JIS F 0014	Glossary of Terms of Shipbuilding (Hull Part—Piping)
JIS F 0301	Schemes Thermal Insulation of Piping for Small Ships
JIS F 0414	Internal Wirings and Pipings of Marine Engine Control Console
JIS F 0506	Application of Copper Pipes for Marine Use
JIS F 0507	Small Ships—Steel Pipes—Application
JIS F 2007	Mooring Pipes
JIS F 2030	Single Point Mooring Pipes
JIS F 3001	Hinged Caps of Sounding Pipes
JIS F 3002	Deck Pieces for Sounding Pipes R (1977)
JIS F 3016	Ships' Cast Iron Pipe Sleeve Type Expansion Joints
JIS F 3017	Ships' Cast Steel Pipe Sleeve Type Expansion Joints
JIS F 3993	Discharge Pipes for Dredger
JIS F 3994	Floaters of Discharge Pipes for Dredger
JIS F 3995	Rubber Sleeves for Dredger Discharge Pipes
JIS F 7008	Standard Specification of Thermal Insulation for Piping
JIS F 7101	Pipes of Ships' Machinery—Standard Velocity of Flow
JIS F 7102	Application for Gaskets and Packings to Piping System in Machinery Space
JIS F 7435	Brass 30 K Unions with Bite Joint(s) for Marine Use
JIS F 7436	Copper Tube 10 K Brazed Unions for Marine Use
JIS F 7437	Copper Tube 10 K Screwed Unions for Marine Use
JIS F 7438	Steel Pipe 10 K Welding Type Unions for Marine Use
JIS F 7439	Steel Pipe 10 K Screwed Unions for Marine Use
JIS F 7440	Copper Pipe 20 K Brazed Type Unions for Marine Use
JIS F 7441	Copper Pipe 20 K Screwed Unions for Marine Use
JIS F 7442	Steel Pipe 40 K Welded Unions for Marine Use
JIS F 7443	Steel Pipe 40 K Screwed Unions for Marine Use
JIS F 7444	Steel Pipe 100 K Welded Unions for Marine Use
JIS F 7445	Steel Pipe 100 K Screwed Unions for Marine use
JIS B 0151	Iron and Steel Pipe Fittings—Vocabulary
JIS B 2303	Screwed Drainage Fittings Edition 1
JIS B 8602	Pipe Flanges for Refrigerants; (Errata–1994)
JIS B 8607	Flare Type and Brazing Type Fittings for Refrigerants

TABLE E10.J2 Japanese Standards for Flanges, Bolts, Nuts, and Gaskets

Numbers	Title
JIS B 1189	Hexagon Bolts with Flange
JIS B 1190	Hexagon Nuts with Flange
JIS B 1451	Rigid Flanged Shaft Couplings
JIS B 1452	Flexible Flanged Shaft Couplings
JIS B 2201	Pressure Ratings for Ferrous Material Pipe Flanges Replaced by B 2238 and B 2239
JIS B 2202	Dimensions for Pipe Flange Facing
JIS B 2203	Tolerances for Pipe Flanges Replaced by B 2238 and B 2239
JIS B 2205	Basis for Calculation of Pipe Flanges
JIS B 2206	Basis for Calculation of Aluminium Alloy Pipe Flanges
JIS B 2207	Basis for Calculation of Aluminium Alloy Pipe Flanges with Full Face Gasket
JIS B 2210	Basic Dimensions of Ferrous Material Pipe Flanges replaced by B 2238 and B 2239
JIS B 2220	Steel Welding Pipe Flanges
JIS B 2240	Basic Dimensions of Copper Alloy Pipe Flanges
JIS B 2241	Basic Dimensions of Aluminium Alloy Pipe Flanges
JIS B 2990	Vacuum Flanges R (1974)
JIS B 2291	21 MPa Slip-On Welding Pipe Flanges for Hydraulic Use
JIS B 2292	Hydraulic Fluid Power—Positive Displacement Pumps and Motors—Dimensions and Identification Code for Mounting Flanges and Shaft Ends Part 2: Two- and Four-Hole Flanges and Shaft Ends—Metric Series (ISO 3019-2)
JIS B 2404	Spiral-Wound Gaskets for Pipe Flanges
JIS B 8273	Bolted Flange for Pressure Vessels
JIS B 8436	Circular Flanged Mechanical Interfaces of Industrial Robots
JIS B 8602	Pipe Flanges for Refrigerants: (Errata–1994)
JIS D 3106	Sleeve Type Flanged Half Bearings for Automobile Engines
JIS D 3631	Shapes and Dimensions of Flange-Mounted and Screw-Mounted Nozzle Holders Size S for Road Vehicles
JIS D 3701	Dimensions of Carburetor Flanges for Automobiles
JIS D 4304	Dimension of Flanges to be Fitted up Clutch Housing for Automobiles R (1983)
JIS F 7381	Bronze 5 K Flanged Cocks for Marine Use
JIS F 7801	Face-To-Face Dimensions of Marine T Pieces with Flanges
JIS F 7804	Marine Silver Brazing 5 K Pipe Flanges

TABLE E10.J2 Japanese Standards for Flanges, Bolts, Nuts, and Gaskets *(Continued)*

Numbers	Title
JIS F 7805	Basic Dimensions of Steel Flanges for Marine Exhaust Gas Pipe
JIS F 7806	Ships' 280 K and 350 K Socket Welding Pipe Flanges
JIS G 3223	High Tensile Strength Steel Forgings for Tower Flanges
JIS L 5105	Single Flange Rings
JIS L 6412	Warp Beams and Beam Flanges for Looms
JIS R 6259	Coated Abrasives—Flap Wheels with Incorporated Flanges or Separate Flanges—Designation and Dimensions
JIS Z 1604	Plugs and Flanges for Steel Drums
JIS B 2238	General Rules for Steel Pipe Flanges
JIS B 2239	General Rules for Cast Iron Flanges
JIS F 0602	Shipbuilding—Non-Asbestos Gaskets to Cargo Piping System—Application Standard
JIS F 7102	Application Standard of Gaskets and Packings to Piping System in Marine Machinery

TABLE E10.J3 Japanese Standards and Specifications for Valves

Numbers	Title
JIS B 0100	Glossary of Terms for Valves
JIS B 2001	Nominal Size and Bore of Valves
JIS B 2002	Face-To-Face and End-To-End Dimensions of Valves
JIS B 2003	General Rules for Inspection of Valves
JIS B 2004	General Rules for Marking on Valves
JIS B 2005	Test Procedures for Flow Coefficients of Valves
JIS B 2007	Industrial-Process Control Valves—Inspection and Routine Testing
JIS B 2011	Bronze Gate, Globe, Angle and Check Valves edition 1; Errata April—1997
JIS B 2031	Gray Cast Iron Valves
JIS B 2032	Wafer Type Rubber-Seated Butterfly Valves
JIS B 2051	Malleable Iron 10 K Screwed Valves
JIS B 2061	Faucets and Ball Taps
JIS B 2062	Sluice Valves for Water Works
JIS B 2063	Air Vent Valves for Water Works
JIS B 2064	Butterfly Valves for Water Works
JIS B 2071	Cast Steel Flanged Valves
JIS B 2191	Screwed Bronze Plug Cocks and Gland Cocks
JIS B 8210	Steam Boilers and Pressure Vessels—Spring Loaded Safety Valves
JIS B 8225	Safety Valves—Measuring Methods for Coefficient of Discharge
JIS B 8244	Valves for Dissolved Acetylene Cylinder
JIS B 8245	Valves for Liquefied Petroleum Gas Cylinder
JIS B 8246	High Pressure Gas Cylinders—Valves Edition 1
JIS B 8355	Subplate Type Solenoid Operated 4-Port Valves for Oil-Hydraulic Use R (1984)
JIS B 8357	Pressure Compensating Type Flow Control Valves for Oil-Hydraulic Use
JIS B 8372	Pressure Reducing Valves for Pneumatic Use
JIS B 8373	Pneumatic System—2-Port Solenoid Operated Valves
JIS B 8374	Pneumatic System—3-Port Solenoid Operated Valves
JIS B 8375	Pneumatic System—4-Port and 5-Port Solenoid Operated Valves; (Errata–1994)
JIS B 8376	Speed Control Valves for Pneumatic Use
JIS B 8410	Pressure Reducing Valves for Water
JIS B 8414	Relief Valves for Hot Water Appliances
JIS B 8471	Water Pipe Line—Solenoid Valves
JIS B 8472	Steam Pipe Line—Solenoid Valves

TABLE E10.J3 Japanese Standards and Specifications for Valves *(Continued)*

Numbers	Title
JIS B 8473	Fuel Oil Pipe Line—Solenoid Valves
JIS B 8605	Stop Valves for Refrigerants
JIS B 8619	Methods of Testing for Performance of Thermostatic Refrigerant Expansion Valves
JIS B 8651	Test Methods for Electro-Hydraulic Proportional Pressure Relief Valves
JIS B 8652	Test Methods for Electro-Hydraulic Proportional Pressure Reducing Valves and Electro-Hydraulic Proportional Pressure Reducing and Relieving Valves
JIS B 8653	Test Methods for Electro-Hydraulic Proportional Metering Valves
JIS B 8654	Test Methods for Electro-Hydraulic Proportional Series Flow Control Valves
JIS B 8655	Test Methods for Electro-Hydraulic Proportional Directional Series Flow Control Valves
JIS B 8656	Test Methods for Electro-Hydraulic Proportional Bypass Flow Control Valves
JIS B 8657	Test Methods for Electro-Hydraulic Proportional Directional Bypass Flow Control Valves
JIS B 8658	Rules of Electronic Amplifier for Electro-Hydraulic Control Valves
JIS B 8659	Test Methods for Electro-Hydraulic Servo Valves
JIS E 4102	Angle Cocks for Railway Rolling Stock
JIS E 4105	Three-Way Cocks for Railway Rolling Stock
JIS E 4115	Magnet Valves for Railway Rolling Stock
JIS E 4117	Leveling Valves for Railway Rolling Stock
JIS E 4306	Conductor's Valves for Railway Rolling Stock
JIS E 7701	Safety Valves for High Pressure Gas Tank Car Tanks
JIS F 0504	Application and Setting Pressure of Relief Valves for Ships' Machinery
JIS F 3018	Self Closing Parallel Cock Heads for Short Sounding Pipe
JIS F 3019	Self-Closing Gate Valve Heads for Short Sounding Pipe
JIS F 3024	Ships' Deck Stands for Controlling Valves
JIS F 3025	Remote Handling Fittings for Valves on Small Ships' Forepeak Bulkhead
JIS F 3026	Remote Handling Fittings for Valves in Small Ships' Cargo Oil Tank
JIS F 3056	Ships' Foot Valves R (1971)

TABLE E10.J3 Japanese Standards and Specifications for Valves *(Continued)*

Numbers	Title
JIS F 3057	Bronze Vertical Storm Valves
JIS F 3058	Cast Steel Vertical Storm Valves R (1977)
JIS F 3059	Bronze Screwdown Vertical Storm Valves
JIS F 3060	Cast Steel Screwdown Vertical Storm Valves
JIS F 3303	Flash Butt Welded Anchor Chain Cables
JIS F 5610	Forged Steel 20 K Reflex Type Water Gauges with Valves for Marine Boilers
JIS F 5611	Forged Steel 63 K Transparent Type Water Gauges with Valves for Marine Boilers
JIS F 7007	Abbreviation Used in Name Plate for Marine Valve
JIS F 7211	Marine 5 K Level Gauges with Valves
JIS F 7212	Marine Oil Level Gauges with Self Closing Valves
JIS F 7213	Marine 16 K Water Gauges with Valve
JIS F 7216	Marine Self Closing Valves for Oil Level Gauges
JIS F 7300	Application for Marine Valves and Cocks
JIS F 7301	Marine Bronze 5 K Globe Valves
JIS F 7302	Marine Bronze 5 K Angle Valves
JIS F 7303	Marine Bronze 16 K Globe Valves
JIS F 7304	Marine Bronze 16 K Angle Valves
JIS F 7305	Cast Iron 5 K Globe Valves for Marine Use
JIS F 7306	Cast Iron 5 K Angle Valves for Marine Use
JIS F 7307	Cast Iron 10 K Globe Valves for Marine Use
JIS F 7308	Cast Iron 10 K Angle Valves for Marine Use
JIS F 7309	Cast Iron 16 K Globe Valves for Marine Use
JIS F 7310	Cast Iron 16 K Angle Valves for Marine Use
JIS F 7311	Cast Steel 5 K Globe Valves for Marine Use
JIS F 7312	Cast Steel 5 K Angle Valves for Marine Use
JIS F 7313	Cast Steel 20 K Globe Valves for Marine Use
JIS F 7314	Cast Steel 20 K Angle Valves for Marine Use
JIS F 7315	Cast Steel 30 K Globe Valves for Marine Use
JIS F 7316	Cast Steel 30 K Angle Valves for Marine Use
JIS F 7317	Cast Steel 40 K Globe Valves for Marine Use
JIS F 7318	Cast Steel 40 K Angle Valves for Marine Use
JIS F 7319	Cast Steel 10 K Globe Valves for Marine Use
JIS F 7320	Cast Steel 10 K Angle Valves for Marine Use
JIS F 7321	Malleable Iron 5 K Globe Valves for Marine Use
JIS F 7322	Malleable Iron 5 K Angle Valves for Marine Use
JIS F 7323	Malleable Iron 16 K Globe Valves for Marine Use
JIS F 7324	Malleable Iron 16 K Angle Valves for Marine Use

TABLE E10.J3 Japanese Standards and Specifications for Valves *(Continued)*

Numbers	Title
JIS F 7329	Forged Steel 40 K Globe Valves for Marine Use
JIS F 7330	Forged Steel 40 K Angle Valves for Marine Use
JIS F 7333	Marine Cast Iron Hose Valves
JIS F 7334	Marine Bronze Hose Valves
JIS F 7336	Forged Steel Globe Air Valves for Marine Use
JIS F 7337	Forged Steel Angle Air Valves for Marine Use
JIS F 7340	Cast Steel Globe Air Valves for Marine Use
JIS F 7341	Forged Steel 100 K Pressure Gauge Valves for Marine Use
JIS F 7346	Bronze 5 K Globe Valves (Union Bonnet Type) for Marine Use
JIS F 7347	Bronze 5 K Angle Valves (Union Bonnet Type) for Marine Use
JIS F 7348	Bronze 16 K Globe Valves (Union Bonnet Type) for Marine Use
JIS F 7349	Bronze 16 K Angle Valves (Union Bonnet Type) for Marine Use
JIS F 7350	Marine Hull Cast Steel Angle Valves
JIS F 7351	Marine Bronze 5 K Screw-Down Check Globe Valves
JIS F 7352	Marine Bronze 5 K Screw-Down Check Angle Valves
JIS F 7353	Cast Iron 5 K Screw-Down Check Globe Valves for Marine Use
JIS F 7354	Cast Iron 5 K Screw-Down Check Angle Valves for Marine Use
JIS F 7356	Marine Bronze 5 K Lift Check Valves
JIS F 7358	Cast Iron 5 K Lift Check Globe Valves for Marine Use
JIS F 7359	Cast Iron 5 K Lift Check Angle Valves for Marine Use
JIS F 7360	Marine Hull Cast Steel Gate Valves
JIS F 7363	Cast Iron 5 K Gate Valves for Marine Use
JIS F 7364	Cast Iron 10 K Gate Valves for Marine Use
JIS F 7365	Marine Hull Cast Steel Globe Valves
JIS F 7366	Cast Steel 10 K Gate Valves for Marine Use
JIS F 7367	Bronze 5 K Rising Stem Type Gate Valves for Marine Use
JIS F 7368	Bronze 10 K Rising Stem Type Gate Valves for Marine Use
JIS F 7369	Cast Iron 16 K Gate Valves for Marine Use
JIS F 7371	Bronze 5 K Swing Check Valves for Marine Use
JIS F 7372	Cast Iron 5 K Swing Check Valves for Marine Use
JIS F 7373	Cast Iron 10 K Swing Check Valves for Marine Use

TABLE E10.J3 Japanese Standards and Specifications for Valves *(Continued)*

Numbers	Title
JIS F 7375	Cast Iron 10 K Screw-Down Check Globe Valves for Marine Use
JIS F 7376	Cast Iron 10 K Screw-Down Check Angle Valves for Marine Use
JIS F 7377	Cast Iron 16 K Screw-Down Check Globe Valves for Marine Use
JIS F 7378	Cast Iron 16 K Screw-Down Check Angle Valves for Marine Use
JIS F 7379	Brass 30 K Stop Valves with Bite Joint(s) for Marine Use
JIS F 7388	Bronze 20 K Globe Valves for Marine Use
JIS F 7389	Bronze 20 K Angle Valves for Marine Use
JIS F 7390	Marine Cocks with Locks
JIS F 7398	Marine Fuel Oil Tank Self-Closing Drain Valves
JIS F 7399	Marine Fuel Oil Tank Emergency Shut-off Valves
JIS F 7400	Ship Valves and Cocks—General Inspection Requirement
JIS F 7403	Marine Hull Bronze Globe Valves
JIS F 7404	Marine Hull Bronze Angle Valves
JIS F 7409	Marine Bronze 16 K Scew-Down Check Globe Valves
JIS F 7410	Marine Bronze 16 K Scew-Down Check Angle Valves
JIS F 7411	Bronze 5 K Screw-Down Check Globe Valves for Marine Use (Union Bonnet Type)
JIS F 7412	Bronze 5 K Screw-Down Check Angle Valves for Marine Use (Union Bonnet Type)
JIS F 7413	Bronze 16 K Screw-Down Check Globe Valves for Marine Use (Union Bonnet Type)
JIS F 7414	Bronze 16 K Screw-Down Check Angle Valves for Marine Use (Union Bonnet Type)
JIS F 7415	Bronze 5 K Lift Check Globe Valves for Marine Use (Union Bonnet Type)
JIS F 7416	Bronze 5 K Lift Check Angle Valves for Marine Use (Union Bonnet Type)
JIS F 7417	Bronze 16 K Lift Check Globe Valves for Marine Use (Union Bonnet Type)
JIS F 7418	Bronze 16 K Lift Check Angle Valves for Marine Use (Union Bonnet Type)
JIS F 7421	Forged Steel 20 K Globe Valves for Marine Use
JIS F 7422	Forged Steel 20 K Angle Valves for Marine Use
JIS F 7456	Remote Shut-off Devices for Marine Fuel Oil Tank Emergency Shut-off Valves

TABLE E10.J3 Japanese Standards and Specifications for Valves *(Continued)*

Numbers	Title
JIS F 7457	Pneumatically Operated Remote Shut-off Devices for Marine Fuel Oil Tank Emergency Shut-off Valves
JIS F 7471	Cast Steel 10 K Screw-Down Check Globe Valves for Marine Use
JIS F 7472	Cast Steel 10 K Screw-Down Check Angle Valves for Marine Use
JIS F 7473	Cast Steel 20 K Screw-Down Check Globe Valves for Marine Use
JIS F 7474	Cast Steel 20 K Screw-Down Check Angle Valves for Marine Use
JIS F 7475	Cast Steel Angle Air Valves for Marine Use
JIS F 7480	Rubber-Seat Butterfly Valves for Marine Use
JIS G 3561	Oil Tempered Wire for Valve Springs
JIS S 2120	Gas Valves
JIS S 2150	Manually Operated Gas Valves for Gas Appliances
JIS S 2151	Automatic Gas Valves for Gas Appliances
JIS S 3019	Oil Control Valves for Oil Burning Appliances
JIS S 7303	SCUBA Diving Goods—Cylinder Valves
JIS F 7425	Shipbuilding—Cast Iron Valves
JIS F 7426	Shipbuilding—Cast Steel Valves

TABLE E10.I1 International Standards and Specifications for Pipe, Tube, and Fittings

Numbers	Title
ISO 7-1	Pipe Threads Where Pressure-Tight Joints Are Made on the Threads–Part 1: Dimensions, Tolerances and Designation Third Edition
ISO 8	Pipe Threads Where Pressure-Tight Joints Are Made on the Threads–Part 2: Verification by Means of Limit Gauges First Edition
ISO 228-1	Pipe Threads Where Pressure-Tight Joints Are Not Made on the Threads–Part 1: Dimensions, Tolerances and Designation Third Edition
ISO 228-2	Pipe Threads Where Pressure-Tight Joints Are Not Made on the Threads–Part 2: Verification by Means of Limit Gauges Second Edition
ISO 392	Asbestos-Cement Pipe Fittings for Building and Sanitary Purposes First Edition
ISO 580	Injection-Moulded Unplasticized Poly(Vinyl Chloride) (PVC-U) Fittings—Oven Test—Test Method and Basic Specifications Second Edition
ISO 1179	Pipe Connections, Threaded to ISO 228/1, for Plain End Steel and Other Metal Tubes in Industrial Applications Second Edition
ISO 2035	Unplasticized Polyvinyl Chloride (PVC) Moulded Fittings for Elastic Sealing Ring Type Joints for Use Under Pressure—Pressure-Resistance Test First Edition
ISO 2044	Unplasticized Polyvinyl Chloride (PVC) Injection-Moulded Solvent-Welded Socket Fittings for Use with Pressure Pipe—Hydraulic Internal Pressure Test First Edition
ISO 2284	Hand Taps for Parallel and Taper Pipe Threads—General Dimensions and Marking Third Edition
ISO 2507-1	Thermoplastic Pipes and Fittings—Vicat Softening Temperature–Part 1: General Test Method First Edition; (Replaces ISO 2507)
ISO 2507-2	Thermoplastic Pipes and Fittings—Vicat Softening Temperature–Part 2: Test Conditoins for Unplasticized Poly(Vinyl Chloride) (PVC-U) or Chlorinated Poly(Vinyl Chloride) (PVC-C) Pipes and Fittings and for High Impact Resistance Poly(Vinyl Chloride) (PVC-HI) Pipes First Edition (Replaces ISO 2507)
ISO 2507-3	Thermoplastics Pipes and Fittings—Vicat Softening Temperature—Part 3: Test Conditions for Acrylonitrile/Butadiene/Styrene (ABS) and Acrylonitrile/Styrene/Acrylic Ester (ASA) Pipes and Fittings First Edition
ISO 2852	Stainless Steel Clamp Pipe Couplings for the Food Industry Second Edition

TABLE E10.I1 International Standards and Specifications for Pipe, Tube, and Fittings *(Continued)*

Numbers	Title
ISO 3183-1	Petroleum and Natural Gas Industries—Steel Pipe for Pipelines—Technical Delivery Conditions–Part 1: Pipes of Requirement Class A Second Edition
ISO 3183-2	Petroleum and Natural Gas Industries—Steel Pipe for Pipelines—Technical Delivery Conditions–Part 2: Pipes of Requirements Class B Second Edition
ISO TR 3313	Measurement of Pulsating Fluid Flow in a Pipe by Means of Orifice Plates, Nozzles or Venturi Tubes Second Edition
ISO 3458	Assembled Joints Between Fittings and Polyethylene (PE) Pressure Pipes—Test of Leakproofness Under Internal Pressure First Edition
ISO 3459	Polyethylene (PE) Pressure Pipes—Joints Assembled with Mechanical Fittings—Internal Under-Pressure Test Method and Requirement First Edition
ISO 3477	Polypropylene (PP) Pipes and Fittings—Density—Determination and Specification Second Edition
ISO 3503	Assembled Joints Between Fittings and Polyethylene (PE) Pressure Pipes—Test of Leakproofness Under Internal Pressure When Subjected to Bending First Edition
ISO 3514	Chlorinated Polyvinyl Chloride (CPVC) Pipes and Fittings—Specification and Determination of Density First Edition
ISO 3603	Fittings for Unplasticized Polyvinyl Chloride (PVC) Pressure Pipes with Elastic Sealing Ring Type Joints—Pressure Test for Leakproofness First Edition
ISO 3604	Fitting for Unplasticized Polyvinyl Chloride (PVC) Pressure Pipes with Elastic Sealing Ring Type Joints—Pressure Test for Leakproofness Under Conditions of External Hydraulic Pressure First Edition
ISO 4059	Polyethylene (PE) Pipes—Pressure Drop in Mechanical Pipe-Jointing Systems—Method of Test and Requirements First Edition
ISO 4230	Hand- and Machine-Operated Circular Screwing Dies for Taper Pipe Threads—R Series Second Edition
ISO 4231	Hand- and Machine-Operated Circular Screwing Dies for Parallel Pipe Threads—G Series Second Edition
ISO 4434	Unplasticized Polyvinyl Chloride (PVC) Adaptor Fittings for Pipes Under Pressure—Laying Length and Size of Threads—Metric Series First Edition
ISO 4439	Unplasticized Polyvinyl Chloride (PVC) Pipes and Fittings—Determination and Specification of Density First Edition

TABLE E10.I1 International Standards and Specifications for Pipe, Tube, and Fittings *(Continued)*

Numbers	Title
ISO 4451	Polyethylene (PE) Pipes and Fittings—Determination of Reference Density of Uncoloured and Black Polyethylenes First Edition; (Erratum–1980)
ISO 4488	Asbestos—Cement Pipes and Joints for Thrust-Boring and Pipe Jacking First Edition
ISO 5168	Measurement of Fluid Flow—Estimation of Uncertainty of a Flow-Rate Measurement First Edition
ISO 5969	Ground Thread Taps for Pipe Threads G Series and Rp Series—Tolerances on the Threaded Portion First Edition; (Corrigendum 1–1991)
ISO 6605	Hydraulic Fluid Power—Hose Assemblies—Method of Test First Edition
ISO 6964	Polyolefin Pipes and Fittings—Determination of Carbon Black Content by Calcination and Pyrolysis—Test Method and Basic Specification First Edition
ISO 7268	Pipe Components—Definition of Nominal Pressure First Edition: (Amendment 1–1984)
ISO 7278-2	Liquid Hydrocarbons—Dynamic Measurement—Proving Systems for Volumetric Meters–Part 2: Pipe Provers First Edition; (CEN EN ISO 7278-2: 1995)
ISO 7387-1	Adhesives with Solvents for Assembly of PVC-U Pipe Elements—Characterization–Part 1: Basic Test Methods First Edition
ISO 7608	Shipbuilding—Inland Navigation—Couplings for Disposal of Oily Mixture and Sewage Water First Edition
ISO 8142	Thermal Insulation—Bonded Preformed Man-Made Mineral Fibre Pipe Sections—Specification First Edition
ISO 8361-1	Thermoplastics Pipes and Fittings—Water Absorption–Part 1: General Test Method First Edition
ISO 8361-2	Thermoplastics Pipes and Fittings—Water Absorption–Part 2: Test Conditions for Unplasticized Poly(Vinyl Chloride) (PVC-U) Pipes and Fittings First Edition
ISO 8361-3	Thermoplastics Pipes and Fittings—Water Absorption–Part 3: Test Conditions for Acrylonitrile/Butadiene/Styrene (ABS) Pipes and Fittings First Edition
ISO 8497	Thermal Insulation—Determination of Steady-State Thermal Transmision Properties of Thermal Insulation for Circular Pipes First Edition CEN EN ISO 8497: 1996

TABLE E10.I1 International Standards and Specifications for Pipe, Tube, and Fittings *(Continued)*

Numbers	Title
ISO TR 9080	Thermoplastics Pipes for the Transport of Fluids—Methods of Extrapolation of Hydrostatic Stress Rupture Data to Determine the Long-Term Hydrostatic Strength of Thermoplastics Pipe Materials First Edition
ISO 9261	Agricultural Irrigation Equipment—Emitting-Pipe Systems—Specification and Test Methods First Edition
ISO 9356	Polyolefin Pipe Assemblies with or Without Jointed Fittings—Resistance to Internal Pressure—Test Method First Edition
ISO 9691	Rubber—Recommendations for the Workmanship of Pipe Joint Rings—Description and Classification of Imperfections First Edition
ISO TR 9824-1	Measurement of Free Surface Flow in Closed Conduits–Part 1: Methods First Edition
ISO TR 9824-2	Measurement of Free Surface Flow in Closed Conduits–Part 2: Equipment First Edition
ISO 9853	Injection-Moulded Unplasticized Poly(Vinyl Chloride) (PVC-U) Fittings for Pressure Pipe Systems—Crushing Test First Edition
ISO 10400	Petroleum and Natural Gas Industries—Formulae and Calculation for Casing, Tubing, Drill Pipe and Line Pipe Properties First Edition
ISO 10420	Petroleum and Natural Gas Industries—Flexible Pipe Systems for Subsea and Marine Riser Applications First Edition
ISO 10422	Petroleum and Natural Gas Industries—Threading, Gauging, and Inspection of Casing, Tubing and Line Pipe Threads—Specification First Edition
ISO 11413	Plastics Pipes and Fittings—Preparation of Test Piece Assemblies Between a Polyethylene (PE) Pipe and an Electrofusion Fitting First Edition
ISO 11414	Plastics Pipes and Fittings—Preparation of Polyethylene (PE) Pipe/Pipe or Pipe/Fitting Test Piece Assemblies by Butt Fusion First Edition
ISO 11420	Method for the Assessment of the Degree of Carbon Black Dispersion in Polyolefin Pipes, Fittings and Compounds First Edition
ISO TR 11647	Fusion Compatibility of Polyethylene (PE) Pipes and Fittings First Edition
ISO 11961	Petroleum and Natural Gas Industries—Steel Pipes for Use as Drill Pipe—Specification First Edition

TABLE E10.I1 International Standards and Specifications for Pipe, Tube, and Fittings *(Continued)*

Numbers	Title
ISO 13783	Plastics Piping Systems—Unplasticized Poly(Vinyl Chloride) (PVC-U) End-Load-Bearing Double-Socket Joints—Test Method for Leaktightness and Strength While Subjected to Bending and Internal Pressure First Edition
ISO 540	Solid Mineral Fuels—Determination of Fusibility of Ash—High-Temperature Tube Method Third Edition
ISO 1635-2	Seamless Wrought Copper and Copper Alloy Tube–Part 2: Technical Conditions of Delivery for Condenser and Heat-Exchanger Tubes First Edition
ISO 1651	Tube Drawing Mandrels First Edition; Amendment 1–1982
ISO 1684	Wire, Bar and Tube Drawing Dies—Specifications First Edition; Amendment 2–1982
ISO 2718	Standard Layout for a Method of Chemical Analysis by Gas Chromatography First Edition
ISO 2804	Wire, Bar or Tube Drawing Dies—As-Sintered Pellets of Hardmetal (Carbide)—Dimensions Second Edition
ISO 4397	Fluid Power Systems and Components—Connectors and Associated Components—Nominal Outside Diameters of Tubes and Nominal Inside Diameters of Hoses Second Edition
ISO 5361-5	Tracheal Tubes–Part 5: Requirements and Methods of Test for Cuffs and Tubes First Edition; (CSA CAN/ CSA-Z5361–94)
ISO 5730	Stationary Shell Boilers of Welded Construction (Other Than Water-Tube Boilers) First Edition
ISO 6207	Seamless Nickel and Nickel Alloy Tube First Edition
ISO 7228	Tracheal Tube Connectors Third Edition; (CSA CAN/ CSA-Z7228–94)
ISO 8434-1	Metallic Tube Connections for Fluid Power and General Use–Part 1: 24 Degree Compression Fittings First Edition; (Replaces ISO 8434)
ISO 8434-2	Metallic Tube Connections for Fluid Power and General Use–Part 2: 37 Degree Flared Fittings First Edition; (Replaces ISO 8434)
ISO 8434-3	Metallic Tube Connections for Fluid Power and General Use–Part 3: O-Ring Face Seal Fittings First Edition
ISO 8434-4	Metallic Tube Connections for Fluid Power and General Use–Part 4: 24 Degree Cone Connectors with O-Ring Weld-On Nipples First Edition
ISO 8434-5	Metallic Tube Connections for Fluid Power and General Use–Part 5: Test Methods for Threaded Hydraulic Fluid Power Connections First Edition

TABLE E10.I1 International Standards and Specifications for Pipe, Tube, and Fittings *(Continued)*

Numbers	Title
ISO 8491	Metallic Materials—Tube (In Full Section)—Bend Test First Edition
ISO 8492	Metallic Materials—Tube—Flattening Test First Edition
ISO 8493	Metallic Materials—Tube—Drift Expanding Test First Edition
ISO 8494	Metallic Materials—Tube—Flanging Test First Edition
ISO 8495	Metallic Materials—Tube—Ring Expanding Test First Edition
ISO 8496	Metallic Materials—Tube—Ring Tensile Test First Edition
ISO 8762	Workplace Air—Determination of Vinyl Chloride—Charcoal Tube/Gas Chromatographic Method First Edition
ISO 9095	Steel Tubes—Continuous Character Marking and Colour Coding for Material Identification First Edition
ISO 9455-12	Soft Soldering Fluxes—Test Methods–Part 12: Steel Tube Corrosion Test First Edition (CENELEC EN ISO 9455-12–1994)
ISO 9486	Workplace Air—Determination of Vaporous Chlorinated Hydrocarbons—Charcoal Tube/Solvent Desorption/Gas Chromatographic Method First Edition
ISO 9487	Workplace Air—Determination of Vaporous Aromatic Hydrocarbons—Charcoal Tube/Solvent Desorption/Gas Chromatographic Method First Edition
ISO 11496	Seamless and Welded Steel Tubes for Pressure Purposes—Ultrasonic Testing of Tube Ends for the Detection of Laminar Imperfections First Edition
ISO 13664	Seamless and Welded Steel Tubes for Pressure Purposes—Magnetic Particle Inspection of the Tube Ends for the Detection of Laminar Imperfections First Edition
ISO 13665	Seamless and Welded Steel Tubes for Pressure Purposes—Magnetic Particle Inspection of the Tube Body for the Detection of Surface Imperfections First Edition
ISO 49	Malleable Cast Iron Fittings Threaded to ISO 7-1 Second Edition; Corrigendum 1 02/15/1997
ISO 264	Unplasticized Polyvinyl Chloride (PVC) Fittings With Plain Sockets for Pipes Under Pressure—Laying Length—Metric Series First Edition; Addendum 1–1982

TABLE E10.I1 International Standards and Specifications for Pipe, Tube, and Fittings *(Continued)*

Numbers	Title
ISO 265-1	Pipes and Fittings of Plastics Materials—Fittings for Domestic and Industrial Waste Pipes—Basic Dimensions: Metric Series–Part 1: Unplasticized Poly(Vinyl Chloride) (PVC-U) First Edition
ISO 727	Fittings of Unplasticized Polyvinyl Chloride (PVC-U), Chlorinated Polyvinyl Chloride (PVC-C) or Acrylonitrile/Butadiene/Styrene (ABS) with Plain Sockets for Pipes Under Pressure—Dimensions of Sockets—Metric Series Fourth Edition
ISO 881	Asbestos-Cement Pipes, Joints and Fittings for Sewerage and Drainage First Edition
ISO 2016	Capillary Solder Fittings for Copper Tubes—Assembly Dimensions and Tests First Edition
ISO 2048	Double-Socket Fittings for Unplasticized Poly(Vinyl Chloride) (PVC-U) Pressure Pipes with Elastic Sealing Ring Type Joints—Minimum Depths of Engagement Second Edition
ISO 2531	Ductile Iron Pipes, Fittings and Accessories for Pressure Pipelines Fourth Edition
ISO 2851	Metal Pipes and Fittings—Stainless Steel Bends and Tees for the Food Industry First Edition
ISO 3253	Hose Connections for Equipment for Welding, Cutting and Related Processes First Edition
ISO 3419	Non-Alloy and Alloy Steel Butt-Welding Fittings Second Edition; (Erratum–1982)
ISO 3501	Assembled Joints Between Fittings and Polyethylene (PE) Pressure Pipes—Test of Resistance to Pull out First Edition
ISO 3545-1	Steel Tubes and Fittings—Symbols for Use in Specifications–Part 1: Tubes and Tubular Accessories with Circular Cross-Section First Edition
ISO 3545-2	Steel Tubes and Fittings—Symbols for Use in Specifications–Part 2: Square and Rectangular Hollow Sections First Edition
ISO 3545-3	Steel Tubes and Fittings—Symbols for Use in Specifications–Part 3: Tubular Fittings with Circular Cross-Section First Edition
ISO 3586	Glass Plant, Pipeline and Fittings—General Rules for Testing, Handling and Use First Edition
ISO 3587	Glass Plant, Pipeline and Fittings—Pipeline and Fittings of Nominal Bore 15 to 150 mm—Compatibility and Interchangeability First Edition; (Erratum–1979)
ISO 3633	Unplasticized Poly(Vinyl Chloride) (PVC-U) Pipes and Fittings for Soil and Waste Discharge (Low and High Temperature) Systems Inside Buildings—Specifications First Edition

TABLE E10.I1 International Standards and Specifications for Pipe, Tube, and Fittings *(Continued)*

Numbers	Title
ISO 4056	Polyethylene (PE) Pipes and Fittings—Designation of Polyethylene, Based on Nominal Density and Melt Flow Index First Edition
ISO 4132	Unplasticized Polyvinyl Chloride (PVC) and Metal Adaptor Fittings for Pipes Under Pressure—Laying Lengths and Size of Threads—Metric Series First Edition
ISO 4144	Stainless Steel Fittings Threaded to ISO 7/1 First Edition
ISO 4145	Non-Alloy Steel Fittings Threaded to ISO 7/1 Second Edition
ISO 4422-1	Pipes and Fittings Made of Unplasticized Poly(Vinyl Chloride) (PVC-U) for Water Supply—Specifications–Part 1: General First Edition; Supersedes ISO 4422: 1990
ISO 4422-2	Pipes and Fittings Made of Unplasticized Poly(Vinyl Chloride) (PVC-U) for Water Supply—Specifications–Part 2: Pipes (With or Without Integral Sockets) First Edition
ISO 4422-3	Pipes and Fittings Made of Unplasticized Poly(Vinyl Chloride) (PVC-U) for Water Supply—Specifications–Part 3: Fittings and Joints First Edition; Supersedes ISO 4422: 1990
ISO 4422-5	Pipes and Fittings Made of Unplasticized Poly(Vinyl Chloride) (PVC-U) for Water Supply—Specifications–Part 5: Fitness for Purpose of the System First Edition; Supersedes ISO 4422: 1990
ISO 4435	Unplasticized Poly(Vinyl Chloride) (PVC-U) Pipes and Fittings for Buried Drainage and Sewerage Systems—Specifications First Edition
ISO 4440-1	Thermoplastics Pipes and Fittings—Determination of Melt Mass-Flow Rate–Part 1: Test Method First Edition
ISO 4440-2	Thermoplastics Pipes and Fittings—Determination of Melt Mass-Flow Rate–Part 2: Test Conditions First Edition
ISO 4486	Asbestos-Cement Ventilation Ducts and Fittings—Dimensions and Characteristics First Edition
ISO 4704	Glass Plant, Pipeline and Fittings—Glass Plant Components First Edition; (Erratum–1979)
ISO 5251	Stainless Steel Butt-Welding Fittings First Edition
ISO 5256	Steel Pipes and Fittings for Buried or Submerged Pipelines—External and Internal Coating by Bitumen or Coal Tar Derived Materials First Edition
ISO 6447	Rubber Seals—Joint Rings Used for Gas Supply Pipes and Fittings—Specification for Material First Edition

TABLE E10.I1 International Standards and Specifications for Pipe, Tube, and Fittings *(Continued)*

Numbers	Title
ISO 6448	Rubber Seals—Joint Rings Used for Petroleum Product Supply Pipes and Fittings—Specification for Material First Edition
ISO 6455	Unplasticized Polyvinyl Chloride (PVC) Fittings with Elastic Sealing Ring Type Joints for Pipes Under Pressure—Dimensions of Laying Lengths—Metric Series First Edition
ISO 6594	Cast Iron Drainage Pipes and Fittings—Spigot Series First Edition; (Corrected and Reprinted–1985)
ISO 6761	Steel Tubes—Preparation of Ends of Tubes and Fittings for Welding First Edition
ISO TR 7074	Performance Requirements for Plastic Pipes and Fittings for Use in Underground Drainage and Sewage First Edition
ISO 7245	Pipes and Fittings of Acrylonitrile-Butadiene-Styrene (ABS)—General Specification for Moulding and Extrusion Materials First Edition
ISO 7246	Pipes and Fittings of Acrylonitrile/Styrene/Acrylester (ASA)—General Specification for Moulding and Extrusion Materials First Edition
ISO 7279	Polypropylene (PP) Fittings for Pipes Under Pressure—Sockets for Fusion Using Heated Tools—Metric Series—Dimensions of Sockets First Edition
ISO 7370	Glass Fibre Reinforced Thermosetting Plastics (GRP) Pipes and Fittings—Nominal Diameters, Specified Diameters and Standard Lengths First Edition
ISO 7671	Polypropylene (PP) Pipes and Fittings (Jointed by Means of Elastomeric Sealing Rings) for Soil and Waste Discharge (Low and High Temperature) Systems Inside Buildings—Specifications First Edition
ISO 7675	Chlorinated Poly(Vinyl Chloride) (PVC-C) Pipes and Fittings for Soil and Waste Discharge (Low and High Temperature) Systems Inside Buildings—Specifications First Edition
ISO 7682	Acrylonitrile/Butadiene/Styrene (ABS) Pipes and Fittings for Soil and Waste Discharge (Low and High Temperature) Systems Inside Buildings—Specifications First Edition
ISO 7686	Plastics Pipes and Fittings—Opacity—Test Method First Edition
ISO 8283-1	Plastics Pipes and Fittings—Dimensions of Sockets and Spigots for Discharge Systems Inside Buildings–Part 1: Unplasticized Poly(Vinyl Chloride) (PVC-U) and Chlorinated Poly (Vinyl Chloride) (PVC-C) First Edition

TABLE E10.I1 International Standards and Specifications for Pipe, Tube, and Fittings *(Continued)*

Numbers	Title
ISO 8283-2	Plastics Pipes and Fittings—Dimensions of Sockets and Spigots for Discharge Systems Inside Buildings–Part 2: Polyethylene (PE) First Edition
ISO 8283-3	Plastics Pipes and Fittings—Dimensions of Sockets and Spigots for Discharge Systems Inside Buildings–Part 3: Polypropylene (PP) First Edition
ISO 8283-4	Plastics Pipes and Fittings—Dimensions of Sockets and Spigots for Discharge Systems Inside Buildings–Part 4: Acrylonitrile/Butadiene/Styrene (ABS) First Edition
ISO 8434-1	Metallic Tube Connections for Fluid Power and General Use–Part 1: 24 Degrees Compression Fittings First Edition; (Replaces ISO 8434)
ISO 8434-2	Metallic Tube Connections for Fluid Power and General Use–Part 2: 37 Degree Flared Fittings First Edition; (Replaces ISO 8434)
ISO 8434-3	Metallic Tube Connections for Fluid Power and General Use–Part 3: O-Ring Face Seal Fittings First Edition
ISO 8572	Pipes and Fittings Made of Glass-Reinforced Thermosetting Plastics (GRP)—Definitions of Terms Relating to Pressure, Including Relationships Between Them, and Terms for Installation and Jointing First Edition
ISO 8770	High-Density Polyethylene (PE-HD) Pipes and Fittings for Soil and Waste Discharge (Low and High Temperature) Systems Inside Buildings—Specifications First Edition
ISO 8772	High-Density Polyethylene (PE-HD) Pipes and Fittings for Buried Drainage and Sewerage Systems—Specifications First Edition
ISO 8773	Polypropylene (PP) Pipes and Fittings for Buried Drainage and Sewerage Systems—Specifications First Edition
ISO 8796	Polyethylene (PE) 25 Pipes for Irrigation Laterals—Susceptibility to Environmental Stress-Cracking Induced by Insert-Type Fittings—Test Method and Specification First Edition
ISO 9095	Steel Tubes—Continuous Character Marking and Colour Coding for Material Identification First Edition
ISO 9623	PE/Metal and PP/Metal Adaptor Fittings for Pipes for Fluids Under Pressure—Design Lengths and Size of Threads—Metric Series First Edition
ISO 9625	Mechanical Joint Fittings for Use with Polyethylene Pressure Pipes for Irrigation Purposes First Edition
ISO 9803	Vacuum Technology—Pipeline Fittings—Mounting Dimensions First Edition

TABLE E10.I1 International Standards and Specifications for Pipe, Tube, and Fittings *(Continued)*

Numbers	Title
ISO 9808	Solar Water Heaters—Elastomeric Materials for Absorbers, Connecting Pipes and Fittings—Method of Assessment First Edition
ISO 10147	Pipes and Fittings Made of Crosslinked Polyethylene (PE-X)—Estimation of the Degree of Crosslinking by Determination of the Gel Content First Edition
ISO TR 10358	Plastics Pipes and Fittings—Combined Chemical-Resistance Classification Table First Edition; (Cancels and Replaces TR 6285, TR 7471, TR 7472, TR 7473, TR 7474)
ISO 10508	Thermoplastics Pipes and Fittings for Hot and Cold Water Systems First Edition
ISO 10806	Pipework–Non-Alloyed and Stainless Steel Fittings for Corrugated Flexible Metallic Hoses First Edition
ISO TR 10837	Determination of the Thermal Stability of Polyethylene (PE) for Use in Gas Pipes and Fittings First Edition
ISO 10928	Plastics Piping Systems—Glass-Reinforced Thermosetting Plastics (GRP) Pipes and Fittings—Methods for Regression Analysis and Their Use First Edition
ISO 10931-3	Plastics Piping Systems for Industrial Applications—Poly(Vinylidene Fluoride) (PVDF)–Part 3: Fittings First Edition
ISO TR 11295	Techniques for Rehabilitation of Pipeline Systems by the Use of Plastics Pipes and Fittings First Edition
ISO 12162	Thermoplastics Materials for Pipes and Fittings for Pressure Applications—Classification and Designation—Overall Service (Design) Coefficient First Edition (CEN EN ISO 12162: 1995)
ISO 13761	Plastics Pipes and Fittings—Pressure Reduction Factors for Polyethylene Pipeline Systems for Use at Temperatures Above 20 Degrees C First Edition

TABLE E10.I2 International Standards and Specifications for Flanges, Bolts, Nuts, and Gaskets

Numbers	Title
ISO 666	Machine Tools—Mounting of Plain Grinding Wheels by Means of Hub Flanges Second Edition
ISO 1609	Vacuum Technology—Flange Dimensions First Edition
ISO 2536	Unplasticized Polyvinyl Chloride (PVC) Pressure Pipes and Fittings, Metric Series—Dimensions of Flanges First Edition
ISO 3019-1	Hydraulic Fluid Power—Positive Displacement Pumps and Motors—Dimensions and Identification Code for Mounting Flanges and Shaft Ends–Part 1: Inch Series Shown in Metric Units First Edition; (Erratum–1975)
ISO 3019-2	Hydraulic Fluid Power—Positive Displacement Pumps and Motors—Dimensions and Identification Code for Mounting Flanges and Shaft Ends–Part 2: Two- and Four-Hole Flanges and Shaft Ends—Metric Series Second Edition
ISO 3019-3	Hydraulic Fluid Power—Positive Displacement Pumps and Motors—Dimensions and Identification Code for Mounting Flanges and Shaft Ends–Part 3: Polygonal Flanges (Including Circular Flanges) Second Edition
ISO 3663	Polyethylene (PE) Pressure Pipe and Fittings, Metric Series—Dimensions of Flanges First Edition
ISO 3669	Vacuum Technology—Bakable Flanges—Dimensions First Edition
ISO 5211-1	Part-Turn Valve Actuator Attachment–Part 1: Flange Dimensions First Edition
ISO 5211-2	Part-Turn Valve Actuator Attachment–Part 2: Flange and Coupling Performance Characteristics First Edition
ISO 5429	Coated Abrasives—Flap Wheels with Incorporated Flanges or Separate Flanges—Designation and Dimensions First Edition
ISO 6580	General Purpose Industrial Fans—Circular Flanges—Dimensions First Edition
ISO 7005-1	Metallic Flanges–Part 1: Steel Flanges First Edition; (AS/NZS 4331.1: 1995)
ISO 7005-2	Metallic Flanges–Part 2: Cast Iron Flanges First Edition; (Supersedes ISO 2084, ISO 2229 and ISO 2441) (AS/NZS 4331.2: 1995)
ISO 7005-3	Metallic Flanges–Part 3: Copper Alloy and Composite Flanges First Edition; (Supersedes ISO 2084, ISO 2229 and ISO 2441) (AS/NZS 4331.3: 1995)
ISO 7299	Diesel Engines—End-Mounting Flanges for Fuel Injection Pumps Second Edition
ISO 9624	Thermoplastics Pipes for Fluids Under Pressure—Mating Dimensions of Flange Adapters and Loose Backing Flanges First Edition

TABLE E10.I2 International Standards and Specifications for Flanges, Bolts, Nuts, and Gaskets *(Continued)*

Numbers	Title
ISO 12129-2	Plain Bearing–Part 2: Tolerances on Form and Position and Surface Roughness for Shafts, Flanges and Thrust Collars First Edition
ISO 4708	Cork-Composition Cork Gasket Material—Test Methods First Edition
ISO 4709	Cork-Composition Cork Gasket Material—Specifications First Edition
ISO 5892	Rubber Building Gaskets—Materials for Preformed Solid Vulcanized Structural Gaskets—Specification First Edition
ISO 7483	Dimensions of Gaskets for Use with Flanges to ISO 7005 First Edition; (Corrigendum 1–1995)
ISO 225	Fasteners-Bolts, Screws, Studs and Nuts—Symbols and Designations of Dimensions Second Edition
ISO 262	ISO General Purpose Metric Screw Threads—Selected Sizes for Screws, Bolts and Nuts
ISO 263	ISO Inch Screw Threads-General Plan and Selection for Screws, Bolts and Nuts-Diameter Range 0.06 to 6 in First Edition
ISO 273	Fasteners—Clearance Holes for Bolts and Screws First Edition; Amendment Slip–1979; NZS/ISO 273: 1979
ISO 885	General Purpose Bolts and Screws—Metric Series—Radii Under the Head First Edition
ISO 887	Plain Washers for Metric Bolts, Screws and Nuts—General Plan First Edition
ISO 888	Bolts, Screws and Studs—Nominal Lengths, and Thread Lengths for General Purpose Bolts First Edition
ISO 898-1	Mechanical Properties of Fasteners–Part 1: Bolts, Screws and Studs Second Edition; AS/NZS 4291.1: 1995
ISO 898-7	Mechanical Properties of Fasteners–Part 7: Torsional Test and Minimum Torques for Bolts and Screws with Nominal Diameters 1 mm to 10 mm First Edition; CEN EN 20898-7: 1995
ISO 965-2	ISO General Purpose Metric Screw Threads—Tolerances Part 2: Limits of Sizes for General Purpose Bolt and Nut Threads—Medium Quality Second Edition
ISO R1501	ISO Miniature Screw Threads First Edition
ISO 1891	Bolts, Screws, Nuts and Accessories—Terminology and Nomenclature First Edition; Amendment Slip–1980
ISO 4014	Hexagon Head Bolts—Product Grades A and B Second Edition; (AS/NZS 1110: 1995)

TABLE E10.I2 International Standards and Specifications for Flanges, Bolts, Nuts, and Gaskets *(Continued)*

Numbers	Title
ISO 4015	Hexagon Head Bolts—Product Grade B—Reduced Shank (Shank Diameter is Approximately Equal to Pitch Diameter) First Edition
ISO 4016	Hexagon Head Bolts—Product Grade C Second Edition
ISO 4162	Hexagon Flange Bolts—Small Series First Edition
ISO 4759-1	Tolerances for Fasteners–Part 1: Bolts, Screws and Nuts with Thread Diameters Greater Than or Equal to 1,6 and Less Than or Equal to 150 mm and Product Grades A, B and C First Edition
ISO 4759-2	Tolerances for Fasteners–Part 2: Bolts, Screws and Nuts with Thread Diameters from 1 up to 3 mm and Product Grade F, for Fine Mechanics First Edition; (Amendment Slip–1980)
ISO 4759-3	Tolerances for Fasteners–Part 3: Plain Washers for Bolts, Screws and Nuts with Nominal Thread Diameters from 1 mm up to and Including 150 mm–Product Grades A and C Second Edition
ISO 6157-1	Fasteners—Surface Discontinuities–Part 1: Bolts, Screws and Studs for General Requirements First Edition
ISO 6157-3	Fasteners—Surface Discontinuities–Part 3: Bolts, Screws and Studs for Special Requirements First Edition
ISO 7378	Fasteners—Bolts, Screws and Studs—Split Pin Holes and Wire Holes First Edition
ISO 7411	Hexagon Bolts for High-Strength Structural Bolting with Large Width Across Flats (Thread Lengths According to ISO 888)—Product Grade C—Property Classes 8.8 and 10.9 First Edition
ISO 7412	Hexagon Bolts for High-Strength Structural Bolting with Large Width Across Flats (Short Thread Length)—Product Grade C—Property Classes 8.8 and 10.9 First Edition
ISO 8677	Cup Head Square Neck Bolts with Large Head—Product Grade C First Edition
ISO 8678	Cup Head Square Neck Bolts with Small Head and Short Neck—Product Grade B First Edition
ISO 8765	Hexagon Head Bolts with Metric Fine Pitch Thread—Product Grades A and B First Edition
ISO 8839	Mechanical Properties of Fasteners—Bolts, Screws, Studs and Nuts Made of Non-Ferrous Metals First Edition
ISO 8992	Fasteners—General Requirements for Bolts, Screws, Studs and Nuts First Edition

TABLE E10.I3 International Standards and Specifications for Valves

Numbers	Title
ISO 683-15	Heat-Treatable Steels, Alloy Steels and Free-Cutting Steels–Part 15: Valve Steels for Internal Combustion Engines Second Edition
ISO 4126-1	Safety Valves–Part 1: General Requirements First Edition
ISO 4401	Hydraulic Fluid Power—Four-Port Directional Control Valves—Mounting Surfaces Second Edition
ISO 4411	Hydraulic Fluid Power—Valves—Determination of Pressure Differential/Flow Characteristics First Edition
ISO 4422-4	Pipes and Fittings Made of Unplasticized Poly (Vinyl Chloride) (PVC-U) for Water Supply—Specifications–Part 4: Valves and Ancillary Equipment First Edition; Supersedes ISO 4422: 1990
ISO 5208	Industrial Valves—Pressure Testing of Valves Second Edition
ISO 5209	General Purpose Industrial Valves—Marking First Edition
ISO 5210	Industrial Valves—Multi-Turn Valve Actuator Attachments First Edition
ISO 5599-1	Pneumatic Fluid Power—Five-Port Directional Control Valves–Part 1: Mounting Interface Surfaces Without Electrical Connector Second Edition
ISO 5599-2	Pneumatic Fluid Power—Five-Port Directional Control Valves–Part 2: Mounting Interface Surfaces With Optional Electrical Connector First Edition
ISO 5599-3	Pneumatic Fluid Power—Five-Port Directional Control Valves–Part 3: Code System for Communication of Valve Functions First Edition
ISO 5752	Metal Valves for Use in Flanged Pipe Systems—Face-to-Face and Centre-to-Face Dimensions Second Edition
ISO 5781	Hydraulic Fluid Power—Pressure-Control Valves (Excluding Pressure-Relief Valves), Sequences Valves, Unloading Valves, Throttle Valves and Check Valves—Mounting Surfaces First Edition
ISO 5783	Hydraulic Fluid Power—Code for Identification of Valve Mounting Surfaces and Cartridge Valve Cavities Second Edition
ISO 5996	Cast Iron Gate Valves First Edition
ISO 6002	Bolted Bonnet Steel Gate Valves First Edition
ISO 6182-2	Fire Protection—Automatic Sprinkler Systems–Part 2: Requirements and Test Methods for Wet Alarm Valves, Retard Chambers and Water Motor Alarms First Edition

TABLE E10.I3 International Standards and Specifications for Valves *(Continued)*

Numbers	Title
ISO 6182-3	Fire Protection—Automatic Sprinkler Systems–Part 3: Requirements and Test Methods for Dry Pipe Valves First Edition
ISO 6182-4	Fire Protection—Automatic Sprinkler Systems–Part 4: Requirements and Test Methods for Quick-Opening Devices First Edition
ISO 6182-5	Fire-Protection—Automatic Sprinkler Systems–Part 5: Requirements and Test Methods for Deluge Valves First Edition
ISO 6263	Hydraulic Fluid Power—Compensated Flow-Control Valves—Mounting Surfaces Second Edition
ISO 6264	Hydraulic Fluid Power—Pressure-Relief Valves—Mounting Surfaces First Edition
ISO 6403	Hydraulic Fluid Power—Valves Controlling Flow and Pressure-Test Methods First Edition; (Corrected and Reprinted–1989)
ISO 6404	Hydraulic Fluid Power—Servovalves—Test Methods First Edition
ISO 7121	Flanged Steel Ball Valves First Edition
ISO 7244	Air Distribution and Air Diffusion—Aerodynamic Testing of Dampers and Valves First Edition
ISO 7259	Predominantly Key-Operated Cast Iron Gate Valves for Underground Use First Edition
ISO 7349	Thermoplastics Valves—Connection References First Edition
ISO 7368	Hydraulic Fluid Power—Two-Port-Slip-In Cartridge Valves—Cavities First Edition
ISO 7508	Unplasticized Polyvinyl Chloride (PVC-U) Valves for Pipes Under Pressure—Basic Dimensions—Metric Series First Edition
ISO 7714	Agricultural Irrigation Equipment—Volumetric Valves—General Requirements and Test Methods Second Edition
ISO 7790	Hydraulic Fluid Power Four-Port Modular Stack Valves and Four-Port Directional Control Valves, Sizes 03 and 05—Clamping Dimensions First Edition
ISO 7967-3	Reciprocating Internal Combustion Engines—Vocabulary of Components and Systems–Part 3: Valves, Camshaft Drive and Actuating Mechanisms First Edition
ISO 8233	Thermoplastics Valves—Torque—Test Method First Edition; (Corrected and Reprinted–1989)
ISO 8242	Polypropylene (PP) Valves for Pipes Under Pressure—Basic Dimensions—Metric Series First Edition

TABLE E10.I3 International Standards and Specifications for Valves *(Continued)*

Numbers	Title
ISO 8659	Thermoplastic Valves—Fatigue Strength—Test Method First Edition
ISO 9393-1	Thermoplastic Valves—Pressure Test Methods and Requirements–Part 1: General First Edition
ISO 9393-2	Thermoplastic Valves—Pressure Test Methods and Requirements–Part 2: Test Conditions and Basic Requirements for PE, PP, PVC-U and PVDF Valves First Edition
ISO 9635	Irrigation Equipment—Hydraulically Operated Irrigation Valves First Edition
ISO 9644	Agricultural Irrigation Equipment—Pressure Losses in Irrigation Valves—Test Method First Edition
ISO 9911	Agricultural Irrigation Equipment—Manually Operated Small Plastic Valves First Edition
ISO 9952	Agricultural Irrigation Equipment—Check Valves First Edition
ISO 10418	Petroleum and Natural Gas Industries—Offshore Production Platforms—Analysis, Design, Installation and Testing of Basic Surface Safety Systems First Edition
ISO 10419	Petroleum and Natural Gas Industries—Drilling and Production Equipment—Installation, Maintenance and Repair of Surface Safety Valves and Underwater Safety Valves Offshore First Edition
ISO 10423	Petroleum and Natural Gas Industries—Drilling and Production Equipment—Specification for Valves, Wellhead and Christmas Tree Equipment First Edition
ISO 10433	Petroleum and Natural Gas Industries—Drilling and Production Equipment—Specification for Wellhead Surface Safety Valves and Underwater Safety Valves for Offshore Service First Edition
ISO 10497	Testing of Valves—Fire Type—Testing Requirements First Edition
ISO 10522	Agricultural Irrigation Equipment—Direct-Acting Pressure—Regulating Valves First Edition
ISO 10631	Metallic Butterfly Valves for General Purposes First Edition
ISO 10931-4	Plastic Piping Systems for Industrial Applications—Poly(Vinylidene Fluoride) (PVDF)–Part 4: Valves First Edition
ISO 10933	Polyethylene (PE) Valves for Gas Distribution Systems First Edition