MANUAL TRANSAXLE ASSY

4107C–01

COMPONENTS

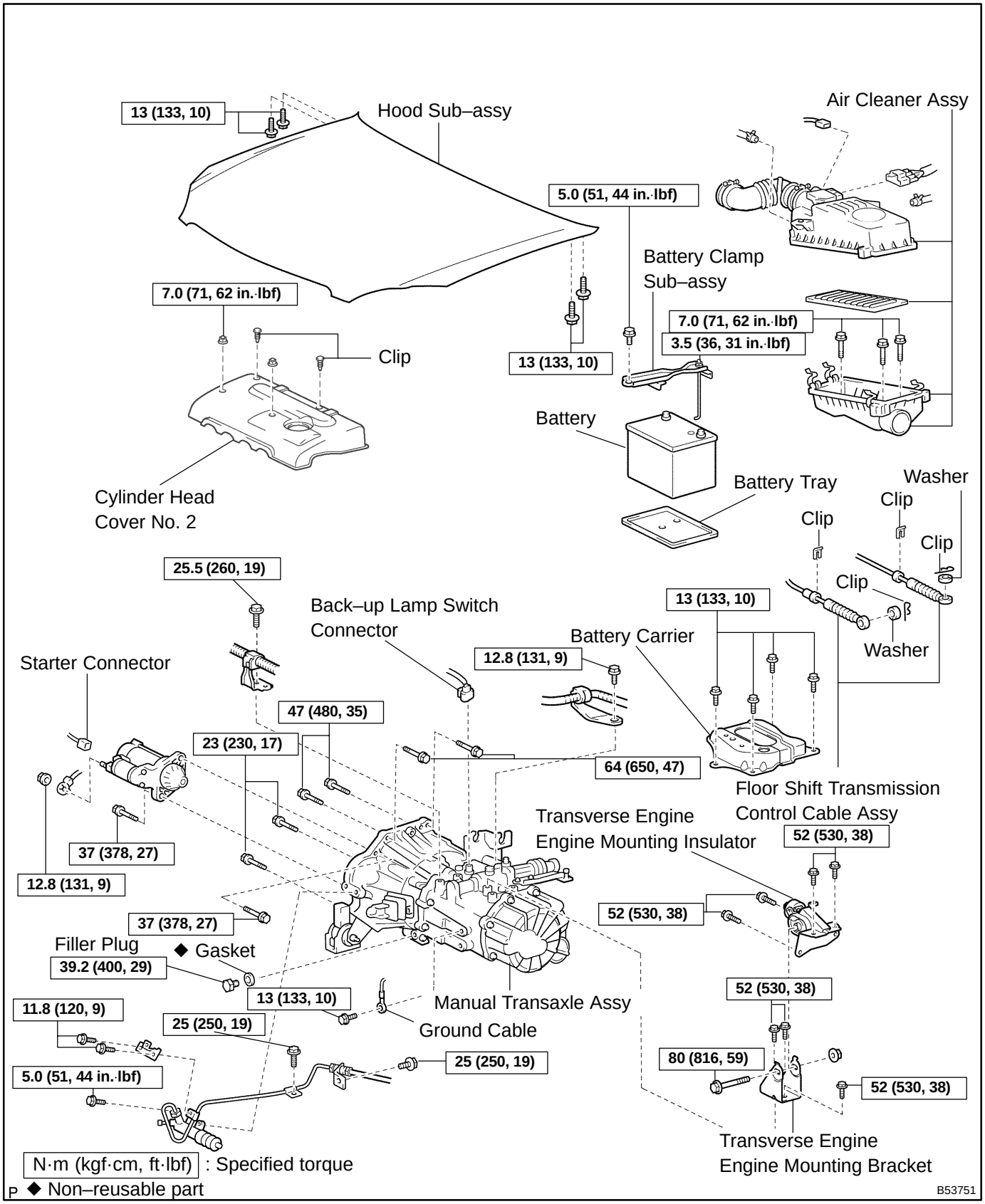

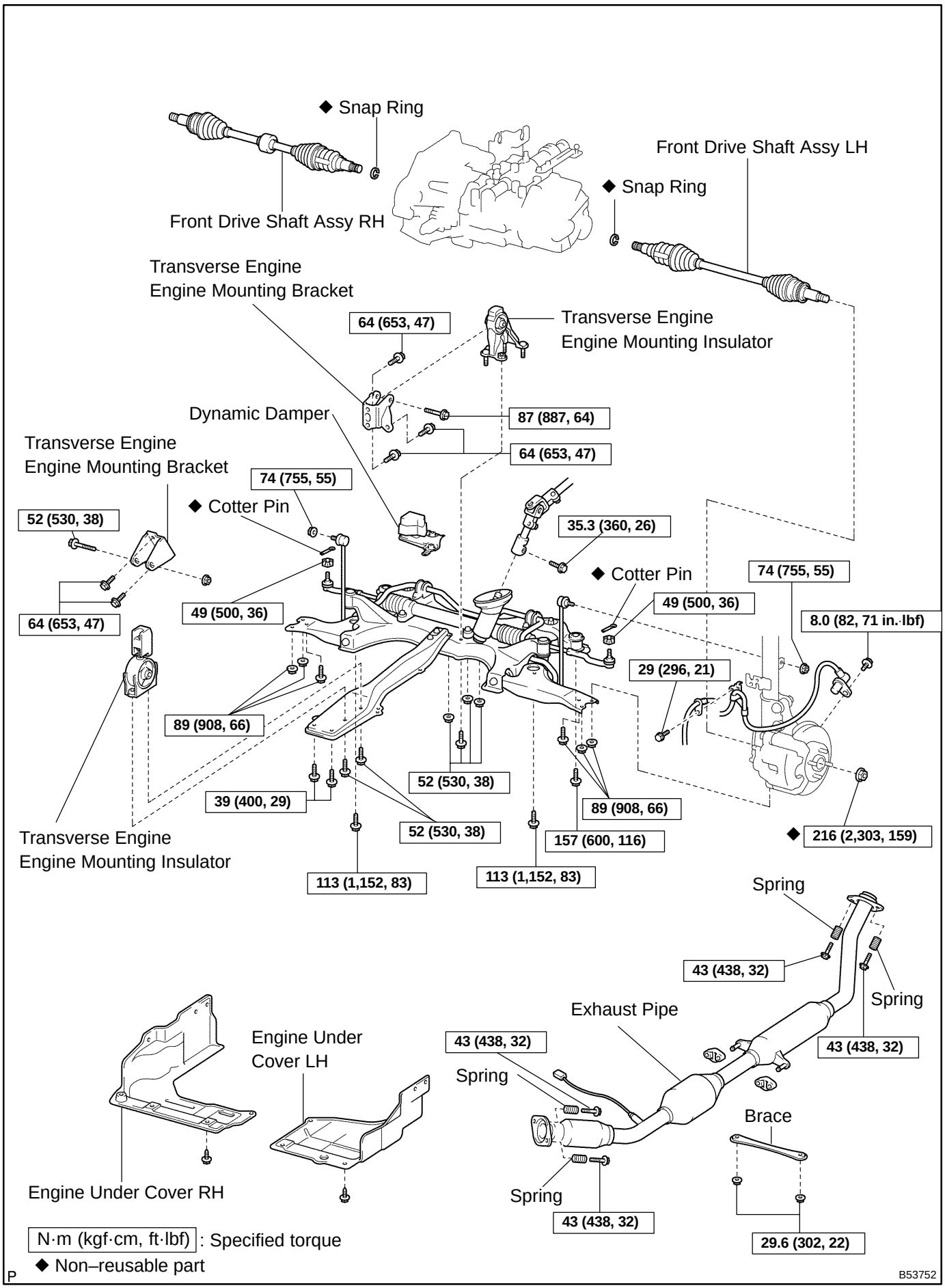
◆ Snap Ring
Front Drive Shaft Assy RH
Front Drive Shaft Assy LH
◆ Snap Ring
Transverse Engine
Engine Mounting Bracket
64 (653, 47)
Transverse Engine
Engine Mounting Insulator
Dynamic Damper
87 (887, 64)
64 (653, 47)
Transverse Engine
Engine Mounting Bracket
74 (755, 55)
◆ Cotter Pin
52 (530, 38)
35.3 (360, 26)
◆ Cotter Pin
74 (755, 55)
49 (500, 36)
49 (500, 36)
64 (653, 47)
8.0 (82, 71 in.·lbf)
29 (296, 21)
89 (908, 66)
52 (530, 38)
39 (400, 29)
89 (908, 66)
52 (530, 38)
157 (600, 116)
◆ 216 (2,303, 159)
Transverse Engine
Engine Mounting Insulator
113 (1,152, 83)
113 (1,152, 83)
Spring
43 (438, 32)
Spring
Exhaust Pipe
Engine Under
Cover LH
43 (438, 32)
43 (438, 32)
Spring
Brace
Engine Under Cover RH
Spring
43 (438, 32)
29.6 (302, 22)
N·m (kgf·cm, ft·lbf) : Specified torque
◆ Non–reusable part
P
B53752