BRAKE MASTER CYLINDER SUB–ASSY (April, 2003)

320ZN–01

COMPONENTS

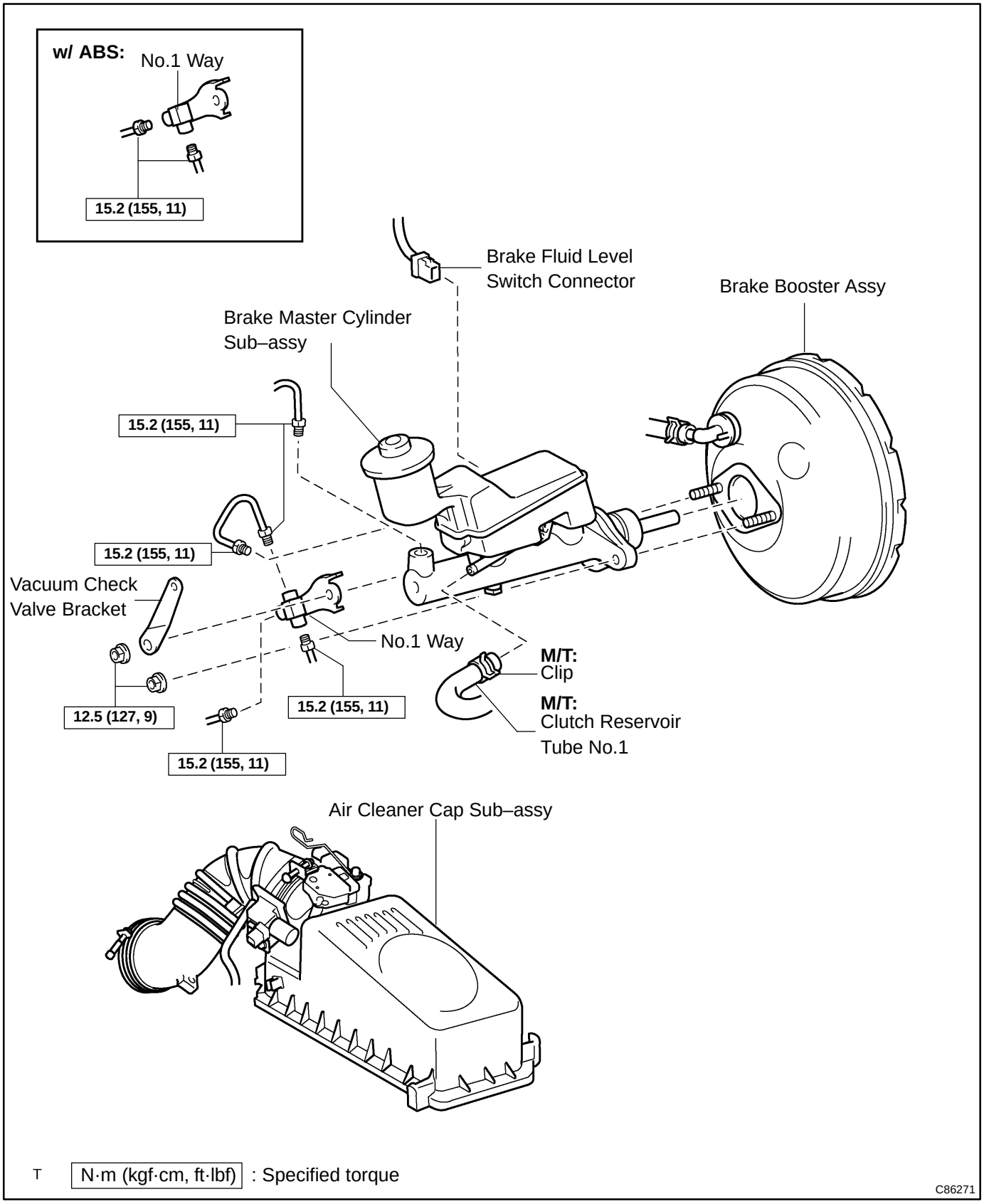

T N·m (kgf·cm, ft·lbf) : Specified torque

C86271

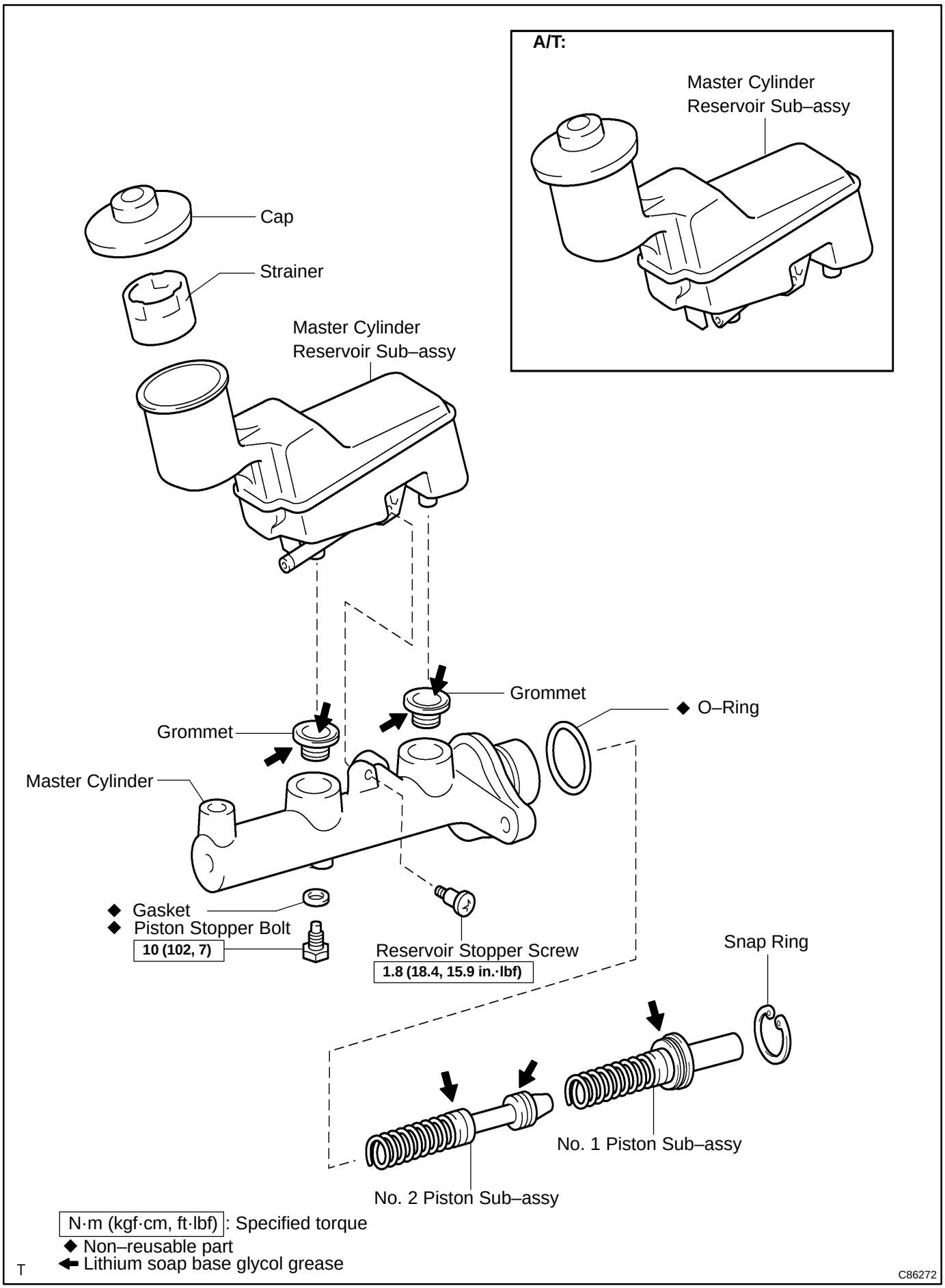
A/T:
Master Cylinder
Reservoir Sub–assy
Cap
Strainer
Master Cylinder
Reservoir Sub–assy
Grommet
◆ O–Ring
Grommet
Master Cylinder
◆ Gasket
◆ Piston Stopper Bolt
10 (102, 7)
Reservoir Stopper Screw
1.8 (18.4, 15.9 in.·lbf)
Snap Ring
No. 1 Piston Sub–assy
No. 2 Piston Sub–assy
N·m (kgf·cm, ft·lbf) : Specified torque
◆ Non–reusable part
Lithium soap base glycol grease
T
C86272