# LINERS FOR SHAPED CHARGES

**Manfred Held**

**Abstract. The penetration potential of shaped charges is proportional to the jet length and the square root of the jet density. The bulk-sound velocities of the liner materials define the maximum possible jet tip velocities. The jet tip velocities and breakup, or particulation, times determine the jet length. For shaped-charge optimisations these parameters have to be considered. After a brief discussion of these issues, this paper outlines the potential of a range of materials for use as possible shaped-charge liners. It is further noted that, as well as the selection of optimal materials, a number of other factors have be taken into account, such as quality of the raw material, homogeneity, and grain-size distribution. Finally, the paper describes the different production possibilities for copper liners, identifying the advantages and disadvantages of each. In particular, the flow-turning process is discussed with its potential for spin compensation.**

## INTRODUCTION

The shaped charge concept remains a mystery. More than 100 years after the discovery of this effect and after more than 50 years of intensive investigation and research in many laboratories in the world, not all the involved phenomena are fully understood. Certainly the fundamental principles are known and many details can be calculated or predicted with empirically adjusted formulas [1]. One example, however, of a shaped-charge phenomenon that is not well understood is the particulation process, which is an essential feature for optimum performance. The enormous ductility of the liner materials during their jet elongation, with their varied appearances during particulation, is strongly correlated with the microscopic crystal structure, which depends on the original material properties and the processes used to produce the liners.

The liner is critical to the penetration potential of shaped charges, which is directly proportional to the square root of the density of the liner material [2]. Penetration is also directly proportional to the maximum length of the jet, which is given by the product of jet-tip velocity and the particulation time. The jet-tip velocity is dictated by the bulk-sound velocity of the liner material. The particulation time, or breakup time, of the jet is given by the ductility of the liner material, which is essentially influenced by the crystal structure [3]. However, it is not clear why the crystal structure of the liner material is so important for the break-up time of shaped-charge jets [4]. At first the liner material is extremely shocked by the detonation pressure of a few hundred kilobars and accelerated. Then the jet is squeezed out in the collapse process from the inward flowing liner mass, again under extreme high pressures. Further the jet is elongating under very high strain rate conditions. It is surprising that the jet is still influenced by the original crystal structure during the particulation processes. Besides the break-up time of the individual particles, their geometry has a strong influence on the performance. If, instead of ductile necking, the particles break under shear failure then the penetration performance can be drastically reduced with increasing stand-off, because the jet particles are tumbling and moving transversely.

The crystal structure also strongly influences the collapse process itself, as demonstrated by the spin compensation of special liners with omnidirectional asymmetries [5]. An excellent summary of shaped-charge liner materials, including the resources of the raw materials, their properties and costs is given by Buc [6].

## JET FORMATION, ELONGATION AND PARTICULATION

The liner material of an axi-symmetric shaped charge is accelerated along the axis of symmetry by the very high pressure of the detonating high explosive charge. In the process of collapsing, the jet is squeezed out with possible tip velocities of 9,000–12,000 m/s, depending on the shaped-charge geometry and liner material, and the slug is formed with velocities of a few 100 m/s. Due to the velocity gradient between the jet tip and the slug, the jet—beginning with a strain rate of $10^4$/sec and later with $10^3$/sec—elongates up to 1,000% or 2,000% longer than the length of the liner (of a good copper material) before it breaks up into the discrete jet particles. We do not currently have a plausible explanation of the incredible strain potential of the different materials during the jet formation and the enormous stretching potential.

The length of the jet, and therefore the late particulation on one hand as a function of the density of the jet, define the theoretical possible penetration depth P. For a particulated jet the following simple equation is valid [2].

$$P = \left(v_{j0} - v_{j,\min}\right) t_P \cdot \sqrt{\rho_j / \rho_t} \qquad (1)$$

The maximum depth of penetration P is given by the velocity difference of jet tip $v_{j0}$ and the cut-off velocity $v_{j,\min}$, the particulation time $t_P$ and the square root of the ratio of the jet density $\rho_j$ to target density $\rho_t$. The maximum jet tip velocities for the different liner materials cannot be increased indefinitely, but are limited by a factor of the bulk-sound velocity of the liner material. The so-called inflow velocity of the liner material has to be smaller than the shock wave velocity of the material under the pressure in the collapse zone. As a first rough rule, the maximum achievable jet tip velocity is 2.34 times the bulk sound velocity of the liner material. The minimum efficient jet velocity or cut-off velocity $v_{j,\min}$ depends essentially on the precision of the jet, that is on the straightness of the jet and on the particulation process. The particulation process produces tumbling and transverse moving particles, which are essentially influenced by the crystal structure of the liner. If the residual jet portions do not hit the entrance hole or touch the narrow crater walls and vaporise, then they are not able to transfer penetration potential into penetration depth. From experience, break-up time itself strongly depends upon the crystal structure of the liner. In spite of a few theoretical papers this field is generally handled empirically. Finer and more uniform crystal structures are preferred for a good particulation process. The depth of penetration is proportional to the square root of the density of the liner material (or of the jet). A few metals with higher densities have corresponding smaller sound velocities, which creates lower jet tip velocities. However, they cannot be simply produced with the same desired fine crystal structure as the copper material, which is therefore more commonly used. Table 1 shows a comparison of liner materials with their densities, bulk-sound velocities, possible maximum jet tip velocities, and a ranking based on the product of possible jet tip velocities and square root of density. These values give at least the theoretical penetration potential of the different liner materials. The table shows clearly that, after the well proven copper, molybdenum and tungsten have particularly good properties for shaped charges.

| **Material** | **Al** | **Ni** | **Cu** | **Mo** | **Ta** | **U** | **W** |
|---|---|---|---|---|---|---|---|
| Density ($g/cm^3$) | 2.7 | 8.8 | 8.9 | 10.0 | 16.6 | 18.5 | 19.4 |
| Bulk sound (km/sec) | 5.4 | 4.4 | 4.3 | 4.9 | 2.4 | 2.5 | 4.0 |
| $v_{j0,max}$ (km/sec) | 12.3 | 10.1 | 9.8 | 11.3 | 5.4 | 5.7 | 9.2 |
| $v_{j0,max} \cdot \sqrt{\rho_j}$ | 20.2 | 30.0 | 29.2 | 35.7 | 22.0 | 22.0 | 40.5 |
| **Ranking** | **7** | **3** | **4** | **2** | **6** | **5** | **1** |

**Table 1. Potential of the different liner materials for shaped charges.**

Crystals have a different resistance in each of the different sliding planes. Therefore the crystal structure of a shaped-charge liner should be as fine as possible in proportion to the wall thickness. The statistical distribution of the crystals orientation allows a uniform flow of the liner elements into the collapse zone. Numerous experiments have shown that fine crystal structures produce longer particulation times, which means greater jet length. The crystal structure of the liner material is generally dependent upon the crystal structure of the raw materials and the production processes of the liner.

## PRODUCTION PROCESSES OF LINERS

In this section the essential production processes of liners are presented and compared with one another. The processes described apply only to copper liners; the manufacturing processes of special liners (such as molybdenum or tungsten) are very specific. Furthermore the latter materials are confined mostly to research and are only occasionally used in practice.

The production of the liners by "machining" from a copper rod is expensive, and the crystal structure from the raw material is not optimal. Generally, in thick rods of for example 100-mm diameter, the crystal structure is not homogeneous and grain sizes are typically large. Therefore the liner does not have the optimum behaviour. As long as the axis of symmetry of the liner is parallel to that of the copper rod, however, some useful jets can be obtained. When the symmetry axis of the rod is not used poor jet particles are observed due to the asymmetries between the crystal structure and the rotational axis of the liner. The most optimal crystal structure requires high production costs and are therefore only used for liners having specific geometries. In practice a more realistic crystal structure is used.

'Deep drawing' is a very inexpensive process especially if a very great number of small liners are produced (Figure 1). In this process a plate is formed in a few steps with a final calibration. However, the surface texture of the original plate is transferred to the liner. Further, the plate material is deformed differently by the stepped drawing in different ring zones, which gives various strains leading to different crystal structures along the liner height. The investment in a press for deep drawing is essential. Also, the development and manufacture of the corresponding tooling for this process are expensive. However, the production costs per unit are very small so that this process is very useful for the production of liners in very large quantities of 100,000 up to many millions for small liners. If a liner with larger base diameter is to be produced, a larger number of steps is necessary which needs intermediate annealing to reduce the strain hardening. Under these circumstances the process has comparable production costs to the flow turning process.

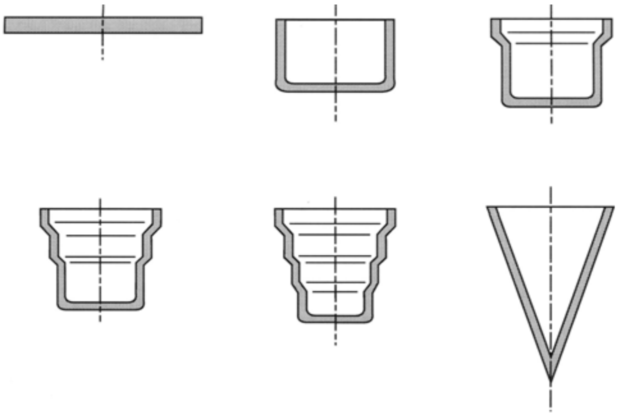

**Figure 1. Liner produced by deep drawing in multiple steps from a plate.**

In a well designed 'flow turning' process the liner is produced in one step (Figure 2). A plate is deformed by a roller against a core. As well as the elongation of the material, a rotational component is introduced by the shear process.

The corresponding shear texture of the liner results in a spin of the jet during the jet formation. Using a plate with corresponding small grain sizes and with smooth surfaces will result in a liner with small grain sizes and with very smooth internal and external surfaces. The plate will be deformed just 50% for a 60° liner. Such a deformation is good for recrystallisation annealing, which yields a new crystal structure of long deformed grains, but they still retain the spin texture from the production process.

In the 'cold forging' process the copper rod (or billet) is transferred to the liner by repeated pressing and annealing to reduce the strain hardening of the crystal structure (Figure 3).

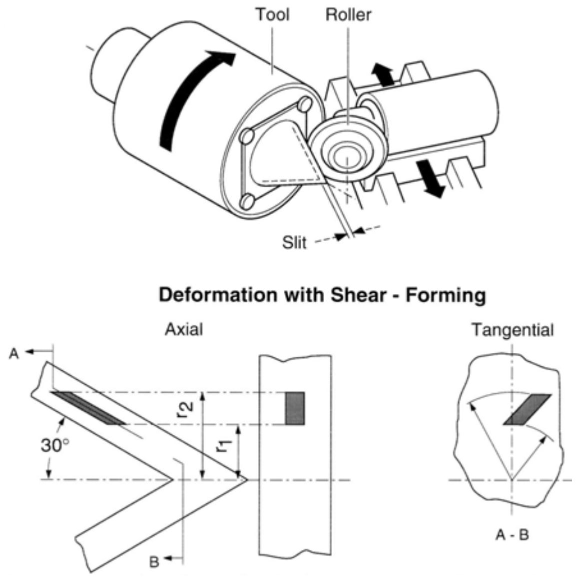

**Figure 2.** **Liner produced by the flow turning or by the shear forming process with distortion of the crystal structures to the liner axis.**

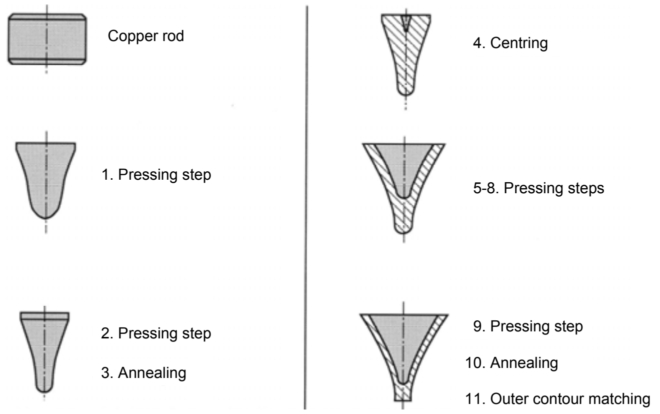

**Figure 3.** **Liner formation by cold forging or Swiss process.**

The internal surface has the quality of the final press. The final wall thickness is achieved by machining the external side. A very fine crystal structure can be achieved in the cold-forged deformed crystal structure by corresponding controlled recrystallisation annealing [7]. The texture is of a high rotational symmetry, if the copper billet originally had a rotational symmetric crystal structure.

The 'warm forging' process with temperatures lower than the recrystallisation temperature of the liner material needs smaller forges or presses and less steps than the production of cold-forged liners (Figure 4) [8]. Therefore a very fine crystal structure is achieved in such liners using suitable original rod material. Up to now this process has been confined to research programs.

Earlier copper liners were also produced by 'hot forging'. The raw material was heated up to 800°C and the desired liner geometry was achieved in one step under a forging press. The oxidised layers of the outer and the inner wall were machined away to achieve the designed wall thickness. This process is of low cost but the desired fine crystal structure of the liner can not be achieved because the temperature during forging is well above the recrystallisation temperature of copper. Therefore this process is no longer used for precision shaped charges.

A special technology is the so-called High-energy Rate Fabrication (HERF) process [9–10]. In this case the original rod is in a special impact machine pressed out with a piston with a velocity in the range of 20 m/s. Also with this process a very fine rotationally symmetric crystal structure is achieved if a suitable raw material is used. Tests with the HERF process produced liners yields with very long jets and particulation times.

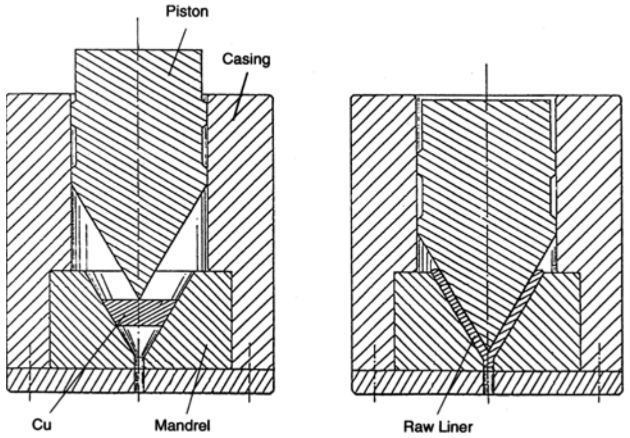

**Figure 4.** **Liner production by warm forging after Lichtenberger [8].**

Rotationally symmetric crystal structures can also be achieved in liners by electroforming copper on a polished mandrel (Figure 5). From a pure galvanic bath liners can be made with thin, but very long crystallites—so-called *dendrits*—which are all oriented to the axis of symmetry. Tests by the author obtained very good shaped-charge jets with 100% necking and very long particulation times. By using inhibitors as additives in the bath to get smooth surfaces, the resultant liners also have small grain sizes, but produce very bad shaped-charge jets with early break-up times and brittle breaking conditions.

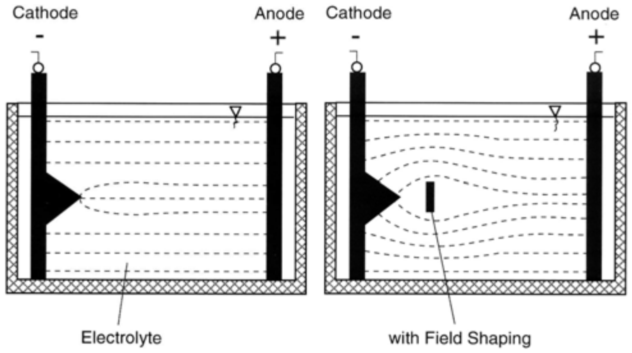

**Figure 5.** **The concentration of the field lines can be avoided by a shaper in a galvanic bath.**

Table 2 summarises the major current production processes with their generally achieved crystal structures, fine or coarse crystals or achieved spin effects, and their production cost relative to the deep-drawing process. Liners machined from a solid block of copper generally have poor grain-size distributions without any spin effect and are relatively expensive. The deep-drawing process gives a crystal structure of medium quality and without any spin effect, and is inexpensive after large initial investments, especially if large quantities of smaller liner diameters are produced. However, for larger diameters or calibres this process is expensive due to the necessary large number of annealing steps between the deep-drawing processes.

Good crystal structure is achieved by the flow turning process (provided good raw material plates with good crystal structure are used). It is the only production process with which spin compensation is achievable with the help of the crystal structure. The production costs for larger liners are relatively low as the liner is produced in ‘one’ process that results in relatively high precision without any mechanical machining time. Cold forging gives a very fine crystal structure using corresponding controlled recrystallisation annealing, but naturally without any spin or spin compensation effects. The production process is much more expensive because of multiple steps of pressing and annealing. The warm-forging process has not yet been used in any production. It gives a very fine crystal structure on experimentally produced liners without any spin effect. It needs much fewer pressing and annealing steps than the cold-firing process. The external surface must be machined similar to the cold-forging process. Hot pressing is no longer used because of the very bad crystal structure that results. Still the production costs would be low. The HERF-method is a research investigation and its economy must be proven. With suitable baths the electroplating process gives very good rotationally symmetric crystal structures that can have, in the experience of the author, long elongations with no spin effects. This procedure would certainly be expensive for serial production. A large investment has to be made because one liner takes roughly two to three days to manufacture.

## SPIN COMPENSATED LINERS

The author reported some time ago on the observations of an extremely high spin rate of jet particles from statically detonated shaped charges with flow turned liners [5]. These observations were made using a specially developed optical diagnostic method of shaped charge jets, which the author calls Synchro-streak Technique (SST) [11]. By the parallax-free observation of the jet at two consecutive distances from the base of the liner (in what he calls Double Synchro-streak Technique) he has shown, for flow-turned liners, that the non-rotational symmetrically formed jet particles are spinning with very high rates along their axis. The marked particle in Figure 6 (lower right picture) has a velocity of 5,400 m/μs and takes 18.5 μs from the first observation at 1,000 mm distance (upper record of the lower right picture) to the second observation at 1,100 mm distance (lower record of the right lower picture).

| **Process** | **Crystal Structure** | **Costs Relative to Deep Drawing** |
|---|---|---|
| Machining from rods | Bad | 10 |
| Deep drawing | Medium | 1 |
| Flow turning* | Good | 1.3 |
| Cold forging | Very good | 5 |
| Warm forging | Very good | 3 |
| Hot forging | Bad | 0.5 |
| HERF | Very good | 5 |
| Electroplating | (Very good) | 30 |

*very good for spin compensation

**Table 2. Resultant crystalline structure and costs of the various liner-formation processes relative to deep drawing.**

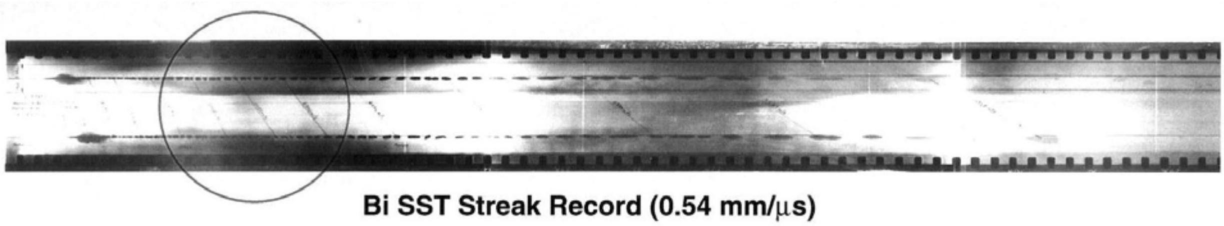

Bi SST Streak Record (0.54 mm/μs)

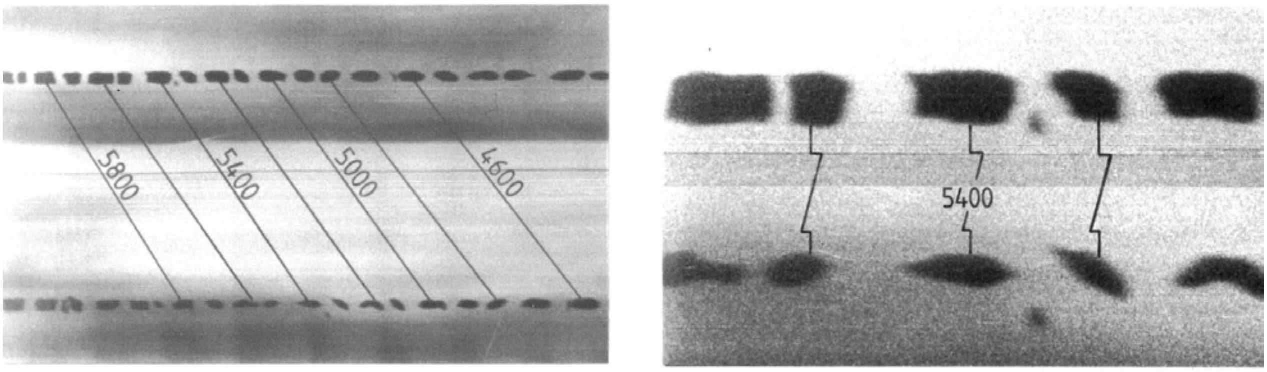

Magnified Section

Compatible Particles

**Figure 6. Double synchro-streak record of the jet with rotations of 810,000 rpm from a flow-turned liner, statically fired.**

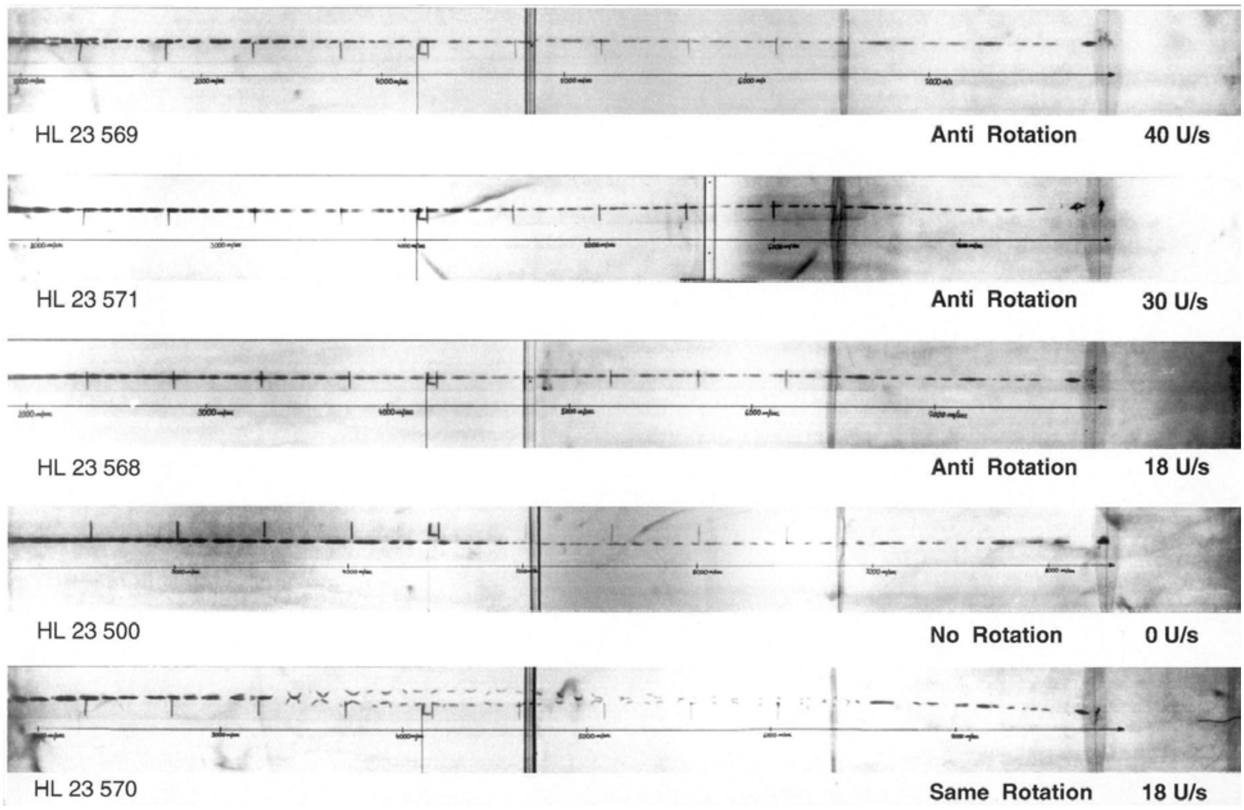

**Figure 7. Flash X-ray pictures of the particulised jets from flow turned liners which are fired under different rotation rates of the shaped charge. Longer particles or longer particulation times are observed by a counter rotation of 18 rps to the liner production. At 40 rps counter rotation an earlier break up time is observed. With the same rotation of 18 rps as the liner is produced a strongly bifurcated jet is observed.**

Under the assumption that this particle has just rotated 90°, the rotation period would be 74 µs (4 x 18.5 µs), giving a rotational speed of 13,500 rps or 810,000 rpm. The assumption of exactly 90° rotation on this streak record is certainly not evident. But if one assumes that the angle of rotation of the observed particle is only 45° the angular velocity is reduced by a factor of two and the spin rate would be still extremely high. If the jet particles from the first to the second observation plane, at 1,000 mm and 1,100 mm distances respectively from the base of liner are compared, it can be observed that the front part the jet looks like a band that is winding through the observation planes. The residual jet portion, however, has fish-shaped particles with very ductile necking. The influence of an external spin to the jets of shaped charges and their particulation processes can be seen from flash X-ray pictures (Figure 7).

The most elongated particles with the largest particulation times can be analysed, if the charge was fired with 18 rps against the rotational direction of the spin formed liners. If the shaped charge is spun up to 30 rps or even 40 rps and fired, then an earlier particulation time is evident along the entire jet length. Even at a static firing—without any rotation—an earlier particulation time can be analysed. If the shaped charge is fired with spin in the same direction as the liner is produced (exactly at 18 rps) then the jet is split or multi-befruncated in the middle velocity range, and will not give large penetrations.

The observed spin rate of the individual jet particles in the DSST-records or bifurcated jets at the FXR-pictures can be simply explained. The crystal structure of the liner is oriented oblique to the liner axis by the flow-turning production process. Following detonation, the acceleration of the individual liner elements in one ring zone have their preferred crystal sliding lines deviating slightly from the rotational axis. Therefore these elements are not totally compensated in the radial direction, which leads to the high spin rate of the particles (Figure 8).

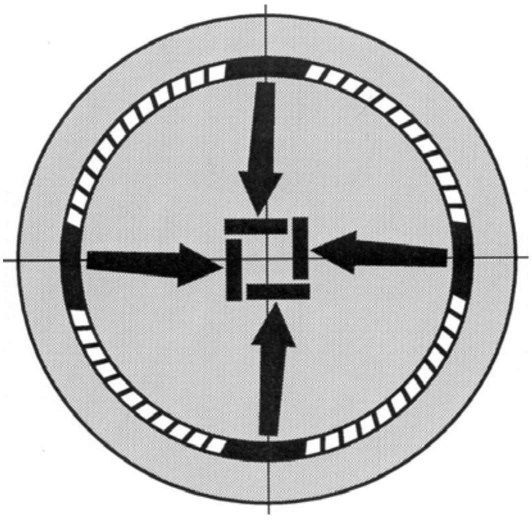

**Figure 8. The spin of a jet has its origin of the not symmetric inflow of the liner elements to the collapse process.**

The twisted crystal structure that is introduced in the liner during the shear forming is also visible macroscopically, if diagonal lines are first marked on the plate (Figure 9).

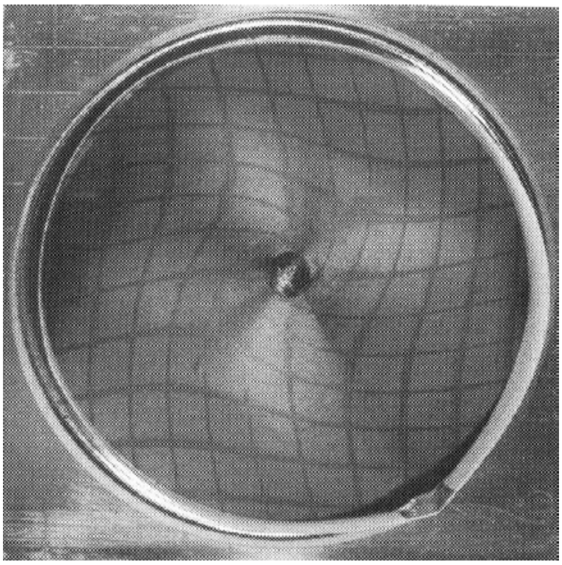

**Figure 9. Diagonal lines are twisted by the flow-turning process of the liners from a plate.**

These diagonal lines show an increasing twist starting from the base. So the shear strain is increasing from the base to the tip of the liner.

## JET AND MICROSCOPE

The influence of the crystal structure of shaped-charge liners on the jet-building processes demonstrates the ultra-high sensitivity of the jet formation to very small deviations in the rotational symmetry of shaped-charge components The enormous amplification of small defects during the collapse process and subsequent jet formation, and their observations in large stand-offs with the synchro-streak technique, can be compared with the objective or first lens of a microscope [12] (Figure 10).

The further magnification of such records from a 35-mm film and the digitised analysis, corresponds to the ocular of a microscope. It is surely often astonishing that the jet of a shaped charge shows effects that are not observable or measurable on its own. One clear example is the crystal structure of the liner that leads to the spin effect. The very small deviations of the liner elements in one ring zone to the rotational axis of symmetry yield the symmetrical cylinder ring in the collapse zone. The absolute values are extremely small and are not observable on their own. The enormous lever arm from the collapse process to the observation plane gives the opportunity to observe such effects. In other words, the shaped-charge jet with increased stand-off is its own most sensitive diagnostic instrument for showing such very small deviations, including special crystal effects.

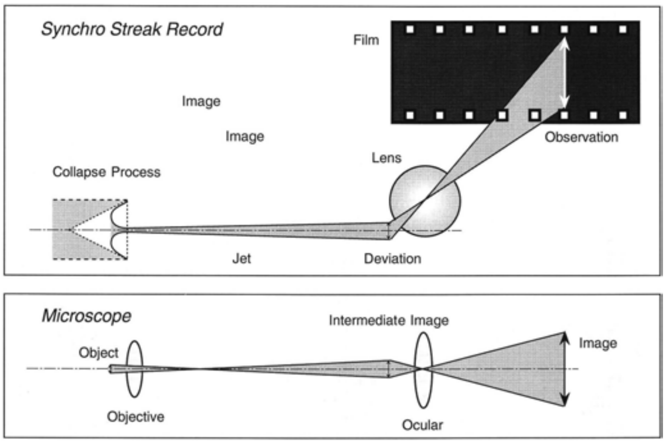

**Figure 10. The observation of the jet is a sensitive diagnostic tool at a larger stand-off, where can be observed very fine asymmetries, also of the crystal structure. Trinks [11] has compared this with the function of a microscope.**

## REFERENCES

[1] W. Walter and J. Zukas, *Fundamentals of Shaped Charges*, 2. Softcover Edition ISBN 0-471-62172-2, 1998.

[2] M. Held, “Hydrodynamic Theory of Shaped Charge Jet Penetration”, *Journal of Explosive and Propellants*, Vol. 7, pp. 9-24, 1991.

[3] M. Held, “Particulation of Shaped Charge Jets”, 11th International Symposium on Ballistics, Brussels, Belgium, WM 1, pp. 1-10, 1989.

[4] A. Doig, “Some Metallurgical Aspects of Shaped Charge Liners”, *Journal of Battlefield Technology*, Vol. 1, No. 1, pp. 1–3, 1998.

[5] M. Held, “Spinning Jets from Shaped Charges with Flow Turned Liners”, *12th International Symposium on Ballistics*, San Antonio, USA, Vol. III, pp. 1–7, 1990.

[6] S. Buc, “Shaped Charge Liner Materials: Resources, Processes, Properties, Costs and Applications”, SPC 91, pp. 282-2, 1991.

[7] A. Lichtenberger and L Zernow, “Increase of Jet Ductility with Cold Pressed Liners and Recovery of Jet Fragments”, *14th International Symposium on Ballistics*, Quebec, Canada, pp. 26–29, 1993.

[8] A. Lichtenberger, “Process for the Elaboration of Shaped Charge Liner”, French Patent No 8608377, 1983.

[9] E. Baker, G. Voorshis, R. Campbell and C. Choi, “Development of Molybdenum Shaped Charge Liners Producing High Ductility Jets”, *14th International Symposium on Ballistics*, Quebek, Canada, Volume 2, WM, 15, pp. 137–143, 1993.

[10] E. Baker, G. Voorhis, T. Vuong and J. Orosz, “HERF Tungsten Lined Shaped Charges”, *Vth European Anti-Armour Symposium*, Shrivenham, 1996.

[11] M. Held, “Tri OSST”, *23rd International Congress on High Speed Photography and Photonics*, Moscow, Russia, Vol. 3615, pp. 282–289, 1998.

[12] W. Trinks, private discussion, 1976.

*Prof Dr Manfred Held is with TDW, Schrobenhausen, Germany. He can be contacted on Tel: +49-8252-996-345, Fax: +49-252-996-126, E-mail: manfred.held@LFK.DASA.de.*

.-.. --- .-- .-. -.--

Cranfield UNIVERSITY

First announcement and call for papers

**GUN TUBES 2002 Conference**

**(GT-2002)**

**15 to 18 September 2002 (venue Keble College, Oxford, England)**

**Conference will cover:**

Modelling of residual stress: swage, hydraulic, shrink fit, composite design and manufacturing cost. Measurement of residual stresses. Loss of residual stress due to heat treatment and firing. Re-yielding, material removal and Bauschinger effect. Heat check/craze cracking, very near bore stresses. Fatigue and fracture toughness. Case studies; lessons from the recent conflicts. Civilian aspects.

**Time Schedule**

30 November 2001 Deadline for abstracts
31 January 2002 Notification of paper acceptance sent out
1 May 2002 Deadline for Manuscripts and final date for registration (we will appreciate registration by this date).

FOR FURTHER INFORMATION PLEASE CONTACT:
**Mrs J G D Price, Short Course Office, Cranfield University, Royal Military College of Science, Shrivenham, Swindon**
**SN6 8LA England**
Tel: +44 (0)1793 785371 Fax: +44 (0)1793 785448, e-mail: J.G.D.Price@rmcs.cranfield.ac.uk
or visit our website: www.rmcs.cranfield.ac.uk/gt2002
Technical queries may be addressed to Dr Amer Hameed: hameed@rmcs.cranfield.ac.uk or
Mr R D Brown: R.D.Brown@rmcs.cranfield.ac.uk

In conjunction with the European Research Office of the US Army; Benét Laboratories - US Army ARDEC; American Society of Mechanical Engineers, Pressure Vessels and Piping Division. Hosted by the Royal Military College of Science

**GUN TUBES 2002 Short Course**

**(GTSC-2002)**

12, 13 September 2002 (venue RMCS, Shrivenham)

This short course, based upon MSc Gun System Design Masters Course will cover background material relevant to the Conference. It will be held on Thursday and Friday preceding the Conference. For further information on this short course please refer to our website given above, or contact Mrs J G D Price at the address above.